Agenda

Regular Meeting of the Governing Body
November 13, 2024 at 5:00 PM
Council Chambers, City Hall
200 Lincoln Avenue

Procedures for Governing Body Meeting

Viewing: Members of the public may view the meeting through the Government Channel on Comcast Channel 28 and Comcast HD928 or may stream the meeting live on the City of Santa Fe's YouTube channel. The YouTube live stream can be accessed from most smartphones, tablets, or computers.

The video recording of this and all past meetings of the Governing Body will also remain available for viewing at any time on the City's YouTube channel. Staff is available to help members of the public access pre-recorded Governing Body meetings online at any time during normal business hours. Please call 955-6521 for assistance.

Radio Broadcast: The meeting can be heard on radio station KSFR 101.1.

Live Public Comment: Members of the public may provide public comment in person during Petitions from the Floor, Public Comment, Final Action on Legislation, or Public Hearings.

Virtual Public Comment: To provide public comment during Petitions from the Floor, Public Comment, Final Action on Legislation, or Public Hearings virtually, you must join the Zoom meeting by internet or phone, as follows:

- Internet: Join the Zoom meeting on the internet using a computer, laptop, smartphone, or tablet, use the following link: https://santafenm-gov.zoom.us/j/83569560706.
  Attendees should use the "Raise Hand" function to be recognized by the Mayor to speak at the appropriate time.
- Phone: To join the Zoom meeting using a phone, use the following phone numbers and Webinar ID: US: 1 (346) 248-7799 - Webinar ID: 835 6956 0706. Phone attendees should press *9 to use the "Raise Hand" function to be recognized by the Mayor to speak at the appropriate time.

1. Call to Order

2. Pledge of Allegiance

   a. Councilor Cassutt - ,

3. Salute to the New Mexico Flag

   a. Councilor Lindell - ,

4. Invocation and Rememberances

   a. Councilor Romero-Wirth - ,

5. Roll Call

6. Approval of Agenda

7. Approval of Consent Agenda

8. Presentations

9. Action Items: Consent Agenda

   a. Request for Approval of the October 30, 2024 Regular Governing Body Meeting Minutes. (Geralyn Cardenas, Assistant City Clerk; gfcardenas@santafenm.gov)

      Committee Review:
      Governing Body: 11/13/2024 -

      Committee Review:

   b. Request for Approval of Liquor Hearing Officer's Recommendation to Approve the Request from Zeng, LLC, for the Following: (Geralyn Cardenas; Assistant City Clerk; gfcardenas@santafenm.gov)

      1. Pursuant to §60-6B-10 NMSA 1978, Consideration of a Waiver of the 300 Foot Location Restriction to Allow the Sale of Alcohol at Zeng Chinese Restaurant, 311 Old Santa Fe Trail, Which is Within 300 Feet of San Miguel Chapel, Located at 401 Old Santa Fe Trail.

      2. If the Waiver of the 300 Foot Location Restriction is Granted, Consideration of a Request for a Restaurant A (Beer & Wine) Liquor License with On-Premises Consumption Only, to be Located at Zeng Chinese Restaurant, 311 Old Santa Fe Trail.

      Committee Review:
      Liquor Hearing: 10/28/2024
      Governing Body: 11/13/2024 -

      Committee Review:

   c. Request for Approval of the 2025 Council Committee and Governing Body Meeting Calendar. (Xavier Vigil, Committee and Contracts Coordinator; xivigil@santafenm.gov)

Committee Review:
Public Works and Utilities Committee: 11/04/2024
Quality of Life Committee: 11/06/2024
Finance Committee: 11/12/2024
Governing Body: 11/13/2024 -

Committee Review:

d. Request for Approval of the 2022 FEMA Building Resilient Infrastructure in Communities Sub-award Grant Agreement EMT-2022-BR-001 in the Total Amount of $524,999 from the New Mexico Department of Homeland Security and Emergency Management for the Design of Microgrids for Community Resiliency. (Brian Williams, Office of Emergency Management Director; bgwilliams@santafenm.gov and Regina Wheeler, Public Works Director; rawheeler@santafenm.gov)

1. Request for Approval of a Budget Amendment Resolution (BAR) in the Total Amount of $524,999 to Fund FY25 Expenditures, Grant Revenue, and Required Local Match for the Sub- Recipient Grant Award from FEMA.

Committee Review:
Public Works and Utilities Committee: 11/4/2024
Finance Committee: 11/12/2024
Governing Body: 11/13/2024

- bgwilliams@santafenm.gov, rawheeler@santafenm.gov

Committee Review:
Committee Review:
Public Works and Utilities Committee: 11/4/2024
Finance Committee: 11/12/2024
Governing Body: 11/13/2024

e. Request for Approval of the 2022 FEMA Building Resilient Infrastructure in Communities Sub-Grant Agreement EMT-2022-BR-0002 in the Total Amount of $709,122.47 with the New Mexico Department of Homeland Security and Emergency Management to Design Flood Mitigation Solution at Ashbaugh Park. (Brian Williams, Director Office of Emergency Management; bgwilliams@santafenm.gov)

1. Request for Approval of a Budget Amendment Resolution (BAR) to Budget $506,576.60 in Awarded Grant Funds into Storm Water WIP Design, $168,858.87 in Matching Funds from the Storm Water Utility Service Fee to Storm Water WIP Design, and $33,687 in Grant Funds for Subrecipient Management Costs into Emergency Management Professional Contracts.

Committee Review:
Public Works and Utilities Committee: 11/04/2024

Finance Committee: 11/12/2024
Governing Body: 11/13/2024 -

Committee Review:

f. Request for Approval of a Budget Amendment Resolution (BAR) to Re-Appropriate Unspent FY 24 Budget in the Amount of $175,000 into Professional Services to Engage a Consultant to Compile the Public Infrastructure Development Standards for Chapter 14 Code Revisions. (Jeanne Wolfenbarger P.E., Public Works Complete Streets Engineer, jawolfenbarger@santafenm.gov)

Committee Review:
Public Works and Utilities Committee: 11/04/2024
Finance Committee: 11/12/2024
Governing Body: 11/13/2024 -

Committee Review:

g. Request for Approval of the 2023 Hazard Mitigation Grant Program (HMGP) Sub-Grant Agreement DR-5430-0012-NM in the Total Amount of $364,820.91 with New Mexico Department of Homeland Security and Emergency Management for Storm Water Projects. (Brian Williams, Director Office of Emergency Management; bgwilliams@santafenm.gov)

1. Request for Approval of a FY25 Budget Amendment Resolution (BAR) to Budget $350,961.66 in Awarded Federal Grant Funds to Stormwater WIP Design, $13,859.25 in Awarded Federal Grant Funds for Subrecipient Management Costs into Emergency Management Professional Contracts, and $87,740.41 in Awarded State Grant Funds to Stormwater WIP Design.

Committee Review:
Public Works and Utilities Committee: 11/04/2024
Finance Committee: 11/12/2024
Governing Body: 11/13/2024 -

Committee Review:

h. Request for Approval of Amendment No. 1 to General Service Contract Item #21-0660 with TLC Plumbing to Increase Compensation by $116,000 for a New Total Amount Not to Exceed $657,613.77 for On-Call Repairs and Rehabilitation of the Sewer Collection System. (P. Fred Heerbrandt, P.E., pfheerbrandt@santafenm.gov).

1. Request for Approval of a Budget Amendment Resolution (BAR) in the Total Amount of $116,000 from the Wastewater Management Enterprise Fund into FY25 Repair and Maintenance.

Committee Review:
Public Works and Utilities Committee: 10/21/2024
Finance Committee: 11/12/2024
Governing Body: 11/13/2024 -

Committee Review:

i. Request for Approval of Addendum A to Professional Services Agreement Item #23-0595 with Denovo to Increase the Compensation for Cloud Storage and Maintenance of the City of Santa Fe AS400 data by $1,819,244 for a New Total Amount of $3,196,884.77 and to Extend the Termination Date to June 30, 2027. (Eric Candelaria, ITT Department Director, edcandelaria@santafenm.gov and Larry Worstell, Infrastructure Manager, lfworstell@santafenm.gov)

Committee Review:
Quality of Life Committee: 11/06/2024
Finance Committee: 11/12/2024
Governing Body: 11/13/2024 -

Committee Review:

j. Request for Approval of a New Mexico Department of Finance and Administration General Fund 93100 Capital Appropriation Project Grant 24-I3147 in the Amount of $240,000 to Replace the Santa Fe River Pedestrian Bridge at Shelby Street with a Reversion Date of June 30, 2028. (Scott A. Overlie, Parks and Open Space Project Administrator; saoverlie@santafenm.gov)

1. Request for Approval of a Budget Amendment Resolution (BAR) to Allocate the DFA Funding in the Amount of $240,000 into FY25 Revenue and Parks and Trails CIP WIP Construction.

Committee Review:
Public Works and Utilities Committee: 11/04/2024
Finance Committee: 11/12/2024
Governing Body: 11/13/2024 -

Committee Review:

k. Request for Approval of a New Mexico Department of Finance and Administration General Fund 93100 Capital Appropriation Project Grant 24-I3142 in the Amount of $5,000,000 for Improvements at Fort Marcy Park with a Reversion Date of June 30, 2028. (Scott A. Overlie, Parks and Open Space Project Administrator; saoverlie@santafenm.gov)

1. Request for Approval of a Budget Amendment Resolution (BAR) to Allocate the DFA Funding in the Amount of $5,000,000 into FY25 Parks and Trails CIP Revenue and WIP Construction.

Committee Review:
Public Works and Utilities Committee: 11/04/2024
Finance Committee: 11/12/2024
Governing Body: 11/13/2024 -

Committee Review:

l. Request for Approval of the 2023 Hazard Mitigation Grant Program Sub-Grant Agreement DR-4652-0011-NM in the Total Amount of $163,509.97 with New Mexico Department of Homeland Security and Emergency Management for updating the City of Santa Fe

Hazard Mitigation Plan and Development of a Wildfire Risk Assessment. (Brian Williams, Director Office of Emergency Management; bgwilliams@santafenm.gov)

1. Request for Approval of a Budget Amendment Resolution (BAR) in the Total Amount of $163,509.97 to Budget Awarded Grant Funds to the Office of Emergency Management Professional Contracts.

Committee Review:
Public Works and Utilities Committee: 11/04/2024
Finance Committee: 11/12/2024
Governing Body: 11/13/2024 -

Committee Review:

m. Request for Approval of Amendment No. 1 to Capital Improvement Program Agreement Item #21-0660 with Sub Surface Contracting Inc. to Increase Compensation by $1,500,000 for a New Total Contract Amount of $2,463,475.12 for On-Call Repair, Replacements, Extention, and Rehabilitation of Sewer Collection Systems. (P. Fred Heerbrandt P.E., Engineer Supervisor, pfheerbrandt@santafenm.gov)

1. Request for Approval of a Budget Amendment Resolution (BAR) in the Total Amount of $1,500,000 from the Wastewater Cash Fund to Repair and Maintenance System Equipment and WIP Construction.

Committee Review:
Public Works & Utilities Committee: 11/04/2024
Finance Committee: 11/12/2024
Governing Body: 11/13/2024

-

Committee Review:

n. Request for Approval of Amendment No.1 to Item #23-0578 With Intera Inc. to Increase the Compensation by $229,132.72 for a New Total Contract Amount of $528,621.73 to Provide Regulatory Groundwater Monitoring, Soil Vapor Monitoring and Other Environmental and Engineering Services for Frank Ortiz Park Landfill. (Sandra Gabaldon, Environmental Compliance Specialst, sgabaldon@santafenm.gov)

1. Request for Approval of a Budget Amendment Resolution (BAR) in the Total Amount of $229,132.72 from the Environmental Services Enterprise Fund to Professional Contracts.

Committee Review:
Public Works and Utilities Committee: 11/04/2024
Finance Committee: 11/12/2024
Governing Body: 11/13/2024 -

Committee Review:

o. Request for Approval of Amendment No. 2 to Priority Line Replacement Price Agreement Item #23-0183 with A.A.C. Construction LLC to Increase Compensation by $1,581,875 for

a New Total Contract Amount of $5,041,875.30 Including NMGRT for On-Call Water Line Replacement. (Bill Huey, Engineer, bchuey@santafenm.gov)

1. Request for Approval of a Budget Amendment Resolution (BAR) in the Total Amount of $1,581,875 from the Water Cash Fund to the Water Capital Projects, WIP Construction.

Committee Review:
Public Works and Utilities Committee: 11/04/2024
Finance Committee: 11/12/2024
Governing Body: 11/13/2024 -

Committee Review:

p. Request for Approval of Amendment No. 2 to Priority Line Replacement Price Agreement Item # 21-0484 with Sub Surface Contracting, Inc. to Increase Maximum Compensation by $1,656,807 for a New Total Contract Amount of $6,696,807 Including NMGRT. (Bill Huey, Engineer, bchuey@santafenm.gov)

1. Request for Approval of a Budget Amendment Resolution (BAR) in the Total Amount of $1,656,807 from the Water Cash Fund to Water Capital Project, WIP Construction.

Committee Review:
Public Works and Utilities Committee: 11/04/2024
Finance Committee: 11/12/2024
Governing Body: 11/13/2024 -

Committee Review:

q. Request for Approval of the First Amendment to the Agreement for Conversion of Streetlights Owned by the Public Service Company of New Mexico (PNM) Item #24-0120 with PNM to Increase the Compensation by $480,000 for a New Not to Exceed Amount of $1,050,000 Including NMGRT and to Extend the Term for One Year to Complete the Conversion of Streetlights to LEDs. (Mike Dalmolin, PE, Traffic Operations Engineering Supervisor; mrdalmolin@santafenm.gov)

Committee Review:
Public Works and Utilities Committee: 11/04/2024
Finance Committee: 11/12/2024
Governing Body: 11/13/2024 -

Committee Review:

r. Request for Approval of a Construction Contract with SKE Contractors, LLC for the Rehabilitation of 10,500 Feet of Vitrified Clay Sewer Pipe in the Total Amount of $3,275,028.20 for a Two-Year Term. (P. Fred Heerbrandt, P.E., pfheerbrandt@santafenm.gov)

1. Request for Approval of a Budget Amendment Resolution (BAR) in the Total Amount of $3,275,029 From the WWMD Enterprise Fund to WIP Construction.

Committee Review:
Public Works & Utility Committee: 11/04/2024

Finance Committee: 11/12/2024
Governing Body: 11/13/2024 -

Committee Review:

s. Request for Approval of Amendment No. 2 to Price Agreement Item #21-0378 with Sub Surface Contracting, Inc. to Increase Compensation by $542,187.50 for a New Total Contract Amount of $1,626,562.50 Including NMGRT to Provide Construction Services for City Wide Construction and Repair for the City of Santa Fe. (Bill Huey, Engineer, bchuey@santafenm.gov)

1. Request for Approval of a Budget Amendment Resolution (BAR) in the Total Amount of $542,188 from the Water Cash Fund to Water Capital Projects, WIP Construction.

Committee Reivew:
Public Works and Utilities Committee: 11/4/2024
Finance Committee: 11/12/2024
Governing Body: 11/13/2024 -

Committee Review:

t. CONSIDERATION OF RESOLUTION NO. 2024-_____. (Councilor Michael Garcia)
A Resolution Accepting a Grant from the Transportation Project Fund Program Administered by New Mexico Department of Transportation and Entering into Grant Agreement Control Number HW2LP50060. (Romella Glorioso-Moss, Public Works Project Administrator; rsglorioso-moss@santafenm.gov)

Committee Review:
Public Works and Utilities Committee (Introduced): 11/04/2024
Finance Committee: 11/12/2024
Governing Body: 11/13/2024 -

Committee Review:

u. CONSIDERATION OF RESOLUTION NO. 2024-____. (Mayor Alan Webber)
Establishing the City of Santa Fe's Priorities for Consideration by the New Mexico State Legislature During the 57th Legislature- State of New Mexico – First Session, 2025. (Regina Wheeler, Public Works Director; rawheeler@santafenm.gov, Marci Eannarino, Legislation and Policy Innovation Manager; maeannarino@santafenm.gov, Christine M. Spiers, Legislative Assistant; cmspiers@santafenm.gov)

Committee Review:
Finance Committee (Introduced): 11/12/2024
Governing Body: 11/13/2024

-

Committee Review:

10. Action Items: Discussion Agenda

a. Request for Approval of Contract Amendment No. 1 with the Life Link Item# 23-0700 of

Recovery Funds Subrecipient Contract Increasing the Total Amount to $1,600,000 for Professional Services and Extend the Term to June 30, 2026. (Julie Sanchez, Youth and Family Services Division Director; jjsanchez@santafenm.gov and Kristen Woods, Youth and Family Services Program Manager; krwoods@santafenm.gov)

Committee Review:
Finance Committee: 11/12/2024
Governing Body: 11/13/2024 -

Committee Review:

b. Request for Approval of Amendment No. 3 to the Intergovernmental Services Agreement with North Central New Mexico Economic Development District for Fiscal Agent Services Item #23-0688 to Add 2024 Capital Appropriations to the Agreement. (Regina Wheeler, Public Works Director; rawheeler@santafenm.gov)

Committee Review:
Finance Committee: 11/12/2024
Governing Body: 11/13/2024 -

Committee Review:

c. Request for Approval of an Addendum to a Customer Order with Lumen Technology Government Solutions, Inc. for City Data Networks and Internet Services Fiber Network In the Total Amount of $343,760 Excluding NMGRT for a Term of 36 Months. (Larry Worstell, ITT Infrastructure Manager, lfworstell@santafenm.gov)

Committee Review:
Finance Committee: 11/12/2024
Governing Body: 11/13/2024 -

Committee Review:

11. Matters from the City Manager

12. Matters from the City Attorney

    a. EXECUTIVE SESSION

    In Accordance with the New Mexico Open Meetings Act, NMSA 1978, Section 10-15-1, Subpart (H)(5), Discussion of Bargaining Strategy Preliminary to Collective Bargaining Negotiations with the City's Unions. (Erin K. McSherry, City Attorney: ekmcsherry@santafenm.gov) - ,

13. Executive Session Action Items

14. Matters from the City Clerk

15. Communications from the Governing Body

16. Introduction of Legislation

a. CONSIDERATION OF BILL NO. 2024-12. ADOPTION OF ORDINANCE NO. 2024___. (Councilor Signe Lindell and Councilor Pilar Faulkner)
A Bill Making a Technical Correction; Relocating Subparagraphs A-G of Section 12-1-23.1 of Article I ("Definitions") of Exhibit A, Chapter 24, SFCC 1987, to Section 12-10-1.10 of Article X ("Vehicle Regulations") of the Same Exhibit. (Kyle Hibner, Assistant City Attorney/City Prosecutor; kjhibner@santafenm.gov)

Committee Review:
Governing Body (Introduced): 11/13/2024
Governing Body (Public Comment): 12/11/2024
Quality of Life Committee: 01/08/2025 (Subject to Approval of 2025 Governing Body & Council Committee Calendar)
Finance Committee: 01/27/2025 (Subject to Approval of 2025 Governing Body & Council Committee Calendar)
Governing Body: 01/29/2025 (Subject to Approval of 2025 Governing Body & Council Committee Calendar)
-

Committee Review:

b. CONSIDERATION OF BILL NO. 2024-13. ADOPTION OF ORDINANCE NO. 2024___. (Councilor Signe Lindell and Councilor Pilar Faulkner)
A Bill Amending Schedule A of the Uniform Traffic Ordinance to Increase Penalties for Muffler Noise Violations, Eliminate a Distinction Between the Categories "Second Offense" and "Subsequent Violations", Recognizing Community Service is an Alternative to All Traffic Violation Penalties Under the City's General Penalty, and Establish an Effective Date. (Kyle Hibner, Assistant City Attorney/City Prosecutor; kjhibner@santafenm.gov)

Committee Review:
Governing Body (Introduced): 11/13/2024
Governing Body (Public Comment): 12/11/2024
Quality of Life Committee: 01/08/2025 (Subject to Approval of 2025 Governing Body & Council Committee Calendar)
Finance Committee: 01/27/2025 (Subject to Approval of 2025 Governing Body & Council Committee Calendar)
Governing Body: 01/29/2025 (Subject to Approval of 2025 Governing Body & Council Committee Calendar)
-

Committee Review:

c. CONSIDERATION OF RESOLUTION NO. 2024___. (Councilor Amanda Chavez)
A Resolution Assigning Authorized Officers and Agents for Grant Agreement Number SAP 22-G2419-STB for the Plan, Design, and Construction of Improvements on Jemez Road. (Sean Moody, Capital Projects Manager; sxmoody@santafenm.gov)

Committee Review:

Governing Body (Introduced): 11/13/2024
Public Works and Utilities Committee: 11/18/2024
Finance Committee: 12/09/2024
Governing Body: 12/11/2024
-

Committee Review:

17. Petitions from the Floor

18. Public Comment on Bills (First Public Comment, No Action)

    a. CONSIDERATION OF BILL 2024-19. ADOPTION OF ORDINANCE NO. 2024-___. (Mayor Alan Webber)
    A Bill Approving the Sale of City-Owned Buildings, Improvements, and Six Parcels Located at 1600 St. Michael's Drive Within the City and County of Santa Fe, New Mexico, Aspect QOZB,LLC, in Three Phases, for a Total of $5,000,000. (Daniel Hernandez, Metropolitan Redevelopment Agency Director; dahernandez@santafenm.gov)

    Committee Review:
    Governing Body (Introduced): 10/30/2024
    Governing Body (Public Comment): 11/13/2024
    Public Works and Utilities Committee: 11/18/2024
    Quality of Life Committee: 11/20/2024
    Economic Development Advisory Committee: 12/04/2024
    Finance Committee: 12/09/2024
    Governing Body (Public Hearing): 12/11/2024 -

    Committee Review:

    b. CONSIDERATION OF BILL 2024-12. ADOPTION OF ORDINANCE NO. 2024-___. (Councilor Signe Lindell)
    A Bill Amending SFCC 1987, Section 12-3, Pertaining to the Public Display of Fireworks; Recognizing the Fire Department will Apply the International Fire Code to the Public Display of Fireworks; Making Other Terms Consistent with the International Fire Code; and Providing for Governing Body Approval of Public Fireworks Display Permits without Legislation. (Geronimo Griego, Fire Marshal; gggriego@santafenm.gov)

    Committee Review:
    Governing Body (Introduced): 10/30/2024
    Governing Body (Public Comment): 11/13/2024
    Quality of Life Committee: 11/20/2024
    Governing Body: 12/11/2024 -

    Committee Review:

19. Final Action on Legislation (Public Hearing)

20. Public Hearings (Land Use Cases, Appeals and Other Items Required to Have a Public Hearing)

21. Appointments

22. Adjourn

Closed captions are provided for this meeting. Persons with disabilities in need of additional accommodations, contact the City Clerk's office at 505-955-6521, five (5) working days prior to meeting date.

SUMMARY OF ACTION
REGULAR MEETING OF THE GOVERNING BODY
WEDNESDAY, OCTOBER 30, 2024, 5:00 PM
COUNCIL CHAMBERS, CITY HALL
200 LINCOLN AVENUE, SANTA FE, NEW MEXICO

1.	Call To Order	Convened at 5:02 pm	3
2.	Pledge of Allegiance	Councilor Lindell	3
3.	Salute to the NM Flag	Councilor Michael Garcia	3
4.	Invocation and Remembrances	Councilor Faulkner	3
5.	Roll Call	Quorum	3-4
6.	Approval of Agenda	Approved as Amended	4
7.	Approval of Consent Agenda	Approved as Amended	4
8.	Presentations		
	a. NM Voices for Children Rpt.	Heard	5
	b. Guaranteed Income	Heard	5
9.	Action Items: Consent Agenda	Approved	5-8
19.	Final Action On Legislation		
	a. Bill 2024-10	Approved	8-9
10.	Action Items: Discussion Items		
	a. Gen. Services Contract	Approved	
16.	Introduction of Legislation		
	a. Bill 2024-12	Introduced	9-10
	b. Bill 2024-19	Introduced	10
21.	Appointments		
	a. Planning Commission	Approved	10-11
	b. Arch. Review Comm.	Approved	11
	c. Water Conserv. Comm.	Approved	11
	d. Econ. Dev. Adv. Comm.	Approved	11

	e. Arts Commission	Approved		11-12
17.	Petitions From the Floor	Heard	12-14	
10.	Action Items: Discussion Agenda Cont.			
	b. Resolution 2024-_____.	Approved As Amended		14-15
11.	Matters From the City Manager	Heard	15	
	Executive Session Held		15-16	
12.	Matters from the City Attorney	Heard	16	
13.	Executive Session Action Items	None		16
14.	Matters from the City Clerk	Heard	16	
15.	Communications from the GB	Heard	16-17	
18.	Public Comment on Bills			
	a. Bill 2025-16	No public comment		17
	b. Bill 2024-15	No public comment		17
21.	Appointments Continued			
	f. Interim City Manager	Withdrawn		17
	g. Interim City Attorney	Withdrawn		17
	h. City Clerk	Approved		17-18
22.	Adjourn	Adjourned at 12:47 am		18-19

REGULAR MEETING OF THE GOVERNING BODY
WEDNESDAY, OCTOBER 30, 2024, 5:00 PM
COUNCIL CHAMBERS, CITY HALL
200 LINCOLN AVENUE, SANTA FE, NEW MEXICO

1. CALL TO ORDER

The regular meeting of the Governing Body was called to order by Mayor Webber at 5:09 pm, on Wednesday, October 30, 2024, in the Council Chambers, City Hall, 200 Lincoln Avenue, Santa Fe, New Mexico.

2. PLEDGE OF ALLEGIANCE

The Pledge of Allegiance was led by Councilor Lindell.

3. SALUTE TO THE NEW MEXICO FLAG

The salute to the New Mexico Flag was led by Councilor Michael Garcia.

4. INVOCATION AND REMEMBRANCES

The invocation was given by Councilor Romero-Wirth.

A moment of silence and remembrances were given.

5. ROLL CALL

MEMBERS PRESENT
Mayor Alan Webber
Councilor Amanda Chavez, arrived later in the meeting

Councilor Signe Lindell
Councilor Jamie Cassutt
Councilor Alma Castro
Councilor Pilar Faulkner, arrived later in the meeting
Councilor Lee Garcia
Councilor Michael Garcia
Councilor Carol Romero-Wirth

MEMBERS EXCUSED

OTHERS PARTICIPANTS ATTENDING
John Blair, City Manager
Erin McSherry, City Attorney
Geralyn Cardenas, Acting City Clerk, via Zoom
Elizabeth Martin, Stenographer

6. APPROVAL OF AGENDA

Ms. McSherry said under Executive Session, staff is going to present later about the two dispositions of property. Our Governing Body rules provide that the Executive Session goes under the City Attorney on the agenda. She does not want to make a recommendation tonight. Mr Blair has agreed to make the recommendation under his part of the agenda. We will need to Governing Body to vote to act outside the standard.

Mayor Webber said we will need to amend the agenda so that the Executive Session goes under the City Manager.

Councilor Cassutt said given that we may have a robust conversation during the Executive Session, she would like to move item 19 A up to right after item 10 A.

Councilor Romero-Wirth asked to move item 10 B to after Petitions From The Floor.

MOTION A motion was made by Councilor Michael Garcia, seconded by Commissioner Castro, to approve the agenda as amended.

VOTE The motion passed on a roll call vote as follows:

Councilor Cassutt, yes; Councilor Castro, yes; Councilor Michael Garcia, yes; Councilor Lee Garcia, yes; Councilor Lindell, yes; Councilor Romero-Wirth, yes; Mayor Webber, yes.

7. APPROVAL OF CONSENT AGENDA

MOTION A motion was made by Councilor Cassutt, seconded by Councilor Lindell, to approve the consent agenda as amended.

VOTE The motion passed on a roll call vote as follows:

Councilor Cassutt, yes; Councilor Castro, yes; Councilor Michael Garcia, yes; Councilor Lee Garcia, yes; Councilor Lindell, yes; Councilor Romero-Wirth, yes; Mayor Webber, yes.

8. PRESENTATIONS

A. NEW MEXICO VOICES FOR CHILDREN REPORT

Given.

Councilor Faulkner arrived at the meeting at 5:33 pm.

B. GUARANTEED INCOME: A PATHWAY TO DIGNITY AND OPPORTUNITY

Given.

Councilor Chavez arrived at 6:20 pm.

9. ACTION ITEMS: CONSENT AGENDA

A. REQUEST FOR APPROVAL OF THE OCTOBER 9, 2024 REGULAR GOVERNING BODY MEETING MINUTES.

Approved on consent.

B. REQUEST FOR APPROVAL TO AMEND THE 2024 GOVERNING BODY AND COUNCIL COMMITTEE CALENDAR TO REMOVE THE FINANCE COMMITTEE MEETING SCHEDULED ON MONDAY, NOVEMBER 25, 2024, AND TO REMOVE THE GOVERNING BODY MEETING SCHEDULED ON WEDNESDAY, NOVEMBER 27, 2024.

Approved on consent.

C. REQUEST FOR APPROVAL OF LIQUOR HEARING OFFICER'S RECOMMENDATION TO APPROVE THE REQUEST FROM GRUPO

PROMETEO LLC, FOR A RESTAURANT B (BEER, WINE & SPIRITS) LIQUOR LICENSE, TO BE LOCATED AT TERRACOTTA WINE BISTRO LLC, 304 JOHNSON STREET.

Approved on consent.

D. REQUEST FOR APPROVAL OF STATE OF NEW MEXICO DEPARTMENT OF TRANSPORTATION FUND 89200 CAPITAL APPROPRIATIONS PROJECT AGREEMENT IN THE AMOUNT OF $1,170,000 FOR MEDIAN IMPROVEMENTS WITH A REVERSION DATE OF JUNE 30, 2026.

Approved on consent.

E. REQUEST FOR RATIFICATION OF AMENDMENT NO. 1 TO ITEM #23-0577 WITH THE NEW MEXICO DEPARTMENT OF TRANSPORTATION TO EXTEND THE TERM THROUGH SEPTEMBER 30, 2026 FOR THE AGUA FRIA - COTTONWOOD ROUNDABOUT PROJECT.

Approved on consent.

F. REQUEST FOR RATIFICATION OF THE CITY MANAGER'S APPROVAL OF U.S. DEPARTMENT OF TRANSPORTATION FEDERAL AVIATION ADMINISTRATION GRANT # 3-35–0037-065-2024 IN THE AMOUNT OF $6,089,700 FOR THE RECONSTRUCTION OF THE AIRPORT APRON.

Approved on consent.

G. REQUEST FOR APPROVAL OF AMENDMENT NO. 2 TO ITEM #24-0420 TITLE III FEDERAL AND STATE SUB-AWARD #2023-24-60026 WITH NORTH CENTRAL NEW MEXICO ECONOMIC DEVELOPMENT DISTRICT NON-METRO AREA AGENCY ON AGING TO DECREASE THE COMPENSATION BY $2,127.45 FOR A NEW TOTAL CONTRACT AMOUNT OF $773,721.95.

Approved on consent.

H. REQUEST FOR APPROVAL OF A GENERAL SERVICES CONTRACT WITH CTS SOFTWARE FOR TRANSIT DISPATCH MANAGEMENT SOFTWARE IN THE TOTAL AMOUNT OF $1,255,529.17 INCLUDING NMGRT FOR A FIVE YEAR TERM.

Approved on consent.

I. REQUEST FOR APPROVAL OF A PROFESSIONAL SERVICES AGREEMENT WITH SANTA FE WATERSHED ASSOCIATION FOR MANAGEMENT AND ADMINISTRATION OF THE ADOPT-A-RIVER AND ADOPT-AN-ARROYO PROGRAMS IN THE TOTAL AMOUNT OF $260,000 FOR A FOUR YEAR TERM.

Approved on consent.

J. REQUEST FOR APPROVAL OF A PROFESSIONAL SERVICES CONTRACT WITH AQUASIGHT LLC FOR SOFTWARE SERVICES FOR THE PASEO RAEL WASTEWATER RECLAMATION FACILITY IN THE TOTAL AMOUNT OF $350,000 FOR A THREE YEAR TERM.

Approved on consent.

K. REQUEST FOR APPROVAL OF AMENDMENT NO. 1 TO GENERAL SERVICES AGREEMENT ITEM #24-0175 WITH HEI INC. TO CHANGE THE SCOPE FOR ADDITIONAL HARDWARE, INCREASE THE COMPENSATION BY $393.080.51 FOR A NEW TOTAL AMOUNT OF $506,978.62 AND TO EXTEND THE TERMINATION DATE BY ONE YEAR.

Approved on consent.

L. REQUEST FOR THE APPROVAL OF AMENDMENT NO. 1 TO GENERAL SERVICES AGREEMENT ITEM #23-0555 WITH VERMONT SYSTEMS TO INCREASE THE COMPENSATION BY $292,985.25 FOR A NEW TOTAL AMOUNT OF $441,652.90 AND TO EXTEND THE TERM TO SEPTEMBER 13, 2027.

Approved on consent.

M. REQUEST FOR APPROVAL OF PROFESSIONAL SERVICES CONTRACT WITH AON CONSULTING, INC. FOR HEALTH BENEFITS CONSULTING SERVICES IN THE TOTAL AMOUNT OF $379,700 FOR A FOUR YEAR TERM.

Approved on consent.

N. REQUEST FOR APPROVAL OF A BUDGET AMENDMENT RESOLUTION (BAR) IN THE TOTAL AMOUNT OF $6,089,700 TO INCREASE WIP CONSTRUCTION USING U.S. DEPARTMENT OF TRANSPORTATION FEDERAL AVIATION ADMINISTRATION FUNDING FOR THE RECONSTRUCTION OF THE AIRPORT APRON.

Approved on consent.

O. REQUEST FOR APPROVAL OF A BUDGET AMENDMENT RESOLUTION (BAR) IN THE AMOUNT OF $150,000 TO THE CITY MANAGER'S BUDGET TO PROVIDE SALARY AND BENEFITS FOR THE OFFICE OF EQUITY AND INCLUSION DIRECTOR.

Approved on consent.

P. REQUEST FOR APPROVAL OF A BUDGET AMENDMENT RESOLUTION (BAR) IN THE AMOUNT OF $402,612 TO INCREASE WIP DESIGN USING FY25 AVAILABLE BUDGETED AIRPORT REVENUE IN EXCESS OF BUDGETED EXPENDITURES TO FUND MULTIPLE ENGINEERING AND ADMINISTRATIVE TASK ORDERS FROM MOLZEN CORBIN.

Approved on consent.

Q. CONSIDERATION OF RESOLUTION 2024-_____. A RESOLUTION APPROVING AMENDMENT NO. 1 TO A LOCAL GOVERNMENT ROADS FUND PROGRAM COOPERATIVE AGREEMENT FROM THE NEW MEXICO DEPARTMENT OF TRANSPORTATION, IDENTIFIED AS CONTROL NUMBER L500532, AND GRANTING A TIME EXTENSION FOR THE PLANNING, DESIGN, AND CONSTRUCTION OF HENRY LYNCH ROUNDABOUT PROJECT.

Approved on consent.

R. CONSIDERATION OF RESOLUTION 2024-_____. A RESOLUTION DIRECTING THE CITY MANAGER TO DIRECT STAFF TO IDENTIFY AND APPLY FOR FEDERAL AND STATE FUNDING SOURCES FOR WATER, WASTEWATER, AND OTHER WATER RELATED PROJECTS; IDENTIFY A STATE LEGISLATIVE PRIORITY LIST; AND APPROVE THE APPLICTIONS SUBMITTED TO THE NEW MEXICO WATER

TRUST BOARD.

Approved on consent.

19. FINAL ACTION ON LEGISLATION (PUBLIC HEARING)

A. CONSIDERATION OF BILL 2024-10. ADOPTION OF ORDINANCE 2024-_____. A BILL RELATING TO THE CITY OF SANTA FE'S ("CITY'S") OFFICE OF ECONOMIC DEVELOPMENT PLAN ORDINANCE, SECTION 11-11-5 SFCC 1987; REPEALING AND REPLACING ORDINANCE 2023-15, INCLUDING APPROVING A LOCAL ECONOMIC DEVELOPMENT PROJECT PARTICIPATION AGREEMENT BETWEEN THE CITY AND PARTING STONE, INC. FOR DESIGN, DEVELOPMENT, AND CONSTRUCTION OF TENANT IMPROVEMENTS; LEASE PAYMENTS; AND EXPANSION OF A CORPORATE HEADQUARTERS, A LOCAL ECONOMIC DEVELOPMENT PROJECT.

Stephanie Beninato. Hope you have a robust discussion about this. She would like to know more about how it has contributed to our economy.

MOTION A motion was made by Councilor Michael Garcia, seconded by Councilor Faulkner, to approve Bill 2024-10.

VOTE The motion passed on a roll call vote as follows:

Councilor Cassutt, yes; Councilor Castro, yes; Councilor Michael Garcia, yes; Councilor Lee Garcia, yes; Councilor Chavez, yes; Councilor Faulkner, yes; Councilor Lindell, yes; Councilor Romero-Wirth, yes; Mayor Webber, yes.

10. ACTION ITEMS: DISCUSSION AGENDA

A. REQUEST FOR APPROVAL OF GENERAL SERVICES CONTRACT WITH ARDHAM TECHNOLOGIES FOR BROADCOM VMWARE SUBSCRIPTION LICENSES AND SUPPORT IN THE TOTAL AMOUNT OF $499,986.20 THROUGH JUNE 30, 2027.

MOTION A motion was made by Councilor Romero-Wirth, seconded by Councilor Lindell, to approve the request.

VOTE The motion passed on a roll call vote as follows:

Councilor Cassutt, yes; Councilor Castro, yes; Councilor Michael Garcia, yes;

Councilor Lee Garcia, yes; Councilor Chavez, yes; Councilor Faulkner, yes; Councilor Lindell, yes; Councilor Romero-Wirth, yes; Mayor Webber, yes.

MOTION A motion was made by Councilor Romero-Wirth, seconded by Councilor Cassutt, to move to item 16 Introduction of Legislation.

VOTE The motion passed on a roll call vote as follows:

Councilor Cassutt, yes; Councilor Castro, yes; Councilor Michael Garcia, yes; Councilor Lee Garcia, yes; Councilor Chavez, yes; Councilor Faulkner, yes; Councilor Lindell, yes; Councilor Romero-Wirth, yes; Mayor Webber, yes.

16. INTRODUCTION OF LEGISLATION

A. CONSIDERATION OF BILL 2024-12. ADOPTION OF ORDINANCE NO. 2024-_____. A BILL AMENDING SFCC 1987, SECTION 12-3, PERTAINING TO THE PUBLIC DISPLAY OF FIREWORKS; RECOGNIZING THE FIRE DEPARTMENT WILL APPLY THE INTERNATIONAL FIRE CODE TO THE PUBLIC DISPLAY OF FIREWORKS; MAKING OTHER TERMS CONSISTENT WITH THE INTERNATIONAL FIRE CODE; AND PROVIDING FOR GOVERNING BODY APPROVAL OF PUBLIC FIREWORKS DISPLAY PERMITS WITHOUT LEGISLATION.

Introduced.

B. CONSIDERATION OF BILL 2024-19. ADOPTION OF ORDINANCE NO. 2024-_____. A BILL APPROVING THE SALE OF CITY-OWNED BUILDINGS, IMPROVEMENTS, AND SIX PARCELS LOCATED AT 1600 ST. MICHAEL'S DRIVE WITHIN THE AND COUNTY OF SANTA FE, NEW MEXICO, ASPECT QOZB, LLC IN THREE PHASES, FOR A TOTAL OF $5,000,000.

Introduced.

MOTION A motion was made by Councilor Cassutt, seconded by Councilor Faulkner, to move to item 21 A, B, C, D, and E.

VOTE The motion passed on a roll call vote as follows:

Councilor Cassutt, yes; Councilor Castro, yes; Councilor Michael Garcia, yes; Councilor Lee Garcia, yes; Councilor Chavez, yes; Councilor Faulkner, yes; Councilor Lindell, yes; Councilor Romero-Wirth, yes; Mayor Webber, yes.

21. APPOINTMENTS

A. PLANNING COMMISSION

*** PIPER KAPIN - APPOINTMENT AS AT-LARGE MEMBER - TERM ENDING 6/2026.**

MOTION A motion was made by Councilor Lindell, seconded by Councilor Romero-Wirth, to approve the appointment.

VOTE The motion passed on a roll call vote as follows:

Councilor Cassutt, yes; Councilor Castro, yes; Councilor Michael Garcia, yes; Councilor Lee Garcia, yes; Councilor Chavez, yes; Councilor Faulkner, yes; Councilor Lindell, yes; Councilor Romero-Wirth, yes; Mayor Webber, yes.

B. ARCHAEOLOGICAL REVIEW COMMITTEE

***DEREK PIERCE - REAPPOINTMENT - TERM ENDING 6/2026**

MOTION A motion was made by Councilor Cassutt, seconded by Councilor Lindell, to approve the appointment.

VOTE The motion passed on a roll call vote as follows:

Councilor Cassutt, yes; Councilor Castro, yes; Councilor Michael Garcia, yes; Councilor Lee Garcia, yes; Councilor Chavez, yes; Councilor Faulkner, yes; Councilor Lindell, yes; Councilor Romero-Wirth, yes; Mayor Webber, yes.

C. WATER CONSERVATION COMMITTEE

***BILL ROTH - REAPPOINTMENT - TERM ENDING 07/2026**
***AUTUMN LEIKER - REAPPOINTMENT - TERM ENDING 07/2026**
***EVAN RIPLEY - REAPPOINTMENT - TERM ENDING 07/2026**

MOTION A motion was made by Councilor Romero-Wirth, seconded by Councilor Lindell, to approve the appointments.

VOTE The motion passed on a roll call vote as follows:

Councilor Cassutt, yes; Councilor Castro, yes; Councilor Michael Garcia, yes; Councilor Lee Garcia, yes; Councilor Chavez, yes; Councilor Faulkner, yes; Councilor Lindell, yes; Councilor Romero-Wirth, yes; Mayor Webber, yes.

D. ECONOMIC DEVELOPMENT ADVISORY COMMITTEE

***GEORGE GAMBLE - APPOINTMENT - TERM ENDING 06/2026**

MOTION A motion was made by Councilor Lindell, seconded by Councilor Cassutt, to approve the appointment.

VOTE The motion passed on a roll call vote as follows:

Councilor Cassutt, yes; Councilor Castro, yes; Councilor Michael Garcia, yes; Councilor Lee Garcia, yes; Councilor Chavez, yes; Councilor Faulkner, yes; Councilor Lindell, yes; Councilor Romero-Wirth, yes; Mayor Webber, yes.

E. ARTS COMMISSION

***KARL DUNCAN - APPOINTMENT TO CHAIR - TERM ENDING 10/2026**
***ANTOINETTE VILLAMIL - APPOINTMENT - TERM ENDING 10/2026**
***MARCIA MIKULAK - REAPPOINTMENT - TERM ENDING 10/2025**
***WINOKA YEPA - REAPPOINTMENT - TERM ENDING 10/2025**
***HEIDI MCKINNON - REAPPOINTMENT - TERM ENDING 10/2026**

MOTION A motion was made by Councilor Castro, seconded by Councilor Faulkner, to approve the appointments.

VOTE The motion passed on a roll call vote as follows:

Councilor Cassutt, yes; Councilor Castro, yes; Councilor Michael Garcia, yes; Councilor Lee Garcia, yes; Councilor Chavez, yes; Councilor Faulkner, yes; Councilor Lindell, yes; Councilor Romero-Wirth, yes; Mayor Webber, yes.

MOTION A motion was made by Councilor Cassutt, seconded by Councilor Faulkner, to move to item 17 Petitions From The Floor.

VOTE The motion passed on a roll call vote as follows:

Councilor Cassutt, yes; Councilor Castro, yes; Councilor Michael Garcia, yes; Councilor Lee Garcia, yes; Councilor Chavez, yes; Councilor Faulkner, yes; Councilor Lindell, yes; Councilor Romero-Wirth, yes; Mayor Webber, yes.

17. PETITIONS FROM THE FLOOR

Steven Fox. Mr. Fox spoke to several issues.

Virgil Vigil. Mr. Vigil spoke to moving the Soldiers Monument stating the City does not own it.

Daniel Ortiz. Mr. Ortiz spoke to the equity and diversity problem without equitably applied. Spoke to soldiers monument and statutes. Against study to remove the monument.

Donna Rivera. Ms. Rivera spoke to comprise and sacrifice. Against the movement of the soldiers monument.

Terri Rivera. Ms. Rivera spoke to soldiers monument. Keep on the plaza and rebuild.

Judd Fischel. Mr. Fischel spoke to the feasibility of moving the monument. You can't move it to the cemetery. They won't let you move it there. It will be toppled again. It is controversial.

Jerry Richardson. Mr. Richardson urged the Council to restore the monument on the Plaza without the 4th panel and with an education panel to explain the history.

Valerie Broker. Ms. Broker spoke in support of maintaining and protecting the monument on the Plaza and analysis of the condition of the monument.

Paul Hultin. Mr. Hultin spoke to soldiers monument saying it is time for each member of the Governing Body to step up and vote on the Resolution before you tonight.

Marco Serna. Mr. Serna spoke to obelisk staying on the plaza and remove the 4th plaque. Go to the original Resolution to rebuild it.

Marie Perez. Ms. Perez spoke to monument and recommended real community deliberation and conversation.

Elizabeth West. Ms. West spoke to the monument and four movies that may help in your deliberations. Bell, Origin, Memory and Fancy Dance.

Eli Bransford. Mr. Bransford spoke against moving the soldiers monument.

Anne Wrinkle. Ms. Wrinkle spoke in support of the Resolution.

Ronald Trujillo. Mr. Trujillo asked the Council to stop trying to erase our history.

Terry Rodriguez. Mr. Rodriguez spoke to repairing the monument in a manner used in Japan.

Ronny. Ronny spoke about dangers in Santa Fe and the monument going down and so many Natives killed because of Hispanics.

Ada. Ada spoke to service dog training issues.

Stephanie Beninato. Ms. Beninato spoke about asphalt sidewalks, the monument and supporting the Resolution.

Miguel Gabaldon. Mr. Gabaldon thanked Councilors Cassutt and Chavez, from the Las Casitas Neighborhood for participating in our meeting regarding safety in the park.

Karen Buller. Ms. Buller spoke in a Native American language.

Gregory Ross. Mr. Ross said the complete and utter lawlessness that occurred in the Plaza should not be glorified in any way whatsoever. It was criminal.

10. B. CONSIDERATION OF RESOLUTION 2024-_____. A RESOLUTION DIRECTING THE CITY MANAGER TO INVESTIGATE THE FEASIBILITY OF RELOCATING THE SOLDIERS' MONUMENT TO THE SANTA FE NATIONAL CEMETERY AND RECOGNIZING THE DISTINCT PURPOSES OF THE PLAZA AND THE MONUMENT

MOTION A motion was made by Councilor Romero-Wirth, seconded by Councilor Cassutt, to move Amendment J for approval.

VOTE The motion passed on a roll call vote of 3 no, 6 yes, as follows:

Councilor Cassutt, yes; Councilor Castro, yes; Councilor Michael Garcia, no; Councilor Lee Garcia, no; Councilor Chavez, yes; Councilor Faulkner, no; Councilor Lindell, yes; Councilor Romero-Wirth, yes; Mayor Webber, yes.

MOTION A motion was made by Councilor Romero-Wirth, seconded by Councilor Chavez, to move Amendment G for approval.

VOTE The motion passed on a roll call vote as follows:

Councilor Cassutt, yes; Councilor Castro, yes; Councilor Michael Garcia, yes; Councilor Lee Garcia, yes; Councilor Chavez, yes; Councilor Faulkner, yes; Councilor Lindell, yes; Councilor Romero-Wirth, yes; Mayor Webber, yes.

MOTION A motion was made by Councilor Romero-Wirth, seconded by Councilor Lindell, to move the Amendment presented tonight for approval.

VOTE The motion passed on a roll call vote as follows:

Councilor Cassutt, yes; Councilor Castro, yes; Councilor Michael Garcia, yes; Councilor Lee Garcia, yes; Councilor Chavez, yes; Councilor Faulkner, yes; Councilor Lindell, yes; Councilor Romero-Wirth, yes; Mayor Webber, yes.

MOTION A motion was made by Councilor Romero-Wirth, seconded by Councilor Castro, to pass Resolution 2024-_____ as amended.

VOTE The motion passed on a roll call vote of 4 no, 5 yes, as follows:

Councilor Cassutt, no; Councilor Castro, yes; Councilor Michael Garcia, no; Councilor Lee Garcia, no; Councilor Chavez, yes; Councilor Faulkner, no; Councilor Lindell, yes; Councilor Romero-Wirth, yes; Mayor Webber, yes.

11. MATTERS FROM THE CITY MANAGER

EXECUTIVE SESSION
IN ACCORDANCE WITH THE NEW MEXICO OPEN MEETINGS ACT, NMSA 1978, SECTION 10-15-1, SUBPARTS (H)(2), (7) AND (8), LIMITED PERSONNEL MATTERS, IN PARTICULAR APPOINTMENTS OF ERIN MCSHERRY AS INTERIM CITY MANAGER AND MARCOS MARTINEZ AS INTERIM CITY ATTORNEY; ATTORNEY-CLIENT PRIVILEGED DISCUSSION OF PENDING AND THREATENED LITIGATION, INCLUDING, BUT NOT LIMITED TO, A QUARTERLY LITIGATION UPDATE AND THREATENED LITIGATION BY THE EDUCATION RETIREMENT BOARD REGARDING THE CITY'S CONTRACT FOR WATER SERVICE AT 5211 LAS SOLERAS DRIVE; AND DISPOSITION OF CITY PROPERTIES LOCAT4ED ON WEST ALAMEDA, IN PARTICULAR, A 0.25 ACRE PARCEL AT 1522 WEST ALAMEDA AND A 1.85 ACRE PARCEL IDENTIFIED AS APN 99308146, FURTHER WEST ON WEST ALAMEDA.

Mr. Blair recommended entering into Executive Session to address limited personnel matters.

Ms. McSherry recommended entering into Executive Session to address a quarterly litigation update and threatened litigation by the Education Retirement Board.

The items listed to be heard under Subpart (H) (8) were removed from the Executive Session notice and will be heard at a later time.

MOTION A motion was made by Councilor Romero-Wirth, seconded by Councilor Faulkner, to enter into Executive Session in accordance with the New Mexico Open Meetings Act, NMSA 1978, Section 10-15-1, Subparts (H) (2) and)7).

VOTE The motion passed on a roll call vote as follows:

Councilor Cassutt, yes; Councilor Castro, yes; Councilor Michael Garcia, yes; Councilor Lee Garcia, yes; Councilor Chavez, yes; Councilor Faulkner, yes; Councilor Lindell, yes; Councilor Romero-Wirth, yes; Mayor Webber, yes.

The Governing Body entered into Executive Session at 9:51 pm.

MOTION A motion was made by Councilor Romero-Wirth, seconded by Councilor Faulkner, to reconvene in open session.

VOTE The motion passed on a roll call vote as follows:

Councilor Cassutt, yes; Councilor Castro, yes; Councilor Michael Garcia, yes; Councilor Lee Garcia, yes; Councilor Chavez, yes; Councilor Faulkner, yes; Councilor Lindell, yes; Councilor Romero-Wirth, yes; Mayor Webber, yes.

The Governing Body reconvened in open session at 11:30 pm.

MOTION A motion was made by Councilor Romero-Wirth, seconded by Councilor Faulkner, to suspend th rules to allow the Governing Body to meet past 11:30 pm.

VOTE The motion passed on a roll call vote as follows:

Councilor Cassutt, yes; Councilor Castro, yes; Councilor Michael Garcia, yes; Councilor Lee Garcia, yes; Councilor Chavez, yes; Councilor Faulkner, yes; Councilor Lindell, yes; Councilor Romero-Wirth, yes; Mayor Webber, yes.

MOTION A motion was made by Councilor Romero-Wirth, seconded by Councilor Faulkner, to enter into Executive Session in accordance with the New Mexico Open Meetings Act, NMSA 1978, Section 10-15-1, Subparts (H)(2) and (7).

VOTE The motion passed on a roll call vote as follows:

Councilor Cassutt, yes; Councilor Castro, yes; Councilor Michael Garcia, yes; Councilor Lee Garcia, yes; Councilor Chavez, yes; Councilor Faulkner, yes; Councilor

Lindell, yes; Councilor Romero-Wirth, yes; Mayor Webber, yes.

The Governing Body entered into Executive Session at 11:31 pm.

MOTION A motion was made by Councilor Romero-Wirth, seconded by Councilor Faulkner, to reconvene in open session.

VOTE The motion passed on a roll call vote as follows:

Councilor Cassutt, yes; Councilor Castro, yes; Councilor Michael Garcia, yes; Councilor Lee Garcia, yes; Councilor Chavez, yes; Councilor Faulkner, yes; Councilor Lindell, yes; Councilor Romero-Wirth, yes; Mayor Webber, yes.

The Governing Body reconvened in open session at 12:20 am.

12. MATTERS FROM THE CITY ATTORNEY

Heard.

13. EXECUTIVE SESSION ACTION ITEMS

None.

14. MATTERS FROM THE CITY CLERK

Heard.

15. COMMUNICATIONS FROM THE GOVERNING BODY

Heard.

18. PUBLIC COMMENT ON BILLS (FIRST PUBLIC COMMENT, NO ACTION)

A. CONSIDERATION OF BILL 2024-16. ADOPTION OF ORDINANCE NO. 2024-_____. A BILL RELATED TO ETHICS AND CAMPAIGN REVIEW BOARD NOMINATIONS; AMENDING SECTION 6-16.1 OF SFCC 1987 TO REMOVE THE REQUIREMENT THAT THE FIRST JUDICIAL BAR ASSOCIATION SUBMIT A LIST OF EIGHT NOMINEES, FROM WHICH THE FOUR ATTORNEY MEMBERS MUST BE APPOINTED, AND REQUIRING THAT THE CITY CLERK SOLICIT NOMINATIONS FOR BOARD MEMBERS FROM AT LEAST THREE LOCAL SOURCES.

There were no public comments made.

B. CONSIDERATION OF BILL 2024-15. ADOPTION OF ORDINANCE NO. 2024-_____. A BILL GRANTING EZEE FIBER TEXAS, LLC, A NON-EXCLUSIVE FRANCHISE, TO OPERATE A TELECOMMUNICATIONS NETWORK WITHIN THE CITY OF SANTA FE, THE RIGHT TO USE CITY PUBLIC RIGHTS-OF-WAY TO PROVIDE TELECOMMUNICATIONS SERVICES WITHIN THE CITY; AND FIXING THE TERMS AND CONDITIONS THEREOF.

There were no public comments made.

21. APPOINTMENTS (CONTINUED)

F. INTERIM CITY MANAGER

***CONSENT TO APPOINT ERIN MCSHERRY AS INTERIM CITY MANAGER, BEGINNING NOVEMBER 2, 2024.**

Mayor Webber withdrew this appointment.

G. INTERIM CITY ATTORNEY

***CONSENT TO APPOINT MARCOS MARTINEZ AS INTERIM CITY ATTORNEY, BEGINNING NOVEMBER 2, 2024.**

Mayor Webber withdrew this appointment.

H. CITY CLERK

***CONSENT TO APPOINT ANDREA SALAZAR AS CITY CLERK, BEGINNING NOVEMBER 9, 2024.**

MOTION A motion was made by Councilor Romero-Wirth, seconded by Councilor Faulkner, to approve the appointment of City Clerk.

VOTE The motion passed on a roll call vote as follows:

Councilor Cassutt, yes; Councilor Castro, yes; Councilor Michael Garcia, yes; Councilor Lee Garcia, yes; Councilor Chavez, yes; Councilor Faulkner, yes; Councilor Lindell, yes; Councilor Romero-Wirth, yes; Mayor Webber, yes.

22. ADJOURN

There being no further business before the Governing Body, the meeting adjourned at 12:47 am.

Approved By:

_____
Mayor Alan Webber

Attested To By:

_____
Geralyn Cardenas, Interim City Clerk

Respectfully Submitted By:

_____
Elizabeth Martin, Stenographer

CITY OF SANTA FE
LIQUOR LICENSE HEARING OFFICER

Recommended
Findings of Fact and Conclusions of Law

Lic. No./Appl. No.:
Name of Applicant: Zeng LLC
Doing Business As: Zeng Chinese Restaurant
Proposed Location: 311 Old Santa Fe Trail Santa Fe, NM 87501

THIS MATTER came before the Liquor License Hearing Officer for public hearing on **October 28, 2024** at 4:00 PM by video hearing, on the application of **Zeng** (Applicant) for:

> a) Pursuant to §60-6B-10 NMSA 1978, consideration of a waiver of the 300-foot location restriction to allow the sale of alcohol at Zeng Chinese Restaurant, 311 Old Santa Fe Trail, which is within 300 feet of San Miguel Chapel, located at 401 Old Santa Fe Trail.
> b) If the waiver of the 300 foot location restriction is granted, consideration of a request for a Restaurant A (Beer & Wine) Liquor License with On-Premises Consumption Only, to be located at Zeng Chinese Restaurant, 311 Old Santa Fe Trail.

The Hearing Officer recommends that the Governing Body adopt the following findings of fact and conclusions of law.

After reviewing the record, conducting a public hearing and having provided an opportunity to be heard from city staff, the Applicant and any interested persons, the Hearing Officer hereby proposes that the Governing Body find as follows:

FINDINGS OF FACT

1. Staff submitted a packet containing the following, which was reviewed by the Hearing Officer and relied on in making these findings:

    a. October 25, 2024 memo from Marketing & Special Events Coordinator Alexandria Mares
    b. September 16, 2024 letter from New Mexico Regulation and Licensing Department, Alcohol and Gaming Division (NMRLD/AGD) Hearing Officer Charmaine Martinez to the City of Santa Fe granting preliminary approval and forwarding the application to the City for local option district approval or disapproval.

c. NMRLD/AGD Restaurant Liquor License Application for consideration of a Restaurant A (Beer & Wine) Liquor License.
d. June 7, 2024 letter from Stephanie Perea, Land Use Planner, verifying the property is zoned BCD Business-Capitol District and is within the Old Santa Fe Trail Sub-district and lies within the Historic Transition Historic Overlay District.
e. October 21, 2024 letter to San Miguel Chapel courtesy notification of liquor license application.
f. Notices of Public Hearing (*Santa Fe New Mexican*, City of Santa Fe website, letter to Applicant from City Clerk)
g. Applicant supplemental information.
h. Vicinity map
i. Santa Fe Land Development Code Table of Permitted Uses and zoning district map

2. City Clerk staff member Alexandria Mares presented the application.
3. Applicant was represented by Xi Xian Zeng.
4. Applicant was offered the opportunity to present testimony or evidence.
5. No members of the public appeared to testify.
6. Notice of the Application, including the date, time and place of the hearing, the name and address of the licensee, the action proposed to be taken by the department, the l2024,ion of the licensee's premises and such other information as may be required by the department was published in the *Santa Fe New Mexican*, which is a newspaper of general circulation within the territorial limits of the governing body, on September 27, 2024 and October 4, 2024 and on the City's website.
7. The Application is for a Restaurant A (Beer & Wine) Liquor License to be located at 311 Old Santa Fe Trail, Santa Fe, NM 87501.
8. There is no record of violations.
9. The business is expected to be open daily from 11:00am to 9:00pm.
10. The business is expected to serve 90 customers daily.
11. Traffic is not expected to significantly increase, and the Public Works Director has found that it does not appear that approval will create unacceptable traffic impacts.
12. The proposed location is not expected to cause a substantial change in litter or noise.
13. The proposed location is not within an area where sale of alcoholic beverages is prohibited by the laws of New Mexico.
14. The applicant is in compliance with all Land Use Codes, and issuance or transfer will not be in violation of a zoning or other ordinance of the governing body, once applicant complies with conditions of approval.
15. Issuance or transfer will not be detrimental to the public health, safety or morals of the residents of the local option district.
16. The hearing was recorded and a copy of the recording is made a part of the record.

CONCLUSIONS OF LAW

Under the circumstances and given the evidence and testimony submitted during the hearing, the Hearing Officer CONCLUDES:

1. Notice of the Application was properly given by publication, mail and posting on the website pursuant to Section 60-6B-4(D).
2. The governing body may disapprove a transfer or issuance only if individuals opposing the transfer or issuance provide positive evidence showing that the transfer or issuance would be detrimental to the health, safety or morals of the community. This evidence must be based on authentic, relevant facts related to s specific prospective licensee and specific location. *The Southland Corporation v. Manzagol*, 1994-NMSC-099, 118 N.M. 423
3. The Applicant does not have the burden to prove that the transfer would not be detrimental to the health, safety or morals of the residents of the local option district. *Dick v. City of Portales*, 1994-NMSC-092, 118 N.M. 541.
4. The Application meets the requirements of §60-6B-4(F)(2).

CONDITIONS OF APPROVAL

1. Applicant is required to comply with all City of Santa Fe ordinances.

WHEREFORE, the Liquor License Hearing Officer recommends to the Governing Body that the Application be **APPROVED**.

/s/ Renee Barela-Gutierrez Date: 10/29/2024
Renee Barela-Gutierrez

City of Santa Fe, New Mexico

memo

DATE: October 25, 2024

TO: Renee Barela-Gutierrez, Liquor Hearing Officer

VIA: Geralyn F. Cardenas, Interim City Clerk

FROM: Alexandria Mares, Marketing & Special Events Coordinator AM

ITEM & ISSUE

Request from Zeng, LLC for a Waiver of the 300 Foot Location Restriction, and a Request for a Restaurant A (Beer & Wine) Liquor License with On-Premises Consumption Only.

BACKGROUND AND SUMMARY

The applicant has requested the following:

a) Pursuant to §60-6B-10 NMSA 1978, consideration of a waiver of the 300-foot location restriction to allow the sale of alcohol at Zeng Chinese Restaurant, 311 Old Santa Fe Trail, which is within 300 feet of San Miguel Chapel, located at 401 Old Santa Fe Trail.

b) If the waiver of the 300 foot location restriction is granted, consideration of a request for a Restaurant A (Beer & Wine) Liquor License with On-Premises Consumption Only, to be located at Zeng Chinese Restaurant, 311 Old Santa Fe Trail.

Attached are staff reports regarding litter, noise and traffic. Staff does not anticipate a substantial change in litter and noise, or any unacceptable traffic impacts due to the approval of this request.

Additionally, as a condition of doing business in the city, staff is recommending that it be noted that the applicant is required to comply with all of the city's ordinances.

ACTION REQUESTED

Consideration of the above request

Attachments:
Alcoholic Beverage Control Application
Notice of Public Hearing and Publications
Website Notice of Public Hearing
Applicant's Proof of Publication
Letter to Applicant
Certified Letter to San Miguel Chapel
Staff Reports

September 16, 2024

Certified Mail No.: 7021 2720 0001 2205 2324

City of Santa Fe
Attn: Alexandria Mares
Community Engagement Dept.
PO Box 909
Santa Fe, NM 87504-0909

Lic. No. /Appl. No.:
Name of Applicant: Zeng, LLC
Doing Business As: Zeng Chinese Restaurant
Proposed Location: 311 Old Santa Fe Trail, Santa Fe, New Mexico 87501

The Director of the Alcoholic Beverage Control Division (ABC) has reviewed the referenced Application and granted **Conditional Preliminary Approval.** It is being forwarded to you for Local Option District approval or disapproval of the Liquor License Application.

Notice of the Public Hearing required by the Liquor Control Act **shall be given by the governing body by publishing a notice** of the date, time, and place of the hearing **twice during the 30 days prior to the hearing** in a newspaper of general circulation within the territorial limits of the governing body. **The first notice must be published at least thirty (30) days before the hearing. Both publications must occur before a hearing can be conducted.** The notice shall include:

(A) Name and address of the Applicant/Licensee;
(B) The action proposed to be taken;
(C) The location of the licensed premises.

In addition, if the Local Option District has a website, **the Notice shall also be published on the website.**

While the law states that "within forty-five **(45)** days after receipt of a Notice from the Alcoholic Beverage Control, the governing body shall hold a Public Hearing in the question of whether the department should approve the proposed issuance or transfer", we recognize the potential for conflict between the requirement for publication of 30 day notice and the 45 day hearing requirement.

With that in mind, when a local governing body receives a liquor license application from ABC, that governing body has a couple of options:

1) Hold a hearing on the license application within the statutory time frame of forty-five (45) days, as required by the Liquor Control Act, and comply with all other statutory and regulatory procedures and notify ABC of your decision within thirty (30) days of the hearing;
2) Request from ABC an extension of time, past the forty-five (45) days, designating how much additional time will be needed to conduct the hearing in compliance with all statutory and

regulatory procedures. After the extension is granted and the hearing is held, notify ABC of your decision within thirty (30) days of the hearing;
ABC has no preference in the option you choose.

The governing body is required to send notice by certified mail to the Applicant of the date, time, and place of the Public Hearing. The governing body may designate a Hearing Officer to conduct the hearing. **A record shall be made** of the hearing.

THE APPLICANT IS SEEKING RESTAURANT A – BEER AND WINE LIQUOR LICENSE WITH ON PREMISES CONSUMPTION ONLY. APPLICANT IS REQUESTING A WAIVER FROM THE CITY OF SANTA FE AS THE NEAREST CHURCH IS WITHIN 300 FEET FROM THE PROPOSED PREMISES

Pursuant to Rule 15.10.32.8 If the proposed licensed premises is within 400 feet of a church or school, and the applicant does not admit the proposed licensed premises is within 300 feet of a church or school, the application must be accompanied by a certified report of a registered engineer or duly licensed surveyor or may obtain a waiver from a local option district governing body for the proposed location. The applicant at this time is seeking a waiver.

Within thirty (30) days after the Public Hearing, the governing body shall notify ABC of their decision to approve or disapprove the issuance or transfer of the license by signing the enclosed original Page 1 of the Application. The original Page 1 of the Application must be returned together with the notices of publication. **If the Governing Body fails to either approve or disapprove the issuance or transfer of the license within thirty days after the Public Hearing, the Director may issue the license.**

If the Governing Body disapproves the issuance or transfer of the license, it shall notify ABC within thirty (30) days setting forth the reasons for the disapproval. A copy of the Minutes of the Public Hearing shall be submitted to ABC with the Notice of Disapproval (*Page 1 of the Application, noting disapproval*).

Respectfully,

Charmaine Martinez
Admin Law Judge | Hearing Officer
NM Regulation & Licensing Department
Alcoholic Beverage Control Division
Phone: (505) 476-4804 Fax: (505) 476-4595
Email: Charmaine.Martinez2@rld.nm.gov

Enclosures:

1. Original Page 1 of the Application (*must be signed and returned w/notices of publication*)
2. Copy of Page 2 of the Application
3. Copy of the Zoning Statement
4. Copy of Floor Plan
5. Copy of Posting Certificate

NMRLD
NEW MEXICO
REGULATION &
LICENSING DEPARTMENT

Received
JUL 08 2024
Alcoholic Beverage Control

STATE OF NEW MEXICO
MICHELLE LUJAN GRISHAM, GOVERNOR
Linda M. Trujillo, Superintendent
Andrew Vallejos, Director

Restaurant Liquor License Application | $200.00 Application Fee, non-refundable

ABC USE ONLY: Application Fee $200.00 Received on: _____ Receipt No. _____
License Fee $ 200- Received on: 7/8/24 Receipt No. _____

Application Number: _____ Local Option District: _____

TYPE of APPLICATION: *Check appropriate box*

☑ Restaurant A | Beer & Wine only | License Fee, pro-rated, due at final: $1,050.00
☐ Restaurant B | Beer, Wine & Spirits | License Fee, pro-rated, due at final: $10,000.00

Applicant is: ☐ Individual ☑ Limited Liability Company ☐ Corporation ☐ Partnership (General/Limited)

Applicant /Company Name: **ZENG LLC**

D/B/A Name: **ZENG ~~CHINESS~~** Chinese **RESTAURANT**

Email: (required) **LIANG8808@YAHOO.COM** Business Phone No: **505-228-9619**

Mailing Address: **311 OLD SANTA FE TRAIL** Santa Fe NM 87501

Physical location, if different: Same
(Include Street number / Hwy number / State Road, City, State, and Zip Code)

County: Santa Fe

Are alcoholic beverages currently being dispensed at the proposed location? ☐ Yes ☑ No If Yes, License # / Type: _____

As defined in §60-3A-3. V. "Restaurant", *means an establishment having a New Mexico resident as a proprietor or manager ... as a place where food is prepared and served primarily for on-premises consumption to the general public in consideration of payment and that has a dining room, a kitchen and the employees necessary for preparing, cooking and serving food; ... does not include establishments as defined in rules promulgated by the director serving only hamburgers, sandwiches, salads and other fast foods;*
I qualify as a "Restaurant"? ☑ Yes ☐ No

Is food service the primary source of revenue and accounts for 60% or more of the total gross receipts at current licensed premises? ☐ Yes ☑ No

Is Food Service Permit current? ☑ Yes, attached ☐ No

I have attached **photos of the Dining Room and Kitchen** and included a **copy of the Menu.** ☑ Yes No

Days and Hours of Operation? **7 DAYS A WEEK**

I understand that a restaurant license requires that the establishment is not a bar-like setting and the hours for sales and/or service of alcoholic beverages are only from 7:00am to 11:00pm or until food sale and service ceases, whichever is earlier? ☑ Yes ☐ No

Contact Person: **JOYCE LIANG** Phone #: **505-228-9619** Email: **LIANG8808@YAHOO.COM**

Application No._____

You must sign before a Notary Public.

I, (print name) **SHIXIN ZENG**, as (Title) **OWNER**
being first duly sworn upon oath deposes and says: that he/she is the applicant or is authorized by the applicant to make this application; that he/she has read the same; knows the contents therein contained are true. Applicant(s) agree(s) that if any statements or representations herein are found to be false, the Director may refuse to issue or renew the license or may cause the license to be revoked at any time.

Signature of Applicant: shi xin zeng Date: **05-28-2024**

Notary Public Use Only: (State of New Mexico, County of Santa Fe)

SUBSCRIBED AND SWORN TO before me this 20th day of June, 2024

By Affiant: Shixin Zeng

Notary Public: [signature]

My Commission Expires on: 09/12/24

SEAL

Official Seal
SUSAN HSU
Notary Public
State of New Mexico
My Commission Expires 9/12/24

Local Option District Use Only:

Local Governing Body of _____ City, County, Town, Village

Public Hearing held on _____ 20____ Decision: ☐Approved ☐Disapproved

Signature of Official: _____ Title: _____

ABC USE ONLY:

☐APPROVED ☐DISAPPROVED, _____

Done this _____ Day of _____, 20____.

SIGNED BY DIRECTOR: _____

ASSIGNED LICENSE NO. _____ **EXPIRES ON:** _____

Reviewed, with copy sent to Licensee via ☐Email, ☐Fax, ☐1st class mail

By: _____ Date: _____

Premises Location, Ownership, and Description | NMSA §60-6B-10 | Page 2

1. The land and building which is proposed to be the licensed premises is: **(check one)**

☐ Owned by Applicant, copy of deed/document attached

☑ Leased by Applicant, copy of lease/document attached

☐ Other (provide details): _____

2. If the land and building are not owned by Applicant, indicate the following:

A. Owner(s): **311 OLD SANTA FE LLC**

B. Date and Term of Lease: **MAY 1 2024, 5 YEARS TERM, 5 YEARS OPTION.**

3. Premises location is Zoned (example C-1, see Zoning Statement): BCD

Zoning Statement attached, ☑ **Yes** ☐ **No** Must be obtained from the Local Government, listing the proposed location by address, Type of Zone, state whether alcoholic beverages are allowed at proposed location, and if applicable, whether packaged sales, patio service and/or manufacturing is allowable. If there is no zoning in the proposed location, attach Statement from the local government, indicating there is no zoning.

4. **Distance* from nearest Church:** (Property line of church to closest point of licensed premises—shortest distance)

Name of Church: **SANMIGUEL CHAPLE** Trail Miles/feet: **524.82 FT**

Address/location of Church: **401 OLD SANTA FE ~~TRL~~ SANTA FE NM 87501**

5. **Distance* from nearest School:** (Property line of school to closest point of licensed premises—shortest distance)

Name of School: **WOOD GOUMLEY ELEMENTARY SCHOOL** Miles/feet: **2007.05 FT**

Address/location of School: **141 E BOOTH ST SANTA FE NM 87505**

6. **Attach Detailed Floor Plan,** must include the Total Square Footage of premises; List nearest cross street; Show which direction is North; Show each level (floor) where alcoholic beverages will be sold or consumed, exterior walls, doors, and interior walls; Patio Area with type of barrier used; Highlight Bonded Areas. The floor plan should be no larger than 8½ x 11 inches and must be labeled with designated areas highlighted, which will reflect the proposed Licensed Premises.

7. Type of Operation: ☐ Hotel ☐ Lounge ☐ Package Grocery ☐ Racetrack

☑ Restaurant ☐ Craft Distiller ☐ Small Brewer ☐ Winery ☐ Wholesaler

☐ Other (specify): _____

***NOTE:** If the distance is beyond 300 feet, but less than 400 feet, and the Applicant does not admit that the location is within 300 feet and requests a waiver from the LOD, a Registered Engineer or Licensed Surveyor must complete a Survey Certificate showing the exact distance.

ALCOHOLIC BEVERAGE CONTROL DIVISION

PO BOX 25101 SANTA FE, NM 87504-5101

POSTING CERTIFICATE

- [x] RESTAURANT A (BEER/WINE ONLY)
- [ ] RESTAURANT B (BEER/WINE/SPIRITS)
- [ ] SMALL BREWER
- [ ] CRAFT DISTILLER
- [ ] GOVERNMENTAL
- [ ] OTHER: _____
- [ ] RETAILER (PACKAGE ONLY)
- [ ] DISPENSER (ON PREMISE ONLY)
- [ ] DISPENSER (FULL SERVICE)
- [ ] INTER-LOCAL DISPENSER
- [ ] CANOPY (DISPENSER-C)
- [ ] LOTTERY

LICENSE NUMBER _____ APPLICATION NUMBER _____

- [ ] TRANSFER OF OWNERSHIP & LOCATION
- [ ] TRANSFER OF OWNERSHIP ONLY
- [ ] TRANSFER OF LOCATION ONLY
- [ ] NEW LICENSE

TRANSFERRED FROM: _____

CURRENT LOCATION: _____

TRANSFERRED TO:/APPLICANT: ZENG, LLC

PROPOSED LOCATION: 311 OLD SANTA FE TRAIL, SANTA FE, NEW MEXICO 87501

PROPOSED BUSINESS NAME: ZENG CHINESE RESTAURANT

I CERTIFY THAT I HAVE POSTED THE REQUIRED NOTICE OF LIQUOR LICENSE PURSUANT TO NMSA §60-6B-2, WHEN LOCATION IS WITHIN 500 FEET, *DISTANCE SHALL BE NOTED IN FEET,* AND FURTHER CERTIFY AS FOLLOWS:

1. LOCATION POSTED IS WITHIN CORPORATE LIMITS OF: SANTA FE
2. LOCATION POSTED IS IN UNINCORPORATED LIMITS OF: _____
3. DISTANCE FROM NEAREST CHURCH IS: 257 FEET - Rolatape
   NAME OF CHURCH IS: San Miguel Church
4. DISTANCE FROM NEAREST SCHOOL IS: .4 miles
   NAME OF SCHOOL IS: Wood-Gormley Elementary School
5. IF RURAL, DISTANCE FROM NEAREST EXISTING LIQUOR LICENSE IS: _____
   BY PASSABLE ROAD: _____ BY STRAIGHT AIRLINE: _____
6. NOTICE POSTED ON:
   - [x] BUILDING
   - [ ] BUILDING UNDER CONSTRUCTION
   - [ ] BUILDING BEING REMODELED
   - [ ] BILLBOARD
   - [ ] NO BUILDING

DATE POSTED: 7/19/24 EXPIRES AT MIDNIGHT ON: 8/8/24

Shi Xing Zeng
APPLICANT SIGNATURE

[signature]
SIU AGENT SIGNATURE

Shi Xing Zeng
PRINT APPLICANT NAME

Annabelle M. Gasca
PRINT AGENT NAME

Revised 8.2021

City of Santa Fe, New Mexico
200 Lincoln Avenue, P.O. Box 909, Santa Fe, N.M. 87504-0909
www.santafenm.gov

Alan Webber, Mayor

Councilors:
Signe I. Lindell, Mayor Pro Tem, District 1
Alma G. Castro, District 1
Michael J. Garcia, District 2
Carol Romero-Wirth, District 2
Lee Garcia, District 3
Pilar F.H. Faulkner, District 3
Jamie Cassutt, District 4
Amanda Chavez, District 4

June 7, 2024

Shixin Zeng
Zeng LLC
DBA Zeng Chinese Restaurant
Santa Fe, New Mexico 87501

RE: Zoning Verification for 311 Old Santa Fe Trail, Santa Fe, NM

Dear Ms. Liang,

This letter provides zoning verification on the above referenced property. According to the Official Zoning Map, this property is zoned BCD Business-Capitol District and is within the Old Santa Fe Trail Sub-district and lies within the Historic Transition Historic Overlay District.

14-4.3 (E) BCD Business-Capitol District

(1) Purpose In recognition of the fact that the economic health of the city depends on the economic viability of the BCD, the purpose of the BCD is to provide for a mixture of land uses, including residential uses, designed to promote the district's economic wellbeing while preserving the unique architecture, townscape and aesthetics that foster a strong tourist industry and sustain the quality of life, sense of community and historical identity in the district and the city.

(3) Townscape Subdistricts

(a) The existing townscape subdistricts include: Alameda Street, Barrio de Analco, Cerrillos Road, Don Gaspar, East Marcy/East Palace, Loretto, Marcy, McKenzie Street, Old Santa Fe Trail, Plaza/San Francisco, Rosario Boulevard/NW Paseo de Peralta, Sandoval/Montezuma, State Capitol and Westside.

(b) The townscape subdistricts are intended to:

(i) preserve the overall aesthetic quality of the BCD;

(ii) maintain diversity among the various subdistricts; and

(iii) protect the unique features, recognizable historic character and other common identifying characteristics of each subdistrict.

(c) Property is eligible for rezoning to a townscape subdistrict if the land is located within or adjacent to the BCD and meets all other requirements of Chapter 14. 14-7.4 - BUSINESS-CAPITOL DISTRICT (1) Standards for Entire District

(B) Additional Regulations

(c) Drive-in or Drive-through Facilities, Drive-in or drive-through facilities are permitted as principal or accessory uses and structures in the Rosario Boulevard/Northwest Paseo de Peralta,

Sandoval/Montezuma and Cerrillos Road Subdistricts, where traffic generated by the use will not substantially interfere with existing vehicular and pedestrian traffic. Drive-in or drive through facilities are prohibited in the other subdistricts of the BCD.

(3) Design Objectives for Individual Townscape Subdistricts The best existing qualities of the individual townscape subdistricts should be preserved, while encouraging diversity of design in the individual townscape subdistricts. New development should be harmonious with the specific physical characteristics and development and design objectives listed below:

(i) Old Santa Fe Trail Subdistrict:

(i) maintain the small scale quality of buildings and streets

(ii) maintain the existing width of the Old Santa Fe Trail

(iii) maintain the scale of building; and (iv) encourage compliance the state in design of future development standards for the Townscape Subdistricts may be found within Santa Fe City Code, Chapter 14, Table 14-7.4(A)-1, and development standards for the Historic Districts may be found within Santa Fe City Code, Chapter 14-5.2.

Full service restaurants which may or may not have patio services, with incidental alcohol service for on-site consumption are permitted uses in the BCD district.

For additional information, please reference City of Santa Fe Chapter 14 SFCC regarding these districts (Chapter 14- 4 – Zoning Districts/14-6 Permitted Uses) https://library.municode.com/nm/santa_fe/codes/code_of_ordinances?nodeId=CH14LADE. All uses are subject to compliance with applicable development standards such as parking, lot coverage, etc.

Note: The information provided in this letter is solely derived from the Official Zoning Map and the minimum requirements set forth in Chapter 14, SFCC 1987. This letter intends to provide advice regarding zoning regulations. It is not the intent to state that the subject property complies with zoning requirements. Occupancy is determined based on zoning compliance at the time of building permit or certificate of occupancy, whichever applies. Additionally, it is not the intent to interfere with or to abrogate or annul any official document including conditions or safeguards made a part of the subject property at the time of any public hearings. Applicants are advised to pursue an independent search of official documents.

If you have any further questions, please contact me at sjperea@santafenm.gov

Stephanie Perea
Land Use Planner City of Santa Fe, New Mexico

FLOOR PLAN – CENTRAL

5,339 + S.F

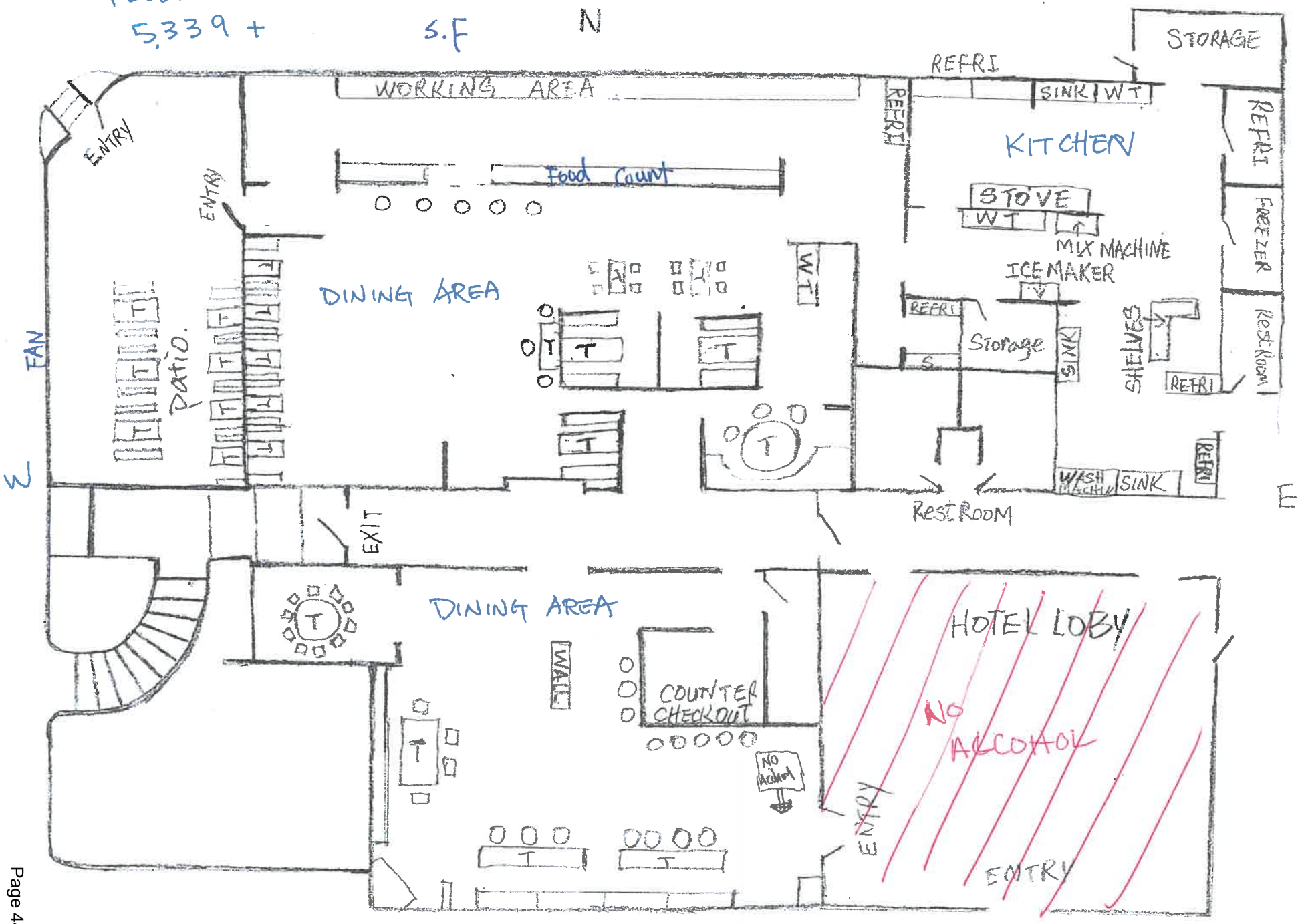

WT – WORKING TABLE.

T – TABLE S – SHELVES

S

CITY OF SANTA FE

NOTICE OF PUBLIC HEARING

Notice is hereby given that the City of Santa Fe Liquor Hearing Officer will hold a public hearing at 4:00 p.m. on Monday, October 28, 2024.

The purpose of this public hearing is to discuss a request from Zeng, LLC, for the following:

a) Pursuant to §60-6B-10 NMSA 1978, consideration of a waiver of the 300 foot location restriction to allow the sale of alcohol at Zeng Chinese Restaurant, 311 Old Santa Fe Trail, which is within 300 feet of San Miguel Chapel, located at 401 Old Santa Fe Trail;

b) If the waiver of the 300 foot location restriction is granted, consideration of a request for a Restaurant A (Beer & Wine) Liquor License with On-Premises Consumption Only, to be located at Zeng Chinese Restaurant, 311 Old Santa Fe Trail

Virtual meeting information will be posted on the City of Santa Fe's Weekly Meeting List at least seventy-two (72) hours before the meeting at santafe.primegov.com/public/portal.

Geralyn F. Cardenas
Interim City Clerk

Received by The Santa Fe New Mexican
Date: September 24, 2024

To Be Published: September 27, 2024
AND
October 4, 2024

By _____
The Santa Fe New Mexican (Signature)

LEGAL #93066

CITY OF SANTA FE

NOTICE OF PUBLIC HEARING

Notice is hereby given that the City of Santa Fe Liquor Hearing Officer will hold a public hearing at 4:00PM on Mon, Oct. 28, 2024.

The purpose of this public hearing is to discuss a request from Zeng, LLC, for the following:

a) Pursuant to §60-6B-10 NMSA 1978, consideration of a waiver of the 300 foot location restriction to allow the sale of alcohol at Zeng Chinese Restaurant, 311 Old Santa Fe Trail, which is within 300 feet of San Miguel Chapel, located at 401 Old Santa Fe Trail.

b) If the waiver of the 300 foot location restriction is granted, consideration of a request for a Restaurant A (Beer & Wine) Liquor License with On-Premises Consumption Only, to be located at Zeng Chinese Restaurant, 311 Old Santa Fe Trail.

Virtual meeting information will be posted on the City of Santa Fe's Weekly Meeting List at least seventy-two (72) hours before the meeting at santafe.primegov.com/public/portal.

Geralyn F. Cardenas Interim City Clerk

PUB: Sept. 27, Oct. 04, 2024.

City of Santa Fe

NOTICE OF LIQUOR LICENSE HEARING
Monday, October 28, 2024 at 4:00 PM

NOTICE IS HEREBY GIVEN that a Liquor License Hearing is scheduled for Monday, October 28, 2024 at 4:00 PM.

Please visit https://santafe.primegov.com/public/portal to view agendas, participation information and corresponding materials.
For additional information, contact the City Clerk's Office at 505-955-6521.

SANTA FE NEW MEXICAN

150 Washington Ave., Ste 105
Mail Payments To:
PO Box 2048
Santa Fe, NM 87504
Phone: 505-983-3303
FAX: 505-984-1785

Ad Proof/ Order Confirmation/ Receipt Invoice

ZENG LLC
301 Old Santa Fe Trial
Santa Fe NM, 87501

505-396-0310

Tagline:	LEGAL #93066		
Account Number:	STZL2		
Ad ID:	81589		
		Sales Rep:	Alejandra Molina
Ordered By:	Joyce Liang	**Order Taken By:**	Alejandra Molina
Ad Cost:	$125.20		
Tax Amount:	$10.25	**Payment**	$0.00
Total Amount:	$135.45	**Tagline:**	LEGAL #93066
Amount Due:	$135.45		
PO Number:			
Payment:	$0.00		
Major Class:	LEGALS	**Product:**	
Classification:	Legals	**Placement:**	
		Ad Size:	1.22" x 6.880"
Ad Type	Legal (wrapper)	**Modular Size:**	
# of Words	177	**Color:**	

Run Dates:

09/27/24, 10/04/24

LEGAL #93066

CITY OF SANTA FE

NOTICE OF PUBLIC HEARING

Notice is hereby given that the City of Santa Fe Liquor Hearing Officer will hold a public hearing at 4:00PM on Mon, Oct. 28, 2024.

The purpose of this public hearing is to discuss a request from Zeng, LLC, for the following:

a) Pursuant to §60-6B-10 NMSA 1978, consideration of a waiver of the 300 foot location restriction to allow the sale of alcohol at Zeng Chinese Restaurant, 311 Old Santa Fe Trail, which is within 300 feet of San Miguel Chapel, located at 401 Old Santa Fe Trail.

b) If the waiver of the 300 foot location restriction is granted, consideration of a request for a Restaurant A (Beer & Wine) Liquor License with On-Premises Consumption Only, to be located at Zeng Chinese Restaurant, 311 Old Santa Fe Trail.

Virtual meeting information will be posted on the City of Santa Fe's Weekly Meeting List at least seventy-two (72) hours before the meeting at santafe.primegov.com/public/portal.

Geralyn F. Cardenas
Interim City Clerk

PUB: Sept. 27, Oct. 04, 2024.

City of Santa Fe, New Mexico

200 Lincoln Avenue, P.O. Box 909, Santa Fe, N.M. 87504-0909
www.santafenm.gov

Alan Webber, Mayor

Councilors:
Signe I. Lindell, Mayor Pro Tem, District 1
Alma G. Castro, District 1
Michael J. Garcia, District 2
Carol Romero-Wirth, District 2
Lee Garcia, District 3
Pilar F.H. Faulkner, District 3
Jamie Cassutt, District 4
Amanda Chavez, District 4

VIA EMAIL – liang8808@yahoo.com

October 21, 2024

Joyce Liang
Zeng, LLC
311 Old Santa Fe Trail
Santa Fe, New Mexico 87501

RE: Request from Zeng, LLC, for a waiver of the 300 foot location restriction to allow the sale of alcohol at Zeng Chinese Restaurant, 311 Old Santa Fe Trail, which is within 300 feet of San Miguel Chapel, located at 401 Old Santa Fe Trail, and consideration of a request for a Restaurant A (Beer & Wine) Liquor License with On-Premises Consumption Only, to be located at Zeng Chinese Restaurant, 311 Old Santa Fe Trail.

Dear Ms. Liang:

The public hearing before the City of Santa Fe Liquor Hearing Officer for the above referenced request has been set for Monday, October 28, 2024, at 4:00 p.m. This will be a virtual hearing via Zoom. We will email you the meeting invite on the morning of the hearing.

The City of Santa Fe's Governing Body will consider the Liquor Hearing Officer's recommendation at their November 13, 2024, meeting.

Attached is a copy of the notice for the public hearing.

Should you have any questions, or require anything further from our office, do not hesitate to call me at 505.955.6520.

Sincerely,

Geralyn F. Cardenas
Interim City Clerk

/arm

CITY OF SANTA FE

NOTICE OF PUBLIC HEARING

Notice is hereby given that the City of Santa Fe Liquor Hearing Officer will hold a public hearing at 4:00 p.m. on Monday, October 28, 2024.

The purpose of this public hearing is to discuss a request from Zeng, LLC, for the following:

a) Pursuant to §60-6B-10 NMSA 1978, consideration of a waiver of the 300 foot location restriction to allow the sale of alcohol at Zeng Chinese Restaurant, 311 Old Santa Fe Trail, which is within 300 feet of San Miguel Chapel, located at 401 Old Santa Fe Trail.

b) If the waiver of the 300 foot location restriction is granted, consideration of a request for a Restaurant A (Beer & Wine) Liquor License with On-Premises Consumption Only, to be located at Zeng Chinese Restaurant, 311 Old Santa Fe Trail

Virtual meeting information will be posted on the City of Santa Fe's Weekly Meeting List at least seventy-two (72) hours before the meeting at santafe.primegov.com/public/portal.

Geralyn F. Cardenas
Interim City Clerk

Received by The Santa Fe New Mexican
Date: September 24, 2024

To Be Published: September 27, 2024
AND
October 4, 2024

By _____
The Santa Fe New Mexican (Signature)

City of Santa Fe, New Mexico

200 Lincoln Avenue, P.O. Box 909, Santa Fe, N.M. 87504-0909
www.santafenm.gov

Alan Webber, Mayor

Councilors:
Signe I. Lindell, Mayor Pro Tem, District 1
Alma G. Castro, District 1
Michael J. Garcia, District 2
Carol Romero-Wirth, District 2
Lee Garcia, District 3
Pilar F.H. Faulkner, District 3
Jamie Cassutt, District 4
Amanda Chavez, District 4

Certified Mail No. : 7013 0600 0000 5934 1120

October 21, 2024

San Miguel Chapel
401 Old Santa Fe Trail
Santa Fe, New Mexico 87501

To Whom It May Concern,

The City Clerk's Office provides notification as a courtesy to schools and places of worship when a Liquor License request is received that is located within 300 feet of one of these entities. This letter is to notify San Miguel Chapel that there is a Liquor License being requested by Zeng, LLC, to be located at 311 Old Santa Fe Trail. The proposed liquor license location is located within 300 feet from your building that will serve and sell alcohol, pending Governing Body approval. The requesting applicant is required to obtain a waiver, due to the 300 foot location restriction.

If you have any additional questions, comments, or concerns, you can participate at the scheduled Liquor License Hearing. Please note participation is not required. Information for the scheduled Liquor License Hearing is below:

Date: October 28, 2024
Time: 4:00 PM
Website Link: https://santafe.primegov.com/public/portal - The Zoom link will be on the Meeting Agenda.

Should you have any questions, or require additional information, please do not hesitate to call me at 505.955.6520. Thank you!

Sincerely,

Geralyn F. Cardenas
Interim City Clerk

/arm

Applicant Supplemental Information Form

1. **Name of Applicant:** Zeng LLC
   D/B/A Name to be used: Zeng Chinese Restaurant
   Proposed License Location: 311 old Santa Fe Trail Santa Fe NM 87501
   Telephone number: 505-228-9619
   Email: liang8808@yahoo.com

2. **Type of liquor license request:**
   - [X] New License (indicate type: A)
   - [ ] Transfer of location (indicate type:)
   - [ ] Transfer of ownership (indicate type:)
   - [ ] Transfer of ownership and location (indicate type:)

3. **Are alcoholic beverages currently being dispensed at the proposed location?**
   - [ ] Yes (If yes, License # and Type:)
   - [X] No

4. **Were alcoholic beverages previously dispensed by the requesting business?**
   - [ ] Yes (If yes, License # and address where alcohol was being dispensed:)
   - [X] No

5. **Does this business have any record of violation?**
   - [ ] Yes (If yes, please explain: .)
   - [X] No

6. **What are the current/previous and proposed hours of operation of this business?**
   Current/Previous Hours of Operation: 7 days 11:00 am - 9:00 Pm
   Proposed Hours of Operation:

7. **Is an outdoor seating/patio area included in the licenses premise?**
   - [X] Yes (If yes, is the area fully enclosed? [X] Yes [ ] No)
   - [ ] No

8. **What, if any, are the anticipated peak days and times at the proposed business location?**

What days? Friday Saturday & Sunday

What times? Dinner time

9. **Do you have a business license with the City of Santa Fe?**

[X] Yes (If yes, what is your License #? 1001148)

[ ] No (*Please contact the Business Licensing Department at 505-955-6551 to obtain a business license.*)

10. **Do you have a posted occupant load issued by the City of Santa Fe Fire Department?**

[ ] Yes (If yes, what is your occupant load issued for your business? _____)

[ ] No (*Please contact the City of Santa Fe Fire Department - 505-955-3310 to schedule your inspection*)

11. **Have you been issued a Certificate of Compliance from the City of Santa Fe Fire Department?**

[X] Yes (If yes, what is the date the Certificate was issued? 3-19-2024

[ ] No (*Please contact the City of Santa Fe Fire Department - 505-955-3310 to schedule your inspection*)

12. **Please indicate the anticipated daily occupant load due to the sale of alcohol at this location:**

50

13. **Please indicate the anticipated change in business volume due to the sale of alcohol and explain:**

[X] Business is expected to increase (additional number of customers per day: 300).

[ ] Business is expected to decrease (loss of customers per day: _____).

[ ] Business is expected to remain the same.

* Please explain your answer: expect more customer oder more Drinks

14. **Indicate which of the following statements best reflects your opinion regarding traffic impacts if this request is approved and explain:**

[ ] Traffic can be expected to increase on adjacent streets.

[X] Traffic will not increase on adjacent streets.

* Please explain your answer: We have own Parking lot. It should not reflects traffic impacts.

Name of person completing this form: Shuxin Zeng

Telephone number: 505-396-0310

Date: 9-23-2024

Applicant: Zeng, LLC (DBA Zeng Chinese Restaurant) **Proposed Location**: 311 Old Santa Fe Trail

(FOR CITY USE ONLY)

Based on the information provided and review of City Reports, staff has found the following in accordance with Ordinance (4-4.3):

Geographic Information System Mapping (GIS) Department

☑ Yes, this business is located within three hundred (300) feet of a church and/or school. *A waiver of the 300 foot location restriction will be requested.*

☐ No, this business is not located within three hundred (300) feet of a church and/or school.

(Please see attached map indicating whether the proposed licensed premise is within three hundred (300) feet of a church and/or school.)

Business Licensing Department

☑ Yes, the requesting business has a business license issued by the City of Santa Fe. License # 236199.

☐ No, the requesting business does not have a business license issued by the City of Santa Fe.

Code Enforcement Department

■ Yes, the applicant is in compliance with all Land Use Codes.

☐ No, the applicant is not in compliance with Land Use Code(s).

*Note: N/A

*(Please also provide a Code Enforcement Report related to Litter and Noise of the requesting business location.)

Verification Completed By: Jason D. Sena

Title: Enforcement Division Manager

Date: Oct 15, 2024

Traffic Engineering Department

☐ Yes, it appears that the approval of this request will create unacceptable traffic impacts.

*Note: Existing Restaurant Location, would serve hotel customers, downtown area

■ No, it does not appear that this request will create any unacceptable traffic impacts.

Verification Completed By: Jeanne Wolfenbarger

Title: Traffic Engineer

Date: Oct 8, 2024

City of Santa Fe Fire Department

■ Yes, the applicant is in compliance with all Fire Codes.

☐ No, the applicant is not in compliance with Fire Code(s).

*Note: Fire inspection completed and approved March 5, 2024. cert # 2023-33212

Fire inspection completed and approved March 5, 2024. cert # 2023-33212

Verification Completed By: Geronimo Griego
Geronimo Griego (Oct 5, 2024 10:18 MDT)

Title: Fire Marshal

Date: Oct 5, 2024

300ft Buffer Map
311 Old Santa Fe Trl

Note: Above mentioned location IS within 300' of a school, church or daycare.

RE: Lic. No. / Appl. No.
Name of Applicant: Zeng, LLC
Doing Business As: Zeng Chinese Restaurant
Proposed Location: 311 Old Santa Fe Trail
Santa Fe, NM 87501

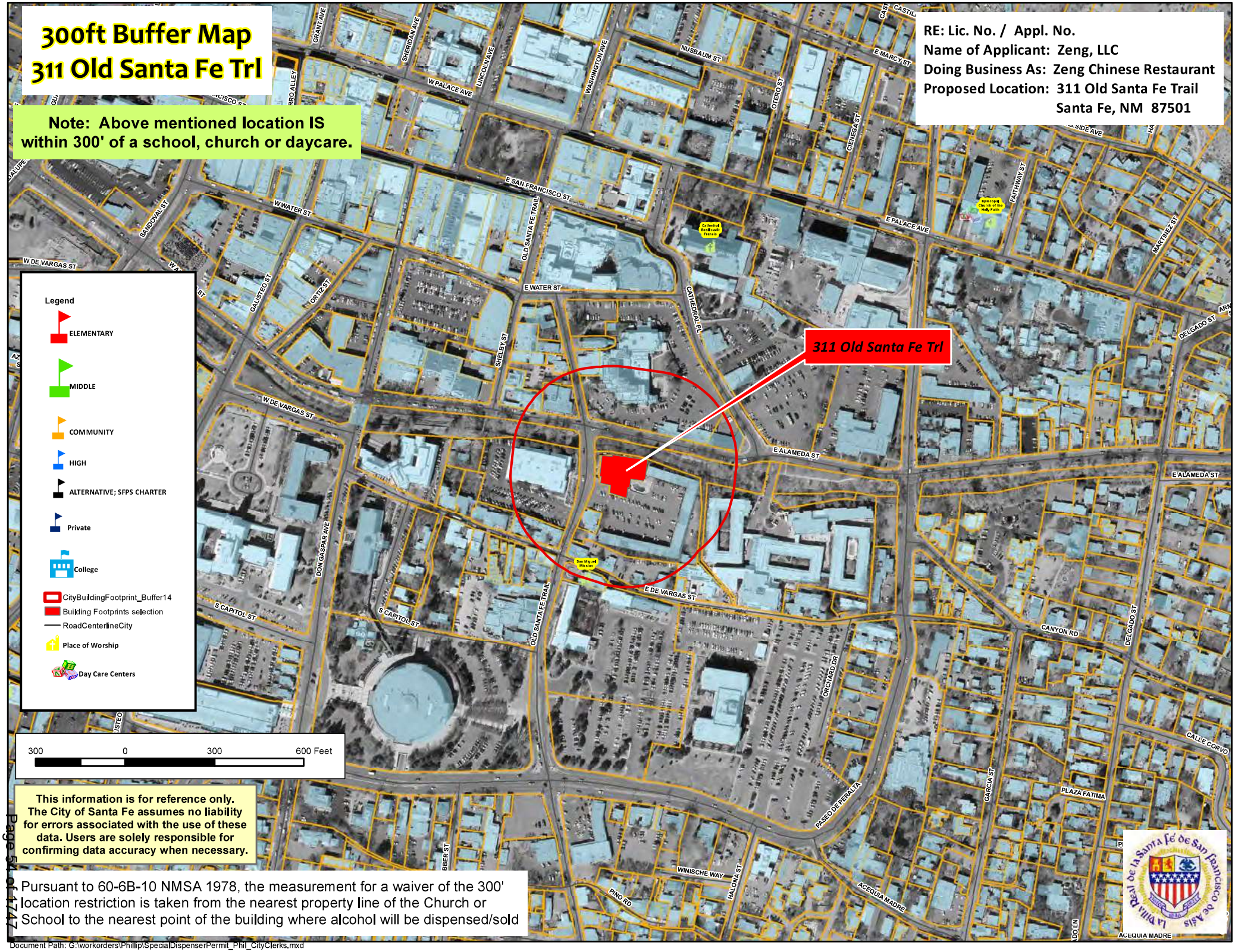

This information is for reference only. The City of Santa Fe assumes no liability for errors associated with the use of these data. Users are solely responsible for confirming data accuracy when necessary.

Pursuant to 60-6B-10 NMSA 1978, the measurement for a waiver of the 300' location restriction is taken from the nearest property line of the Church or School to the nearest point of the building where alcohol will be dispensed/sold

Document Path: G:\workorders\Phillip\SpecialDispenserPermit_Phil_CityClerks.mxd

City of Santa Fe, New Mexico

200 Lincoln Avenue, P.O. Box 909, Santa Fe, N.M. 87504-0909
www.santafenm.gov

Alan Webber, Mayor

Councilors:
Signe I. Lindell, Mayor Pro Tem, District 1
Alma G. Castro, District 1
Michael J. Garcia, District 2
Carol Romero-Wirth, District 2
Lee Garcia, District 3
Pilar F.H. Faulkner, District 3
Jamie Cassutt, District 4
Amanda Chavez, District 4

DATE: October 10, 2024

TO: Thomas M. Graham, Assistant Planning & Land Use Department Director

VIA: Vidal Garcia

FROM: Vidal Garcia Acting Enforcement Supervisor

ITEM & ISSUE

Litter and noise impact assessment,due to a request from Zeng, LLC, for the following:

a) Pursuant to §60-6B-10 NMSA 1978, consideration of a waiver of the 300 foot location restriction to allow the sale of alcohol at Zeng Chinese Restaurant, 311 Old Santa Fe Trail, which is within 300 feet of San Miguel Chapel, located at 401 Old Santa Fe Trail.

b) If the waiver of the 300 foot location restriction is granted, consideration of a request for a Restaurant A (Beer & Wine) Liquor License with On-Premises Consumption Only, to be located at Zeng Chinese Restaurant, 311 Old Santa Fe Trail

BACKGROUND AND SUMMARY

It is not anticipated that there will be a substantial change in litter and noise because of this request.

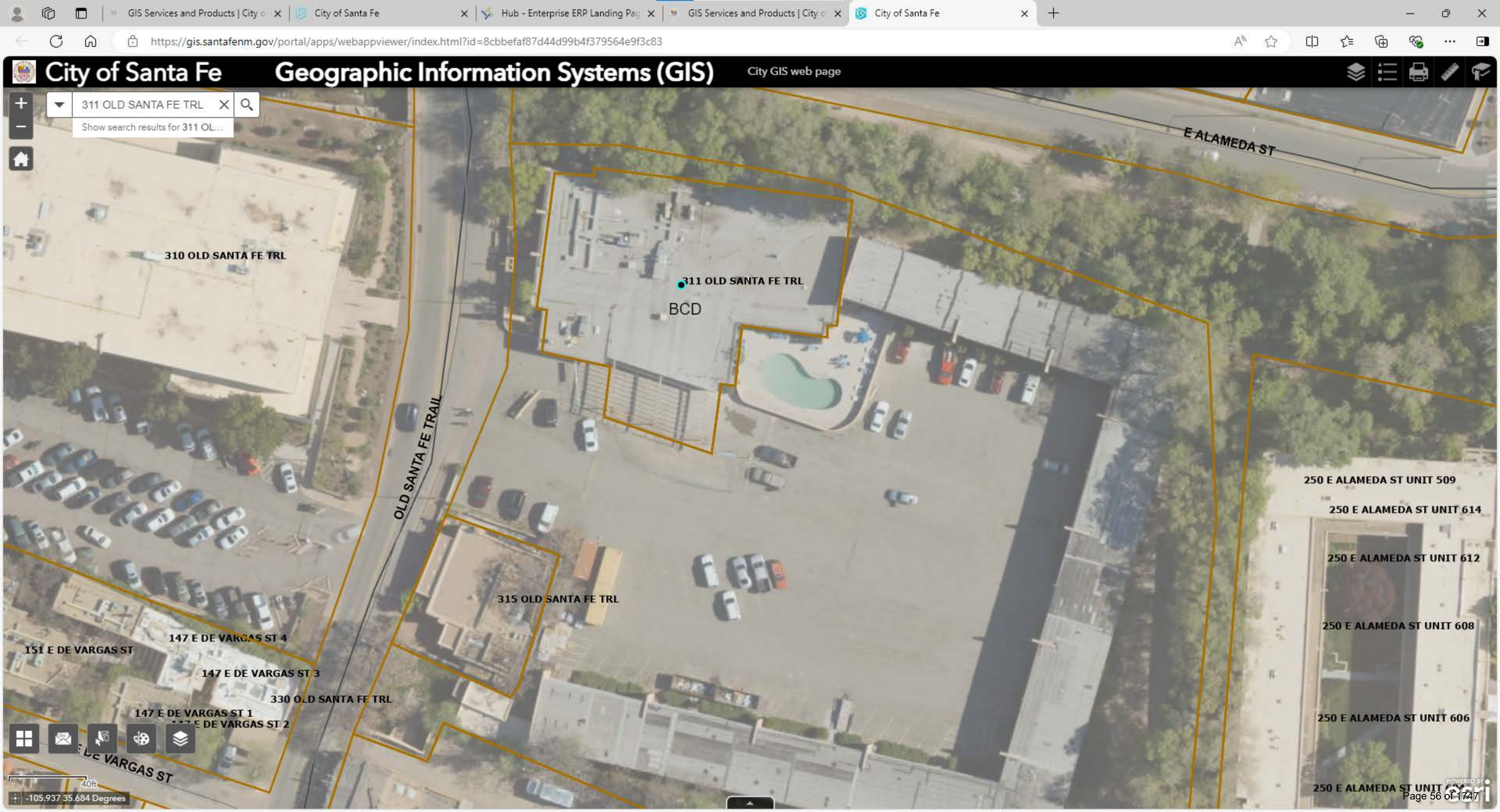
City of Santa Fe
Geographic Information Systems (GIS)
City GIS web page
311 OLD SANTA FE TRL
Show search results for 311 OL...
E ALAMEDA ST
310 OLD SANTA FE TRL
311 OLD SANTA FE TRL
BCD
OLD SANTA FE TRAIL
315 OLD SANTA FE TRL
250 E ALAMEDA ST UNIT 509
250 E ALAMEDA ST UNIT 614
250 E ALAMEDA ST UNIT 612
250 E ALAMEDA ST UNIT 608
250 E ALAMEDA ST UNIT 606
147 E DE VARGAS ST 4
151 E DE VARGAS ST
147 E DE VARGAS ST 3
330 OLD SANTA FE TRL
147 E DE VARGAS ST 1
147 E DE VARGAS ST 2
DE VARGAS ST
40ft
-105.937 35.684 Degrees

CATEGORY Specific Use	RR	R-1 - R-6	R-7 - R-9	R-7 - I	RC-5, RC-8	R-10 - R-29	MHP	RAC	AC**	C-1	C-2	C-4	HZ	BCD	I-1	I-2	BIP	SC-1	SC-2	SC-3	MU ***	Use-Specific Regs 14-6.2
Bar, cocktail lounge, nightclub, no outdoor entertainment								S [3,10]	S [3]		P*			P	P	P		P*	P*	P*	P [2]	
Bar, cocktail lounge, nightclub, with outdoor entertainment								S [3,10]	S [3]		P*			P*	P*	P*		P*	P*	P*	P* [2]	
Restaurant - full service, with or without incidental alcohol service								S [3,10]	S [3]		P			P	P	P	S	P	P	P	P	
Restaurant with bar, cocktail lounge or nightclub comprising more than 25% of total serving area.								S [3,10]	S* [3]		P*			P*	P	P		P*	P*	P*	P* [2]	
Restaurant - Fast service/take-out, no drive-through/drive-up								S [3,10]		P [4]	P	P [4]		P	P	P	S	P	P	P	P	
Restaurant - with drive-through/drive-up											P*			P*	P*	P*	S	P*	P*	P*	P* [2]	

Signature: 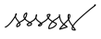

Email: gfcardenas@santafenm.gov

City of Santa Fe, New Mexico
Memorandum

Date: October 23, 2024

To: Governing Body
Finance Committee
Quality of Life Committee
Public Works and Utilities Committee

From: Xavier Vigil, Committee and Contracts Coordinator XIV

Via: Geralyn Cardenas, Assistant City Clerk

Re: 2025 Council Committee and Governing Body Committee Meeting Calendar

---

Item and Issue

Request for Approval of the 2025 Council Committee and Governing Body Meeting Calendar. (Xavier Vigil, Committee and Contracts Coordinator; xivigil@santafenm.gov)

Background and Summary

The 2025 Council Committee and Governing Body Meeting Calendar will follow the same scheduling sequence that was used in creating last year's calendar. There are no major changes in comparison to the previous year's calendar.

Recommended Action

Approve the 2025 Council Committee and Governing Body Meeting Calendar.

Signature: 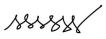

Email: gfcardenas@santafenm.gov

2025 Committee Meeting Calendar Memo

Final Audit Report 2024-10-24

Created:	2024-10-23
By:	XAVIER VIGIL (xivigil@santafenm.gov)
Status:	Signed
Transaction ID:	CBJCHBCAABAA3fy1K2UkqZDD3lVjge_VL5jNXVfXSewh

"2025 Committee Meeting Calendar Memo" History

Document created by XAVIER VIGIL (xivigil@santafenm.gov)
2024-10-23 - 7:23:57 PM GMT- IP address: 63.232.20.2

Document emailed to GERALYN CARDENAS (gfcardenas@santafenm.gov) for signature
2024-10-23 - 7:24:18 PM GMT

Email viewed by GERALYN CARDENAS (gfcardenas@santafenm.gov)
2024-10-24 - 8:52:51 PM GMT- IP address: 104.47.64.254

Document e-signed by GERALYN CARDENAS (gfcardenas@santafenm.gov)
Signature Date: 2024-10-24 - 8:53:01 PM GMT - Time Source: server- IP address: 63.232.20.2

Agreement completed.
2024-10-24 - 8:53:01 PM GMT

Powered by Adobe Acrobat Sign

CITY OF SANTA FE

2025 GOVERNING BODY & COUNCIL COMMITTEE CALENDAR

- GOVERNING BODY
- FINANCE COMMITTEE
- PUBLIC WORKS & UTILITIES COMMITTEE
- QUALITY OF LIFE COMMITTEE

JANUARY

S	M	T	W	Th	F	Sa
			1	2	3	4
5	6	7	8	9	10	11
12	13	14	15	16	17	18
19	20	21	22	23	24	25
26	27	28	29	30	31	

FEBRUARY

S	M	T	W	Th	F	Sa
						1
2	3	4	5	6	7	8
9	10	11	12	13	14	15
16	17	18	19	20	21	22
23	24	25	26	27	28	

MARCH

S	M	T	W	Th	F	Sa
						1
2	3	4	5	6	7	8
9	10	11	12	13	14	15
16	17	18	19	20	21	22
23	24	25	26	27	28	29
30	31					

APRIL

S	M	T	W	Th	F	Sa
		1	2	3	4	5
6	7	8	9	10	11	12
13	14	15	16	17	18	19
20	21	22	23	24	25	26
27	28	29	30			

MAY

S	M	T	W	Th	F	Sa
				1	2	3
4	5	6	7	8	9	10
11	12	13	14	15	16	17
18	19	20	21	22	23	24
25	26	27	28	29	30	31

JUNE

S	M	T	W	Th	F	Sa
1	2	3	4	5	6	7
8	9	10	11	12	13	14
15	16	17	18	19	20	21
22	23	24	25	26	27	28
29	30					

JULY

S	M	T	W	Th	F	Sa
		1	2	3	4	5
6	7	8	9	10	11	12
13	14	15	16	17	18	19
20	21	22	23	24	25	26
27	28	29	30	31		

AUGUST

S	M	T	W	Th	F	Sa
					1	2
3	4	5	6	7	8	9
10	11	12	13	14	15	16
17	18	19	20	21	22	23
24	25	26	27	28	29	30
31						

SEPTEMBER

S	M	T	W	Th	F	Sa
	1	2	3	4	5	6
7	8	9	10	11	12	13
14	15	16	17	18	19	20
21	22	23	24	25	26	27
28	29	30				

OCTOBER

S	M	T	W	Th	F	Sa
			1	2	3	4
5	6	7	8	9	10	11
12	13	14	15	16	17	18
19	20	21	22	23	24	25
26	27	28	29	30	31	

NOVEMBER

S	M	T	W	Th	F	Sa
						1
2	3	4	5	6	7	8
9	10	11	12	13	14	15
16	17	18	19	20	21	22
23	24	25	26	27	28	29
30						

DECEMBER

S	M	T	W	Th	F	Sa
	1	2	3	4	5	6
7	8	9	10	11	12	13
14	15	16	17	18	19	20
21	22	23	24	25	26	27
28	29	30	31			

VIEW MEETINGS AND AGENDAS: **SANTAFE.PRIMEGOV.COM/PUBLIC/PORTAL**

2025 Governing Body and Council Committee Calendar

Governing Body

01/15/2025
01/29/2025
02/12/2025
02/26/2025
03/12/2025
03/26/2025
04/09/2025
04/30/2025
05/14/2025
05/28/2025
06/11/2025
06/25/2025
07/09/2025
07/30/2025
08/13/2025
08/27/2025
09/10/2025
09/24/2025
10/08/2025
10/29/2025
11/12/2025
12/10/2025

Finance Committee

01/13/2025
01/27/2025
02/10/2025
02/24/2025
03/10/2025
03/24/2025
04/07/2025
04/28/2025
05/12/2025
05/27/2025
06/09/2025
06/23/2025
07/07/2025
07/28/2025
08/11/2025
08/25/2025
09/08/2025
09/22/2025
10/06/2025
10/27/2025
11/10/2025
12/10/2025

Public Works and Utilities Committee

01/06/2025
01/21/2025
02/03/2025
02/17/2025
03/03/2025
03/17/2025
03/31/2025
04/21/2024
05/05/2025
05/19/2025
06/02/2025
06/16/2025
06/30/2025
07/21/2025
08/04/2025
08/18/2025
09/02/2025
09/15/2025
09/29/2025
10/20/2025
11/03/2025
12/01/2025

Quality of Life Committee

01/08/2025
01/22/2025
02/05/2025
02/19/2025
03/05/2025
03/19/2025
04/02/2025
04/23/2025
05/07/2025
05/21/2025
06/04/2025
06/18/2025
07/02/2025
07/23/2025
08/06/2025
08/20/2025
09/03/2025
09/17/2025
10/01/2025
10/22/2025
11/05/2025
12/03/2025

CITY OF SANTA FE

Date: October 30, 2024

To: Governing Body

Via: Regina Wheeler, Public Works Director RW (Oct 30, 2024 12:32 MDT)
Henri Hammond-Paul, Community Health and Safety Director HENRI HAMMOND-PAUL (Oct 31, 2024 09:34 MDT)

From: **Brian Williams, Office of Emergency Management Director** BRIAN WILLIAMS (Oct 30, 2024 11:04 MDT)

Subject: **Building Resilience Infrastructure in Communities (BRIC) Grant Approval – Microgrids Scoping and Design**

ITEM AND ISSUE:
Request Approval of the 2022 FEMA Building Resilient Infrastructure in Communities (BRIC) Sub-award Grant Agreement EMT-2022-BR-001 in the total amount of $524,999 with the New Mexico Department of Homeland Security and Emergency Management for the Design of Microgrids for Community Resiliency. Brian Williams, Director Office of Emergency Management, bgwilliams@santafenm.gov.

Request Approval of a FY25 Budget Amendment Resolution (BAR) in the Total Amount of $524,999 to Budget FY25 expenditures, grant revenue, and required local match for the sub-recipient grant award from FEMA.

Action Requested: Grant Approval; BAR approval

BACKGROUND AND SUMMARY:
In 2020, the Emergency Management Office worked with the Departments of Community Health and Safety, Fire, Public Works and Utilities to create a list of priority resiliency projects to set forth for funding. Working with FEMA and the State Homeland Security Department, two projects were selected to complete the application process and have been awarded funding.

In alignment with the City of Santa Fe Disaster Mitigation Plan and following the approach outlined in the Department of Defense Climate Adaption Plan, the City of Santa Fe will scope a project with the goal of powering facilities with renewable microgrids to ensure essential services such as water, wastewater, transportation and emergency services during a disaster. Specific facilities that will be assessed for feasibility to be powered with renewable microgrid include drinking water pumps, wastewater plant and collection pumps, emergency operations center, emergency shelter facilities, Santa Fe Regional Airport, Santa Fe Trails Transit Operations Facility, and police and fire stations.

City facilities and residents experience power outages during disasters including extensive flooding which occurred in July 2018, intense electrical storms which occur every summer and fire, which has thankfully not occurred in recent history, but was very close to City limits in Spring 2022. The City has backup generators on some critical facilities, but this project would undertake an assessment to provide power using renewable microgrids. Renewable microgrids utilize battery storage, control logic and renewable energy generation to power facilities without the need for access to diesel fuel.

With this project, the City of Santa Fe would not only create resiliency and reduce human suffering and property loss during a disaster, but also power more City daily operations with renewable power, further reducing climate impacts. There may be significant energy cost savings and broader grid benefits during normal operations resulting from energy storage and controls at facilities that could significantly reduce peak demand and energy use during peak times.

Building on the City's significant behind the meter solar capacity at key City facilities and in partnership with private enterprise and the community, the City would undertake an Investment Grade Audit to:

1. Identify the facilities that combined would create a backbone of essential services of water, wastewater, transportation and emergency services. Ensure maximum leverage of existing behind the meter solar capacity.
2. Determine feasibility of designing and installing a renewable microgrid behind the meter at each facility to provide 5 days of power.
3. Design microgrid systems for each facility complete
4. Develop energy savings estimates, construction cost estimates, equipment specifications and construction project plans.

Public Works Department will manage the project, while the Office of Emergency Management will manage the grant and interfacing with both FEMA, and the New Mexico Department of Homeland Security and Emergency Management. Once this feasibility and design phase of the project are completed, additional FEMA funding will be sought for construction.

This Building Resilient Infrastructure in Communities (BRIC) Grant provides a 75% federal share of $399,990.75 and requires 25% local share of $125,008.25. The grant amount includes a 100% federally funded Subrecipient Management Costs $24,966.00 to assist with staff capacity in managing the grant.

The term of the agreement will expire on February 14, 2027.

PROCUREMENT METHOD:
Not applicable. Grant approval only.

Supporting Information:

CONTRACT NUMBER:
The FY25 Project ledger number is PWD2531532

SOURCE/REVENUE: ☒Expense ☒Revenue

The funding source is: FEMA Building Resilient Infrastructure in Communities (BRIC) Grant

Fund Name/Number: Resource CIP/315
Munis Org Name/Number: Resource Conservation CIP / 3159981
Munis Expense Object Name/Number: WIP Construction / 572970
Munis Expense Object Name/Number: Fed Grant (FEMA) / 490580

If the project is grant funded? List grant award number*:* *EMT-2022-BR-001*

Grant Manager / Accounting Officer Approval: Matthew Bonifer Matthew Bonifer (Oct 31, 2024 10:36 MDT) **Date:** 10/31/2024

Comment/Exceptions: _____

Project Ledger #: **PWD2531532** _____

Budget Officer Approval: Andy Hopkins _____ **Date:** 10/31/2024
Comment/Exceptions: _____

CAPITAL ASSET (will this procurement result in a tangible item that costs more than $5,000?):

☒Yes | ☐ No

 # (if known): _____

Repair or Replacement of Existing Equipment:

☐Yes | ☒ No

Capital Project:
(New and improvement projects that are going to cost $10,000 or more)
☒ Yes | ☐ No

Project Ledger #: **P WD 253 1,532** _____

Anticipated length of project: **3 YEARS** _____

Asset Manager Approval: _____ **Date:** _____
Comment/Exceptions: _____

Department Approvals:
IT Components: ☐ **Yes | ☒ No**
Vehicles: ☐ **Yes | ☒ No**
Facilities, Furniture, Fixtures, Equipment: ☐ **Yes | ☒ No**

Department Contract Administrator Contact Info:
Amanda Archuleta, ajarchuleta@santafenm.gov;
Halona Crowe, hcrowe@santafenm.gov

ATTACHMENTS:

1. Sub-Recipient Grant Agreement
2. Budget Amendment Resolution

Log # *{Finance use only}*:	
Journal # *{Finance use only}*:	

City of Santa Fe, New Mexico
BUDGET AMENDMENT RESOLUTION (BAR)

DEPARTMENT / DIVISION NAME	DATE
Public Works / Resource Conservation CIP	10/22/2024

ITEM DESCRIPTION	ORG	OBJECT	PROJECT	INCREASE	DECREASE
EXPENDITURES				*{enter as positive #}*	*{enter as negative #}*
WIP Construction - Critical Infrastructure Microgrids Scoping	3159981	572970	PWD2531532	500,033	
Professional Contracts - Critical Infrastructure Microgrids	2212850	510300	PWD2531532	24,966	
WIP Construction - 1/2 % GRT	3650416	572970			(125,008)
Capital Transfer to Resource Conservation CIP	3650416	760315		125,008	
REVENUES				*{enter as negative #}*	*{enter as positive #}*
FEMA - Critical Infrastructure Microgrids Scoping	3159981	490580	PWD2531532	(375,025)	
Federal Emergency Management Agency (GRANT)	2212850	490580	PWD2531532	(24,966)	
Capital Transfer from 1/2% GRT	3159981	660365		(125,008)	
				$ 125,008	$ (125,008)

JUSTIFICATION: *(use additional page if needed)*
--Attach supporting documentation/memo

FY 25 budget increase for sub-recipient grant award from Department of Homeland Security BRIC for Critical Infrastructure Microgrids Scoping in the amount of $399,991 with a local match requirement of $125,008 (from available CIP funds in 1/2% GRT fund) for a total amount of $524,999 (expires 02/14/2027)

{Complete section below if BAR results in a net change to ANY Fund}

Fund(s) Affected	Fund Balance Increase/(Decrease)
TOTAL:	

Halona Crowe — 10/22/2024
Prepared By *{print name}* — Date

Division Director Signature *{optional}* — Date

HENRI HAMMOND-PAUL (Oct 31, 2024 09:34 MDT) 10/31/2024
Department Director Signature — Date

{Use this form for Finance Committee/ City Council agenda items ONLY}

CITY COUNCIL APPROVAL

City Council Approval Date

Agenda Item #:

Andy Hopkins — 10/31/2024
Budget Officer — Date

Finance Director *{≤ $5,000}* — Date

City Manager *{≤ $60,000}* — Date

State of New Mexico
DEPARTMENT OF HOMELAND SECURITY & EMERGENCY MANAGEMENT
P.O. Box 27111
Santa Fe, NM 87502

SUB-RECIPIENT GRANT AGREEMENT

FY22 Building Resilient Infrastructure and Communities (BRIC)

Federal Grant No.: EMIT-2022-BR-001 Assistance Listing: 97.047

1. SUB-GRANT NO.	2. SUB-RECIPIENT NAME	3. PROJECT NAME	
EMT-2022-BR-001	City of Santa Fe	Critical Infrastructure Microgrids Scoping	
4. STATE DFA VENDOR NUMBER	**5. EIN NUMBER**	**6. SAM UEI NUMBER**	**7. CAGE CODE**
54360	856000168	QLN2YKMMJ8X6	4C987
8. SUB-RECIPIENT PHYSICAL ADDRESS	**9. SUB-RECIPIENT REMIT ADDRESS**		
200 Lincoln Ave. Santa Fe, NM 87504	200 Lincoln Ave. Santa Fe, NM 87504		
10. DHSEM CONTACT NAME:	**11. CONTACT DESK PHONE:**	225-313-1774	
Natalie West	**CONTACT EMAIL ADDRESS:**	DHSEM.mitigation@dhsem.nm.gov cc: natalie.west@dhsem.nm.gov	
12a. PERFORMANCE PERIOD START DATE	2/15/2024	**12b. PERFORMANCE PERIOD END DATE**	2/14/2027
13. TOTAL AWARD AMOUNT:	$524,999.00		
13a. FEDERAL SHARE	**13b. LOCAL SHARE**	**13c. STATE SHARE**	
$399,990.75	$125,008.25	$0.00	

14a. NAME OF PROJECT AWARD		14b. FEDERAL SHARE	14c. NON-FEDERAL SHARE
1	Contractual	$375,024.75	$125,008.25
2	Subrecipient Management Costs	$24,966.00	$
3		$	$
4		$	$
5		$	$

6		$	$
TOTAL AMOUNT OF PROJECT		$399,990.75	$125,008.25

WHEREAS The State of New Mexico will serve as the "pass-through entity" with respect to the State's role in providing sub-awards and administering grant assistance provided to sub-recipients and may, subject to a Memorandum of Agreement, directly support project development and administration.

WHEREAS funding has been obligated from the Federal Emergency Management Agency pursuant to a request by the applicant, The Sub-Recipient, City of Santa Fe.

NOW, THEREFORE, it is mutually understood and agreed between the recipient NMDHSEM, and **City of Santa Fe,** hereinafter referred to as "sub-recipient," as follows:

ARTICLE 1: REQUIREMENTS AND ASSURANCES

A. The sub-recipient hereby agrees that the performance period for the grant identified on Page 1, Box 1. is consistent with the performance period identified on Page 1, Box 12a. and 12b. This Sub-recipient Grant Agreement, as amended, shall remain open for administrative purposes if necessary to achieve final payment and financial reconciliation.

B. The sub-recipient hereby agrees that the sub-recipient official signing this Sub-recipient Grant Agreement certifies that all financial expenditures, including all supporting documents submitted for reimbursement, have been incurred by the sub-recipient and are eligible and allowable expenditures consistent with the guidelines for this award. The sub-recipient agrees to follow reasonable professional standards in all financial management and bookkeeping procedures necessary to carry out this agreement.

C. The sub-recipient hereby agrees that no member, officer, or employee of the sub-recipient organization, or its designees or agents, no member of the governing body of the locality in which the program is situated, and no other public official of such locality or localities who exercises any functions or responsibilities with respect to the program during his or her tenure or for one year after that, shall have any interest, direct or indirect, in any contract or subcontract, or the process thereof, for work to be performed in connection with this Sub-recipient Grant Agreement; the sub-recipient shall incorporate in all such contracts a provision prohibiting such interest pursuant to the purposes of this Sub-recipient Grant Agreement.

D. The sub-recipient hereby agrees that it understands and agrees that it cannot use any federal funds, either directly or indirectly, in support of the enactment, repeal, modification, or adoption of any law, regulation, or policy, at any level of government, without the express written approval of the State of New Mexico or FEMA.

E. The sub-recipient hereby agrees that FEMA reserves a royalty-free, non-exclusive, and irrevocable license to reproduce, publish, or otherwise use and authorize others to use, for federal government purposes: (1) the copyright in any work developed under this Sub-recipient Grant Agreement; and (2) any rights of copyright to which the sub-recipient purchases ownership with federal support. The sub-recipient agrees to consult with FEMA through NMDHSEM regarding allocating any patent rights that arise from or are purchased with this funding.

F. The sub-recipient hereby agrees that signatures of the sub-recipient officials on this Sub-recipient Grant Agreement attest to the sub-recipient's understanding, acceptance, and compliance with Lobbying, Debarment, Suspension, and Other Responsibility Matters; Drug- free Workplace; Conflict of Interest, and Non-Supplanting certifications. Federal funds will not be used to supplant state or local funds. Federal funds will be used to supplement existing sub-recipient funding to augment program activities and not replace those funds which have been appropriated in the budget for the same purpose.

G. The sub-recipient hereby agrees that their accounting system allows for the separation of fund sources. Funding provided under this Sub-recipient Grant Agreement cannot be commingled with funds from other federal, state, or local agencies, and each project must be accounted for separately.

H. The sub-recipient hereby agrees that it shall comply with applicable Federal Civil Rights Laws and Regulations: Title VI of the Civil Rights Act of 1964, Section 504 of the Rehabilitation Act of 1973, Title IX of the Education Amendments of 1972, Age Discrimination Act of 1975, and Americans with Disabilities Act of 1991. The sub-recipient will take reasonable steps to ensure Limited English Proficient (LEP) persons have meaningful access to its programs and activities. Executive Order 13379 Individuals with Disabilities in Emergency Preparedness, requires the government to support safety and security for individuals with disabilities in situations involving disasters, including earthquakes, tornadoes, fires, floods, hurricanes, and acts of terrorism.

I. The sub-recipient hereby certifies that for its employees, it has an Affirmative Action Plan/Equal Employment Opportunity Plan (EEOP) if not exempted by the Federal Government or New Mexico rule or statute. An EEOP is not required for sub-recipients of less than $25,000 or fewer than 50 employees.

J. The sub-recipient hereby certifies that its employees are eligible to work in the United States as verified by Form I–9, Immigration & Naturalization Service Employment Eligibility.

K. The sub-recipient hereby agrees that it is the responsibility of the sub-recipient to fully understand and comply with the requirements of the following, where such requirements apply to the sub-recipient set forth in:

1. 2 C.F.R. § 200: Code of Federal Regulations
2. 44 C.F.R. parts 7, 9, 10, 13, 14, 17, 18, 25, 206, 220, 221, 44 C.F.R. Part 209, 2 C.F.R. Part 200 and any other applicable FEMA policy memoranda and guidance documents
3. FEMA Hazard Mitigation Assistance Program and Policy Guide
4. New Mexico State Procurement Code
   New Mexico Administrative Code Title 2 – Public Finance https://www.srca.nm.gov/nmac-home/nmac-titles/title-2-public-finance/

ARTICLE 2: REIMBURSEMENT OF FUNDS

The NMDHSEM will apply the following procedures for making payments to sub-recipients:

A. Payment of Funds, General: Once FEMA has obligated funds and NMDHSEM has budgeted and encumbered those funds, the Cabinet Secretary is authorized to advance funds, as permissible, and to consider requests for payments for progress and completion based on proper review and approvals, in accordance with the sub-grant agreement or amendment as described below. Review and audit of expending and accounting of federal awards and state funds will be conducted to ensure records, reports, and documentation for compliance and tracing of funds are accounted for; 2 C.F.R.

§§ 200.302(b)(6), 200.305(a). The State Department of Finance and Administration (DFA) may require additional supporting data and documents prior to disbursement of funds.

B. Reimbursement shall be based upon authorized and allowable expenditures consistent with the project narrative, grant guidelines, and timely submission of Financial and Performance Progress Reports. Reimbursement of expenditures shall be requested quarterly or monthly if need be for expenditures within the performance period. A minimum of 25% (of the total project cost) in the non-federal match must be included on each request for reimbursement. All expenditures must be supported with source documentation (e.g., copies of proof of payment, invoices, receipts, timesheets with name/rate/hours and certified, breakdown of expenditures based on FEMA approved budget, warrants, a brief description of work done, required deliverables, etc.). Request for reimbursement will not be processed if quarterly financial or performance reports are delinquent. The final payment of 15% will not be made until DHSEM verifies that all activities are complete. All payments shall be made on an actual cost reimbursement basis.

C. Contracts: All requests for proposals/bids, sole–source procurements, single vendor responses to a competitive bid, and contracts require DHSEM pre–approval prior to implementation. The relevant contract must accompany requests for reimbursement for contractual services.

D. Local Match: Local matching funds must clearly support the source, the amount, and the timing of all matching contributions. When requesting reimbursement, the match percentage must be shown on each invoice. Copies of proof of payment, invoices, receipts, purchase orders, timesheets with name/wage/hours, cost allocation, general ledger, warrants, etc., must be submitted as a backup for the match.

E. Non-reimbursable Expenses:

- Transfer of funds between any programs. Contracts, single vendor response to a competitive bid, sole source contracts, and any procurement documentation not pre-approved by DHSEM.
- Training and related travel costs not pre-approved by DHSEM.
- Supplanting (using federal funds to purchase items previously budgeted for with state or local funds).
- Maintenance and/or wear and tear costs of general use vehicles and emergency response apparatus.
- Equipment purchased for an exercise cannot be used for permanent installation and/or beyond the scope of an exercise.
- Weapons and ammunition.
- Entertainment and sporting events
- Personal items such as laundry, personal hygiene items, magazines, in-room movies, personal travel, and personal phone calls.
- Travel insurance, visa, and passport charges.
- Lodging costs in excess of State per diem, as appropriate.
- Lunch when travel is wholly within a single day.
- Standalone working meals.
- Bar charges, alcoholic beverages.
- Finance, late fees, or interest charges.
- Lobbying, political contributions, and legislative liaison activities.
- Organized fundraising, including salaries of persons while engaged in these activities.
- Expenditures not supported with appropriate documentation when submitted for reimbursement. Only properly documented expenditures will be processed for payment. Unsupported expenditures will be returned to the jurisdiction for resubmission.

F. Payment Conditions. The sub-recipient must certify that in requesting and accepting a sub-grant payment, they have spent those funds on eligible expenditures; that the work performed was within the scope of work allowed for specific projects; and that all records pertinent to specific projects will be retained for at least the periods required under record retention regulation requirements from the closeout of the last project. The period of record retention for grant and financial data is three years if state funds are paid.

G. Delays and Denial of Payment. Reasons for delays in FEMA processing of payment requests include, but are not limited to, the following:

- Vendor identification number is missing or incorrect;
- Disaster and project number is missing;
- Period of performance (POP) listed is incorrect;
- Service delivery dates do not agree with invoices or outside of contract period;
- Dollar amount on forms do not agree;
- Mathematical errors;
- Full address of sub-grantee is not included;
- Sub-recipient did not provide required back-up documentation; or

Reasons for NMDHSEM declining payment requests include, but are not limited to, the following:

- The POP has expired;
- The amount exceeds the remaining funding available for disbursement prior to the final financial and program compliance reviews (the hold or funding retention amount);
- Request for payment requires a state and/or budget amendment, and cannot be processed until the amendment request is received/approved;
- The reimbursement requested is for an activity outside of the approved scope of work;
- Forms are not signed by an authorized person, or are signed by only one signatory;
- Reimbursement of awarded funds have been suspended due to a non-compliance issue such as failure to submit quarterly reports; or
- Reimbursements of awarded funds have been suspended due to noncompliance activities.

Sub-recipients can reduce the likelihood of delays in processing of payment requests by checking for accuracy prior to submission.

ARTICLE 3: AUDITING AND REPORTING REQUIREMENTS

A. Quarterly Reports. In accordance with 2 C.F.R. § 200.328, the Applicant shall submit quarterly reports to the NMDHSEM beginning with the first full quarter after the signature date on the Sub-recipient Grant Agreement. The NMDHSEM will provide sub-recipient a form for this report. Quarterly reports are due no later than the 15th of the month following the end of the quarter - January 15, April 15, July 15, and October 15.

In order that NMDHSEM may adequately evaluate the progress and status of each sub-grant, quarterly reports shall contain a description of the work accomplished to date, the methods and procedures used, the anticipated completion date, a summary of all project costs to date, and other such information as may be of assistance in its evaluation of the project.

Reports shall be sent to the Department of Homeland Security & Emergency Management, Recovery Unit, P.O. Box 27111, Santa Fe, NM 87502, or electronically to DHSEM.mitigation@dhsem.nm.gov.

B. Additional Reporting Requirements. The sub-recipient must immediately report in writing to the NMDHSEM Mitigation Unit any alleged acts or allegations of fraud or misappropriation of funds for

work authorized under this Sub-recipient Grant Agreement. This extends to reporting any legal action, lawsuit, bankruptcy, or other action that may jeopardize the successful completion of any authorized project. Additional reporting and financial reconciliation requirements may also be requested at NMDHSEM and FEMA's request. Failure to comply with these requests may jeopardize funding and may be a breach of this Sub-recipient Grant Agreement.

C. Enforcement. The NMDHSEM may suspend drawdowns, impose other special conditions, or take other authorized action pursuant to 2 C.F.R. § 200.339 (Remedies for Noncompliance) if the sub-recipient does not submit accurate and timely reports. This may include, among other things, the administrative closeout of a grant and/or any projects under a grant when the sub-recipient is not responsive to reasonable efforts NMDHSEM makes to collect required reports needed to complete closeout. Administrative closeout is a unilateral mechanism by NMDHSEM to move forward with project or grant closeout using available grant information in lieu of final reports. This can require NMDHSEM to make cash or cost adjustments and ineligible cost determinations, which may result in identifying a debt owed to FEMA and/or NMDHSEM.

D. Financial Procedures. The sub-recipient agrees to maintain financial procedures and support documents and to establish and maintain a proper accounting system to record expenditures of disaster assistance funds in accordance with generally accepted accounting principles or as directed by the Governor's Authorized Representative, to account for the receipt and expenditure of funds under this Agreement. If applicable, RECIPIENT / SUBGRANTEE shall conduct audit(s) pursuant to the Single Audit Act of 1984, 31 U.S.C. § 7501 et. seq., 44 C.F.R. Part 14, 2 C.F.R. Part 200, 0MB Circular A-133, "Audits of States, Local Governments, and Non-profit Organizations," and applicable New Mexico laws, rules and regulations. Further, sub-recipient must provide a hard copy of the Single Audit Report within sixty (60) days of the close of its fiscal year. Otherwise, pursuant to 44 C.F.R. § 13.43, NMDHSEM may withhold or suspend payments under any grant award.

The sub-recipient shall retain all financial records, supporting documents, statistical records, and any other documents pertinent to this contract for a period of five years after the date of submission of the final expenditures report. However, if litigation or an audit has been initiated prior to the expiration of the three-year period, the records shall be retained until the litigation or audit findings have been resolved.

E. Authorizing Statute. This award is made under the provisions of the Robert T. Stafford Disaster Relief and Emergency Assistance Act, Pub. L. No. 93-288 (1974) (codified as amended at 42 U.S.C. §§ 5121-5207) (Stafford Act), in accordance with 44 C.F.R. § 206.44.
All scopes of work and costs approved as a result of this Sub-recipient Grant Agreement, whether as estimates or final costs approved through subawards, PWs, or otherwise, will incorporate by reference the terms of this Sub-recipient Grant Agreement and must comply with applicable laws, regulations, policy, and guidance in accordance with this Sub-recipient Grant Agreement.

Pursuant to Executive Order 13858 Strengthening Buy-American Preferences for Infrastructure Projects, FEMA encourages recipients to use, to the greatest extent practicable and consistent with the law, iron and aluminum as well as steel, cement, and other manufactured products produced in the United States in Public Assistance and HMGP eligible public infrastructure repair and construction projects affecting surface transportation, ports, water resources including sewer and drinking water, and power. Such preference must be consistent with the law, including cost and contracting requirements at 2 C.F.R. Part 200.

F. Additional Terms and Conditions. The following additional sub-grant agreement documents are fully incorporated into this Sub-recipient Grant Agreement and thereby constitute additional terms and conditions of this agreement.

- The Stafford Act, its implementing regulations contained in Title 44 of the C.F.R., and FEMA policy and guidance.
- **Hazard Mitigation Assistance Guide (March 2023)**
- The Uniform Administrative Requirements, Cost Principles, and Audit Requirements for Federal Awards set forth at 2 C.F.R. Parts 200 and 3002.
- Attachment 1 United States Department of Homeland Security (USDHS) Standard Terms and Conditions (January 24, 2022) in effect on the date of the Declaration which are incorporated by reference into this Sub-recipient Grant Agreement
- Attachment 2 Reimbursement Checklist
- Attachment 3 Glossary and Definitions
- Attachment 4 Acronyms

ARTICLE 4: SCOPE OF WORK

A. As authorized by the Robert T. Stafford Disaster Relief and Emergency Assistance Act (the Stafford Act), as amended (42 U.S.C. § 5121 et seq.), and Section 662 of the Post Katrina Emergency Reform Act of 2006, as amended (6 U.S.C. § 762), the **City of Santa Fe.** The has been awarded funds for Critical Infrastructure Microgrids Scoping. Funds shall be utilized as outlined in the approved budget as awarded by FEMA on **2/15/2024**. The Sub Recipient shall match the Federal Award Amount of **$399,990.75**, with a local jurisdictional amount of **$125,008.25**, for a total project cost of **$524,999.00** All work performed pursuant to this agreement must comply with the approved FEMA application. All work must be completed within the performance period, between **2/15/2024 – 2/14/2027** The **City of Santa Fe** shall not sub-grant any part of this award to any other entity or organization. Within the first reporting quarter, all awards require confirmation that expenditures in the budget category toward this project will be made. If not, DHSEM may execute a de-obligation of Federal funds without recourse by the **City of Santa Fe.**

B. Approved projects must commence within the first reporting quarter. If a project cannot commence and be operational within the first reporting quarter of the approved award date, the sub–Recipient must submit a written statement to DHSEM, signed by the sub-recipient signatory officials, justifying the delay in implementation, the expected starting date, and a formal request to extend the project start date past the first reporting quarter. At the sole discretion of DHSEM, the grant award is subject to cancellation, and funds may be de-obligated and reallocated to other projects.

ARTICLE 5: PUBLICATIONS

A. Publications created with funding under this grant shall prominently contain the following statement or a DHSEM pre-approved modification: **This Document was prepared under a sub-grant from the FEDERAL EMERGENCY MANAGEMENT AGENCY, and the NEW MEXICO DEPARTMENT OF HOMELAND SECURITY AND EMERGENCY MANAGEMENT. Points of view or opinions expressed in this document are those of the authors and do not necessarily represent the official position or policies of the Federal Emergency Management Agency and the New Mexico Department of Homeland Security and Emergency Management.**

ARTICLE 6: PERFORMANCE PERIODS

The performance period for this sub-grant award is **2/15/2024 – 2/14/2027.** Further, all personnel-related grant activity must be completed between **2/15/2024 – 2/14/2027**. Funds may not be obligated outside of these time periods. An obligation occurs when funds are encumbered, as with a purchase order and/or commitment of salaries and benefits**. All obligated and encumbered funds *must be liquidated* within 45 days of the end of the performance period when the *Final Progress and Financial Reports* are due**.

ARTICLE 7: RECOVERY OF FUNDS FOR DUPLICATION OF BENEFITS AND INELIGIBLE ACTIVITIES

A. Ineligible Activities. The FEMA and/or NMDHSEM may disallow costs and recover funds based on the results of audit or review during or after performance of the award to ensure compliance with the terms of the Sub-recipient Grant Agreement and award document. The FEMA and/or NMDHSEM is required to recover funds when the sub-recipient has ineligible underruns (for example, actual costs for a PA large project are less than the amount awarded based on initial estimates); knowingly or negligently withholds or misrepresents material information; fails to complete work and comply with the terms of this Sub-recipient Grant Agreement or the approved award; expends federal funds in error; or incurs costs that are unreasonable or otherwise disallowed. If, after exhaustion of appeal rights, FEMA and/or NMDHSEM determines a debt is owed, the State has 30 days to resolve the amount owed before the debt is referred to the FEMA Finance Center for collection. The State may do so by directly paying FEMA. The State may also deposit the amount owed directly into the applicable subaccount in U.S. Health and Human Services (HHS)/Smartlink and notify FEMA when it has reimbursed that subaccount, after which FEMA will de-obligate that amount in the subaccount. Alternatively, the sub-recipient may request to substitute unallowable costs for other costs that are allowable (e.g., necessary, allocable, and reasonable under the same award and have not yet been reimbursed by FEMA).

B. Duplication of Benefits. In accordance with the provisions of 42 U.S.C. § 5155 (Section 312 of the Stafford Act), duplication of benefits is prohibited. The NMDHSEM must take all actions necessary and reasonable to ensure that all who receive federal assistance are aware of their responsibility to repay federal assistance that is duplicated by amounts available from insurance or any other source for the same purpose. The FEMA and/or NMDHSEM may at any time, pre-award or post-award, adjust the level of funding provided to account for financial assistance provided from any other source for the same purpose as the federal assistance or to account for benefits available for the same purpose from another source, irrespective of whether they are actually received. The sub-recipient shall notify NMDHSEM, as soon as practicable, of the existence of any insurance coverage for the costs identified in the application and of any entitlement to or recovery of funds from any other source for the project costs, including Small Business Administration funding, United States Department of Agriculture (USDA), and other Federal, State, and private funding. The amount of duplicate sources available shall reduce allowable costs. The sub-recipient shall be liable to NMDHSEM to the extent that the sub-recipient receives duplicate benefits from any other source for the same purposes for which the sub-recipient has received payment from the NMDHSEM.

C. Cooperation. The NMDHSEM agrees, on its behalf and on behalf of its political subdivisions and others that receive federal assistance, to cooperate with the Federal Government in seeking recovery of federal assistance against any party or parties whose intentional acts or omissions or whose negligence or other tortious conduct may have caused or contributed to the damage or hardship for which federal assistance was provided under this Sub-recipient Grant Agreement. If applicable, FEMA will treat recovered funds as duplicated benefits available to NMDHSEM/sub-recipient in accordance with Section 312 of the Stafford Act (codified as amended at 42 U.S.C. § 5155).

D. NMDHSEM Responsibilities. The NMDHSEM is responsible for recovering federal assistance expended in error, misrepresentation, fraud, or for costs otherwise disallowed or unused.

a. The NMDHSEM must notify FEMA of any potential debt as a result of federal funds expended in error, misrepresentation, fraud, or for costs otherwise disallowed or unused.

b. The NMDHSEM must report all cases of suspected fraud to the USDHS Office of Inspector General. The NMDHSEM must cooperate with any investigation conducted by the USDHS Office of Inspector General. The NMDHSEM must cooperate with FEMA regarding any and all lawsuits that may result from the NMDHSEM or FEMA's attempt to recover funds or disallow costs.

E. Statute of Limitations. The 3-year statute of limitations limiting FEMA's ability to initiate an administrative action to recover funds paid as provided for in Section 705(a) of the Stafford Act (codified as amended at 42 U.S.C. § 5205(a)) begins with:

a. Initiation of an Administrative Action to Recover Payment. The initiation of an administrative action to recover payment includes FEMA's written notice to the NMDHSEM or a sub-recipient of a questioned or disallowed cost or improper payment (including a request for information concerning such cost or payment) and written notice to the NMDHSEM or a sub-recipient of a FEMA or 3rd party review or audit.

F. Refunds, Rebates, and Credits. The NMDHSEM must transfer to FEMA the appropriate share, based on the federal support percentage, of any refund, rebate, credit or other amounts arising from the performance of this Sub-recipient Grant Agreement. The NMDHSEM must take necessary action to promptly collect all monies due or which may become due and if applicable, to cooperate with the Federal Government in any claim or suit in connection with amounts due.

G. Non-Compliant Sub-recipients. As per 2 C.F.R. §§ 200.207, 200.303(d) and 200.338(A-F), NMDHSEM can selectively use any or all the following remedies and prompt actions for non-compliance with any term of an award to include audit finding(s):

a. Increased monitoring of projects and require additional financial and performance reports.
b. Disallow advance payment process.
c. Temporarily withhold payments pending correction of the deficiency.
d. Disallow or deny use of funds and matching credit for all or part of the cost of the activity or action not in compliance.
e. Request FEMA to completely or partially de-obligate funding for a project.
f. Temporarily withhold payments pending correction of the deficiency by the sub-recipient.
g. Withhold further awards for the grant program.
h. Take other programmatic or legally available remedies.

ARTICLE 8: CONSTRUCTION REQUIREMENTS

A. The NMDHSEM must ensure that all applicable federal, state, and local permits and approvals are obtained, and all permit conditions are addressed before the start of any construction activity, including FEMA and NMDHSEM/sub-recipient compliance with the National Environmental Policy Act, the National Historic Preservation Act, the Endangered Species Act, and all other applicable environmental laws and executive orders. All construction should be in accordance with approved permits, projects plans and specifications, applicable building codes, and program guidance.

ARTICLE 9: NATIONAL ENVIRONMENTAL POLICY ACT (NEPA)/ENVIRONMENTAL PLANNING AND HISTORIC PRESERVATION (EHP) COMPLIANCE

A. The sub-recipient must provide information to FEMA the legally required environmental planning and historic preservation (EHP) review and to ensure compliance with the applicable EHP laws and Executive Orders (EO). These EHP requirements include but are not limited to National Environmental Policy Act, National Historic Preservation Act, Endangered Species Act, E 11988 Floodplain Management, EO 11990 Protection of Wetlands, and EO 12898 Environmental Justice. The sub-recipient must comply with all federal, state, local, tribal, and territorial EHP requirements and obtain applicable permits and clearances.

B. Sub-recipients shall not undertake any activity from the project that would result in ground disturbance, facility modification, or relates to the use of sonar equipment without the prior approval of FEMA. These

include but are not limited to communications towers, physical security enhancements involving ground disturbance, new construction, and modifications to buildings that are 50 years old or older, and exercises. The sub-recipient must comply with all mitigation or treatment measures required for the project as the result of FEMA's EHP review. An EHP Screening Form does not need to be provided for those exercises that are planned to take place at previously approved facilities, such as, fire and police academies, search and rescue training facilities, and explosive testing centers. Any type of exercise that requires any type of land, water, or vegetation disturbance or building of temporary structures must undergo an EHP review.

C. Any change to an approved project description will require re-evaluation for compliance with EHP requirements before the project can proceed. If ground disturbing activities occur during project implementation, the sub-recipient must ensure monitoring of ground disturbance and if any potential archeological resources are discovered, the sub-recipient will immediately cease construction in that area and notify NMDHSEM, FEMA and the New Mexico Historic Preservation Division. Initiation of these activities prior to completion of FEMA's EHP review will result in a non-compliance finding and may result in ineligibility of grant funding.

ARTICLE 10: PROPERTY AND EQUIPMENT MANAGEMENT

A. The sub-recipient will follow the property standards articulated in 2 C.F.R. § 200.310 through 2 CFR 200.326. The sub-recipient shall, when practical, prominently display the following on any equipment purchased with award funds: **PURCHASED WITH FUNDS PROVIDED BY THE FEDERAL EMERGENCY MANAGEMENT AGENCY.** No equipment purchased with these grant funds may be assigned to other entities or organizations without the expressed approval in writing from DHSEM prior to the jurisdiction's encumbrance or expenditure for that equipment.

B. The subrecipient will follow the property standards articulated in 2 C.F.R. § 200.310 through 2 C.F.R. § 200.326. The subrecipient shall maintain an effective property management system; safeguards to prevent loss, damage or theft; maintenance procedures to keep equipment in good condition; and disposition procedures. A Property Inventory Report shall be submitted to NMDHSEM annually each January 30 with the Financial Progress Report during the performance period, and continued submission is required annually until final disposition of the equipment. The subrecipient shall, when practical, prominently display the following on any equipment purchased with award funds: Purchased with funds provided by the U.S. Department of Homeland Security. No equipment purchased with these grant funds may be assigned to other entities or organizations without the expressed approval in writing from NMDHSEM, prior to the jurisdiction's encumbrance or expenditure for that equipment.

C. Any disposition of property or equipment must be in accordance with 2 C.F.R. § 200.313(e) and pre-approved by FEMA through NMDHSEM.

ARTICLE 11: SUBRECIPIENT MONITORING POLICY

A. In accordance with 2 C.F.R. § 200.328, NMDHSEM may periodically monitor a sub-recipient's projects to ensure that program goals, objectives, timelines, budgets, and other related program criteria are being met. The NMDHSEM reserves the right to periodically review and conduct analysis of the sub-recipient's financial, programmatic, and administrative policies and procedures. This monitoring may include review of accounting for receipts and expenditures, cash management, maintaining adequate financial records, means of allocating and tracking costs, contracting, procurement, records management, payroll, means of allocating staff costs, property and equipment management system, progress of project activities, etc. This may include unscheduled desk audits and field inspections. The sub-recipient shall accommodate all such requests within reason. If the sub-recipient encounters any unanticipated problem with the Scope of Work, allowed costs, procurement, permitting, or other difficulty, the sub-recipient must communicate that

problem to NMDHSEM promptly. Work on affected projects must be suspended until the problem is resolved. Technical assistance is available from NMDHSEM staff.

B. The sub-recipient will immediately, no later than 24-hours upon notice, report to NMDHSEM allegations of wrong-doing on the part of any contractor, sub-contractor, agent or employee of the sub-recipient, or other interested party in reference to the work authorized under this Sub-recipient Grant Agreement. This extends to any legal action, lawsuit, bankruptcy, or other action that may jeopardize the successful completion of any authorized project.

ARTICLE 12: PROCUREMENT

A. Procurement shall comply with all federal, state, and local procurement requirements including 2 C.F.R. § 200.320 and the New Mexico Procurement Code for expenditure of funds under this Agreement. The Applicant must conform to applicable state and federal law and the Procurement Standards Sections 2 C.F.R. § 200.317-326, and Appendix II. Contractors that develop or draft specifications, requirements, Statements of Work, and/or Requests for Proposals (RFP) for a proposed procurement shall be excluded from bidding or submitting a proposal to compete for the award of such procurement. Local bidder's preference is not allowed for federally funded procurements. Procurement transactions shall be conducted to provide maximum open and free competition.

B. When procuring property and services under this agreement, the sub-recipient will follow 2 C.F.R. § 200.318 through 2 C.F.R. § 200.326 and Appendix II. The sub-recipient must use its own documented procurement procedures which reflect applicable state, local, tribal, and territorial laws, and regulations, provided that the procurements conform to applicable federal law and the standards identified in 2 C.F.R. § 200. As such, the sub-recipient must use one of the methods of procurement identified in 2 C.F.R. § 200.320.

C. Also, per 2 C.F.R. § 200.318(i), subrecipients are required to maintain and retain records sufficient to detail the history of procurement covering at least the rationale for the procurement method, selection of contract type, contractor selection or rejection, and the basis for the contract price. States and territories are encouraged to maintain and retain this information as well and are reminded that in order for any cost to be allowable, it must be adequately documented per 2 C.F.R. § 200.403(g). Examples of the types of documents that would cover this information include but are not limited to:

- **a.** Solicitation documentation, such as requests for quotes, invitations for bids, or requests for proposals;
- **b.** Responses to solicitations, such as quotes, bids, or proposals;
- **c.** Pre-solicitation independent cost estimates and post-solicitation cost/price analyses on file for review by federal personnel, if applicable;
- **d.** Contract documents and amendments, including required contract provisions; and
- **e.** Other documents required by federal regulations applicable at the time a subgrant is awarded to a subrecipient.

D. Procurement from Minority Owned and Women Owned Business is encouraged and must be tracked and reported to NMDHSEM on the quarterly reports. Procurement transactions shall be conducted to provide maximum open and free competition. Each sole–source procurement single vendor response to a competitive bid, and all purchases require prior approval of NMDHSEM.

E. The sub-recipient will follow the property standards articulated in 2 C.F.R. § 200.310 through 2 C.F.R. § 200.326. The sub-recipient shall maintain an effective property management system; safeguards to prevent loss, damage or theft; maintenance procedures to keep equipment in good condition; and disposition procedures. Property and equipment records shall be maintained for a period of three years following the final disposition, replacement or transfer of the property and equipment.

ARTICLE 13: CONTRACTS

A. Contractors that develop or draft specifications, requirements, Statements of Work, and/or Requests for Proposals (RFP) for a proposed procurement shall be excluded from bidding or submitting a proposal to compete for the award of such procurement. Local bidder's preference is not allowed for federally funded procurements. Procurement transactions shall be conducted to provide maximum open and free competition. Each sole–source procurement, single vendor response to a competitive bid, and all purchases require prior approval of DHSEM.

B. Any contract shall comply with the requirements of Procurement Standards Sections of 28 C.F.R. Parts 66 and 70, 2 C.F.R. Part 200 and OMB Circulars A–102 "Uniform Administrative Requirements for Grants and Cooperative Agreements with State and Local Governments" for expenditure of Federal funds under this Sub-recipient Grant Agreement. Applicants shall submit procurement and contracts to NMDHSEM for review prior to approval. Contracts for professional services must meet applicable local, state, and federal requirements. All contractors must be licensed in New Mexico for the type of work that is required. Prior to any contracted work beginning, the sub-recipient shall provide NMDHSEM with a copy of the contractor's license. Contract work must not exceed the scope of work and PW awarded amount prescribed by FEMA, unless requested through a scope of work change and approval from FEMA.

C. Any contract entered during this sub-grant period shall comply with local, State, and Federal government contracting regulations. Professional and consultant services contracts must include local, State, and Federal government-required contract language, a project budget, SOW, and a pay schedule. ***All contracts require pre-approval by DHSEM prior to execution.*** Contract deliverables must meet the intent of the grant application and grant requirements. Justification is required for compensation for individual consultant services, which must be reasonable and consistent with the amount paid for similar services in the marketplace. Detailed invoices and time and effort reports are required for consultants.

ARTICLE 14: COMPETITION AND CONFLICTS OF INTEREST

A. Among the requirements of 2 C.F.R. § 200.319(b) applicable to all non-federal entities other than states, in order to ensure objective contractor performance and eliminate unfair competitive advantage, contractors that develop or draft specifications, requirements, statements of work, or invitations for bids or requests for proposals must be excluded from competing for such procurements. The FEMA considers these actions to be an organizational conflict of interest and interprets this restriction as applying to contractors that help a subrecipient develop its grant application, project plans or project budget. This prohibition also applies to the use of former employees to manage the grant or carry out a contract when those former employees worked on such activities while they were employees of the non-federal entity.

B. Under this prohibition, unless the subrecipient solicits for and awards a contract covering both development and execution of specifications (or similar elements as described above), and this contract was procured in compliance with 2 C.F.R. §§ 200.317 – 200.327, federal funds cannot be used to pay a contractor to carry out the work if that contractor also worked on the development of those specifications. This rule applies to all contracts funded with federal grant funds, including pre-award costs, such as grant writer fees, as well as post-award costs, such as grant management fees. Additionally, some of the situations considered to be restrictive of competition include, but are not limited to:

- **a.** Placing unreasonable requirements on firms for them to qualify to do business;
- **b.** Requiring unnecessary experience and excessive bonding;
- **c.** Noncompetitive pricing practices between firms or between affiliated companies;
- **d.** Noncompetitive contracts to consultants that are on retainer contracts;
- **e.** Organizational conflicts of interest;

f. Specifying only a "brand name" product instead of allowing "an equal" product to be offered and describing the performance or other relevant requirements of the procurement; and

g. Any arbitrary action in the procurement process.

C. Per 2 C.F.R. § 200.319(c), the subrecipient must conduct procurements in a manner that prohibits the use of statutorily or administratively imposed state, local, tribal, or territorial geographical preferences in the evaluation of bids or proposals, except in those cases where applicable federal statutes expressly mandate or encourage geographic preference. Nothing in this section preempts state licensing laws. **When contracting for architectural and engineering services, geographic location may be a selection criterion, provided its application leaves an appropriate number of qualified firms, given the nature and size of the project, to compete for the contract.**

D. Under 2 C.F.R. § 200.318(c)(1), the subrecipient is required to maintain written standards of conduct covering conflicts of interest and governing the actions of their employees engaged in the selection, award, and administration of contracts. **No employee, officer, or agent may participate in the selection, award, or administration of a contract supported by a federal award if he or she has a real or apparent conflict of interest.** Such conflicts of interest would arise when the employee, officer or agent, any member of his or her immediate family, his or her partner, or an organization that employs or is about to employ any of the parties indicated herein, has a financial or other interest in or a tangible personal benefit from a firm considered for a contract. The non-federal entity's officers, employees, and agents may neither solicit nor accept gratuities, favors, or anything of monetary value from contractors or parties to subcontracts. However, subrecipient entities may set standards for situations in which the financial interest is not substantial, or the gift is an unsolicited item of nominal value. The standards of conduct must provide for disciplinary actions to be applied for violations of such standards by officers, employees, or agents of the non-federal entity.

E. Under 2 C.F.R. § 200.318(c)(2), if the subrecipient has a parent, affiliate, or subsidiary organization that is not a state, local, tribal or territorial government, the subrecipient must also maintain written standards of conduct covering organizational conflicts of interest. In this context, organizational conflict of interest means that because of a relationship with a parent company, affiliate, or subsidiary organization, the subrecipient is unable or appears to be unable to be impartial in conducting a procurement action involving a related organization. The non-federal entity must disclose in writing any potential conflicts of interest to FEMA or NMDHSEM in accordance with applicable FEMA policy.

ARTICLE 15: CONTRACTS

A. Contracts for professional and consultant services executed during this grant period must include federal, state, local, tribal, and territorial government required contract language, a project budget, and require pre-approval by NMDHSEM prior to implementation. Contract deliverables must meet the intent of the grant application and grant requirements. Justification is required for compensation for individual consultant services, which must be reasonable and consistent with the amount paid for similar services in the marketplace. Detailed invoices and time and effort reports are required for consultants. *See* 2 C.F.R. § 200.1, 2 C.F.R. § 200 Appendix II to Part 200.

ARTICLE 16: AUDIT REQUIREMENTS

A. As a federal grant recipient, the State of New Mexico requires a sub-recipient expending $750,000 or more in federal funds in the organization's fiscal year to conduct an organization–wide audit in accordance with the Single Audit described in 2 C.F.R. § 200.501. The sub-recipient will permit state or federal officials and auditors to have access to sub-recipient and contractor records and financial statements as necessary for

the state to comply with 2 C.F.R. § 200.501. Copies of audit findings must be submitted to NMDHSEM within 30 days after the sub-recipient receives its audit report, or within a 9-month period of the grant closeout date, whichever is earlier. Include the federal agency name, program, grant number, the CFDA title and number, and the name of the pass-through agency (NMDHSEM) in all documents.

ARTICLE 17: RECORDS RETENTION

A. Records Retention.

a. **State Requirement.** The State must retain records for three years after all projects are complete and the federal disaster is formally closed out, except in certain rare circumstances described in 2 C.F.R. § 200.334 (Retention requirements for records), from the date it submits the final Federal Financial Report (SF-425) to FEMA in compliance with 2 C.F.R. § 200.334. If FEMA administratively closes the grant where no final SF-425 was submitted, FEMA uses the date the grant was administratively closed as the start date for the three-year record retention period.

b. **Sub-recipient Requirement.** The sub-recipients must retain project or subaward records for at least three years from the date that the NMDHSEM submits to FEMA the final expenditure report for a project or subaward. If, however, there is any litigation, claim, negotiation, audit, request for information, or other action involving the project or subaward that starts before that date, the records must be retained until completion of the action and resolution of all issues which arise from it, or until the end of the three-year period, whichever is later.

c. The sub-recipient will follow the record retention and access standards articulated in 2 C.F.R. § 200.333 through 2 C.F.R. § 200.337. The grant financial and administrative records shall be maintained for a period of three years following the date of the closure of the grant award, or audit if required. Time and effort, personnel and payroll records for all individuals reimbursed under the award must be maintained. Property and equipment records shall be maintained for a period of three years following the final disposition, replacement or transfer of the property and equipment.

d. The sub-recipient will be required to maintain project records until the expiration of the appropriate retention period. This includes records related to Management Costs, procurement, contracting, accounts payable, engineering, inventory, force account (materials, labor, and equipment), insurance settlements or other records related to the project scope of work. Retention procedures are outlined in the Hazard Mitigation Assistance Grant Programs Administrative Plan.

ARTICLE 18: CHANGES TO AWARD

A. All change requests must be submitted either in writing or electronically to the NMDHSEM contact for review 90 days prior to the termination of this Sub-recipient Grant Agreement. All change requests must be accompanied by a justification narrative and a budget and spending plan. All change requests must be consistent with the scope of the project and grant guidelines. Change requests will be considered only if reporting requirements are current, and all other terms and conditions of this Sub-recipient Grant Agreement have otherwise been met at the time of the request. If approved by NMDHSEM and FEMA, changes in the programmatic activities, purpose of the project, key personnel specified on the grant award, contractual services for activities central to the purposes of the award, change in project site, or release of special conditions, will result in an amendment to this award. Requests for changes must be formally submitted to NMDHSEM and FEMA.

B. Changes to this Sub-recipient Grant Agreement will be made via a Sub-recipient Grant Agreement Amendment. The NMDHSEM will prepare each Amendment when needed. No Sub-recipient Grant

Agreement Amendment is valid until fully executed.

ARTICLE 19: REMEDIES FOR NONCOMPLIANCE

A. For the reasons listed below, special conditions may be imposed, reimbursements may be partially or wholly withheld, the award may be wholly or partly suspended or terminated, or future awards, reimbursements and award modifications may be withheld. The NMDHSEM may institute the following, but is not limited to, withholding authority to proceed to the next phase of a project, requiring additional or more detailed financial reports, additional project monitoring, and/or establish additional prior approvals. The NMDHSEM shall notify the sub-recipient of its decision in writing stating the nature and the reason for imposing the conditions/restrictions, the corrective action required and timeline to remove them, and the method of requesting reconsideration of the imposed conditions/restrictions. The sub-recipient must respond within five days of receipt of notification.

- **a.** Unwillingness or inability to attain project goals or scope of work.
- **b.** Unwillingness or inability to adhere to Special Conditions of this Sub-recipient Grant Agreement.
- **c.** Failure or inability to adhere to grant guidelines and federal compliance requirements.
- **d.** Improper procedures regarding contracts and procurements.
- **e.** Failure to submit reliable and/or timely reports.
- **f.** Fiscal management which does not meet reasonable professional standards.
- **g.** Failure or inability to adhere to the terms and conditions of this Sub-recipient Grant Agreement.
- **h.** Unwillingness or inability to obtain permits required by law to perform the eligible work.
- **i.** Noncompliance with any and all federal, state, local and tribal grant requirements.

B. The NMDHSEM shall notify the sub-recipient of any non-compliance issues in writing and shall attempt to arrive at a resolution in a timely and reasonable fashion. If corrective action is required, NMDHSEM and the sub-recipient shall determine a timeline and landmarks for remediation. The NMDHSEM may require additional detailed financial reports or additional project monitoring. The ultimate penalty for non-compliance with the terms and conditions of this Sub-recipient Grant Agreement is for payments to be withheld or for the award to be suspended or terminated. The sub-recipient agrees to make restitution if necessary.

C. The NMDHSEM may take action as it determines appropriate under the circumstances including but not limited to withholding of payments, disallowance of costs, suspension or termination of the award if the sub-recipient fails to comply with applicable Federal and State statutes, regulations, or the terms of this Sub-recipient Grant Agreement pursuant to 2 C.F.R. § 200.339.

D. Nothing in this section abrogates the sub-recipient's right of appeal.

ARTICLE 20: TERMINATION

A. **For Cause:** In compliance with 2 C.F.R. § Part 200.340(a)(1), if performance is not occurring as agreed, the award may be reduced or terminated without compensation for reduction or termination costs. The NMDHSEM will provide notice of five days to the subrecipient stating the reasons for the action, steps taken to correct the problems, and the commencement date of the reduction or termination. The NMDHSEM will reimburse the subrecipient only for acceptable work or deliverables, necessary and allowable costs incurred through the date of reduction or termination. Final payment may be withheld at the discretion of NMDHSEM until completion of a final NMDHSEM review. Disposition of any equipment acquired under a terminated grant must be in accordance with 2 C.F.R. § 200.313(e).

B. For Convenience: In compliance with 2 CFR Part 200.340(a)(4), this Agreement may be terminated without cause by the subrecipient upon written notice setting forth the reasons for such termination, and the effective date at least 30 days prior to the intended date of termination. A termination pursuant to this provision does not nullify a party's obligations for performance, or liabilities for failure to perform already incurred prior to the date of termination. Any project may be terminated upon convenience, in whole or in part, for the convenience of the subrecipient; though a partial termination notification must specify that portion of the project which is to be terminated. Allowable costs obligated and/or incurred through the date of termination shall be reimbursed. Disposition of any equipment acquired under a terminated grant must be in accordance with 2 C.F.R. § 200.313(e).

ARTICLE 21: CLOSEOUT OF SUB-GRANT

A. Closeout of Projects. Per 2 C.F.R. § 200.344, sub-recipients must submit all cost and supporting documentation for completed projects. The NMDHSEM will review and verify all costs and supporting documents to validate compliance. Failure to comply will result in de-obligation of the project. The NMDHSEM will close each sub-recipient file once it has conducted full review and approval of all supporting documents for compliance and all projects are completed and has project activity closed out.

a. **Management Costs.** Management Costs will be used for internal staff salaries, contractor payments and other support costs associated with this grant. This will be in accordance with all laws, rules, and FEMA regulations. Management Costs will be processed in accordance with the Hazard Mitigation Assistance Program and Policy Guide.

The NMDHSEM commits to closeout of all grants regardless of the availability of management costs.

ARTICLE 22: SPECIAL CONDITIONS

A. The terms of this Sub-recipient Grant Agreement are contingent upon sufficient appropriations and authorizations being made by the USDHS FEMA under the Robert T. Stafford Disaster Relief and Emergency Assistance Act U.S.C. §§ 5121-5207. If sufficient appropriations and authorizations are not made by FEMA this Sub-recipient Grant Agreement shall terminate immediately upon written notice being given by NMDHSEM to the sub-recipient. The decision of NMDHSEM shall be final.

B. If NMDHSEM proposes an Amendment to the Sub-recipient Grant Agreement to unilaterally reduce funding, the sub-recipient shall have the option to terminate the Sub-recipient Grant Agreement or agree to the reduced funding within 30 days of receipt of the proposed Amendment.

C. Each party shall be solely responsible for fiscal or other sanctions occasioned because of its own violation of requirements applicable to the performance of this Sub-recipient Grant Agreement. Each party shall be liable for its own actions or inactions in accordance with state law and nothing herein shall be deemed a waiver, indemnity or to otherwise create or effect liabilities between the parties.

D. The grant award amount is a funding allocation and is not to be interpreted as expenditure authorizations or approvals.

E. All awarded projects must be planned for, conducted, budgeted, and expended within the designated performance period.

F. Quarterly financial and progress reports are due on October 15, January 15, April 15, and July 15, within the POP. Final reports are due 15 days after the end of POP.

G. All revision requests must be reviewed and approved by NMDHSEM staff. All requests must meet the original scope of the project which may result in a sub-recipient grant amendment.

H. A revision of a project's SOW must be pre-approved by NMDHSEM staff before the jurisdiction can proceed with the request for approval process. If the revision is approved, NMDHSEM staff may request additional documentation to proceed with recommendation to NMDHSEM Leadership for final approval.

I. The beneficiary of this award is solely responsible for all expenditures that are incurred outside of the award performance period. All expenditures that are incurred above and beyond the amount of this Sub-recipient Grant Agreement are the sole responsibility of the sub-recipient of this award.

J. Procurement from Minority Owned and Women Owned Business is encouraged and must be tracked and reported to NMDHSEM on the quarterly reports.

K. Upon completion of all awarded projects, any remaining funds will be de-obligated and reverted to NMDHSEM for return to FEMA.

L. Extensions due to exigent or emergency circumstances will be determined by NMDHSEM on a case-by-case basis.

State of New Mexico
Department of Homeland Security & Emergency Management
P.O. Box 27111
Santa Fe, NM 87502

The acceptance of a subgrant from the United States and the State of New Mexico creates a legal duty and obligation on the part of the sub-recipient to use the funds or property made available in accordance with the conditions of the grant as administered by and through the New Mexico Department of Homeland Security and Emergency Management. By signing this obligating award document, the sub-recipient certifies it has read, understood, and accepted these documents as binding.

SUB-RECIPIENT GRANT AGREEMENT
Signatures of Acceptance

SUB-GRANT NO:			
JURISDICTION GRANT PROGRAM MANAGER PRINTED NAME:			
OFFICIAL SIGNATURE:		**DATE:**	
CONTACT NUMBER:		**E-MAIL ADDRESS:**	
JURISDICTION CHIEF FINANCIAL OFFICER PRINTED NAME:			
OFFICIAL SIGNATURE:		**Date:**	
CONTACT NUMBER:		**E-MAIL ADDRESS:**	
JURISDICTION SIGNATORY OFFICIAL PRINTED NAME:			
OFFICIAL SIGNATURE:		**DATE:**	
CONTACT NUMBER:		**E-MAIL ADDRESS:**	
NMDHSEM MITIGATION PROGRAM BUREAU CHIEF PRINTED NAME:			
NMDHSEM MITIGATION PROGRAM BUREAU CHIEF OFFICIAL SIGNATURE / DATE:			
NMDHSEM GRANTS MANAGEMENT BUREAU CHIEF PRINTED NAME:			
NMDHSEM GRANTS MANAGEMENT BUREAU CHIEF OFFICIAL SIGNATURE / DATE:			
NMDHSEM DEPUTY CABINET SECRETARY OFFICIAL PRINTED NAME:			
NMDHSEM DEPUTY CABINET SECRETARY OFFICIAL SIGNATURE / DATE:			

Print one original agreement, sign and email to: DHSEM.MITIGATION@DHSEM.nm.gov

CITY OF SANTA FE:

_____
ALAN WEBBER, MAYOR

DATE:_____

ATTEST:

_____
CITY CLERK

CITY ATTORNEY'S OFFICE:

_____
ASSISTANT CITY ATTORNEY

APPROVED FOR FINANCES:

Emily K. Oster 11/01/2024
_____
FINANCE DIRECTOR

The page is intentionally left blank.

ATTACHMENT 1
USDHS Standard Terms and Conditions
(January 24, 2022)

The Fiscal Year (FY) 2022 USDHS Standard Terms and Conditions apply to all new federal financial assistance awards funded in FY 2022. These terms and conditions flow down to sub-recipients unless an award term or condition specifically indicates otherwise. The United States has the right to seek judicial enforcement of these obligations.

All legislation and digital resources are referenced with no digital links. The FY 2022 USDHS Standard Terms and Conditions will be housed on dhs.gov at www.dhs.gov/publication/fy15-dhs- standard-terms-and-conditions.

A. Assurances, Administrative Requirements, Cost Principles, Representations and Certifications

I. USDHS financial assistance recipients must complete either the Office of Management and Budget (OMB) Standard Form 424B Assurances – Non-Construction Programs, or OMB Standard Form 424D Assurances – Construction Programs, as applicable. Certain assurances in these documents may not be applicable to your program, and the USDHS financial assistance office (USDHS FAO) may require applicants to certify additional assurances. Applicants are required to fill out the assurances as instructed by the awarding agency.

II. USDHS financial assistance recipients are required to follow the applicable provisions of the Uniform Administrative Requirements, Cost Principles, and Audit Requirements for Federal Awards located at Title 2, Code of Federal Regulations (C.F.R.) Part 200 and adopted by USDHS at 2 C.F.R. Part 3002.

III. By accepting this Agreement, recipients, and their executives, as defined in 2 C.F.R. § 170.315, certify that their policies are in accordance with OMB's guidance located at 2 C.F.R. Part 200, all applicable federal laws, and relevant Executive guidance.

B. General Acknowledgements and Assurances

All recipients, sub-recipients, successors, transferees, and assignees must acknowledge and agree to comply with applicable provisions governing USDHS access to records, accounts, documents, information, facilities, and staff.

I. Recipients must cooperate with any USDHS compliance reviews or compliance investigations conducted by USDHS.

II. Recipients must give USDHS access to examine and copy records, accounts, and other documents and sources of information related to the federal financial assistance award and permit access to facilities or personnel.

III. Recipients must submit timely, complete, and accurate reports to the appropriate USDHS officials and maintain appropriate backup documentation to support the reports.

IV. Recipients must comply with all other special reporting, data collection, and evaluation requirements, as prescribed by law, or detailed in program guidance.

V. Recipients (as defined in 2 C.F.R. Part 200 and including recipients acting as pass-through entities) of federal financial assistance from USDHS or one of its awarding component agencies must complete the USDHS Civil Rights Evaluation Tool within thirty (30) days of receipt of the Notice of Award for the first award under which this term applies. Recipients of multiple awards of USDHS financial assistance should only submit one completed tool for their organization, not per award. After the initial submission, recipients are required to complete the tool once every two (2) years if they have an active award, not every time an award is made. Recipients should submit the completed tool, including supporting materials, to CivilRightsEvaluation@hq.dhs.gov. This tool clarifies the civil rights obligations and related reporting requirements contained in the USDHS

Standard Terms and Conditions. Sub-recipients are not required to complete and submit this tool to USDHS. The evaluation tool can be found at https://www.dhs.gov/publication/dhs- civil-rights-evaluation-tool.

The USDHS Office for Civil Rights and Civil Liberties will consider, in its discretion, granting an extension if the recipient identifies steps and a timeline for completing the tool. Recipients should request extensions by emailing the request to CivilRightsEvaluation@hq.dhs.gov prior to expiration of the 30-day deadline.

C. Standard Terms & Conditions

I. Acknowledgement of Federal Funding from USDHS

Recipients must acknowledge their use of federal funding when issuing statements, press releases, requests for proposal, bid invitations, and other documents describing projects or programs funded in whole or in part with federal funds.

II. Activities Conducted Abroad

Recipients must ensure that project activities performed outside the United States are coordinated as necessary with appropriate government authorities and that appropriate licenses, permits, or approvals are obtained.

III. Age Discrimination Act of 1975

Recipients must comply with the requirements of the Age Discrimination Act of 1975, Public Law 94-135 (1975) (codified as amended at Title 42, U.S. Code, § 6101 et seq.), which prohibits discrimination on the basis of age in any program or activity receiving federal financial assistance.

IV. Americans with Disabilities Act of 1990

Recipients must comply with the requirements of Titles I, II, and III of the Americans with Disabilities Act, Pub. L. 101-336 (1990) (codified as amended at 42 U.S.C. §§ 12101– 12213), which prohibits recipients from discriminating on the basis of disability in the operation of public entities, public and private transportation systems, places of public accommodation, and certain testing entities.

V. Best Practices for Collection and Use of Personally Identifiable Information

Recipients who collect personally identifiable information (PII) are required to have a publicly available privacy policy that describes standards on the usage and maintenance of the PII they collect. USDHS defines PII as any information that permits the identity of an individual to be directly or indirectly inferred, including any information that is linked or linkable to that individual. Recipients may also find the USDHS Privacy Impact Assessments: Privacy Guidance and Privacy Template as useful resources respectively.

VI. Civil Rights Act of 1964 – Title VI

Recipients must comply with the requirements of Title VI of the Civil Rights Act of 1964 (codified as amended at 42 U.S.C. § 2000d et seq.), which provides that no person in the United States will, on the grounds of race, color, or national origin, be excluded from participation in, be denied the benefits of, or be subjected to discrimination under any program or activity receiving federal financial assistance. USDHS implementing regulations for the Act are found at 6 C.F.R. Part 21 and 44 C.F.R. Part 7.

VII. Civil Rights Act of 1968

Recipients must comply with Title VIII of the Civil Rights Act of 1968, Pub. L. 90-284, as amended through Pub. L. 113-4, which prohibits recipients from discriminating in the sale, rental, financing, and advertising of dwellings, or in the provision of services in connection therewith, on the basis of race, color, national origin, religion, disability, familial status, and sex (see 42 U.S.C. § 3601 et seq.), as implemented by the U.S. Department of Housing and Urban Development at 24 C.F.R. Part 100. The prohibition on disability discrimination includes the requirement that new multifamily housing with four or more dwelling units—i.e., the public and common use areas and individual apartment units (all units in buildings with elevators and ground-floor units in buildings without elevators)—be designed and constructed with certain accessible features. (See 24 C.F.R. Part 100, Subpart D.)

VIII. Copyright

Recipients must affix the applicable copyright notices of 17 U.S.C. §§ 401 or 402 and an acknowledgement of U.S. Government sponsorship (including the award number) to any work first produced under federal financial assistance awards.

IX. Debarment and Suspension

Recipients are subject to the non-procurement debarment and suspension regulations implementing Executive Orders (E.O.) 12549 and 12689, which are at 2 C.F.R. Part 180 as adopted by USDHS at 2 C.F.R. Part 3002. These regulations restrict federal financial assistance awards, subawards, and contracts with certain parties that are debarred, suspended, or otherwise excluded from or ineligible for participation in federal assistance programs or activities.

X. Drug-Free Workplace Regulations

Recipients must comply with drug-free workplace requirements in Subpart B (or Subpart C, if the recipient is an individual) of 2 C.F.R. Part 3001, which adopts the Government-wide implementation (2 C.F.R. Part 182) of Sec. 5152-5158 of the Drug-Free Workplace Act of 1988 (41 U.S.C. §§ 8101-8106).

XI. Duplication of Benefits

Any cost allocable to a particular federal financial assistance award provided for in 2 C.F.R. Part 200, Subpart E may not be charged to other federal financial assistance awards to overcome fund deficiencies; to avoid restrictions imposed by federal statutes, regulations, or federal financial assistance award terms and conditions; or for other reasons. However, these prohibitions would not preclude recipients from shifting costs that are allowable under two or more awards in accordance with existing federal statutes, regulations, or the federal financial assistance award terms and conditions may not be charged to other federal financial assistance awards to overcome fund deficiencies; to avoid restrictions imposed by federal statutes, regulations, or federal financial assistance award terms and conditions; or for other reasons.

XII. Education Amendments of 1972 (Equal Opportunity in Education Act) – Title IX

Recipients must comply with the requirements of Title IX of the Education Amendments of 1972, Pub. L. 92-318 (1972) (codified as amended at 20 U.S.C. § 1681 et seq.), which provide that no person in the United States will, on the basis of sex, be excluded from participation in, be denied the benefits of, or be subjected to discrimination under any educational program or activity receiving federal financial assistance. USDHS implementing regulations are codified at 6 C.F.R. Part 17 and 44 C.F.R. Part 19.

XIII. Energy Policy and Conservation Act

Recipients must comply with the requirements of the Energy Policy and Conservation Act, Pub. L. 94- 163 (1975) (codified as amended at 42 U.S.C. § 6201 et seq.), which contain policies relating to energy efficiency that are defined in the state energy conservation plan issued in compliance with this Act.

XIV. Ensuring the Future is Made in All of America by All of America's Workers

Recipients must comply with the "Build America, Buy America" provisions of the Infrastructure Investment and Jobs Act and E.O. 14005 which provide that, as appropriate and to the extent consistent with law, the recipient must use all practicable means within their authority under a federal award to provide a preference for the purchase, acquisition, or use of goods, products, or materials produced in the United States (including but not limited to iron, aluminum, steel, cement, and other manufactured products.)

XV. False Claims Act and Program Fraud Civil Remedies

Recipients must comply with the requirements of the False Claims Act, 31 U.S.C. §§3729- 3733, which prohibit the submission of false or fraudulent claims for payment to the Federal Government. (See 31 U.S.C. §§ 3801-3812, which details the administrative remedies for false claims and statements made.)

XVI. Federal Debt Status

All recipients are required to be non-delinquent in their repayment of any federal debt. Examples of relevant debt include delinquent payroll and other taxes, audit disallowances, and benefit overpayments. (See OMB Circular A-129.)

XVII. Federal Leadership on Reducing Text Messaging while Driving

Recipients are encouraged to adopt and enforce policies that ban text messaging while driving as described in E.O. 13513, including conducting initiatives described in Section 3(a) of the Order when on official government business or when performing any work for or on behalf of the Federal Government.

XVIII. Fly America Act of 1974

Recipients must comply with Preference for U.S. Flag Air Carriers (air carriers holding certificates under 49 U.S.C.) for international air transportation of people and property to the extent that such service is available, in accordance with the International Air Transportation Fair Competitive Practices Act of 1974, 49 U.S.C. § 40118, and the interpretative guidelines issued by the Comptroller General of the United States in the March 31, 1981, amendment to Comptroller General Decision B-138942.

XIX. Hotel and Motel Fire Safety Act of 1990

Recipients must ensure that all conference, meeting, convention, or training space funded in whole or in part with federal funds complies with the fire prevention and control guidelines of Section 6 of the Hotel and Motel Fire Safety Act of 1990, 15 U.S.C. § 2225a.

XX. John S. McCain National Defense Authorization Act of Fiscal Year 2019

Recipients, sub-recipients, and their contractors and subcontractors are subject to the prohibitions described in section 889 of the John S. McCain National Defense Authorization Act for Fiscal Year 2019, Pub. L. No. 115-232 (2018) and 2 C.F.R. §§ 200.216, 200.327, 200.471, and Appendix II to 2 C.F.R. Part 200. Beginning August 13, 2020, the statute – as it applies to USDHS recipients, sub-recipients, and their contractors and subcontractors – prohibits obligating or expending federal award funds on certain telecommunications and video surveillance products

and contracting with certain entities for national security reasons.

XXI. Limited English Proficiency (Civil Rights Act of 1964, Title VI)

Recipients must comply with Title VI of the Civil Rights Act of 1964, (42 U.S.C. § 2000d et seq.) prohibition against discrimination on the basis of national origin, which requires that recipients of federal financial assistance take reasonable steps to provide meaningful access to persons with limited English proficiency (LEP) to their programs and services. For additional assistance and information regarding language access obligations, please refer to the USDHS Recipient Guidance: https://www.dhs.gov/guidance- published-help- department- supported-organizations-provide-meaningful-access-people-limited and additional resources on http://www.lep.gov.

XXII. Lobbying Prohibitions

Recipients must comply with 31 U.S.C. § 1352, which provides that none of the funds provided under a federal financial assistance award may be expended by the recipient to pay any person to influence, or attempt to influence an officer or employee of any agency, a Member of Congress, an officer or employee of Congress, or an employee of a Member of Congress in connection with any federal action related to a federal award or contract, including any extension, continuation, renewal, amendment, or modification.

XXIII. National Environmental Policy Act

Recipients must comply with the requirements of the National Environmental Policy Act of 1969, (NEPA) Pub. L. 91-190 (1970) (codified as amended at 42 U.S.C. § 4321 et seq. and the Council on Environmental Quality (CEQ) Regulations for Implementing the Procedural Provisions of NEPA, which require recipients to use all practicable means within their authority, and consistent with other essential considerations of national policy, to create and maintain conditions under which people and nature can exist in productive harmony and fulfill the social, economic, and other needs of present and future generations of Americans.

XXIV. Nondiscrimination in Matters Pertaining to Faith-Based Organizations

It is USDHS policy to ensure the equal treatment of faith-based organizations in social service programs administered or supported by USDHS or its component agencies, enabling those organizations to participate in providing important social services to beneficiaries. Recipients must comply with the equal treatment policies and requirements contained in 6 C.F.R. Part 19 and other applicable statues, regulations, and guidance governing the participations of faith-based organizations in individual USDHS programs.

XXV. Non-Supplanting Requirement

Recipients receiving federal financial assistance awards made under programs that prohibit supplanting by law must ensure that federal funds do not replace (supplant) funds that have been budgeted for the same purpose through non-federal sources.

XXVI. Notice of Funding Opportunity Requirements

All the instructions, guidance, limitations, and other conditions set forth in the Notice of Funding Opportunity (NOFO) for this program are incorporated here by reference in the award terms and conditions. All recipients must comply with any such requirements set forth in the program NOFO.

XXVII. Patents and Intellectual Property Rights

Recipients are subject to the Bayh-Dole Act, 35 U.S.C. § 200 et seq, unless otherwise provided by law. Recipients are subject to the specific requirements governing the development, reporting, and disposition of rights to inventions and patents resulting from federal financial assistance awards located at 37 C.F.R. Part 401 and the standard patent rights clause located at 37 C.F.R. § 401.14.

XXVIII. Procurement of Recovered Materials

States, political subdivisions of states, and their contractors must comply with Section 6002 of the Solid Waste Disposal Act, Pub. L. 89-272 (1965), (codified as amended by the Resource Conservation and Recovery Act, 42 U.S.C. § 6962.) The requirements of Section 6002 include procuring only items designated in guidelines of the Environmental Protection Agency (EPA) at 40 C.F.R. Part 247 that contain the highest percentage of recovered materials practicable, consistent with maintaining a satisfactory level of competition.

XXIX. Rehabilitation Act of 1973

Recipients must comply with the requirements of Section 504 of the Rehabilitation Act of 1973, Pub. L. 93-112 (1973), (codified as amended at 29 U.S.C. § 794,) which provides that no otherwise qualified handicapped individuals in the United States will, solely by reason of the handicap, be excluded from participation in, be denied the benefits of, or be subjected to discrimination under any program or activity receiving federal financial assistance.

XXX. Reporting of Matters Related to Recipient Integrity and Performance General Reporting Requirements.

If the total value of any currently active grants, cooperative agreements, and procurement contracts from all federal awarding agencies exceeds $10,000,000 for any period of time during the period of performance of this federal award, then the recipients must comply with the requirements set forth in the government-wide Award Term and Condition for Recipient Integrity and Performance Matters located at 2 C.F.R. Part 200, Appendix XII, the full text of which is incorporated here by reference in the award terms and conditions.

XXXI. Reporting Subawards and Executive Compensation Reporting of first tier subawards.

Recipients are required to comply with the requirements set forth in the government-wide award term on Reporting Subawards and Executive Compensation located at 2 C.F.R. Part 170, Appendix A, the full text of which is incorporated here by reference in the award terms and conditions.

XXXII. SAFECOM

Recipients receiving federal financial assistance awards made under programs that provide emergency communication equipment and its related activities must comply with the SAFECOM Guidance for Emergency Communication Grants, including provisions on technical standards that ensure and enhance interoperable communications.

XXXIII. Terrorist Financing

Recipients must comply with E.O. 13224 and U.S. laws that prohibit transactions with, and the provisions of resources and support to, individuals and organizations associated with terrorism. Recipients are legally responsible to ensure compliance with the Order and laws.

XXXIV. Trafficking Victims Protection Act of 2000 (TVPA) Trafficking in Persons.

Recipients must comply with the requirements of the government-wide financial assistance award term which implements Section 106 (g) of the Trafficking Victims Protection Act of 2000 (TVPA), codified as amended at 22 U.S.C. § 7104. The award term is located at 2 C.F.R. § 175.15,

the full text of which is incorporated here by reference.

XXXV. Universal Identifier and System of Award Management

Requirements for System for Award Management and Unique Entity Identifier Recipients are required to comply with the requirements set forth in the government-wide financial assistance award term regarding the System for Award Management and Universal Identifier Requirements located at 2 C.F.R. Part 25, Appendix A, the full text of which is incorporated here by reference.

XXXVI. USA PATRIOT Act of 2001

Recipients must comply with requirements of Section 817 of the Uniting and Strengthening America by Providing Appropriate Tools Required to Intercept and Obstruct Terrorism Act of 2001 (USA PATRIOT Act), which amends 18 U.S.C. §§ 175–175c.

XXXVII. Use of USDHS Seal, Logo and Flags

Recipients must obtain permission from their USDHS FAO prior to using the USDHS seal(s), logos, crests or reproductions of flags or likenesses of USDHS agency officials, including use of the United States Coast Guard seal, logo, crests or reproductions of flags or likenesses of Coast Guard officials.

XXXVIII. Whistleblower Protection Act

Recipients must comply with the statutory requirements for whistleblower protections (if applicable) at 10 U.S.C § 2409, 41 U.S.C. § 4712, and 10 U.S.C. § 2324, 41 U.S.C. §§ 4304 and 4310.

The remainder of this page is intentionally left blank.

ATTACHMENT 2
Reimbursement Checklist

DHSEM reserves the right to update this check list throughout the life of the grant to ensure compliance with applicable federal and state rules and regulations. ***Please only check the categories that apply to the reimbursement you are currently requesting.***

EQUIPMENT

- ☐ Have all invoices been included?
- ☐ Has AEL # been identified for each purchase?
- ☐ If service/warranty expenses are listed, are they only for the performance period of the grant?
- ☐ Has proof of payment been included? (e.g., canceled check, Electronic Funds Transfer (EFT) confirmation, or P-Card back up documentation which will include receipt with vendor, copy of credit card statement showing expense charged, and payment to credit card Company for that statement)

CONSULTANTS/CONTRACTORS

- ☐ Does the amount billed by consultant add up correctly?
- ☐ Has all appropriate documentation to denote hours worked been properly signed?
- ☐ Have copies of all planning materials and work product (e.g., meeting documents, copies of plans) been included? (If a meeting was held by recipient or contractor/consultant of recipient, an agenda and signup sheet with meeting date must be included).
- ☐ Has the invoice from consultant/contractor been included?
- ☐ Has proof of payment been included? (e.g., canceled check, Electronic Funds Transfer (EFT) confirmation, or P-Card back up documentation which will include receipt with vendor, copy of credit card statement showing expense charged, and payment to credit card Company for that statement).

SALARY POSITIONS (Note: this applies to positions billed under M&A)

- ☐ Have the following been provided: signed time sheet by employee and supervisor and proof that employee was paid for time worked (statement of earnings, copy of payroll check or payroll register)?
- ☐ Has a time period summary sheet been included for total claimed amount?
- ☐ Has a general ledger payroll report been included for total claimed amount? Ensure this report includes both employee and employer payroll information (i.e., benefits/contributions).
- ☐ Does the back-up documentation include a copy of the check stub per employee for the time period covered?
- ☐ Does the back-up documentation provided match the time period for which reimbursement is being requested?

OTHER:

- ☐ If EHP form needed – has copy of it and approval from USDHS/FEMA been included?

MATCHING FUNDS (IF APPLICABLE)

- ☐ Contributions are from Non-Federal funding sources.
- ☐ Contributions are from cash or in-kind contributions which may include training investments.
- ☐ Contributions are not from salary, overtime, or other operational costs unrelated to training.

This page is intentionally left blank.

ATTACHMENT 3
Glossary and Definitions

Applicant: When an entity applies for PA funding, it is the **Applicant**. Once the Applicant receives funding, it is either the **recipient, pass-through entity,** or a **sub-recipient**.

Authorized Equipment List (AEL): The Authorized Equipment List (AEL) is a list of approved equipment types allowed under FEMA's preparedness grant programs.

Backfill: The act of filling a position left by another employee who has been moved to another role.

Cost Match: Recipient or sub-recipient contribution. This can be cash (hard match) or third party in-kind (soft match). 2 C.F.R. 200.306.

Cost Sharing or Matching: The portion of project costs not paid by federal funds or contributions (unless otherwise authorized by federal statute). 2 C.F.R. 200.1 Cost sharing or matching.

Declared fire: An uncontrolled fire or fire complex, threatening such destruction as would constitute a major disaster, which the FEMA Regional Administrator has approved in response to a state's request for a fire management assistance declaration and in accordance with the criteria listed in 44 C.F.R. 204.21. Fire Management Assistance Declaration Criteria.

Disallowed costs: Those charges to a federal award that the federal awarding agency or pass-through entity determines to be unallowable, in accordance with the applicable federal statutes, regulations, or the terms and conditions of the federal award. 2 C.F.R. 200.1 Disallowed costs.

Demobilization: The process and procedures for deactivating, disassembling, and transporting back to their point of origin all resources that had been provided to respond to and support a declared fire.

Disaster: An emergency condition affecting all or part the state, overwhelming local resources, in which there is likely to be a significant recovery period. The Governor may request a Robert T. Stafford Act (Stafford Act) Disaster Declaration through FEMA, asking for the Public Assistance Program, Fire Management Assistance Program, Individual Assistance Program and Mitigation based upon known and estimated damage assessment data.

Disaster Recovery Reform Act of 2018 (DRRA): The DRRA represents the most comprehensive Emergency Management reform since the Post-Katrina Emergency Management Reform Act in 2006. It includes a larger and more reliable funding stream for pre-disaster mitigation, expanded assistance for individuals and households, and support for states, localities, tribes, and territories (SLTTs) to develop their own emergency management capabilities.

Emergency: A condition in which local and state emergency response agencies are overwhelmed by an incident to the point that federal assistance is needed. Unlike a disaster, an emergency does not have a recovery phase. The Governor may request a Stafford Act Emergency Declaration through FEMA, asking for the Public Assistance Program and/or Fire Management Assistance Grant.

Emergency Work: Work which must be done before, during and immediately after a disaster event to save lives and to protect improved property and public health and safety or to avert or lessen the threat of a major disaster. The FEMA Public Assistance emergency work Categories are:

- Category A (Debris Removal)
- Category B (Emergency Protective Measures)

Equipment: Tangible personal property (including information technology systems) having a useful life of more than one year and a per-unit acquisition cost which equals or exceeds the lesser of the capitalization level established by the non-federal entity for financial statement purposes, or $5,000. 2 C.F.R. 200.1 Equipment.

*Expenditures***:** Charges made by a non-federal entity to a project or program for which a federal award was received. 2 C.F.R. 200.1 Expenditures.

Federal Award: The federal financial assistance that a recipient receives directly from a federal awarding agency or indirectly from a pass-through entity. 2 C.F.R. 200.1 Federal award.

Federal Emergency Management Agency (FEMA): The federal agency responsible for coordinating disaster recovery efforts in partnership with state, local, and tribal governments.

Federal Share: The portion of the federal award costs that are paid using federal funds. 2 C.F.R. 200.1 Federal share.

FEMA/State Agreement: A formal, legal document between FEMA and the state or a tribal government giving the understandings, commitments, terms, conditions, and timelines for assistance resulting from a federal disaster, emergency, or fire declaration, declared by the President.

Governor's Authorized Representative (GAR): The person designated by the Governor to execute all necessary documents for disaster assistance programs on behalf of the state and local grant recipients. The GAR is responsible for state compliance with the FEMA/State Agreement. The GAR may also be designated as the State Coordinating Officer.

Hazard Mitigation: Mitigation is the effort to reduce loss of life and property by lessening the impact of disasters.

Hazard Mitigation (Sections 404 and 406): Section 406 Mitigation measures are specific to the mechanism of the declared disaster and are an integral part of the reconstructed work on a facility or will protect or benefit the repaired portion of the facility. These are different from mitigation measures that are considered for eligibility under the Hazard Mitigation Grant Program (HMGP) of Section 404 of the Stafford Act. In the HMGP program, measures are proposed that may involve facilities other than those damaged by the disaster, new facilities, or even non-structural measures such as the development of floodplain management regulations.

Incident Period: The time interval during which the declared disaster occurs. The Regional Administrator, in consultation with the Governor's Authorized Representative and the Principal Advisor will establish the incident period. Generally, costs must be incurred during the incident period to be considered eligible.

The declaration designates the incident period. The incident period is the span of time during which the federally declared incident occurs. This period varies in length, depending on the incident.

Improved Project: When performing restoration work on a damaged facility, a sub-recipient may use the opportunity to make improvements to the facility. Projects that incorporate such improvements are improved projects. The improved facility must have the same function and at least the equivalent capacity as that of the pre-disaster facility. Federal funding for improved projects is limited to the lesser of the following: the federal share of the approved estimated costs to restore the damaged facility to its pre-disaster design and function or the federal share of the actual cost of completing the improved project. The sub-recipient must obtain FEMA approval, via the NMDHSEM, for an improved project prior to

construction.

Indirect Costs: Costs a recipient or sub-recipient incurs for a common or joint purpose benefitting more than one cost objective that are not readily assignable to the cost objectives specifically benefited.

Joint Field Office (JFO): A temporary facility established in or near a declared disaster area to serve as the field headquarters for FEMA, other federal and state recovery personnel, and serve as the focal point for federal disaster operations, direction, coordination, and information.

Large Project: An approved project estimated to cost the same as or more than the large project threshold amount. The large project threshold is a dollar amount adjusted annually to reflect changes in the Consumer Price Index for all urban consumers. The large project threshold amount, applicable to all projects, is the amount in effect on the declaration date of the disaster, regardless of when project approval is made or when the work is performed.

Management Costs: Management costs are any indirect costs, any direct administrative costs, and any other administrative expenses associated with the administration of HMA awards and subawards. Management costs are provided under HMGP, HMGP Post Fire, BRIC and FMA. For the Hazard Mitigation Grant Program (HMGP) and Hazard Mitigation Grant Program Post Fire (HMGP Post Fire), recipients will be reimbursed no more than 15% of the total amount of the award, of which not more than 10% may be used by the recipient and 5% by the subrecipient. Under HMGP and HMGP Post Fire, recipients' Administrative Plans must include procedures for monitoring and reporting on subrecipient management costs before receiving funding for management costs. For Building Resilient Infrastructure and Communities (BRIC) and Flood Mitigation Assistance (FMA), recipients may apply for a maximum of 10% of the total funds requested in their application cost estimate (federal and non-federal shares) for management costs to support the sub-applications included as part of their award. Subapplicants for BRIC and FMA may apply for a maximum of 5% of the total funds requested in a sub-application for management costs. Additional information is available in FEMA Policy #104-11-1, Hazard Mitigation Grant Program Management Costs (Interim).

Pass-through Entity: A non-federal entity that provides a subaward to a sub-recipient to carry out part of a federal program. 2 C.F.R. 200.1 Pass through entity (PTE).

Performance Period for Hazard Mitigation Assistance: The period of time stipulated in the Sub-recipient Grant Agreement, as amended, during which the sub-recipient must finish the approved work. Projects completed after the active Period of Performance deadline will be considered ineligible.

Quarterly Financial Progress Report: The information in this report is used by NMDHSEM to monitor sub-recipient cash flow, performance, and project implementation to ensure proper use of federal funds.

Recipient: Formally referred to as the grantee or sub-grantee or applicant. Federally Recognized Indian Tribal Governments may also be Recipients if they so desire and if they meet FEMA requirements.

Recovery Officer: Aids in the administration of disaster recovery grant programs for statewide disasters and emergencies. Coordinates and co-administers disaster recovery grant programs, ensuring that they are implemented and carried out according to state and federal program requirements.

Recovery Unit: This is the unit within the NMDHSEM Response and Recovery Bureau designated as responsible for the programmatic administration of the FEMA PA and FMAG Programs.

Recovery Unit Manager: Responsible for administering and supervising staff responsible for federal and state disaster recovery programs and serves as the Deputy State Coordinating Officer (SCO) for

emergencies or major disaster declarations.

Response & Recovery Bureau Chief: Responsible for supervising staff responsible for federal and state disaster recovery programs and staff that provides operational response capabilities to support the citizens of New Mexico. This position also serves as State Coordinating Officer (SCO) for emergencies or major disaster declarations.

Request for Approval Form: Used by sub-recipient to request approval from NMDHSEM to expend funds for previously identified and approved projects. Approval must be received prior to expenditure.

Small Project: An approved project estimated to cost less than the large project threshold amount.

State Coordinating Officer (SCO): The person designated by the Governor to coordinate state and local disaster assistance efforts with those of the federal government. The GAR may also be the SCO. The Governor will name the GAR and the SCO in the FEMA/State Agreement.

Sub-recipient: Formally referred to as the sub-grantee or applicant, is a state agency, local government, tribal government, other legal governmental entity, or a private non-profit (PNP) organization that receives a sub-grant award and which is accountable to the state for the use of the funds provided. The FEMA reserves the final decision as to sub-recipient eligibility.

Supplanting: When a state or unit of local government reduces state or local funds for an activity specifically because federal funds are available (or expected to be available) to fund that same activity. When supplanting is not permitted, federal funds must be used to **supplement** existing state or local funds for program activities and may not replace state or local funds that have been appropriated or allocated for the same purpose. Additionally, federal funding may not replace state or local funding that is required by law. If a question of supplanting arises, the sub-recipient or grantee will be required to substantiate that the reduction in non-federal resources occurred for reasons other than the receipt or expected receipt of federal funds. US Department of Justice Office of Justice Programs, Grants 101.

The remainder of this page is intentionally left blank.

ATTACHMENT 4
Acronyms

AEL: Authorized Equipment List
AGAR: Alternate Governor's Authorized Representative
ASB: Administrative Services Bureau of NMDHSEM
CFDA: Catalog of Federal Domestic Assistance
DAC: Direct Administrative Costs
DOT: Department of Transportation
DPS: Department of Public Safety
DRRA: Disaster Recovery Refo1m Act of 2018
DSCO: Deputy State Coordinating Officer
DSIBD: Deputy State Infrastructure Branch Director
DSPAGS: Deputy State Public Assistance Group Supervisor
EMAC: Emergency Management Assistance Compact
EMMIE: Emergency Management Mission Integrated Environment
EMNRD: Energy, Minerals and Natural Resources Department
FEMA: Federal Emergency Management Agency
FFATA- Federal Funding Accountability and Transparency Act
FMAG - Fire Management Assistance Grant
GAR: Governor's Authorized Representative
IMAS: Intrastate Mutual Aid System
INF: Immediate Needs Funding
IOF: Initial Operating Facility
JFO: Joint Field Office
NSPO: Net Small Project Overrun
NMDHSEM: New Mexico Department of Homeland Security and Emergency Management
ONA: Other Needs Assistance
OMB: Office of Management and Budget
PA: Public Assistance
PAGS: Public Assistance Group Supervisor
PAPPG: Public Assistance Program and Policy Guide
PDA: Preliminary Damage Assessment
PDMG: Program Delivery Manager
PIO: Public Information Officer
PNP: Private Non-Profit
POP: Period of Performance
PW: Project Worksheet
R&R: Response & Recovery Bureau
REC: Record of Environmental Consideration
RO: Recovery Officer
RP A - Request for Public Assistance
SCO: State Coordinating Officer
SOW: Scope of Work
SHARE: New Mexico Statewide Human Resources, Accounting, and Management Reporting System

SIBD: State Infrastructure Branch Director
SPAGS: State Public Assistance Group Supervisor
SPAO: State Public Assistance Officer
USDHS: United States Department of Homeland Security
USFS: US Forest Service
VFO: Virtual Field Office

The remainder of this page is intentionally left blank.

2022_BRIC_SGA_Microgrids

Final Audit Report 2024-10-02

Created:	2024-10-02
By:	JULIE KENNY (jckenny@santafenm.gov)
Status:	Signed
Transaction ID:	CBJCHBCAABAA4ur7POMV7qg5nM4bzGJm61gZ4-za95Q5

"2022_BRIC_SGA_Microgrids" History

Document created by JULIE KENNY (jckenny@santafenm.gov)
2024-10-02 - 3:03:06 PM GMT- IP address: 63.232.20.2

Document emailed to Rebecca Mnuk-Herrmann (ramnukherrmann@santafenm.gov) for signature
2024-10-02 - 3:04:08 PM GMT

Email viewed by Rebecca Mnuk-Herrmann (ramnukherrmann@santafenm.gov)
2024-10-02 - 3:40:34 PM GMT- IP address: 104.47.65.254

Document e-signed by Rebecca Mnuk-Herrmann (ramnukherrmann@santafenm.gov)
Signature Date: 2024-10-02 - 3:41:47 PM GMT - Time Source: server- IP address: 63.232.20.2

Agreement completed.
2024-10-02 - 3:41:47 PM GMT

Powered by Adobe Acrobat Sign

City of Santa Fe New Mexico

Finance Department

Project Ledger Request Form

Date of Request: 10/22/2024 UPDATED 10/22/24-CT

Project Title: Critical Infrastructure Microgrids Scoping

Project Type: ☑ CIP ☑ Grant ☐ Internal Tracking

Project ID: PWD2531532
Grant ID: F2511
Approved By: Erika Lujan (Oct 30, 2024 07:57 MDT)
PL/CT (Finance Use Only)

Department: Public Works Project Manager: Regina Wheeler /HC Ext: 6622

Project Date Range: 02/14/2024 to 2/14/2027 ☑ Create Fixed Asset

---

☑ Multi-Funding (complete all funding sources, should equal 100%)

Funding Source: Dept of Homeland Security & Emergency Management % of Funding: 76%

MUNIS ORG: 3159981/2212850 MUNIS OBJ: 490580 Awarded Amount: $375,025/$24,966

Funding Source: 1/2% GRT for PW Infrastructure % of Funding: 24%

MUNIS ORG: 3650416 MUNIS OBJ: 572970 Awarded Amount: $125,008

Expense String Phase:

A project must have at least one phase identified, this can be used as an additional level of tracking, for example, CIP - Design, Construction, etc. For Grants can be used as reimbursable types, such as transportation, salaries.

(You can create more than one phase and you can default MUNIS ORGs and OBJs, optional)

Phase: Subrecipient Management MUNIS ORG: 2122850 MUNIS OBJ: 510300
CONSTRUCTION-3159981.572970

Grants Only (list all grants if applicable):

Grantor Name: EMT-2022-BR-001-BRIC Awarded Amount: 399990.75

AR Charge Code: 3159981/22122850.490580 ☐ Grant funds multiple projects (Complete a form for each project)

Grantor Id: _____ Federal CFDA (if applicable): 97.047

Grantor Name: _____ Awarded Amount: _____

AR Charge Code: _____ ☐ Grant funds multiple projects (Complete a form for each project)

Grantor Id: _____ Federal CFDA (if applicable): _____

(If grants please provide all grant award documents with form) [X] Attached Grant Documentation

BRIC_2022_Microgrids_CouncilPacket_2024-

Final Audit Report 2024-11-01

Created:	2024-10-31
By:	Justin Gonzales (jmgonzales@santafenm.gov)
Status:	Signed
Transaction ID:	CBJCHBCAABAAP4PIJVIFKOZxOuCeWtlegRo5tw0faBhp

"BRIC_2022_Microgrids_CouncilPacket_2024-" History

Document created by Justin Gonzales (jmgonzales@santafenm.gov)
2024-10-31 - 8:31:48 PM GMT- IP address: 63.232.20.2

Document emailed to ajhopkins@santafenm.gov ajhopkins@santafenm.gov (ajhopkins@santafenm.gov) for signature
2024-10-31 - 8:34:32 PM GMT

Email viewed by ajhopkins@santafenm.gov ajhopkins@santafenm.gov (ajhopkins@santafenm.gov)
2024-10-31 - 11:17:13 PM GMT- IP address: 104.47.65.254

Document e-signed by ajhopkins@santafenm.gov ajhopkins@santafenm.gov (ajhopkins@santafenm.gov)
Signature Date: 2024-10-31 - 11:17:50 PM GMT - Time Source: server- IP address: 63.232.20.2

Document emailed to EMILY OSTER (ekoster@santafenm.gov) for signature
2024-10-31 - 11:17:52 PM GMT

Email viewed by EMILY OSTER (ekoster@santafenm.gov)
2024-11-01 - 5:28:47 PM GMT- IP address: 104.47.65.254

Document e-signed by EMILY OSTER (ekoster@santafenm.gov)
Signature Date: 2024-11-01 - 5:40:33 PM GMT - Time Source: server- IP address: 63.232.20.2

Agreement completed.
2024-11-01 - 5:40:33 PM GMT

Powered by Adobe Acrobat Sign

CITY OF SANTA FE

Date: October 21, 2024

To: Governing Body

Via: Regina Wheeler, Public Works Director RW (Oct 31, 2024 11:08 MDT)
Henri Hammond-Paul, Community Health and Safety Director HENRI HAMMOND-PAUL (Oct 31, 2024 11:26 MDT)

From: **Brian Williams, Office of Emergency Management Director** BRIAN WILLIAMS (Oct 30, 2024 11:03 MDT)

Subject: **Building Resilient Infrastructure in Communities (BRIC) Grant Approval – Cerillos Road Stormwater Infiltration at Ashbaugh Park**

ITEM AND ISSUE:
Request Approval of the 2022 FEMA Building Resilient Infrastructure in Communities (BRIC) Sub-Grant Agreement EMT-2022-BR-0002 in the Total Amount of $709,122.47 with the New Mexico Department of Homeland Security and Emergency Management to Design Flood Mitigation Solutions at Ashbaugh Park. Brian Williams, Director Office of Emergency Management, bgwilliams@santafenm.gov, 505-469-1484.

Request approval of FY25 Budget Adjustment Resolution (BAR) to Budget $506,576.60 in Awarded Grant Funds into Stormwater WIP Design, 168,858.87 in Matching Funds from the Stormwater Utility Service Fee to Stormwater WIP Design, and $33,687.00 in Grant Funds for Subrecipient Management Costs into Emergency Management Professional Contracts.

Action Requested: Grant Approval; BAR Approval

BACKGROUND AND SUMMARY:
The City of Santa Fe applied for this reimbursable grant through the United States Department of Homeland Security and Emergency Management (DHSEM) and the Federal Emergency Management Agency (FEMA). Building Resilient Infrastructure and Communities (BRIC) supports states, local communities, tribes and territories as they undertake hazard mitigation projects, reducing the risks they face from disasters and natural hazards.

The Office of Emergency Management and the Parks and Open Space Division have secured a grant to design innovative flood mitigation solutions at Ashbaugh Park. To reduce flooding of the Cerrillos Rd corridor, the project will divert flows from Cerrillos Road to an infiltration facility located within Ashbaugh Park. By promoting infiltration and passive reuse, this project is intended to alleviate stress on existing stormwater infrastructure, conserve water resources, improve water quality, and reduce impacts of flooding on downstream neighbors. The design will also incorporate community amenities like a refreshed frisbee golf course, outdoor classroom, and walking paths, maximizing benefits for both the environment and the public.

This Building Resilient Infrastructure in Communities (BRIC) Grant provides a 75% federal share of $506,576.60 and requires 25% local share of $168.858.87. The grant amount includes a 100% federally

funded Subrecipient Management Costs $33,687.00 to assist with capacity in managing the grant. The Office of Emergency Management will manage the grant, while the Parks and Open Space Division will manage the project.

The term of the grant ends on February 14, 2027.

PROCUREMENT METHOD:
Not applicable. Grant approval only.

Supporting Information:

CONTRACT NUMBER:

The FY25 Project ledger number is OEM2523103

SOURCE/REVENUE: ☐Expense ☒Revenue

The funding source is:

Federal Share (not including sub-recipient management costs):
Fund Name/Number: Stormwater Utility Fee/ 231
Munis Org Name/Number: Stormwater/2310411
Munis Object Name/Number: Fed Grant (FEMA)/490580

The Federal funding source (sub-recipient management costs only) is:
Fund Name/Number: Emergency Services/Fund 221
Munis Org Name/Number: Emergency Management/2212850
Munis Object Name/Number: Fed Grant (FEMA)/490580

Local Share
Fund Name/Number: Stormwater Utility Fee/ 231
Munis Org Name/Number: Stormwater/2310411

If the project is grant funded? List grant award number*: EMT-2022-BR-0002*

Grant Manager / Accounting Officer Approval: Matthew Bonifer Matthew Bonifer (Oct 31, 2024 15:48 MDT) **Date:** 10/31/2024
Comment/Exceptions: _____

Project Ledger #: _____

Budget Officer Approval: Andy Hopkins **Date:** 10/31/2024
Comment/Exceptions: _____

CAPITAL ASSET (will this procurement result in a tangible item that costs more than $5,000?):

☐Yes | ☒ No

 # (if known): _____

Repair or Replacement of Existing Equipment:

☐Yes | ☒ No
If yes -> ☐Repair | ☐ Replacement

Please explain: _____

Capital Project:
(New and improvement projects that are going to cost $10,000 or more)
☐ Yes | ☒ No

Project Ledger #: OEM2523103 _____

Anticipated length of project: 2.5 Years _____

Asset Manager Approval: _____ **Date:** _____
Comment/Exceptions: _____

Department Approvals:
IT Components: ☐ **Yes | ☒ No**
Vehicles: ☐ **Yes | ☒ No**
Facilities, Furniture, Fixtures, Equipment: ☐ **Yes | ☒ No**

Approval: _____ **Title:** _____ **Date**: _____
Approval: _____ **Title:** _____ **Date**: _____
Comment & Exceptions: _____

Department Contract Administrator Contact Info:
Justin Gonzles, jmgonzales@santafenm.gov

ATTACHMENTS:

1. Sub-Recipient Grant Agreement
2. Budget Amendment Resolution
3. Project Ledger

Log # *{Finance use only}*:	
Journal # *{Finance use only}*:	

City of Santa Fe, New Mexico
BUDGET AMENDMENT RESOLUTION (BAR)

DEPARTMENT / DIVISION NAME	DATE
Public Works / Stormwater CIP	9/9/2024

ITEM DESCRIPTION	ORG	OBJECT	PROJECT	INCREASE	DECREASE
EXPENDITURES				*{enter as positive #}*	*{enter as negative #}*
WIP DESIGN - Cerrillos Rd Stormwater at Ashbaugh Park	2310411	572960	OEM2523103-Design	675,436	
PROFESSIONAL CONTRACTS	2212850	510300	OEM2523103-ContrSvc	33,687	
REVENUES				*{enter as negative #}*	*{enter as positive #}*
FEMA - Cerrillos Rd Stormwater at Ashbaugh Park	2310411	490580	OEM2523103	(506,577)	
Federal Emergency Management Agency (GRANT)	2212850	490580	OEM2523103	(33,687)	
				$ 168,859.00	$ -

JUSTIFICATION: *(use additional page if needed)*
--Attach supporting documentation/memo

FY 25 budget increase for sub-recipient grant award from Department of Homeland Security BRIC for Cerrillos Road Stormwater Infiltration at Ashbaugh Park in the amount of $506,577 for Design; $33,687 for Management costs; and a $168,859 local match from Stormwater fund balance. (Expires 02/14/2027)

This grant will fund the design of large-scale stormwater infiltration at Ashbaugh Park to reduce flooding risk to downstream residents from excess runoff from the Cerrillos Rd corridor.

{Complete section below if BAR results in a net change to ANY Fund}

Fund(s) Affected	Fund Balance Increase/(Decrease)
231	(168,859)
TOTAL:	**(168,859)**

Kyle Morgan — 10/21/2024
Prepared By *{print name}* — Date

Division Director Signature *{optional}* — Date

HENRI HAMMOND-PAUL (Oct 31, 2024 11:26 MDT) — 10/31/2024
Department Director Signature — Date

{Use this form for Finance Committee/ City Council agenda items ONLY}

CITY COUNCIL APPROVAL

City Council Approval Date

Agenda Item #:

Andy Hopkins — 10/31/2024
Budget Officer — Date

Finance Director *{≤ $5,000}* — Date

City Manager *{≤ $60,000}* — Date

State of New Mexico
DEPARTMENT OF HOMELAND SECURITY & EMERGENCY MANAGEMENT
P.O. Box 27111
Santa Fe, NM 87502

SUB-RECIPIENT GRANT AGREEMENT

FY22 Building Resilient Infrastructure and Communities (BRIC)

Federal Grant No.: EMT-2022-BR-0002: Assistance Listing 97.047

1. SUB-GRANT NO.	2. SUB-RECIPIENT NAME	3. PROJECT NAME	
EMT-2022-BR-0002	City of Santa Fe	Cerrillos Rd Stormwater Infiltration at Ashbaugh Park	
4. STATE DFA VENDOR NUMBER	**5. EIN NUMBER**	**6. SAM UEI NUMBER**	**7. CAGE CODE**
54360	856000168	QLN2YKMMJ8X6	4C987
8. SUB-RECIPIENT PHYSICAL ADDRESS	**9. SUB-RECIPIENT REMIT ADDRESS**		
200 Lincoln Ave. Santa Fe, NM 87504	200 Lincoln Ave. Santa Fe, NM 87504		
10. DHSEM CONTACT NAME:	**11. CONTACT DESK PHONE:**	225-313-1774	
Natalie West			
	CONTACT EMAIL ADDRESS:	DHSEM.mitigation@dhsem.nm.gov cc: natalie.west@dhsem.nm.gov	
12a. PERFORMANCE PERIOD START DATE	2/15/2024	**12b. PERFORMANCE PERIOD END DATE**	2/14/2027
13. TOTAL AWARD AMOUNT:	$709,122.47		
13a. FEDERAL SHARE	**13b. LOCAL SHARE**	**13c. STATE SHARE**	
$540,263.60	$168,858.87	$0.00	

	14a. NAME OF PROJECT AWARD	14b. FEDERAL SHARE	14c. NON-FEDERAL SHARE
1	Contractual	$506,576.60	$168,858.87
2	Subrecipient Management Costs	$33,687.00	$
3		$	$
4		$	$
5		$	$
6		$	$

TOTAL AMOUNT OF PROJECT	**$540,263.60**	**$168,858.87**

WHEREAS The State of New Mexico will serve as the "pass-through entity" with respect to the State's role in providing sub-awards and administering grant assistance provided to sub-recipients and may, subject to a Memorandum of Agreement, directly support project development and administration.

WHEREAS funding has been obligated from the Federal Emergency Management Agency pursuant to a request by the applicant, The Sub-Recipient, City of Santa Fe.

NOW, THEREFORE, it is mutually understood and agreed between the recipient NMDHSEM, and **City of Santa Fe,** hereinafter referred to as "sub-recipient," as follows:

ARTICLE 1: REQUIREMENTS AND ASSURANCES

A. The sub-recipient hereby agrees that the performance period for the grant identified on Page 1, Box 1. is consistent with the performance period identified on Page 1, Box 12a. and 12b. This Sub-recipient Grant Agreement, as amended, shall remain open for administrative purposes if necessary to achieve final payment and financial reconciliation.

B. The sub-recipient hereby agrees that the sub-recipient official signing this Sub-recipient Grant Agreement certifies that all financial expenditures, including all supporting documents submitted for reimbursement, have been incurred by the sub-recipient and are eligible and allowable expenditures consistent with the guidelines for this award. The sub-recipient agrees to follow reasonable professional standards in all financial management and bookkeeping procedures necessary to carry out this agreement.

C. The sub-recipient hereby agrees that no member, officer, or employee of the sub-recipient organization, or its designees or agents, no member of the governing body of the locality in which the program is situated, and no other public official of such locality or localities who exercises any functions or responsibilities with respect to the program during his or her tenure or for one year after that, shall have any interest, direct or indirect, in any contract or subcontract, or the process thereof, for work to be performed in connection with this Sub-recipient Grant Agreement; the sub-recipient shall incorporate in all such contracts a provision prohibiting such interest pursuant to the purposes of this Sub-recipient Grant Agreement.

D. The sub-recipient hereby agrees that it understands and agrees that it cannot use any federal funds, either directly or indirectly, in support of the enactment, repeal, modification, or adoption of any law, regulation, or policy, at any level of government, without the express written approval of the State of New Mexico or FEMA.

E. The sub-recipient hereby agrees that FEMA reserves a royalty-free, non-exclusive, and irrevocable license to reproduce, publish, or otherwise use and authorize others to use, for federal government purposes: (1) the copyright in any work developed under this Sub-recipient Grant Agreement; and (2) any rights of copyright to which the sub-recipient purchases ownership with federal support. The sub-recipient agrees to consult with FEMA through NMDHSEM regarding allocating any patent rights that arise from or are purchased with this funding.

F. The sub-recipient hereby agrees that signatures of the sub-recipient officials on this Sub-recipient Grant Agreement attest to the sub-recipient's understanding, acceptance, and compliance with

Lobbying, Debarment, Suspension, and Other Responsibility Matters; Drug- free Workplace; Conflict of Interest, and Non-Supplanting certifications. Federal funds will not be used to supplant state or local funds. Federal funds will be used to supplement existing sub-recipient funding to augment program activities and not replace those funds which have been appropriated in the budget for the same purpose.

G. The sub-recipient hereby agrees that their accounting system allows for the separation of fund sources. Funding provided under this Sub-recipient Grant Agreement cannot be commingled with funds from other federal, state, or local agencies, and each project must be accounted for separately.

H. The sub-recipient hereby agrees that it shall comply with applicable Federal Civil Rights Laws and Regulations: Title VI of the Civil Rights Act of 1964, Section 504 of the Rehabilitation Act of 1973, Title IX of the Education Amendments of 1972, Age Discrimination Act of 1975, and Americans with Disabilities Act of 1991. The sub-recipient will take reasonable steps to ensure Limited English Proficient (LEP) persons have meaningful access to its programs and activities. Executive Order 13379 Individuals with Disabilities in Emergency Preparedness, requires the government to support safety and security for individuals with disabilities in situations involving disasters, including earthquakes, tornadoes, fires, floods, hurricanes, and acts of terrorism.

I. The sub-recipient hereby certifies that for its employees, it has an Affirmative Action Plan/Equal Employment Opportunity Plan (EEOP) if not exempted by the Federal Government or New Mexico rule or statute. An EEOP is not required for sub-recipients of less than $25,000 or fewer than 50 employees.

J. The sub-recipient hereby certifies that its employees are eligible to work in the United States as verified by Form I–9, Immigration & Naturalization Service Employment Eligibility.

K. The sub-recipient hereby agrees that it is the responsibility of the sub-recipient to fully understand and comply with the requirements of the following, where such requirements apply to the sub-recipient set forth in:

1. 2 C.F.R. § 200: Code of Federal Regulations
2. 44 C.F.R. parts 7, 9, 10, 13, 14, 17, 18, 25, 206, 220, 221, 44 C.F.R. Part 209, 2 C.F.R. Part 200 and any other applicable FEMA policy memoranda and guidance documents
3. FEMA Hazard Mitigation Assistance Program and Policy Guide
4. New Mexico State Procurement Code
   New Mexico Administrative Code Title 2 – Public Finance https://www.srca.nm.gov/nmac-home/nmac-titles/title-2-public-finance/

ARTICLE 2: REIMBURSEMENT OF FUNDS

The NMDHSEM will apply the following procedures for making payments to sub-recipients:

A. Payment of Funds, General: Once FEMA has obligated funds and NMDHSEM has budgeted and encumbered those funds, the Cabinet Secretary is authorized to advance funds, as permissible, and to consider requests for payments for progress and completion based on proper review and approvals, in accordance with the sub-grant agreement or amendment as described below. Review and audit of expending and accounting of federal awards and state funds will be conducted to ensure records, reports, and documentation for compliance and tracing of funds are accounted for; 2 C.F.R. §§ 200.302(b)(6), 200.305(a). The State Department of Finance and Administration (DFA) may require additional supporting data and documents prior to disbursement of funds.

B. Reimbursement shall be based upon authorized and allowable expenditures consistent with the project narrative, grant guidelines, and timely submission of Financial and Performance Progress Reports. Reimbursement of expenditures shall be requested quarterly or monthly if need be for expenditures within the performance period. A minimum of 25% (of the total project cost) in the non-federal match must be included on each request for reimbursement. All expenditures must be supported with source documentation (e.g., copies of proof of payment, invoices, receipts, timesheets with name/rate/hours and certified, breakdown of expenditures based on FEMA approved budget, warrants, a brief description of work done, required deliverables, etc.). Request for reimbursement will not be processed if quarterly financial or performance reports are delinquent. The final payment of 15% will not be made until DHSEM verifies that all activities are complete. All payments shall be made on an actual cost reimbursement basis.

C. Contracts: All requests for proposals/bids, sole–source procurements, single vendor responses to a competitive bid, and contracts require DHSEM pre–approval prior to implementation. The relevant contract must accompany requests for reimbursement for contractual services.

D. Local Match: Local matching funds must clearly support the source, the amount, and the timing of all matching contributions. When requesting reimbursement, the match percentage must be shown on each invoice. Copies of proof of payment, invoices, receipts, purchase orders, timesheets with name/wage/hours, cost allocation, general ledger, warrants, etc., must be submitted as a backup for the match.

E. Non-reimbursable Expenses:

- Transfer of funds between any programs. Contracts, single vendor response to a competitive bid, sole source contracts, and any procurement documentation not pre-approved by DHSEM.
- Training and related travel costs not pre-approved by DHSEM.
- Supplanting (using federal funds to purchase items previously budgeted for with state or local funds).
- Maintenance and/or wear and tear costs of general use vehicles and emergency response apparatus.
- Equipment purchased for an exercise cannot be used for permanent installation and/or beyond the scope of an exercise.
- Weapons and ammunition.
- Entertainment and sporting events
- Personal items such as laundry, personal hygiene items, magazines, in-room movies, personal travel, and personal phone calls.
- Travel insurance, visa, and passport charges.
- Lodging costs in excess of State per diem, as appropriate.
- Lunch when travel is wholly within a single day.
- Standalone working meals.
- Bar charges, alcoholic beverages.
- Finance, late fees, or interest charges.
- Lobbying, political contributions, and legislative liaison activities.
- Organized fundraising, including salaries of persons while engaged in these activities.
- Expenditures not supported with appropriate documentation when submitted for reimbursement. Only properly documented expenditures will be processed for payment. Unsupported expenditures will be returned to the jurisdiction for resubmission.

F. Payment Conditions. The sub-recipient must certify that in requesting and accepting a sub-grant payment, they have spent those funds on eligible expenditures; that the work performed was within

the scope of work allowed for specific projects; and that all records pertinent to specific projects will be retained for at least the periods required under record retention regulation requirements from the closeout of the last project. The period of record retention for grant and financial data is three years if state funds are paid.

G. Delays and Denial of Payment. Reasons for delays in FEMA processing of payment requests include, but are not limited to, the following:

- Vendor identification number is missing or incorrect;
- Disaster and project number is missing;
- Period of performance (POP) listed is incorrect;
- Service delivery dates do not agree with invoices or outside of contract period;
- Dollar amount on forms do not agree;
- Mathematical errors;
- Full address of sub-grantee is not included;
- Sub-recipient did not provide required back-up documentation; or

Reasons for NMDHSEM declining payment requests include, but are not limited to, the following:

- The POP has expired;
- The amount exceeds the remaining funding available for disbursement prior to the final financial and program compliance reviews (the hold or funding retention amount);
- Request for payment requires a state and/or budget amendment, and cannot be processed until the amendment request is received/approved;
- The reimbursement requested is for an activity outside of the approved scope of work;
- Forms are not signed by an authorized person, or are signed by only one signatory;
- Reimbursement of awarded funds have been suspended due to a non-compliance issue such as failure to submit quarterly reports; or
- Reimbursements of awarded funds have been suspended due to noncompliance activities.

Sub-recipients can reduce the likelihood of delays in processing of payment requests by checking for accuracy prior to submission.

ARTICLE 3: AUDITING AND REPORTING REQUIREMENTS

A. Quarterly Reports. In accordance with 2 C.F.R. § 200.328, the Applicant shall submit quarterly reports to the NMDHSEM beginning with the first full quarter after the signature date on the Sub-recipient Grant Agreement. The NMDHSEM will provide sub-recipient a form for this report. Quarterly reports are due no later than the 15th of the month following the end of the quarter - January 15, April 15, July 15, and October 15.

In order that NMDHSEM may adequately evaluate the progress and status of each sub-grant, quarterly reports shall contain a description of the work accomplished to date, the methods and procedures used, the anticipated completion date, a summary of all project costs to date, and other such information as may be of assistance in its evaluation of the project.

Reports shall be sent to the Department of Homeland Security & Emergency Management, Recovery Unit, P.O. Box 27111, Santa Fe, NM 87502, or electronically to DHSEM.mitigation@dhsem.nm.gov.

B. Additional Reporting Requirements. The sub-recipient must immediately report in writing to the NMDHSEM Mitigation Unit any alleged acts or allegations of fraud or misappropriation of funds for work authorized under this Sub-recipient Grant Agreement. This extends to reporting any legal action, lawsuit, bankruptcy, or other action that may jeopardize the successful completion of any authorized

project. Additional reporting and financial reconciliation requirements may also be requested at NMDHSEM and FEMA's request. Failure to comply with these requests may jeopardize funding and may be a breach of this Sub-recipient Grant Agreement.

C. Enforcement. The NMDHSEM may suspend drawdowns, impose other special conditions, or take other authorized action pursuant to 2 C.F.R. § 200.339 (Remedies for Noncompliance) if the sub-recipient does not submit accurate and timely reports. This may include, among other things, the administrative closeout of a grant and/or any projects under a grant when the sub-recipient is not responsive to reasonable efforts NMDHSEM makes to collect required reports needed to complete closeout. Administrative closeout is a unilateral mechanism by NMDHSEM to move forward with project or grant closeout using available grant information in lieu of final reports. This can require NMDHSEM to make cash or cost adjustments and ineligible cost determinations, which may result in identifying a debt owed to FEMA and/or NMDHSEM.

D. Financial Procedures. The sub-recipient agrees to maintain financial procedures and support documents and to establish and maintain a proper accounting system to record expenditures of disaster assistance funds in accordance with generally accepted accounting principles or as directed by the Governor's Authorized Representative, to account for the receipt and expenditure of funds under this Agreement. If applicable, RECIPIENT / SUBGRANTEE shall conduct audit(s) pursuant to the Single Audit Act of 1984, 31 U.S.C. § 7501 et. seq., 44 C.F.R. Part 14, 2 C.F.R. Part 200, 0MB Circular A-133, "Audits of States, Local Governments, and Non-profit Organizations," and applicable New Mexico laws, rules and regulations. Further, sub-recipient must provide a hard copy of the Single Audit Report within sixty (60) days of the close of its fiscal year. Otherwise, pursuant to 44 C.F.R. § 13.43, NMDHSEM may withhold or suspend payments under any grant award.

The sub-recipient shall retain all financial records, supporting documents, statistical records, and any other documents pertinent to this contract for a period of five years after the date of submission of the final expenditures report. However, if litigation or an audit has been initiated prior to the expiration of the three-year period, the records shall be retained until the litigation or audit findings have been resolved.

E. Authorizing Statute. This award is made under the provisions of the Robert T. Stafford Disaster Relief and Emergency Assistance Act, Pub. L. No. 93-288 (1974) (codified as amended at 42 U.S.C. §§ 5121-5207) (Stafford Act), in accordance with 44 C.F.R. § 206.44.
All scopes of work and costs approved as a result of this Sub-recipient Grant Agreement, whether as estimates or final costs approved through subawards, PWs, or otherwise, will incorporate by reference the terms of this Sub-recipient Grant Agreement and must comply with applicable laws, regulations, policy, and guidance in accordance with this Sub-recipient Grant Agreement.

Pursuant to Executive Order 13858 Strengthening Buy-American Preferences for Infrastructure Projects, FEMA encourages recipients to use, to the greatest extent practicable and consistent with the law, iron and aluminum as well as steel, cement, and other manufactured products produced in the United States in Public Assistance and HMGP eligible public infrastructure repair and construction projects affecting surface transportation, ports, water resources including sewer and drinking water, and power. Such preference must be consistent with the law, including cost and contracting requirements at 2 C.F.R. Part 200.

F. Additional Terms and Conditions. The following additional sub-grant agreement documents are fully incorporated into this Sub-recipient Grant Agreement and thereby constitute additional terms and conditions of this agreement.

- The Stafford Act, its implementing regulations contained in Title 44 of the C.F.R., and FEMA policy and guidance.

- **Hazard Mitigation Assistance Guide (March 2023)**
- The Uniform Administrative Requirements, Cost Principles, and Audit Requirements for Federal Awards set forth at 2 C.F.R. Parts 200 and 3002.
- Attachment 1 United States Department of Homeland Security (USDHS) Standard Terms and Conditions (January 24, 2022) in effect on the date of the Declaration which are incorporated by reference into this Sub-recipient Grant Agreement
- Attachment 2 Reimbursement Checklist
- Attachment 3 Glossary and Definitions
- Attachment 4 Acronyms

ARTICLE 4: SCOPE OF WORK

A. As authorized by the Robert T. Stafford Disaster Relief and Emergency Assistance Act (the Stafford Act), as amended (42 U.S.C. § 5121 et seq.), and Section 662 of the Post Katrina Emergency Reform Act of 2006, as amended (6 U.S.C. § 762), the **City of Santa Fe.** The has been awarded funds for Cerrillos Rd stormwater infiltration at Ashbaugh Park. Funds shall be utilized as outlined in the approved budget as awarded by FEMA on **02/15/2024**. The Sub Recipient shall match the Federal Award Amount of **$540,263.60**, with a local jurisdictional amount of **$168,858.87** for a total project cost of **$709,122.47** All work performed pursuant to this agreement must comply with the approved FEMA application. All work must be completed within the performance period, between **02/15/2024 – 02/14/2027** The **City of Santa Fe** shall not sub-grant any part of this award to any other entity or organization. Within the first reporting quarter, all awards require confirmation that expenditures in the budget category toward this project will be made. If not, DHSEM may execute a de-obligation of Federal funds without recourse by the **City of Santa Fe.**

B. Approved projects must commence within the first reporting quarter. If a project cannot commence and be operational within the first reporting quarter of the approved award date, the sub–Recipient must submit a written statement to DHSEM, signed by the sub-recipient signatory officials, justifying the delay in implementation, the expected starting date, and a formal request to extend the project start date past the first reporting quarter. At the sole discretion of DHSEM, the grant award is subject to cancellation, and funds may be de-obligated and reallocated to other projects.

ARTICLE 5: PUBLICATIONS

A. Publications created with funding under this grant shall prominently contain the following statement or a DHSEM pre-approved modification: **This Document was prepared under a sub-grant from the FEDERAL EMERGENCY MANAGEMENT AGENCY, and the NEW MEXICO DEPARTMENT OF HOMELAND SECURITY AND EMERGENCY MANAGEMENT. Points of view or opinions expressed in this document are those of the authors and do not necessarily represent the official position or policies of the Federal Emergency Management Agency and the New Mexico Department of Homeland Security and Emergency Management.**

ARTICLE 6: PERFORMANCE PERIODS

The performance period for this sub-grant award is **02/15/2024 – 02/14/2027.** Further, all personnel-related grant activity must be completed between **02/15/2024 – 02/14/2027**. Funds may not be obligated outside of these time periods. An obligation occurs when funds are encumbered, as with a purchase order and/or commitment of salaries and benefits**. All obligated and encumbered funds *must be liquidated* within 45 days of the end of the performance period when the *Final Progress and Financial Reports* are due**.

ARTICLE 7: RECOVERY OF FUNDS FOR DUPLICATION OF BENEFITS AND INELIGIBLE ACTIVITIES

A. Ineligible Activities. The FEMA and/or NMDHSEM may disallow costs and recover funds based on the results of audit or review during or after performance of the award to ensure compliance with the terms of the Sub-recipient Grant Agreement and award document. The FEMA and/or NMDHSEM is required to recover funds when the sub-recipient has ineligible underruns (for example, actual costs for a PA large project are less than the amount awarded based on initial estimates); knowingly or negligently withholds or misrepresents material information; fails to complete work and comply with the terms of this Sub-recipient Grant Agreement or the approved award; expends federal funds in error; or incurs costs that are unreasonable or otherwise disallowed. If, after exhaustion of appeal rights, FEMA and/or NMDHSEM determines a debt is owed, the State has 30 days to resolve the amount owed before the debt is referred to the FEMA Finance Center for collection. The State may do so by directly paying FEMA. The State may also deposit the amount owed directly into the applicable subaccount in U.S. Health and Human Services (HHS)/Smartlink and notify FEMA when it has reimbursed that subaccount, after which FEMA will de-obligate that amount in the subaccount. Alternatively, the sub-recipient may request to substitute unallowable costs for other costs that are allowable (e.g., necessary, allocable, and reasonable under the same award and have not yet been reimbursed by FEMA).

B. Duplication of Benefits. In accordance with the provisions of 42 U.S.C. § 5155 (Section 312 of the Stafford Act), duplication of benefits is prohibited. The NMDHSEM must take all actions necessary and reasonable to ensure that all who receive federal assistance are aware of their responsibility to repay federal assistance that is duplicated by amounts available from insurance or any other source for the same purpose. The FEMA and/or NMDHSEM may at any time, pre-award or post-award, adjust the level of funding provided to account for financial assistance provided from any other source for the same purpose as the federal assistance or to account for benefits available for the same purpose from another source, irrespective of whether they are actually received. The sub-recipient shall notify NMDHSEM, as soon as practicable, of the existence of any insurance coverage for the costs identified in the application and of any entitlement to or recovery of funds from any other source for the project costs, including Small Business Administration funding, United States Department of Agriculture (USDA), and other Federal, State, and private funding. The amount of duplicate sources available shall reduce allowable costs. The sub-recipient shall be liable to NMDHSEM to the extent that the sub-recipient receives duplicate benefits from any other source for the same purposes for which the sub-recipient has received payment from the NMDHSEM.

C. Cooperation. The NMDHSEM agrees, on its behalf and on behalf of its political subdivisions and others that receive federal assistance, to cooperate with the Federal Government in seeking recovery of federal assistance against any party or parties whose intentional acts or omissions or whose negligence or other tortious conduct may have caused or contributed to the damage or hardship for which federal assistance was provided under this Sub-recipient Grant Agreement. If applicable, FEMA will treat recovered funds as duplicated benefits available to NMDHSEM/sub-recipient in accordance with Section 312 of the Stafford Act (codified as amended at 42 U.S.C. § 5155).

D. NMDHSEM Responsibilities. The NMDHSEM is responsible for recovering federal assistance expended in error, misrepresentation, fraud, or for costs otherwise disallowed or unused.

a. The NMDHSEM must notify FEMA of any potential debt as a result of federal funds expended in error, misrepresentation, fraud, or for costs otherwise disallowed or unused.

b. The NMDHSEM must report all cases of suspected fraud to the USDHS Office of Inspector General. The NMDHSEM must cooperate with any investigation conducted by the USDHS Office of Inspector General. The NMDHSEM must cooperate with FEMA regarding any and all lawsuits that may result from the NMDHSEM or FEMA's attempt to recover funds or disallow costs.

E. Statute of Limitations. The 3-year statute of limitations limiting FEMA's ability to initiate an administrative action to recover funds paid as provided for in Section 705(a) of the Stafford Act (codified as amended at 42 U.S.C. § 5205(a)) begins with:

a. Initiation of an Administrative Action to Recover Payment. The initiation of an administrative action to recover payment includes FEMA's written notice to the NMDHSEM or a sub-recipient of a questioned or disallowed cost or improper payment (including a request for information concerning such cost or payment) and written notice to the NMDHSEM or a sub-recipient of a FEMA or 3rd party review or audit.

F. Refunds, Rebates, and Credits. The NMDHSEM must transfer to FEMA the appropriate share, based on the federal support percentage, of any refund, rebate, credit or other amounts arising from the performance of this Sub-recipient Grant Agreement. The NMDHSEM must take necessary action to promptly collect all monies due or which may become due and if applicable, to cooperate with the Federal Government in any claim or suit in connection with amounts due.

G. Non-Compliant Sub-recipients. As per 2 C.F.R. §§ 200.207, 200.303(d) and 200.338(A-F), NMDHSEM can selectively use any or all the following remedies and prompt actions for non-compliance with any term of an award to include audit finding(s):

- **a.** Increased monitoring of projects and require additional financial and performance reports.
- **b.** Disallow advance payment process.
- **c.** Temporarily withhold payments pending correction of the deficiency.
- **d.** Disallow or deny use of funds and matching credit for all or part of the cost of the activity or action not in compliance.
- **e.** Request FEMA to completely or partially de-obligate funding for a project.
- **f.** Temporarily withhold payments pending correction of the deficiency by the sub-recipient.
- **g.** Withhold further awards for the grant program.
- **h.** Take other programmatic or legally available remedies.

ARTICLE 8: CONSTRUCTION REQUIREMENTS

A. The NMDHSEM must ensure that all applicable federal, state, and local permits and approvals are obtained, and all permit conditions are addressed before the start of any construction activity, including FEMA and NMDHSEM/sub-recipient compliance with the National Environmental Policy Act, the National Historic Preservation Act, the Endangered Species Act, and all other applicable environmental laws and executive orders. All construction should be in accordance with approved permits, projects plans and specifications, applicable building codes, and program guidance.

ARTICLE 9: NATIONAL ENVIRONMENTAL POLICY ACT (NEPA)/ENVIRONMENTAL PLANNING AND HISTORIC PRESERVATION (EHP) COMPLIANCE

A. The sub-recipient must provide information to FEMA the legally required environmental planning and historic preservation (EHP) review and to ensure compliance with the applicable EHP laws and Executive Orders (EO). These EHP requirements include but are not limited to National Environmental Policy Act, National Historic Preservation Act, Endangered Species Act, E 11988 Floodplain Management, EO 11990 Protection of Wetlands, and EO 12898 Environmental Justice. The sub-recipient must comply with all federal, state, local, tribal, and territorial EHP requirements and obtain applicable permits and clearances.

B. Sub-recipients shall not undertake any activity from the project that would result in ground disturbance, facility modification, or relates to the use of sonar equipment without the prior approval of FEMA. These include but are not limited to communications towers, physical security enhancements involving ground

disturbance, new construction, and modifications to buildings that are 50 years old or older, and exercises. The sub-recipient must comply with all mitigation or treatment measures required for the project as the result of FEMA's EHP review. An EHP Screening Form does not need to be provided for those exercises that are planned to take place at previously approved facilities, such as, fire and police academies, search and rescue training facilities, and explosive testing centers. Any type of exercise that requires any type of land, water, or vegetation disturbance or building of temporary structures must undergo an EHP review.

C. Any change to an approved project description will require re-evaluation for compliance with EHP requirements before the project can proceed. If ground disturbing activities occur during project implementation, the sub-recipient must ensure monitoring of ground disturbance and if any potential archeological resources are discovered, the sub-recipient will immediately cease construction in that area and notify NMDHSEM, FEMA and the New Mexico Historic Preservation Division. Initiation of these activities prior to completion of FEMA's EHP review will result in a non-compliance finding and may result in ineligibility of grant funding.

ARTICLE 10: PROPERTY AND EQUIPMENT MANAGEMENT

A. The sub-recipient will follow the property standards articulated in 2 C.F.R. § 200.310 through 2 CFR 200.326. The sub-recipient shall, when practical, prominently display the following on any equipment purchased with award funds: **PURCHASED WITH FUNDS PROVIDED BY THE FEDERAL EMERGENCY MANAGEMENT AGENCY.** No equipment purchased with these grant funds may be assigned to other entities or organizations without the expressed approval in writing from DHSEM prior to the jurisdiction's encumbrance or expenditure for that equipment.

B. The subrecipient will follow the property standards articulated in 2 C.F.R. § 200.310 through 2 C.F.R. § 200.326. The subrecipient shall maintain an effective property management system; safeguards to prevent loss, damage or theft; maintenance procedures to keep equipment in good condition; and disposition procedures. A Property Inventory Report shall be submitted to NMDHSEM annually each January 30 with the Financial Progress Report during the performance period, and continued submission is required annually until final disposition of the equipment. The subrecipient shall, when practical, prominently display the following on any equipment purchased with award funds: Purchased with funds provided by the U.S. Department of Homeland Security. No equipment purchased with these grant funds may be assigned to other entities or organizations without the expressed approval in writing from NMDHSEM, prior to the jurisdiction's encumbrance or expenditure for that equipment.

C. Any disposition of property or equipment must be in accordance with 2 C.F.R. § 200.313(e) and pre-approved by FEMA through NMDHSEM.

ARTICLE 11: SUBRECIPIENT MONITORING POLICY

A. In accordance with 2 C.F.R. § 200.328, NMDHSEM may periodically monitor a sub-recipient's projects to ensure that program goals, objectives, timelines, budgets, and other related program criteria are being met. The NMDHSEM reserves the right to periodically review and conduct analysis of the sub-recipient's financial, programmatic, and administrative policies and procedures. This monitoring may include review of accounting for receipts and expenditures, cash management, maintaining adequate financial records, means of allocating and tracking costs, contracting, procurement, records management, payroll, means of allocating staff costs, property and equipment management system, progress of project activities, etc. This may include unscheduled desk audits and field inspections. The sub-recipient shall accommodate all such requests within reason. If the sub-recipient encounters any unanticipated problem with the Scope of Work, allowed costs, procurement, permitting, or other difficulty, the sub-recipient must communicate that problem to NMDHSEM promptly. Work on affected projects must be suspended until the problem is

resolved. Technical assistance is available from NMDHSEM staff.

B. The sub-recipient will immediately, no later than 24-hours upon notice, report to NMDHSEM allegations of wrong-doing on the part of any contractor, sub-contractor, agent or employee of the sub-recipient, or other interested party in reference to the work authorized under this Sub-recipient Grant Agreement. This extends to any legal action, lawsuit, bankruptcy, or other action that may jeopardize the successful completion of any authorized project.

ARTICLE 12: PROCUREMENT

A. Procurement shall comply with all federal, state, and local procurement requirements including 2 C.F.R. § 200.320 and the New Mexico Procurement Code for expenditure of funds under this Agreement. The Applicant must conform to applicable state and federal law and the Procurement Standards Sections 2 C.F.R. § 200.317-326, and Appendix II. Contractors that develop or draft specifications, requirements, Statements of Work, and/or Requests for Proposals (RFP) for a proposed procurement shall be excluded from bidding or submitting a proposal to compete for the award of such procurement. Local bidder's preference is not allowed for federally funded procurements. Procurement transactions shall be conducted to provide maximum open and free competition.

B. When procuring property and services under this agreement, the sub-recipient will follow 2 C.F.R. § 200.318 through 2 C.F.R. § 200.326 and Appendix II. The sub-recipient must use its own documented procurement procedures which reflect applicable state, local, tribal, and territorial laws, and regulations, provided that the procurements conform to applicable federal law and the standards identified in 2 C.F.R. § 200. As such, the sub-recipient must use one of the methods of procurement identified in 2 C.F.R. § 200.320.

C. Also, per 2 C.F.R. § 200.318(i), subrecipients are required to maintain and retain records sufficient to detail the history of procurement covering at least the rationale for the procurement method, selection of contract type, contractor selection or rejection, and the basis for the contract price. States and territories are encouraged to maintain and retain this information as well and are reminded that in order for any cost to be allowable, it must be adequately documented per 2 C.F.R. § 200.403(g). Examples of the types of documents that would cover this information include but are not limited to:

- **a.** Solicitation documentation, such as requests for quotes, invitations for bids, or requests for proposals;
- **b.** Responses to solicitations, such as quotes, bids, or proposals;
- **c.** Pre-solicitation independent cost estimates and post-solicitation cost/price analyses on file for review by federal personnel, if applicable;
- **d.** Contract documents and amendments, including required contract provisions; and
- **e.** Other documents required by federal regulations applicable at the time a subgrant is awarded to a subrecipient.

D. Procurement from Minority Owned and Women Owned Business is encouraged and must be tracked and reported to NMDHSEM on the quarterly reports. Procurement transactions shall be conducted to provide maximum open and free competition. Each sole–source procurement single vendor response to a competitive bid, and all purchases require prior approval of NMDHSEM.

E. The sub-recipient will follow the property standards articulated in 2 C.F.R. § 200.310 through 2 C.F.R. § 200.326. The sub-recipient shall maintain an effective property management system; safeguards to prevent loss, damage or theft; maintenance procedures to keep equipment in good condition; and disposition procedures. Property and equipment records shall be maintained for a period of three years following the final disposition, replacement or transfer of the property and equipment.

ARTICLE 13: CONTRACTS

A. Contractors that develop or draft specifications, requirements, Statements of Work, and/or Requests for Proposals (RFP) for a proposed procurement shall be excluded from bidding or submitting a proposal to compete for the award of such procurement. Local bidder's preference is not allowed for federally funded procurements. Procurement transactions shall be conducted to provide maximum open and free competition. Each sole–source procurement, single vendor response to a competitive bid, and all purchases require prior approval of DHSEM.

B. Any contract shall comply with the requirements of Procurement Standards Sections of 28 C.F.R. Parts 66 and 70, 2 C.F.R. Part 200 and OMB Circulars A–102 "Uniform Administrative Requirements for Grants and Cooperative Agreements with State and Local Governments" for expenditure of Federal funds under this Sub-recipient Grant Agreement. Applicants shall submit procurement and contracts to NMDHSEM for review prior to approval. Contracts for professional services must meet applicable local, state, and federal requirements. All contractors must be licensed in New Mexico for the type of work that is required. Prior to any contracted work beginning, the sub-recipient shall provide NMDHSEM with a copy of the contractor's license. Contract work must not exceed the scope of work and PW awarded amount prescribed by FEMA, unless requested through a scope of work change and approval from FEMA.

C. Any contract entered during this sub-grant period shall comply with local, State, and Federal government contracting regulations. Professional and consultant services contracts must include local, State, and Federal government-required contract language, a project budget, SOW, and a pay schedule. ***All contracts require pre-approval by DHSEM prior to execution.*** Contract deliverables must meet the intent of the grant application and grant requirements. Justification is required for compensation for individual consultant services, which must be reasonable and consistent with the amount paid for similar services in the marketplace. Detailed invoices and time and effort reports are required for consultants.

ARTICLE 14: COMPETITION AND CONFLICTS OF INTEREST

A. Among the requirements of 2 C.F.R. § 200.319(b) applicable to all non-federal entities other than states, in order to ensure objective contractor performance and eliminate unfair competitive advantage, contractors that develop or draft specifications, requirements, statements of work, or invitations for bids or requests for proposals must be excluded from competing for such procurements. The FEMA considers these actions to be an organizational conflict of interest and interprets this restriction as applying to contractors that help a subrecipient develop its grant application, project plans or project budget. This prohibition also applies to the use of former employees to manage the grant or carry out a contract when those former employees worked on such activities while they were employees of the non-federal entity.

B. Under this prohibition, unless the subrecipient solicits for and awards a contract covering both development and execution of specifications (or similar elements as described above), and this contract was procured in compliance with 2 C.F.R. §§ 200.317 – 200.327, federal funds cannot be used to pay a contractor to carry out the work if that contractor also worked on the development of those specifications. This rule applies to all contracts funded with federal grant funds, including pre-award costs, such as grant writer fees, as well as post-award costs, such as grant management fees. Additionally, some of the situations considered to be restrictive of competition include, but are not limited to:

- **a.** Placing unreasonable requirements on firms for them to qualify to do business;
- **b.** Requiring unnecessary experience and excessive bonding;
- **c.** Noncompetitive pricing practices between firms or between affiliated companies;
- **d.** Noncompetitive contracts to consultants that are on retainer contracts;
- **e.** Organizational conflicts of interest;

f. Specifying only a "brand name" product instead of allowing "an equal" product to be offered and describing the performance or other relevant requirements of the procurement; and

g. Any arbitrary action in the procurement process.

C. Per 2 C.F.R. § 200.319(c), the subrecipient must conduct procurements in a manner that prohibits the use of statutorily or administratively imposed state, local, tribal, or territorial geographical preferences in the evaluation of bids or proposals, except in those cases where applicable federal statutes expressly mandate or encourage geographic preference. Nothing in this section preempts state licensing laws. **When contracting for architectural and engineering services, geographic location may be a selection criterion, provided its application leaves an appropriate number of qualified firms, given the nature and size of the project, to compete for the contract.**

D. Under 2 C.F.R. § 200.318(c)(1), the subrecipient is required to maintain written standards of conduct covering conflicts of interest and governing the actions of their employees engaged in the selection, award, and administration of contracts. **No employee, officer, or agent may participate in the selection, award, or administration of a contract supported by a federal award if he or she has a real or apparent conflict of interest.** Such conflicts of interest would arise when the employee, officer or agent, any member of his or her immediate family, his or her partner, or an organization that employs or is about to employ any of the parties indicated herein, has a financial or other interest in or a tangible personal benefit from a firm considered for a contract. The non-federal entity's officers, employees, and agents may neither solicit nor accept gratuities, favors, or anything of monetary value from contractors or parties to subcontracts. However, subrecipient entities may set standards for situations in which the financial interest is not substantial, or the gift is an unsolicited item of nominal value. The standards of conduct must provide for disciplinary actions to be applied for violations of such standards by officers, employees, or agents of the non-federal entity.

E. Under 2 C.F.R. § 200.318(c)(2), if the subrecipient has a parent, affiliate, or subsidiary organization that is not a state, local, tribal or territorial government, the subrecipient must also maintain written standards of conduct covering organizational conflicts of interest. In this context, organizational conflict of interest means that because of a relationship with a parent company, affiliate, or subsidiary organization, the subrecipient is unable or appears to be unable to be impartial in conducting a procurement action involving a related organization. The non-federal entity must disclose in writing any potential conflicts of interest to FEMA or NMDHSEM in accordance with applicable FEMA policy.

ARTICLE 15: CONTRACTS

A. Contracts for professional and consultant services executed during this grant period must include federal, state, local, tribal, and territorial government required contract language, a project budget, and require pre-approval by NMDHSEM prior to implementation. Contract deliverables must meet the intent of the grant application and grant requirements. Justification is required for compensation for individual consultant services, which must be reasonable and consistent with the amount paid for similar services in the marketplace. Detailed invoices and time and effort reports are required for consultants. *See* 2 C.F.R. § 200.1, 2 C.F.R. § 200 Appendix II to Part 200.

ARTICLE 16: AUDIT REQUIREMENTS

A. As a federal grant recipient, the State of New Mexico requires a sub-recipient expending $750,000 or more in federal funds in the organization's fiscal year to conduct an organization–wide audit in accordance with the Single Audit described in 2 C.F.R. § 200.501. The sub-recipient will permit state or federal officials and auditors to have access to sub-recipient and contractor records and financial statements as necessary for

the state to comply with 2 C.F.R. § 200.501. Copies of audit findings must be submitted to NMDHSEM within 30 days after the sub-recipient receives its audit report, or within a 9-month period of the grant closeout date, whichever is earlier. Include the federal agency name, program, grant number, the CFDA title and number, and the name of the pass-through agency (NMDHSEM) in all documents.

ARTICLE 17: RECORDS RETENTION

A. Records Retention.

a. **State Requirement.** The State must retain records for three years after all projects are complete and the federal disaster is formally closed out, except in certain rare circumstances described in 2 C.F.R. § 200.334 (Retention requirements for records), from the date it submits the final Federal Financial Report (SF-425) to FEMA in compliance with 2 C.F.R. § 200.334. If FEMA administratively closes the grant where no final SF-425 was submitted, FEMA uses the date the grant was administratively closed as the start date for the three-year record retention period.

b. **Sub-recipient Requirement.** The sub-recipients must retain project or subaward records for at least three years from the date that the NMDHSEM submits to FEMA the final expenditure report for a project or subaward. If, however, there is any litigation, claim, negotiation, audit, request for information, or other action involving the project or subaward that starts before that date, the records must be retained until completion of the action and resolution of all issues which arise from it, or until the end of the three-year period, whichever is later.

c. The sub-recipient will follow the record retention and access standards articulated in 2 C.F.R. § 200.333 through 2 C.F.R. § 200.337. The grant financial and administrative records shall be maintained for a period of three years following the date of the closure of the grant award, or audit if required. Time and effort, personnel and payroll records for all individuals reimbursed under the award must be maintained. Property and equipment records shall be maintained for a period of three years following the final disposition, replacement or transfer of the property and equipment.

d. The sub-recipient will be required to maintain project records until the expiration of the appropriate retention period. This includes records related to Management Costs, procurement, contracting, accounts payable, engineering, inventory, force account (materials, labor, and equipment), insurance settlements or other records related to the project scope of work. Retention procedures are outlined in the Hazard Mitigation Assistance Grant Programs Administrative Plan.

ARTICLE 18: CHANGES TO AWARD

A. All change requests must be submitted either in writing or electronically to the NMDHSEM contact for review 90 days prior to the termination of this Sub-recipient Grant Agreement. All change requests must be accompanied by a justification narrative and a budget and spending plan. All change requests must be consistent with the scope of the project and grant guidelines. Change requests will be considered only if reporting requirements are current, and all other terms and conditions of this Sub-recipient Grant Agreement have otherwise been met at the time of the request. If approved by NMDHSEM and FEMA, changes in the programmatic activities, purpose of the project, key personnel specified on the grant award, contractual services for activities central to the purposes of the award, change in project site, or release of special conditions, will result in an amendment to this award. Requests for changes must be formally submitted to NMDHSEM and FEMA.

B. Changes to this Sub-recipient Grant Agreement will be made via a Sub-recipient Grant Agreement Amendment. The NMDHSEM will prepare each Amendment when needed. No Sub-recipient Grant

Agreement Amendment is valid until fully executed.

ARTICLE 19: REMEDIES FOR NONCOMPLIANCE

A. For the reasons listed below, special conditions may be imposed, reimbursements may be partially or wholly withheld, the award may be wholly or partly suspended or terminated, or future awards, reimbursements and award modifications may be withheld. The NMDHSEM may institute the following, but is not limited to, withholding authority to proceed to the next phase of a project, requiring additional or more detailed financial reports, additional project monitoring, and/or establish additional prior approvals. The NMDHSEM shall notify the sub-recipient of its decision in writing stating the nature and the reason for imposing the conditions/restrictions, the corrective action required and timeline to remove them, and the method of requesting reconsideration of the imposed conditions/restrictions. The sub-recipient must respond within five days of receipt of notification.

- **a.** Unwillingness or inability to attain project goals or scope of work.
- **b.** Unwillingness or inability to adhere to Special Conditions of this Sub-recipient Grant Agreement.
- **c.** Failure or inability to adhere to grant guidelines and federal compliance requirements.
- **d.** Improper procedures regarding contracts and procurements.
- **e.** Failure to submit reliable and/or timely reports.
- **f.** Fiscal management which does not meet reasonable professional standards.
- **g.** Failure or inability to adhere to the terms and conditions of this Sub-recipient Grant Agreement.
- **h.** Unwillingness or inability to obtain permits required by law to perform the eligible work.
- **i.** Noncompliance with any and all federal, state, local and tribal grant requirements.

B. The NMDHSEM shall notify the sub-recipient of any non-compliance issues in writing and shall attempt to arrive at a resolution in a timely and reasonable fashion. If corrective action is required, NMDHSEM and the sub-recipient shall determine a timeline and landmarks for remediation. The NMDHSEM may require additional detailed financial reports or additional project monitoring. The ultimate penalty for non-compliance with the terms and conditions of this Sub-recipient Grant Agreement is for payments to be withheld or for the award to be suspended or terminated. The sub-recipient agrees to make restitution if necessary.

C. The NMDHSEM may take action as it determines appropriate under the circumstances including but not limited to withholding of payments, disallowance of costs, suspension or termination of the award if the sub-recipient fails to comply with applicable Federal and State statutes, regulations, or the terms of this Sub-recipient Grant Agreement pursuant to 2 C.F.R. § 200.339.

D. Nothing in this section abrogates the sub-recipient's right of appeal.

ARTICLE 20: TERMINATION

A. **For Cause:** In compliance with 2 C.F.R. § Part 200.340(a)(1), if performance is not occurring as agreed, the award may be reduced or terminated without compensation for reduction or termination costs. The NMDHSEM will provide notice of five days to the subrecipient stating the reasons for the action, steps taken to correct the problems, and the commencement date of the reduction or termination. The NMDHSEM will reimburse the subrecipient only for acceptable work or deliverables, necessary and allowable costs incurred through the date of reduction or termination. Final payment may be withheld at the discretion of NMDHSEM until completion of a final NMDHSEM review. Disposition of any equipment acquired under a terminated grant must be in accordance with 2 C.F.R. § 200.313(e).

B. For Convenience: In compliance with 2 CFR Part 200.340(a)(4), this Agreement may be terminated without cause by the subrecipient upon written notice setting forth the reasons for such termination, and the effective date at least 30 days prior to the intended date of termination. A termination pursuant to this provision does not nullify a party's obligations for performance, or liabilities for failure to perform already incurred prior to the date of termination. Any project may be terminated upon convenience, in whole or in part, for the convenience of the subrecipient; though a partial termination notification must specify that portion of the project which is to be terminated. Allowable costs obligated and/or incurred through the date of termination shall be reimbursed. Disposition of any equipment acquired under a terminated grant must be in accordance with 2 C.F.R. § 200.313(e).

ARTICLE 21: CLOSEOUT OF SUB-GRANT

A. Closeout of Projects. Per 2 C.F.R. § 200.344, sub-recipients must submit all cost and supporting documentation for completed projects. The NMDHSEM will review and verify all costs and supporting documents to validate compliance. Failure to comply will result in de-obligation of the project. The NMDHSEM will close each sub-recipient file once it has conducted full review and approval of all supporting documents for compliance and all projects are completed and has project activity closed out.

a. Management Costs. Management Costs will be used for internal staff salaries, contractor payments and other support costs associated with this grant. This will be in accordance with all laws, rules, and FEMA regulations. Management Costs will be processed in accordance with the Hazard Mitigation Assistance Program and Policy Guide.

The NMDHSEM commits to closeout of all grants regardless of the availability of management costs.

ARTICLE 22: SPECIAL CONDITIONS

A. The terms of this Sub-recipient Grant Agreement are contingent upon sufficient appropriations and authorizations being made by the USDHS FEMA under the Robert T. Stafford Disaster Relief and Emergency Assistance Act U.S.C. §§ 5121-5207. If sufficient appropriations and authorizations are not made by FEMA this Sub-recipient Grant Agreement shall terminate immediately upon written notice being given by NMDHSEM to the sub-recipient. The decision of NMDHSEM shall be final.

B. If NMDHSEM proposes an Amendment to the Sub-recipient Grant Agreement to unilaterally reduce funding, the sub-recipient shall have the option to terminate the Sub-recipient Grant Agreement or agree to the reduced funding within 30 days of receipt of the proposed Amendment.

C. Each party shall be solely responsible for fiscal or other sanctions occasioned because of its own violation of requirements applicable to the performance of this Sub-recipient Grant Agreement. Each party shall be liable for its own actions or inactions in accordance with state law and nothing herein shall be deemed a waiver, indemnity or to otherwise create or effect liabilities between the parties.

D. The grant award amount is a funding allocation and is not to be interpreted as expenditure authorizations or approvals.

E. All awarded projects must be planned for, conducted, budgeted, and expended within the designated performance period.

F. Quarterly financial and progress reports are due on October 15, January 15, April 15, and July 15, within the POP. Final reports are due 15 days after the end of POP.

G. All revision requests must be reviewed and approved by NMDHSEM staff. All requests must meet the original scope of the project which may result in a sub-recipient grant amendment.

H. A revision of a project's SOW must be pre-approved by NMDHSEM staff before the jurisdiction can proceed with the request for approval process. If the revision is approved, NMDHSEM staff may request additional documentation to proceed with recommendation to NMDHSEM Leadership for final approval.

I. The beneficiary of this award is solely responsible for all expenditures that are incurred outside of the award performance period. All expenditures that are incurred above and beyond the amount of this Sub-recipient Grant Agreement are the sole responsibility of the sub-recipient of this award.

J. Procurement from Minority Owned and Women Owned Business is encouraged and must be tracked and reported to NMDHSEM on the quarterly reports.

K. Upon completion of all awarded projects, any remaining funds will be de-obligated and reverted to NMDHSEM for return to FEMA.

L. Extensions due to exigent or emergency circumstances will be determined by NMDHSEM on a case-by-case basis.

State of New Mexico
Department of Homeland Security & Emergency Management
P.O. Box 27111
Santa Fe, NM 87502

The acceptance of a subgrant from the United States and the State of New Mexico creates a legal duty and obligation on the part of the sub-recipient to use the funds or property made available in accordance with the conditions of the grant as administered by and through the New Mexico Department of Homeland Security and Emergency Management. By signing this obligating award document, the sub-recipient certifies it has read, understood, and accepted these documents as binding.

SUB-RECIPIENT GRANT AGREEMENT
Signatures of Acceptance

SUB-GRANT NO:			
JURISDICTION GRANT PROGRAM MANAGER PRINTED NAME:			
OFFICIAL SIGNATURE:		**DATE:**	
CONTACT NUMBER:		**E-MAIL ADDRESS:**	
JURISDICTION CHIEF FINANCIAL OFFICER PRINTED NAME:			
OFFICIAL SIGNATURE:		**Date:**	
CONTACT NUMBER:		**E-MAIL ADDRESS:**	
JURISDICTION SIGNATORY OFFICIAL PRINTED NAME:			
OFFICIAL SIGNATURE:		**DATE:**	
CONTACT NUMBER:		**E-MAIL ADDRESS:**	
NMDHSEM MITIGATION PROGRAM BUREAU CHIEF PRINTED NAME:			
NMDHSEM MITIGATION PROGRAM BUREAU CHIEF OFFICIAL SIGNATURE / DATE:			
NMDHSEM GRANTS MANAGEMENT BUREAU CHIEF PRINTED NAME:			
NMDHSEM GRANTS MANAGEMENT BUREAU CHIEF OFFICIAL SIGNATURE / DATE:			
NMDHSEM DEPUTY CABINET SECRETARY OFFICIAL PRINTED NAME:			
NMDHSEM DEPUTY CABINET SECRETARY OFFICIAL SIGNATURE / DATE:			

Print one original agreement, sign and email to: DHSEM.MITIGATION@DHSEM.nm.gov

CITY OF SANTA FE:

_____
ALAN WEBBER, MAYOR

DATE:_____

ATTEST:

_____
CITY CLERK

CITY ATTORNEY'S OFFICE:

_____
ASSISTANT CITY ATTORNEY

APPROVED FOR FINANCES:

Emily K. Oster 11/01/2024
_____
FINANCE DIRECTOR

The page is intentionally left blank.

ATTACHMENT 1
USDHS Standard Terms and Conditions
(January 24, 2022)

The Fiscal Year (FY) 2022 USDHS Standard Terms and Conditions apply to all new federal financial assistance awards funded in FY 2022. These terms and conditions flow down to sub-recipients unless an award term or condition specifically indicates otherwise. The United States has the right to seek judicial enforcement of these obligations.

All legislation and digital resources are referenced with no digital links. The FY 2022 USDHS Standard Terms and Conditions will be housed on dhs.gov at www.dhs.gov/publication/fy15-dhs- standard-terms-and-conditions.

A. Assurances, Administrative Requirements, Cost Principles, Representations and Certifications

I. USDHS financial assistance recipients must complete either the Office of Management and Budget (OMB) Standard Form 424B Assurances – Non-Construction Programs, or OMB Standard Form 424D Assurances – Construction Programs, as applicable. Certain assurances in these documents may not be applicable to your program, and the USDHS financial assistance office (USDHS FAO) may require applicants to certify additional assurances. Applicants are required to fill out the assurances as instructed by the awarding agency.

II. USDHS financial assistance recipients are required to follow the applicable provisions of the Uniform Administrative Requirements, Cost Principles, and Audit Requirements for Federal Awards located at Title 2, Code of Federal Regulations (C.F.R.) Part 200 and adopted by USDHS at 2 C.F.R. Part 3002.

III. By accepting this Agreement, recipients, and their executives, as defined in 2 C.F.R. § 170.315, certify that their policies are in accordance with OMB's guidance located at 2 C.F.R. Part 200, all applicable federal laws, and relevant Executive guidance.

B. General Acknowledgements and Assurances

All recipients, sub-recipients, successors, transferees, and assignees must acknowledge and agree to comply with applicable provisions governing USDHS access to records, accounts, documents, information, facilities, and staff.

I. Recipients must cooperate with any USDHS compliance reviews or compliance investigations conducted by USDHS.

II. Recipients must give USDHS access to examine and copy records, accounts, and other documents and sources of information related to the federal financial assistance award and permit access to facilities or personnel.

III. Recipients must submit timely, complete, and accurate reports to the appropriate USDHS officials and maintain appropriate backup documentation to support the reports.

IV. Recipients must comply with all other special reporting, data collection, and evaluation requirements, as prescribed by law, or detailed in program guidance.

V. Recipients (as defined in 2 C.F.R. Part 200 and including recipients acting as pass-through entities) of federal financial assistance from USDHS or one of its awarding component agencies must complete the USDHS Civil Rights Evaluation Tool within thirty (30) days of receipt of the Notice of Award for the first award under which this term applies. Recipients of multiple awards of USDHS financial assistance should only submit one completed tool for their organization, not per award. After the initial submission, recipients are required to complete the tool once every two (2) years if they have an active award, not every time an award is made. Recipients should submit the completed tool, including supporting materials, to CivilRightsEvaluation@hq.dhs.gov. This tool clarifies the civil rights obligations and related reporting requirements contained in the USDHS

Standard Terms and Conditions. Sub-recipients are not required to complete and submit this tool to USDHS. The evaluation tool can be found at https://www.dhs.gov/publication/dhs- civil-rights-evaluation-tool.

The USDHS Office for Civil Rights and Civil Liberties will consider, in its discretion, granting an extension if the recipient identifies steps and a timeline for completing the tool. Recipients should request extensions by emailing the request to CivilRightsEvaluation@hq.dhs.gov prior to expiration of the 30-day deadline.

C. Standard Terms & Conditions

I. Acknowledgement of Federal Funding from USDHS

Recipients must acknowledge their use of federal funding when issuing statements, press releases, requests for proposal, bid invitations, and other documents describing projects or programs funded in whole or in part with federal funds.

II. Activities Conducted Abroad

Recipients must ensure that project activities performed outside the United States are coordinated as necessary with appropriate government authorities and that appropriate licenses, permits, or approvals are obtained.

III. Age Discrimination Act of 1975

Recipients must comply with the requirements of the Age Discrimination Act of 1975, Public Law 94-135 (1975) (codified as amended at Title 42, U.S. Code, § 6101 et seq.), which prohibits discrimination on the basis of age in any program or activity receiving federal financial assistance.

IV. Americans with Disabilities Act of 1990

Recipients must comply with the requirements of Titles I, II, and III of the Americans with Disabilities Act, Pub. L. 101-336 (1990) (codified as amended at 42 U.S.C. §§ 12101– 12213), which prohibits recipients from discriminating on the basis of disability in the operation of public entities, public and private transportation systems, places of public accommodation, and certain testing entities.

V. Best Practices for Collection and Use of Personally Identifiable Information

Recipients who collect personally identifiable information (PII) are required to have a publicly available privacy policy that describes standards on the usage and maintenance of the PII they collect. USDHS defines PII as any information that permits the identity of an individual to be directly or indirectly inferred, including any information that is linked or linkable to that individual. Recipients may also find the USDHS Privacy Impact Assessments: Privacy Guidance and Privacy Template as useful resources respectively.

VI. Civil Rights Act of 1964 – Title VI

Recipients must comply with the requirements of Title VI of the Civil Rights Act of 1964 (codified as amended at 42 U.S.C. § 2000d et seq.), which provides that no person in the United States will, on the grounds of race, color, or national origin, be excluded from participation in, be denied the benefits of, or be subjected to discrimination under any program or activity receiving federal financial assistance. USDHS implementing regulations for the Act are found at 6 C.F.R. Part 21 and 44 C.F.R. Part 7.

VII. Civil Rights Act of 1968

Recipients must comply with Title VIII of the Civil Rights Act of 1968, Pub. L. 90-284, as amended through Pub. L. 113-4, which prohibits recipients from discriminating in the sale, rental, financing, and advertising of dwellings, or in the provision of services in connection therewith, on the basis of race, color, national origin, religion, disability, familial status, and sex (see 42 U.S.C. § 3601 et seq.), as implemented by the U.S. Department of Housing and Urban Development at 24 C.F.R. Part 100. The prohibition on disability discrimination includes the requirement that new multifamily housing with four or more dwelling units—i.e., the public and common use areas and individual apartment units (all units in buildings with elevators and ground-floor units in buildings without elevators)—be designed and constructed with certain accessible features. (See 24 C.F.R. Part 100, Subpart D.)

VIII. Copyright

Recipients must affix the applicable copyright notices of 17 U.S.C. §§ 401 or 402 and an acknowledgement of U.S. Government sponsorship (including the award number) to any work first produced under federal financial assistance awards.

IX. Debarment and Suspension

Recipients are subject to the non-procurement debarment and suspension regulations implementing Executive Orders (E.O.) 12549 and 12689, which are at 2 C.F.R. Part 180 as adopted by USDHS at 2 C.F.R. Part 3002. These regulations restrict federal financial assistance awards, subawards, and contracts with certain parties that are debarred, suspended, or otherwise excluded from or ineligible for participation in federal assistance programs or activities.

X. Drug-Free Workplace Regulations

Recipients must comply with drug-free workplace requirements in Subpart B (or Subpart C, if the recipient is an individual) of 2 C.F.R. Part 3001, which adopts the Government-wide implementation (2 C.F.R. Part 182) of Sec. 5152-5158 of the Drug-Free Workplace Act of 1988 (41 U.S.C. §§ 8101-8106).

XI. Duplication of Benefits

Any cost allocable to a particular federal financial assistance award provided for in 2 C.F.R. Part 200, Subpart E may not be charged to other federal financial assistance awards to overcome fund deficiencies; to avoid restrictions imposed by federal statutes, regulations, or federal financial assistance award terms and conditions; or for other reasons. However, these prohibitions would not preclude recipients from shifting costs that are allowable under two or more awards in accordance with existing federal statutes, regulations, or the federal financial assistance award terms and conditions may not be charged to other federal financial assistance awards to overcome fund deficiencies; to avoid restrictions imposed by federal statutes, regulations, or federal financial assistance award terms and conditions; or for other reasons.

XII. Education Amendments of 1972 (Equal Opportunity in Education Act) – Title IX

Recipients must comply with the requirements of Title IX of the Education Amendments of 1972, Pub. L. 92-318 (1972) (codified as amended at 20 U.S.C. § 1681 et seq.), which provide that no person in the United States will, on the basis of sex, be excluded from participation in, be denied the benefits of, or be subjected to discrimination under any educational program or activity receiving federal financial assistance. USDHS implementing regulations are codified at 6 C.F.R. Part 17 and 44 C.F.R. Part 19.

XIII. Energy Policy and Conservation Act

Recipients must comply with the requirements of the Energy Policy and Conservation Act, Pub. L. 94- 163 (1975) (codified as amended at 42 U.S.C. § 6201 et seq.), which contain policies relating to energy efficiency that are defined in the state energy conservation plan issued in compliance with this Act.

XIV. Ensuring the Future is Made in All of America by All of America's Workers

Recipients must comply with the "Build America, Buy America" provisions of the Infrastructure Investment and Jobs Act and E.O. 14005 which provide that, as appropriate and to the extent consistent with law, the recipient must use all practicable means within their authority under a federal award to provide a preference for the purchase, acquisition, or use of goods, products, or materials produced in the United States (including but not limited to iron, aluminum, steel, cement, and other manufactured products.)

XV. False Claims Act and Program Fraud Civil Remedies

Recipients must comply with the requirements of the False Claims Act, 31 U.S.C. §§3729- 3733, which prohibit the submission of false or fraudulent claims for payment to the Federal Government. (See 31 U.S.C. §§ 3801-3812, which details the administrative remedies for false claims and statements made.)

XVI. Federal Debt Status

All recipients are required to be non-delinquent in their repayment of any federal debt. Examples of relevant debt include delinquent payroll and other taxes, audit disallowances, and benefit overpayments. (See OMB Circular A-129.)

XVII. Federal Leadership on Reducing Text Messaging while Driving

Recipients are encouraged to adopt and enforce policies that ban text messaging while driving as described in E.O. 13513, including conducting initiatives described in Section 3(a) of the Order when on official government business or when performing any work for or on behalf of the Federal Government.

XVIII. Fly America Act of 1974

Recipients must comply with Preference for U.S. Flag Air Carriers (air carriers holding certificates under 49 U.S.C.) for international air transportation of people and property to the extent that such service is available, in accordance with the International Air Transportation Fair Competitive Practices Act of 1974, 49 U.S.C. § 40118, and the interpretative guidelines issued by the Comptroller General of the United States in the March 31, 1981, amendment to Comptroller General Decision B-138942.

XIX. Hotel and Motel Fire Safety Act of 1990

Recipients must ensure that all conference, meeting, convention, or training space funded in whole or in part with federal funds complies with the fire prevention and control guidelines of Section 6 of the Hotel and Motel Fire Safety Act of 1990, 15 U.S.C. § 2225a.

XX. John S. McCain National Defense Authorization Act of Fiscal Year 2019

Recipients, sub-recipients, and their contractors and subcontractors are subject to the prohibitions described in section 889 of the John S. McCain National Defense Authorization Act for Fiscal Year 2019, Pub. L. No. 115-232 (2018) and 2 C.F.R. §§ 200.216, 200.327, 200.471, and Appendix II to 2 C.F.R. Part 200. Beginning August 13, 2020, the statute – as it applies to USDHS recipients, sub-recipients, and their contractors and subcontractors – prohibits obligating or expending federal award funds on certain telecommunications and video surveillance products

and contracting with certain entities for national security reasons.

XXI. Limited English Proficiency (Civil Rights Act of 1964, Title VI)

Recipients must comply with Title VI of the Civil Rights Act of 1964, (42 U.S.C. § 2000d et seq.) prohibition against discrimination on the basis of national origin, which requires that recipients of federal financial assistance take reasonable steps to provide meaningful access to persons with limited English proficiency (LEP) to their programs and services. For additional assistance and information regarding language access obligations, please refer to the USDHS Recipient Guidance: https://www.dhs.gov/guidance- published-help- department- supported-organizations-provide-meaningful-access-people-limited and additional resources on http://www.lep.gov.

XXII. Lobbying Prohibitions

Recipients must comply with 31 U.S.C. § 1352, which provides that none of the funds provided under a federal financial assistance award may be expended by the recipient to pay any person to influence, or attempt to influence an officer or employee of any agency, a Member of Congress, an officer or employee of Congress, or an employee of a Member of Congress in connection with any federal action related to a federal award or contract, including any extension, continuation, renewal, amendment, or modification.

XXIII. National Environmental Policy Act

Recipients must comply with the requirements of the National Environmental Policy Act of 1969, (NEPA) Pub. L. 91-190 (1970) (codified as amended at 42 U.S.C. § 4321 et seq. and the Council on Environmental Quality (CEQ) Regulations for Implementing the Procedural Provisions of NEPA, which require recipients to use all practicable means within their authority, and consistent with other essential considerations of national policy, to create and maintain conditions under which people and nature can exist in productive harmony and fulfill the social, economic, and other needs of present and future generations of Americans.

XXIV. Nondiscrimination in Matters Pertaining to Faith-Based Organizations

It is USDHS policy to ensure the equal treatment of faith-based organizations in social service programs administered or supported by USDHS or its component agencies, enabling those organizations to participate in providing important social services to beneficiaries. Recipients must comply with the equal treatment policies and requirements contained in 6 C.F.R. Part 19 and other applicable statues, regulations, and guidance governing the participations of faith-based organizations in individual USDHS programs.

XXV. Non-Supplanting Requirement

Recipients receiving federal financial assistance awards made under programs that prohibit supplanting by law must ensure that federal funds do not replace (supplant) funds that have been budgeted for the same purpose through non-federal sources.

XXVI. Notice of Funding Opportunity Requirements

All the instructions, guidance, limitations, and other conditions set forth in the Notice of Funding Opportunity (NOFO) for this program are incorporated here by reference in the award terms and conditions. All recipients must comply with any such requirements set forth in the program NOFO.

XXVII. Patents and Intellectual Property Rights

Recipients are subject to the Bayh-Dole Act, 35 U.S.C. § 200 et seq, unless otherwise provided by law. Recipients are subject to the specific requirements governing the development, reporting, and disposition of rights to inventions and patents resulting from federal financial assistance awards located at 37 C.F.R. Part 401 and the standard patent rights clause located at 37 C.F.R. § 401.14.

XXVIII. Procurement of Recovered Materials

States, political subdivisions of states, and their contractors must comply with Section 6002 of the Solid Waste Disposal Act, Pub. L. 89-272 (1965), (codified as amended by the Resource Conservation and Recovery Act, 42 U.S.C. § 6962.) The requirements of Section 6002 include procuring only items designated in guidelines of the Environmental Protection Agency (EPA) at 40 C.F.R. Part 247 that contain the highest percentage of recovered materials practicable, consistent with maintaining a satisfactory level of competition.

XXIX. Rehabilitation Act of 1973

Recipients must comply with the requirements of Section 504 of the Rehabilitation Act of 1973, Pub. L. 93-112 (1973), (codified as amended at 29 U.S.C. § 794,) which provides that no otherwise qualified handicapped individuals in the United States will, solely by reason of the handicap, be excluded from participation in, be denied the benefits of, or be subjected to discrimination under any program or activity receiving federal financial assistance.

XXX. Reporting of Matters Related to Recipient Integrity and Performance General Reporting Requirements.

If the total value of any currently active grants, cooperative agreements, and procurement contracts from all federal awarding agencies exceeds $10,000,000 for any period of time during the period of performance of this federal award, then the recipients must comply with the requirements set forth in the government-wide Award Term and Condition for Recipient Integrity and Performance Matters located at 2 C.F.R. Part 200, Appendix XII, the full text of which is incorporated here by reference in the award terms and conditions.

XXXI. Reporting Subawards and Executive Compensation Reporting of first tier subawards.

Recipients are required to comply with the requirements set forth in the government-wide award term on Reporting Subawards and Executive Compensation located at 2 C.F.R. Part 170, Appendix A, the full text of which is incorporated here by reference in the award terms and conditions.

XXXII. SAFECOM

Recipients receiving federal financial assistance awards made under programs that provide emergency communication equipment and its related activities must comply with the SAFECOM Guidance for Emergency Communication Grants, including provisions on technical standards that ensure and enhance interoperable communications.

XXXIII. Terrorist Financing

Recipients must comply with E.O. 13224 and U.S. laws that prohibit transactions with, and the provisions of resources and support to, individuals and organizations associated with terrorism. Recipients are legally responsible to ensure compliance with the Order and laws.

XXXIV. Trafficking Victims Protection Act of 2000 (TVPA) Trafficking in Persons.

Recipients must comply with the requirements of the government-wide financial assistance award term which implements Section 106 (g) of the Trafficking Victims Protection Act of 2000 (TVPA), codified as amended at 22 U.S.C. § 7104. The award term is located at 2 C.F.R. § 175.15,

the full text of which is incorporated here by reference.

XXXV. Universal Identifier and System of Award Management

Requirements for System for Award Management and Unique Entity Identifier Recipients are required to comply with the requirements set forth in the government-wide financial assistance award term regarding the System for Award Management and Universal Identifier Requirements located at 2 C.F.R. Part 25, Appendix A, the full text of which is incorporated here by reference.

XXXVI. USA PATRIOT Act of 2001

Recipients must comply with requirements of Section 817 of the Uniting and Strengthening America by Providing Appropriate Tools Required to Intercept and Obstruct Terrorism Act of 2001 (USA PATRIOT Act), which amends 18 U.S.C. §§ 175–175c.

XXXVII. Use of USDHS Seal, Logo and Flags

Recipients must obtain permission from their USDHS FAO prior to using the USDHS seal(s), logos, crests or reproductions of flags or likenesses of USDHS agency officials, including use of the United States Coast Guard seal, logo, crests or reproductions of flags or likenesses of Coast Guard officials.

XXXVIII. Whistleblower Protection Act

Recipients must comply with the statutory requirements for whistleblower protections (if applicable) at 10 U.S.C § 2409, 41 U.S.C. § 4712, and 10 U.S.C. § 2324, 41 U.S.C. §§ 4304 and 4310.

The remainder of this page is intentionally left blank.

ATTACHMENT 2
Reimbursement Checklist

DHSEM reserves the right to update this check list throughout the life of the grant to ensure compliance with applicable federal and state rules and regulations. ***Please only check the categories that apply to the reimbursement you are currently requesting.***

EQUIPMENT

- ☐ Have all invoices been included?
- ☐ Has AEL # been identified for each purchase?
- ☐ If service/warranty expenses are listed, are they only for the performance period of the grant?
- ☐ Has proof of payment been included? (e.g., canceled check, Electronic Funds Transfer (EFT) confirmation, or P-Card back up documentation which will include receipt with vendor, copy of credit card statement showing expense charged, and payment to credit card Company for that statement)

CONSULTANTS/CONTRACTORS

- ☐ Does the amount billed by consultant add up correctly?
- ☐ Has all appropriate documentation to denote hours worked been properly signed?
- ☐ Have copies of all planning materials and work product (e.g., meeting documents, copies of plans) been included? (If a meeting was held by recipient or contractor/consultant of recipient, an agenda and signup sheet with meeting date must be included).
- ☐ Has the invoice from consultant/contractor been included?
- ☐ Has proof of payment been included? (e.g., canceled check, Electronic Funds Transfer (EFT) confirmation, or P-Card back up documentation which will include receipt with vendor, copy of credit card statement showing expense charged, and payment to credit card Company for that statement).

SALARY POSITIONS (Note: this applies to positions billed under M&A)

- ☐ Have the following been provided: signed time sheet by employee and supervisor and proof that employee was paid for time worked (statement of earnings, copy of payroll check or payroll register)?
- ☐ Has a time period summary sheet been included for total claimed amount?
- ☐ Has a general ledger payroll report been included for total claimed amount? Ensure this report includes both employee and employer payroll information (i.e., benefits/contributions).
- ☐ Does the back-up documentation include a copy of the check stub per employee for the time period covered?
- ☐ Does the back-up documentation provided match the time period for which reimbursement is being requested?

OTHER:

- ☐ If EHP form needed – has copy of it and approval from USDHS/FEMA been included?

MATCHING FUNDS (IF APPLICABLE)

- ☐ Contributions are from Non-Federal funding sources.
- ☐ Contributions are from cash or in-kind contributions which may include training investments.
- ☐ Contributions are not from salary, overtime, or other operational costs unrelated to training.

This page is intentionally left blank.

ATTACHMENT 3
Glossary and Definitions

Applicant: When an entity applies for PA funding, it is the **Applicant**. Once the Applicant receives funding, it is either the **recipient, pass-through entity,** or a **sub-recipient**.

Authorized Equipment List (AEL): The Authorized Equipment List (AEL) is a list of approved equipment types allowed under FEMA's preparedness grant programs.

Backfill: The act of filling a position left by another employee who has been moved to another role.

Cost Match: Recipient or sub-recipient contribution. This can be cash (hard match) or third party in-kind (soft match). 2 C.F.R. 200.306.

Cost Sharing or Matching: The portion of project costs not paid by federal funds or contributions (unless otherwise authorized by federal statute). 2 C.F.R. 200.1 Cost sharing or matching.

Declared fire: An uncontrolled fire or fire complex, threatening such destruction as would constitute a major disaster, which the FEMA Regional Administrator has approved in response to a state's request for a fire management assistance declaration and in accordance with the criteria listed in 44 C.F.R. 204.21. Fire Management Assistance Declaration Criteria.

Disallowed costs: Those charges to a federal award that the federal awarding agency or pass-through entity determines to be unallowable, in accordance with the applicable federal statutes, regulations, or the terms and conditions of the federal award. 2 C.F.R. 200.1 Disallowed costs.

Demobilization: The process and procedures for deactivating, disassembling, and transporting back to their point of origin all resources that had been provided to respond to and support a declared fire.

Disaster: An emergency condition affecting all or part the state, overwhelming local resources, in which there is likely to be a significant recovery period. The Governor may request a Robert T. Stafford Act (Stafford Act) Disaster Declaration through FEMA, asking for the Public Assistance Program, Fire Management Assistance Program, Individual Assistance Program and Mitigation based upon known and estimated damage assessment data.

Disaster Recovery Reform Act of 2018 (DRRA): The DRRA represents the most comprehensive Emergency Management reform since the Post-Katrina Emergency Management Reform Act in 2006. It includes a larger and more reliable funding stream for pre-disaster mitigation, expanded assistance for individuals and households, and support for states, localities, tribes, and territories (SLTTs) to develop their own emergency management capabilities.

Emergency: A condition in which local and state emergency response agencies are overwhelmed by an incident to the point that federal assistance is needed. Unlike a disaster, an emergency does not have a recovery phase. The Governor may request a Stafford Act Emergency Declaration through FEMA, asking for the Public Assistance Program and/or Fire Management Assistance Grant.

Emergency Work: Work which must be done before, during and immediately after a disaster event to save lives and to protect improved property and public health and safety or to avert or lessen the threat of a major disaster. The FEMA Public Assistance emergency work Categories are:

- Category A (Debris Removal)
- Category B (Emergency Protective Measures)

Equipment: Tangible personal property (including information technology systems) having a useful life of more than one year and a per-unit acquisition cost which equals or exceeds the lesser of the capitalization level established by the non-federal entity for financial statement purposes, or $5,000. 2 C.F.R. 200.1 Equipment.

*Expenditures***:** Charges made by a non-federal entity to a project or program for which a federal award was received. 2 C.F.R. 200.1 Expenditures.

Federal Award: The federal financial assistance that a recipient receives directly from a federal awarding agency or indirectly from a pass-through entity. 2 C.F.R. 200.1 Federal award.

Federal Emergency Management Agency (FEMA): The federal agency responsible for coordinating disaster recovery efforts in partnership with state, local, and tribal governments.

Federal Share: The portion of the federal award costs that are paid using federal funds. 2 C.F.R. 200.1 Federal share.

FEMA/State Agreement: A formal, legal document between FEMA and the state or a tribal government giving the understandings, commitments, terms, conditions, and timelines for assistance resulting from a federal disaster, emergency, or fire declaration, declared by the President.

Governor's Authorized Representative (GAR): The person designated by the Governor to execute all necessary documents for disaster assistance programs on behalf of the state and local grant recipients. The GAR is responsible for state compliance with the FEMA/State Agreement. The GAR may also be designated as the State Coordinating Officer.

Hazard Mitigation: Mitigation is the effort to reduce loss of life and property by lessening the impact of disasters.

Hazard Mitigation (Sections 404 and 406): Section 406 Mitigation measures are specific to the mechanism of the declared disaster and are an integral part of the reconstructed work on a facility or will protect or benefit the repaired portion of the facility. These are different from mitigation measures that are considered for eligibility under the Hazard Mitigation Grant Program (HMGP) of Section 404 of the Stafford Act. In the HMGP program, measures are proposed that may involve facilities other than those damaged by the disaster, new facilities, or even non-structural measures such as the development of floodplain management regulations.

Incident Period: The time interval during which the declared disaster occurs. The Regional Administrator, in consultation with the Governor's Authorized Representative and the Principal Advisor will establish the incident period. Generally, costs must be incurred during the incident period to be considered eligible.

The declaration designates the incident period. The incident period is the span of time during which the federally declared incident occurs. This period varies in length, depending on the incident.

Improved Project: When performing restoration work on a damaged facility, a sub-recipient may use the opportunity to make improvements to the facility. Projects that incorporate such improvements are improved projects. The improved facility must have the same function and at least the equivalent capacity as that of the pre-disaster facility. Federal funding for improved projects is limited to the lesser of the following: the federal share of the approved estimated costs to restore the damaged facility to its pre-disaster design and function or the federal share of the actual cost of completing the improved project. The sub-recipient must obtain FEMA approval, via the NMDHSEM, for an improved project prior to

construction.

Indirect Costs: Costs a recipient or sub-recipient incurs for a common or joint purpose benefitting more than one cost objective that are not readily assignable to the cost objectives specifically benefited.

Joint Field Office (JFO): A temporary facility established in or near a declared disaster area to serve as the field headquarters for FEMA, other federal and state recovery personnel, and serve as the focal point for federal disaster operations, direction, coordination, and information.

Large Project: An approved project estimated to cost the same as or more than the large project threshold amount. The large project threshold is a dollar amount adjusted annually to reflect changes in the Consumer Price Index for all urban consumers. The large project threshold amount, applicable to all projects, is the amount in effect on the declaration date of the disaster, regardless of when project approval is made or when the work is performed.

Management Costs: Management costs are any indirect costs, any direct administrative costs, and any other administrative expenses associated with the administration of HMA awards and subawards. Management costs are provided under HMGP, HMGP Post Fire, BRIC and FMA. For the Hazard Mitigation Grant Program (HMGP) and Hazard Mitigation Grant Program Post Fire (HMGP Post Fire), recipients will be reimbursed no more than 15% of the total amount of the award, of which not more than 10% may be used by the recipient and 5% by the subrecipient. Under HMGP and HMGP Post Fire, recipients' Administrative Plans must include procedures for monitoring and reporting on subrecipient management costs before receiving funding for management costs. For Building Resilient Infrastructure and Communities (BRIC) and Flood Mitigation Assistance (FMA), recipients may apply for a maximum of 10% of the total funds requested in their application cost estimate (federal and non-federal shares) for management costs to support the sub-applications included as part of their award. Subapplicants for BRIC and FMA may apply for a maximum of 5% of the total funds requested in a sub-application for management costs. Additional information is available in FEMA Policy #104-11-1, Hazard Mitigation Grant Program Management Costs (Interim).

Pass-through Entity: A non-federal entity that provides a subaward to a sub-recipient to carry out part of a federal program. 2 C.F.R. 200.1 Pass through entity (PTE).

Performance Period for Hazard Mitigation Assistance: The period of time stipulated in the Sub-recipient Grant Agreement, as amended, during which the sub-recipient must finish the approved work. Projects completed after the active Period of Performance deadline will be considered ineligible.

Quarterly Financial Progress Report: The information in this report is used by NMDHSEM to monitor sub-recipient cash flow, performance, and project implementation to ensure proper use of federal funds.

Recipient: Formally referred to as the grantee or sub-grantee or applicant. Federally Recognized Indian Tribal Governments may also be Recipients if they so desire and if they meet FEMA requirements.

Recovery Officer: Aids in the administration of disaster recovery grant programs for statewide disasters and emergencies. Coordinates and co-administers disaster recovery grant programs, ensuring that they are implemented and carried out according to state and federal program requirements.

Recovery Unit: This is the unit within the NMDHSEM Response and Recovery Bureau designated as responsible for the programmatic administration of the FEMA PA and FMAG Programs.

Recovery Unit Manager: Responsible for administering and supervising staff responsible for federal and state disaster recovery programs and serves as the Deputy State Coordinating Officer (SCO) for

emergencies or major disaster declarations.

Response & Recovery Bureau Chief: Responsible for supervising staff responsible for federal and state disaster recovery programs and staff that provides operational response capabilities to support the citizens of New Mexico. This position also serves as State Coordinating Officer (SCO) for emergencies or major disaster declarations.

Request for Approval Form: Used by sub-recipient to request approval from NMDHSEM to expend funds for previously identified and approved projects. Approval must be received prior to expenditure.

Small Project: An approved project estimated to cost less than the large project threshold amount.

State Coordinating Officer (SCO): The person designated by the Governor to coordinate state and local disaster assistance efforts with those of the federal government. The GAR may also be the SCO. The Governor will name the GAR and the SCO in the FEMA/State Agreement.

Sub-recipient: Formally referred to as the sub-grantee or applicant, is a state agency, local government, tribal government, other legal governmental entity, or a private non-profit (PNP) organization that receives a sub-grant award and which is accountable to the state for the use of the funds provided. The FEMA reserves the final decision as to sub-recipient eligibility.

Supplanting: When a state or unit of local government reduces state or local funds for an activity specifically because federal funds are available (or expected to be available) to fund that same activity. When supplanting is not permitted, federal funds must be used to **supplement** existing state or local funds for program activities and may not replace state or local funds that have been appropriated or allocated for the same purpose. Additionally, federal funding may not replace state or local funding that is required by law. If a question of supplanting arises, the sub-recipient or grantee will be required to substantiate that the reduction in non-federal resources occurred for reasons other than the receipt or expected receipt of federal funds. US Department of Justice Office of Justice Programs, Grants 101.

The remainder of this page is intentionally left blank.

ATTACHMENT 4
Acronyms

AEL: Authorized Equipment List
AGAR: Alternate Governor's Authorized Representative
ASB: Administrative Services Bureau of NMDHSEM
CFDA: Catalog of Federal Domestic Assistance
DAC: Direct Administrative Costs
DOT: Department of Transportation
DPS: Department of Public Safety
DRRA: Disaster Recovery Refo1m Act of 2018
DSCO: Deputy State Coordinating Officer
DSIBD: Deputy State Infrastructure Branch Director
DSPAGS: Deputy State Public Assistance Group Supervisor
EMAC: Emergency Management Assistance Compact
EMMIE: Emergency Management Mission Integrated Environment
EMNRD: Energy, Minerals and Natural Resources Department
FEMA: Federal Emergency Management Agency
FFATA- Federal Funding Accountability and Transparency Act
FMAG - Fire Management Assistance Grant
GAR: Governor's Authorized Representative
IMAS: Intrastate Mutual Aid System
INF: Immediate Needs Funding
IOF: Initial Operating Facility
JFO: Joint Field Office
NSPO: Net Small Project Overrun
NMDHSEM: New Mexico Department of Homeland Security and Emergency Management
ONA: Other Needs Assistance
OMB: Office of Management and Budget
PA: Public Assistance
PAGS: Public Assistance Group Supervisor
PAPPG: Public Assistance Program and Policy Guide
PDA: Preliminary Damage Assessment
PDMG: Program Delivery Manager
PIO: Public Information Officer
PNP: Private Non-Profit
POP: Period of Performance
PW: Project Worksheet
R&R: Response & Recovery Bureau
REC: Record of Environmental Consideration
RO: Recovery Officer
RP A - Request for Public Assistance
SCO: State Coordinating Officer
SOW: Scope of Work
SHARE: New Mexico Statewide Human Resources, Accounting, and Management Reporting System

SIBD: State Infrastructure Branch Director
SPAGS: State Public Assistance Group Supervisor
SPAO: State Public Assistance Officer
USDHS: United States Department of Homeland Security
USFS: US Forest Service
VFO: Virtual Field Office

The remainder of this page is intentionally left blank.

City of Santa Fe New Mexico

Finance Department

Project Ledger Request Form

Date of Request: 09/06/24

Project Title: Ashbaugh Park Stormwater Infiltration Project

Project Type: ☑ CIP ☑ Grant ☐ Internal Tracking

Project ID: OEM2523103
Grant ID: F2513
Approved By: E.LUJAN 9/27/2024
Entered By: PL/CT (Finance Use Only)

Department: Public Works/OEM Project Manager: Zoe Isaacson/Kyle Morgan Ext: 629-2539

Project Date Range: 02/15/2024 to 02/14/2027 ☐ Create Fixed Asset

---

☑ Multi-Funding (complete all funding sources, should equal 100%)

Funding Source: Dept of Homeland Security/FEMA % of Funding: 75% - $540,263.60

MUNIS ORG: 2310411/2212850 MUNIS OBJ: 490580 Awarded Amount: $506,577/$33,687

Funding Source: Stormwater Utility Fee (Fund 231) % of Funding: 25%

MUNIS ORG: N/A MUNIS OBJ: N/A Awarded Amount: 168,858.87

Expense String Phase:

A project must have at least one phase identified, this can be used as an additional level of tracking, for example, CIP - Design, Construction, etc. For Grants can be used as reimbursable types, such as transportation, salaries.

(You can create more than one phase and you can default MUNIS ORGs and OBJs, optional)

Phase: Design MUNIS ORG: 2310411 MUNIS OBJ: 572960

Phase: Professional Contracts MUNIS ORG: 2212850 MUNIS OBJ: 510300

Phase: MUNIS ORG: MUNIS OBJ:

Contract number: Comments/Other:

GRANTS ONLY:

Grantor Name: NMDHSEM-P/T EMT2022-BR-002 Awarded Amount: 540,263.60

AR Charge Code: 2310411/2212850-490580 ☐ Grant funds multiple projects (Complete a form for each project)

Grantor Id: 700034 Federal CFDA (if applicable): 97.047

(If grants please provide all grant award documents with form) ☑ Attached Grant Documentation

2022_BRIC_SGA_Stormwater

Final Audit Report 2024-10-02

Created:	2024-10-01
By:	JULIE KENNY (jckenny@santafenm.gov)
Status:	Signed
Transaction ID:	CBJCHBCAABAAOXnMZJgFIHoQ0NQyWEge3pZwuP0ceQV8

"2022_BRIC_SGA_Stormwater" History

Document created by JULIE KENNY (jckenny@santafenm.gov)
2024-10-01 - 11:53:31 PM GMT- IP address: 63.232.20.2

Document emailed to Rebecca Mnuk-Herrmann (ramnukherrmann@santafenm.gov) for signature
2024-10-01 - 11:54:16 PM GMT

Email viewed by Rebecca Mnuk-Herrmann (ramnukherrmann@santafenm.gov)
2024-10-02 - 1:31:55 AM GMT- IP address: 73.228.44.222

Document e-signed by Rebecca Mnuk-Herrmann (ramnukherrmann@santafenm.gov)
Signature Date: 2024-10-02 - 1:32:31 AM GMT - Time Source: server- IP address: 73.228.44.222

Agreement completed.
2024-10-02 - 1:32:31 AM GMT

Powered by Adobe Acrobat Sign

BRIC_2022_Stormwater_Council_Packet_2024-10-21

Final Audit Report 2024-11-01

Created:	2024-10-30
By:	Justin Gonzales (jmgonzales@santafenm.gov)
Status:	Signed
Transaction ID:	CBJCHBCAABAA5yePzQ2dVA9dubnDj89TMAnHBCoWau3U

"BRIC_2022_Stormwater_Council_Packet_2024-10-21" History

Document created by Justin Gonzales (jmgonzales@santafenm.gov)
2024-10-30 - 4:23:41 PM GMT- IP address: 63.232.20.2

Document emailed to BRIAN WILLIAMS (bgwilliams@santafenm.gov) for signature
2024-10-30 - 4:30:32 PM GMT

Email viewed by BRIAN WILLIAMS (bgwilliams@santafenm.gov)
2024-10-30 - 5:02:29 PM GMT- IP address: 104.47.65.254

Document e-signed by BRIAN WILLIAMS (bgwilliams@santafenm.gov)
Signature Date: 2024-10-30 - 5:03:22 PM GMT - Time Source: server- IP address: 63.232.20.2

Document emailed to rawheeler@santafenm.gov for signature
2024-10-30 - 5:03:26 PM GMT

Email viewed by rawheeler@santafenm.gov
2024-10-31 - 5:08:29 PM GMT- IP address: 104.47.65.254

Signer rawheeler@santafenm.gov entered name at signing as RW
2024-10-31 - 5:08:44 PM GMT- IP address: 63.232.20.2

Document e-signed by RW (rawheeler@santafenm.gov)
Signature Date: 2024-10-31 - 5:08:46 PM GMT - Time Source: server- IP address: 63.232.20.2

Document emailed to HENRI HAMMOND-PAUL (hmhammondpaul@santafenm.gov) for signature
2024-10-31 - 5:08:48 PM GMT

Email viewed by HENRI HAMMOND-PAUL (hmhammondpaul@santafenm.gov)
2024-10-31 - 5:26:22 PM GMT- IP address: 104.47.64.254

Powered by Adobe Acrobat Sign

Document e-signed by HENRI HAMMOND-PAUL (hmhammondpaul@santafenm.gov)
Signature Date: 2024-10-31 - 5:26:33 PM GMT - Time Source: server- IP address: 63.232.20.2

Document emailed to mtbonifer@santafenm.gov for signature
2024-10-31 - 5:26:35 PM GMT

Email viewed by mtbonifer@santafenm.gov
2024-10-31 - 9:47:25 PM GMT- IP address: 104.47.65.254

Signer mtbonifer@santafenm.gov entered name at signing as Matthew Bonifer
2024-10-31 - 9:47:59 PM GMT- IP address: 63.232.20.2

Document e-signed by Matthew Bonifer (mtbonifer@santafenm.gov)
Signature Date: 2024-10-31 - 9:48:01 PM GMT - Time Source: server- IP address: 63.232.20.2

Document emailed to ajhopkins@santafenm.gov ajhopkins@santafenm.gov (ajhopkins@santafenm.gov) for signature
2024-10-31 - 9:48:03 PM GMT

Email viewed by ajhopkins@santafenm.gov ajhopkins@santafenm.gov (ajhopkins@santafenm.gov)
2024-10-31 - 11:24:04 PM GMT- IP address: 104.47.65.254

Document e-signed by ajhopkins@santafenm.gov ajhopkins@santafenm.gov (ajhopkins@santafenm.gov)
Signature Date: 2024-10-31 - 11:25:16 PM GMT - Time Source: server- IP address: 63.232.20.2

Document emailed to EMILY OSTER (ekoster@santafenm.gov) for signature
2024-10-31 - 11:25:18 PM GMT

Email viewed by EMILY OSTER (ekoster@santafenm.gov)
2024-11-01 - 5:40:44 PM GMT- IP address: 104.47.64.254

Document e-signed by EMILY OSTER (ekoster@santafenm.gov)
Signature Date: 2024-11-01 - 5:46:15 PM GMT - Time Source: server- IP address: 63.232.20.2

Agreement completed.
2024-11-01 - 5:46:15 PM GMT

City of Santa Fe, New Mexico
Memorandum

Date: **October 23, 2024**

To: **Governing Body**

Via: Regina Wheeler
Regina Wheeler (Oct 22, 2024 08:51 MDT)
Regina Wheeler, Public Works Director

From: **Jeanne Wolfenbarger, PE Public Works Complete Streets Engineer** Jeanne Wolfenbarger

ACTION
Approval of a Budget Amendment Resolution (BAR) to Reappropriate Unspent FY 24 Budget in the Amount of $175,000 to Engage a Consultant to Compile the Public Infrastructure Development Standards for Chapter 14 Code Revisions. (Jeanne Wolfenbarger, P.E., Public Works Complete Streets Engineer, jawolfenbarger@santafenm.gov)

BACKGROUND & SUMMARY:
On December 13, 2023, the Governing Body approved an FY24 Budget Amendment Resolution (BAR) from FY23 Gross Receipts Tax Revenue for this same effort and amount. In September 2024, staff was notified that the funding would be not carried forwarding into FY25, and therefore seeking reauthorization.

The Public Infrastructure Development Standards will include design related to roads and roadway drainage, stormwater, pedestrian and bicycle facilities, and parks. This work is being undertaken in coordination with Land Use's revision of Chapter 14 Code. These design standards will reflect Santa Fe values identified in plans, programs and policies including Complete Street resolutions, MPO Master Plans and the City of Santa Fe Multimodal Transition Plan.

Funding Source: FY 24 Budget Allocation of FY 23 GRT Revenue earned over budgeted estimates

Project Ledger ID/Name: PWD241000A – PW / Land Use Development Code
Fund Name/Number: General Fund/ 100
Org Name/Number: Public Works Admin / 1006001
Object Name/Number: Professional Contracts / 510300

Attachments:
BAR
Munis Detail of Unspent FY 24 Budget

Log # *{Finance use only}*:	
Journal # *{Finance use only}*:	

City of Santa Fe, New Mexico
BUDGET AMENDMENT RESOLUTION (BAR)

DEPARTMENT / DIVISION NAME	DATE
Public Works / Public Works Admin	10/21/2024

ITEM DESCRIPTION	ORG	OBJECT	PROJECT	INCREASE	DECREASE
EXPENDITURES				*{enter as positive #}*	*{enter as negative #}*
Professional Contracts - LU Code Revisions	1006001	510300	PWD241000A	175,000	
REVENUES				*{enter as negative #}*	*{enter as positive #}*
				$ 175,000	$ -

JUSTIFICATION: *(use additional page if needed)*
--Attach supporting documentation/memo

Reappropriate FY 24 unspent budget for City Code Chapter 14 Land Development Code revisions within the Public Works Department to FY 25.

{Complete section below if BAR results in a net change to ANY Fund}

Fund(s) Affected	Fund Balance Increase/(Decrease)
100	(175,000)
TOTAL:	(175,000)

Halona Crowe — Prepared By *{print name}* — 10/21/2024 Date

{Use this form for Finance Committee/ City Council agenda items ONLY}

Andy Hopkins — Budget Officer — Date

CITY COUNCIL APPROVAL

City Council Approval Date

Agenda Item #:

Division Director Signature *{optional}* — Date

Regina Wheeler
Regina Wheeler (Oct 21, 2024 15:19 MDT)

Department Director Signature — Date

Finance Director *{≤ $5,000}* — Date

City Manager *{≤ $60,000}* — Date

Account Inquiry [CITY OF SANTA FE]

Account

Fund	100	GENFUND
Org	1006001	PW Admin
Object	510300	Prfsl Cntr
Project		

4 Year Comparison | Current Year

Yr/Per 2024/13	Fiscal Year 2024
Original Budget	.00
Transfers In	351,406.00
Transfers Out	-45,500.00
Revised Budget	305,906.00
Actual (Memo)	34,698.23
Encumbrances	40,359.28
Requisitions	.00
Available	230,848.49
Percent used	24.54

Project string

Project *	PWD241000A	CH 14 LAND USE DEVELOPMENT CODE
Phase *	ContrSvc	Contractual Services
Task *		
Sub-Task *		

Name *	CH 14 LAND USE DEVELOPMENT COD		
Short Name *	CH 14 LAND		
Status	Active		
Projected date range	11/13/2023	to	11/13/2024
Actual date range		to	

Project String Balances | GL Accounts

	Project Year 2024	Project Year 2023
Original Budget	.00	.00
Transfers - In	199,000.00	.00
Transfers - Out	.00	.00
Revised Budget	199,000.00	.00
Actual (Memo)	3,241.57	.00
Encumbrances	17,909.10	.00
SOY Encumbrances	.00	.00
Requisitions	.00	.00
Inception to SOY	.00	.00
Available	177,849.33	.00
Percent Used	10.63	0.00

City of Santa Fe, New Mexico
Memorandum

Date: **November 14, 2023**

To: **Governing Body**

Via: Regina Wheeler
Regina Wheeler (Dec 1, 2023 09:17 MST)

Regina Wheeler, Public Works Director

Emily K. Oster
Emily K. Oster (Dec 1, 2023 11:09 MST)

Emily Oster, Finance Director

From: **Jeanne Wolfenbarger, PE Public Works Complete Streets Engineer** Jeanne Wolfenbarger
Erick Aune, MPO Officer Erick Aune
Erick Aune (Dec 1, 2023 09:08 MST)

ACTION
Approval of a Budget Amendment Resolution (BAR) from FY23 Gross Receipts Tax Revenue Earned Over Budgeted Estimates in the Amount of $175,000 to Engage a Consultant to Compile Public Works elements for the City Code Chapter 14 Land Development Code Revision.

BACKGROUND & SUMMARY:
The Chapter 14 Land Development Code Revision project is underway. The elements of this code that relate to rights of way, stormwater, pedestrian and bicycle facilities, parks and street lighting require updating so that public infrastructure built by private developers meets the City's goals. This work will be undertaken by Public Works and MPO in coordination with Land Use.

The street design standards will be updated to reflect Santa Fe values identified in plans, programs and policies including Complete Street resolutions, MPO Master Plans and the City of Santa Fe Multimodal Transition Plan. The City has relied on NMDOT standards and national standards which can result in roads designed which are prioritized for the movement of vehicles limiting options for pedestrians, bicyclists and transit riders.

Funding Source: FY 23 GRT Revenue earned over budgeted estimates

Funding destination
Project Ledger ID/Name: PWD241000A – PW / Land Use Development Code
Fund Name/Number: General Fund/ 100
Org Name/Number: Public Works Admin / 1006001
Object Name/Number: Professional Contracts / 510300

Attachments:
BAR

Log # {Finance use only}:	BA002666
Journal # {Finance use only}:	pd 6 JE 1144

City of Santa Fe, New Mexico
BUDGET AMENDMENT RESOLUTION (BAR)

DEPARTMENT / DIVISION NAME	DATE
Public Works / Public Works Admin	11/13/2023

ITEM DESCRIPTION	ORG	OBJECT	PROJECT	INCREASE	DECREASE
EXPENDITURES				{enter as positive #}	{enter as negative #}
Professional Contracts - LU Code Revisions	1006001	510300	PWD241000A	175,000	
REVENUES				{enter as negative #}	{enter as positive #}
				$ 175,000	$ -

JUSTIFICATION: *(use additional page if needed)*
–Attach supporting documentation/memo

Use of prior year Gross Receipts Tax revenue earned over budgeted estimates to enact City Code Chapter 14 Land Development Code revisions within the Public Works Department.

{Complete section below if BAR results in a net change to ANY Fund}

Fund(s) Affected	Fund Balance Increase/(Decrease)
100	(175,000)
TOTAL:	(175,000)

Halona Crowe — Prepared By {print name} — 11/13/2023 Date

Division Director Signature {optional} — Date

Regina Wheeler (Dec 1, 2023 09:17 MST)
Department Director Signature — Date

{Use this form for Finance Committee/ City Council agenda items ONLY}

CITY COUNCIL APPROVAL

City Council Approval Date: 12/13/23

Agenda Item #: 9-aa

Alexis Lotero (Dec 1, 2023 10:59 MST)
Budget Officer — Date

Finance Director {≤ $5,000} — Date

City Manager {≤ $60,000} — Date

CITY OF SANTA FE

Date: October 30, 2024

To: Governing Body

Via: Regina Wheeler, Public Works Director RW (Oct 30, 2024 11:03 MDT)
Henri Hammond-Paul, Community Health and Safety Director HENRI HAMMOND-PAUL (Oct 31, 2024 09:35 MDT)

From: **Brian Williams, Office of Emergency Management Director** BRIAN WILLIAMS (Oct 30, 2024 11:02 MDT)

Subject: **Hazard Mitigation Grant Program (HMGP) Grant Approval – Arroyo De Los Pinos Bio-Infiltration Basins Design**

ITEM AND ISSUE:
Request Approval of the 2023 Hazardous Mitigation Grant Program (HMGP) Sub-Grant Agreement DR-5430-0012-NM in the total amount of $364,820.91 with the New Mexico Department of Homeland Security and Emergency Management for Bio-Infiltration Basin Design at Marc Brandt Park. Brian Williams, Director Office of Emergency Management, bgwilliams@santafenm.gov.

Request Approval of a New Mexico Match Fund Grant 24-ZI5044-MG25-085 in the total amount of $87,740.41 with the New Mexico Department of Finance and Administration for Federal Grant Match Funding. Brian Williams, Director Office of Emergency Management, bgwilliams@santafenm.gov.

Request Approval of a FY25 BAR to Budget $350,961.66 in Awarded Federal Grant Funds to Stormwater WIP Design, $13,859.25 in Awarded Federal Grant Funds for Subrecipient Management Costs into Emergency Management Professional Contracts, and $87,740.41 in Awarded State Grant Funds to Stormwater WIP Design.

Action Requested: Grant Approval (2), BAR Approval

BACKGROUND AND SUMMARY:
The City of Santa Fe applied for this reimbursable grant through the United States Department of Homeland Security and Emergency Management (DHSEM) and the Federal Emergency Management Agency (FEMA). The Hazard Mitigation Grant Program (HMGP) supports states, local communities, tribes and territories as they undertake hazard mitigation projects, reducing the risks they face from disasters and natural hazards.

The Office of Emergency Management and the Parks and Open Space Division collaborated to secure this grant for conducting an engineering drainage analysis, green stormwater infrastructure and landscape design for bio-infiltration basins along the Siringo Rd corridor at Marc Brandt Park. The infiltration basins will provide infiltration, passive reuse and water conservation resulting in flood mitigation and a high-quality public open space for low-income communities. In addition, these basins will provide a "first flush" primary treatment of stormwater and decrease pollutant loads at the point of discharge into the Arroyo de Los Pinos.

The Office of Emergency Management applied for matching funds to cover the local share through the New Mexico Department of Finance and Administration (DFA) after receiving the federal grant award.

This Hazard Mitigation Grant Program grant provides a 75% federal share of $350,960.66 and requires a 25% local share of $87,740.41 which will be provided through the New Mexico Match Fund.

The HGMP grant amount also includes a 100% federally funded Subrecipient Management Costs $13,859.25 to assist with capacity in managing the grant.

The Office of Emergency Management will manage these grants, while the Parks and Open Space Division will manage the project.

The term of the grant ends on January 25, 2027.

PROCUREMENT METHOD:
Not applicable. Grant approval only.

Supporting Information:

CONTRACT NUMBER:
The FY25 Project ledger number is OEM2523102

SOURCE/REVENUE: ☐Expense ☒Revenue

The Federal funding source (not including sub-recipient management costs) is:
Fund Name/Number: Stormwater/Fund 231
Munis Org Name/Number: Stormwater/2310411
Munis Object Name/Number: Fed Grant (FEMA)/490580

The Federal funding source (sub-recipient management costs only) is:
Fund Name/Number: Emergency Services/Fund 221
Munis Org Name/Number: Emergency Management/2212850
Munis Object Name/Number: Fed Grant (FEMA)/490580

The Local funding source is:
Fund Name/Number: Stormwater/Fund 231
Munis Org Name/Number: Stormwater/2310411
Munis Object Name/Number: State Grant (DFA)/490210

List grant award number*: DR-540-0012-NM (Federal) / 24-ZI5044- MG25-085 (State)*

Grant Manager / Accounting Officer Approval: Matthew Bonifer Matthew Bonifer (Oct 31, 2024 10:34 MDT) **Date:** 10/31/2024
Comment/Exceptions: _____

Project Ledger #: OEM2523102

Budget Officer Approval: Andy Hopkins **Date:** 10/31/2024
Comment/Exceptions: _____

CAPITAL ASSET (will this procurement result in a tangible item that costs more than $5,000?):

☐Yes | ☒ No

 # (if known): _____

Repair or Replacement of Existing Equipment:

☐Yes | ☒ No
If yes -> ☐Repair | ☐ Replacement

Please explain: _____

Capital Project:
(New and improvement projects that are going to cost $10,000 or more)
☐ Yes | ☒ No

Project Ledger #: OEM2523102

Anticipated length of project: _____

Asset Manager Approval: _____ **Date:** _____
Comment/Exceptions: _____

Department Approvals:
IT Components: ☐ **Yes** | ☒ **No**
Vehicles: ☐ **Yes** | ☒ **No**
Facilities, Furniture, Fixtures, Equipment: ☐ **Yes** | ☒ **No**

Approval: _____ **Title:** _____ **Date**: _____
Approval: _____ **Title:** _____ **Date**: _____
Comment & Exceptions: _____

Department Contract Administrator Contact Info:
Justin Gonzales, jmgonzales@santafenm.gov.

ATTACHMENTS:

1. Budget Amendment Resolution
2. NM Match Fund Grant Agreement
3. Sub-Recipient Grant Agreement (Federal)
4. Project Ledger

Log # *{Finance use only}*:	
Journal # *{Finance use only}*:	

City of Santa Fe, New Mexico
BUDGET AMENDMENT RESOLUTION (BAR)

DEPARTMENT / DIVISION NAME	DATE
Public Works / Stormwater CIP	9/11/2024

ITEM DESCRIPTION	ORG	OBJECT	PROJECT	INCREASE	DECREASE
EXPENDITURES				*{enter as positive #}*	*{enter as negative #}*
WIP DESIGN - Arroyo de Los Pinos Bioinfiltration Basins	2310411	572960	OEM2523102-Design	350,963	
PROFESSIONAL CONTRACTS	2212850	510300	OEM2523102-ProfContracts	13,859	
REVENUES				*{enter as negative #}*	*{enter as positive #}*
FEMA - Arroyo de Los Pinos Bioinfiltration Basins	2310411	490580	OEM2523102	(263,222)	
DFA - Arroyo de Lost Pinos Bioinfiltration Basins	2310411	490210	OEM2523102	(87,741)	
Federal Emergency Management Agency (GRANT)	2212850	490580	OEM2523102	(13,859)	
				$ -	$ -

JUSTIFICATION: *(use additional page if needed)*
--Attach supporting documentation/memo

FY 25 budget increase for subrecipient grant award: DR-5430-0012-NM: FEMA Hazard Mitigation Grant for Arroyo de Los Pinos Bioinfiltration Basins at the Arroyo de Los Pinos in the amount of $263,222 for Design and $13,859 for Management Costs.

Expires 01/25/2027

FY 25 budget increase for Department of Finance and Administration State Matching Grant in the amount of $87,741 to cover 25% local match requirement of FEMA Grant (DR-5430-0012-NM). Expires 06/25/2027.

{Complete section below if BAR results in a net change to ANY Fund}

Fund(s) Affected	Fund Balance Increase/(Decrease)
TOTAL:	**0**

Kyle Morgan — 9/11/2024
Prepared By *{print name}* — Date

Division Director Signature *{optional}* — Date

HENRI HAMMOND-PAUL (Oct 31, 2024 09:35 MDT) 10/31/2024
Department Director Signature — Date

{Use this form for Finance Committee/ City Council agenda items ONLY}

CITY COUNCIL APPROVAL

City Council Approval Date:

Agenda Item #:

Andy Hopkins — 10/31/2024
Budget Officer — Date

Finance Director *{≤ $5,000}* — Date

City Manager *{≤ $60,000}* — Date

New Mexico
Department *of* Finance
and Administration

407 Galisteo St,
Santa Fe, NM 87501
(505) 827-4985

Governor Michelle Lujan Grisham
Cabinet Secretary Wayne Propst

Infrastructure Planning & Development Division
Wesley Billingsley, Division Director

RECIPIENT:

City of Santa Fe

APPROPRIATION NUMBER:	ALLOCATION AMOUNT:	REVERSION DATE:
24-ZI5044- MG25-085	$87,740.41	Six (6) months after the end date of the associated federal grant's period of performance.

ALLOCATION PURPOSE

$87,740.41 for costs to meet cost sharing requirements City of Santa Fe – Arroyo De Los Pinos Bio-Infiltration basins Advance Assistance. Funds unexpended by the date specified in the period of performance terms of your federal grant agreement, will be reverted to the State of New Mexico within 6 months of the federal grant closeout.

ALLOCATION DISBURSEMENT

100% of the allocated funds will be disbursed upon execution of the agreement. The Allocation Recipient agrees to submit Annual reports using Exhibit A, Match Fund Annual Report Form, providing updates on the status of the expenditures from this appropriation. The Recipient also understands and agrees to use the allocated funds in accordance with the New Mexico Match Fund Policy.

CERTIFICATION

I hereby certify that City of Santa Fe

1. Will only use the allocated funds to carry out and/or perform activities described in allocation language.
2. Will submit annual reporting through the Match Fund Annual Report link.
3. Will adhere to the Match Fund policy.
4. Will adhere to the provisions of Attachment A- Special Provisions

John Blair
John Blair (Nov 1, 2024 12:44 MDT)

City Manager, City of Santa Fe — Date: 11/01/2024

Emily K. Oster

Finance Director, City of Santa Fe — Date: 11/01/2024

PUBLICITY

Any Publicity regarding this agreement must not be released without prior written approval from the DFA. For purposes of this agreement, "Publicity" means notices, informational pamphlets, press releases, email response, research, reports, signs, and similar public notices prepared by or for the Subrecipient or jointly with others. The Recipient shall not issue, without consent of the DFA, any press release, or make any public announcement with respect to this agreement. In the performance of responsibilities under this agreement, the Recipient agrees to obtain approval of the DFA in advance with respect to all Public Relations, all communications with media, or all communications with any other member of the public with respect to this agreement, except to acknowledge that an agreement does exist. For purposes of this agreement, "Public Relations" includes community relations and means those activities dedicated to maintaining the image of the DFA or maintaining or promoting understanding and favorable relations with the community or public at large or any segment of the public. For violations of this provision, as determined solely by the DFA, the DFA reserves the right to terminate this agreement.

New Mexico
Department *of* Finance
and Administration

407 Galisteo St,
Santa Fe, NM 87501
(505) 827-4985

Governor Michelle Lujan Grisham
Cabinet Secretary Wayne Propst

Infrastructure Planning & Development Division
Wesley Billingsley, Division Director

APPROVAL

In accordance with the authority conferred on the Department of Finance & Administration by the statute appropriating these funds, I hereby approve this certification for MG25-085 in the amount of $87,740.41.

Wesley Billingsley
Director, Infrastructure Planning & Development Division

Date

New Mexico
Department *of* Finance
and Administration

407 Galisteo St,
Santa Fe, NM 87501
(505) 827-4985

Governor Michelle Lujan Grisham
Cabinet Secretary Wayne Propst

Infrastructure Planning & Development Division
Wesley Billingsley, Division Director

OPTIONAL ATTACHMENT A
SPECIAL CONDITIONS

The grant award requires grantees' accounting methods and procedures, including their internal control framework, to be scrutinized, so as to safeguard State appropriations and assets acquired with such appropriations. This Matching Grant Special Grant Condition(s) **Attachment A** is necessary pursuant to Executive Order 2013-006 (2.A.2.a-c, if applicable), due to the Grantees' material weaknesses, significant deficiencies, or findings that raised concerns as to the ability to expend grant funds in accordance with applicable law in the organization's FY23 audit. The Special Conditions identified below apply to the authorized agent, City of Santa Fe.

Procurement - All purchases or contracts the Grantee enters that shall use funding from the Department capital appropriations grant must be approved by the Department prior to the initiation of implementing purchasing documents. The Grantee shall receive such prior approval via official correspondence from the Department, which may be through letter or email. The Grantee shall submit the following to the Department in pursuit of prior approval: purchasing policies and procedures, CFO certification, documentation of management and program approval, policies and procedures governing purchasing and contracting, a copy of the current procurement and contracting policies, and documentation regarding informing staff responsible for purchasing and contracting on such policies and procedures.

Cash Management – policies and procedures on cash management of federal funds. Provide procedures used to draw and disburse federal funds. Provide procedures to reconcile draw amounts, deposits and disbursements; and to prepare federal cash reporting documents to ensure compliance with federal regulations.

The City of Santa was required to and has provided sufficient documentation regarding procurement and cash management as referenced in the City of Santa Fe's FY23 Audit file. Therefore, the criteria to enter into this agreement have been met.

_____ _____

Wesley Billingsley
Director, Infrastructure Planning & Development Division

Date

New Mexico
Department *of* Finance
and Administration

407 Galisteo St,
Santa Fe, NM 87501
(505) 827-4985

Governor Michelle Lujan Grisham
Cabinet Secretary Wayne Propst

Infrastructure Planning & Development Division
Wesley Billingsley, Division Director

Exhibit A

Appropriation Recipient: _____

Appropriation Number: _____

Use of Appropriation Funds	**Amount**
Personnel Expenses	$ 0.00
Contract Expenses	$ 0.00
Other Expenses	$ 0.00
Total Amount of Appropriation Funds Expended	$ 0.00

Narrative *Describe the outcomes, results, benefit, and or uses of the appropriation funds*

IN WITNESS WHEREOF, the City of Santa Fe has agreed to this Grant Award as of the date of the signature by the required approval authorities below.

ATTEST:

_____
GERALYN CARDENAS, INTERIM CITY CLERK

CITY ATTORNEY'S OFFICE:

Oct 14, 2024
_____
REBECCA MNUK-HERRMANN, ASSISTANT CITY ATTORNEY

Match Fund Grant Agreement MG25-85 with CoSF signature page

Final Audit Report 2024-10-14

Created:	2024-10-08
By:	Amy Cawthon (amcawthon@santafenm.gov)
Status:	Signed
Transaction ID:	CBJCHBCAABAAZGQblCr7sFpbEgtyiD4R0lUnGVLDNmWf

"Match Fund Grant Agreement MG25-85 with CoSF signature page" History

Document created by Amy Cawthon (amcawthon@santafenm.gov)
2024-10-08 - 5:30:23 PM GMT- IP address: 63.232.20.2

Document emailed to Rebecca Mnuk-Herrmann (ramnukherrmann@santafenm.gov) for signature
2024-10-08 - 5:30:55 PM GMT

Email viewed by Rebecca Mnuk-Herrmann (ramnukherrmann@santafenm.gov)
2024-10-14 - 9:59:52 PM GMT- IP address: 174.240.19.127

Document e-signed by Rebecca Mnuk-Herrmann (ramnukherrmann@santafenm.gov)
Signature Date: 2024-10-14 - 10:00:20 PM GMT - Time Source: server- IP address: 174.240.19.127

Agreement completed.
2024-10-14 - 10:00:20 PM GMT

Powered by Adobe Acrobat Sign

State of New Mexico
DEPARTMENT OF HOMELAND SECURITY & EMERGENCY MANAGEMENT
P.O. Box 27111
Santa Fe, NM 87502

SUB-RECIPIENT GRANT AGREEMENT
HAZARD MITIGATION GRANT PROGRAM

CFDA 97.039 : Hazard Mitigation Grant Program Post-Fire

1. SUB-GRANT NO.	2. SUB-RECIPIENT NAME	3. PROJECT NAME
DR-5430-0012-NM	City of Santa Fe	City of Santa Fe – Arroyo De Los Pinos Bio-Infiltration basins Advance Assistance

4. STATE DFA VENDOR NUMBER	5. EIN NUMBER	6. SAM UEI NUMBER	7. CAGE CODE
54360	85-6000168	QLN2YKMMJ8X6	4C987

8. SUB-RECIPIENT PHYSICAL ADDRESS	9. SUB-RECIPIENT REMIT ADDRESS
200 Lincoln Ave Santa Fe, NM 87501	-

10. DHSEM CONTACT NAME:	11. CONTACT DESK PHONE:	225-313-1774
Natalie West	CONTACT EMAIL ADDRESS:	DHSEM.mitigation@dhsem.nm.gov cc: natalie.west@dhsem.nm.gov

12a. PERFORMANCE PERIOD START DATE	07/26/2024	12b. PERFORMANCE PERIOD END DATE	01/25/2027

13. TOTAL AWARD AMOUNT:	$364,820.91

13a. FEDERAL SHARE	13b. LOCAL SHARE	13c. STATE SHARE
$277,080.50	$87,740.41	$0.00

	14a. NAME OF PROJECT AWARD	14b. FEDERAL SHARE	14c. NON-FEDERAL SHARE
1	Arroyo De Los Pinos Bio-Infiltration	$263,221.25	$87,740.41
2	Sub-Recipient Management Costs	$13,859.25	$
TOTAL AMOUNT OF PROJECT		$277,080.50	$87,740.41

WHEREAS The State of New Mexico will serve as the "pass-through entity" with respect to the State's role in providing sub-awards and administering grant assistance provided to sub-recipients and may, subject to a Memorandum of Agreement, directly support project development and administration.

WHEREAS funding has been obligated from the Federal Emergency Management Agency pursuant to a request by the applicant, The Sub-Recipient, City of Santa Fe.

NOW, THEREFORE, it is mutually understood and agreed between the recipient NMDHSEM, and **City of Santa Fe**, hereinafter referred to as "sub-recipient," as follows:

ARTICLE 1: REQUIREMENTS AND ASSURANCES

A. The sub-recipient hereby agrees that the performance period for the grant identified on Page 1, Box 1. is consistent with the performance period identified on Page 1, Box 12a. and 12b. This Sub-recipient Grant Agreement, as amended, shall remain open for administrative purposes if necessary to achieve final payment and financial reconciliation.

B. The sub-recipient hereby agrees that the sub-recipient official signing this Sub-recipient Grant Agreement certifies that all financial expenditures, including all supporting documents submitted for reimbursement, have been incurred by the sub-recipient and are eligible and allowable expenditures consistent with the guidelines for this award. The sub-recipient agrees to follow reasonable professional standards in all financial management and bookkeeping procedures necessary to carry out this agreement.

C. The sub-recipient hereby agrees that no member, officer, or employee of the sub-recipient organization, or its designees or agents, no member of the governing body of the locality in which the program is situated, and no other public official of such locality or localities who exercises any functions or responsibilities with respect to the program during his or her tenure or for one year after that, shall have any interest, direct or indirect, in any contract or subcontract, or the process thereof, for work to be performed in connection with this Sub-recipient Grant Agreement; the sub-recipient shall incorporate in all such contracts a provision prohibiting such interest pursuant to the purposes of this Sub-recipient Grant Agreement.

D. The sub-recipient hereby agrees that it understands and agrees that it cannot use any federal funds, either directly or indirectly, in support of the enactment, repeal, modification, or adoption of any law, regulation, or policy, at any level of government, without the express written approval of the State of New Mexico or FEMA.

E. The sub-recipient hereby agrees that FEMA reserves a royalty-free, non-exclusive, and irrevocable license to reproduce, publish, or otherwise use and authorize others to use, for federal government purposes: (1) the copyright in any work developed under this Sub-recipient Grant Agreement; and (2) any rights of copyright to which the sub-recipient purchases ownership with federal support. The sub-recipient agrees to consult with FEMA through NMDHSEM regarding allocating any patent rights that arise from or are purchased with this funding.

F. The sub-recipient hereby agrees that signatures of the sub-recipient officials on this Sub-recipient Grant Agreement attest to the sub-recipient's understanding, acceptance, and compliance with Lobbying, Debarment, Suspension, and Other Responsibility Matters; Drug- free Workplace; Conflict of Interest, and Non-Supplanting certifications. Federal funds will not be used to supplant state or local funds. Federal funds will be used to supplement existing sub-recipient funding to augment program activities and not replace those funds which have been appropriated in the budget for the

same purpose.

G. The sub-recipient hereby agrees that their accounting system allows for the separation of fund sources. Funding provided under this Sub-recipient Grant Agreement cannot be commingled with funds from other federal, state, or local agencies, and each project must be accounted for separately.

H. The sub-recipient hereby agrees that it shall comply with applicable Federal Civil Rights Laws and Regulations: Title VI of the Civil Rights Act of 1964, Section 504 of the Rehabilitation Act of 1973, Title IX of the Education Amendments of 1972, Age Discrimination Act of 1975, and Americans with Disabilities Act of 1991. The sub-recipient will take reasonable steps to ensure Limited English Proficient (LEP) persons have meaningful access to its programs and activities. Executive Order 13379 Individuals with Disabilities in Emergency Preparedness, requires the government to support safety and security for individuals with disabilities in situations involving disasters, including earthquakes, tornadoes, fires, floods, hurricanes, and acts of terrorism.

I. The sub-recipient hereby certifies that for its employees, it has an Affirmative Action Plan/Equal Employment Opportunity Plan (EEOP) if not exempted by the Federal Government or New Mexico rule or statute. An EEOP is not required for sub-recipients of less than $25,000 or fewer than 50 employees.

J. The sub-recipient hereby certifies that its employees are eligible to work in the United States as verified by Form I–9, Immigration & Naturalization Service Employment Eligibility.

K. The sub-recipient hereby agrees that it is the responsibility of the sub-recipient to fully understand and comply with the requirements of the following, where such requirements apply to the sub-recipient set forth in:

1. 2 C.F.R. § 200: Code of Federal Regulations
2. 44 C.F.R. parts 7, 9, 10, 13, 14, 17, 18, 25, 206, 220, 221, 44 C.F.R. Part 209, 2 C.F.R. Part 200 and any other applicable FEMA policy memoranda and guidance documents
3. FEMA Hazard Mitigation Assistance Program and Policy Guide
4. New Mexico State Procurement Code
   New Mexico Administrative Code Title 2 – Public Finance https://www.srca.nm.gov/nmac-home/nmac-titles/title-2-public-finance/

ARTICLE 2: REIMBURSEMENT OF FUNDS

The NMDHSEM will apply the following procedures for making payments to sub-recipients:

A. Payment of Funds, General: Once FEMA has obligated funds and NMDHSEM has budgeted and encumbered those funds, the Cabinet Secretary is authorized to advance funds, as permissible, and to consider requests for payments for progress and completion based on proper review and approvals, in accordance with the sub-grant agreement or amendment as described below. Review and audit of expending and accounting of federal awards and state funds will be conducted to ensure records, reports, and documentation for compliance and tracing of funds are accounted for; 2 C.F.R. §§ 200.302(b)(6), 200.305(a). The State Department of Finance and Administration (DFA) may require additional supporting data and documents prior to disbursement of funds.

B. Reimbursement shall be based upon authorized and allowable expenditures consistent with the project narrative, grant guidelines, and timely submission of Financial and Performance Progress Reports. Reimbursement of expenditures shall be requested quarterly or monthly if need be for

expenditures within the performance period. A minimum of 25% (of the total project cost) in the non-federal match must be included on each request for reimbursement. All expenditures must be supported with source documentation (e.g., copies of proof of payment, invoices, receipts, timesheets with name/rate/hours and certified, breakdown of expenditures based on FEMA approved budget, warrants, a brief description of work done, required deliverables, etc.). Request for reimbursement will not be processed if quarterly financial or performance reports are delinquent. The final payment of 15% will not be made until DHSEM verifies that all activities are complete. All payments shall be made on an actual cost reimbursement basis.

C. Contracts: All requests for proposals/bids, sole–source procurements, single vendor responses to a competitive bid, and contracts require DHSEM pre–approval prior to implementation. The relevant contract must accompany requests for reimbursement for contractual services.

D. Local Match: Local matching funds must clearly support the source, the amount, and the timing of all matching contributions. When requesting reimbursement, the match percentage must be shown on each invoice. Copies of proof of payment, invoices, receipts, purchase orders, timesheets with name/wage/hours, cost allocation, general ledger, warrants, etc., must be submitted as a backup for the match.

E. Non-reimbursable Expenses:

- Transfer of funds between any programs. Contracts, single vendor response to a competitive bid, sole source contracts, and any procurement documentation not pre-approved by DHSEM.
- Training and related travel costs not pre-approved by DHSEM.
- Supplanting (using federal funds to purchase items previously budgeted for with state or local funds).
- Maintenance and/or wear and tear costs of general use vehicles and emergency response apparatus.
- Equipment purchased for an exercise cannot be used for permanent installation and/or beyond the scope of an exercise.
- Weapons and ammunition.
- Entertainment and sporting events
- Personal items such as laundry, personal hygiene items, magazines, in-room movies, personal travel, and personal phone calls.
- Travel insurance, visa, and passport charges.
- Lodging costs in excess of State per diem, as appropriate.
- Lunch when travel is wholly within a single day.
- Standalone working meals.
- Bar charges, alcoholic beverages.
- Finance, late fees, or interest charges.
- Lobbying, political contributions, and legislative liaison activities.
- Organized fundraising, including salaries of persons while engaged in these activities.
- Expenditures not supported with appropriate documentation when submitted for reimbursement. Only properly documented expenditures will be processed for payment. Unsupported expenditures will be returned to the jurisdiction for resubmission.

F. **Payment Conditions.** The sub-recipient must certify that in requesting and accepting a sub-grant payment, they have spent those funds on eligible expenditures; that the work performed was within the scope of work allowed for specific projects; and that all records pertinent to specific projects will be retained for at least the periods required under record retention regulation requirements from the closeout of the last project. The period of record retention for grant and financial data is three years if state funds are paid.

G. Delays and Denial of Payment. Reasons for delays in FEMA processing of payment requests include, but are not limited to, the following:

- Vendor identification number is missing or incorrect;
- Disaster and project number is missing;
- Period of performance (POP) listed is incorrect;
- Service delivery dates do not agree with invoices or outside of contract period;
- Dollar amount on forms do not agree;
- Mathematical errors;
- Full address of sub-grantee is not included;
- Sub-recipient did not provide required back-up documentation; or

Reasons for NMDHSEM declining payment requests include, but are not limited to, the following:

- The POP has expired;
- The amount exceeds the remaining funding available for disbursement prior to the final financial and program compliance reviews (the hold or funding retention amount);
- Request for payment requires a state and/or budget amendment, and cannot be processed until the amendment request is received/approved;
- The reimbursement requested is for an activity outside of the approved scope of work;
- Forms are not signed by an authorized person, or are signed by only one signatory;
- Reimbursement of awarded funds have been suspended due to a non-compliance issue such as failure to submit quarterly reports; or
- Reimbursements of awarded funds have been suspended due to noncompliance activities.

Sub-recipients can reduce the likelihood of delays in processing of payment requests by checking for accuracy prior to submission.

ARTICLE 3: AUDITING AND REPORTING REQUIREMENTS

A. Quarterly Reports. In accordance with 2 C.F.R. § 200.328, the Applicant shall submit quarterly reports to the NMDHSEM beginning with the first full quarter after the signature date on the Sub-recipient Grant Agreement. The NMDHSEM will provide sub-recipient a form for this report. Quarterly reports are due no later than the 15th of the month following the end of the quarter - January 15, April 15, July 15, and October 15.

In order that NMDHSEM may adequately evaluate the progress and status of each sub-grant, quarterly reports shall contain a description of the work accomplished to date, the methods and procedures used, the anticipated completion date, a summary of all project costs to date, and other such information as may be of assistance in its evaluation of the project.

Reports shall be sent to the Department of Homeland Security & Emergency Management, Recovery Unit, P.O. Box 27111, Santa Fe, NM 87502, or electronically to DHSEM.mitigation@dhsem.nm.gov.

B. Additional Reporting Requirements. The sub-recipient must immediately report in writing to the NMDHSEM Mitigation Unit any alleged acts or allegations of fraud or misappropriation of funds for work authorized under this Sub-recipient Grant Agreement. This extends to reporting any legal action, lawsuit, bankruptcy, or other action that may jeopardize the successful completion of any authorized project. Additional reporting and financial reconciliation requirements may also be requested at NMDHSEM and FEMA's request. Failure to comply with these requests may jeopardize funding and may be a breach of this Sub-recipient Grant Agreement.

C. Enforcement. The NMDHSEM may suspend drawdowns, impose other special conditions, or take other authorized action pursuant to 2 C.F.R. § 200.339 (Remedies for Noncompliance) if the sub-recipient does not submit accurate and timely reports. This may include, among other things, the administrative closeout of a grant and/or any projects under a grant when the sub-recipient is not responsive to reasonable efforts NMDHSEM makes to collect required reports needed to complete closeout. Administrative closeout is a unilateral mechanism by NMDHSEM to move forward with project or grant closeout using available grant information in lieu of final reports. This can require NMDHSEM to make cash or cost adjustments and ineligible cost determinations, which may result in identifying a debt owed to FEMA and/or NMDHSEM.

D. Financial Procedures. The sub-recipient agrees to maintain financial procedures and support documents and to establish and maintain a proper accounting system to record expenditures of disaster assistance funds in accordance with generally accepted accounting principles or as directed by the Governor's Authorized Representative, to account for the receipt and expenditure of funds under this Agreement. If applicable, RECIPIENT / SUBGRANTEE shall conduct audit(s) pursuant to the Single Audit Act of 1984, 31 U.S.C. § 7501 et. seq., 44 C.F.R. Part 14, 2 C.F.R. Part 200, 0MB Circular A-133, "Audits of States, Local Governments, and Non-profit Organizations," and applicable New Mexico laws, rules and regulations. Further, sub-recipient must provide a hard copy of the Single Audit Report within sixty (60) days of the close of its fiscal year. Otherwise, pursuant to 44 C.F.R. § 13.43, NMDHSEM may withhold or suspend payments under any grant award.

The sub-recipient shall retain all financial records, supporting documents, statistical records, and any other documents pertinent to this contract for a period of five years after the date of submission of the final expenditures report. However, if litigation or an audit has been initiated prior to the expiration of the three-year period, the records shall be retained until the litigation or audit findings have been resolved.

E. Authorizing Statute. This award is made under the provisions of the Robert T. Stafford Disaster Relief and Emergency Assistance Act, Pub. L. No. 93-288 (1974) (codified as amended at 42 U.S.C. §§ 5121-5207) (Stafford Act), in accordance with 44 C.F.R. § 206.44.
All scopes of work and costs approved as a result of this Sub-recipient Grant Agreement, whether as estimates or final costs approved through subawards, PWs, or otherwise, will incorporate by reference the terms of this Sub-recipient Grant Agreement and must comply with applicable laws, regulations, policy, and guidance in accordance with this Sub-recipient Grant Agreement.

Pursuant to Executive Order 13858 Strengthening Buy-American Preferences for Infrastructure Projects, FEMA encourages recipients to use, to the greatest extent practicable and consistent with the law, iron and aluminum as well as steel, cement, and other manufactured products produced in the United States in Public Assistance and HMGP eligible public infrastructure repair and construction projects affecting surface transportation, ports, water resources including sewer and drinking water, and power. Such preference must be consistent with the law, including cost and contracting requirements at 2 C.F.R. Part 200.

F. Additional Terms and Conditions. The following additional sub-grant agreement documents are fully incorporated into this Sub-recipient Grant Agreement and thereby constitute additional terms and conditions of this agreement.

- The Stafford Act, its implementing regulations contained in Title 44 of the C.F.R., and FEMA policy and guidance.
- **Hazard Mitigation Assistance Guide (March 2023)**
- The Uniform Administrative Requirements, Cost Principles, and Audit Requirements for Federal Awards set forth at 2 C.F.R. Parts 200 and 3002.

- Attachment 1 United States Department of Homeland Security (USDHS) Standard Terms and Conditions (January 24, 2022) in effect on the date of the Declaration which are incorporated by reference into this Sub-recipient Grant Agreement
- Attachment 2 Reimbursement Checklist
- Attachment 3 Glossary and Definitions
- Attachment 4 Acronyms

ARTICLE 4: SCOPE OF WORK

A. As authorized by the Robert T. Stafford Disaster Relief and Emergency Assistance Act (the Stafford Act), as amended (42 U.S.C. § 5121 et seq.), and Section 662 of the Post Katrina Emergency Reform Act of 2006, as amended (6 U.S.C. § 762), the **City of Santa Fe** has been awarded funds for drainage assessment, modeling, conceptual design and final design of bio-infiltration basins to manage and treat stormwater collected by Siringo Road facility and surrounding neighborhoods. Funds shall be utilized as outlined in the approved budget as awarded by FEMA on **July 26,2024.** The Sub Recipient shall match the Federal Award Amount of **$263,221.25** with a local jurisdictional amount of **$87,740.41,** and a subrecipient management cost at 100% federal cost share of **$13,859.25** for a total project cost of **$364,820.91.** All work performed pursuant to this agreement must comply with the approved FEMA application. All work must be completed within the performance period, between **07/26/2024 – 01/25/2027.** The **City of Santa Fe** shall not sub-grant any part of this award to any other entity or organization. Within the first reporting quarter, all awards require confirmation that expenditures in the budget category toward this project will be made. If not, DHSEM may execute a de-obligation of Federal funds without recourse by the **City of Santa Fe.**

B. Approved projects must commence within the first reporting quarter. If a project cannot commence and be operational within the first reporting quarter of the approved award date, the sub–Recipient must submit a written statement to DHSEM, signed by the sub-recipient signatory officials, justifying the delay in implementation, the expected starting date, and a formal request to extend the project start date past the first reporting quarter. At the sole discretion of DHSEM, the grant award is subject to cancellation, and funds may be de-obligated and reallocated to other projects.

ARTICLE 5: PUBLICATIONS

A. Publications created with funding under this grant shall prominently contain the following statement or a DHSEM pre-approved modification: **This Document was prepared under a sub-grant from the FEDERAL EMERGENCY MANAGEMENT AGENCY, and the NEW MEXICO DEPARTMENT OF HOMELAND SECURITY AND EMERGENCY MANAGEMENT. Points of view or opinions expressed in this document are those of the authors and do not necessarily represent the official position or policies of the Federal Emergency Management Agency and the New Mexico Department of Homeland Security and Emergency Management.**

ARTICLE 6: PERFORMANCE PERIODS

The performance period for this sub-grant award is **07/26/2024 – 01/25/2027.** Further, all personnel-related grant activity must be completed between **07/26/2024 – 01/25/2027.** Funds may not be obligated outside of these time periods. An obligation occurs when funds are encumbered, as with a purchase order and/or commitment of salaries and benefits**. All obligated and encumbered funds *must be liquidated* within 45 days of the end of the performance period when the *Final Progress and Financial Reports* are due**.

ARTICLE 7: RECOVERY OF FUNDS FOR DUPLICATION OF BENEFITS AND INELIGIBLE ACTIVITIES

A. Ineligible Activities. The FEMA and/or NMDHSEM may disallow costs and recover funds based on the results of audit or review during or after performance of the award to ensure compliance with the terms of the Sub-recipient Grant Agreement and award document. The FEMA and/or NMDHSEM is required to recover funds when the sub-recipient has ineligible underruns (for example, actual costs for a PA large project are less than the amount awarded based on initial estimates); knowingly or negligently withholds or misrepresents material information; fails to complete work and comply with the terms of this Sub-recipient Grant Agreement or the approved award; expends federal funds in error; or incurs costs that are unreasonable or otherwise disallowed. If, after exhaustion of appeal rights, FEMA and/or NMDHSEM determines a debt is owed, the State has 30 days to resolve the amount owed before the debt is referred to the FEMA Finance Center for collection. The State may do so by directly paying FEMA. The State may also deposit the amount owed directly into the applicable subaccount in U.S. Health and Human Services (HHS)/Smartlink and notify FEMA when it has reimbursed that subaccount, after which FEMA will de-obligate that amount in the subaccount. Alternatively, the sub-recipient may request to substitute unallowable costs for other costs that are allowable (e.g., necessary, allocable, and reasonable under the same award and have not yet been reimbursed by FEMA).

B. Duplication of Benefits. In accordance with the provisions of 42 U.S.C. § 5155 (Section 312 of the Stafford Act), duplication of benefits is prohibited. The NMDHSEM must take all actions necessary and reasonable to ensure that all who receive federal assistance are aware of their responsibility to repay federal assistance that is duplicated by amounts available from insurance or any other source for the same purpose. The FEMA and/or NMDHSEM may at any time, pre-award or post-award, adjust the level of funding provided to account for financial assistance provided from any other source for the same purpose as the federal assistance or to account for benefits available for the same purpose from another source, irrespective of whether they are actually received. The sub-recipient shall notify NMDHSEM, as soon as practicable, of the existence of any insurance coverage for the costs identified in the application and of any entitlement to or recovery of funds from any other source for the project costs, including Small Business Administration funding, United States Department of Agriculture (USDA), and other Federal, State, and private funding. The amount of duplicate sources available shall reduce allowable costs. The sub-recipient shall be liable to NMDHSEM to the extent that the sub-recipient receives duplicate benefits from any other source for the same purposes for which the sub-recipient has received payment from the NMDHSEM.

C. Cooperation. The NMDHSEM agrees, on its behalf and on behalf of its political subdivisions and others that receive federal assistance, to cooperate with the Federal Government in seeking recovery of federal assistance against any party or parties whose intentional acts or omissions or whose negligence or other tortious conduct may have caused or contributed to the damage or hardship for which federal assistance was provided under this Sub-recipient Grant Agreement. If applicable, FEMA will treat recovered funds as duplicated benefits available to NMDHSEM/sub-recipient in accordance with Section 312 of the Stafford Act (codified as amended at 42 U.S.C. § 5155).

D. NMDHSEM Responsibilities. The NMDHSEM is responsible for recovering federal assistance expended in error, misrepresentation, fraud, or for costs otherwise disallowed or unused.

a. The NMDHSEM must notify FEMA of any potential debt as a result of federal funds expended in error, misrepresentation, fraud, or for costs otherwise disallowed or unused.

b. The NMDHSEM must report all cases of suspected fraud to the USDHS Office of Inspector General. The NMDHSEM must cooperate with any investigation conducted by the USDHS Office of Inspector General. The NMDHSEM must cooperate with FEMA regarding any and all lawsuits that may result from the NMDHSEM or FEMA's attempt to recover funds or disallow costs.

E. Statute of Limitations. The 3-year statute of limitations limiting FEMA's ability to initiate an administrative action to recover funds paid as provided for in Section 705(a) of the Stafford Act (codified as amended at 42 U.S.C. § 5205(a)) begins with:

a. Initiation of an Administrative Action to Recover Payment. The initiation of an administrative action to recover payment includes FEMA's written notice to the NMDHSEM or a sub-recipient of a questioned or disallowed cost or improper payment (including a request for information concerning such cost or payment) and written notice to the NMDHSEM or a sub-recipient of a FEMA or 3rd party review or audit.

F. Refunds, Rebates, and Credits. The NMDHSEM must transfer to FEMA the appropriate share, based on the federal support percentage, of any refund, rebate, credit or other amounts arising from the performance of this Sub-recipient Grant Agreement. The NMDHSEM must take necessary action to promptly collect all monies due or which may become due and if applicable, to cooperate with the Federal Government in any claim or suit in connection with amounts due.

G. Non-Compliant Sub-recipients. As per 2 C.F.R. §§ 200.207, 200.303(d) and 200.338(A-F), NMDHSEM can selectively use any or all the following remedies and prompt actions for non-compliance with any term of an award to include audit finding(s):

- **a.** Increased monitoring of projects and require additional financial and performance reports.
- **b.** Disallow advance payment process.
- **c.** Temporarily withhold payments pending correction of the deficiency.
- **d.** Disallow or deny use of funds and matching credit for all or part of the cost of the activity or action not in compliance.
- **e.** Request FEMA to completely or partially de-obligate funding for a project.
- **f.** Temporarily withhold payments pending correction of the deficiency by the sub-recipient.
- **g.** Withhold further awards for the grant program.
- **h.** Take other programmatic or legally available remedies.

ARTICLE 8: CONSTRUCTION REQUIREMENTS

A. The NMDHSEM must ensure that all applicable federal, state, and local permits and approvals are obtained, and all permit conditions are addressed before the start of any construction activity, including FEMA and NMDHSEM/sub-recipient compliance with the National Environmental Policy Act, the National Historic Preservation Act, the Endangered Species Act, and all other applicable environmental laws and executive orders. All construction should be in accordance with approved permits, projects plans and specifications, applicable building codes, and program guidance.

ARTICLE 9: NATIONAL ENVIRONMENTAL POLICY ACT (NEPA)/ENVIRONMENTAL PLANNING AND HISTORIC PRESERVATION (EHP) COMPLIANCE

A. The sub-recipient must provide information to FEMA the legally required environmental planning and historic preservation (EHP) review and to ensure compliance with the applicable EHP laws and Executive Orders (EO). These EHP requirements include but are not limited to National Environmental Policy Act, National Historic Preservation Act, Endangered Species Act, E 11988 Floodplain Management, EO 11990 Protection of Wetlands, and EO 12898 Environmental Justice. The sub-recipient must comply with all federal, state, local, tribal, and territorial EHP requirements and obtain applicable permits and clearances.

B. Sub-recipients shall not undertake any activity from the project that would result in ground disturbance, facility modification, or relates to the use of sonar equipment without the prior approval of FEMA. These include but are not limited to communications towers, physical security enhancements involving ground

disturbance, new construction, and modifications to buildings that are 50 years old or older, and exercises. The sub-recipient must comply with all mitigation or treatment measures required for the project as the result of FEMA's EHP review. An EHP Screening Form does not need to be provided for those exercises that are planned to take place at previously approved facilities, such as, fire and police academies, search and rescue training facilities, and explosive testing centers. Any type of exercise that requires any type of land, water, or vegetation disturbance or building of temporary structures must undergo an EHP review.

C. Any change to an approved project description will require re-evaluation for compliance with EHP requirements before the project can proceed. If ground disturbing activities occur during project implementation, the sub-recipient must ensure monitoring of ground disturbance and if any potential archeological resources are discovered, the sub-recipient will immediately cease construction in that area and notify NMDHSEM, FEMA and the New Mexico Historic Preservation Division. Initiation of these activities prior to completion of FEMA's EHP review will result in a non-compliance finding and may result in ineligibility of grant funding.

ARTICLE 10: PROPERTY AND EQUIPMENT MANAGEMENT

A. The sub-recipient will follow the property standards articulated in 2 C.F.R. § 200.310 through 2 CFR 200.326. The sub-recipient shall, when practical, prominently display the following on any equipment purchased with award funds: **PURCHASED WITH FUNDS PROVIDED BY THE FEDERAL EMERGENCY MANAGEMENT AGENCY.** No equipment purchased with these grant funds may be assigned to other entities or organizations without the expressed approval in writing from DHSEM prior to the jurisdiction's encumbrance or expenditure for that equipment.

B. The subrecipient will follow the property standards articulated in 2 C.F.R. § 200.310 through 2 C.F.R. § 200.326. The subrecipient shall maintain an effective property management system; safeguards to prevent loss, damage or theft; maintenance procedures to keep equipment in good condition; and disposition procedures. A Property Inventory Report shall be submitted to NMDHSEM annually each January 30 with the Financial Progress Report during the performance period, and continued submission is required annually until final disposition of the equipment. The subrecipient shall, when practical, prominently display the following on any equipment purchased with award funds: Purchased with funds provided by the U.S. Department of Homeland Security. No equipment purchased with these grant funds may be assigned to other entities or organizations without the expressed approval in writing from NMDHSEM, prior to the jurisdiction's encumbrance or expenditure for that equipment.

C. Any disposition of property or equipment must be in accordance with 2 C.F.R. § 200.313(e) and pre-approved by FEMA through NMDHSEM.

ARTICLE 11: SUBRECIPIENT MONITORING POLICY

A. In accordance with 2 C.F.R. § 200.328, NMDHSEM may periodically monitor a sub-recipient's projects to ensure that program goals, objectives, timelines, budgets, and other related program criteria are being met. The NMDHSEM reserves the right to periodically review and conduct analysis of the sub-recipient's financial, programmatic, and administrative policies and procedures. This monitoring may include review of accounting for receipts and expenditures, cash management, maintaining adequate financial records, means of allocating and tracking costs, contracting, procurement, records management, payroll, means of allocating staff costs, property and equipment management system, progress of project activities, etc. This may include unscheduled desk audits and field inspections. The sub-recipient shall accommodate all such requests within reason. If the sub-recipient encounters any unanticipated problem with the Scope of Work, allowed costs, procurement, permitting, or other difficulty, the sub-recipient must communicate that problem to NMDHSEM promptly. Work on affected projects must be suspended until the problem is

resolved. Technical assistance is available from NMDHSEM staff.

B. The sub-recipient will immediately, no later than 24-hours upon notice, report to NMDHSEM allegations of wrong-doing on the part of any contractor, sub-contractor, agent or employee of the sub-recipient, or other interested party in reference to the work authorized under this Sub-recipient Grant Agreement. This extends to any legal action, lawsuit, bankruptcy, or other action that may jeopardize the successful completion of any authorized project.

ARTICLE 12: PROCUREMENT

A. Procurement shall comply with all federal, state, and local procurement requirements including 2 C.F.R. § 200.320 and the New Mexico Procurement Code for expenditure of funds under this Agreement. The Applicant must conform to applicable state and federal law and the Procurement Standards Sections 2 C.F.R. § 200.317-326, and Appendix II. Contractors that develop or draft specifications, requirements, Statements of Work, and/or Requests for Proposals (RFP) for a proposed procurement shall be excluded from bidding or submitting a proposal to compete for the award of such procurement. Local bidder's preference is not allowed for federally funded procurements. Procurement transactions shall be conducted to provide maximum open and free competition.

B. When procuring property and services under this agreement, the sub-recipient will follow 2 C.F.R. § 200.318 through 2 C.F.R. § 200.326 and Appendix II. The sub-recipient must use its own documented procurement procedures which reflect applicable state, local, tribal, and territorial laws, and regulations, provided that the procurements conform to applicable federal law and the standards identified in 2 C.F.R. § 200. As such, the sub-recipient must use one of the methods of procurement identified in 2 C.F.R. § 200.320.

C. Also, per 2 C.F.R. § 200.318(i), subrecipients are required to maintain and retain records sufficient to detail the history of procurement covering at least the rationale for the procurement method, selection of contract type, contractor selection or rejection, and the basis for the contract price. States and territories are encouraged to maintain and retain this information as well and are reminded that in order for any cost to be allowable, it must be adequately documented per 2 C.F.R. § 200.403(g). Examples of the types of documents that would cover this information include but are not limited to:

- **a.** Solicitation documentation, such as requests for quotes, invitations for bids, or requests for proposals;
- **b.** Responses to solicitations, such as quotes, bids, or proposals;
- **c.** Pre-solicitation independent cost estimates and post-solicitation cost/price analyses on file for review by federal personnel, if applicable;
- **d.** Contract documents and amendments, including required contract provisions; and
- **e.** Other documents required by federal regulations applicable at the time a subgrant is awarded to a subrecipient.

D. Procurement from Minority Owned and Women Owned Business is encouraged and must be tracked and reported to NMDHSEM on the quarterly reports. Procurement transactions shall be conducted to provide maximum open and free competition. Each sole–source procurement single vendor response to a competitive bid, and all purchases require prior approval of NMDHSEM.

E. The sub-recipient will follow the property standards articulated in 2 C.F.R. § 200.310 through 2 C.F.R. § 200.326. The sub-recipient shall maintain an effective property management system; safeguards to prevent loss, damage or theft; maintenance procedures to keep equipment in good condition; and disposition procedures. Property and equipment records shall be maintained for a period of three years following the final disposition, replacement or transfer of the property and equipment.

ARTICLE 13: CONTRACTS

A. Contractors that develop or draft specifications, requirements, Statements of Work, and/or Requests for Proposals (RFP) for a proposed procurement shall be excluded from bidding or submitting a proposal to compete for the award of such procurement. Local bidder's preference is not allowed for federally funded procurements. Procurement transactions shall be conducted to provide maximum open and free competition. Each sole–source procurement, single vendor response to a competitive bid, and all purchases require prior approval of DHSEM.

B. Any contract shall comply with the requirements of Procurement Standards Sections of 28 C.F.R. Parts 66 and 70, 2 C.F.R. Part 200 and OMB Circulars A–102 "Uniform Administrative Requirements for Grants and Cooperative Agreements with State and Local Governments" for expenditure of Federal funds under this Sub-recipient Grant Agreement. Applicants shall submit procurement and contracts to NMDHSEM for review prior to approval. Contracts for professional services must meet applicable local, state, and federal requirements. All contractors must be licensed in New Mexico for the type of work that is required. Prior to any contracted work beginning, the sub-recipient shall provide NMDHSEM with a copy of the contractor's license. Contract work must not exceed the scope of work and PW awarded amount prescribed by FEMA, unless requested through a scope of work change and approval from FEMA.

C. Any contract entered during this sub-grant period shall comply with local, State, and Federal government contracting regulations. Professional and consultant services contracts must include local, State, and Federal government-required contract language, a project budget, SOW, and a pay schedule. ***All contracts require pre-approval by DHSEM prior to execution.*** Contract deliverables must meet the intent of the grant application and grant requirements. Justification is required for compensation for individual consultant services, which must be reasonable and consistent with the amount paid for similar services in the marketplace. Detailed invoices and time and effort reports are required for consultants.

ARTICLE 14: COMPETITION AND CONFLICTS OF INTEREST

A. Among the requirements of 2 C.F.R. § 200.319(b) applicable to all non-federal entities other than states, in order to ensure objective contractor performance and eliminate unfair competitive advantage, contractors that develop or draft specifications, requirements, statements of work, or invitations for bids or requests for proposals must be excluded from competing for such procurements. The FEMA considers these actions to be an organizational conflict of interest and interprets this restriction as applying to contractors that help a subrecipient develop its grant application, project plans or project budget. This prohibition also applies to the use of former employees to manage the grant or carry out a contract when those former employees worked on such activities while they were employees of the non-federal entity.

B. Under this prohibition, unless the subrecipient solicits for and awards a contract covering both development and execution of specifications (or similar elements as described above), and this contract was procured in compliance with 2 C.F.R. §§ 200.317 – 200.327, federal funds cannot be used to pay a contractor to carry out the work if that contractor also worked on the development of those specifications. This rule applies to all contracts funded with federal grant funds, including pre-award costs, such as grant writer fees, as well as post-award costs, such as grant management fees. Additionally, some of the situations considered to be restrictive of competition include, but are not limited to:

- **a.** Placing unreasonable requirements on firms for them to qualify to do business;
- **b.** Requiring unnecessary experience and excessive bonding;
- **c.** Noncompetitive pricing practices between firms or between affiliated companies;
- **d.** Noncompetitive contracts to consultants that are on retainer contracts;
- **e.** Organizational conflicts of interest;

f. Specifying only a "brand name" product instead of allowing "an equal" product to be offered and describing the performance or other relevant requirements of the procurement; and

g. Any arbitrary action in the procurement process.

C. Per 2 C.F.R. § 200.319(c), the subrecipient must conduct procurements in a manner that prohibits the use of statutorily or administratively imposed state, local, tribal, or territorial geographical preferences in the evaluation of bids or proposals, except in those cases where applicable federal statutes expressly mandate or encourage geographic preference. Nothing in this section preempts state licensing laws. **When contracting for architectural and engineering services, geographic location may be a selection criterion, provided its application leaves an appropriate number of qualified firms, given the nature and size of the project, to compete for the contract.**

D. Under 2 C.F.R. § 200.318(c)(1), the subrecipient is required to maintain written standards of conduct covering conflicts of interest and governing the actions of their employees engaged in the selection, award, and administration of contracts. **No employee, officer, or agent may participate in the selection, award, or administration of a contract supported by a federal award if he or she has a real or apparent conflict of interest.** Such conflicts of interest would arise when the employee, officer or agent, any member of his or her immediate family, his or her partner, or an organization that employs or is about to employ any of the parties indicated herein, has a financial or other interest in or a tangible personal benefit from a firm considered for a contract. The non-federal entity's officers, employees, and agents may neither solicit nor accept gratuities, favors, or anything of monetary value from contractors or parties to subcontracts. However, subrecipient entities may set standards for situations in which the financial interest is not substantial, or the gift is an unsolicited item of nominal value. The standards of conduct must provide for disciplinary actions to be applied for violations of such standards by officers, employees, or agents of the non-federal entity.

E. Under 2 C.F.R. § 200.318(c)(2), if the subrecipient has a parent, affiliate, or subsidiary organization that is not a state, local, tribal or territorial government, the subrecipient must also maintain written standards of conduct covering organizational conflicts of interest. In this context, organizational conflict of interest means that because of a relationship with a parent company, affiliate, or subsidiary organization, the subrecipient is unable or appears to be unable to be impartial in conducting a procurement action involving a related organization. The non-federal entity must disclose in writing any potential conflicts of interest to FEMA or NMDHSEM in accordance with applicable FEMA policy.

ARTICLE 15: CONTRACTS

A. Contracts for professional and consultant services executed during this grant period must include federal, state, local, tribal, and territorial government required contract language, a project budget, and require pre-approval by NMDHSEM prior to implementation. Contract deliverables must meet the intent of the grant application and grant requirements. Justification is required for compensation for individual consultant services, which must be reasonable and consistent with the amount paid for similar services in the marketplace. Detailed invoices and time and effort reports are required for consultants. *See* 2 C.F.R. § 200.1, 2 C.F.R. § 200 Appendix II to Part 200.

ARTICLE 16: AUDIT REQUIREMENTS

A. As a federal grant recipient, the State of New Mexico requires a sub-recipient expending $750,000 or more in federal funds in the organization's fiscal year to conduct an organization–wide audit in accordance with the Single Audit described in 2 C.F.R. § 200.501. The sub-recipient will permit state or federal officials and auditors to have access to sub-recipient and contractor records and financial statements as necessary for

the state to comply with 2 C.F.R. § 200.501. Copies of audit findings must be submitted to NMDHSEM within 30 days after the sub-recipient receives its audit report, or within a 9-month period of the grant closeout date, whichever is earlier. Include the federal agency name, program, grant number, the CFDA title and number, and the name of the pass-through agency (NMDHSEM) in all documents.

ARTICLE 17: RECORDS RETENTION

A. Records Retention.

a. **State Requirement.** The State must retain records for three years after all projects are complete and the federal disaster is formally closed out, except in certain rare circumstances described in 2 C.F.R. § 200.334 (Retention requirements for records), from the date it submits the final Federal Financial Report (SF-425) to FEMA in compliance with 2 C.F.R. § 200.334. If FEMA administratively closes the grant where no final SF-425 was submitted, FEMA uses the date the grant was administratively closed as the start date for the three-year record retention period.

b. **Sub-recipient Requirement.** The sub-recipients must retain project or subaward records for at least three years from the date that the NMDHSEM submits to FEMA the final expenditure report for a project or subaward. If, however, there is any litigation, claim, negotiation, audit, request for information, or other action involving the project or subaward that starts before that date, the records must be retained until completion of the action and resolution of all issues which arise from it, or until the end of the three-year period, whichever is later.

c. The sub-recipient will follow the record retention and access standards articulated in 2 C.F.R. § 200.333 through 2 C.F.R. § 200.337. The grant financial and administrative records shall be maintained for a period of three years following the date of the closure of the grant award, or audit if required. Time and effort, personnel and payroll records for all individuals reimbursed under the award must be maintained. Property and equipment records shall be maintained for a period of three years following the final disposition, replacement or transfer of the property and equipment.

d. The sub-recipient will be required to maintain project records until the expiration of the appropriate retention period. This includes records related to Management Costs, procurement, contracting, accounts payable, engineering, inventory, force account (materials, labor, and equipment), insurance settlements or other records related to the project scope of work. Retention procedures are outlined in the Hazard Mitigation Assistance Grant Programs Administrative Plan.

ARTICLE 18: CHANGES TO AWARD

A. All change requests must be submitted either in writing or electronically to the NMDHSEM contact for review 90 days prior to the termination of this Sub-recipient Grant Agreement. All change requests must be accompanied by a justification narrative and a budget and spending plan. All change requests must be consistent with the scope of the project and grant guidelines. Change requests will be considered only if reporting requirements are current, and all other terms and conditions of this Sub-recipient Grant Agreement have otherwise been met at the time of the request. If approved by NMDHSEM and FEMA, changes in the programmatic activities, purpose of the project, key personnel specified on the grant award, contractual services for activities central to the purposes of the award, change in project site, or release of special conditions, will result in an amendment to this award. Requests for changes must be formally submitted to NMDHSEM and FEMA.

B. Changes to this Sub-recipient Grant Agreement will be made via a Sub-recipient Grant Agreement Amendment. The NMDHSEM will prepare each Amendment when needed. No Sub-recipient Grant

Agreement Amendment is valid until fully executed.

ARTICLE 19: REMEDIES FOR NONCOMPLIANCE

A. For the reasons listed below, special conditions may be imposed, reimbursements may be partially or wholly withheld, the award may be wholly or partly suspended or terminated, or future awards, reimbursements and award modifications may be withheld. The NMDHSEM may institute the following, but is not limited to, withholding authority to proceed to the next phase of a project, requiring additional or more detailed financial reports, additional project monitoring, and/or establish additional prior approvals. The NMDHSEM shall notify the sub-recipient of its decision in writing stating the nature and the reason for imposing the conditions/restrictions, the corrective action required and timeline to remove them, and the method of requesting reconsideration of the imposed conditions/restrictions. The sub-recipient must respond within five days of receipt of notification.

- **a.** Unwillingness or inability to attain project goals or scope of work.
- **b.** Unwillingness or inability to adhere to Special Conditions of this Sub-recipient Grant Agreement.
- **c.** Failure or inability to adhere to grant guidelines and federal compliance requirements.
- **d.** Improper procedures regarding contracts and procurements.
- **e.** Failure to submit reliable and/or timely reports.
- **f.** Fiscal management which does not meet reasonable professional standards.
- **g.** Failure or inability to adhere to the terms and conditions of this Sub-recipient Grant Agreement.
- **h.** Unwillingness or inability to obtain permits required by law to perform the eligible work.
- **i.** Noncompliance with any and all federal, state, local and tribal grant requirements.

B. The NMDHSEM shall notify the sub-recipient of any non-compliance issues in writing and shall attempt to arrive at a resolution in a timely and reasonable fashion. If corrective action is required, NMDHSEM and the sub-recipient shall determine a timeline and landmarks for remediation. The NMDHSEM may require additional detailed financial reports or additional project monitoring. The ultimate penalty for non-compliance with the terms and conditions of this Sub-recipient Grant Agreement is for payments to be withheld or for the award to be suspended or terminated. The sub-recipient agrees to make restitution if necessary.

C. The NMDHSEM may take action as it determines appropriate under the circumstances including but not limited to withholding of payments, disallowance of costs, suspension or termination of the award if the sub-recipient fails to comply with applicable Federal and State statutes, regulations, or the terms of this Sub-recipient Grant Agreement pursuant to 2 C.F.R. § 200.339.

D. Nothing in this section abrogates the sub-recipient's right of appeal.

ARTICLE 20: TERMINATION

A. **For Cause:** In compliance with 2 C.F.R. § Part 200.340(a)(1), if performance is not occurring as agreed, the award may be reduced or terminated without compensation for reduction or termination costs. The NMDHSEM will provide notice of five days to the subrecipient stating the reasons for the action, steps taken to correct the problems, and the commencement date of the reduction or termination. The NMDHSEM will reimburse the subrecipient only for acceptable work or deliverables, necessary and allowable costs incurred through the date of reduction or termination. Final payment may be withheld at the discretion of NMDHSEM until completion of a final NMDHSEM review. Disposition of any equipment acquired under a terminated grant must be in accordance with 2 C.F.R. § 200.313(e).

B. For Convenience: In compliance with 2 CFR Part 200.340(a)(4), this Agreement may be terminated without cause by the subrecipient upon written notice setting forth the reasons for such termination, and the effective date at least 30 days prior to the intended date of termination. A termination pursuant to this provision does not nullify a party's obligations for performance, or liabilities for failure to perform already incurred prior to the date of termination. Any project may be terminated upon convenience, in whole or in part, for the convenience of the subrecipient; though a partial termination notification must specify that portion of the project which is to be terminated. Allowable costs obligated and/or incurred through the date of termination shall be reimbursed. Disposition of any equipment acquired under a terminated grant must be in accordance with 2 C.F.R. § 200.313(e).

ARTICLE 21: CLOSEOUT OF SUB-GRANT

A. Closeout of Projects. Per 2 C.F.R. § 200.344, sub-recipients must submit all cost and supporting documentation for completed projects. The NMDHSEM will review and verify all costs and supporting documents to validate compliance. Failure to comply will result in de-obligation of the project. The NMDHSEM will close each sub-recipient file once it has conducted full review and approval of all supporting documents for compliance and all projects are completed and has project activity closed out.

a. Management Costs. Management Costs will be used for internal staff salaries, contractor payments and other support costs associated with this grant. This will be in accordance with all laws, rules, and FEMA regulations. Management Costs will be processed in accordance with the Hazard Mitigation Assistance Program and Policy Guide.

The NMDHSEM commits to closeout of all grants regardless of the availability of management costs.

ARTICLE 22: SPECIAL CONDITIONS

A. The terms of this Sub-recipient Grant Agreement are contingent upon sufficient appropriations and authorizations being made by the USDHS FEMA under the Robert T. Stafford Disaster Relief and Emergency Assistance Act U.S.C. §§ 5121-5207. If sufficient appropriations and authorizations are not made by FEMA this Sub-recipient Grant Agreement shall terminate immediately upon written notice being given by NMDHSEM to the sub-recipient. The decision of NMDHSEM shall be final.

B. If NMDHSEM proposes an Amendment to the Sub-recipient Grant Agreement to unilaterally reduce funding, the sub-recipient shall have the option to terminate the Sub-recipient Grant Agreement or agree to the reduced funding within 30 days of receipt of the proposed Amendment.

C. Each party shall be solely responsible for fiscal or other sanctions occasioned because of its own violation of requirements applicable to the performance of this Sub-recipient Grant Agreement. Each party shall be liable for its own actions or inactions in accordance with state law and nothing herein shall be deemed a waiver, indemnity or to otherwise create or effect liabilities between the parties.

D. The grant award amount is a funding allocation and is not to be interpreted as expenditure authorizations or approvals.

E. All awarded projects must be planned for, conducted, budgeted, and expended within the designated performance period.

F. Quarterly financial and progress reports are due on October 15, January 15, April 15, and July 15, within the POP. Final reports are due 15 days after the end of POP.

G. All revision requests must be reviewed and approved by NMDHSEM staff. All requests must meet the original scope of the project which may result in a sub-recipient grant amendment.

H. A revision of a project's SOW must be pre-approved by NMDHSEM staff before the jurisdiction can proceed with the request for approval process. If the revision is approved, NMDHSEM staff may request additional documentation to proceed with recommendation to NMDHSEM Leadership for final approval.

I. The beneficiary of this award is solely responsible for all expenditures that are incurred outside of the award performance period. All expenditures that are incurred above and beyond the amount of this Sub-recipient Grant Agreement are the sole responsibility of the sub-recipient of this award.

J. Procurement from Minority Owned and Women Owned Business is encouraged and must be tracked and reported to NMDHSEM on the quarterly reports.

K. Upon completion of all awarded projects, any remaining funds will be de-obligated and reverted to NMDHSEM for return to FEMA.

L. Extensions due to exigent or emergency circumstances will be determined by NMDHSEM on a case-by-case basis.

State of New Mexico
Department of Homeland Security & Emergency Management
P.O. Box 27111
Santa Fe, NM 87502

The acceptance of a subgrant from the United States and the State of New Mexico creates a legal duty and obligation on the part of the sub-recipient to use the funds or property made available in accordance with the conditions of the grant as administered by and through the New Mexico Department of Homeland Security and Emergency Management. By signing this obligating award document, the sub-recipient certifies it has read, understood, and accepted these documents as binding.

SUB-RECIPIENT GRANT AGREEMENT
Signatures of Acceptance

SUB-GRANT NO:	**DR-5430-0012-NM**		
JURISDICTION GRANT PROGRAM MANAGER PRINTED NAME:			
OFFICIAL SIGNATURE:		**DATE:**	
CONTACT NUMBER:		**E-MAIL ADDRESS:**	
JURISDICTION CHIEF FINANCIAL OFFICER PRINTED NAME:			
OFFICIAL SIGNATURE:		**Date:**	
CONTACT NUMBER:		**E-MAIL ADDRESS:**	
JURISDICTION SIGNATORY OFFICIAL PRINTED NAME:			
OFFICIAL SIGNATURE:		**DATE:**	
CONTACT NUMBER:		**E-MAIL ADDRESS:**	
NMDHSEM MITIGATION PROGRAM BUREAU CHIEF PRINTED NAME:			
NMDHSEM MITIGATION PROGRAM BUREAU CHIEF OFFICIAL SIGNATURE / DATE:			
NMDHSEM GRANTS MANAGEMENT BUREAU CHIEF PRINTED NAME:			
NMDHSEM GRANTS MANAGEMENT BUREAU CHIEF OFFICIAL SIGNATURE / DATE:			
NMDHSEM DEPUTY CABINET SECRETARY OFFICIAL PRINTED NAME:			
NMDHSEM DEPUTY CABINET SECRETARY OFFICIAL SIGNATURE / DATE:			

Print one original agreement, sign and email to: DHSEM.MITIGATION@DHSEM.nm.gov

CITY OF SANTA FE:

_____
ALAN WEBBER, MAYOR

DATE:_____

ATTEST:

_____
CITY CLERK

CITY ATTORNEY'S OFFICE:

_____
ASSISTANT CITY ATTORNEY

APPROVED FOR FINANCES:

Emily K. Oster 11/01/2024
_____
FINANCE DIRECTOR

The page is intentionally left blank.

ATTACHMENT 1
USDHS Standard Terms and Conditions
(January 24, 2022)

The Fiscal Year (FY) 2022 USDHS Standard Terms and Conditions apply to all new federal financial assistance awards funded in FY 2022. These terms and conditions flow down to sub-recipients unless an award term or condition specifically indicates otherwise. The United States has the right to seek judicial enforcement of these obligations.

All legislation and digital resources are referenced with no digital links. The FY 2022 USDHS Standard Terms and Conditions will be housed on dhs.gov at www.dhs.gov/publication/fy15-dhs- standard-terms-and-conditions.

A. Assurances, Administrative Requirements, Cost Principles, Representations and Certifications

I. USDHS financial assistance recipients must complete either the Office of Management and Budget (OMB) Standard Form 424B Assurances – Non-Construction Programs, or OMB Standard Form 424D Assurances – Construction Programs, as applicable. Certain assurances in these documents may not be applicable to your program, and the USDHS financial assistance office (USDHS FAO) may require applicants to certify additional assurances. Applicants are required to fill out the assurances as instructed by the awarding agency.

II. USDHS financial assistance recipients are required to follow the applicable provisions of the Uniform Administrative Requirements, Cost Principles, and Audit Requirements for Federal Awards located at Title 2, Code of Federal Regulations (C.F.R.) Part 200 and adopted by USDHS at 2 C.F.R. Part 3002.

III. By accepting this Agreement, recipients, and their executives, as defined in 2 C.F.R. § 170.315, certify that their policies are in accordance with OMB's guidance located at 2 C.F.R. Part 200, all applicable federal laws, and relevant Executive guidance.

B. General Acknowledgements and Assurances

All recipients, sub-recipients, successors, transferees, and assignees must acknowledge and agree to comply with applicable provisions governing USDHS access to records, accounts, documents, information, facilities, and staff.

I. Recipients must cooperate with any USDHS compliance reviews or compliance investigations conducted by USDHS.

II. Recipients must give USDHS access to examine and copy records, accounts, and other documents and sources of information related to the federal financial assistance award and permit access to facilities or personnel.

III. Recipients must submit timely, complete, and accurate reports to the appropriate USDHS officials and maintain appropriate backup documentation to support the reports.

IV. Recipients must comply with all other special reporting, data collection, and evaluation requirements, as prescribed by law, or detailed in program guidance.

V. Recipients (as defined in 2 C.F.R. Part 200 and including recipients acting as pass-through entities) of federal financial assistance from USDHS or one of its awarding component agencies must complete the USDHS Civil Rights Evaluation Tool within thirty (30) days of receipt of the Notice of Award for the first award under which this term applies. Recipients of multiple awards of USDHS financial assistance should only submit one completed tool for their organization, not per award. After the initial submission, recipients are required to complete the tool once every two (2) years if they have an active award, not every time an award is made. Recipients should submit the completed tool, including supporting materials, to CivilRightsEvaluation@hq.dhs.gov. This tool clarifies the civil rights obligations and related reporting requirements contained in the USDHS

Standard Terms and Conditions. Sub-recipients are not required to complete and submit this tool to USDHS. The evaluation tool can be found at https://www.dhs.gov/publication/dhs- civil-rights-evaluation-tool.

The USDHS Office for Civil Rights and Civil Liberties will consider, in its discretion, granting an extension if the recipient identifies steps and a timeline for completing the tool. Recipients should request extensions by emailing the request to CivilRightsEvaluation@hq.dhs.gov prior to expiration of the 30-day deadline.

C. Standard Terms & Conditions

I. Acknowledgement of Federal Funding from USDHS

Recipients must acknowledge their use of federal funding when issuing statements, press releases, requests for proposal, bid invitations, and other documents describing projects or programs funded in whole or in part with federal funds.

II. Activities Conducted Abroad

Recipients must ensure that project activities performed outside the United States are coordinated as necessary with appropriate government authorities and that appropriate licenses, permits, or approvals are obtained.

III. Age Discrimination Act of 1975

Recipients must comply with the requirements of the Age Discrimination Act of 1975, Public Law 94-135 (1975) (codified as amended at Title 42, U.S. Code, § 6101 et seq.), which prohibits discrimination on the basis of age in any program or activity receiving federal financial assistance.

IV. Americans with Disabilities Act of 1990

Recipients must comply with the requirements of Titles I, II, and III of the Americans with Disabilities Act, Pub. L. 101-336 (1990) (codified as amended at 42 U.S.C. §§ 12101– 12213), which prohibits recipients from discriminating on the basis of disability in the operation of public entities, public and private transportation systems, places of public accommodation, and certain testing entities.

V. Best Practices for Collection and Use of Personally Identifiable Information

Recipients who collect personally identifiable information (PII) are required to have a publicly available privacy policy that describes standards on the usage and maintenance of the PII they collect. USDHS defines PII as any information that permits the identity of an individual to be directly or indirectly inferred, including any information that is linked or linkable to that individual. Recipients may also find the USDHS Privacy Impact Assessments: Privacy Guidance and Privacy Template as useful resources respectively.

VI. Civil Rights Act of 1964 – Title VI

Recipients must comply with the requirements of Title VI of the Civil Rights Act of 1964 (codified as amended at 42 U.S.C. § 2000d et seq.), which provides that no person in the United States will, on the grounds of race, color, or national origin, be excluded from participation in, be denied the benefits of, or be subjected to discrimination under any program or activity receiving federal financial assistance. USDHS implementing regulations for the Act are found at 6 C.F.R. Part 21 and 44 C.F.R. Part 7.

VII. Civil Rights Act of 1968

Recipients must comply with Title VIII of the Civil Rights Act of 1968, Pub. L. 90-284, as amended through Pub. L. 113-4, which prohibits recipients from discriminating in the sale, rental, financing, and advertising of dwellings, or in the provision of services in connection therewith, on the basis of race, color, national origin, religion, disability, familial status, and sex (see 42 U.S.C. § 3601 et seq.), as implemented by the U.S. Department of Housing and Urban Development at 24 C.F.R. Part 100. The prohibition on disability discrimination includes the requirement that new multifamily housing with four or more dwelling units—i.e., the public and common use areas and individual apartment units (all units in buildings with elevators and ground-floor units in buildings without elevators)—be designed and constructed with certain accessible features. (See 24 C.F.R. Part 100, Subpart D.)

VIII. Copyright

Recipients must affix the applicable copyright notices of 17 U.S.C. §§ 401 or 402 and an acknowledgement of U.S. Government sponsorship (including the award number) to any work first produced under federal financial assistance awards.

IX. Debarment and Suspension

Recipients are subject to the non-procurement debarment and suspension regulations implementing Executive Orders (E.O.) 12549 and 12689, which are at 2 C.F.R. Part 180 as adopted by USDHS at 2 C.F.R. Part 3002. These regulations restrict federal financial assistance awards, subawards, and contracts with certain parties that are debarred, suspended, or otherwise excluded from or ineligible for participation in federal assistance programs or activities.

X. Drug-Free Workplace Regulations

Recipients must comply with drug-free workplace requirements in Subpart B (or Subpart C, if the recipient is an individual) of 2 C.F.R. Part 3001, which adopts the Government-wide implementation (2 C.F.R. Part 182) of Sec. 5152-5158 of the Drug-Free Workplace Act of 1988 (41 U.S.C. §§ 8101-8106).

XI. Duplication of Benefits

Any cost allocable to a particular federal financial assistance award provided for in 2 C.F.R. Part 200, Subpart E may not be charged to other federal financial assistance awards to overcome fund deficiencies; to avoid restrictions imposed by federal statutes, regulations, or federal financial assistance award terms and conditions; or for other reasons. However, these prohibitions would not preclude recipients from shifting costs that are allowable under two or more awards in accordance with existing federal statutes, regulations, or the federal financial assistance award terms and conditions may not be charged to other federal financial assistance awards to overcome fund deficiencies; to avoid restrictions imposed by federal statutes, regulations, or federal financial assistance award terms and conditions; or for other reasons.

XII. Education Amendments of 1972 (Equal Opportunity in Education Act) – Title IX

Recipients must comply with the requirements of Title IX of the Education Amendments of 1972, Pub. L. 92-318 (1972) (codified as amended at 20 U.S.C. § 1681 et seq.), which provide that no person in the United States will, on the basis of sex, be excluded from participation in, be denied the benefits of, or be subjected to discrimination under any educational program or activity receiving federal financial assistance. USDHS implementing regulations are codified at 6 C.F.R. Part 17 and 44 C.F.R. Part 19.

XIII. Energy Policy and Conservation Act

Recipients must comply with the requirements of the Energy Policy and Conservation Act, Pub. L. 94- 163 (1975) (codified as amended at 42 U.S.C. § 6201 et seq.), which contain policies relating to energy efficiency that are defined in the state energy conservation plan issued in compliance with this Act.

XIV. Ensuring the Future is Made in All of America by All of America's Workers

Recipients must comply with the "Build America, Buy America" provisions of the Infrastructure Investment and Jobs Act and E.O. 14005 which provide that, as appropriate and to the extent consistent with law, the recipient must use all practicable means within their authority under a federal award to provide a preference for the purchase, acquisition, or use of goods, products, or materials produced in the United States (including but not limited to iron, aluminum, steel, cement, and other manufactured products.)

XV. False Claims Act and Program Fraud Civil Remedies

Recipients must comply with the requirements of the False Claims Act, 31 U.S.C. §§3729- 3733, which prohibit the submission of false or fraudulent claims for payment to the Federal Government. (See 31 U.S.C. §§ 3801-3812, which details the administrative remedies for false claims and statements made.)

XVI. Federal Debt Status

All recipients are required to be non-delinquent in their repayment of any federal debt. Examples of relevant debt include delinquent payroll and other taxes, audit disallowances, and benefit overpayments. (See OMB Circular A-129.)

XVII. Federal Leadership on Reducing Text Messaging while Driving

Recipients are encouraged to adopt and enforce policies that ban text messaging while driving as described in E.O. 13513, including conducting initiatives described in Section 3(a) of the Order when on official government business or when performing any work for or on behalf of the Federal Government.

XVIII. Fly America Act of 1974

Recipients must comply with Preference for U.S. Flag Air Carriers (air carriers holding certificates under 49 U.S.C.) for international air transportation of people and property to the extent that such service is available, in accordance with the International Air Transportation Fair Competitive Practices Act of 1974, 49 U.S.C. § 40118, and the interpretative guidelines issued by the Comptroller General of the United States in the March 31, 1981, amendment to Comptroller General Decision B-138942.

XIX. Hotel and Motel Fire Safety Act of 1990

Recipients must ensure that all conference, meeting, convention, or training space funded in whole or in part with federal funds complies with the fire prevention and control guidelines of Section 6 of the Hotel and Motel Fire Safety Act of 1990, 15 U.S.C. § 2225a.

XX. John S. McCain National Defense Authorization Act of Fiscal Year 2019

Recipients, sub-recipients, and their contractors and subcontractors are subject to the prohibitions described in section 889 of the John S. McCain National Defense Authorization Act for Fiscal Year 2019, Pub. L. No. 115-232 (2018) and 2 C.F.R. §§ 200.216, 200.327, 200.471, and Appendix II to 2 C.F.R. Part 200. Beginning August 13, 2020, the statute – as it applies to USDHS recipients, sub-recipients, and their contractors and subcontractors – prohibits obligating or expending federal award funds on certain telecommunications and video surveillance products

and contracting with certain entities for national security reasons.

XXI. Limited English Proficiency (Civil Rights Act of 1964, Title VI)

Recipients must comply with Title VI of the Civil Rights Act of 1964, (42 U.S.C. § 2000d et seq.) prohibition against discrimination on the basis of national origin, which requires that recipients of federal financial assistance take reasonable steps to provide meaningful access to persons with limited English proficiency (LEP) to their programs and services. For additional assistance and information regarding language access obligations, please refer to the USDHS Recipient Guidance: https://www.dhs.gov/guidance- published-help- department- supported-organizations-provide-meaningful-access-people-limited and additional resources on http://www.lep.gov.

XXII. Lobbying Prohibitions

Recipients must comply with 31 U.S.C. § 1352, which provides that none of the funds provided under a federal financial assistance award may be expended by the recipient to pay any person to influence, or attempt to influence an officer or employee of any agency, a Member of Congress, an officer or employee of Congress, or an employee of a Member of Congress in connection with any federal action related to a federal award or contract, including any extension, continuation, renewal, amendment, or modification.

XXIII. National Environmental Policy Act

Recipients must comply with the requirements of the National Environmental Policy Act of 1969, (NEPA) Pub. L. 91-190 (1970) (codified as amended at 42 U.S.C. § 4321 et seq. and the Council on Environmental Quality (CEQ) Regulations for Implementing the Procedural Provisions of NEPA, which require recipients to use all practicable means within their authority, and consistent with other essential considerations of national policy, to create and maintain conditions under which people and nature can exist in productive harmony and fulfill the social, economic, and other needs of present and future generations of Americans.

XXIV. Nondiscrimination in Matters Pertaining to Faith-Based Organizations

It is USDHS policy to ensure the equal treatment of faith-based organizations in social service programs administered or supported by USDHS or its component agencies, enabling those organizations to participate in providing important social services to beneficiaries. Recipients must comply with the equal treatment policies and requirements contained in 6 C.F.R. Part 19 and other applicable statues, regulations, and guidance governing the participations of faith-based organizations in individual USDHS programs.

XXV. Non-Supplanting Requirement

Recipients receiving federal financial assistance awards made under programs that prohibit supplanting by law must ensure that federal funds do not replace (supplant) funds that have been budgeted for the same purpose through non-federal sources.

XXVI. Notice of Funding Opportunity Requirements

All the instructions, guidance, limitations, and other conditions set forth in the Notice of Funding Opportunity (NOFO) for this program are incorporated here by reference in the award terms and conditions. All recipients must comply with any such requirements set forth in the program NOFO.

XXVII. Patents and Intellectual Property Rights

Recipients are subject to the Bayh-Dole Act, 35 U.S.C. § 200 et seq, unless otherwise provided by law. Recipients are subject to the specific requirements governing the development, reporting, and disposition of rights to inventions and patents resulting from federal financial assistance awards located at 37 C.F.R. Part 401 and the standard patent rights clause located at 37 C.F.R. § 401.14.

XXVIII. Procurement of Recovered Materials

States, political subdivisions of states, and their contractors must comply with Section 6002 of the Solid Waste Disposal Act, Pub. L. 89-272 (1965), (codified as amended by the Resource Conservation and Recovery Act, 42 U.S.C. § 6962.) The requirements of Section 6002 include procuring only items designated in guidelines of the Environmental Protection Agency (EPA) at 40 C.F.R. Part 247 that contain the highest percentage of recovered materials practicable, consistent with maintaining a satisfactory level of competition.

XXIX. Rehabilitation Act of 1973

Recipients must comply with the requirements of Section 504 of the Rehabilitation Act of 1973, Pub. L. 93-112 (1973), (codified as amended at 29 U.S.C. § 794,) which provides that no otherwise qualified handicapped individuals in the United States will, solely by reason of the handicap, be excluded from participation in, be denied the benefits of, or be subjected to discrimination under any program or activity receiving federal financial assistance.

XXX. Reporting of Matters Related to Recipient Integrity and Performance General Reporting Requirements.

If the total value of any currently active grants, cooperative agreements, and procurement contracts from all federal awarding agencies exceeds $10,000,000 for any period of time during the period of performance of this federal award, then the recipients must comply with the requirements set forth in the government-wide Award Term and Condition for Recipient Integrity and Performance Matters located at 2 C.F.R. Part 200, Appendix XII, the full text of which is incorporated here by reference in the award terms and conditions.

XXXI. Reporting Subawards and Executive Compensation Reporting of first tier subawards.

Recipients are required to comply with the requirements set forth in the government-wide award term on Reporting Subawards and Executive Compensation located at 2 C.F.R. Part 170, Appendix A, the full text of which is incorporated here by reference in the award terms and conditions.

XXXII. SAFECOM

Recipients receiving federal financial assistance awards made under programs that provide emergency communication equipment and its related activities must comply with the SAFECOM Guidance for Emergency Communication Grants, including provisions on technical standards that ensure and enhance interoperable communications.

XXXIII. Terrorist Financing

Recipients must comply with E.O. 13224 and U.S. laws that prohibit transactions with, and the provisions of resources and support to, individuals and organizations associated with terrorism. Recipients are legally responsible to ensure compliance with the Order and laws.

XXXIV. Trafficking Victims Protection Act of 2000 (TVPA) Trafficking in Persons.

Recipients must comply with the requirements of the government-wide financial assistance award term which implements Section 106 (g) of the Trafficking Victims Protection Act of 2000 (TVPA), codified as amended at 22 U.S.C. § 7104. The award term is located at 2 C.F.R. § 175.15,

the full text of which is incorporated here by reference.

XXXV. Universal Identifier and System of Award Management

Requirements for System for Award Management and Unique Entity Identifier Recipients are required to comply with the requirements set forth in the government-wide financial assistance award term regarding the System for Award Management and Universal Identifier Requirements located at 2 C.F.R. Part 25, Appendix A, the full text of which is incorporated here by reference.

XXXVI. USA PATRIOT Act of 2001

Recipients must comply with requirements of Section 817 of the Uniting and Strengthening America by Providing Appropriate Tools Required to Intercept and Obstruct Terrorism Act of 2001 (USA PATRIOT Act), which amends 18 U.S.C. §§ 175–175c.

XXXVII. Use of USDHS Seal, Logo and Flags

Recipients must obtain permission from their USDHS FAO prior to using the USDHS seal(s), logos, crests or reproductions of flags or likenesses of USDHS agency officials, including use of the United States Coast Guard seal, logo, crests or reproductions of flags or likenesses of Coast Guard officials.

XXXVIII. Whistleblower Protection Act

Recipients must comply with the statutory requirements for whistleblower protections (if applicable) at 10 U.S.C § 2409, 41 U.S.C. § 4712, and 10 U.S.C. § 2324, 41 U.S.C. §§ 4304 and 4310.

The remainder of this page is intentionally left blank.

ATTACHMENT 2
Reimbursement Checklist

DHSEM reserves the right to update this check list throughout the life of the grant to ensure compliance with applicable federal and state rules and regulations. ***Please only check the categories that apply to the reimbursement you are currently requesting.***

EQUIPMENT

- ☐ Have all invoices been included?
- ☐ Has AEL # been identified for each purchase?
- ☐ If service/warranty expenses are listed, are they only for the performance period of the grant?
- ☐ Has proof of payment been included? (e.g., canceled check, Electronic Funds Transfer (EFT) confirmation, or P-Card back up documentation which will include receipt with vendor, copy of credit card statement showing expense charged, and payment to credit card Company for that statement)

CONSULTANTS/CONTRACTORS

- ☐ Does the amount billed by consultant add up correctly?
- ☐ Has all appropriate documentation to denote hours worked been properly signed?
- ☐ Have copies of all planning materials and work product (e.g., meeting documents, copies of plans) been included? (If a meeting was held by recipient or contractor/consultant of recipient, an agenda and signup sheet with meeting date must be included).
- ☐ Has the invoice from consultant/contractor been included?
- ☐ Has proof of payment been included? (e.g., canceled check, Electronic Funds Transfer (EFT) confirmation, or P-Card back up documentation which will include receipt with vendor, copy of credit card statement showing expense charged, and payment to credit card Company for that statement).

SALARY POSITIONS (Note: this applies to positions billed under M&A)

- ☐ Have the following been provided: signed time sheet by employee and supervisor and proof that employee was paid for time worked (statement of earnings, copy of payroll check or payroll register)?
- ☐ Has a time period summary sheet been included for total claimed amount?
- ☐ Has a general ledger payroll report been included for total claimed amount? Ensure this report includes both employee and employer payroll information (i.e., benefits/contributions).
- ☐ Does the back-up documentation include a copy of the check stub per employee for the time period covered?
- ☐ Does the back-up documentation provided match the time period for which reimbursement is being requested?

OTHER:

- ☐ If EHP form needed – has copy of it and approval from USDHS/FEMA been included?

MATCHING FUNDS (IF APPLICABLE)

- ☐ Contributions are from Non-Federal funding sources.
- ☐ Contributions are from cash or in-kind contributions which may include training investments.
- ☐ Contributions are not from salary, overtime, or other operational costs unrelated to training.

This page is intentionally left blank.

ATTACHMENT 3
Glossary and Definitions

Applicant: When an entity applies for PA funding, it is the **Applicant**. Once the Applicant receives funding, it is either the **recipient, pass-through entity,** or a **sub-recipient**.

Authorized Equipment List (AEL): The Authorized Equipment List (AEL) is a list of approved equipment types allowed under FEMA's preparedness grant programs.

Backfill: The act of filling a position left by another employee who has been moved to another role.

Cost Match: Recipient or sub-recipient contribution. This can be cash (hard match) or third party in-kind (soft match). 2 C.F.R. 200.306.

Cost Sharing or Matching: The portion of project costs not paid by federal funds or contributions (unless otherwise authorized by federal statute). 2 C.F.R. 200.1 Cost sharing or matching.

Declared fire: An uncontrolled fire or fire complex, threatening such destruction as would constitute a major disaster, which the FEMA Regional Administrator has approved in response to a state's request for a fire management assistance declaration and in accordance with the criteria listed in 44 C.F.R. 204.21. Fire Management Assistance Declaration Criteria.

Disallowed costs: Those charges to a federal award that the federal awarding agency or pass-through entity determines to be unallowable, in accordance with the applicable federal statutes, regulations, or the terms and conditions of the federal award. 2 C.F.R. 200.1 Disallowed costs.

Demobilization: The process and procedures for deactivating, disassembling, and transporting back to their point of origin all resources that had been provided to respond to and support a declared fire.

Disaster: An emergency condition affecting all or part the state, overwhelming local resources, in which there is likely to be a significant recovery period. The Governor may request a Robert T. Stafford Act (Stafford Act) Disaster Declaration through FEMA, asking for the Public Assistance Program, Fire Management Assistance Program, Individual Assistance Program and Mitigation based upon known and estimated damage assessment data.

Disaster Recovery Reform Act of 2018 (DRRA): The DRRA represents the most comprehensive Emergency Management reform since the Post-Katrina Emergency Management Reform Act in 2006. It includes a larger and more reliable funding stream for pre-disaster mitigation, expanded assistance for individuals and households, and support for states, localities, tribes, and territories (SLTTs) to develop their own emergency management capabilities.

Emergency: A condition in which local and state emergency response agencies are overwhelmed by an incident to the point that federal assistance is needed. Unlike a disaster, an emergency does not have a recovery phase. The Governor may request a Stafford Act Emergency Declaration through FEMA, asking for the Public Assistance Program and/or Fire Management Assistance Grant.

Emergency Work: Work which must be done before, during and immediately after a disaster event to save lives and to protect improved property and public health and safety or to avert or lessen the threat of a major disaster. The FEMA Public Assistance emergency work Categories are:

- Category A (Debris Removal)
- Category B (Emergency Protective Measures)

Equipment: Tangible personal property (including information technology systems) having a useful life of more than one year and a per-unit acquisition cost which equals or exceeds the lesser of the capitalization level established by the non-federal entity for financial statement purposes, or $5,000. 2 C.F.R. 200.1 Equipment.

*Expenditures***:** Charges made by a non-federal entity to a project or program for which a federal award was received. 2 C.F.R. 200.1 Expenditures.

Federal Award: The federal financial assistance that a recipient receives directly from a federal awarding agency or indirectly from a pass-through entity. 2 C.F.R. 200.1 Federal award.

Federal Emergency Management Agency (FEMA): The federal agency responsible for coordinating disaster recovery efforts in partnership with state, local, and tribal governments.

Federal Share: The portion of the federal award costs that are paid using federal funds. 2 C.F.R. 200.1 Federal share.

FEMA/State Agreement: A formal, legal document between FEMA and the state or a tribal government giving the understandings, commitments, terms, conditions, and timelines for assistance resulting from a federal disaster, emergency, or fire declaration, declared by the President.

Governor's Authorized Representative (GAR): The person designated by the Governor to execute all necessary documents for disaster assistance programs on behalf of the state and local grant recipients. The GAR is responsible for state compliance with the FEMA/State Agreement. The GAR may also be designated as the State Coordinating Officer.

Hazard Mitigation: Mitigation is the effort to reduce loss of life and property by lessening the impact of disasters.

Hazard Mitigation (Sections 404 and 406): Section 406 Mitigation measures are specific to the mechanism of the declared disaster and are an integral part of the reconstructed work on a facility or will protect or benefit the repaired portion of the facility. These are different from mitigation measures that are considered for eligibility under the Hazard Mitigation Grant Program (HMGP) of Section 404 of the Stafford Act. In the HMGP program, measures are proposed that may involve facilities other than those damaged by the disaster, new facilities, or even non-structural measures such as the development of floodplain management regulations.

Incident Period: The time interval during which the declared disaster occurs. The Regional Administrator, in consultation with the Governor's Authorized Representative and the Principal Advisor will establish the incident period. Generally, costs must be incurred during the incident period to be considered eligible.

The declaration designates the incident period. The incident period is the span of time during which the federally declared incident occurs. This period varies in length, depending on the incident.

Improved Project: When performing restoration work on a damaged facility, a sub-recipient may use the opportunity to make improvements to the facility. Projects that incorporate such improvements are improved projects. The improved facility must have the same function and at least the equivalent capacity as that of the pre-disaster facility. Federal funding for improved projects is limited to the lesser of the following: the federal share of the approved estimated costs to restore the damaged facility to its pre-disaster design and function or the federal share of the actual cost of completing the improved project. The sub-recipient must obtain FEMA approval, via the NMDHSEM, for an improved project prior to

construction.

Indirect Costs: Costs a recipient or sub-recipient incurs for a common or joint purpose benefitting more than one cost objective that are not readily assignable to the cost objectives specifically benefited.

Joint Field Office (JFO): A temporary facility established in or near a declared disaster area to serve as the field headquarters for FEMA, other federal and state recovery personnel, and serve as the focal point for federal disaster operations, direction, coordination, and information.

Large Project: An approved project estimated to cost the same as or more than the large project threshold amount. The large project threshold is a dollar amount adjusted annually to reflect changes in the Consumer Price Index for all urban consumers. The large project threshold amount, applicable to all projects, is the amount in effect on the declaration date of the disaster, regardless of when project approval is made or when the work is performed.

Management Costs: Management costs are any indirect costs, any direct administrative costs, and any other administrative expenses associated with the administration of HMA awards and subawards. Management costs are provided under HMGP, HMGP Post Fire, BRIC and FMA. For the Hazard Mitigation Grant Program (HMGP) and Hazard Mitigation Grant Program Post Fire (HMGP Post Fire), recipients will be reimbursed no more than 15% of the total amount of the award, of which not more than 10% may be used by the recipient and 5% by the subrecipient. Under HMGP and HMGP Post Fire, recipients' Administrative Plans must include procedures for monitoring and reporting on subrecipient management costs before receiving funding for management costs. For Building Resilient Infrastructure and Communities (BRIC) and Flood Mitigation Assistance (FMA), recipients may apply for a maximum of 10% of the total funds requested in their application cost estimate (federal and non-federal shares) for management costs to support the sub-applications included as part of their award. Subapplicants for BRIC and FMA may apply for a maximum of 5% of the total funds requested in a sub-application for management costs. Additional information is available in FEMA Policy #104-11-1, Hazard Mitigation Grant Program Management Costs (Interim).

Pass-through Entity: A non-federal entity that provides a subaward to a sub-recipient to carry out part of a federal program. 2 C.F.R. 200.1 Pass through entity (PTE).

Performance Period for Hazard Mitigation Assistance: The period of time stipulated in the Sub-recipient Grant Agreement, as amended, during which the sub-recipient must finish the approved work. Projects completed after the active Period of Performance deadline will be considered ineligible.

Quarterly Financial Progress Report: The information in this report is used by NMDHSEM to monitor sub-recipient cash flow, performance, and project implementation to ensure proper use of federal funds.

Recipient: Formally referred to as the grantee or sub-grantee or applicant. Federally Recognized Indian Tribal Governments may also be Recipients if they so desire and if they meet FEMA requirements.

Recovery Officer: Aids in the administration of disaster recovery grant programs for statewide disasters and emergencies. Coordinates and co-administers disaster recovery grant programs, ensuring that they are implemented and carried out according to state and federal program requirements.

Recovery Unit: This is the unit within the NMDHSEM Response and Recovery Bureau designated as responsible for the programmatic administration of the FEMA PA and FMAG Programs.

Recovery Unit Manager: Responsible for administering and supervising staff responsible for federal and state disaster recovery programs and serves as the Deputy State Coordinating Officer (SCO) for

emergencies or major disaster declarations.

Response & Recovery Bureau Chief: Responsible for supervising staff responsible for federal and state disaster recovery programs and staff that provides operational response capabilities to support the citizens of New Mexico. This position also serves as State Coordinating Officer (SCO) for emergencies or major disaster declarations.

Request for Approval Form: Used by sub-recipient to request approval from NMDHSEM to expend funds for previously identified and approved projects. Approval must be received prior to expenditure.

Small Project: An approved project estimated to cost less than the large project threshold amount.

State Coordinating Officer (SCO): The person designated by the Governor to coordinate state and local disaster assistance efforts with those of the federal government. The GAR may also be the SCO. The Governor will name the GAR and the SCO in the FEMA/State Agreement.

Sub-recipient: Formally referred to as the sub-grantee or applicant, is a state agency, local government, tribal government, other legal governmental entity, or a private non-profit (PNP) organization that receives a sub-grant award and which is accountable to the state for the use of the funds provided. The FEMA reserves the final decision as to sub-recipient eligibility.

Supplanting: When a state or unit of local government reduces state or local funds for an activity specifically because federal funds are available (or expected to be available) to fund that same activity. When supplanting is not permitted, federal funds must be used to **supplement** existing state or local funds for program activities and may not replace state or local funds that have been appropriated or allocated for the same purpose. Additionally, federal funding may not replace state or local funding that is required by law. If a question of supplanting arises, the sub-recipient or grantee will be required to substantiate that the reduction in non-federal resources occurred for reasons other than the receipt or expected receipt of federal funds. US Department of Justice Office of Justice Programs, Grants 101.

The remainder of this page is intentionally left blank.

ATTACHMENT 4
Acronyms

AEL: Authorized Equipment List
AGAR: Alternate Governor's Authorized Representative
ASB: Administrative Services Bureau of NMDHSEM
CFDA: Catalog of Federal Domestic Assistance
DAC: Direct Administrative Costs
DOT: Department of Transportation
DPS: Department of Public Safety
DRRA: Disaster Recovery Refo1m Act of 2018
DSCO: Deputy State Coordinating Officer
DSIBD: Deputy State Infrastructure Branch Director
DSPAGS: Deputy State Public Assistance Group Supervisor
EMAC: Emergency Management Assistance Compact
EMMIE: Emergency Management Mission Integrated Environment
EMNRD: Energy, Minerals and Natural Resources Department
FEMA: Federal Emergency Management Agency
FFATA- Federal Funding Accountability and Transparency Act
FMAG - Fire Management Assistance Grant
GAR: Governor's Authorized Representative
IMAS: Intrastate Mutual Aid System
INF: Immediate Needs Funding
IOF: Initial Operating Facility
JFO: Joint Field Office
NSPO: Net Small Project Overrun
NMDHSEM: New Mexico Department of Homeland Security and Emergency Management
ONA: Other Needs Assistance
OMB: Office of Management and Budget
PA: Public Assistance
PAGS: Public Assistance Group Supervisor
PAPPG: Public Assistance Program and Policy Guide
PDA: Preliminary Damage Assessment
PDMG: Program Delivery Manager
PIO: Public Information Officer
PNP: Private Non-Profit
POP: Period of Performance
PW: Project Worksheet
R&R: Response & Recovery Bureau
REC: Record of Environmental Consideration
RO: Recovery Officer
RP A - Request for Public Assistance
SCO: State Coordinating Officer
SOW: Scope of Work
SHARE: New Mexico Statewide Human Resources, Accounting, and Management Reporting System

SIBD: State Infrastructure Branch Director
SPAGS: State Public Assistance Group Supervisor
SPAO: State Public Assistance Officer
USDHS: United States Department of Homeland Security
USFS: US Forest Service
VFO: Virtual Field Office

The remainder of this page is intentionally left blank.

City of Santa Fe New Mexico

Finance Department

Project Ledger Request Form

Date of Request: 09/11/2024 REC 9.27/24

Project Title: Arroyo de los Pinos BioInfiltration Basins

Project Type: ☒ CIP ☒ Grant ☐ Internal tracking

Project Id: OEM2523102
Grant Id: F2514 &S2536
Financial Analyst: Erika Lujan
PAL/CT (Finance Use Only)

Department: General Government/OEM

Project Manager: Kyle Morgan Ext: 629-2539

Project Date Range: 07/2024-01/25/2027

Create Fixed Asset ☐

☒ Multi-Funding (complete all funding sources, should equal 100%)

Funding Source: FEMA Sub-Grant No. DR-5430-0012-NM % of Funding: 75% -$277,081 (277080.50)

MUNIS Org:2310411/2212850 MUNIS Object: 490580 Awarded Amount: $263,222/$13,859

Funding Source: Department of Finance and Administration % of Funding: 25%
(87740.41)

MUNIS Org: 2310411 MUNIS Object: 490210 Awarded Amount: $87,741

Expense String Phase

A project must have at least one phase identified, this can be used as an additional level of tracking, for example, CIP - design, start-up cost, etc. For grants can be used as reimbursable types, such as transportation, salaries.

(You can create more than one phase and you can default MUNIS Orgs and Objects, optional)

Phase: Design MUNIS Org: 2310411 MUNIS Object: 572960
Phase: Project Management MUNIS Org: 2212850 MUNIS Object: 510300
Phase: _____ MUNIS Org: _____ MUNIS Object: _____

Grants Only (list all grants if applicable)

Grantor Name: FEMA-DR54300012NM Awarded Amount: 277080.50

AR Charge Code: 2212850.490580 ☐ Grant funds multiple projects
(Complete a form for each project)

Grantor Id: _____ Federal CFDA (if applicable) 97.039

Grantor Name: DFA MATCH GRANT-MG25-085 Awarded Amount: 87740.41

AR Charge Code: 2310411.490210 ☐ Grant funds multiple projects
(Complete a form for each project)

Grantor Id: _____ Federal CFDA (if applicable) N/A

(If grants please provide all grant award documents with form) ☒ Attached to Grant

HMGP_2023_ADLP_Council_Packet_2024-10-23

Final Audit Report 2024-11-01

Created:	2024-10-30
By:	Justin Gonzales (jmgonzales@santafenm.gov)
Status:	Signed
Transaction ID:	CBJCHBCAABAAD5PADKaUC_C0nFyviJUC1JSzl4Y7Iara

"HMGP_2023_ADLP_Council_Packet_2024-10-23" History

Document created by Justin Gonzales (jmgonzales@santafenm.gov)
2024-10-30 - 4:41:08 PM GMT- IP address: 63.232.20.2

Document emailed to BRIAN WILLIAMS (bgwilliams@santafenm.gov) for signature
2024-10-30 - 4:46:13 PM GMT

Email viewed by BRIAN WILLIAMS (bgwilliams@santafenm.gov)
2024-10-30 - 5:01:35 PM GMT- IP address: 104.47.65.254

Document e-signed by BRIAN WILLIAMS (bgwilliams@santafenm.gov)
Signature Date: 2024-10-30 - 5:02:04 PM GMT - Time Source: server- IP address: 63.232.20.2

Document emailed to rawheeler@santafenm.gov for signature
2024-10-30 - 5:02:07 PM GMT

Email viewed by rawheeler@santafenm.gov
2024-10-30 - 5:03:00 PM GMT- IP address: 104.47.64.254

Signer rawheeler@santafenm.gov entered name at signing as RW
2024-10-30 - 5:03:24 PM GMT- IP address: 63.232.20.2

Document e-signed by RW (rawheeler@santafenm.gov)
Signature Date: 2024-10-30 - 5:03:26 PM GMT - Time Source: server- IP address: 63.232.20.2

Document emailed to HENRI HAMMOND-PAUL (hmhammondpaul@santafenm.gov) for signature
2024-10-30 - 5:03:30 PM GMT

Email viewed by HENRI HAMMOND-PAUL (hmhammondpaul@santafenm.gov)
2024-10-31 - 3:34:43 PM GMT- IP address: 104.47.64.254

Document e-signed by HENRI HAMMOND-PAUL (hmhammondpaul@santafenm.gov)
Signature Date: 2024-10-31 - 3:35:07 PM GMT - Time Source: server- IP address: 63.232.20.2

Document emailed to mtbonifer@santafenm.gov for signature
2024-10-31 - 3:35:09 PM GMT

Email viewed by mtbonifer@santafenm.gov
2024-10-31 - 4:10:39 PM GMT- IP address: 104.47.64.254

Signer mtbonifer@santafenm.gov entered name at signing as Matthew Bonifer
2024-10-31 - 4:34:13 PM GMT- IP address: 63.232.20.2

Document e-signed by Matthew Bonifer (mtbonifer@santafenm.gov)
Signature Date: 2024-10-31 - 4:34:15 PM GMT - Time Source: server- IP address: 63.232.20.2

Document emailed to ajhopkins@santafenm.gov ajhopkins@santafenm.gov (ajhopkins@santafenm.gov) for signature
2024-10-31 - 4:34:18 PM GMT

Email viewed by ajhopkins@santafenm.gov ajhopkins@santafenm.gov (ajhopkins@santafenm.gov)
2024-10-31 - 4:37:01 PM GMT- IP address: 104.47.65.254

Document e-signed by ajhopkins@santafenm.gov ajhopkins@santafenm.gov (ajhopkins@santafenm.gov)
Signature Date: 2024-10-31 - 4:40:10 PM GMT - Time Source: server- IP address: 63.232.20.2

Document emailed to EMILY OSTER (ekoster@santafenm.gov) for signature
2024-10-31 - 4:40:12 PM GMT

Email viewed by EMILY OSTER (ekoster@santafenm.gov)
2024-11-01 - 5:12:14 PM GMT- IP address: 104.47.65.254

Document e-signed by EMILY OSTER (ekoster@santafenm.gov)
Signature Date: 2024-11-01 - 5:22:00 PM GMT - Time Source: server- IP address: 63.232.20.2

Document emailed to JOHN BLAIR (jwblair@santafenm.gov) for signature
2024-11-01 - 5:22:04 PM GMT

Email viewed by JOHN BLAIR (jwblair@santafenm.gov)
2024-11-01 - 6:43:55 PM GMT- IP address: 104.47.65.254

Signer JOHN BLAIR (jwblair@santafenm.gov) entered name at signing as John Blair
2024-11-01 - 6:44:18 PM GMT- IP address: 63.232.20.2

Document e-signed by John Blair (jwblair@santafenm.gov)
Signature Date: 2024-11-01 - 6:44:20 PM GMT - Time Source: server- IP address: 63.232.20.2

Agreement completed.

2024-11-01 - 6:44:20 PM GMT

CITY OF SANTA FE

Date: October 30, 2024

To: Governing Body

Via: Regina Wheeler, Public Works Director RW (Oct 30, 2024 11:03 MDT)
Henri Hammond-Paul, Community Health and Safety Director HENRI HAMMOND-PAUL (Oct 31, 2024 09:35 MDT)

From: **Brian Williams, Office of Emergency Management Director** BRIAN WILLIAMS (Oct 30, 2024 11:02 MDT)

Subject: **Hazard Mitigation Grant Program (HMGP) Grant Approval – Arroyo De Los Pinos Bio-Infiltration Basins Design**

ITEM AND ISSUE:
Request Approval of the 2023 Hazardous Mitigation Grant Program (HMGP) Sub-Grant Agreement DR-5430-0012-NM in the total amount of $364,820.91 with the New Mexico Department of Homeland Security and Emergency Management for Bio-Infiltration Basin Design at Marc Brandt Park. Brian Williams, Director Office of Emergency Management, bgwilliams@santafenm.gov.

Request Approval of a New Mexico Match Fund Grant 24-ZI5044-MG25-085 in the total amount of $87,740.41 with the New Mexico Department of Finance and Administration for Federal Grant Match Funding. Brian Williams, Director Office of Emergency Management, bgwilliams@santafenm.gov.

Request Approval of a FY25 BAR to Budget $350,961.66 in Awarded Federal Grant Funds to Stormwater WIP Design, $13,859.25 in Awarded Federal Grant Funds for Subrecipient Management Costs into Emergency Management Professional Contracts, and $87,740.41 in Awarded State Grant Funds to Stormwater WIP Design.

Action Requested: Grant Approval (2), BAR Approval

BACKGROUND AND SUMMARY:
The City of Santa Fe applied for this reimbursable grant through the United States Department of Homeland Security and Emergency Management (DHSEM) and the Federal Emergency Management Agency (FEMA). The Hazard Mitigation Grant Program (HMGP) supports states, local communities, tribes and territories as they undertake hazard mitigation projects, reducing the risks they face from disasters and natural hazards.

The Office of Emergency Management and the Parks and Open Space Division collaborated to secure this grant for conducting an engineering drainage analysis, green stormwater infrastructure and landscape design for bio-infiltration basins along the Siringo Rd corridor at Marc Brandt Park. The infiltration basins will provide infiltration, passive reuse and water conservation resulting in flood mitigation and a high-quality public open space for low-income communities. In addition, these basins will provide a "first flush" primary treatment of stormwater and decrease pollutant loads at the point of discharge into the Arroyo de Los Pinos.

The Office of Emergency Management applied for matching funds to cover the local share through the New Mexico Department of Finance and Administration (DFA) after receiving the federal grant award.

This Hazard Mitigation Grant Program grant provides a 75% federal share of $350,960.66 and requires a 25% local share of $87,740.41 which will be provided through the New Mexico Match Fund.

The HGMP grant amount also includes a 100% federally funded Subrecipient Management Costs $13,859.25 to assist with capacity in managing the grant.

The Office of Emergency Management will manage these grants, while the Parks and Open Space Division will manage the project.

The term of the grant ends on January 25, 2027.

PROCUREMENT METHOD:
Not applicable. Grant approval only.

Supporting Information:

CONTRACT NUMBER:
The FY25 Project ledger number is OEM2523102

SOURCE/REVENUE: ☐Expense ☒Revenue

The Federal funding source (not including sub-recipient management costs) is:
Fund Name/Number: Stormwater/Fund 231
Munis Org Name/Number: Stormwater/2310411
Munis Object Name/Number: Fed Grant (FEMA)/490580

The Federal funding source (sub-recipient management costs only) is:
Fund Name/Number: Emergency Services/Fund 221
Munis Org Name/Number: Emergency Management/2212850
Munis Object Name/Number: Fed Grant (FEMA)/490580

The Local funding source is:
Fund Name/Number: Stormwater/Fund 231
Munis Org Name/Number: Stormwater/2310411
Munis Object Name/Number: State Grant (DFA)/490210

List grant award number*: DR-540-0012-NM (Federal) / 24-ZI5044- MG25-085 (State)*

Grant Manager / Accounting Officer Approval: Matthew Bonifer Matthew Bonifer (Oct 31, 2024 10:34 MDT) **Date:** 10/31/2024
Comment/Exceptions: _____

Project Ledger #: OEM2523102

Budget Officer Approval: Andy Hopkins **Date:** 10/31/2024
Comment/Exceptions: _____

CAPITAL ASSET (will this procurement result in a tangible item that costs more than $5,000?):

☐Yes | ☒ No

 # (if known): _____

Repair or Replacement of Existing Equipment:

☐Yes | ☒ No
If yes -> ☐Repair | ☐ Replacement

Please explain: _____

Capital Project:
(New and improvement projects that are going to cost $10,000 or more)
☐ Yes | ☒ No

Project Ledger #: OEM2523102

Anticipated length of project: _____

Asset Manager Approval: _____ **Date:** _____
Comment/Exceptions: _____

Department Approvals:
IT Components: ☐ **Yes** | ☒ **No**
Vehicles: ☐ **Yes** | ☒ **No**
Facilities, Furniture, Fixtures, Equipment: ☐ **Yes** | ☒ **No**

Approval: _____ **Title:** _____ **Date**: _____
Approval: _____ **Title:** _____ **Date**: _____
Comment & Exceptions: _____

Department Contract Administrator Contact Info:
Justin Gonzales, jmgonzales@santafenm.gov.

ATTACHMENTS:

1. Budget Amendment Resolution
2. NM Match Fund Grant Agreement
3. Sub-Recipient Grant Agreement (Federal)
4. Project Ledger

Log # *{Finance use only}*:	
Journal # *{Finance use only}*:	

City of Santa Fe, New Mexico
BUDGET AMENDMENT RESOLUTION (BAR)

DEPARTMENT / DIVISION NAME	DATE
Public Works / Stormwater CIP	9/11/2024

ITEM DESCRIPTION	ORG	OBJECT	PROJECT	INCREASE	DECREASE
EXPENDITURES				*{enter as positive #}*	*{enter as negative #}*
WIP DESIGN - Arroyo de Los Pinos Bioinfiltration Basins	2310411	572960	OEM2523102-Design	350,963	
PROFESSIONAL CONTRACTS	2212850	510300	OEM2523102-ProfContracts	13,859	
REVENUES				*{enter as negative #}*	*{enter as positive #}*
FEMA - Arroyo de Los Pinos Bioinfiltration Basins	2310411	490580	OEM2523102	(263,222)	
DFA - Arroyo de Lost Pinos Bioinfiltration Basins	2310411	490210	OEM2523102	(87,741)	
Federal Emergency Management Agency (GRANT)	2212850	490580	OEM2523102	(13,859)	
				$ -	$ -

JUSTIFICATION: *(use additional page if needed)*
--Attach supporting documentation/memo

FY 25 budget increase for subrecipient grant award: DR-5430-0012-NM: FEMA Hazard Mitigation Grant for Arroyo de Los Pinos Bioinfiltration Basins at the Arroyo de Los Pinos in the amount of $263,222 for Design and $13,859 for Management Costs.

Expires 01/25/2027

FY 25 budget increase for Department of Finance and Administration State Matching Grant in the amount of $87,741 to cover 25% local match requirement of FEMA Grant (DR-5430-0012-NM). Expires 06/25/2027.

{Complete section below if BAR results in a net change to ANY Fund}

Fund(s) Affected	Fund Balance Increase/(Decrease)
TOTAL:	**0**

Kyle Morgan — 9/11/2024
Prepared By *{print name}* — Date

Division Director Signature *{optional}* — Date

HENRI HAMMOND-PAUL (Oct 31, 2024 09:35 MDT) — 10/31/2024
Department Director Signature — Date

{Use this form for Finance Committee/ City Council agenda items ONLY}

CITY COUNCIL APPROVAL

City Council Approval Date:

Agenda Item #:

Andy Hopkins — 10/31/2024
Budget Officer — Date

Finance Director *{≤ $5,000}* — Date

City Manager *{≤ $60,000}* — Date

New Mexico Department of Finance and Administration

Item #24-0636

407 Galisteo St,
Santa Fe, NM 87501
(505) 827-4985

Governor Michelle Lujan Grisham
Cabinet Secretary Wayne Propst

Infrastructure Planning & Development Division
Wesley Billingsley, Division Director

RECIPIENT:

City of Santa Fe

APPROPRIATION NUMBER:	ALLOCATION AMOUNT:	REVERSION DATE:
24-ZI5044- MG25-085	$87,740.41	Six (6) months after the end date of the associated federal grant's period of performance.

ALLOCATION PURPOSE

$87,740.41 for costs to meet cost sharing requirements City of Santa Fe – Arroyo De Los Pinos Bio-Infiltration basins Advance Assistance. Funds unexpended by the date specified in the period of performance terms of your federal grant agreement, will be reverted to the State of New Mexico within 6 months of the federal grant closeout.

ALLOCATION DISBURSEMENT

100% of the allocated funds will be disbursed upon execution of the agreement. The Allocation Recipient agrees to submit Annual reports using Exhibit A, Match Fund Annual Report Form, providing updates on the status of the expenditures from this appropriation. The Recipient also understands and agrees to use the allocated funds in accordance with the New Mexico Match Fund Policy.

CERTIFICATION

I hereby certify that City of Santa Fe

1. Will only use the allocated funds to carry out and/or perform activities described in allocation language.
2. Will submit annual reporting through the Match Fund Annual Report link.
3. Will adhere to the Match Fund policy.
4. Will adhere to the provisions of Attachment A- Special Provisions

John Blair
John Blair (Nov 1, 2024 12:44 MDT)

City Manager, City of Santa Fe — 11/01/2024 Date

Emily K. Oster

Finance Director, City of Santa Fe — 11/01/2024 Date

PUBLICITY

Any Publicity regarding this agreement must not be released without prior written approval from the DFA. For purposes of this agreement, "Publicity" means notices, informational pamphlets, press releases, email response, research, reports, signs, and similar public notices prepared by or for the Subrecipient or jointly with others. The Recipient shall not issue, without consent of the DFA, any press release, or make any public announcement with respect to this agreement. In the performance of responsibilities under this agreement, the Recipient agrees to obtain approval of the DFA in advance with respect to all Public Relations, all communications with media, or all communications with any other member of the public with respect to this agreement, except to acknowledge that an agreement does exist. For purposes of this agreement, "Public Relations" includes community relations and means those activities dedicated to maintaining the image of the DFA or maintaining or promoting understanding and favorable relations with the community or public at large or any segment of the public. For violations of this provision, as determined solely by the DFA, the DFA reserves the right to terminate this agreement.

New Mexico
Department *of* Finance
and Administration

407 Galisteo St,
Santa Fe, NM 87501
(505) 827-4985

Governor Michelle Lujan Grisham
Cabinet Secretary Wayne Propst

Infrastructure Planning & Development Division
Wesley Billingsley, Division Director

APPROVAL

In accordance with the authority conferred on the Department of Finance & Administration by the statute appropriating these funds, I hereby approve this certification for MG25-085 in the amount of $87,740.41.

Wesley Billingsley
Director, Infrastructure Planning & Development Division

Date

New Mexico
Department *of* Finance
and Administration

407 Galisteo St,
Santa Fe, NM 87501
(505) 827-4985

Governor Michelle Lujan Grisham
Cabinet Secretary Wayne Propst

Infrastructure Planning & Development Division
Wesley Billingsley, Division Director

OPTIONAL ATTACHMENT A
SPECIAL CONDITIONS

The grant award requires grantees' accounting methods and procedures, including their internal control framework, to be scrutinized, so as to safeguard State appropriations and assets acquired with such appropriations. This Matching Grant Special Grant Condition(s) **Attachment A** is necessary pursuant to Executive Order 2013-006 (2.A.2.a-c, if applicable), due to the Grantees' material weaknesses, significant deficiencies, or findings that raised concerns as to the ability to expend grant funds in accordance with applicable law in the organization's FY23 audit. The Special Conditions identified below apply to the authorized agent, City of Santa Fe.

Procurement - All purchases or contracts the Grantee enters that shall use funding from the Department capital appropriations grant must be approved by the Department prior to the initiation of implementing purchasing documents. The Grantee shall receive such prior approval via official correspondence from the Department, which may be through letter or email. The Grantee shall submit the following to the Department in pursuit of prior approval: purchasing policies and procedures, CFO certification, documentation of management and program approval, policies and procedures governing purchasing and contracting, a copy of the current procurement and contracting policies, and documentation regarding informing staff responsible for purchasing and contracting on such policies and procedures.

Cash Management – policies and procedures on cash management of federal funds. Provide procedures used to draw and disburse federal funds. Provide procedures to reconcile draw amounts, deposits and disbursements; and to prepare federal cash reporting documents to ensure compliance with federal regulations.

The City of Santa was required to and has provided sufficient documentation regarding procurement and cash management as referenced in the City of Santa Fe's FY23 Audit file. Therefore, the criteria to enter into this agreement have been met.

_____ _____

Wesley Billingsley
Director, Infrastructure Planning & Development Division

Date

New Mexico
Department *of* Finance
and Administration

407 Galisteo St,
Santa Fe, NM 87501
(505) 827-4985

Governor Michelle Lujan Grisham
Cabinet Secretary Wayne Propst

Infrastructure Planning & Development Division
Wesley Billingsley, Division Director

Exhibit A

Appropriation Recipient: _____

Appropriation Number: _____

Use of Appropriation Funds	**Amount**
Personnel Expenses	$ 0.00
Contract Expenses	$ 0.00
Other Expenses	$ 0.00
Total Amount of Appropriation Funds Expended	$ 0.00

Narrative *Describe the outcomes, results, benefit, and or uses of the appropriation funds*

IN WITNESS WHEREOF, the City of Santa Fe has agreed to this Grant Award as of the date of the signature by the required approval authorities below.

ATTEST:

GERALYN CARDENAS, INTERIM CITY CLERK

CITY ATTORNEY'S OFFICE:

Oct 14, 2024

REBECCA MNUK-HERRMANN, ASSISTANT CITY ATTORNEY

Match Fund Grant Agreement MG25-85 with CoSF signature page

Final Audit Report 2024-10-14

Created:	2024-10-08
By:	Amy Cawthon (amcawthon@santafenm.gov)
Status:	Signed
Transaction ID:	CBJCHBCAABAAZGQblCr7sFpbEgtyiD4R0lUnGVLDNmWf

"Match Fund Grant Agreement MG25-85 with CoSF signature page" History

Document created by Amy Cawthon (amcawthon@santafenm.gov)
2024-10-08 - 5:30:23 PM GMT- IP address: 63.232.20.2

Document emailed to Rebecca Mnuk-Herrmann (ramnukherrmann@santafenm.gov) for signature
2024-10-08 - 5:30:55 PM GMT

Email viewed by Rebecca Mnuk-Herrmann (ramnukherrmann@santafenm.gov)
2024-10-14 - 9:59:52 PM GMT- IP address: 174.240.19.127

Document e-signed by Rebecca Mnuk-Herrmann (ramnukherrmann@santafenm.gov)
Signature Date: 2024-10-14 - 10:00:20 PM GMT - Time Source: server- IP address: 174.240.19.127

Agreement completed.
2024-10-14 - 10:00:20 PM GMT

Powered by Adobe Acrobat Sign

State of New Mexico
DEPARTMENT OF HOMELAND SECURITY & EMERGENCY MANAGEMENT
P.O. Box 27111
Santa Fe, NM 87502

SUB-RECIPIENT GRANT AGREEMENT
HAZARD MITIGATION GRANT PROGRAM

CFDA 97.039 : Hazard Mitigation Grant Program Post-Fire

1. SUB-GRANT NO.	2. SUB-RECIPIENT NAME	3. PROJECT NAME
DR-5430-0012-NM	City of Santa Fe	City of Santa Fe – Arroyo De Los Pinos Bio-Infiltration basins Advance Assistance

4. STATE DFA VENDOR NUMBER	5. EIN NUMBER	6. SAM UEI NUMBER	7. CAGE CODE
54360	85-6000168	QLN2YKMMJ8X6	4C987

8. SUB-RECIPIENT PHYSICAL ADDRESS	9. SUB-RECIPIENT REMIT ADDRESS
200 Lincoln Ave Santa Fe, NM 87501	-

10. DHSEM CONTACT NAME:	11. CONTACT DESK PHONE:	225-313-1774
Natalie West	CONTACT EMAIL ADDRESS:	DHSEM.mitigation@dhsem.nm.gov cc: natalie.west@dhsem.nm.gov

12a. PERFORMANCE PERIOD START DATE	07/26/2024	12b. PERFORMANCE PERIOD END DATE	01/25/2027

13. TOTAL AWARD AMOUNT:	$364,820.91

13a. FEDERAL SHARE	13b. LOCAL SHARE	13c. STATE SHARE
$277,080.50	$87,740.41	$0.00

	14a. NAME OF PROJECT AWARD	14b. FEDERAL SHARE	14c. NON-FEDERAL SHARE
1	Arroyo De Los Pinos Bio-Infiltration	$263,221.25	$87,740.41
2	Sub-Recipient Management Costs	$13,859.25	$
TOTAL AMOUNT OF PROJECT		$277,080.50	$87,740.41

WHEREAS The State of New Mexico will serve as the "pass-through entity" with respect to the State's role in providing sub-awards and administering grant assistance provided to sub-recipients and may, subject to a Memorandum of Agreement, directly support project development and administration.

WHEREAS funding has been obligated from the Federal Emergency Management Agency pursuant to a request by the applicant, The Sub-Recipient, City of Santa Fe.

NOW, THEREFORE, it is mutually understood and agreed between the recipient NMDHSEM, and **City of Santa Fe**, hereinafter referred to as "sub-recipient," as follows:

ARTICLE 1: REQUIREMENTS AND ASSURANCES

A. The sub-recipient hereby agrees that the performance period for the grant identified on Page 1, Box 1. is consistent with the performance period identified on Page 1, Box 12a. and 12b. This Sub-recipient Grant Agreement, as amended, shall remain open for administrative purposes if necessary to achieve final payment and financial reconciliation.

B. The sub-recipient hereby agrees that the sub-recipient official signing this Sub-recipient Grant Agreement certifies that all financial expenditures, including all supporting documents submitted for reimbursement, have been incurred by the sub-recipient and are eligible and allowable expenditures consistent with the guidelines for this award. The sub-recipient agrees to follow reasonable professional standards in all financial management and bookkeeping procedures necessary to carry out this agreement.

C. The sub-recipient hereby agrees that no member, officer, or employee of the sub-recipient organization, or its designees or agents, no member of the governing body of the locality in which the program is situated, and no other public official of such locality or localities who exercises any functions or responsibilities with respect to the program during his or her tenure or for one year after that, shall have any interest, direct or indirect, in any contract or subcontract, or the process thereof, for work to be performed in connection with this Sub-recipient Grant Agreement; the sub-recipient shall incorporate in all such contracts a provision prohibiting such interest pursuant to the purposes of this Sub-recipient Grant Agreement.

D. The sub-recipient hereby agrees that it understands and agrees that it cannot use any federal funds, either directly or indirectly, in support of the enactment, repeal, modification, or adoption of any law, regulation, or policy, at any level of government, without the express written approval of the State of New Mexico or FEMA.

E. The sub-recipient hereby agrees that FEMA reserves a royalty-free, non-exclusive, and irrevocable license to reproduce, publish, or otherwise use and authorize others to use, for federal government purposes: (1) the copyright in any work developed under this Sub-recipient Grant Agreement; and (2) any rights of copyright to which the sub-recipient purchases ownership with federal support. The sub-recipient agrees to consult with FEMA through NMDHSEM regarding allocating any patent rights that arise from or are purchased with this funding.

F. The sub-recipient hereby agrees that signatures of the sub-recipient officials on this Sub-recipient Grant Agreement attest to the sub-recipient's understanding, acceptance, and compliance with Lobbying, Debarment, Suspension, and Other Responsibility Matters; Drug- free Workplace; Conflict of Interest, and Non-Supplanting certifications. Federal funds will not be used to supplant state or local funds. Federal funds will be used to supplement existing sub-recipient funding to augment program activities and not replace those funds which have been appropriated in the budget for the

same purpose.

G. The sub-recipient hereby agrees that their accounting system allows for the separation of fund sources. Funding provided under this Sub-recipient Grant Agreement cannot be commingled with funds from other federal, state, or local agencies, and each project must be accounted for separately.

H. The sub-recipient hereby agrees that it shall comply with applicable Federal Civil Rights Laws and Regulations: Title VI of the Civil Rights Act of 1964, Section 504 of the Rehabilitation Act of 1973, Title IX of the Education Amendments of 1972, Age Discrimination Act of 1975, and Americans with Disabilities Act of 1991. The sub-recipient will take reasonable steps to ensure Limited English Proficient (LEP) persons have meaningful access to its programs and activities. Executive Order 13379 Individuals with Disabilities in Emergency Preparedness, requires the government to support safety and security for individuals with disabilities in situations involving disasters, including earthquakes, tornadoes, fires, floods, hurricanes, and acts of terrorism.

I. The sub-recipient hereby certifies that for its employees, it has an Affirmative Action Plan/Equal Employment Opportunity Plan (EEOP) if not exempted by the Federal Government or New Mexico rule or statute. An EEOP is not required for sub-recipients of less than $25,000 or fewer than 50 employees.

J. The sub-recipient hereby certifies that its employees are eligible to work in the United States as verified by Form I–9, Immigration & Naturalization Service Employment Eligibility.

K. The sub-recipient hereby agrees that it is the responsibility of the sub-recipient to fully understand and comply with the requirements of the following, where such requirements apply to the sub-recipient set forth in:

1. 2 C.F.R. § 200: Code of Federal Regulations
2. 44 C.F.R. parts 7, 9, 10, 13, 14, 17, 18, 25, 206, 220, 221, 44 C.F.R. Part 209, 2 C.F.R. Part 200 and any other applicable FEMA policy memoranda and guidance documents
3. FEMA Hazard Mitigation Assistance Program and Policy Guide
4. New Mexico State Procurement Code
   New Mexico Administrative Code Title 2 – Public Finance https://www.srca.nm.gov/nmac-home/nmac-titles/title-2-public-finance/

ARTICLE 2: REIMBURSEMENT OF FUNDS

The NMDHSEM will apply the following procedures for making payments to sub-recipients:

A. Payment of Funds, General: Once FEMA has obligated funds and NMDHSEM has budgeted and encumbered those funds, the Cabinet Secretary is authorized to advance funds, as permissible, and to consider requests for payments for progress and completion based on proper review and approvals, in accordance with the sub-grant agreement or amendment as described below. Review and audit of expending and accounting of federal awards and state funds will be conducted to ensure records, reports, and documentation for compliance and tracing of funds are accounted for; 2 C.F.R. §§ 200.302(b)(6), 200.305(a). The State Department of Finance and Administration (DFA) may require additional supporting data and documents prior to disbursement of funds.

B. Reimbursement shall be based upon authorized and allowable expenditures consistent with the project narrative, grant guidelines, and timely submission of Financial and Performance Progress Reports. Reimbursement of expenditures shall be requested quarterly or monthly if need be for

expenditures within the performance period. A minimum of 25% (of the total project cost) in the non-federal match must be included on each request for reimbursement. All expenditures must be supported with source documentation (e.g., copies of proof of payment, invoices, receipts, timesheets with name/rate/hours and certified, breakdown of expenditures based on FEMA approved budget, warrants, a brief description of work done, required deliverables, etc.). Request for reimbursement will not be processed if quarterly financial or performance reports are delinquent. The final payment of 15% will not be made until DHSEM verifies that all activities are complete. All payments shall be made on an actual cost reimbursement basis.

C. Contracts: All requests for proposals/bids, sole–source procurements, single vendor responses to a competitive bid, and contracts require DHSEM pre–approval prior to implementation. The relevant contract must accompany requests for reimbursement for contractual services.

D. Local Match: Local matching funds must clearly support the source, the amount, and the timing of all matching contributions. When requesting reimbursement, the match percentage must be shown on each invoice. Copies of proof of payment, invoices, receipts, purchase orders, timesheets with name/wage/hours, cost allocation, general ledger, warrants, etc., must be submitted as a backup for the match.

E. Non-reimbursable Expenses:

- Transfer of funds between any programs. Contracts, single vendor response to a competitive bid, sole source contracts, and any procurement documentation not pre-approved by DHSEM.
- Training and related travel costs not pre-approved by DHSEM.
- Supplanting (using federal funds to purchase items previously budgeted for with state or local funds).
- Maintenance and/or wear and tear costs of general use vehicles and emergency response apparatus.
- Equipment purchased for an exercise cannot be used for permanent installation and/or beyond the scope of an exercise.
- Weapons and ammunition.
- Entertainment and sporting events
- Personal items such as laundry, personal hygiene items, magazines, in-room movies, personal travel, and personal phone calls.
- Travel insurance, visa, and passport charges.
- Lodging costs in excess of State per diem, as appropriate.
- Lunch when travel is wholly within a single day.
- Standalone working meals.
- Bar charges, alcoholic beverages.
- Finance, late fees, or interest charges.
- Lobbying, political contributions, and legislative liaison activities.
- Organized fundraising, including salaries of persons while engaged in these activities.
- Expenditures not supported with appropriate documentation when submitted for reimbursement. Only properly documented expenditures will be processed for payment. Unsupported expenditures will be returned to the jurisdiction for resubmission.

F. **Payment Conditions.** The sub-recipient must certify that in requesting and accepting a sub-grant payment, they have spent those funds on eligible expenditures; that the work performed was within the scope of work allowed for specific projects; and that all records pertinent to specific projects will be retained for at least the periods required under record retention regulation requirements from the closeout of the last project. The period of record retention for grant and financial data is three years if state funds are paid.

G. Delays and Denial of Payment. Reasons for delays in FEMA processing of payment requests include, but are not limited to, the following:

- Vendor identification number is missing or incorrect;
- Disaster and project number is missing;
- Period of performance (POP) listed is incorrect;
- Service delivery dates do not agree with invoices or outside of contract period;
- Dollar amount on forms do not agree;
- Mathematical errors;
- Full address of sub-grantee is not included;
- Sub-recipient did not provide required back-up documentation; or

Reasons for NMDHSEM declining payment requests include, but are not limited to, the following:

- The POP has expired;
- The amount exceeds the remaining funding available for disbursement prior to the final financial and program compliance reviews (the hold or funding retention amount);
- Request for payment requires a state and/or budget amendment, and cannot be processed until the amendment request is received/approved;
- The reimbursement requested is for an activity outside of the approved scope of work;
- Forms are not signed by an authorized person, or are signed by only one signatory;
- Reimbursement of awarded funds have been suspended due to a non-compliance issue such as failure to submit quarterly reports; or
- Reimbursements of awarded funds have been suspended due to noncompliance activities.

Sub-recipients can reduce the likelihood of delays in processing of payment requests by checking for accuracy prior to submission.

ARTICLE 3: AUDITING AND REPORTING REQUIREMENTS

A. Quarterly Reports. In accordance with 2 C.F.R. § 200.328, the Applicant shall submit quarterly reports to the NMDHSEM beginning with the first full quarter after the signature date on the Sub-recipient Grant Agreement. The NMDHSEM will provide sub-recipient a form for this report. Quarterly reports are due no later than the 15th of the month following the end of the quarter - January 15, April 15, July 15, and October 15.

In order that NMDHSEM may adequately evaluate the progress and status of each sub-grant, quarterly reports shall contain a description of the work accomplished to date, the methods and procedures used, the anticipated completion date, a summary of all project costs to date, and other such information as may be of assistance in its evaluation of the project.

Reports shall be sent to the Department of Homeland Security & Emergency Management, Recovery Unit, P.O. Box 27111, Santa Fe, NM 87502, or electronically to DHSEM.mitigation@dhsem.nm.gov.

B. Additional Reporting Requirements. The sub-recipient must immediately report in writing to the NMDHSEM Mitigation Unit any alleged acts or allegations of fraud or misappropriation of funds for work authorized under this Sub-recipient Grant Agreement. This extends to reporting any legal action, lawsuit, bankruptcy, or other action that may jeopardize the successful completion of any authorized project. Additional reporting and financial reconciliation requirements may also be requested at NMDHSEM and FEMA's request. Failure to comply with these requests may jeopardize funding and may be a breach of this Sub-recipient Grant Agreement.

C. Enforcement. The NMDHSEM may suspend drawdowns, impose other special conditions, or take other authorized action pursuant to 2 C.F.R. § 200.339 (Remedies for Noncompliance) if the sub-recipient does not submit accurate and timely reports. This may include, among other things, the administrative closeout of a grant and/or any projects under a grant when the sub-recipient is not responsive to reasonable efforts NMDHSEM makes to collect required reports needed to complete closeout. Administrative closeout is a unilateral mechanism by NMDHSEM to move forward with project or grant closeout using available grant information in lieu of final reports. This can require NMDHSEM to make cash or cost adjustments and ineligible cost determinations, which may result in identifying a debt owed to FEMA and/or NMDHSEM.

D. Financial Procedures. The sub-recipient agrees to maintain financial procedures and support documents and to establish and maintain a proper accounting system to record expenditures of disaster assistance funds in accordance with generally accepted accounting principles or as directed by the Governor's Authorized Representative, to account for the receipt and expenditure of funds under this Agreement. If applicable, RECIPIENT / SUBGRANTEE shall conduct audit(s) pursuant to the Single Audit Act of 1984, 31 U.S.C. § 7501 et. seq., 44 C.F.R. Part 14, 2 C.F.R. Part 200, 0MB Circular A-133, "Audits of States, Local Governments, and Non-profit Organizations," and applicable New Mexico laws, rules and regulations. Further, sub-recipient must provide a hard copy of the Single Audit Report within sixty (60) days of the close of its fiscal year. Otherwise, pursuant to 44 C.F.R. § 13.43, NMDHSEM may withhold or suspend payments under any grant award.

The sub-recipient shall retain all financial records, supporting documents, statistical records, and any other documents pertinent to this contract for a period of five years after the date of submission of the final expenditures report. However, if litigation or an audit has been initiated prior to the expiration of the three-year period, the records shall be retained until the litigation or audit findings have been resolved.

E. Authorizing Statute. This award is made under the provisions of the Robert T. Stafford Disaster Relief and Emergency Assistance Act, Pub. L. No. 93-288 (1974) (codified as amended at 42 U.S.C. §§ 5121-5207) (Stafford Act), in accordance with 44 C.F.R. § 206.44.
All scopes of work and costs approved as a result of this Sub-recipient Grant Agreement, whether as estimates or final costs approved through subawards, PWs, or otherwise, will incorporate by reference the terms of this Sub-recipient Grant Agreement and must comply with applicable laws, regulations, policy, and guidance in accordance with this Sub-recipient Grant Agreement.

Pursuant to Executive Order 13858 Strengthening Buy-American Preferences for Infrastructure Projects, FEMA encourages recipients to use, to the greatest extent practicable and consistent with the law, iron and aluminum as well as steel, cement, and other manufactured products produced in the United States in Public Assistance and HMGP eligible public infrastructure repair and construction projects affecting surface transportation, ports, water resources including sewer and drinking water, and power. Such preference must be consistent with the law, including cost and contracting requirements at 2 C.F.R. Part 200.

F. Additional Terms and Conditions. The following additional sub-grant agreement documents are fully incorporated into this Sub-recipient Grant Agreement and thereby constitute additional terms and conditions of this agreement.

- The Stafford Act, its implementing regulations contained in Title 44 of the C.F.R., and FEMA policy and guidance.
- **Hazard Mitigation Assistance Guide (March 2023)**
- The Uniform Administrative Requirements, Cost Principles, and Audit Requirements for Federal Awards set forth at 2 C.F.R. Parts 200 and 3002.

- Attachment 1 United States Department of Homeland Security (USDHS) Standard Terms and Conditions (January 24, 2022) in effect on the date of the Declaration which are incorporated by reference into this Sub-recipient Grant Agreement
- Attachment 2 Reimbursement Checklist
- Attachment 3 Glossary and Definitions
- Attachment 4 Acronyms

ARTICLE 4: SCOPE OF WORK

A. As authorized by the Robert T. Stafford Disaster Relief and Emergency Assistance Act (the Stafford Act), as amended (42 U.S.C. § 5121 et seq.), and Section 662 of the Post Katrina Emergency Reform Act of 2006, as amended (6 U.S.C. § 762), the **City of Santa Fe** has been awarded funds for drainage assessment, modeling, conceptual design and final design of bio-infiltration basins to manage and treat stormwater collected by Siringo Road facility and surrounding neighborhoods. Funds shall be utilized as outlined in the approved budget as awarded by FEMA on **July 26,2024.** The Sub Recipient shall match the Federal Award Amount of **$263,221.25** with a local jurisdictional amount of **$87,740.41,** and a subrecipient management cost at 100% federal cost share of **$13,859.25** for a total project cost of **$364,820.91.** All work performed pursuant to this agreement must comply with the approved FEMA application. All work must be completed within the performance period, between **07/26/2024 – 01/25/2027.** The **City of Santa Fe** shall not sub-grant any part of this award to any other entity or organization. Within the first reporting quarter, all awards require confirmation that expenditures in the budget category toward this project will be made. If not, DHSEM may execute a de-obligation of Federal funds without recourse by the **City of Santa Fe.**

B. Approved projects must commence within the first reporting quarter. If a project cannot commence and be operational within the first reporting quarter of the approved award date, the sub–Recipient must submit a written statement to DHSEM, signed by the sub-recipient signatory officials, justifying the delay in implementation, the expected starting date, and a formal request to extend the project start date past the first reporting quarter. At the sole discretion of DHSEM, the grant award is subject to cancellation, and funds may be de-obligated and reallocated to other projects.

ARTICLE 5: PUBLICATIONS

A. Publications created with funding under this grant shall prominently contain the following statement or a DHSEM pre-approved modification: **This Document was prepared under a sub-grant from the FEDERAL EMERGENCY MANAGEMENT AGENCY, and the NEW MEXICO DEPARTMENT OF HOMELAND SECURITY AND EMERGENCY MANAGEMENT. Points of view or opinions expressed in this document are those of the authors and do not necessarily represent the official position or policies of the Federal Emergency Management Agency and the New Mexico Department of Homeland Security and Emergency Management.**

ARTICLE 6: PERFORMANCE PERIODS

The performance period for this sub-grant award is **07/26/2024 – 01/25/2027.** Further, all personnel-related grant activity must be completed between **07/26/2024 – 01/25/2027.** Funds may not be obligated outside of these time periods. An obligation occurs when funds are encumbered, as with a purchase order and/or commitment of salaries and benefits**. All obligated and encumbered funds *must be liquidated* within 45 days of the end of the performance period when the *Final Progress and Financial Reports* are due**.

ARTICLE 7: RECOVERY OF FUNDS FOR DUPLICATION OF BENEFITS AND INELIGIBLE ACTIVITIES

A. Ineligible Activities. The FEMA and/or NMDHSEM may disallow costs and recover funds based on the results of audit or review during or after performance of the award to ensure compliance with the terms of the Sub-recipient Grant Agreement and award document. The FEMA and/or NMDHSEM is required to recover funds when the sub-recipient has ineligible underruns (for example, actual costs for a PA large project are less than the amount awarded based on initial estimates); knowingly or negligently withholds or misrepresents material information; fails to complete work and comply with the terms of this Sub-recipient Grant Agreement or the approved award; expends federal funds in error; or incurs costs that are unreasonable or otherwise disallowed. If, after exhaustion of appeal rights, FEMA and/or NMDHSEM determines a debt is owed, the State has 30 days to resolve the amount owed before the debt is referred to the FEMA Finance Center for collection. The State may do so by directly paying FEMA. The State may also deposit the amount owed directly into the applicable subaccount in U.S. Health and Human Services (HHS)/Smartlink and notify FEMA when it has reimbursed that subaccount, after which FEMA will de-obligate that amount in the subaccount. Alternatively, the sub-recipient may request to substitute unallowable costs for other costs that are allowable (e.g., necessary, allocable, and reasonable under the same award and have not yet been reimbursed by FEMA).

B. Duplication of Benefits. In accordance with the provisions of 42 U.S.C. § 5155 (Section 312 of the Stafford Act), duplication of benefits is prohibited. The NMDHSEM must take all actions necessary and reasonable to ensure that all who receive federal assistance are aware of their responsibility to repay federal assistance that is duplicated by amounts available from insurance or any other source for the same purpose. The FEMA and/or NMDHSEM may at any time, pre-award or post-award, adjust the level of funding provided to account for financial assistance provided from any other source for the same purpose as the federal assistance or to account for benefits available for the same purpose from another source, irrespective of whether they are actually received. The sub-recipient shall notify NMDHSEM, as soon as practicable, of the existence of any insurance coverage for the costs identified in the application and of any entitlement to or recovery of funds from any other source for the project costs, including Small Business Administration funding, United States Department of Agriculture (USDA), and other Federal, State, and private funding. The amount of duplicate sources available shall reduce allowable costs. The sub-recipient shall be liable to NMDHSEM to the extent that the sub-recipient receives duplicate benefits from any other source for the same purposes for which the sub-recipient has received payment from the NMDHSEM.

C. Cooperation. The NMDHSEM agrees, on its behalf and on behalf of its political subdivisions and others that receive federal assistance, to cooperate with the Federal Government in seeking recovery of federal assistance against any party or parties whose intentional acts or omissions or whose negligence or other tortious conduct may have caused or contributed to the damage or hardship for which federal assistance was provided under this Sub-recipient Grant Agreement. If applicable, FEMA will treat recovered funds as duplicated benefits available to NMDHSEM/sub-recipient in accordance with Section 312 of the Stafford Act (codified as amended at 42 U.S.C. § 5155).

D. NMDHSEM Responsibilities. The NMDHSEM is responsible for recovering federal assistance expended in error, misrepresentation, fraud, or for costs otherwise disallowed or unused.

a. The NMDHSEM must notify FEMA of any potential debt as a result of federal funds expended in error, misrepresentation, fraud, or for costs otherwise disallowed or unused.

b. The NMDHSEM must report all cases of suspected fraud to the USDHS Office of Inspector General. The NMDHSEM must cooperate with any investigation conducted by the USDHS Office of Inspector General. The NMDHSEM must cooperate with FEMA regarding any and all lawsuits that may result from the NMDHSEM or FEMA's attempt to recover funds or disallow costs.

E. Statute of Limitations. The 3-year statute of limitations limiting FEMA's ability to initiate an administrative action to recover funds paid as provided for in Section 705(a) of the Stafford Act (codified as amended at 42 U.S.C. § 5205(a)) begins with:

a. Initiation of an Administrative Action to Recover Payment. The initiation of an administrative action to recover payment includes FEMA's written notice to the NMDHSEM or a sub-recipient of a questioned or disallowed cost or improper payment (including a request for information concerning such cost or payment) and written notice to the NMDHSEM or a sub-recipient of a FEMA or 3rd party review or audit.

F. Refunds, Rebates, and Credits. The NMDHSEM must transfer to FEMA the appropriate share, based on the federal support percentage, of any refund, rebate, credit or other amounts arising from the performance of this Sub-recipient Grant Agreement. The NMDHSEM must take necessary action to promptly collect all monies due or which may become due and if applicable, to cooperate with the Federal Government in any claim or suit in connection with amounts due.

G. Non-Compliant Sub-recipients. As per 2 C.F.R. §§ 200.207, 200.303(d) and 200.338(A-F), NMDHSEM can selectively use any or all the following remedies and prompt actions for non-compliance with any term of an award to include audit finding(s):

- **a.** Increased monitoring of projects and require additional financial and performance reports.
- **b.** Disallow advance payment process.
- **c.** Temporarily withhold payments pending correction of the deficiency.
- **d.** Disallow or deny use of funds and matching credit for all or part of the cost of the activity or action not in compliance.
- **e.** Request FEMA to completely or partially de-obligate funding for a project.
- **f.** Temporarily withhold payments pending correction of the deficiency by the sub-recipient.
- **g.** Withhold further awards for the grant program.
- **h.** Take other programmatic or legally available remedies.

ARTICLE 8: CONSTRUCTION REQUIREMENTS

A. The NMDHSEM must ensure that all applicable federal, state, and local permits and approvals are obtained, and all permit conditions are addressed before the start of any construction activity, including FEMA and NMDHSEM/sub-recipient compliance with the National Environmental Policy Act, the National Historic Preservation Act, the Endangered Species Act, and all other applicable environmental laws and executive orders. All construction should be in accordance with approved permits, projects plans and specifications, applicable building codes, and program guidance.

ARTICLE 9: NATIONAL ENVIRONMENTAL POLICY ACT (NEPA)/ENVIRONMENTAL PLANNING AND HISTORIC PRESERVATION (EHP) COMPLIANCE

A. The sub-recipient must provide information to FEMA the legally required environmental planning and historic preservation (EHP) review and to ensure compliance with the applicable EHP laws and Executive Orders (EO). These EHP requirements include but are not limited to National Environmental Policy Act, National Historic Preservation Act, Endangered Species Act, E 11988 Floodplain Management, EO 11990 Protection of Wetlands, and EO 12898 Environmental Justice. The sub-recipient must comply with all federal, state, local, tribal, and territorial EHP requirements and obtain applicable permits and clearances.

B. Sub-recipients shall not undertake any activity from the project that would result in ground disturbance, facility modification, or relates to the use of sonar equipment without the prior approval of FEMA. These include but are not limited to communications towers, physical security enhancements involving ground

disturbance, new construction, and modifications to buildings that are 50 years old or older, and exercises. The sub-recipient must comply with all mitigation or treatment measures required for the project as the result of FEMA's EHP review. An EHP Screening Form does not need to be provided for those exercises that are planned to take place at previously approved facilities, such as, fire and police academies, search and rescue training facilities, and explosive testing centers. Any type of exercise that requires any type of land, water, or vegetation disturbance or building of temporary structures must undergo an EHP review.

C. Any change to an approved project description will require re-evaluation for compliance with EHP requirements before the project can proceed. If ground disturbing activities occur during project implementation, the sub-recipient must ensure monitoring of ground disturbance and if any potential archeological resources are discovered, the sub-recipient will immediately cease construction in that area and notify NMDHSEM, FEMA and the New Mexico Historic Preservation Division. Initiation of these activities prior to completion of FEMA's EHP review will result in a non-compliance finding and may result in ineligibility of grant funding.

ARTICLE 10: PROPERTY AND EQUIPMENT MANAGEMENT

A. The sub-recipient will follow the property standards articulated in 2 C.F.R. § 200.310 through 2 CFR 200.326. The sub-recipient shall, when practical, prominently display the following on any equipment purchased with award funds: **PURCHASED WITH FUNDS PROVIDED BY THE FEDERAL EMERGENCY MANAGEMENT AGENCY.** No equipment purchased with these grant funds may be assigned to other entities or organizations without the expressed approval in writing from DHSEM prior to the jurisdiction's encumbrance or expenditure for that equipment.

B. The subrecipient will follow the property standards articulated in 2 C.F.R. § 200.310 through 2 C.F.R. § 200.326. The subrecipient shall maintain an effective property management system; safeguards to prevent loss, damage or theft; maintenance procedures to keep equipment in good condition; and disposition procedures. A Property Inventory Report shall be submitted to NMDHSEM annually each January 30 with the Financial Progress Report during the performance period, and continued submission is required annually until final disposition of the equipment. The subrecipient shall, when practical, prominently display the following on any equipment purchased with award funds: Purchased with funds provided by the U.S. Department of Homeland Security. No equipment purchased with these grant funds may be assigned to other entities or organizations without the expressed approval in writing from NMDHSEM, prior to the jurisdiction's encumbrance or expenditure for that equipment.

C. Any disposition of property or equipment must be in accordance with 2 C.F.R. § 200.313(e) and pre-approved by FEMA through NMDHSEM.

ARTICLE 11: SUBRECIPIENT MONITORING POLICY

A. In accordance with 2 C.F.R. § 200.328, NMDHSEM may periodically monitor a sub-recipient's projects to ensure that program goals, objectives, timelines, budgets, and other related program criteria are being met. The NMDHSEM reserves the right to periodically review and conduct analysis of the sub-recipient's financial, programmatic, and administrative policies and procedures. This monitoring may include review of accounting for receipts and expenditures, cash management, maintaining adequate financial records, means of allocating and tracking costs, contracting, procurement, records management, payroll, means of allocating staff costs, property and equipment management system, progress of project activities, etc. This may include unscheduled desk audits and field inspections. The sub-recipient shall accommodate all such requests within reason. If the sub-recipient encounters any unanticipated problem with the Scope of Work, allowed costs, procurement, permitting, or other difficulty, the sub-recipient must communicate that problem to NMDHSEM promptly. Work on affected projects must be suspended until the problem is

resolved. Technical assistance is available from NMDHSEM staff.

B. The sub-recipient will immediately, no later than 24-hours upon notice, report to NMDHSEM allegations of wrong-doing on the part of any contractor, sub-contractor, agent or employee of the sub-recipient, or other interested party in reference to the work authorized under this Sub-recipient Grant Agreement. This extends to any legal action, lawsuit, bankruptcy, or other action that may jeopardize the successful completion of any authorized project.

ARTICLE 12: PROCUREMENT

A. Procurement shall comply with all federal, state, and local procurement requirements including 2 C.F.R. § 200.320 and the New Mexico Procurement Code for expenditure of funds under this Agreement. The Applicant must conform to applicable state and federal law and the Procurement Standards Sections 2 C.F.R. § 200.317-326, and Appendix II. Contractors that develop or draft specifications, requirements, Statements of Work, and/or Requests for Proposals (RFP) for a proposed procurement shall be excluded from bidding or submitting a proposal to compete for the award of such procurement. Local bidder's preference is not allowed for federally funded procurements. Procurement transactions shall be conducted to provide maximum open and free competition.

B. When procuring property and services under this agreement, the sub-recipient will follow 2 C.F.R. § 200.318 through 2 C.F.R. § 200.326 and Appendix II. The sub-recipient must use its own documented procurement procedures which reflect applicable state, local, tribal, and territorial laws, and regulations, provided that the procurements conform to applicable federal law and the standards identified in 2 C.F.R. § 200. As such, the sub-recipient must use one of the methods of procurement identified in 2 C.F.R. § 200.320.

C. Also, per 2 C.F.R. § 200.318(i), subrecipients are required to maintain and retain records sufficient to detail the history of procurement covering at least the rationale for the procurement method, selection of contract type, contractor selection or rejection, and the basis for the contract price. States and territories are encouraged to maintain and retain this information as well and are reminded that in order for any cost to be allowable, it must be adequately documented per 2 C.F.R. § 200.403(g). Examples of the types of documents that would cover this information include but are not limited to:

- **a.** Solicitation documentation, such as requests for quotes, invitations for bids, or requests for proposals;
- **b.** Responses to solicitations, such as quotes, bids, or proposals;
- **c.** Pre-solicitation independent cost estimates and post-solicitation cost/price analyses on file for review by federal personnel, if applicable;
- **d.** Contract documents and amendments, including required contract provisions; and
- **e.** Other documents required by federal regulations applicable at the time a subgrant is awarded to a subrecipient.

D. Procurement from Minority Owned and Women Owned Business is encouraged and must be tracked and reported to NMDHSEM on the quarterly reports. Procurement transactions shall be conducted to provide maximum open and free competition. Each sole–source procurement single vendor response to a competitive bid, and all purchases require prior approval of NMDHSEM.

E. The sub-recipient will follow the property standards articulated in 2 C.F.R. § 200.310 through 2 C.F.R. § 200.326. The sub-recipient shall maintain an effective property management system; safeguards to prevent loss, damage or theft; maintenance procedures to keep equipment in good condition; and disposition procedures. Property and equipment records shall be maintained for a period of three years following the final disposition, replacement or transfer of the property and equipment.

ARTICLE 13: CONTRACTS

A. Contractors that develop or draft specifications, requirements, Statements of Work, and/or Requests for Proposals (RFP) for a proposed procurement shall be excluded from bidding or submitting a proposal to compete for the award of such procurement. Local bidder's preference is not allowed for federally funded procurements. Procurement transactions shall be conducted to provide maximum open and free competition. Each sole–source procurement, single vendor response to a competitive bid, and all purchases require prior approval of DHSEM.

B. Any contract shall comply with the requirements of Procurement Standards Sections of 28 C.F.R. Parts 66 and 70, 2 C.F.R. Part 200 and OMB Circulars A–102 "Uniform Administrative Requirements for Grants and Cooperative Agreements with State and Local Governments" for expenditure of Federal funds under this Sub-recipient Grant Agreement. Applicants shall submit procurement and contracts to NMDHSEM for review prior to approval. Contracts for professional services must meet applicable local, state, and federal requirements. All contractors must be licensed in New Mexico for the type of work that is required. Prior to any contracted work beginning, the sub-recipient shall provide NMDHSEM with a copy of the contractor's license. Contract work must not exceed the scope of work and PW awarded amount prescribed by FEMA, unless requested through a scope of work change and approval from FEMA.

C. Any contract entered during this sub-grant period shall comply with local, State, and Federal government contracting regulations. Professional and consultant services contracts must include local, State, and Federal government-required contract language, a project budget, SOW, and a pay schedule. ***All contracts require pre-approval by DHSEM prior to execution.*** Contract deliverables must meet the intent of the grant application and grant requirements. Justification is required for compensation for individual consultant services, which must be reasonable and consistent with the amount paid for similar services in the marketplace. Detailed invoices and time and effort reports are required for consultants.

ARTICLE 14: COMPETITION AND CONFLICTS OF INTEREST

A. Among the requirements of 2 C.F.R. § 200.319(b) applicable to all non-federal entities other than states, in order to ensure objective contractor performance and eliminate unfair competitive advantage, contractors that develop or draft specifications, requirements, statements of work, or invitations for bids or requests for proposals must be excluded from competing for such procurements. The FEMA considers these actions to be an organizational conflict of interest and interprets this restriction as applying to contractors that help a subrecipient develop its grant application, project plans or project budget. This prohibition also applies to the use of former employees to manage the grant or carry out a contract when those former employees worked on such activities while they were employees of the non-federal entity.

B. Under this prohibition, unless the subrecipient solicits for and awards a contract covering both development and execution of specifications (or similar elements as described above), and this contract was procured in compliance with 2 C.F.R. §§ 200.317 – 200.327, federal funds cannot be used to pay a contractor to carry out the work if that contractor also worked on the development of those specifications. This rule applies to all contracts funded with federal grant funds, including pre-award costs, such as grant writer fees, as well as post-award costs, such as grant management fees. Additionally, some of the situations considered to be restrictive of competition include, but are not limited to:

- **a.** Placing unreasonable requirements on firms for them to qualify to do business;
- **b.** Requiring unnecessary experience and excessive bonding;
- **c.** Noncompetitive pricing practices between firms or between affiliated companies;
- **d.** Noncompetitive contracts to consultants that are on retainer contracts;
- **e.** Organizational conflicts of interest;

f. Specifying only a "brand name" product instead of allowing "an equal" product to be offered and describing the performance or other relevant requirements of the procurement; and

g. Any arbitrary action in the procurement process.

C. Per 2 C.F.R. § 200.319(c), the subrecipient must conduct procurements in a manner that prohibits the use of statutorily or administratively imposed state, local, tribal, or territorial geographical preferences in the evaluation of bids or proposals, except in those cases where applicable federal statutes expressly mandate or encourage geographic preference. Nothing in this section preempts state licensing laws. **When contracting for architectural and engineering services, geographic location may be a selection criterion, provided its application leaves an appropriate number of qualified firms, given the nature and size of the project, to compete for the contract.**

D. Under 2 C.F.R. § 200.318(c)(1), the subrecipient is required to maintain written standards of conduct covering conflicts of interest and governing the actions of their employees engaged in the selection, award, and administration of contracts. **No employee, officer, or agent may participate in the selection, award, or administration of a contract supported by a federal award if he or she has a real or apparent conflict of interest.** Such conflicts of interest would arise when the employee, officer or agent, any member of his or her immediate family, his or her partner, or an organization that employs or is about to employ any of the parties indicated herein, has a financial or other interest in or a tangible personal benefit from a firm considered for a contract. The non-federal entity's officers, employees, and agents may neither solicit nor accept gratuities, favors, or anything of monetary value from contractors or parties to subcontracts. However, subrecipient entities may set standards for situations in which the financial interest is not substantial, or the gift is an unsolicited item of nominal value. The standards of conduct must provide for disciplinary actions to be applied for violations of such standards by officers, employees, or agents of the non-federal entity.

E. Under 2 C.F.R. § 200.318(c)(2), if the subrecipient has a parent, affiliate, or subsidiary organization that is not a state, local, tribal or territorial government, the subrecipient must also maintain written standards of conduct covering organizational conflicts of interest. In this context, organizational conflict of interest means that because of a relationship with a parent company, affiliate, or subsidiary organization, the subrecipient is unable or appears to be unable to be impartial in conducting a procurement action involving a related organization. The non-federal entity must disclose in writing any potential conflicts of interest to FEMA or NMDHSEM in accordance with applicable FEMA policy.

ARTICLE 15: CONTRACTS

A. Contracts for professional and consultant services executed during this grant period must include federal, state, local, tribal, and territorial government required contract language, a project budget, and require pre-approval by NMDHSEM prior to implementation. Contract deliverables must meet the intent of the grant application and grant requirements. Justification is required for compensation for individual consultant services, which must be reasonable and consistent with the amount paid for similar services in the marketplace. Detailed invoices and time and effort reports are required for consultants. *See* 2 C.F.R. § 200.1, 2 C.F.R. § 200 Appendix II to Part 200.

ARTICLE 16: AUDIT REQUIREMENTS

A. As a federal grant recipient, the State of New Mexico requires a sub-recipient expending $750,000 or more in federal funds in the organization's fiscal year to conduct an organization–wide audit in accordance with the Single Audit described in 2 C.F.R. § 200.501. The sub-recipient will permit state or federal officials and auditors to have access to sub-recipient and contractor records and financial statements as necessary for

the state to comply with 2 C.F.R. § 200.501. Copies of audit findings must be submitted to NMDHSEM within 30 days after the sub-recipient receives its audit report, or within a 9-month period of the grant closeout date, whichever is earlier. Include the federal agency name, program, grant number, the CFDA title and number, and the name of the pass-through agency (NMDHSEM) in all documents.

ARTICLE 17: RECORDS RETENTION

A. Records Retention.

a. **State Requirement.** The State must retain records for three years after all projects are complete and the federal disaster is formally closed out, except in certain rare circumstances described in 2 C.F.R. § 200.334 (Retention requirements for records), from the date it submits the final Federal Financial Report (SF-425) to FEMA in compliance with 2 C.F.R. § 200.334. If FEMA administratively closes the grant where no final SF-425 was submitted, FEMA uses the date the grant was administratively closed as the start date for the three-year record retention period.

b. **Sub-recipient Requirement.** The sub-recipients must retain project or subaward records for at least three years from the date that the NMDHSEM submits to FEMA the final expenditure report for a project or subaward. If, however, there is any litigation, claim, negotiation, audit, request for information, or other action involving the project or subaward that starts before that date, the records must be retained until completion of the action and resolution of all issues which arise from it, or until the end of the three-year period, whichever is later.

c. The sub-recipient will follow the record retention and access standards articulated in 2 C.F.R. § 200.333 through 2 C.F.R. § 200.337. The grant financial and administrative records shall be maintained for a period of three years following the date of the closure of the grant award, or audit if required. Time and effort, personnel and payroll records for all individuals reimbursed under the award must be maintained. Property and equipment records shall be maintained for a period of three years following the final disposition, replacement or transfer of the property and equipment.

d. The sub-recipient will be required to maintain project records until the expiration of the appropriate retention period. This includes records related to Management Costs, procurement, contracting, accounts payable, engineering, inventory, force account (materials, labor, and equipment), insurance settlements or other records related to the project scope of work. Retention procedures are outlined in the Hazard Mitigation Assistance Grant Programs Administrative Plan.

ARTICLE 18: CHANGES TO AWARD

A. All change requests must be submitted either in writing or electronically to the NMDHSEM contact for review 90 days prior to the termination of this Sub-recipient Grant Agreement. All change requests must be accompanied by a justification narrative and a budget and spending plan. All change requests must be consistent with the scope of the project and grant guidelines. Change requests will be considered only if reporting requirements are current, and all other terms and conditions of this Sub-recipient Grant Agreement have otherwise been met at the time of the request. If approved by NMDHSEM and FEMA, changes in the programmatic activities, purpose of the project, key personnel specified on the grant award, contractual services for activities central to the purposes of the award, change in project site, or release of special conditions, will result in an amendment to this award. Requests for changes must be formally submitted to NMDHSEM and FEMA.

B. Changes to this Sub-recipient Grant Agreement will be made via a Sub-recipient Grant Agreement Amendment. The NMDHSEM will prepare each Amendment when needed. No Sub-recipient Grant

Agreement Amendment is valid until fully executed.

ARTICLE 19: REMEDIES FOR NONCOMPLIANCE

A. For the reasons listed below, special conditions may be imposed, reimbursements may be partially or wholly withheld, the award may be wholly or partly suspended or terminated, or future awards, reimbursements and award modifications may be withheld. The NMDHSEM may institute the following, but is not limited to, withholding authority to proceed to the next phase of a project, requiring additional or more detailed financial reports, additional project monitoring, and/or establish additional prior approvals. The NMDHSEM shall notify the sub-recipient of its decision in writing stating the nature and the reason for imposing the conditions/restrictions, the corrective action required and timeline to remove them, and the method of requesting reconsideration of the imposed conditions/restrictions. The sub-recipient must respond within five days of receipt of notification.

- **a.** Unwillingness or inability to attain project goals or scope of work.
- **b.** Unwillingness or inability to adhere to Special Conditions of this Sub-recipient Grant Agreement.
- **c.** Failure or inability to adhere to grant guidelines and federal compliance requirements.
- **d.** Improper procedures regarding contracts and procurements.
- **e.** Failure to submit reliable and/or timely reports.
- **f.** Fiscal management which does not meet reasonable professional standards.
- **g.** Failure or inability to adhere to the terms and conditions of this Sub-recipient Grant Agreement.
- **h.** Unwillingness or inability to obtain permits required by law to perform the eligible work.
- **i.** Noncompliance with any and all federal, state, local and tribal grant requirements.

B. The NMDHSEM shall notify the sub-recipient of any non-compliance issues in writing and shall attempt to arrive at a resolution in a timely and reasonable fashion. If corrective action is required, NMDHSEM and the sub-recipient shall determine a timeline and landmarks for remediation. The NMDHSEM may require additional detailed financial reports or additional project monitoring. The ultimate penalty for non-compliance with the terms and conditions of this Sub-recipient Grant Agreement is for payments to be withheld or for the award to be suspended or terminated. The sub-recipient agrees to make restitution if necessary.

C. The NMDHSEM may take action as it determines appropriate under the circumstances including but not limited to withholding of payments, disallowance of costs, suspension or termination of the award if the sub-recipient fails to comply with applicable Federal and State statutes, regulations, or the terms of this Sub-recipient Grant Agreement pursuant to 2 C.F.R. § 200.339.

D. Nothing in this section abrogates the sub-recipient's right of appeal.

ARTICLE 20: TERMINATION

A. **For Cause:** In compliance with 2 C.F.R. § Part 200.340(a)(1), if performance is not occurring as agreed, the award may be reduced or terminated without compensation for reduction or termination costs. The NMDHSEM will provide notice of five days to the subrecipient stating the reasons for the action, steps taken to correct the problems, and the commencement date of the reduction or termination. The NMDHSEM will reimburse the subrecipient only for acceptable work or deliverables, necessary and allowable costs incurred through the date of reduction or termination. Final payment may be withheld at the discretion of NMDHSEM until completion of a final NMDHSEM review. Disposition of any equipment acquired under a terminated grant must be in accordance with 2 C.F.R. § 200.313(e).

B. For Convenience: In compliance with 2 CFR Part 200.340(a)(4), this Agreement may be terminated without cause by the subrecipient upon written notice setting forth the reasons for such termination, and the effective date at least 30 days prior to the intended date of termination. A termination pursuant to this provision does not nullify a party's obligations for performance, or liabilities for failure to perform already incurred prior to the date of termination. Any project may be terminated upon convenience, in whole or in part, for the convenience of the subrecipient; though a partial termination notification must specify that portion of the project which is to be terminated. Allowable costs obligated and/or incurred through the date of termination shall be reimbursed. Disposition of any equipment acquired under a terminated grant must be in accordance with 2 C.F.R. § 200.313(e).

ARTICLE 21: CLOSEOUT OF SUB-GRANT

A. Closeout of Projects. Per 2 C.F.R. § 200.344, sub-recipients must submit all cost and supporting documentation for completed projects. The NMDHSEM will review and verify all costs and supporting documents to validate compliance. Failure to comply will result in de-obligation of the project. The NMDHSEM will close each sub-recipient file once it has conducted full review and approval of all supporting documents for compliance and all projects are completed and has project activity closed out.

a. Management Costs. Management Costs will be used for internal staff salaries, contractor payments and other support costs associated with this grant. This will be in accordance with all laws, rules, and FEMA regulations. Management Costs will be processed in accordance with the Hazard Mitigation Assistance Program and Policy Guide.

The NMDHSEM commits to closeout of all grants regardless of the availability of management costs.

ARTICLE 22: SPECIAL CONDITIONS

A. The terms of this Sub-recipient Grant Agreement are contingent upon sufficient appropriations and authorizations being made by the USDHS FEMA under the Robert T. Stafford Disaster Relief and Emergency Assistance Act U.S.C. §§ 5121-5207. If sufficient appropriations and authorizations are not made by FEMA this Sub-recipient Grant Agreement shall terminate immediately upon written notice being given by NMDHSEM to the sub-recipient. The decision of NMDHSEM shall be final.

B. If NMDHSEM proposes an Amendment to the Sub-recipient Grant Agreement to unilaterally reduce funding, the sub-recipient shall have the option to terminate the Sub-recipient Grant Agreement or agree to the reduced funding within 30 days of receipt of the proposed Amendment.

C. Each party shall be solely responsible for fiscal or other sanctions occasioned because of its own violation of requirements applicable to the performance of this Sub-recipient Grant Agreement. Each party shall be liable for its own actions or inactions in accordance with state law and nothing herein shall be deemed a waiver, indemnity or to otherwise create or effect liabilities between the parties.

D. The grant award amount is a funding allocation and is not to be interpreted as expenditure authorizations or approvals.

E. All awarded projects must be planned for, conducted, budgeted, and expended within the designated performance period.

F. Quarterly financial and progress reports are due on October 15, January 15, April 15, and July 15, within the POP. Final reports are due 15 days after the end of POP.

G. All revision requests must be reviewed and approved by NMDHSEM staff. All requests must meet the original scope of the project which may result in a sub-recipient grant amendment.

H. A revision of a project's SOW must be pre-approved by NMDHSEM staff before the jurisdiction can proceed with the request for approval process. If the revision is approved, NMDHSEM staff may request additional documentation to proceed with recommendation to NMDHSEM Leadership for final approval.

I. The beneficiary of this award is solely responsible for all expenditures that are incurred outside of the award performance period. All expenditures that are incurred above and beyond the amount of this Sub-recipient Grant Agreement are the sole responsibility of the sub-recipient of this award.

J. Procurement from Minority Owned and Women Owned Business is encouraged and must be tracked and reported to NMDHSEM on the quarterly reports.

K. Upon completion of all awarded projects, any remaining funds will be de-obligated and reverted to NMDHSEM for return to FEMA.

L. Extensions due to exigent or emergency circumstances will be determined by NMDHSEM on a case-by-case basis.

State of New Mexico
Department of Homeland Security & Emergency Management
P.O. Box 27111
Santa Fe, NM 87502

The acceptance of a subgrant from the United States and the State of New Mexico creates a legal duty and obligation on the part of the sub-recipient to use the funds or property made available in accordance with the conditions of the grant as administered by and through the New Mexico Department of Homeland Security and Emergency Management. By signing this obligating award document, the sub-recipient certifies it has read, understood, and accepted these documents as binding.

SUB-RECIPIENT GRANT AGREEMENT
Signatures of Acceptance

SUB-GRANT NO:	**DR-5430-0012-NM**		
JURISDICTION GRANT PROGRAM MANAGER PRINTED NAME:			
OFFICIAL SIGNATURE:		**DATE:**	
CONTACT NUMBER:		**E-MAIL ADDRESS:**	
JURISDICTION CHIEF FINANCIAL OFFICER PRINTED NAME:			
OFFICIAL SIGNATURE:		**Date:**	
CONTACT NUMBER:		**E-MAIL ADDRESS:**	
JURISDICTION SIGNATORY OFFICIAL PRINTED NAME:			
OFFICIAL SIGNATURE:		**DATE:**	
CONTACT NUMBER:		**E-MAIL ADDRESS:**	
NMDHSEM MITIGATION PROGRAM BUREAU CHIEF PRINTED NAME:			
NMDHSEM MITIGATION PROGRAM BUREAU CHIEF OFFICIAL SIGNATURE / DATE:			
NMDHSEM GRANTS MANAGEMENT BUREAU CHIEF PRINTED NAME:			
NMDHSEM GRANTS MANAGEMENT BUREAU CHIEF OFFICIAL SIGNATURE / DATE:			
NMDHSEM DEPUTY CABINET SECRETARY OFFICIAL PRINTED NAME:			
NMDHSEM DEPUTY CABINET SECRETARY OFFICIAL SIGNATURE / DATE:			

Print one original agreement, sign and email to: DHSEM.MITIGATION@DHSEM.nm.gov

CITY OF SANTA FE:

_____
ALAN WEBBER, MAYOR

DATE:_____

ATTEST:

_____
CITY CLERK

CITY ATTORNEY'S OFFICE:

_____
ASSISTANT CITY ATTORNEY

APPROVED FOR FINANCES:

Emily K. Oster 11/01/2024
_____
FINANCE DIRECTOR

The page is intentionally left blank.

ATTACHMENT 1
USDHS Standard Terms and Conditions
(January 24, 2022)

The Fiscal Year (FY) 2022 USDHS Standard Terms and Conditions apply to all new federal financial assistance awards funded in FY 2022. These terms and conditions flow down to sub-recipients unless an award term or condition specifically indicates otherwise. The United States has the right to seek judicial enforcement of these obligations.

All legislation and digital resources are referenced with no digital links. The FY 2022 USDHS Standard Terms and Conditions will be housed on dhs.gov at www.dhs.gov/publication/fy15-dhs- standard-terms-and-conditions.

A. Assurances, Administrative Requirements, Cost Principles, Representations and Certifications

I. USDHS financial assistance recipients must complete either the Office of Management and Budget (OMB) Standard Form 424B Assurances – Non-Construction Programs, or OMB Standard Form 424D Assurances – Construction Programs, as applicable. Certain assurances in these documents may not be applicable to your program, and the USDHS financial assistance office (USDHS FAO) may require applicants to certify additional assurances. Applicants are required to fill out the assurances as instructed by the awarding agency.

II. USDHS financial assistance recipients are required to follow the applicable provisions of the Uniform Administrative Requirements, Cost Principles, and Audit Requirements for Federal Awards located at Title 2, Code of Federal Regulations (C.F.R.) Part 200 and adopted by USDHS at 2 C.F.R. Part 3002.

III. By accepting this Agreement, recipients, and their executives, as defined in 2 C.F.R. § 170.315, certify that their policies are in accordance with OMB's guidance located at 2 C.F.R. Part 200, all applicable federal laws, and relevant Executive guidance.

B. General Acknowledgements and Assurances

All recipients, sub-recipients, successors, transferees, and assignees must acknowledge and agree to comply with applicable provisions governing USDHS access to records, accounts, documents, information, facilities, and staff.

I. Recipients must cooperate with any USDHS compliance reviews or compliance investigations conducted by USDHS.

II. Recipients must give USDHS access to examine and copy records, accounts, and other documents and sources of information related to the federal financial assistance award and permit access to facilities or personnel.

III. Recipients must submit timely, complete, and accurate reports to the appropriate USDHS officials and maintain appropriate backup documentation to support the reports.

IV. Recipients must comply with all other special reporting, data collection, and evaluation requirements, as prescribed by law, or detailed in program guidance.

V. Recipients (as defined in 2 C.F.R. Part 200 and including recipients acting as pass-through entities) of federal financial assistance from USDHS or one of its awarding component agencies must complete the USDHS Civil Rights Evaluation Tool within thirty (30) days of receipt of the Notice of Award for the first award under which this term applies. Recipients of multiple awards of USDHS financial assistance should only submit one completed tool for their organization, not per award. After the initial submission, recipients are required to complete the tool once every two (2) years if they have an active award, not every time an award is made. Recipients should submit the completed tool, including supporting materials, to CivilRightsEvaluation@hq.dhs.gov. This tool clarifies the civil rights obligations and related reporting requirements contained in the USDHS

Standard Terms and Conditions. Sub-recipients are not required to complete and submit this tool to USDHS. The evaluation tool can be found at https://www.dhs.gov/publication/dhs- civil-rights-evaluation-tool.

The USDHS Office for Civil Rights and Civil Liberties will consider, in its discretion, granting an extension if the recipient identifies steps and a timeline for completing the tool. Recipients should request extensions by emailing the request to CivilRightsEvaluation@hq.dhs.gov prior to expiration of the 30-day deadline.

C. Standard Terms & Conditions

I. Acknowledgement of Federal Funding from USDHS

Recipients must acknowledge their use of federal funding when issuing statements, press releases, requests for proposal, bid invitations, and other documents describing projects or programs funded in whole or in part with federal funds.

II. Activities Conducted Abroad

Recipients must ensure that project activities performed outside the United States are coordinated as necessary with appropriate government authorities and that appropriate licenses, permits, or approvals are obtained.

III. Age Discrimination Act of 1975

Recipients must comply with the requirements of the Age Discrimination Act of 1975, Public Law 94-135 (1975) (codified as amended at Title 42, U.S. Code, § 6101 et seq.), which prohibits discrimination on the basis of age in any program or activity receiving federal financial assistance.

IV. Americans with Disabilities Act of 1990

Recipients must comply with the requirements of Titles I, II, and III of the Americans with Disabilities Act, Pub. L. 101-336 (1990) (codified as amended at 42 U.S.C. §§ 12101– 12213), which prohibits recipients from discriminating on the basis of disability in the operation of public entities, public and private transportation systems, places of public accommodation, and certain testing entities.

V. Best Practices for Collection and Use of Personally Identifiable Information

Recipients who collect personally identifiable information (PII) are required to have a publicly available privacy policy that describes standards on the usage and maintenance of the PII they collect. USDHS defines PII as any information that permits the identity of an individual to be directly or indirectly inferred, including any information that is linked or linkable to that individual. Recipients may also find the USDHS Privacy Impact Assessments: Privacy Guidance and Privacy Template as useful resources respectively.

VI. Civil Rights Act of 1964 – Title VI

Recipients must comply with the requirements of Title VI of the Civil Rights Act of 1964 (codified as amended at 42 U.S.C. § 2000d et seq.), which provides that no person in the United States will, on the grounds of race, color, or national origin, be excluded from participation in, be denied the benefits of, or be subjected to discrimination under any program or activity receiving federal financial assistance. USDHS implementing regulations for the Act are found at 6 C.F.R. Part 21 and 44 C.F.R. Part 7.

VII. Civil Rights Act of 1968

Recipients must comply with Title VIII of the Civil Rights Act of 1968, Pub. L. 90-284, as amended through Pub. L. 113-4, which prohibits recipients from discriminating in the sale, rental, financing, and advertising of dwellings, or in the provision of services in connection therewith, on the basis of race, color, national origin, religion, disability, familial status, and sex (see 42 U.S.C. § 3601 et seq.), as implemented by the U.S. Department of Housing and Urban Development at 24 C.F.R. Part 100. The prohibition on disability discrimination includes the requirement that new multifamily housing with four or more dwelling units—i.e., the public and common use areas and individual apartment units (all units in buildings with elevators and ground-floor units in buildings without elevators)—be designed and constructed with certain accessible features. (See 24 C.F.R. Part 100, Subpart D.)

VIII. Copyright

Recipients must affix the applicable copyright notices of 17 U.S.C. §§ 401 or 402 and an acknowledgement of U.S. Government sponsorship (including the award number) to any work first produced under federal financial assistance awards.

IX. Debarment and Suspension

Recipients are subject to the non-procurement debarment and suspension regulations implementing Executive Orders (E.O.) 12549 and 12689, which are at 2 C.F.R. Part 180 as adopted by USDHS at 2 C.F.R. Part 3002. These regulations restrict federal financial assistance awards, subawards, and contracts with certain parties that are debarred, suspended, or otherwise excluded from or ineligible for participation in federal assistance programs or activities.

X. Drug-Free Workplace Regulations

Recipients must comply with drug-free workplace requirements in Subpart B (or Subpart C, if the recipient is an individual) of 2 C.F.R. Part 3001, which adopts the Government-wide implementation (2 C.F.R. Part 182) of Sec. 5152-5158 of the Drug-Free Workplace Act of 1988 (41 U.S.C. §§ 8101-8106).

XI. Duplication of Benefits

Any cost allocable to a particular federal financial assistance award provided for in 2 C.F.R. Part 200, Subpart E may not be charged to other federal financial assistance awards to overcome fund deficiencies; to avoid restrictions imposed by federal statutes, regulations, or federal financial assistance award terms and conditions; or for other reasons. However, these prohibitions would not preclude recipients from shifting costs that are allowable under two or more awards in accordance with existing federal statutes, regulations, or the federal financial assistance award terms and conditions may not be charged to other federal financial assistance awards to overcome fund deficiencies; to avoid restrictions imposed by federal statutes, regulations, or federal financial assistance award terms and conditions; or for other reasons.

XII. Education Amendments of 1972 (Equal Opportunity in Education Act) – Title IX

Recipients must comply with the requirements of Title IX of the Education Amendments of 1972, Pub. L. 92-318 (1972) (codified as amended at 20 U.S.C. § 1681 et seq.), which provide that no person in the United States will, on the basis of sex, be excluded from participation in, be denied the benefits of, or be subjected to discrimination under any educational program or activity receiving federal financial assistance. USDHS implementing regulations are codified at 6 C.F.R. Part 17 and 44 C.F.R. Part 19.

XIII. Energy Policy and Conservation Act

Recipients must comply with the requirements of the Energy Policy and Conservation Act, Pub. L. 94- 163 (1975) (codified as amended at 42 U.S.C. § 6201 et seq.), which contain policies relating to energy efficiency that are defined in the state energy conservation plan issued in compliance with this Act.

XIV. Ensuring the Future is Made in All of America by All of America's Workers

Recipients must comply with the "Build America, Buy America" provisions of the Infrastructure Investment and Jobs Act and E.O. 14005 which provide that, as appropriate and to the extent consistent with law, the recipient must use all practicable means within their authority under a federal award to provide a preference for the purchase, acquisition, or use of goods, products, or materials produced in the United States (including but not limited to iron, aluminum, steel, cement, and other manufactured products.)

XV. False Claims Act and Program Fraud Civil Remedies

Recipients must comply with the requirements of the False Claims Act, 31 U.S.C. §§3729- 3733, which prohibit the submission of false or fraudulent claims for payment to the Federal Government. (See 31 U.S.C. §§ 3801-3812, which details the administrative remedies for false claims and statements made.)

XVI. Federal Debt Status

All recipients are required to be non-delinquent in their repayment of any federal debt. Examples of relevant debt include delinquent payroll and other taxes, audit disallowances, and benefit overpayments. (See OMB Circular A-129.)

XVII. Federal Leadership on Reducing Text Messaging while Driving

Recipients are encouraged to adopt and enforce policies that ban text messaging while driving as described in E.O. 13513, including conducting initiatives described in Section 3(a) of the Order when on official government business or when performing any work for or on behalf of the Federal Government.

XVIII. Fly America Act of 1974

Recipients must comply with Preference for U.S. Flag Air Carriers (air carriers holding certificates under 49 U.S.C.) for international air transportation of people and property to the extent that such service is available, in accordance with the International Air Transportation Fair Competitive Practices Act of 1974, 49 U.S.C. § 40118, and the interpretative guidelines issued by the Comptroller General of the United States in the March 31, 1981, amendment to Comptroller General Decision B-138942.

XIX. Hotel and Motel Fire Safety Act of 1990

Recipients must ensure that all conference, meeting, convention, or training space funded in whole or in part with federal funds complies with the fire prevention and control guidelines of Section 6 of the Hotel and Motel Fire Safety Act of 1990, 15 U.S.C. § 2225a.

XX. John S. McCain National Defense Authorization Act of Fiscal Year 2019

Recipients, sub-recipients, and their contractors and subcontractors are subject to the prohibitions described in section 889 of the John S. McCain National Defense Authorization Act for Fiscal Year 2019, Pub. L. No. 115-232 (2018) and 2 C.F.R. §§ 200.216, 200.327, 200.471, and Appendix II to 2 C.F.R. Part 200. Beginning August 13, 2020, the statute – as it applies to USDHS recipients, sub-recipients, and their contractors and subcontractors – prohibits obligating or expending federal award funds on certain telecommunications and video surveillance products

and contracting with certain entities for national security reasons.

XXI. Limited English Proficiency (Civil Rights Act of 1964, Title VI)

Recipients must comply with Title VI of the Civil Rights Act of 1964, (42 U.S.C. § 2000d et seq.) prohibition against discrimination on the basis of national origin, which requires that recipients of federal financial assistance take reasonable steps to provide meaningful access to persons with limited English proficiency (LEP) to their programs and services. For additional assistance and information regarding language access obligations, please refer to the USDHS Recipient Guidance: https://www.dhs.gov/guidance- published-help- department- supported-organizations-provide-meaningful-access-people-limited and additional resources on http://www.lep.gov.

XXII. Lobbying Prohibitions

Recipients must comply with 31 U.S.C. § 1352, which provides that none of the funds provided under a federal financial assistance award may be expended by the recipient to pay any person to influence, or attempt to influence an officer or employee of any agency, a Member of Congress, an officer or employee of Congress, or an employee of a Member of Congress in connection with any federal action related to a federal award or contract, including any extension, continuation, renewal, amendment, or modification.

XXIII. National Environmental Policy Act

Recipients must comply with the requirements of the National Environmental Policy Act of 1969, (NEPA) Pub. L. 91-190 (1970) (codified as amended at 42 U.S.C. § 4321 et seq. and the Council on Environmental Quality (CEQ) Regulations for Implementing the Procedural Provisions of NEPA, which require recipients to use all practicable means within their authority, and consistent with other essential considerations of national policy, to create and maintain conditions under which people and nature can exist in productive harmony and fulfill the social, economic, and other needs of present and future generations of Americans.

XXIV. Nondiscrimination in Matters Pertaining to Faith-Based Organizations

It is USDHS policy to ensure the equal treatment of faith-based organizations in social service programs administered or supported by USDHS or its component agencies, enabling those organizations to participate in providing important social services to beneficiaries. Recipients must comply with the equal treatment policies and requirements contained in 6 C.F.R. Part 19 and other applicable statues, regulations, and guidance governing the participations of faith-based organizations in individual USDHS programs.

XXV. Non-Supplanting Requirement

Recipients receiving federal financial assistance awards made under programs that prohibit supplanting by law must ensure that federal funds do not replace (supplant) funds that have been budgeted for the same purpose through non-federal sources.

XXVI. Notice of Funding Opportunity Requirements

All the instructions, guidance, limitations, and other conditions set forth in the Notice of Funding Opportunity (NOFO) for this program are incorporated here by reference in the award terms and conditions. All recipients must comply with any such requirements set forth in the program NOFO.

XXVII. Patents and Intellectual Property Rights

Recipients are subject to the Bayh-Dole Act, 35 U.S.C. § 200 et seq, unless otherwise provided by law. Recipients are subject to the specific requirements governing the development, reporting, and disposition of rights to inventions and patents resulting from federal financial assistance awards located at 37 C.F.R. Part 401 and the standard patent rights clause located at 37 C.F.R. § 401.14.

XXVIII. Procurement of Recovered Materials

States, political subdivisions of states, and their contractors must comply with Section 6002 of the Solid Waste Disposal Act, Pub. L. 89-272 (1965), (codified as amended by the Resource Conservation and Recovery Act, 42 U.S.C. § 6962.) The requirements of Section 6002 include procuring only items designated in guidelines of the Environmental Protection Agency (EPA) at 40 C.F.R. Part 247 that contain the highest percentage of recovered materials practicable, consistent with maintaining a satisfactory level of competition.

XXIX. Rehabilitation Act of 1973

Recipients must comply with the requirements of Section 504 of the Rehabilitation Act of 1973, Pub. L. 93-112 (1973), (codified as amended at 29 U.S.C. § 794,) which provides that no otherwise qualified handicapped individuals in the United States will, solely by reason of the handicap, be excluded from participation in, be denied the benefits of, or be subjected to discrimination under any program or activity receiving federal financial assistance.

XXX. Reporting of Matters Related to Recipient Integrity and Performance General Reporting Requirements.

If the total value of any currently active grants, cooperative agreements, and procurement contracts from all federal awarding agencies exceeds $10,000,000 for any period of time during the period of performance of this federal award, then the recipients must comply with the requirements set forth in the government-wide Award Term and Condition for Recipient Integrity and Performance Matters located at 2 C.F.R. Part 200, Appendix XII, the full text of which is incorporated here by reference in the award terms and conditions.

XXXI. Reporting Subawards and Executive Compensation Reporting of first tier subawards.

Recipients are required to comply with the requirements set forth in the government-wide award term on Reporting Subawards and Executive Compensation located at 2 C.F.R. Part 170, Appendix A, the full text of which is incorporated here by reference in the award terms and conditions.

XXXII. SAFECOM

Recipients receiving federal financial assistance awards made under programs that provide emergency communication equipment and its related activities must comply with the SAFECOM Guidance for Emergency Communication Grants, including provisions on technical standards that ensure and enhance interoperable communications.

XXXIII. Terrorist Financing

Recipients must comply with E.O. 13224 and U.S. laws that prohibit transactions with, and the provisions of resources and support to, individuals and organizations associated with terrorism. Recipients are legally responsible to ensure compliance with the Order and laws.

XXXIV. Trafficking Victims Protection Act of 2000 (TVPA) Trafficking in Persons.

Recipients must comply with the requirements of the government-wide financial assistance award term which implements Section 106 (g) of the Trafficking Victims Protection Act of 2000 (TVPA), codified as amended at 22 U.S.C. § 7104. The award term is located at 2 C.F.R. § 175.15,

the full text of which is incorporated here by reference.

XXXV. Universal Identifier and System of Award Management

Requirements for System for Award Management and Unique Entity Identifier Recipients are required to comply with the requirements set forth in the government-wide financial assistance award term regarding the System for Award Management and Universal Identifier Requirements located at 2 C.F.R. Part 25, Appendix A, the full text of which is incorporated here by reference.

XXXVI. USA PATRIOT Act of 2001

Recipients must comply with requirements of Section 817 of the Uniting and Strengthening America by Providing Appropriate Tools Required to Intercept and Obstruct Terrorism Act of 2001 (USA PATRIOT Act), which amends 18 U.S.C. §§ 175–175c.

XXXVII. Use of USDHS Seal, Logo and Flags

Recipients must obtain permission from their USDHS FAO prior to using the USDHS seal(s), logos, crests or reproductions of flags or likenesses of USDHS agency officials, including use of the United States Coast Guard seal, logo, crests or reproductions of flags or likenesses of Coast Guard officials.

XXXVIII. Whistleblower Protection Act

Recipients must comply with the statutory requirements for whistleblower protections (if applicable) at 10 U.S.C § 2409, 41 U.S.C. § 4712, and 10 U.S.C. § 2324, 41 U.S.C. §§ 4304 and 4310.

The remainder of this page is intentionally left blank.

ATTACHMENT 2
Reimbursement Checklist

DHSEM reserves the right to update this check list throughout the life of the grant to ensure compliance with applicable federal and state rules and regulations. ***Please only check the categories that apply to the reimbursement you are currently requesting.***

EQUIPMENT

- ☐ Have all invoices been included?
- ☐ Has AEL # been identified for each purchase?
- ☐ If service/warranty expenses are listed, are they only for the performance period of the grant?
- ☐ Has proof of payment been included? (e.g., canceled check, Electronic Funds Transfer (EFT) confirmation, or P-Card back up documentation which will include receipt with vendor, copy of credit card statement showing expense charged, and payment to credit card Company for that statement)

CONSULTANTS/CONTRACTORS

- ☐ Does the amount billed by consultant add up correctly?
- ☐ Has all appropriate documentation to denote hours worked been properly signed?
- ☐ Have copies of all planning materials and work product (e.g., meeting documents, copies of plans) been included? (If a meeting was held by recipient or contractor/consultant of recipient, an agenda and signup sheet with meeting date must be included).
- ☐ Has the invoice from consultant/contractor been included?
- ☐ Has proof of payment been included? (e.g., canceled check, Electronic Funds Transfer (EFT) confirmation, or P-Card back up documentation which will include receipt with vendor, copy of credit card statement showing expense charged, and payment to credit card Company for that statement).

SALARY POSITIONS (Note: this applies to positions billed under M&A)

- ☐ Have the following been provided: signed time sheet by employee and supervisor and proof that employee was paid for time worked (statement of earnings, copy of payroll check or payroll register)?
- ☐ Has a time period summary sheet been included for total claimed amount?
- ☐ Has a general ledger payroll report been included for total claimed amount? Ensure this report includes both employee and employer payroll information (i.e., benefits/contributions).
- ☐ Does the back-up documentation include a copy of the check stub per employee for the time period covered?
- ☐ Does the back-up documentation provided match the time period for which reimbursement is being requested?

OTHER:

- ☐ If EHP form needed – has copy of it and approval from USDHS/FEMA been included?

MATCHING FUNDS (IF APPLICABLE)

- ☐ Contributions are from Non-Federal funding sources.
- ☐ Contributions are from cash or in-kind contributions which may include training investments.
- ☐ Contributions are not from salary, overtime, or other operational costs unrelated to training.

This page is intentionally left blank.

ATTACHMENT 3
Glossary and Definitions

Applicant: When an entity applies for PA funding, it is the **Applicant**. Once the Applicant receives funding, it is either the **recipient, pass-through entity,** or a **sub-recipient**.

Authorized Equipment List (AEL): The Authorized Equipment List (AEL) is a list of approved equipment types allowed under FEMA's preparedness grant programs.

Backfill: The act of filling a position left by another employee who has been moved to another role.

Cost Match: Recipient or sub-recipient contribution. This can be cash (hard match) or third party in-kind (soft match). 2 C.F.R. 200.306.

Cost Sharing or Matching: The portion of project costs not paid by federal funds or contributions (unless otherwise authorized by federal statute). 2 C.F.R. 200.1 Cost sharing or matching.

Declared fire: An uncontrolled fire or fire complex, threatening such destruction as would constitute a major disaster, which the FEMA Regional Administrator has approved in response to a state's request for a fire management assistance declaration and in accordance with the criteria listed in 44 C.F.R. 204.21. Fire Management Assistance Declaration Criteria.

Disallowed costs: Those charges to a federal award that the federal awarding agency or pass-through entity determines to be unallowable, in accordance with the applicable federal statutes, regulations, or the terms and conditions of the federal award. 2 C.F.R. 200.1 Disallowed costs.

Demobilization: The process and procedures for deactivating, disassembling, and transporting back to their point of origin all resources that had been provided to respond to and support a declared fire.

Disaster: An emergency condition affecting all or part the state, overwhelming local resources, in which there is likely to be a significant recovery period. The Governor may request a Robert T. Stafford Act (Stafford Act) Disaster Declaration through FEMA, asking for the Public Assistance Program, Fire Management Assistance Program, Individual Assistance Program and Mitigation based upon known and estimated damage assessment data.

Disaster Recovery Reform Act of 2018 (DRRA): The DRRA represents the most comprehensive Emergency Management reform since the Post-Katrina Emergency Management Reform Act in 2006. It includes a larger and more reliable funding stream for pre-disaster mitigation, expanded assistance for individuals and households, and support for states, localities, tribes, and territories (SLTTs) to develop their own emergency management capabilities.

Emergency: A condition in which local and state emergency response agencies are overwhelmed by an incident to the point that federal assistance is needed. Unlike a disaster, an emergency does not have a recovery phase. The Governor may request a Stafford Act Emergency Declaration through FEMA, asking for the Public Assistance Program and/or Fire Management Assistance Grant.

Emergency Work: Work which must be done before, during and immediately after a disaster event to save lives and to protect improved property and public health and safety or to avert or lessen the threat of a major disaster. The FEMA Public Assistance emergency work Categories are:

- Category A (Debris Removal)
- Category B (Emergency Protective Measures)

Equipment: Tangible personal property (including information technology systems) having a useful life of more than one year and a per-unit acquisition cost which equals or exceeds the lesser of the capitalization level established by the non-federal entity for financial statement purposes, or $5,000. 2 C.F.R. 200.1 Equipment.

*Expenditures***:** Charges made by a non-federal entity to a project or program for which a federal award was received. 2 C.F.R. 200.1 Expenditures.

Federal Award: The federal financial assistance that a recipient receives directly from a federal awarding agency or indirectly from a pass-through entity. 2 C.F.R. 200.1 Federal award.

Federal Emergency Management Agency (FEMA): The federal agency responsible for coordinating disaster recovery efforts in partnership with state, local, and tribal governments.

Federal Share: The portion of the federal award costs that are paid using federal funds. 2 C.F.R. 200.1 Federal share.

FEMA/State Agreement: A formal, legal document between FEMA and the state or a tribal government giving the understandings, commitments, terms, conditions, and timelines for assistance resulting from a federal disaster, emergency, or fire declaration, declared by the President.

Governor's Authorized Representative (GAR): The person designated by the Governor to execute all necessary documents for disaster assistance programs on behalf of the state and local grant recipients. The GAR is responsible for state compliance with the FEMA/State Agreement. The GAR may also be designated as the State Coordinating Officer.

Hazard Mitigation: Mitigation is the effort to reduce loss of life and property by lessening the impact of disasters.

Hazard Mitigation (Sections 404 and 406): Section 406 Mitigation measures are specific to the mechanism of the declared disaster and are an integral part of the reconstructed work on a facility or will protect or benefit the repaired portion of the facility. These are different from mitigation measures that are considered for eligibility under the Hazard Mitigation Grant Program (HMGP) of Section 404 of the Stafford Act. In the HMGP program, measures are proposed that may involve facilities other than those damaged by the disaster, new facilities, or even non-structural measures such as the development of floodplain management regulations.

Incident Period: The time interval during which the declared disaster occurs. The Regional Administrator, in consultation with the Governor's Authorized Representative and the Principal Advisor will establish the incident period. Generally, costs must be incurred during the incident period to be considered eligible.

The declaration designates the incident period. The incident period is the span of time during which the federally declared incident occurs. This period varies in length, depending on the incident.

Improved Project: When performing restoration work on a damaged facility, a sub-recipient may use the opportunity to make improvements to the facility. Projects that incorporate such improvements are improved projects. The improved facility must have the same function and at least the equivalent capacity as that of the pre-disaster facility. Federal funding for improved projects is limited to the lesser of the following: the federal share of the approved estimated costs to restore the damaged facility to its pre-disaster design and function or the federal share of the actual cost of completing the improved project. The sub-recipient must obtain FEMA approval, via the NMDHSEM, for an improved project prior to

construction.

Indirect Costs: Costs a recipient or sub-recipient incurs for a common or joint purpose benefitting more than one cost objective that are not readily assignable to the cost objectives specifically benefited.

Joint Field Office (JFO): A temporary facility established in or near a declared disaster area to serve as the field headquarters for FEMA, other federal and state recovery personnel, and serve as the focal point for federal disaster operations, direction, coordination, and information.

Large Project: An approved project estimated to cost the same as or more than the large project threshold amount. The large project threshold is a dollar amount adjusted annually to reflect changes in the Consumer Price Index for all urban consumers. The large project threshold amount, applicable to all projects, is the amount in effect on the declaration date of the disaster, regardless of when project approval is made or when the work is performed.

Management Costs: Management costs are any indirect costs, any direct administrative costs, and any other administrative expenses associated with the administration of HMA awards and subawards. Management costs are provided under HMGP, HMGP Post Fire, BRIC and FMA. For the Hazard Mitigation Grant Program (HMGP) and Hazard Mitigation Grant Program Post Fire (HMGP Post Fire), recipients will be reimbursed no more than 15% of the total amount of the award, of which not more than 10% may be used by the recipient and 5% by the subrecipient. Under HMGP and HMGP Post Fire, recipients' Administrative Plans must include procedures for monitoring and reporting on subrecipient management costs before receiving funding for management costs. For Building Resilient Infrastructure and Communities (BRIC) and Flood Mitigation Assistance (FMA), recipients may apply for a maximum of 10% of the total funds requested in their application cost estimate (federal and non-federal shares) for management costs to support the sub-applications included as part of their award. Subapplicants for BRIC and FMA may apply for a maximum of 5% of the total funds requested in a sub-application for management costs. Additional information is available in FEMA Policy #104-11-1, Hazard Mitigation Grant Program Management Costs (Interim).

Pass-through Entity: A non-federal entity that provides a subaward to a sub-recipient to carry out part of a federal program. 2 C.F.R. 200.1 Pass through entity (PTE).

Performance Period for Hazard Mitigation Assistance: The period of time stipulated in the Sub-recipient Grant Agreement, as amended, during which the sub-recipient must finish the approved work. Projects completed after the active Period of Performance deadline will be considered ineligible.

Quarterly Financial Progress Report: The information in this report is used by NMDHSEM to monitor sub-recipient cash flow, performance, and project implementation to ensure proper use of federal funds.

Recipient: Formally referred to as the grantee or sub-grantee or applicant. Federally Recognized Indian Tribal Governments may also be Recipients if they so desire and if they meet FEMA requirements.

Recovery Officer: Aids in the administration of disaster recovery grant programs for statewide disasters and emergencies. Coordinates and co-administers disaster recovery grant programs, ensuring that they are implemented and carried out according to state and federal program requirements.

Recovery Unit: This is the unit within the NMDHSEM Response and Recovery Bureau designated as responsible for the programmatic administration of the FEMA PA and FMAG Programs.

Recovery Unit Manager: Responsible for administering and supervising staff responsible for federal and state disaster recovery programs and serves as the Deputy State Coordinating Officer (SCO) for

emergencies or major disaster declarations.

Response & Recovery Bureau Chief: Responsible for supervising staff responsible for federal and state disaster recovery programs and staff that provides operational response capabilities to support the citizens of New Mexico. This position also serves as State Coordinating Officer (SCO) for emergencies or major disaster declarations.

Request for Approval Form: Used by sub-recipient to request approval from NMDHSEM to expend funds for previously identified and approved projects. Approval must be received prior to expenditure.

Small Project: An approved project estimated to cost less than the large project threshold amount.

State Coordinating Officer (SCO): The person designated by the Governor to coordinate state and local disaster assistance efforts with those of the federal government. The GAR may also be the SCO. The Governor will name the GAR and the SCO in the FEMA/State Agreement.

Sub-recipient: Formally referred to as the sub-grantee or applicant, is a state agency, local government, tribal government, other legal governmental entity, or a private non-profit (PNP) organization that receives a sub-grant award and which is accountable to the state for the use of the funds provided. The FEMA reserves the final decision as to sub-recipient eligibility.

Supplanting: When a state or unit of local government reduces state or local funds for an activity specifically because federal funds are available (or expected to be available) to fund that same activity. When supplanting is not permitted, federal funds must be used to **supplement** existing state or local funds for program activities and may not replace state or local funds that have been appropriated or allocated for the same purpose. Additionally, federal funding may not replace state or local funding that is required by law. If a question of supplanting arises, the sub-recipient or grantee will be required to substantiate that the reduction in non-federal resources occurred for reasons other than the receipt or expected receipt of federal funds. US Department of Justice Office of Justice Programs, Grants 101.

The remainder of this page is intentionally left blank.

ATTACHMENT 4
Acronyms

AEL: Authorized Equipment List
AGAR: Alternate Governor's Authorized Representative
ASB: Administrative Services Bureau of NMDHSEM
CFDA: Catalog of Federal Domestic Assistance
DAC: Direct Administrative Costs
DOT: Department of Transportation
DPS: Department of Public Safety
DRRA: Disaster Recovery Refo1m Act of 2018
DSCO: Deputy State Coordinating Officer
DSIBD: Deputy State Infrastructure Branch Director
DSPAGS: Deputy State Public Assistance Group Supervisor
EMAC: Emergency Management Assistance Compact
EMMIE: Emergency Management Mission Integrated Environment
EMNRD: Energy, Minerals and Natural Resources Department
FEMA: Federal Emergency Management Agency
FFATA- Federal Funding Accountability and Transparency Act
FMAG - Fire Management Assistance Grant
GAR: Governor's Authorized Representative
IMAS: Intrastate Mutual Aid System
INF: Immediate Needs Funding
IOF: Initial Operating Facility
JFO: Joint Field Office
NSPO: Net Small Project Overrun
NMDHSEM: New Mexico Department of Homeland Security and Emergency Management
ONA: Other Needs Assistance
OMB: Office of Management and Budget
PA: Public Assistance
PAGS: Public Assistance Group Supervisor
PAPPG: Public Assistance Program and Policy Guide
PDA: Preliminary Damage Assessment
PDMG: Program Delivery Manager
PIO: Public Information Officer
PNP: Private Non-Profit
POP: Period of Performance
PW: Project Worksheet
R&R: Response & Recovery Bureau
REC: Record of Environmental Consideration
RO: Recovery Officer
RP A - Request for Public Assistance
SCO: State Coordinating Officer
SOW: Scope of Work
SHARE: New Mexico Statewide Human Resources, Accounting, and Management Reporting System

SIBD: State Infrastructure Branch Director
SPAGS: State Public Assistance Group Supervisor
SPAO: State Public Assistance Officer
USDHS: United States Department of Homeland Security
USFS: US Forest Service
VFO: Virtual Field Office

The remainder of this page is intentionally left blank.

City of Santa Fe New Mexico

Finance Department

Project Ledger Request Form

Date of Request: 09/11/2024 REC 9.27/24

Project Title: Arroyo de los Pinos BioInfiltration Basins

Project Type: ☒ CIP ☒ Grant ☐ Internal tracking

Project Id: OEM2523102
Grant Id: F2514 &S2536
Financial Analyst: Erika Lujan
PAL/CT (Finance Use Only)

Department: General Government/OEM

Project Manager: Kyle Morgan Ext: 629-2539

Project Date Range: 07/2024-01/25/2027

Create Fixed Asset ☐

☒ Multi-Funding (complete all funding sources, should equal 100%)

Funding Source: FEMA Sub-Grant No. DR-5430-0012-NM % of Funding: 75% -$277,081 (277080.50)

MUNIS Org:2310411/2212850 MUNIS Object: 490580 Awarded Amount: $263,222/$13,859

Funding Source: Department of Finance and Administration % of Funding: 25%
(87740.41)

MUNIS Org: 2310411 MUNIS Object: 490210 Awarded Amount: $87,741

Expense String Phase

A project must have at least one phase identified, this can be used as an additional level of tracking, for example, CIP - design, start-up cost, etc. For grants can be used as reimbursable types, such as transportation, salaries.

(You can create more than one phase and you can default MUNIS Orgs and Objects, optional)

Phase: Design MUNIS Org: 2310411 MUNIS Object: 572960
Phase: Project Management MUNIS Org: 2212850 MUNIS Object: 510300
Phase: _____ MUNIS Org: _____ MUNIS Object: _____

Grants Only (list all grants if applicable)

Grantor Name: FEMA-DR54300012NM Awarded Amount: 277080.50

AR Charge Code: 2212850.490580 ☐ Grant funds multiple projects
(Complete a form for each project)

Grantor Id: _____ Federal CFDA (if applicable) 97.039

Grantor Name: DFA MATCH GRANT-MG25-085 Awarded Amount: 87740.41

AR Charge Code: 2310411.490210 ☐ Grant funds multiple projects
(Complete a form for each project)

Grantor Id: _____ Federal CFDA (if applicable) N/A

(If grants please provide all grant award documents with form) ☒ Attached to Grant

HMGP_2023_ADLP_Council_Packet_2024-10-23

Final Audit Report 2024-11-01

Created:	2024-10-30
By:	Justin Gonzales (jmgonzales@santafenm.gov)
Status:	Signed
Transaction ID:	CBJCHBCAABAAD5PADKaUC_C0nFyviJUC1JSzl4Y7Iara

"HMGP_2023_ADLP_Council_Packet_2024-10-23" History

Document created by Justin Gonzales (jmgonzales@santafenm.gov)
2024-10-30 - 4:41:08 PM GMT- IP address: 63.232.20.2

Document emailed to BRIAN WILLIAMS (bgwilliams@santafenm.gov) for signature
2024-10-30 - 4:46:13 PM GMT

Email viewed by BRIAN WILLIAMS (bgwilliams@santafenm.gov)
2024-10-30 - 5:01:35 PM GMT- IP address: 104.47.65.254

Document e-signed by BRIAN WILLIAMS (bgwilliams@santafenm.gov)
Signature Date: 2024-10-30 - 5:02:04 PM GMT - Time Source: server- IP address: 63.232.20.2

Document emailed to rawheeler@santafenm.gov for signature
2024-10-30 - 5:02:07 PM GMT

Email viewed by rawheeler@santafenm.gov
2024-10-30 - 5:03:00 PM GMT- IP address: 104.47.64.254

Signer rawheeler@santafenm.gov entered name at signing as RW
2024-10-30 - 5:03:24 PM GMT- IP address: 63.232.20.2

Document e-signed by RW (rawheeler@santafenm.gov)
Signature Date: 2024-10-30 - 5:03:26 PM GMT - Time Source: server- IP address: 63.232.20.2

Document emailed to HENRI HAMMOND-PAUL (hmhammondpaul@santafenm.gov) for signature
2024-10-30 - 5:03:30 PM GMT

Email viewed by HENRI HAMMOND-PAUL (hmhammondpaul@santafenm.gov)
2024-10-31 - 3:34:43 PM GMT- IP address: 104.47.64.254

Powered by Adobe Acrobat Sign

Document e-signed by HENRI HAMMOND-PAUL (hmhammondpaul@santafenm.gov)
Signature Date: 2024-10-31 - 3:35:07 PM GMT - Time Source: server- IP address: 63.232.20.2

Document emailed to mtbonifer@santafenm.gov for signature
2024-10-31 - 3:35:09 PM GMT

Email viewed by mtbonifer@santafenm.gov
2024-10-31 - 4:10:39 PM GMT- IP address: 104.47.64.254

Signer mtbonifer@santafenm.gov entered name at signing as Matthew Bonifer
2024-10-31 - 4:34:13 PM GMT- IP address: 63.232.20.2

Document e-signed by Matthew Bonifer (mtbonifer@santafenm.gov)
Signature Date: 2024-10-31 - 4:34:15 PM GMT - Time Source: server- IP address: 63.232.20.2

Document emailed to ajhopkins@santafenm.gov ajhopkins@santafenm.gov (ajhopkins@santafenm.gov) for signature
2024-10-31 - 4:34:18 PM GMT

Email viewed by ajhopkins@santafenm.gov ajhopkins@santafenm.gov (ajhopkins@santafenm.gov)
2024-10-31 - 4:37:01 PM GMT- IP address: 104.47.65.254

Document e-signed by ajhopkins@santafenm.gov ajhopkins@santafenm.gov (ajhopkins@santafenm.gov)
Signature Date: 2024-10-31 - 4:40:10 PM GMT - Time Source: server- IP address: 63.232.20.2

Document emailed to EMILY OSTER (ekoster@santafenm.gov) for signature
2024-10-31 - 4:40:12 PM GMT

Email viewed by EMILY OSTER (ekoster@santafenm.gov)
2024-11-01 - 5:12:14 PM GMT- IP address: 104.47.65.254

Document e-signed by EMILY OSTER (ekoster@santafenm.gov)
Signature Date: 2024-11-01 - 5:22:00 PM GMT - Time Source: server- IP address: 63.232.20.2

Document emailed to JOHN BLAIR (jwblair@santafenm.gov) for signature
2024-11-01 - 5:22:04 PM GMT

Email viewed by JOHN BLAIR (jwblair@santafenm.gov)
2024-11-01 - 6:43:55 PM GMT- IP address: 104.47.65.254

Signer JOHN BLAIR (jwblair@santafenm.gov) entered name at signing as John Blair
2024-11-01 - 6:44:18 PM GMT- IP address: 63.232.20.2

Document e-signed by John Blair (jwblair@santafenm.gov)
Signature Date: 2024-11-01 - 6:44:20 PM GMT - Time Source: server- IP address: 63.232.20.2

Agreement completed.

2024-11-01 - 6:44:20 PM GMT

Signature: XAVIER VIGIL
XAVIER VIGIL (Nov 1, 2024 16:12 MDT)

Email: xivigil@santafenm.gov

24-0636 New Mexico Department of Finance and Administration

Final Audit Report 2024-11-01

Created:	2024-11-01
By:	XAVIER VIGIL (xivigil@santafenm.gov)
Status:	Signed
Transaction ID:	CBJCHBCAABAAuQyI49ZQ_XsOfi4kdRdNp10U4FphOD1O

"24-0636 New Mexico Department of Finance and Administratio n" History

Document created by XAVIER VIGIL (xivigil@santafenm.gov)
2024-11-01 - 10:10:55 PM GMT- IP address: 63.232.20.2

Document e-signed by XAVIER VIGIL (xivigil@santafenm.gov)
Signature Date: 2024-11-01 - 10:12:13 PM GMT - Time Source: server- IP address: 63.232.20.2

Document emailed to GERALYN CARDENAS (gfcardenas@santafenm.gov) for signature
2024-11-01 - 10:12:14 PM GMT

Email viewed by GERALYN CARDENAS (gfcardenas@santafenm.gov)
2024-11-01 - 10:16:40 PM GMT- IP address: 104.47.65.254

Document e-signed by GERALYN CARDENAS (gfcardenas@santafenm.gov)
Signature Date: 2024-11-01 - 10:16:49 PM GMT - Time Source: server- IP address: 63.232.20.2

Agreement completed.
2024-11-01 - 10:16:49 PM GMT

Powered by Adobe Acrobat Sign

CITY OF SANTA FE

Date: September 30, 2024

To: Mayor Alan Webber and Governing Body

Via: John Dupuis, Public Utilities Department Director JD
Mike Dozier, WWM Division Director MD

From: P. Fred Heerbrandt P.E., Engineer Supervisor, WWMD FH

Subject: Amendment #1 On-Call Repairs Price Agreement CIP 962

Vendor Name: TLC Plumbing

Vendor Number: 3291

ITEM AND ISSUE:
Public Utilities Department/Wastewater Management Division respectfully requests your review and approval of TLC General Service Contract Amendment #1 for On-Call repairs and Rehabilitation of Sewer Collection System, CIP #962. Request for the approval to increase compensation by $116,000 to the total contract amount not to exceed $657,613.77. Contract ending June 30, 2025. (P. Fred Heerbrandt, P.E., pfheerbrandt@santafenm.gov, 505-955-4623).

*Original City Clerk Item Number 21-0660
*Date of Original contract approval by Governing Body 10/18/21

Action Requested: Approval of Contract Amendment #1 and Approval of a BAR for $116,000 from the WWMD Enterprise Fund.

BACKGROUND AND SUMMARY:
The Original Contract, Item Number 21-0660, was approval by Governing Body on December 3, 2021. The contract is a 4-year contract with three contractors, which terminates on June 30, 2025. We are requesting increased compensation for TLC Plumbing, only.

PROCUREMENT METHOD:
ITB 21/46/B, Three bidders, Award to all three bidders.

Chief Procurement Officer Approval: _____ **Date:** Oct 22, 2024

Comment/Exceptions: NMSA 1978, Section 13-1-102, ITB

Supporting Information:

CONTRACT NUMBER:
The FY25 Munis contract number is 3203058

$$$$$ SOURCE/REVENUE: ☐Expense ☒Revenue

The funding source is:
Fund Name/Number: General Fund/Fund 500
Munis Org Name/Number: WW - Collection/5000362
Munis Object Name/Number: Repair and Maint Sys Equip/520150

If the project is grant funded? List grant award number: _____

Grant Manager / Accounting Officer Approval: _____ **Date:** ___
Comment/Exceptions: _____

Project Ledger #: _____

Budget Officer Approval: Andy Hopkins **Date:** Oct 22, 2024

Comment/Exceptions: _____

CAPITAL ASSET (will this procurement result in a tangible item that costs more than $5,000?):

☐Yes | ☐ No n/a

 # (if known): _____

Repair or Replacement of Existing Equipment:

☐Yes | ☒ No
If yes -> ☐Repair | ☐ Replacement

Please explain: Contract is for on-call repair or parcial replacement of collection system components.

Capital Project:
(New and improvement projects that are going to cost $10,000 or more)
☐ Yes | ☒ No

Project Ledger #: WWD2350001

Anticipated length of project: 3 years

Asset Manager Approval: _____ **Date:** _____
Comment/Exceptions: _____

Department Approvals:
IT Components: ☐ **Yes |** ☒ **No**
Vehicles: ☐ **Yes |** ☒ **No**
Facilities, Furniture, Fixtures, Equipment: ☐ **Yes |** ☒ **No**

Approval: _____ **Title:** _____ **Date**: _____
Approval: _____ **Title:** _____ **Date**: _____
Comment & Exceptions: _____

Department Contract Administrator Contact Info: P. Fred Heerbrandt, P.E., pfheerbrandt@santafenm.gov, 505-955-4623, Linda MacAllister, lmmacallister@santafenm.gov, 505-577-6731)

ATTACHMENTS:

Original Contract
Amendment #1
BAR

Item#_____
Munis Contract#3203058
Original Contract Item#21-0660
SWPA/GSA/Coop/RFP/ITB #: 21/46/B

CITY OF SANTA FE
AMENDMENT No. 1 TO
THE ON-CALL REPAIR, REPLACEMENT, EXTENSION, AND REHABILITATION OF SEWER COLLECTION SYSTEM CONTRACT
ITEM# 21-0660

This AMENDMENT No. 1 (the "Amendment") amends the CITY OF SANTA FE **ON-CALL REPAIR, REPLACEMENT, EXTENSION, AND REHABILITATION OF SEWER COLLECTION SYSTEM** CONTRACT, dated December 9, 2021 (the "Contract"), between the City of Santa Fe (the "City") and TLC Plumbing, Inc. (the "Contractor"). The date of this Amendment shall be the date when it is executed by the City and the Contractor whichever occurs last.

RECITALS:

A. Under the terms of the Contract, Contractor has agreed to provide the On-Call Repair, Replacement, Extension, And Rehabilitation of Sewer Collection System services.

B. Pursuant to Article 14 of the Contract, and for good and valuable consideration, the receipt and sufficiency of which are acknowledged by the parties, the City and the Contractor agree as follows:

2. COMPENSATION.

The amount of compensation is increased by a total of $116,000 so that Article 2, paragraph A reads in its entirety as follows:

A. The City shall pay to the Contractor in full payment for services satisfactorily performed up to a maximum of $657,613,77 total for the contract.

C. CONTRACT IN FULL FORCE.

Except as specifically provided in this Amendment, the Contract remains and shall remain in full force and effect, in accordance with its terms.

IN WITNESS WHEREOF, the parties have executed this Amendment No. 1 to the Contract as of the dates set forth below.

CITY OF SANTA FE:

ALAN WEBBER, MAYOR

DATE:

CONTRACTOR:
TLC Plumbing, Inc

Eddie C. Padilla (Sep 27, 2024 11:06 MDT)

Eddie Padilla

TITLE: President

DATE: Sep 27, 2024

CRS# 0

ATTEST:

GERALYN CARDENAS, INTERIM CITY CLERK

CITY ATTORNEY'S OFFICE:

Marcos Martinez
Marcos Martinez (Sep 27, 2024 11:10 MDT)

SENIOR ASSISTANT CITY ATTORNEY

APPROVED FOR FINANCES:

Emily K. Oster

FINANCE DIRECTOR

Log # *{Finance use only}*:	
Journal # *{Finance use only}*:	

City of Santa Fe, New Mexico
BUDGET AMENDMENT RESOLUTION (BAR)

DEPARTMENT / DIVISION NAME	DATE
Public Utilities/Wastewater	9/9/2024

ITEM DESCRIPTION	ORG	OBJECT	PROJECT	INCREASE	DECREASE
EXPENDITURES				*{enter as positive #}*	*{enter as negative #}*
Rep and Maint System Equip	5000362	520150	WWD25350001	$ 116,000.00	
REVENUES				*{enter as negative #}*	*{enter as positive #}*
				$ 116,000	$ -

JUSTIFICATION: *(use additional page if needed)*
--Attach supporting documentation/memo
To increase contract #3203058 for TLC - CIP - maint and repair in the amount of $116,000 from cash to increase total contract to $657,613.77.

{Complete section below if BAR results in a net change to ANY Fund}

Fund(s) Affected	Fund Balance Increase/(Decrease)
500	(116,000)
TOTAL:	**(116,000)**

Linda Macallister
Linda Macallister (Sep 30, 2024 11:08 MDT) Sep 30, 2024
Prepared By *{print name}* Date

Sep 30, 2024
Division Director Signature *{optional}* Date

John Dupuis (Oct 2, 2024 12:10 MDT) Oct 2, 2024
Department Director Signature Date

{Use this form for Finance Committee/ City Council agenda items ONLY}

CITY COUNCIL APPROVAL

City Council Approval Date

Agenda Item #:

Andy Hopkins Oct 22, 2024
Budget Officer Date

Finance Director *{≤ $5,000}* Date

City Manager *{≤ $60,000}* Date

City of Santa Fe, New Mexico

memo

Date: October 18, 2021

To: Public Works-Public Utilities Committee / Finance Committee

From: Michael L. Dozier, Wastewater Division Director MD
Stan Holland, Wastewater Division Engineer SH

Via: Shannon W. Jones, Utility Division Director SJ

RE: Request to Award Invitation to Bid # '21/46/B for the Publicly Owned Treatment Works (POTW) On-Call Repair, Replacement, Extension and Rehabilitation of Sewer Collection System Price Agreement, CIP #962 to Sub Surface Contracting, Inc., Allied 360 Construction, LLC. and TLC Plumbing, Inc. for a total amount up to $200,000 inclusive of nmgrt.

ITEM AND ISSUE:

1) The Wastewater Division requests award of Bid Number '21/46/B for the Publicly Owned Treatment Works (POTW) On-Call Repair, Replacement, Extension and Rehabilitation of Sewer Collection System Price Agreement, CIP #962 to Sub Surface Contracting, Inc., Allied 360 Construction, LLC. and TLC Plumbing, Inc. for the remainder of Four (4) Fiscal Years, FY 2021-22 until FY2024-25. Initial funding of $200,000.00 inclusive of NMGRT is requested for FY2021-22. Future funding will depend upon budget availability.

BACKGROUND AND SUMMARY:

The Publicly Owned Treatment Works (POTW) On-Call Repair, Replacement, Extension and Rehabilitation of Sewer Collection System Price Agreement is an on-call requirements contract, with the Wastewater Division issuing work orders as needed for work such as public sewer line replacements and work within the Wastewater Treatment Plant. The contract is funded from the Wastewater Division's Collection Section (Sewer Line Maintenance) and the Wastewater Facility Operations Section. The initial Contract amount is limited to $200,000.00 inclusive of New Mexico Gross Receipt Tax (NMGRT).

This was a multi-contractor award Invitation to Bid (ITB) to set the applicable Bid Items for future work. The ITB was only used to select the winning Contractors. Future work will be assigned under fully signed Work Orders for planned work or will be followed with a signed Work Order for Emergency repairs. The exact type of work required will be used to select from the applicable Bid Items. Not every Bit Item is anticipated to be used.

The initial contract period is Fiscal Years 2021-2025. The bids for this project were opened on June 24, 2021 and were subsequently evaluated for completeness and accuracy. The base bids are $163,971.00 and $166,293.00 for Allied 360 Construction. and Sub Surface Contracting respectively and were very similar in pricing for certain types of work. TLC was the highest bidder at $244,863.15.

Sub Surface Contracting has had the current On-Call Contract with the Wastewater Division for the past four years.

The Wastewater Division has verified with Los Alamos County that Allied 360 Construction has satisfactorily completed some of the type work outlined in the Bid.

TLC Inc. had the on-call contract with the Wastewater Division in the past prior to Sub Surface. TLC is also lower in pricing for some specialty work items like pipe bursting, trenchless spot repairs and major sewer line replacements and they have a larger work force to call upon.

For these reasons, it was decided to award and utilize all three (3) Contractors

A summary of the bids is provided below:

Bidders	Total Bid without NMGRT
Allied 360 Construction	$163.971.00
Sub Surface Contracting, Inc.	$166,293.00
TLC Plumbing & Utility	$244,863.15

CONTRACT NUMBER:
The FY22 Munis contract number:
Sub Surface Contracting # 3203056
Allied 360 # 3203057
TLC # 3203058

FUNDING SOURCE:
The funding source is:
Waste Water Operating Collections and Operations
FY 2022
Fund Name/Number: Waste Water Enterprise Fund/ 505
Munis Org Name/Number: Operations 5000367; Collections 5000362
Munis Object Name/Number: Repair & Maint. System Equip. / 520150

Funds for this work are available in Business Unit, Line Item 5000362-520150 (Collections) in the amount of $150,000.00 including NMGRT and Business Unit, Line Item 5000367-520150 (Operations) in the amount of $50,000.00

RECOMMENDATION:

The Wastewater Division recommends:

- Review and approval of award of contracts to Sub Surface Contracting, Inc., Allied 360 Construction and TLC Plumbing & Utility for Bid # '21/46/B for the FY 21/22 Publicly Owned

Treatment Works (POTW) On-Call Repair, Replacement, Extension and Rehabilitation of Sewer Collection System Price Agreement, CIP #962 for a total amount of $200,000.00 inclusive of NMGRT for FY2021-22.

- Forwarding and recommendation of approval of award and contract to the Finance Committee for their consideration and approval and to the Governing Body for their final consideration and approval.

(Rev. 4/20)

City of Santa Fe
Central Purchasing Office

Price Agreement

Awarded Contractor(s): 1) Allied 360 Construction, LLC. 2) Sub Surface Contracting, Inc. 3) TLC Plumbing, Inc. *(see page 15 for contact info)*	**Price Agreement Number:** **Payment Terms: Net 30**
Ship To: **All City of Santa Fe Departments and Political Subdivisions allowed by Law**	**F.O.B.: Destination**
Invoice To: **City of Santa Fe** **Accounts Payable** **PO Box 909** **Santa Fe, NM 87504-0909**	**Term: July 1, 2021 to June 30, 2025** **Delivery: As requested by Department**

Title: Publicly Owned Treatment Works (POTW) On-Call Repair, Replacement, Extension and Rehabilitation of Sewer Collection System Price Agreement CIP #962

This Price Agreement is to be awarded pursuant to the respective Invitation to Bid (ITB) 21/46/B and shall become a part thereof.

This Price Agreement is made subject to the "terms and conditions" as indicated on subsequent price agreement articles and construction contract pages.

Instructions to Supplier:

- By commencing under this Price Agreement (Agreement), the Contractor agrees to all terms and conditions within and attached and agrees that if there is a conflict with the Contractors terms, the City of Santa Fe's terms and conditions shall govern. In cases of discrepancy between the work order, purchase order and this Agreement, the terms and conditions of this Agreement shall prevail.
- Do not fill orders for goods/services not listed in this Agreement.
- Orders against this Agreement must be placed with as a separate contract work order with a purchase order.
- Do not fill orders without a valid quote, purchase order work order.
- The purchase order release number must be on all invoices.
- The City of Santa Fe (City) will not be liable for purchases made by unauthorized individuals.

Please forward all original invoice(s) to the Accounts Payable Department at PO Box 909, Santa Fe, NM 87504-0909

Instructions to Requesting Department:

- Do not place orders for goods/services not listed in the Procurement Contract.
- To place an order against this Procurement Contract, issue a Purchase Order Release before placing the order with the Supplier.

This Price Agreement is made subject to the "terms and conditions" as indicated on subsequent pages.

Terms and Conditions

General: When the City or the Requesting Department issues a contract or a purchase order release, a binding contract is created.

Variation in Quantity: No variation in the quantity of any item called for by this order will be accepted unless such variation has been caused by conditions of loading, shipping, packing or allowances in manufacturing process and then only to the extent, if any, specified in this order.

Assignment:

a. Neither the order, nor any interest therein, nor any claim thereunder, shall be assigned or transferred by the Contractor, except as set forth in Subparagraph 3b or as expressly authorized in writing by the Chief Procurement Officer or his/her designee. No such assignment or transfer shall relieve the Contractor from the obligations and liabilities under this order.

b. Contractor agrees that any and all claims for overcharge resulting from antitrust violations which are borne by the City as to goods, services, and materials purchased in connection with this agreement are hereby assigned to the City.

City Furnished Property: City furnished property shall be returned to the City upon request in the same condition as received except for ordinary wear, tear and modifications ordered hereunder.

Inspection: Final inspection and acceptance will be made at the destination. Supplies rejected at the destination for nonconformance with specifications shall be removed at the Contractor's risk and expense, promptly after notice of rejection.

Inspection of Plant: The Chief Procurement Officer or his/her designee may inspect, at any reasonable time, the part of the Contractor's, or any subcontractor's plant or place of business, which is related to the performance of this contract.

Commercial Warranty: The Contractor agrees that the supplies or services furnished under this order shall be covered by the most favorable commercial warranties the Contractor gives for such to any customer for such supplies or services. The rights and remedies provided herein shall extend to the City and are in addition to and do not limit any rights afforded to the City by any other clause of this order. **Contractor agrees not to disclaim warranties of fitness for a particular purpose of merchantability.**

Taxes: The unit price shall exclude all state taxes.

Default: The City reserves the right to cancel all or any part of this order without cost to the City, if the Contractor fails to meet the provisions of this order and, except as otherwise provided herein, to hold the Contractor liable for any excess cost occasioned by the City due to the Contractor's default. The Contractor shall not be liable for any excess costs if failure to perform the order arises out of causes beyond the control and without the fault or negligence of the Contractor, such causes include but are not restricted to, acts of God or the public enemy, acts of the State or Federal Government, fires, floods, epidemics, quarantine restrictions, strikes, freight embargoes, unusually severe weather and defaults of subcontractors due to any of the above, unless the City shall determine that the supplies or services to be furnished by the subcontractor were obtainable from other sources in sufficient time to permit the Contractor to meet the required delivery scheduled. The rights of

the City provided in this paragraph shall not be exclusive and are in addition to any other rights now being provided by law or under this order.

Non-Collusion: In signing this bid the Contractor certifies he/she has not, either directly or indirectly, entered into action in restraint of free competitive bidding in connection with this offer submitted to the Chief Procurement Officer or his/her designee.

Nondiscrimination: Contractor doing business with the City must be in compliance with the Federal Civil Rights Act of 1964 and Title VII of the Act (Rev. 1979) and the Americans with Disabilities Act of 1990 (Public Law 101-336).

The Procurement Code: Sections 13-1-28 through 13-1-199 NMSA 1978, imposes civil and criminal penalties for its violation. In addition the New Mexico criminal statutes impose felony penalties for bribes, gratuities and kickbacks.

Items: All bid items are to be NEW and of most current production, unless otherwise specified.

Payment for Purchases: Except as otherwise agreed to: late payment charges may be assessed against the Requesting Department in the amount and under the conditions set forth in Section 13-1-158 NMSA 1978.

Workers' Compensation: The Contractor agrees to comply with state laws and rules pertaining to Workers' Compensation benefits for its employees. If the Contractor fails to comply with Workers' Compensation Act and applicable rules when required to do so, this Agreement may be terminated by the contracting agency.

Contractor Personnel: Personnel proposed in the Contractor's written bid to the Procuring Agency are considered material to any work performed under this Price Agreement. Once a Purchase Order or contract has been executed, no changes of personnel will be made by the Contractor without prior written consent of the Requesting Department. Replacement of any Contractor personnel, if approved, shall be with personnel of equal ability, experience, and qualifications. The Contractor will be responsible for any expenses incurred in familiarizing the replacement personnel to insure their being productive to the project immediately upon receiving assignments. Approval of replacement personnel shall not be unreasonably withheld. The Requesting Department shall retain the right to request the removal of any of the Contractor's personnel at any time.

Subcontracting: The Contractor shall not subcontract any portion of the Price Agreement without the prior written approval of the Requesting Department. No such subcontracting shall relieve the Contractor from its obligations and liabilities under this Price Agreement, nor shall any subcontracting obligate payment from the City.

Records and Audit: The Contractor shall maintain detailed time and expenditure records that indicate the date, time, nature, and cost of services rendered during this Price Agreement's term and effect, and retain them for a period of three (3) years from the date of final payment under this Price Agreement. The records shall be subject to inspection by the City. The City shall have the right to audit billings, both before and after payment. Payment for services under this Price Agreement shall not foreclose the right of the City to recover excessive or illegal payments.

Subcontracts: The foregoing requirements for Contractor Personnel, Subcontracting, and Audit shall be inserted into all subcontracts from the prime contractor to the subcontractor.

ARTICLES

Article I – Statement of Work
Under the terms and conditions of this Price Agreement all commissions, institutions, political subdivisions and local public bodies allowed by law may issue orders for items and/or services described herein. The terms and conditions of this Price Agreement shall form a part of each order issued hereunder.

The items and/or services to be ordered shall be as listed under Article X - Price Schedule. All orders issued hereunder will bear both an order number and this Price Agreement number. It is understood that no guarantee or warranty is made or implied by the City's Chief Procurement Officer, his/her designee or the Requesting Department that any order for any definite quantity will be issued under this Price Agreement. The Contractor is required to accept the order and furnish the items and/or services in accordance with the articles contained hereunder for the quantity of each order.

Article II – Term
The term of this Price Agreement, for issuance of orders, shall be as indicated in the specifications.

Article III – Specifications
Items and/or services furnished hereunder shall conform to the requirements of specifications and/or drawings applicable to items listed under Article X-Price Schedule. Orders issued against this schedule will show the applicable Price Agreement item(s), number(s), and price(s); however they may not describe the item(s) fully.

Article IV – Shipping and Billing Instructions
Delivery shall be as called for by the Requesting Department. Shipment shall be made only against specific orders which the Requesting Department may place with the Contractor during the term. Contractor shall ship in accordance with the following instructions:

a. The Contractor shall enclose a packing list with each shipment listing the City's purchasing document number and the Contractor's name, Requesting Department's contact name and location shall be shown on each packing and delivery ticket, package, bill of lading, the commercial parts number (if any) for each item and other correspondence in connection with the shipments. The Requesting Department's count will be accepted by the Contractor as final and conclusive on all shipments not accompanied by a packing ticket.

b. The Contractor's invoice shall be submitted duly certified and shall contain the following information: order number, description of supplies or services, quantities, unit price and extended totals. Separate invoices shall be rendered for each and every complete shipment.

c. Invoices must be submitted to the City's **Accounts Payable** and NOT the Central Purchasing Office.

If Contractor is unable to meet stated delivery the City's Chief Procurement Officer or his/her designee must be notified.

Article V – Termination
The City may terminate this Agreement for convenience or cause. The Contractor may only terminate this Agreement based upon the City's uncured, material breach of this Agreement. Contractor shall give the City written notice of termination at least thirty (30) days prior to the intended date of termination, which notice shall (i) identify all the City's material breaches of this Agreement upon which the termination is based and (ii) state what the City must do to cure such material breaches. Contractor's notice of termination shall only be effective (i) if the City does not cure all material breaches within the thirty (30) day notice period or (ii) in the case of material breaches that cannot be cured within thirty (30) days, the City does not, within the thirty (30) day notice period, notify the Contractor of its intent to cure and begin with due diligence to cure the material breach.

Termination of this Contract, however, shall not affect any outstanding orders. This provision is not exclusive and shall not waive other rights and remedies afforded either party in the event of breach of contract or default. In such instances the contract may be cancelled effective immediately.

Article VI – Amendment
This Price Agreement may be amended by mutual agreement of the City's Chief procurement Officer or his/her designee and the Contractor upon written notice by either party to the other. An amendment to this Price Agreement shall not affect any outstanding orders issued prior to the effective date of the amendment as mutually agreed upon, and as published by the City's Chief procurement Officer or his/her designee. Amendments affecting price adjustments and/or the extension of a price agreement expiration date are not allowed unless specifically provided in the bid and price agreement specifications.

Article VII – Indemnity Clause
Contractor shall indemnify and hold harmless the City, its officers and employees, against liability, claims, damages, losses or expenses arising out of bodily injury to persons or damage to properties caused by, or resulting from Contractor's, and/or its employees, own negligent act or omission while Contractor, and/or its employees, perform or fails to perform its obligations and duties under the Terms and Conditions of this agreement. This hold harmless and indemnification clause is subject to the immunities, provisions, and limitations of the Tort Claims Act (Section 41-4-1, et seq., N.M.S.A. 1978 comp. and Section 57-7-1 N.M.S.A. 1878 comp. and any amendments thereto.

It is specifically agreed between the parties executing this agreement that it is not intended by any of the provisions of any part of the agreement to create in the public or any member thereof a third party beneficiary or to authorize anyone not a party to the agreement to maintain a suit(s) for wrongful death(s), bodily and/ or personal injury(s) to person(s), damage(s) to property(ies) and/or any other claim(s) whatsoever pursuant to the provisions of this agreement.

Contractor shall provide all insurance necessary to employees on the work site, including but not limited to Worker's Compensation.

Article VIII – Issuance or Work Orders
Only written signed Work Orders are valid under this Price Agreement.

Article IX – Packing (if applicable)
Packing shall be in conformance with standard commercial practices.

Article X – Price Schedule
Prices as listed in the item(s) price schedule hereto attached are firm.

Article XI – Wage Rates
Pursuant to the requirements of any Contract entered into that will have a Work Order (WO) in excess of sixty thousand dollars ($60,000) for construction is subject to the minimum wage rate determination issued by the New Mexico Department of Work Force Solutions for this project/WO.

Item# 21-0660
Munis Contract# 3203058

CITY OF SANTA FE

CAPITAL IMPROVEMENTS PROGRAM

AGREEMENT BETWEEN
CITY AND CONTRACTOR

PUBLICLY OWNED TREATMENT WORKS (POTW) ON-CALL REPAIR, REPLACEMENT, EXTENSION AND REHABILITATION OF SEWER COLLECTION SYSTEM PRICE AGREEMENT CIP #962

THIS AGREEMENT is made and entered into by and between the **CITY OF SANTA FE, NEW MEXICO**,hereinafter referred to as the "City," and **ALLIED 360 CONSTRUCTION, LLC., SUB SURFACE CONTRACTING, INC. AND TLC PLUMBING, INC.**, hereinafter referred to as the "Contractor(s)" and is effective as of the date set forth below upon which it is executed by the Parties.

IT IS AGREED BETWEEN THE PARTIES:

1. **Scope of Work.**
   A. The Contractor shall perform the following work:

      1) The City of Santa Fe Public Utilities Department Publicly Owned Treatment Works (POTW) On-call repair, replacement, extension and rehabilitation of sewer collection system Price Agreement and work related to those systems. This procurement will be based on a vendor supplying pricing through an established cost schedule (attached). The price agreement will contain the contractor's commitment to offer services and willingness to respond 'on-call 'to the requests when such requests are originated and authorized by the City of Santa Fe.

      The work under this contract is located in the City of Santa Fe at various sites throughout the City. The scope of work consists of furnishing all mobilization, labor, material, equipment and services, unless otherwise specified, for on-call emergency service and for routine work for the City of Santa Fe Sanitary Sewer Treatment Facility and Sanitary Sewer Collection System and appurtenances. Work to include repair, replacement, extension and rehabilitation of the sewer collection system to include trenching, excavation, backfill and compaction at excavation site, cleaning of loose debris, soil density testing, and any other incidental items necessary for the safety, health and welfare of the general public and to complete Work authorized under a Work Oder and in accordance with the drawings, specifications, and other Contract Documents.

   B. The Work to install fully functioning, warrantied sewer lines and manholes and other work issued by a Work Order includes, but is not limited to the following:

      1. Installation of all specified sewer lines, sewer manholes and service connections, etc.
      2. Earthwork, grading and compaction for the restoring the driving surface over disturbed

areas.

3. Coordination with Public Service Company of New Mexico (PNM) as required
4. Coordination with the New Mexico Gas Company as required
5. Coordination with Century Link as required
6. Coordination with New Mexico NM811 and/or contracting with utility location providers as required.
7. Coordination with the City's Wastewater Division for periodic review of system installations.
8. Any other related work associated with this work, as drawn and specified in the WO.
9. Provide all required materials testing.
10. Provide 12 month Contractor's warranty on installed sewer collection systems, parts and labor.
11. Provide Manufacturer's warranties on miscellaneous parts and labor.

C. The Contractor shall be responsible for adherence to the Contract Documents, Work Orders, Specifications and approved directives and Change Orders:

- The Contractor shall be responsible for State CID requirements and permit.
- The Contractor shall be responsible for verifications
- of all existing conditions, measurements and dimensions before signing each WO.
- The Contractor shall be responsible for all permits, fees, and State and/or City inspections associated with the construction.

D. The Contractor shall perform all the work required by the Wastewater Management Division, as required, on each Work Order (WO) in the Contract Documents (attached) for the City of Santa Fe Public Utilities Department Publicly Owned Treatment Works (POTW) On-call Repair, Replacement, Extension and Rehabilitation of Sewer Collection System Price Agreement.

E. The Contractor shall be responsible for verifications of all measurements and dimensions for bidding on each subsequent Work Order.

F. The Contractor shall provide and keep at the work site, a complete "as-built" record set of drawings that shall be corrected daily and shall show every change from the original approved drawings and specifications. These changes shall be forwarded to City periodically. The drawings shall reflect exact and actual "as-built" conditions of construction, installation, and erection as it progresses. Where drawings are not adequate to show "as-built" conditions, Contractor shall prepare sketches which delineate the necessary "as-built" information. City shall furnish two (2) sets of all paper "blue-line" print "approved" drawings for use in accomplishing specified mark-up. Final "as-built" drawings shall be delivered to City by Contractor upon completion of the work.

G. The Contractor shall be responsible for maintaining traffic control at the site in conformance with the Manual on Uniform Traffic Control Devices.

H. The Contractor shall be responsible for all permits, fees, and State and City inspections associated with the construction.

I. Incorporation by Reference. All exhibits, addenda, schedules of ITB 21/46/B attached hereto and all certificates, work order documents, drawings, as-builts and other instruments contemplated to be delivered hereunder are hereby expressly made a part of this Agreement as fully as thoughset forth herein, and all references to this Agreement herein or in any of such writings shall be deemed to refer to and include all of such writings. This Agreement contains the entire agreement between the parties with respect to the subject matter hereof and supersedes all prior agreements and understandings, both written and oral, among the parties with respect to the subject matter hereof. If there is any conflict between such exhibits or addenda and the terms of this Agreement, such exhibits or addenda shall control.

2. **Compensation.**

A. The City shall pay to the Contractor in full payment for services satisfactorily performed BASED UPON THE ATTACHED PRICE SHEETS, DELIVERABLES, MILESTONES, AND COMPLETED WORK ORDERS (WO) including gross receipts tax.

The applicable gross receipts taxes or local option taxes shall be shown as a separate amount on each billing or request for payment made under the contract.

The parties do not intend for the Contractor to continue to provide services without compensation when the total compensation amount is reached. In no event will the Contractor be paid for services provided in excess of the total compensation amount without this Agreement being amended in writing prior to those services in excess of the total compensation amount being provided.

B. Payment is subject to availability of funds pursuant to the Appropriations Paragraph set forth below and to any negotiations between the parties from year to year pursuant to Paragraph 1, Scope of Work, and to approval by the City. All invoices MUST BE received by the City no later than thirty 30) days after the termination of the Fiscal Year in which the services were delivered. Invoices received after such date WILL NOT BE PAID.

C. Payment in future fiscal years is subject to availability of funds pursuant to the Appropriations Paragraph set forth below and to any negotiations between the parties from year to year pursuant to Paragraph 1, Scope of Work, and to approval by the City. All invoices MUST BE receivedby the City no later than fifteen (15) days after the termination of the Fiscal Year in which the services were delivered. Invoices received after such date WILL NOT BE PAID.)

E. The Contractor must submit a detailed statement accounting for all services performed and expenses incurred. If the City finds that the services are not acceptable, within thirty days after thedate of receipt of written notice from the Contractor that payment is requested, it shall provide the Contractor a letter of exception explaining the defect or objection to the services, and outlining steps theContractor may take to provide remedial action. Upon certification by the City that the services have been received and accepted, payment shall be tendered to the Contractor within thirty days after the dateof acceptance. If payment is made by mail, the payment shall be deemed tendered on the date it is postmarked. However, the City shall not incur late charges, interest, or penalties for failure to make payment within the time specified herein.

3. **Term.**

THIS AGREEMENT SHALL NOT BECOME EFFECTIVE UNTIL APPROVED BY THE CITY. This Agreement shall terminate on **June 30, 2025** unless terminated pursuant to paragraph 4 (Termination), or paragraph 5 (Appropriations). In accordance with Section 13-1-150 NMSA 1978, no contract term for a professional services contract, including extensions and renewals, shall exceed four years, except as set forth in Section 13-1-150 NMSA 1978.

4. **Termination.**

A. Termination. This Agreement may be terminated by either of the parties hereto upon written notice delivered to the other party at least thirty (30) days prior to the intended date of termination. Except as otherwise allowed or provided under this Agreement, the City's sole liability upon such termination shall be to pay for acceptable work performed prior to the Contractor's receipt of the notice of termination, if the City is the terminating party, or the Contractor's sending of the notice of termination, if the Contractor is the terminating party; provided, however, that a notice of termination shall not nullify or otherwise affect either party's liability for pre-termination defaults under or breaches of this Agreement. The Contractor shall submit an invoice for such work within thirty (30) days of receiving or sending the notice of termination. Notwithstanding the foregoing, this Agreement may be terminated immediately upon written notice to the Contractor if the Contractor becomes unable to perform the services contracted for, as determined by the City or if, during the term of this Agreement, the Contractor or any of its officers, employees or agents is indicted for fraud, embezzlement or other crime due to misuse of City funds or due to the Appropriations paragraph herein. *THIS PROVISION IS NOT EXCLUSIVE AND DOES NOT WAIVE THE City's OTHER LEGAL RIGHTS AND REMEDIES CAUSED BY THE CONTRACTOR'S DEFAULT/BREACH OF THIS AGREEMENT.*

B. Termination Management. Immediately upon receipt by either the City or the Contractor of notice of termination of this Agreement, the Contractor shall: 1) not incur any further obligations for salaries, services or any other expenditure of funds under this Agreement without written approval of the City; 2) comply with all directives issued by the City in the notice of termination as to the performance of work under this Agreement; and 3) take such action as the City shall direct for the protection, preservation, retention or transfer of all property titled to the City and records generated under this Agreement. Any non-expendable personal property or equipment provided to or purchased by the Contractor with contract funds shall become property of the City upon termination and shall be submitted to the City as soon as practicable.

5. **Appropriations.**

The terms of this Agreement are contingent upon sufficient appropriations and authorization being made by the City Council for the performance of this Agreement. If sufficient appropriations and authorization are not made by the City Council, this Agreement shall terminate immediately upon written notice being given by the City to the Contractor. The City's decision as to whether sufficient appropriations are available shall be accepted by the Contractor and shall be final. If the City proposes an amendment to the Agreement to unilaterally reduce funding, the Contractor shall have the option to terminate the Agreement or to agree to the reduced funding, within thirty (30) days of receipt of the proposed amendment.

6. **Status of Contractor.**

The Contractor and its agents and employees are independent contractors performing professional services for the City and are not employees of the City. The Contractor and its agents and

employees shall not accrue leave, retirement, insurance, bonding, use of City vehicles, or any other benefits afforded to employees of the City as a result of this Agreement. The Contractor acknowledges that all sums received hereunder are reportable by the Contractor for tax purposes, including without limitation, self-employment and business income tax. The Contractor agrees not to purport to bind the City unless the Contractor has express written authority to do so, and then only within the strict limits of that authority.

7. **Construction Contract Performance and Payment Bond.**

A. When a construction contract is awarded in excess of twenty-five thousand dollars ($25,000), the following bonds or security shall be delivered to the City and shall become binding on the parties upon the execution of the contract. If the Contractor fails to deliver the required performance and payment bonds, the Contractor's bid shall be rejected, its bid security shall be enforced to the extent of actual damages. Award of the contract shall be made pursuant to the Procurement Code in the following manner:

1) a performance bond satisfactory to the City, executed by a surety company authorized to do business in this state and said surety to be approved in federal circular 570 as published by the United States treasury department or the state board of finance or the local governing authority, in an amount equal to one hundred percent of the price specified in the contract; and

2) a payment bond satisfactory to the City, executed by a surety company authorized to do business in this state and said surety to be approved in federal circular 570 as published by the United States treasury department or the state board of finance or the local governing authority, in an amount equal to one hundred percent of the price specified in the contract, for the protection of all persons supplying labor and material to the contractor or its subcontractors for the performance of the work provided for in the contract.

B. A subcontractor shall provide a performance and payment bond on a public works building project if the subcontractor's contract for work to be performed on a project is one hundred twenty-five thousand dollars ($125,000) or more.

8. **Assignment.**

The Contractor shall not assign or transfer any interest in this Agreement or assign any claims for money due or to become due under this Agreement without the prior written approval of the City.

9. **Subcontracting.**

The Contractor shall not subcontract any portion of the services to be performed under this Agreement without the prior written approval of the City. No such subcontract shall relieve the primary Contractor from its obligations and liabilities under this Agreement, nor shall any subcontract obligate direct payment from the City.

10. **Release.**

Final payment of the amounts due under this Agreement shall operate as a release of the City, its officers and employees from all liabilities, claims and obligations whatsoever arising from or under this Agreement.

11. Confidentiality.

Any confidential information provided to or developed by the Contractor in the performance of this Agreement shall be kept confidential and shall not be made available to any individual or organization by the Contractor without the prior written approval of the City.

12. Product of Service -- Copyright.

All materials developed or acquired by the Contractor under this Agreement shall become the property of the City and shall be delivered to the City no later than the termination date of this Agreement. Nothing developed or produced, in whole or in part, by the Contractor under this Agreement shall be the subject of an application for copyright or other claim of ownership by or on behalf of the Contractor.

13. Conflict of Interest; Governmental Conduct Act.

A. The Contractor represents and warrants that it presently has no interest and, during the term of this Agreement, shall not acquire any interest, direct or indirect, which would conflict in any manner or degree with the performance or services required under the Agreement.

B. The Contractor further represents and warrants that it has complied with, and, during the term of this Agreement, will continue to comply with, and that this Agreement complies with all applicable provisions of the Governmental Conduct Act, Chapter 10, Article 16 NMSA 1978.

C. Contractor's representations and warranties in Paragraphs A and B of this Article 12 are material representations of fact upon which the City relied when this Agreement was entered into by the parties. Contractor shall provide immediate written notice to the City if, at any time during the term of this Agreement, Contractor learns that Contractor's representations and warranties in Paragraphs A and B of this Article 12 were erroneous on the effective date of this Agreement or have become erroneous by reason of new or changed circumstances. If it is later determined that Contractor's representations and warranties in Paragraphs A and B of this Article 12 were erroneous on the effective date of this Agreement or have become erroneous by reason of new or changed circumstances, in addition to other remedies available to the City and notwithstanding anything in the Agreement to the contrary, the City may immediately terminate the Agreement.

D. All terms defined in the Governmental Conduct Act have the same meaning in this section.

14. Amendment.

A. This Agreement shall not be altered, changed or amended except by instrument in writing executed by the parties hereto and all other required signatories.

B. If the City proposes an amendment to the Agreement to unilaterally reduce funding due to budget or other considerations, the Contractor shall, within thirty (30) days of receipt of the proposed Amendment, have the option to terminate the Agreement, pursuant to the termination provisions as set forth in Article 4 herein, or to agree to the reduced funding.

15. Change Orders.

Changes. The Contractor may only make changes or revisions within the Scope of Work as defined by

Article 1 and/or Exhibit 1 after receipt of written approval by the City Manager or his/her designee. Such change may only be made to Tasks or Sub-Task as defined in the Scope of Work. Under no circumstance shall such change affect the:

1. Deliverable requirements, as outlined in the Scope of Work;
2. Due date of any Deliverable, as outlined in the Scope of Work;
3. Compensation of any Deliverable, as outlined in the Scope of Work;
4. Agreement compensation, as outlined in Article 2; or
5. Agreement termination, as outlined in Article 4.

Change Request Process. In the event that circumstances warrant a change to accomplish the Scope of Work as described above, a Change Request shall be submitted that meets the following criteria:

The Project Manager shall draft a written Change Request for review and approval by the City Manager to include:

1. the name of the person requesting the change;
2. a summary of the required change;
3. the start date for the change;
4. the reason and necessity for change;
5. the elements to be altered; and
6. the impact of the change.

The City Manager shall provide a written decision on the Change Request to the Contractor within a maximum of ten (10) Business Days of receipt of the Change Request. All decisions made by the City Manager are final. Change Requests, once approved, become a part of the Agreement and become binding as a part of the original Agreement.

16. Merger.

This Agreement incorporates all the Agreements, covenants and understandings between the parties hereto concerning the subject matter hereof, and all such covenants, Agreements and understandings have been merged into this written Agreement. No prior Agreement or understanding, oral or otherwise, of the parties or their agents shall be valid or enforceable unless embodied in this Agreement.

17. Entire Agreement.

This Agreement, together with any other documents incorporated herein by reference and all related Exhibits and Schedules constitutes the sole and entire agreement of the Parties with respect to the subject matter of this Agreement, and supersedes all prior and contemporaneous understandings, agreements, representations, and warranties, both written and oral, with respect to the subject matter. In the event of any inconsistency between the statements in the body of this Agreement, and the related Exhibits and Schedules, the statements in the body of this Agreement shall control.

18. Penalties for violation of law.

The Procurement Code, Sections 13-1-28 through 13-1-199, NMSA 1978, imposes civil and criminal penalties for its violation. In addition, the New Mexico criminal statutes impose felony penalties for illegal bribes, gratuities and kickbacks.

19. Equal Opportunity Compliance.

The Contractor agrees to abide by all federal and state laws and rules and regulations, and Santa Fe City Code, pertaining to equal employment opportunity. In accordance with all such laws of the State of New Mexico, the Contractor assures that no person in the United States shall, on the grounds of race, religion, color, national origin, ancestry, sex, age, physical or mental handicap, or serious medical condition, spousal affiliation, sexual orientation or gender identity, be excluded from employment with or participation in, be denied the benefits of, or be otherwise subjected to discrimination under any program or activity performed under this Agreement. If Contractor is found not to be in compliance with these requirements during the life of this Agreement, Contractor agrees to take appropriate steps tocorrect these deficiencies.

20. Applicable Law.

The laws of the State of New Mexico shall govern this Agreement, without giving effect to its choice of law provisions. Venue shall be proper only in a New Mexico court of competent jurisdiction in accordance with Section 38-3-1 (G) NMSA 1978. By execution of this Agreement, Contractor acknowledges and agrees to the jurisdiction of the courts of the State of New Mexico over any and all lawsuits arising under or out of any term of this Agreement.

21. Workers Compensation.

The Contractor agrees to comply with state laws and rules applicable to workers compensation benefits for its employees. If the Contractor fails to comply with the Workers Compensation Act and applicable rules when required to do so, this Agreement may be terminated by the City.

22. Professional Liability Insurance.

Contractor shall maintain professional liability insurance throughout the term of this Agreement providing a minimum coverage in the amount required under the New Mexico Tort Claims Act. The Contractor shall furnish the City with proof of insurance of Contractor's compliance with the provisions of this section as a condition prior to performing services under this Agreement.

23. Other Insurance

If the services contemplated under this Agreement will be performed on or in City facilities or property, Contractor shall maintain in force during the entire term of this Agreement, the following insurance coverage(s), naming the City as additional insured.

A. **Commercial General Liability** insurance shall be written on an occurrence basis and be a broad as ISO Form CG 00 01 with limits not less than $2,000,000 per occurrence and $2,000,000 in the aggregate for claims against bodily injury, personal and advertising injury, and property damage. Said policy shall include broad form Contractual Liability coverage and be endorsed to name the City of Santa Fe their officials, officers, employees, and agents as additional insureds.

B. **Business Automobile Liability** insurance for all owned, non-ownedautomobiles, with a combined single limit not less than $1,000,000 per accident.

C. **Broader Coverage and Limits.** The insurance requirements under this Agreement shall be the greater of (1) the minimum coverage and limits specified in this Agreement, or (2) the broader coverage and maximum limits of coverage of any insurance policy

or proceeds available to the Named Insured. It is agreed that these insurance requirements shall not in any way act to reduce coverage that is broader or that includes higher limits than the minimums required herein. No representation is made that the minimum insurance requirements of this Agreement are sufficient to cover the obligations of Contractor hereunder.

D. Contractor shall maintain the above insurance for the term of this Agreement and name the City as an additional insured and provide for 30 days cancellation notice on any Certificate of Insurance form furnished by Contractor. Such certificate shall also specifically state the coverage provided under the policy is primary over any other valid and collectible insurance and provide a waiver of subrogation.

24. Records and Financial Audit.

The Contractor shall maintain detailed time and expenditure records that indicate the date; time, nature and cost of services rendered during the Agreement's term and effect and retain them for a period of three (3) years from the date of final payment under this Agreement. The records shall be subject to inspection by the City. The City shall have the right to audit billings both before and after payment. Payment under this Agreement shall not foreclose the right of the City to recover excessive or illegal payments

25. Indemnification.

The Contractor shall defend, indemnify and hold harmless the City from all actions, proceeding, claims, demands, costs, damages, attorneys' fees and all other liabilities and expenses of any kind from any source which may arise out of the performance of this Agreement, caused by the negligent act or failure to act of the Contractor, its officers, employees, servants, subcontractors or agents, or if caused by the actions of any client of the Contractor resulting in injury or damage to persons or property during the time when the Contractor or any officer, agent, employee, servant or subcontractor thereof has or is performing services pursuant to this Agreement. In the event that any action, suit or proceeding related to the services performed by the Contractor or any officer, agent, employee, servant or subcontractor under this Agreement is brought against the Contractor, the Contractor shall, as soon as practicable but no later than two (2) days after it receives notice thereof, notify the legal counsel of the City.

26. New Mexico Tort Claims Act

Any liability incurred by the City of Santa Fe in connection with this Agreement is subject to the immunities and limitations of the New Mexico Tort Claims Act, Section 41-4-1, et. seq. NMSA 1978, as amended. The City and its "public employees" as defined in the New Mexico Tort Claims Act, do not waive sovereign immunity, do not waive any defense and do not waive any limitation of liability pursuant to law. No provision in this Agreement modifies or waives any provision of the New Mexico Tort Claims Act.

27. Invalid Term or Condition.

If any term or condition of this Agreement shall be held invalid or unenforceable, the remainder of this Agreement shall not be affected and shall be valid and enforceable.

28. Enforcement of Agreement.

A party's failure to require strict performance of any provision of this Agreement shall not waive or diminish that party's right thereafter to demand strict compliance with that or any other provision. No waiver by a party of any of its rights under this Agreement shall be effective unless express and in writing, and no effective waiver by a party of any of its rights shall be effective to waive any other rights.

29. Notices.

Any notice required to be given to either party by this Agreement shall be in writing and shall be delivered in person, by courier service or by U.S. mail, either first class or certified, return receipt requested, postage prepaid, as follows:

To the City:
City of Santa Fe
Wastewater Management Division
73 Paseo Real
Santa Fe, New Mexico 87507
(505) 955-4650

To the Contractor(s):

1) Allied 360 Construction, LLC
Contact: Patrick Herrera, Managing Member/Owner
P.O. Box 1913
Espanola, NM 87532
Ph: (505) 470-5779
Email: patrickherrera@ymail.com

2) Sub-Surface Contracting, Inc.
Contact: Neal J. Keiper / Owner-President
27 Paseo de River
Santa Fe, NM 87507
Ph: (505) 473-1000
Email:

3) TLC Plumbing, Inc.
Contact: Eddie Padilla, Chief Dev. Officer
5000 Edith Blvd. NE
Albuquerque, NM 87107
Ph: (505) 761-9696
Email:

30. Authority.

If Contractor is other than a natural person, the individual(s) signing this Agreement on behalf of Contractor represents and warrants that he or she has the power and authority to bind Contractor, and that no further action, resolution, or approval from Contractor is necessary to enter into a binding contract.

IN WITNESS WHEREOF, the Parties have executed this Agreement as of the date of the signature by the required approval authorities below.

CITY OF SANTA FE:

ALAN WEBBER, MAYOR

DATE: Dec 9, 2021

ATTEST:

KRISTINE BUSTOS MIHELCIC,
CITY CLERK
GB MTG 12/08/2021

CITY ATTORNEY'S OFFICE:

Marcos Martinez
Marcos Martinez (Jul 28, 2021 09:10 MDT)
SENIOR ASSISTANT CITY ATTORNEY

APPROVED FOR FINANCES:

MARY MCCOY, FINANCE DIRECTOR
5000362.520150; 5000367.520150
Org. Name/Org#. AJH
AJH

CONTRACTOR:
TLC PLUMBING, INC.

NAME: Eddie C. Padilla

TITLE: Chief Development Officer

DATE: 8/23/21

CRS# 02-226090-000
BRN# 222153

IN WITNESS WHEREOF, the Parties have executed this Agreement as of the date of the signature by the required approval authorities below.

CITY OF SANTA FE:

ALAN WEBBER, MAYOR

DATE: Dec 9, 2021

ATTEST:

KRISTINE BUSTOS MIHELCIC,
CITY CLERK
GB MTG 12/08/2021

CITY ATTORNEY'S OFFICE:

Marcos Martinez
Marcos Martinez (Jul 28, 2021 09:10 MDT)
SENIOR ASSISTANT CITY ATTORNEY

APPROVED FOR FINANCES:

MARY MCCOY, FINANCE DIRECTOR
5000362.520150; 5000367.520150
Org. Name/Org#. AJH
AJH

CONTRACTOR:

SUB SURFACE CONTRACTING, INC.

NAME:

TITLE: PRESIDENT

DATE: 8-26-21

CRS# 02-104256-000
BRN# 46991

IN WITNESS WHEREOF, the Parties have executed this Agreement as of the date of the signature by the required approval authorities below.

CITY OF SANTA FE:

ALAN WEBBER, MAYOR

DATE: Dec 9, 2021

ATTEST:

KRISTINE BUSTOS MIHELCIC,
CITY CLERK
GB MTG 12/08/2021

CITY ATTORNEY'S OFFICE:

Marcos Martinez
Marcos Martinez (Jul 28, 2021 09:10 MDT)
SENIOR ASSISTANT CITY ATTORNEY

APPROVED FOR FINANCES:

MARY MCCOY, FINANCE DIRECTOR
5000362.520150; 5000367.520150
Org. Name/Org#. AJH
AJH

CONTRACTOR:
Allied 360 Construction, LLC.

NAME: Patrick Herrera
TITLE: Managing Member
DATE: 9/16/2021

CRS# 03-147576000-0
BRN# 231055

CITY OF SANTA FE
PURCHASING OFFICE
200 Lincoln Ave Room 122 Santa Fe, NM 87505
Fran Dunaway, CPO
21/46/B POTW On Call Repair and Replacement

	AWARDED ITEMS	1) Allied 360 Construction, LLC	2) Sub Surface Contracting, Inc.	3) TLC Plumbing, Inc.
ITEM #	ITEM & DESCRIPTION	PRICES	PRICES	PRICES
1	Point Repair, 6" to 8" pipe, remove and replace, 0' to 6 ' in depth including PVC pipe	$4,200.00	$3,550.00	$6,345.00
2	Point Repair, 6" to 8" pipe, remove and replace, 6' to 10' in depth including PVC pipe	$4,400.00	$4,650.00	$9,235.00
3	Point Repair, 6" to 8" pipe, remove and replace, 10' to 16' in depth including PVC pipe	$5,000.00	$8,300.00	$7,365.00
4	Point Repair Additional Cost for remove and replace, greater than 16' depth for 6" to 8" pipe including PVC pipe	$197.00	$1,685.00	$220.00
5	Point Repair, 10" to 15" pipe, remove and replace, 0' to 6 ' in depth including PVC pipe	$5,700.00	$4,450.00	$7,500.00
6	Point Repair, 10" to 15" pipe, remove and replace, 6' to 10' in depth including PVC pipe	$5,200.00	$6,700.00	$10,390.00
7	Point Repair, 10" to 15" pipe, remove and replace, 10' to 16' in depth including PVC pipe	$6,200.00	$9,350.00	$13,945.00
8	Point Repair Additional Cost for excavation greater than 16' depth for 10" to 15" pipe including PVC pipe	$239.00	$1,875.00	$220.00
9	Point Repair, 18" to 24" pipe, remove and replace, 0' to 6' in depth including PVC pipe	$7,600.00	$4,975.00	$11,250.00
10	Point Repair, 18" to 24" pipe, remove and replace, 6' to 10' in depth including PVC pipe	$8,600.00	$7,100.00	$13,255.00
11	Point Repair, 18" to 24" pipe, remove and replace, 10' to 16' in depth including PVC pipe	$9,500.00	$10,500.00	$16,810.00
12	Point Repair Additional Cost for excavation greater than 16' depth for 18" to 24" pipe including PVC pipe	$347.00	$1,875.00	$220.00
13	8" diameter SDR 26 PVC sewer pipe, furnish & place in open trench, complete in place.	$105.00	$75.00	$43.95
14	10" diameter SDR 26 PVC sewer pipe, furnish & place in open trench, complete in place.	$115.00	$85.00	$58.90
15	12" diameter SDR 26 PVC sewer pipe, furnish & place in open trench, complete in place.	$130.00	$95.00	$75.65
16	15" diameter SDR 26 PVC sewer pipe, furnish & place in open trench, complete in place.	$167.00	$105.00	$100.50
17	18" diameter SDR 26 PVC sewer pipe, furnish & place in open trench, complete in place.	$196.00	$125.00	$138.45
18	24" diameter SDR 26 PVC sewer pipe, furnish & place in open trench, complete in place.	$250.00	$140.00	$229.85
19	Trenching, Backfilling & Compaction for 8" to 10" diameter sewer pipe, 0' to 6' in depth, pipe not included, complete.	$25.00	$65.00	$64.20
20	Trenching, Backfilling & Compaction for 8" to 10" diameter sewer pipe, 6' to 10' in depth, pipe not included, complete.	$35.00	$85.00	$74.90
21	Trenching, Backfilling & Compaction for 8" to 10" diameter sewer pipe, 10' to 16' in depth, pipe not included, complete.	$47.00	$125.00	$109.20
22	Additional Cost for Trenching, Backfilling & Compaction greater than 16' depth for 8" to 10" pipe	$45.00	$255.00	$18.20
23	Trenching, Backfilling & Compaction for 12" to 15" diameter sewer pipe, 0' to 6' in depth, pipe not included, complete.	$60.00	$75.00	$64.20
24	Trenching, Backfilling & Compaction for12" to 15" diameter sewer pipe, 6' to 10' in depth, pipe not included, complete.	$75.00	$90.00	$74.90
25	Trenching, Backfilling & Compaction for 12" to 15" diameter sewer pipe, 10' to 16' in depth, pipe not included, complete.	$95.00	$140.00	$109.20
26	Additional Cost for Trenching, Backfilling & Compaction greater than 16' depth for 12" to 15" pipe	$110.00	$265.00	$19.85
27	Trenching, Backfilling & Compaction for 18" to 24" diameter sewer pipe, 0' to 6' in depth, pipe not included, complete.	$110.00	$80.00	$64.20

CITY OF SANTA FE
PURCHASING OFFICE
200 Lincoln Ave Room 122 Santa Fe, NM 87505
Fran Dunaway, CPO
21/46/B POTW On Call Repair and Replacement

	AWARDED ITEMS	1) Allied 360 Construction, LLC	2) Sub Surface Contracting, Inc.	3) TLC Plumbing, Inc.
ITEM #	ITEM & DESCRIPTION	PRICES	PRICES	PRICES
28	Trenching, Backfilling & Compaction for18" to 24" diameter sewer pipe, 6' to 10' in depth, pipe not included, complete.	$112.00	$95.00	$74.90
29	Trenching, Backfilling & Compaction for 18" to 24" diameter sewer pipe, 10' to 16' in depth, pipe not included, complete.	$125.00	$165.00	$136.50
30	Additional Cost for Trenching, Backfilling & Compaction greater than 16' depth for 18" to 14" pipe	$125.00	$275.00	$21.85
31	Pipe Displacement (bursting) 6" to 8" from M.H. to M.H.	$227.00	$498.00	$70.00
32	Pipe Displacement (bursting) 8" to 8" from M.H. to M.H.	$255.00	$585.00	$70.00
33	Pipe Displacement (bursting) 8" to 10" from M.H. to M.H.	$300.00	$610.00	$85.00
34	Traffic Control Residential –per Work Zone –per Day	$1,800.00	$1,220.00	$80.00
35	Traffic Control Non-Residential Major Collectors and Arterials – per Work Zone –per Day	$2,000.00	$1,395.00	$530.00
36	Asphalt Removal, Disposal & Replacement including 6" Base Course and 4" Asphalt	$2,250.00	$17,000.00	$7,550.00
37	Curb/Gutter Removal, Disposal and Replacement	$31.00	$80.00	$65.30
38	Sidewalk Removal, Disposal and Replacement	$41.00	$225.00	$98.45
39	New Manhole, 4' Diameter, type "C" or "E", 6' deep or less, including removal, disposal and restoration of surface, complete in place. Asphalt is separate bid item	$6,800.00	$6,500.00	$12,115.00
40	New Manhole, 4' Diameter, type "C" or "E", over 6' to 10' deep, including removal, disposal and restoration of surface, complete in place. Asphalt is separate bid item	$7,800.00	$8,500.00	$14,360.00
41	New Manhole, 4' Diameter, type "C" or "E", over 10' to 16' deep, including removal, disposal and restoration of surface, complete in place. Asphalt is separate bid item	$1,400.00	$12,000.00	$18,815.00
42	Additional Cost for depth greater than 16' depth for 4' Diameter Manhole	$1,100.00	$975.00	$560.00
43	New 12 inch thick Concrete Manhole Collar where none exists in Dirt Road or Easement area	$2,200.00	$1,550.00	$1,700.00
44	MH Wall Rehabilitation	$100.00	$600.00	$330.00
45	MH Inverts & Shelf Rehabilitation	$2,100.00	$2,400.00	$3,600.00
46	MH Inverts & Base Replacement	$6,200.00	$4,450.00	$20,370.00
47	Sewer Service Connection as part of a Point Repair/Open Trench	$4,250.00	$950.00	$4,320.00
48	Sewer Service Connection- as part of a Pipe Burst 0 to 6' in Depth including Asphalt Replacement.	$9,700.00	$1,450.00	$4,320.00
49	Sewer Service Connection- as part of a Pipe Burst 6' to 10' in Depth including Asphalt Replacement	$1,100.00	$1,825.00	$4,320.00
50	Sewer Service Connection- as part of a Pipe Burst 10' and Greater in Depth including Asphalt Replacement	$395.00	$4,800.00	$430.00
51	MH Cleaning (i.e. debris, roots, etc.)	$4,400.00	$1,275.00	$3,000.00
52	Adjust Existing MH F&C (from grade to 24" deep) including Concrete Collar (City Furnished F&C)	$4,200.00	$2,400.00	$3,800.00
53	Adjust Existing MH F&C (from 24" and deeper) including Concrete Collar(City Furnished F&C & Barrels)	$2,200.00	$2,850.00	$4,255.00
54	Easement Clearance and Grading for Access & Repair Work	$47.00	$250.00	$10.00
55	Rip Rap & Wire Mattress –New Installation	$5,000.00	$675.00	$800.00
56	Gabion Basket –New Installation	$1,100.00	$710.00	$650.00
57	4 to 6 inch Sewer Service Connection to Existing Manhole, 0 to 8 feet Deep -Core Drill	$1,200.00	$1,800.00	$3,415.00
58	4 to 6 inch Sewer Service Connection to Existing Manhole, Greater than 8 feet Deep -Core Drill	$2,400.00	$2,300.00	$340.00
59	Rock Excavation	$65.00	$375.00	$140.00
60	Select Fill Material-Delivered	$3,200.00	$1,295.00	$2,730.00

CITY OF SANTA FE
PURCHASING OFFICE
200 Lincoln Ave Room 122 Santa Fe, NM 87505
Fran Dunaway, CPO
21/46/B POTW On Call Repair and Replacement

	AWARDED ITEMS	1) Allied 360 Construction, LLC	2) Sub Surface Contracting, Inc.	3) TLC Plumbing, Inc.
ITEM #	ITEM & DESCRIPTION	PRICES	PRICES	PRICES
61	Smoke Testing-Supervisor	$14,000.00	$4,800.00	$10,000.00
62	Smoke Testing-Helper	$8,000.00	$3,600.00	$4,240.00
63	Smoke Testing Traffic Control Allowance	$5,000.00	$5,000.00	$5,000.00
64	Materials Testing - Allowance	$2,000.00	$2,000.00	$2,000.00
65	Street Cut Permits - Allowance	$2,000.00	$2,000.00	$2,000.00
	Total Base Bid Incl: allowances, mobilization, Demobilization, labor, materials, equipment, bonding, insurance, etc.	**$163,971.00**	**$166,293.00**	**$244,863.15**

Signature: P. Fred Heerbrandt, P.E.

Email: pfheerbrandt@ci.santa-fe.nm.us

TLCPLUM-01 CMONTOYA

CERTIFICATE OF LIABILITY INSURANCE

DATE (MM/DD/YYYY) 6/24/2024

THIS CERTIFICATE IS ISSUED AS A MATTER OF INFORMATION ONLY AND CONFERS NO RIGHTS UPON THE CERTIFICATE HOLDER. THIS CERTIFICATE DOES NOT AFFIRMATIVELY OR NEGATIVELY AMEND, EXTEND OR ALTER THE COVERAGE AFFORDED BY THE POLICIES BELOW. THIS CERTIFICATE OF INSURANCE DOES NOT CONSTITUTE A CONTRACT BETWEEN THE ISSUING INSURER(S), AUTHORIZED REPRESENTATIVE OR PRODUCER, AND THE CERTIFICATE HOLDER.

IMPORTANT: If the certificate holder is an ADDITIONAL INSURED, the policy(ies) must have ADDITIONAL INSURED provisions or be endorsed. If SUBROGATION IS WAIVED, subject to the terms and conditions of the policy, certain policies may require an endorsement. A statement on this certificate does not confer rights to the certificate holder in lieu of such endorsement(s).

PRODUCER License # 0757776 HUB International Insurance Services (SOW) 6565 Americas Parkway Suite 720 Albuquerque, NM 87110	CONTACT NAME: PHONE (A/C, No, Ext): (505) 828-4000 FAX (A/C, No): (866) 487-3972 E-MAIL ADDRESS: clarice.montoya@hubinternational.com
INSURED TLC Company Inc. 5000 Edith Blvd NE Albuquerque, NM 87107	INSURER(S) AFFORDING COVERAGE — NAIC # INSURER A : The Phoenix Insurance Company — 25623 INSURER B : Travelers Property Casualty Company of America — 25674 INSURER C : Associated Builders & Contractors of NM Merit Shop Workers Com INSURER D : INSURER E : INSURER F :

COVERAGES **CERTIFICATE NUMBER:** **REVISION NUMBER:**

THIS IS TO CERTIFY THAT THE POLICIES OF INSURANCE LISTED BELOW HAVE BEEN ISSUED TO THE INSURED NAMED ABOVE FOR THE POLICY PERIOD INDICATED. NOTWITHSTANDING ANY REQUIREMENT, TERM OR CONDITION OF ANY CONTRACT OR OTHER DOCUMENT WITH RESPECT TO WHICH THIS CERTIFICATE MAY BE ISSUED OR MAY PERTAIN, THE INSURANCE AFFORDED BY THE POLICIES DESCRIBED HEREIN IS SUBJECT TO ALL THE TERMS, EXCLUSIONS AND CONDITIONS OF SUCH POLICIES. LIMITS SHOWN MAY HAVE BEEN REDUCED BY PAID CLAIMS.

INSR LTR	TYPE OF INSURANCE	ADDL INSD	SUBR WVD	POLICY NUMBER	POLICY EFF (MM/DD/YYYY)	POLICY EXP (MM/DD/YYYY)	LIMITS	
A	X COMMERCIAL GENERAL LIABILITY CLAIMS-MADE X OCCUR GEN'L AGGREGATE LIMIT APPLIES PER: POLICY X PRO-JECT LOC OTHER:	X	X	DT-CO-7W41389A-PHX-23	7/1/2024	7/1/2025	EACH OCCURRENCE DAMAGE TO RENTED PREMISES (Ea occurrence) MED EXP (Any one person) PERSONAL & ADV INJURY GENERAL AGGREGATE PRODUCTS - COMP/OP AGG	$ 1,000,000 $ 500,000 $ $ 1,000,000 $ 2,000,000 $ 2,000,000
B	AUTOMOBILE LIABILITY X ANY AUTO OWNED AUTOS ONLY SCHEDULED AUTOS HIRED AUTOS ONLY NON-OWNED AUTOS ONLY	X	X	810-6W400914-24-26	7/1/2024	7/1/2025	COMBINED SINGLE LIMIT (Ea accident) BODILY INJURY (Per person) BODILY INJURY (Per accident) PROPERTY DAMAGE (Per accident)	$ 1,000,000 $ $ $
B	X UMBRELLA LIAB X OCCUR EXCESS LIAB CLAIMS-MADE DED X RETENTION $ 10,000			CUP-6W550351-23-26	7/1/2024	7/1/2025	EACH OCCURRENCE AGGREGATE	$ 9,000,000 $ 9,000,000
C	WORKERS COMPENSATION AND EMPLOYERS' LIABILITY ANY PROPRIETOR/PARTNER/EXECUTIVE OFFICER/MEMBER EXCLUDED? (Mandatory in NH) Y / N: N If yes, describe under DESCRIPTION OF OPERATIONS below	N / A	X	EWC008469	12/31/2023	12/31/2024	X PER STATUTE OTH-ER E.L. EACH ACCIDENT E.L. DISEASE - EA EMPLOYEE E.L. DISEASE - POLICY LIMIT	$ 1,000,000 $ 1,000,000 $ 1,000,000
B	Instal Floater/BR			QT-630-6W945490-TIL-23	7/1/2024	7/1/2025	Builders Risk	6,000,000

DESCRIPTION OF OPERATIONS / LOCATIONS / VEHICLES (ACORD 101, Additional Remarks Schedule, may be attached if more space is required)

.

SEE ATTACHED ACORD 101

CERTIFICATE HOLDER

City of Santa Fe
P.O. Box 909
Santa Fe, NM 87504-0909

CANCELLATION

SHOULD ANY OF THE ABOVE DESCRIBED POLICIES BE CANCELLED BEFORE THE EXPIRATION DATE THEREOF, NOTICE WILL BE DELIVERED IN ACCORDANCE WITH THE POLICY PROVISIONS.

AUTHORIZED REPRESENTATIVE



ACORD 25 (2016/03) **© 1988-2015 ACORD CORPORATION. All rights reserved.**

The ACORD name and logo are registered marks of ACORD

Signature: John Dupuis (Oct 24, 2024 11:06 MDT)

Email: jedupuis@santafenm.gov

Signature:

Email: mldozier@santafenm.gov

3203058 TLC amed 1 packet to pay June invoices int FINAL FINAL

Final Audit Report 2024-10-24

Created:	2024-10-22
By:	JAMES EDWARDS (jwedwards@santafenm.gov)
Status:	Signed
Transaction ID:	CBJCHBCAABAAdTWKudN5_2RMfZfMoym5ML4T8-Pgc4F-

"3203058 TLC amed 1 packet to pay June invoices int FINAL FI NAL" History

Document created by JAMES EDWARDS (jwedwards@santafenm.gov)
2024-10-22 - 4:28:41 PM GMT- IP address: 63.232.20.2

Document emailed to ajhopkins@santafenm.gov ajhopkins@santafenm.gov (ajhopkins@santafenm.gov) for signature
2024-10-22 - 4:31:17 PM GMT

Email viewed by ajhopkins@santafenm.gov ajhopkins@santafenm.gov (ajhopkins@santafenm.gov)
2024-10-22 - 6:05:03 PM GMT- IP address: 104.47.65.254

Document e-signed by ajhopkins@santafenm.gov ajhopkins@santafenm.gov (ajhopkins@santafenm.gov)
Signature Date: 2024-10-22 - 6:05:47 PM GMT - Time Source: server- IP address: 63.232.20.2

Document sent to JoAnn Lovato (jdlovato@santafenm.gov) and Travis Dutton-Leyda (tkduttonleyda@santafenm.gov) for signature. One of them to sign
2024-10-22 - 6:05:51 PM GMT

Document e-signed by Travis Dutton-Leyda (tkduttonleyda@santafenm.gov)
Signature Date: 2024-10-22 - 8:50:14 PM GMT - Time Source: server- IP address: 63.232.20.2

Document emailed to John Dupuis (jedupuis@santafenm.gov) for signature
2024-10-22 - 8:50:18 PM GMT

Document e-signed by John Dupuis (jedupuis@santafenm.gov)
Signature Date: 2024-10-23 - 5:06:09 PM GMT - Time Source: server- IP address: 174.240.19.84

Document emailed to MICHAEL DOZIER (mldozier@santafenm.gov) for signature
2024-10-23 - 5:06:13 PM GMT

Email viewed by MICHAEL DOZIER (mldozier@santafenm.gov)
2024-10-24 - 3:38:37 PM GMT- IP address: 63.232.20.2

Document e-signed by MICHAEL DOZIER (mldozier@santafenm.gov)
Signature Date: 2024-10-24 - 3:39:02 PM GMT - Time Source: server- IP address: 63.232.20.2

Document emailed to EMILY OSTER (ekoster@santafenm.gov) for signature
2024-10-24 - 3:39:08 PM GMT

Email viewed by EMILY OSTER (ekoster@santafenm.gov)
2024-10-24 - 11:28:46 PM GMT- IP address: 104.47.64.254

Document e-signed by EMILY OSTER (ekoster@santafenm.gov)
Signature Date: 2024-10-24 - 11:30:06 PM GMT - Time Source: server- IP address: 63.232.20.2

Agreement completed.
2024-10-24 - 11:30:06 PM GMT

CITY OF SANTA FE

Date: October 1, 2024

To: Mayor Alan Webber
Governing Body
Finance Committee
Quality of Life Committee

Via: Eric Candelaria, ITT Department Director EC

From: Michelle A. Gurule, Contracts Administrator

Subject: **Cloud Storage and Maintenance of the City of Santa Fe AS400 Data**

Vendor Name: **Denovo**

Vendor Number: **3846**

ITEM AND ISSUE:
ITT Department respectfully request your review and approval of Addendum A Professional Services Agreement with Denovo Request for the Approval of Cloud Storage and Maintenance of the City of Santa Fe AS400 data in the total amount of $1,819,244.00 FY24 $343,508.00 FY25 $479,112.00 FY26 $498,312.00 FY27 $498,312.00 (Cloud Storage and Maintenance three years from date of final signature approval); (Denovo/ITT Department); (Eric Candelaria, edcandelaria@santafenm.gov, 505-955-5576)

- Cloud Storage and Maintenance of the City of Santa Fe AS400 data Upgrade $1,377,640.77-FY24 $343,504.77 FY25 $344,712.00 FY26 $344,712.00 FY27 $344,712.00
- Original Contract #23-0595
- Reason for amendment (Increase compensation $1,819,244.00)
- Date of original contract approval by Governing Body October 3, 2023

Action Requested: Approval of Contract

BACKGROUND AND SUMMARY:
The City of Santa Fe's current AS400 system has reached end of life. As of April of 2024, ITT will no longer be able to support or maintain the current AS400 System. Due to multiple departments still having a necessity for this system for multiple financial requirements and archive availability The City of Santa needs to establish a solution for continued support. Denovo will allow the data stored on the current system to be transferred and maintained through cloud storage and support. Allowing the City to continue daily financial duties and to archive necessary data.

PROCUREMENT METHOD:

The procurement method is the General Services Agreement (GSA) # GS-35F-0026Y which expires on October 16,2026.

Chief Procurement Officer Approval: _____ **Date:** Oct 22, 2024
Comment/Exceptions: NMSA 1978, Section 13-1-129, GSA

Supporting Information:

CONTRACT NUMBER:
The FY25 Munis contract number is 3204315

SOURCE/REVENUE: ☒**Expense** ☐**Revenue**

The funding source is:
Fund Name/Number: CIP Special Projects/Fund 325
Munis Org Name/Number: Enterprise Resource Planning/3253950
Munis Object Name/Number: Other Consulting/510340

Grant Manager / Accounting Officer Approval: No **Date:**
Comment/Exceptions: _____

Budget Officer Approval: Andy Hopkins **Date:** Oct 22, 2024
Comment/Exceptions: _____

CAPITAL ASSET (will this procurement result in a tangible item that costs more than $5,000?):

☐**Yes |** ☒ **No**

Repair or Replacement of Existing Equipment:

☐**Yes |** ☒ **No**

Capital Project:
(New and improvement projects that are going to cost $10,000 or more)
☐ **Yes |** ☒ **No**

Department Approvals:
IT Components: ☒ **Yes |** ☐ **No**
Vehicles: ☐ **Yes |** ☒ **No**
Facilities, Furniture, Fixtures, Equipment: ☐ **Yes |** ☒ **No**

Approval: Eric Candelaria (Oct 1, 2024 13:23 MDT) **Title: Department Director** **Date:**
Approval: _____ **Title:** _____ **Date:** _____
Comment & Exceptions: _____

Department Contract Administrator Contact Info: Michelle A. Gurule, magurule@santafenm.gov
505-955-5533

ATTACHMENTS:

Vendor's Quote
Certificate of Liability Insurance
Addendum A
Professional Contract

Denovo

Service Order 001 Addendum A
Item #23-0595

Customer:	City of Santa Fe	**Contact:**	Zarifa Dushdurova
Service Order Effective Date:	October 1, 2023	**Addendum Effective Date:**	August 15, 2024

This Addendum to Service Order 001 is by and between Denovo Ventures, LLC. ("Denovo") and City of Santa Fe "Customer" or "Client") (each a "Party" and collectively the "Parties").

1. Initial Term

The Initial Term is modified to forty-five (45) months and will expire on June 30, 2027.

2. Service Entitlement, Limitations and Options

1. The Enhancement Services row is replaced in the table in Section 2 of Attachment 001 of that Service Order 001:

- Enhancement Services	Included	1. For the period of July 1, 2024 through September 30, 2024 one hundred eighty (180 hours. 2. Effective October 1, 2024 three hundred (300) hours per quarter.	1. See Enhancement Services Rate Card. 2. Additional hours requires an amendment to the agreement in advance of the hours being provided.

3. Article 2 – Service Fees

Article 2 (b) is replaced as follows:

b. The monthly Service Fee is paid annually in advance based on the compensation table provided in Article 3 – Total Compensation.

4. Article 3 – Total Compensation

Article 3 is replaced as follows:

Effective with the Customer fiscal period beginning July 1, 2024, the table below outlines the total compensation for Customer fiscal periods excluding GRT.

Description	FY24	FY25	FY26	FY27	Total
	October 2023 - June 2024	July 2024 - June 2025	July 2025 - June 2026	July 2026 - June 2027	
Total Fees:	$343,508	$479,112	$498,312	$498,312	$1,819,244
NOTE: FY24 Fees have been paid.					

Total compensation for the four-year term not to exceed $1,819,244 excluding GRT.

This Addendum shall be and is hereby incorporated into SERVICE ORDER 001 for all intents and purposes, and except as otherwise stated herein, the terms, provisions and definitions of the SERVICE ORDER 001 shall continue to apply to this Addendum, as well as in the SERVICE ORDER 001. The SERVICE ORDER 001 is hereby ratified and approved in all respects except where inconsistent with the terms of this Addendum.

IN WITNESS WHEREOF, the Parties hereto have executed this Agreement by their duly authorized representatives as of the date set forth above.

City of Santa Fe

Signature

Name (Type / Print)

Title

Date

DENOVO VENTURES, LLC

Don Landrum
Don Landrum (Sep 28, 2024 20:55 CDT)

Signature

Don Landrum

Name (Type / Print)

Executive Vice President

Title

Sep 28, 2024

Date

IN WITNESS WHEREOF, the parties have agreed to this Amendment as of the date when it is executed by the parties, whichever signature occurs last.

CITY OF SANTA FE:

_____
ALAN WEBBER, MAYOR

ATTEST:

_____
GERALYN CARDENAS, INTERIM CITY CLERK

CITY ATTORNEY'S OFFICE:

Sep 30, 2024
ASSISTANT CITY ATTORNEY

APPROVED FOR FINANCES:

Emily K. Oster
EMILY OSTER, FINANCE DIRECTOR

Denovo

MASTER SERVICES AGREEMENT

This Master Services Agreement ("MSA"), dated as of the date of the last signature ("Effective Date") is by and between Denovo Ventures, LLC, a Colorado limited liability company ("Denovo") and The City of Santa Fe ("Customer" or "Client"), (each a "Party" and together the "Parties").

Customer desires to engage Denovo to provide certain products and services, and Denovo desires to provide such products and services, pursuant to the terms and conditions set forth herein.

NOW, THEREFORE, in consideration of the recitals and mutual covenants contained herein and other good and valuable consideration, the receipt and sufficiency of which are hereby acknowledged, the Parties to this MSA agree as follows:

1. ***Construction.*** This MSA sets forth the general terms and conditions of the Agreement. For each Service Denovo provides, there is a Service Order ("SO") or Statement of Work ("SOW") that sets forth more specifically the Services and Service Levels Denovo will provide the Customer. If the Customer requests any Services that require a software product license or purchase (whether from a third party or from Denovo), in addition to an SO or SOW, Denovo will provide a separate Order Document ("OD") and any applicable license or other agreements to be executed by the Customer. Each SO or SOW, combined with any applicable Change Orders and the MSA, shall constitute an independent contract, provided, however, that a default under any SO, SOW or Order Document shall constitute a default under all other outstanding SOs, SOWs, ODs, or other agreements executed between Denovo and Customer. Notwithstanding the foregoing, any ODs, as well as any license agreements and related documents executed in connection therewith, apply exclusively to the software and other products therein and shall not be part of this Agreement. To the extent there are inconsistencies between the MSA and the SO or SOW, the SO or SOW will govern and control over the MSA. The headings shall be disregarded in construing or interpreting the Agreement.

2. ***Definitions.*** Capitalized terms not otherwise defined herein or in the applicable SO, SOW or Change Order shall be defined as follows:

   a. ***AAA.*** American Arbitration Association.

   b. ***Aggregated Data.*** Any aggregated and statistical data derived from the operation of the Services, including, without limitation, the number of records in the Services, the number and types of transactions, configurations, and reports processed in the Services and the performance results for the Services.

   c. ***Agreement.*** Each SO or SOW, applicable Change Order, and other documents executed pursuant to the MSA, combined with the MSA.

   d. ***Audit.*** The access and audit of Denovo's records, facilities, and locations in which Denovo performs Cloud Services for Customer, Denovo equipment, Denovo software and supporting documentation of Denovo and its subcontractors.

   e. ***Change.*** The addition, subtraction, or change to any Services related to the Agreement; a change that results in increased or reduced Fees for applicable Services; changes to the Service Levels; or any other change to the Agreement.

   f. ***Change Order ("CO").*** A fully executed Change Order Request form that details the Change agreed to by the Parties.

   g. ***Change Order Request.*** A formal request submitted by one Party to the other for a Change to the Agreement.

   h. ***Connectivity.*** Customer is responsible for providing communication connectivity from Customer's network to the cloud services provided by Denovo.

   i. ***Customer Applications.*** All software programs, including any source code for such programs, that the Customer or the Customer's designated affiliates provide in connection with the Agreement.

j. ***Customer Care Portal.*** A web-based service that allows Customers to report problems, request information, and view system metrics.

k. ***Customer Data.*** Customer's Confidential Information and all text, files, images, graphics, information, data, illustrations, personal data, video, audio, photographs, and other content and material in any format, provided or uploaded by the Customer in connection with the Agreement (but not including Work Product, Denovo Intellectual Property, or any material provided by Denovo to Customer and later provided or uploaded by Customer).

i. ***Confidential Information.*** Any proprietary information or data (including the terms of the Agreement), internal business information including, without limitation, business plans, strategies, goals, financial statements, business methods and procedures, services provided, contractual arrangements, Customer and customer lists, work product, contact information, Trade Secrets (as defined below), and any other information designated as confidential by either Party.

m. ***Data Center Network.*** The portion of the Denovo network extending from the outbound port on the Customer edge device to the outbound port of the data center border router and includes Denovo managed switches, routers, and cabling.

n. ***Denovo Intellectual Property.*** All intellectual Property that was developed by Denovo or on Denovo's behalf prior to performance of, or independent of, the Agreement or that is generally applicable to or useable by any of Denovo's other customers or for its business in general regardless of when developed, or that Denovo may, in connection with the performance of Services hereunder, employ, provide, modify, create, or acquire or otherwise obtain rights in. As used herein, "Intellectual Property" means all concepts, ideas, recommendations, methods, methodologies, procedures, processes, know-how and techniques, templates, programs, trademarks and service marks, Trade Secrets, copyrights, patents, software, inventions, discoveries, software, the generalized features of the structure, sequence and organization of software, user interfaces and screen designs, development tools (including without limitation general purpose consulting and software tools), utilities and routines, logic, integrations, coherence and methods of operation of systems, and all other intellectual property and improvements to any of the foregoing .

o. ***Disaster.*** Any unplanned event or condition that renders Customer unable to use, for its intended computer processing and related business purposes, the Denovo Services, reasonably projected by both Customer and Denovo to last more than four (4) consecutive hours.

p. ***Disaster Declaration Notice.*** The notice which the Customer is to provide to Denovo upon the occurrence of a Disaster requesting access to and use the Service set forth herein of this Statement of Work. Any verbal declaration must be followed by written or email notice within twenty four (24) hours of the Disaster Declaration Notice.

q. ***Dispute.*** Any dispute, claim, or controversy arising out of or relating to the negotiation, execution, and performance of the Agreement, including without limitation any alleged contractual, statutory, or tort claims, regardless of whether such claims are brought at law or in equity, and any dispute regarding the arbitrability of such issues as set forth in the Dispute Resolution section below.

r. ***Effective Date.*** The date the MSA, SO, SOW, OD, or CO is executed and goes into effect.

s. ***Expenses.*** Reasonable out-of-pocket expenses that Denovo incurs in connection with the Services, including, without limitation, all reasonable travel, meal, lodging, and mileage expenses.

t. ***Fees*** or ***Charges.*** Any fees or charges for the Services or products described in the Agreement.

u. ***Incident.*** An unplanned interruption or reduction in the quality of Services which is classified according to the severity levels set forth in the SO or SOW.

v. ***Infringement Claim.*** Third party claims against the Customer that any Work Product or Denovo Intellectual Property infringes a presently existing United States copyright, patent or trademark or constitutes misappropriation of unlawful disclosure or use of a third party's trade secrets under United States law.

w. ***Initial Term.*** The period from the Effective Date through the duration of the initial MSA, SO or SOW.

x. ***Late Charge.*** The lesser of (i) one- and one-half percent (1.5%) per month or (ii) the highest rate allowable by law, in each case compounded monthly to the extent allowable by law.

y. ***Law.*** Any declaration, decree, directive, legislative enactment, order, ordinance, regulation, rule, or other binding restriction of or by any federal, state, municipal, local, territorial, or other governmental department, regulatory authority, judicial or administrative body, whether domestic, foreign, or international.

z. ***Order Document ("OD").*** An agreement between Denovo and the Customer that describes the specific software and other products that Customer will license or purchase from Denovo or a third party, as well as related terms and conditions. Each Order Document, as well as any license or other agreement executed in connection therewith, is separate from any SO or SOW provided by Denovo and this Agreement.

aa. ***Patches.*** All patches, bug fixes, updates, maintenance, and service packs necessary for the function and security of the Services.

bb. ***Planned Maintenance.*** Total minutes of planned maintenance in the month.

cc. ***Quarterly Period.*** A three (3) month period with the first period beginning on the first (1st) day of the month after the Effective Date of the Service and ending on the last day of the third (3rd) month. Unless the Termination Date is less than three (3) months, subsequent periods will have a duration of three (3) months.

dd. ***Service or Services.*** Generally, all of the services Denovo agrees to provide Customer as set forth in any applicable SO, SOW, or CO.

ee. ***Service Availability.*** The various specifics of services availability including, without limitation, uptime objectives and downtime credits, as more fully described herein.

ff. ***Service Levels.*** The service levels, if any, that Denovo will adhere to as set forth in the applicable SO or SOW.

gg. ***Service Level Credits.*** Credits to the Customer account for material failure to meet Service Level Objectives.

hh. ***Service Level Objectives.*** All the service level standards as defined in the SO or SOW that pertains to the Services.

ii. **Service Order or SO** . A document that sets forth more specifically the Services, Service Levels Denovo will provide the Customer, a schedule of Fees and Charges, as well as any further terms and conditions that may apply to the Services Denovo will provide the Customer.

jj. **Statement of Work or SOW.** A statement of work that sets forth more specifically the Services, Service Levels Denovo will provide the Client, a schedule of Fees and Charges, as well as any further terms and conditions that may apply to the Services Denovo will provide the Client

kk. ***Successive Term.*** The time the MSA, SO or SOW renews for as defined herein after the Initial Term.

ll. ***Term.*** The Initial Term and all Successive Terms.

mm. ***Termination Date.*** The date on which the Agreement is terminated or expires pursuant to the terms of the Agreement.

nn. ***Trade Secrets.*** Trade secrets as defined under C.R.S. § 7-74-102, including, without limitation, various computer systems and programs, techniques, developments, improvements, inventions, and processes that are, or may be,

produced in the course of the applicable Party's operations, including any other information not generally known concerning such Party or its operations, including products, suppliers, markets, sales, internal costs, costs, margins, profits, Customer needs and lists, and the pricing information made available in the Agreement or other information acquired, disclosed, or made known to employees or agents while in the employ of such Party, which, if used or disclosed by a party other than such Party, could adversely affect such Party's business or give competitors an advantage.

oo. ***Unplanned Downtime.*** Any time the Service is unavailable as measured by an automated probe (script) that will poll the Service, but does not include any time during which the Services or any Services component are not available due to (A) A failure or degradation of performance or malfunction resulting from scripts, data, applications, equipment, infrastructure, software, penetration testing, performance testing, or monitoring agents directed, provided or performed by Customer; (B) Planned outages scheduled or announced maintenance or maintenance windows, or outages initiated by Denovo at the request or direction of Customer for maintenance, activation of configurations, backups or other purposes that require the service to be temporarily taken offline; (C) Outages occurring as a result of any actions or omissions taken by Denovo at the request or direction of Customer; (D) Outages resulting from Customer equipment, or third party equipment not within the sole control of Denovo; (E) Outages due to system administration, commands, or file transfers performed by Customer users or representatives; (F) inability to access the Services or outages caused by Customer's conduct, including negligence or breach of Customer material obligations under the Agreement, or by other circumstances outside of Denovo's control; (G) Lack of availability or untimely response time of Customer to respond to incidents that require Customer participation for source identification and/or resolution, including meeting Customer responsibilities for any Services; or (H) Outages caused by failures or fluctuations in electrical, connectivity, network or telecommunications equipment or lines due to Customer conduct.

pp. ***Work Product.*** Any Intellectual Property, software modifications, enhancements and/or interfaces, together with related specifications, design documents, flow charts, documentation, training manuals, reports, and other tangible work product specifically developed by Denovo for the Customer in accordance with the Agreement, but not including Denovo Intellectual Property.

3. ***Services.*** Denovo shall provide the Services to Customer as set forth in the applicable SO or SOW on the terms and conditions set forth in the Agreement. The Services may include advice and recommendations, but all decisions in connection with the implementation of such advice and recommendations shall be the responsibility of, and made by, the Customer. The Services are exclusively for the use of the Customer and any of its employees or authorized users in accordance with the terms of the Agreement and may not be used by subsidiaries or other affiliates of the Customer unless specifically permitted by the Agreement. To the extent that the Services require the provision of third-party software or support, the Services shall be subject to the terms of Denovo's agreement with such third-party provider as well as Customer's agreement with such third-party provider and Denovo shall have no liability with respect to such third-party software or support, or with respect to Customer's agreement with such third-party provider, except as otherwise specifically stated in the Agreement.

4. ***Payment.***

a. ***Fees and Expenses.*** Each SO or SOW shall set forth the Fees that are to be paid to Denovo. In addition, each SO shall set forth the Expenses (or types of Expenses to the extent the amount of such Expenses aren't known) that are to be reimbursed by Customer in accordance with Denovo's standard travel and expense policies. .

b. ***Invoices.*** Denovo will provide Customer with an invoice pursuant to the schedule set forth in the SO or SOW, but not less often than monthly. Each invoice shall set forth the Fees and Expenses owed to Denovo in reasonable detail, the SO or SOW reference numbers, the cost of any products that are not included in a separate Order Document and, when applicable, the number of hours spent by Denovo personnel in providing the Services during the period invoiced and any accrued Late Charges. For Services that are invoiced on a regular reoccurring basis (for example, for Services that require a monthly fee), Denovo reserves the right, in its sole discretion, to prorate the initial payment(s) in order to ensure that Customer is subsequently billed on Denovo's regular billing cycle for such Services and to invoice such Services in advance. If invoiced items are disputed, Customer must notify Denovo within fifteen (15) days of invoice date. If notice of dispute is not received within fifteen (15) days of

invoice date, all items therein are deemed undisputed. Payment terms for all undisputed invoices or individual invoice items are net thirty (30) days from the date of invoice unless otherwise stated in the applicable SO or SOW.

c. ***Method of Payment.*** Unless otherwise agreed to in writing by both Parties, all amounts to be paid to Denovo under the Agreement shall be paid in U.S. dollars and may be made using electronic or automated clearing house (ACH), automatic bill pay mechanisms, or by federal wire transfer to the account or accounts designated in the applicable invoice. If no such account is designated in an invoice, payment should be made to the account below:

Denovo Ventures, LLC
ACH/Wire: First Citizens Bank
ABA/Routing: 053100300
Account: 1822000629
Beneficiary FCB Customer Account Name: Denovo Ventures, LLC
For international wire instructions please contact AR@Denovo-us.com

d. ***Finance Charges.*** If Denovo does not receive payment for invoices within thirty (30) days of the invoice date, the Late Charge shall accrue. Such Late Charge will be added to the following invoice and shall be due and payable immediately upon receipt of such invoice.

e. ***Taxes.*** Except for federal, state or local income taxes solely based on the income earned by Denovo, the Customer shall be responsible for all taxes in connection with the Agreement including any sales, use, excise, value-added, services, consumption and other taxes and duties assessed on the provision of Services, products or materials by Denovo to the Customer, on Denovo's charges to the Customer under the Agreement, and on any goods or services used or consumed by either Party in connection with the provision of Services under the Agreement.

5. *Term and Termination.*

a. ***Term.*** The Initial Term of this MSA is four (4) years following the Effective Date. Notwithstanding the MSA shall not terminate while any SO, SOW, OD, or CO remains in effect.

b. ***Termination for Cause by Either Party.*** In addition to any termination rights set forth in an SO or SOW regarding termination of such SO or SOW, either Party may terminate the Agreement (and all SO's, SOW's, OD's and other agreements between Customer and Denovo) for the other Party's material breach of the Agreement after giving at least thirty (30) days prior written notice identifying specifically the basis for such notice and referring to this Section of this MSA unless the breaching Party cures such breach within such thirty (30)-day period.

c. ***Termination for Cause by Denovo***. In addition to any termination rights set forth in an SO, SOW or OD regarding termination of such SO or SOW, Denovo may terminate the Agreement and this SO or SOW (and all SO's, SOW's, OD's and other agreements between Customer and Denovo) at any time immediately upon notice to Customer if (i) an outstanding invoice remains unpaid forty-five (45) days after its applicable due date, (ii) the Customer discloses Denovo's Confidential Information in violation of the Agreement, or (iii) the Customer misuses or modifies the Work Product, Denovo Intellectual Property or other deliverables in a manner that causes the infringement of any third party's intellectual property rights.

d. ***Termination for Insolvency.*** Either Party may immediately terminate the Agreement (and all SOs, SOWs, ODs, and other agreements) in whole or in part if the other Party:

i. Makes an assignment for the benefit of creditors, admits in writing its inability to pay debts as they mature, or ceases operating in the normal course of business.

ii. Has a receiver or trustee appointed by a court over the Party or any substantial part of the Customer's assets.

iii. Becomes insolvent or is unable to pay its debts as they become due.

iv. Authorizes, applies for or consents to the appointment of a trustee or liquidator of all or a substantial part of its assets or has proceedings seeking such an appointment commenced against it which are not terminated within ninety (90) days of such commencement.

v. Has any substantial part of its property subjected to any levy, seizure, assignment, or sale for, or by any creditor or governmental agency without said levy, seizure, assignment or sale being lifted, released, reversed or satisfied within ten (10) days.

vi. Flies a voluntary petition under any chapters of the United States Bankruptcy Code or any other insolvency law or an involuntary proceeding has been commenced by any Party against the Party under any one of the chapters of the United States Bankruptcy Code or any other insolvency law and (A) the proceeding has been pending for at least sixty (60) days; or (B) the Party has consented, either expressly or by operation of law, to the entry of an order for relief; or (C) the Party has been decreed or adjudged a debtor or equivalent.

e. ***Suspension.*** In the event that the Customer violates any material provision of the Agreement, Denovo may suspend any or all of the Services in addition to any other rights Denovo may have under the Agreement. Denovo will use reasonable efforts to restore the suspended Services promptly after Denovo determines, in its reasonable discretion, that the issues have been resolved or the situation has been cured.

6. ***Employment Matters.***

a. ***Denovo Staffing.*** Denovo shall assign personnel to the Customer account that possess the training, education, expertise, and skill levels appropriate for the Services to be provided by such personnel. Denovo reserves the right to determine which of its personnel shall be assigned to perform Services, and to replace or reassign such personnel during the Term; provided, however, that Denovo, subject to scheduling and staffing considerations, shall use good faith efforts to honor the Customer's request for or lawful objection to specific individuals.

b. ***Customer Staffing.*** Customer shall assign personnel to the performance of Customer responsibilities that possess the appropriate training, education, expertise, and skill levels to perform such Customer responsibilities. Customer reserves the right to determine which of its personnel shall be assigned to perform Customer responsibilities, and to replace or reassign such personnel during the Term; provided that, the Customer shall ensure that the performance by such personnel of Customer responsibilities does not adversely affect the ability of Denovo to perform its obligations under the Agreement.

c. ***Non-solicitation.*** Neither Denovo nor the Customer shall solicit for employment, offer employment to, employ or hire as an independent contractor the other Party's employees, agents, or subcontractors during the Term of the Agreement and for a period of twelve (12) months following expiration or termination of the Agreement except as may be agreed to in writing by both Parties. The Parties acknowledge that the damages caused by a breach of this Section would be difficult to ascertain. Therefore, if either Party violates the foregoing restriction, as the breaching Party's sole obligation and the non-breaching Party's sole and exclusive remedy, the breaching Party will pay the non-breaching Party two (2) times the solicited employee's current annual salary.

d. ***Independent Contractor.*** Denovo shall provide Services to Customer as an independent contractor, and nothing contained herein shall be construed to create a relationship of employer-employee or principal-agent between Denovo and Customer. Neither Party is, nor shall represent itself to be, an agent, partner, fiduciary, joint venture, co-owner or representative of the other.

7. ***Assignment and Subcontracting.***

a. Neither Party shall assign or subcontract any portion of the Agreement without the express and prior written consent of the other Party. Notwithstanding the foregoing, in the event of a merger, acquisition, or sale of substantially all its assets, or reorganization, Denovo may assign the Agreement or any portion thereof to a successor-in-interest or any affiliate of Denovo that has the ability to perform the assigned obligations and has agreed to do so in writing.

b. Notwithstanding Section 7(a), Denovo may subcontract any of its duties under the Agreement, including, without limitation, any SO, SOW or portion thereof, to a subcontractor in the ordinary course of business; provided, however, Denovo will remain liable to the extent provided herein for its performance under the Agreement.

8. ***Confidentiality.***

a. ***General.*** To the extent that either Party comes into possession of any Confidential Information of the other Party in connection with the Agreement or otherwise, such Party may use the Confidential Information of the other Party solely for the purposes of the Agreement and shall not disclose such Confidential Information to any third party without the prior written consent of the other Party.

b. ***Exclusions.*** Notwithstanding any provision herein to the contrary, Confidential Information shall not include information that (i) is or becomes publicly available (other than by breach of the Agreement), (ii) was disclosed to the receiving Party on a non-confidential basis from a source other than the disclosing Party, which the receiving Party reasonably believes is not prohibited from disclosing such information as a result of an obligation in favor of the disclosing Party, (iii) is developed by the receiving Party independent of and without reference to any Confidential Information of the disclosing Party, or was known by the receiving Party prior to any disclosure of such information made by the disclosing Party, in each case as evidenced by the receiving Party's written records, or (iv) is disclosed with the written consent of the owner of the Confidential Information.

c. ***Protection.*** Each Party shall maintain the confidentiality of the Confidential Information of the other Party using at least the same degree of care as it employs in maintaining the confidentiality of its own Confidential Information, but in no event less than a reasonable degree of care.

d. ***Remedies.*** If a Party discloses or uses (or threatens to use or disclose) any Confidential Information of the other Party in breach of the confidentiality protections under the Agreement, the other Party shall have the right, in addition to any other remedies available, to seek injunctive relief to enjoin such acts, as the Parties acknowledge that any other available remedies may be inadequate.

e. ***Compelled Disclosure.*** Notwithstanding the above, the receiving Party shall not be in violation of this confidentiality obligation with regard to a disclosure that was in response to a valid order of a court of competent jurisdiction, administrative agency or governmental body, or by any law, rule or regulation, or by subpoena, summons or any other administrative or legal process, or by applicable regulatory or professional standards, provided that the receiving Party provides the disclosing Party with reasonable prior written notice of such disclosure in order to permit the disclosing Party to seek confidential treatment of such information.

f. ***Trade Secrets.*** Denovo employs Trade Secrets that contain privileged or confidential commercial or financial information that would result in a competitive disadvantage if disclosed without prior permission by Denovo. Because it would cause irreparable harm to Denovo if any of its Trade Secrets were known to its competitors, to the extent that Customer learns any of Denovo's Trade Secrets, Customer shall not disclose or use such Trade Secrets in its own business or for the benefit of any party other than Denovo. In the event that the Customer is a public entity and awards a contract to Denovo, the Customer shall have the restricted right to disclose the entire contract dollar amount, however this disclosure shall not include itemized data or any Trade Secrets.

9. ***Ownership of Intellectual Property.***

a. ***Denovo Ownership.***

i. Denovo shall retain all right, title and interest in and to Denovo Intellectual Property.

ii. All rights, title and interest in Work Product shall vest in Denovo unless otherwise expressly provided in the applicable SO or SOW. Upon Customer's payment of all fees set forth in the applicable SO or SOW, Denovo shall grant to Customer a perpetual, irrevocable, worldwide, royalty-free, fully paid-up, nonexclusive, non-sublicensable license to the Work Product resulting from the Services. Customer shall use the Work Product in a manner and for the purposes for which it was designed and in accordance with the terms of this Agreement solely for its internal business purposes.

iii. Denovo shall own the Aggregated Data. Denovo may utilize the Aggregated Data for purposes of operating Denovo's business unrelated to the provision of Services hereunder, provided that Denovo shall not reveal any Customer Confidential Information.

iv. Except for any license expressly granted in the Agreement, neither the Customer nor any third party shall acquire any right, title, or interest in or to Denovo Intellectual Property or Work Product.

b. ***Customer Ownership.*** The Customer shall retain all right, title and interest in and to the Customer Data. Customer hereby grants to Denovo limited license to use the Customer Data solely to the extent necessary for Denovo to perform the Services hereunder.

10. *Indemnification.*

a. ***General.*** The Parties shall have the following general indemnity obligations:

Denovo shall defend and hold harmless the Customer and its officers, directors, members, managers, employees, subcontractors, and agents from and against:

(i) Infringement Claims so long as the Customer promptly notifies Denovo in writing of the Infringement Claims. Denovo shall provide such defense at its expense and will pay any costs or damages that may be finally awarded by a court of competent jurisdiction against the Customer. Denovo will not indemnify the Customer, however, if the Infringement Claim is caused by (i) the Customer's misuse or modification of the Work Product, Denovo Intellectual Property or other deliverables in a manner that causes the Infringement; (ii) the Customer's use of the Work Product, Denovo Intellectual Property or other deliverables in combination with any hardware, software or information not owned or developed by Denovo; (iii) the Customer's failure to use corrections or enhancements to such Work Product, Denovo Intellectual Property or other deliverables made available by Denovo, (iv) the Customer's distribution, marketing or use for the benefit of third parties of such Work Product, Denovo Intellectual Property or other deliverables or (v) information, specifications, software or materials provided by the Customer or a third party. If any Work Product is, or in Denovo's judgment is likely to become, the subject of an Infringement Claim, Denovo, at its expense and option, shall either (a) procure the right for the Customer to continue using it, (b) replace it with a non-infringing equivalent, (c) modify it to make it non-infringing, or (d) direct the return of the Work Product and refund to the Customer the Fees paid for such Work Product less a reasonable amount for the Customer's use of the Work Product up to the time of return. The foregoing constitutes the Customer's sole and exclusive remedy and Denovo's entire liability with respect to Infringement Claims.

(ii) Any and all losses arising from claims by third parties relating to bodily injury or death of any person or damage to real and/or tangible personal property directly caused by the gross negligence or willful misconduct of Denovo, its personnel or agents in connection with the performance of the Services under the Agreement.

b. ***Procedure.*** To receive any indemnities specified in this Section, the Party seeking indemnification must promptly notify the other Party in writing of a claim or suit and provide reasonable cooperation (at the indemnifying Party's expense) and full authority to defend or settle the claim or suit. The indemnifying Party shall have no obligation to indemnify the indemnified Party under any settlement made without the indemnifying Party's written consent.

11. *Limitation of Liability; Disclaimer of Warranties.* Unless otherwise specifically stated in an SO or SOW with respect to the Services described in, or products or software provided or licensed under, such SO or SOW, the following limitations of liability and disclaimers of warranties shall apply to the Agreement:

a. ***Limitation of Liability.*** IF DENOVO SHALL BE LIABLE TO THE CUSTOMER FOR ANY MATTER RELATING TO OR ARISING FROM THE AGREEMENT, WHETHER BASED UPON AN ACTION OR CLAIM IN CONTRACT, WARRANTY, EQUITY, NEGLIGENCE, INTENDED CONDUCT OR OTHERWISE, THE AGGREGATE AMOUNT OF DAMAGES RECOVERABLE AGAINST DENOVO WITH RESPECT TO ANY AND ALL BREACHES, PERFORMANCE,

NONPERFORMANCE, ACTS OR OMISSIONS HEREUNDER, OR ANY REASON WHATSOEVER, WILL NOT EXCEED THE AGGREGATE AMOUNT OF FEES ACTUALLY PAID BY THE CUSTOMER TO DENOVO UNDER THE SO or SOW PURSUANT TO WHICH DENOVO IS PERFORMING THE SERVICES OR SELLING THE PRODUCTS GIVING RISE TO SUCH BREACH.

b. ***Exclusion of Damages.*** IN NO EVENT SHALL EITHER PARTY OR ITS PERSONNEL BE LIABLE FOR CONSEQUENTIAL, SPECIAL, INDIRECT, INCIDENTAL, PUNITIVE OR EXEMPLARY DAMAGES, COSTS, EXPENSES, OR LOSSES (INCLUDING, WITHOUT LIMITATION, LOST PROFITS AND OPPORTUNITY COSTS) NOR SHALL THEY BE LIABLE FOR ANY CLAIM OR DEMAND AGAINST THE OTHER PARTY BY ANY THIRD PARTY EXCEPT AS OTHERWISE SPECIFICALLY STATED HEREIN. THE PROVISIONS OF THIS SECTION SHALL APPLY REGARDLESS OF THE FORM OF ACTION, DAMAGE, CLAIM, LIABILITY, COST, EXPENSE, OR LOSS, WHETHER IN CONTRACT, STATUTE, TORT (INCLUDING, WITHOUT LIMITATION, NEGLIGENCE), OR OTHERWISE.

c. ***Subcontractor Liability.*** The exclusions and limitations of liability under the Agreement will operate to the benefit of Denovo's subcontractors under the Agreement to the same extent that such provisions operate to the benefit of Denovo. Any limitations of liability hereunder will be computed for Denovo and its subcontractors in the aggregate. Denovo's subcontractors shall be deemed third-party beneficiaries of this Section.

d. ***Disclaimer of Warranties***. EXCEPT AS OTHERWISE SPECIFICALLY SET FORTH IN THE AGREEMENT, DENOVO MAKES NO REPRESENTATIONS OR WARRANTIES, EXPRESS, IMPLIED, STATUTORY, OR OTHERWISE, AND DENOVO CANNOT AND DOES NOT GUARANTY ANY RESULT OR THE EFFECTIVENESS OF THE SERVICES, WORK PRODUCTS, DENOVO INTELLECTUAL PROPERTY OR OTHER GOODS SOLD OR SOFTWARE LICENSED HEREUNDER. ANY SERVICES, WORK PRODUCT, DENOVO INTELLECTUAL PROPERTY OR OTHER GOODS SOLD OR SOFTWARE LICENSED HEREUNDER ARE PROVIDED "AS IS," AND ANY IMPLIED WARRANTY, INCLUDING WITHOUT LIMITATION ANY IMPLIED WARRANTY OF MERCHANTABILITY, FITNESS FOR A PARTICULAR PURPOSE OR NON-INFRINGEMENT IS EXPRESSLY DISCLAIMED. NOTWITHSTANDING ANYTHING HEREIN TO THE CONTRARY, THE WARRANTIES ARE NULL AND VOID IF THE SERVICES, WORK PRODUCTS, DENOVO INTELLECTUAL PROPERTY OR OTHER GOODS SOLD OR SOFTWARE LICENSED HEREUNDER HAVE BEEN MODIFIED, ALTERED, OR REPAIRED BY NON-DENOVO EMPLOYEES OR INDEPENDENT CONTRACTORS.

e. ***Third Party Agreements***. NOTWITHSTANDING ANY OTHER PROVISION IN THE AGREEMENT, DENOVO SHALL HAVE NO LIABILITY TO CUSTOMER UNDER ANY LICENSE OR OTHER AGREEMENT BY AND BETWEEN THE CUSTOMER AND A THIRD PARTY, REGARDLESS OF WHETHER SUCH LICENSE OR AGREEMENT RELATES TO DENOVO'S PROVISION OF SERVICES TO CUSTOMER.

12. *Insurance.* Denovo shall maintain insurance throughout the term of this Agreement providing a minimum coverage in the amount required under the New Mexico Tort Claims Act, and as outlined below. Denovo shall furnish the client with proof of insurance of Denovo's compliance with the provisions of this section as condition prior to performing services under this Agreement.

a. ***Business Automobile Liability.*** Covering all vehicles that Denovo owns, hires, or leases with a limit of no less than one million dollars ($1,000,000.00) per accident/employee.

b. ***Commercial General Liability.*** Including Contractual Liability Coverage, with coverage for products liability, completed operations, property damage and bodily injury, including death, with a minimum limit of no less than one million dollars ($1,000,000.00) each occurrence and a minimum limit of two million dollars ($2,000,000.00) in the aggregate.

c. ***Professional Liability Insurance.*** Including Errors and Omissions coverage with a limit of no less than five million dollars ($5,000,000.00) per occurrence and in the aggregate.

13. *Dispute Resolution.*

a. ***General.*** In the event of any Dispute, one Party shall notify the other Party in writing of the Dispute in sufficient detail to put the other Party on notice of the nature of the Dispute. The Parties shall work together in good faith

first to informally resolve the Dispute internally by escalating it as necessary to progressively higher levels of the administrative structure.

b. ***Mediation.*** If informal discussion fails, the Parties agree that any and all Disputes shall be submitted to the AAA, or its successor, for mediation prior to commencing arbitration proceedings. Either Party may commence mediation by providing AAA and the other Party a written request for mediation, setting forth the subject of the dispute and the relief requested. The mediation shall take place at the AAA office in Santa Fe, New Mexico. The Parties shall participate in the mediation in good faith and will share the costs equally. The Parties will cooperate in the selection of a mediator from the AAA panel of neutrals and the scheduling of the mediation proceedings. All offers, promises, conduct and statements, whether oral or written, made in the course of the mediation by any of the Parties, their agents, employees, experts and attorneys, and by the mediator or any AAA employees, are confidential, privileged and inadmissible for any purpose, including impeachment, in other proceeding involving the Parties, provided that evidence that is otherwise admissible or discoverable shall not be rendered inadmissible or non-discoverable as a result of its use in the mediation. All applicable statutes of limitation and defenses based upon the passage of time shall be tolled from the date of the written request for mediation until fifteen (15) days after the conclusion of mediation. The Parties will take such action, if any, required to effectuate such tolling.

14. ***Authority.*** Each Party represents and warrants to the other that (i) it is duly organized, validly existing and in good standing under the laws of the state in which it is organized or incorporated, (ii) it has all requisite power and authority to enter into the Agreement and to perform its obligations hereunder, and the execution of the Agreement, and (iii) it has been duly authorized to consummate the transactions contemplated in the Agreement.

15. ***Marketing.*** Denovo is allowed the nonexclusive use of the Customer's name, logo, trademarks, and service marks on Denovo's sales and marketing materials for presentation to current and prospective customers. Upon the Customer's request, Denovo will provide the Customer a copy of any such marketing materials in which the Customer is referenced. Notwithstanding the foregoing, Denovo will request written permission from Customer to use Customer's name, logo, trademarks, and service marks on Denovo's website or in media releases.

16. ***Law and Regulation.*** Each Party shall be responsible for obeying Laws applicable to its business, including, without limitation, data privacy, intellectual property, employment, and tax laws.

17. ***Change Order Process.*** A Change Order Request is the method by which either Party may communicate and eventually effectuate Changes to the Services outlined in the applicable SO or SOW. The Customer or Denovo may request Changes by initiating the Change Order process. To initiate the Change Order process, the Party requesting the Change must fill out the then-current Change Order Request form and submit it to the appropriate project leader of the other Party. The Change Order Request must at a minimum describe the requested Change in sufficient detail for Customer and Denovo to make a reasonable assessment of the request.

    a. The Customer and Denovo will review the CO promptly and follow up with each other as necessary for further clarification or to discuss the impact that the Change will have on the Services, deliverables, implementation schedule, Service Levels, terms and conditions, Fees, and other provisions of the Agreement. A CO will not be effective, nor will a Change be implemented unless the CO is executed by duly authorized representatives from both Customer and Denovo.

    b. Upon mutual acceptance of the CO, it becomes part of the entire Agreement between Denovo and Customer with respect to the subject matter thereof.

    c. Each Party will be responsible for all costs and expenses incurred by it in participation of the CO process unless otherwise agreed in writing. The failure of either Party to insist upon strict performance of the CO process for every Change shall not constitute a waiver of its rights as set forth in the Agreement, at law or equity.

17. ***Miscellaneous.***

    a. ***Modification.*** The Agreement may not be modified or amended except by a written instrument executed by or on behalf of each of the Parties to the Agreement which specifically states that it amends the Agreement.

b. ***Waiver.*** The failure of either Party to insist upon strict performance of any of the provisions contained in the Agreement shall not constitute a waiver of its rights as set forth in the Agreement, at law or in equity, or a waiver of any other provisions or subsequent default by the other Party.

c. ***Survival.*** The provisions of Sections 1, 2, 4, 6(c), 8, 9, 10, 11, 13, 15, and 17 shall survive, notwithstanding the termination or invalidity of the Agreement for any reason.

d. ***Entire Agreement.*** The Agreement, including, without limitation, any addenda, exhibits, attachments, supplements, SOs, SOWs, Change Orders and schedules, constitutes the entire agreement between Denovo and the Customer with respect to the subject matter hereof and supersedes all other oral and written representations, understandings or agreements relating to the Agreement.

e. ***Force Majeure.*** Except for payment of money, neither Party shall be liable for any delays or other non-performance resulting from circumstances or causes beyond its reasonable control, including, without limitation, acts, or omissions of the other Party or third parties, fire or other casualty, act of God, strike or labor dispute, war or other violence, or any law, order or requirement of any government agency or authority.

f. ***Notices.*** Wherever under the Agreement one Party is required or permitted to give notice to the other Party, such notice shall be in writing and shall be delivered personally, sent by facsimile transmission, sent by nationally recognized express courier, sent by certified mail (return receipt requested), or sent by email. Any such notice shall be deemed given when actually received and shall be addressed as follows:

If to Customer:	If to Denovo:
Attention: Edward J. Duran; ITT EAS/EUS Manager Email: ejduran@santafenm.gov City of Santa Fe ITT 200 Lincoln AVE Santa Fe, NM 87501	Attention: Legal Department Email: legal-notices@denovo-us.com Denovo Ventures, LLC. 371 Centennial Parkway Suite 200 Louisville, CO 80027 **With a copy to:** Attention: Andrew Roberts Email: andrew@sloanandroberts.com Sloan & Roberts, PLLC 5151 Belt Line Road, Suite 1050 Dallas, Texas 75254-6738 Phone: 214-987-6070 Fax: 214-987-6071

Either Party may change its address for notices upon giving written notice of the change to the other Party in the manner provided above.

g. ***No Third-Party Beneficiaries.*** Nothing contained in the Agreement is intended to confer upon any person (other than the Parties hereto, , and any subcontractors expressly mentioned elsewhere in the Agreement) any rights, benefits or remedies of any kind or character whatsoever, and, except as otherwise specifically stated herein, no person shall be deemed a third-party beneficiary under or by reason of the Agreement.

h. ***Counterparts.*** The Agreement may be executed in two (2) or more counterparts, each of which shall be deemed to be an original, but all of which together shall constitute one agreement binding on the Parties, notwithstanding that both Parties are not signatories to the original or the same counterpart. A facsimile or other electronic copy of a signature on the Agreement shall be acceptable as and deemed to be an original signature.

i. ***Severability.*** If any term or condition of the Agreement or the application thereof to any person(s) or circumstances is held invalid, such invalidity shall not affect other terms, conditions or applications which can be given effect without the invalid term, condition, or application. To this end, the terms and conditions of the Agreement are declared severable.

j. ***Governing Law; Jurisdiction.*** The Agreement shall be governed by, and construed in accordance with, the laws of the State of New Mexico (without giving effect to the choice of law principles thereof). To the extent any claim or dispute is not required to be submitted to binding arbitration under the terms of the Agreement, each Party hereby irrevocably consents and waives any objection to the personal jurisdiction and venue of the state and federal courts for the City and County of Santa Fe, New Mexico.

k. ***Legal Representation and Construction of Agreement.*** The Parties acknowledge that the Agreement was prepared by counsel for Denovo. The Parties have had the opportunity to retain their own independent legal and financial counsel with respect to the negotiation of the Agreement. They have independently, separately, and freely negotiated each and every provision of the Agreement as if all Parties drafted it, and therefore, waive any statutory or common-law presumption that would serve to have this document construed in favor of, or against, any Party.

l. Addendum. The terms and conditions attached as Addendum "A" are incorporated by reference, as if fully set forth in this Agreement.

IN WITNESS WHEREOF, Denovo and Customer have executed this Master Services Agreement as of the last date set forth below.

City of Santa Fe

By: _____

Name: Alan Webber

Title: Mayor

Date: Oct 3, 2023

DENOVO VENTURES, LLC

By: DocuSigned by: David MacGrandle

Name: David MacGrandle

Title: Chief Financial Officer

Date: 9/1/2023

Denovo

City of Santa Fe ADDENDUM

This Addendum is incorporated into the Master Services Agreement between DENOVO (DENOVO) and the CITY OF SANTA FE (CITY).

1. TERMINATION

This Agreement may be terminated by CUSTOMER upon 30 days written notice to the DENOVO in accordance with the terms of the Appropriations section below.

2. NEW MEXICO TORT CLAIMS ACT

Any liability incurred by CUSTOMER in connection with this Agreement is subject to the immunities and limitations of the New Mexico Tort Claims Act, Section 41-4-1, et. seq. NMSA 1978, as amended. CUSTOMER and its "public employees" as defined in the New Mexico Tort Claims Act, do not waive sovereign immunity, do not waive any defense and do not waive any limitation of liability pursuant to law. No provision in this Agreement modifies or waives any provision of the New Mexico Tort Claims Act.

3. APPROPRIATIONS

The terms of this Agreement are contingent upon sufficient appropriations and authorization being made by CUSTOMER for the performance of this Agreement. If sufficient appropriations and authorization are not made by CUSTOMER, this Agreement shall terminate upon written notice being given by CUSTOMER to DENOVO. The CUSTOMER's decision as to whether sufficient appropriations are available shall be accepted by DENOVO and shall be final.

4. RELEASE

DENOVO, upon acceptance of final payment of the amount due under this Agreement, releases the CUSTOMER, its officers and employees, from all liabilities, claims and obligations whatsoever arising from or under this Agreement. DENOVO agrees not to purport to bind CUSTOMER to any obligation not assumed herein by CUSTOMER unless DENOVO has express written authority to do so, and then only within the strict limits of that authority.

Signature Lines required:

City of Santa Fe:

Alan Webber, Mayor

Date: Oct 3, 2023

DENOVO:

DocuSigned by:
David MacGrandle
3333F72E6DE74D7...

David MacGrandle, CFO

Date: 9/1 /2023

Attest:

Geralyn Cardenas (Oct 3, 2023 13:45 MDT)

Kristine Bustos Mihelcic, City Clerk XIV

GB MTG 09/27/2023

City Attorney's Office:

Marcos Martinez

Marcos Martinez (Aug 30, 2023 16:22 MDT)

Senior Assistant City Attorney

Approved for Finances:

Emily K. Oster

Emily K. Oster (Oct 3, 2023 12:22 MDT)

Emily Oster, Finance Director

Denovo

SERVICE ORDER 001
Cloud Managed Application Services

Customer:	City of Santa Fe	**Contact:**	Edward J Duran
Address:	200 Lincoln Ave	**Phone Number:**	858-914-1934
City, State, Zip:	Santa Fe, New Mexico 87501	**Email Address:**	ejduran@santafenm.gov
MSA Referenced:	September 1, 2023	**Initial Term:**	48 Months
Effective Date:	10/1/2023	**Successive Term:**	Not Applicable
Pricing Valid Through:	09/30/2023		

This Service Order ("SO") is by and between Denovo Ventures, LLC. ("Denovo") and City of Santa Fe ("Customer" or "Client") (each a "Party" and collectively the "Parties") and is subject to the terms and conditions of the Master Services Agreement ("MSA") referenced above that has been executed by the Parties.

The Initial Term will begin on October 1st, 2023.

1. ***Service Entitlements***

   a. The Customer Applications and Service Descriptions are defined in Exhibit A. Specific Customer service selections and service units are set forth in the Attachments to Exhibit A. For the avoidance of doubt, if not expressly set forth in the Attachments to this Service Order as being provided by Denovo, Denovo is not obligated to provide such Services.

   b. Denovo's Standard Operating Processes, Service Level Agreements, Service Level Credits, and Other Terms are defined in Exhibit B.

   c. Denovo's Implementation and Onboarding Plan is provided in Exhibit C.

2. ***Service Fees and Pricing***

   a. The one-time Provisioning Fee of twenty-nine thousand seven hundred dollars ($29,700.00) is payable upon execution of this SO as consideration for Denovo providing the service resources and configuring the tenancy services for Customer as needed to establish Customer's Cloud Services environment.

   b. The minimum monthly Service Fee is: for the months of October 2023 and November 2023, fourteen thousand, three hundred sixty three dollars ($14,363), and (ii) for the months of December2023 through June 2027, twenty five thousand five hundred twenty-six dollars ($25,526.00).The minimum Monthly Service Fee is payable quarterly in advance during the Initial Term and any Successive Term, beginning October 1, 2023 and includes charges for the entitlements set forth herein. Any additional monthly Service Fees specified apply, respectively, on a monthly basis, to any usage for that month above those included entitlements.

   c. The minimum monthly Service Fee includes all of the Entitlements set forth in Attachment A including the initial Entitlement for Enhancement Services.

   d. A one-time Relicensing Fee of thirty-seven thousand seven hundred seven dollars and seventy-seven cents ($37,707.77) is payable upon execution of the Service Order. This Relicensing Fee will be waived if Customer executes this SO by September 30, 2023.

e. Customer will: (i) reimburse Denovo for all shipping, printing, copying, and other incidental services reasonably incurred by Denovo in providing the Services requested by Customer at cost; and (ii) pay Denovo, at agreed rates, for other additional expenses and services, including, but not limited to, travel (which shall be reimbursed based on Denovo's Travel Policy), hourly additional support or consulting services, remedy of Customer procedural use errors, additional telecommunications carrier charges provided by Denovo, all as may be agreed in advance by the Customer and Denovo ("Other Charges") and in accordance with the MSA. Other Charges shall be payable monthly, in arrears.

f. All Application Service Fee prices shall increase annually as of each anniversary of the Effective Date by the percentage increase in the Consumer Price Index – All Urban Consumers of the Bureau of Labor Statistics of the U. S. Department of Labor for U.S., for All Items with Base Years 1982-84=100 (the "CPI-U Index") over each such annual period. Those annual increases will be measured from the month for which the most recent index results are published at the time of adjustment.

g. At the conclusion of the Initial Term, Customer may, at its sole discretion (i) convert the Services to a ten (10) named user, read-only, archive environment, or (ii) renew this SO for a Successive Term at the then current minimum Monthly Service Fees; or (iii) terminate this SO. Options (i) and (ii) above require sixty (60) days' advance notice to Denovo, which shall be given through email or other written means. Should Customer elect to convert the Services under option (i) above, the archive environment, the minimum monthly Service Fee price shall be seven thousand four hundred fifty dollars ($7,450.00) per month which may have been adjusted from time to time as contemplated by the Agreement.

3. *Total Compensation*

The table below outlines the total compensation for Customer fiscal periods excluding GRT.

Description	FY24	FY25	FY26	FY27	Total
	Oct 2023 - June 2024	July 2024 - June 2025	July 2025 - June 2026	July 2026 - June 2027	
Onboarding Fees	$29,700	$0	$0	$0	$29,700
Monthly Service Fees	$207,408	$306,312	$306,312	$306,312	$1,126,344
Grand Total	**$ 237,108**	**$ 306,312**	**$ 306,312**	**$ 306,312**	**$1,156,044**

TOTAL COMPENSATION:

October 1, 2023 City of Santa Fe (FY24): $29,700.00 Implementation Fee
October and November 2023 (FY24): $14,363.00
December 2023 through June 2027 (FY24): $25,526.00
City of Santa Fe (FY24): $207,408 Nine Month Total
October through June, 2023 City of Santa Fe (FY24): $28,800.00 Monthly Service ($3,200/Month)
October 1, 2023 City of Santa Fe (FY24): $37,707.77 Waived if Signed by September 30, 2023

Total Compensation October 1, 2023, FY24: $305,797.00
Waived Fee on Licensing if Signed by September 30, 2023: ($37,707.77)

TOTAL FY24 COMPENSATION: $343,504.77 Excluding GRT

Compensation Year 2
July 1, 2024 City of Santa Fe (FY25): $306,312.00
July 1, 2024 City of Santa FE (FY25): $38,400.00

Denovo

TOTAL FY25 COMPENSATION: $344,712.00 Excluding GRT

Compensation Year 3
July 1, 2025 City of Santa Fe (FY26): $306,312.00
July 1, 2025 City of Santa FE (FY26): $38,400.00

TOTAL FY26 COMPENSATION: $344,712.00 Excluding GRT

Compensation Year 4
July 1, 2026 City of Santa Fe (FY27): $306,312.00
July 1, 2026 City of Santa FE (FY27): $38,400.00

TOTAL FY27 COMPENSATION: $344,712.00 Excluding GRT

Total compensation four-year term not to exceed: $1,377,640.77 Excluding GRT

IN WITNESS WHEREOF, Denovo and Customer have executed this SO as of the date set forth above.

City of Sante Fe By:	**DENOVO VENTURES, LLC** DocuSigned by: By: David MacGrandle
Name:	Name: David MacGrandle
Title:	Title: Chief Financial Officer
Date:	Date: 9/1/2023

Exhibit A
Service Description

1. ***Service Description***

Denovo will provide Customer with the Services as set forth in this SO. The Services are solely for use in accordance with the MSA by those persons identified by Customer who are authorized to use the Services ("Named Users"), in return for the consideration specified. Applicable limitations to the selected Services entitlements are set forth in the Attachments to this Service Description. For the avoidance of doubt, if not expressly set forth in the Service Entitlements or the Attachments to this Service Description as being provided, Denovo is not obligated to provide such Services.

1.1 Cloud Services.

i. Denovo will provide remote access to compute services, system software, communications, network services, and data storage such that Customer may perform their business operations using service resources described in this Service Description (the "Application" or the "Applications"). Except as otherwise indicated on those Attachments, Customer is responsible for licensing the Applications and supplying them to Denovo to be used in the provision of the Services.

ii. Denovo will select, provide, provision, and operate the computing hardware, system software, data storage, and other resources needed to make the Applications available to Customer at facilities selected and provisioned by Denovo (the "Cloud Service Resources"). Applicable limitations to the Cloud Services entitlements are set forth in the Attachments to this Service Description. Usage in excess of such entitlements will be provided at those fees for the applicable Cloud Service Resources which shall be specified in the Attachments to this Service Description.

iii. Denovo will be responsible for procuring and administering maintenance for the Cloud Service Resources. Changes made to products or release levels used in the Cloud Services will be completed in accordance with Denovo Change Enablement Services (defined herein).

1.2 Operations Services.

i. Denovo will operate the Cloud Service Resources at all times and on all days. The Applications supported by those Cloud Services Resources will be scheduled to be available to Customer at all times, except for when system maintenance may be conducted within the Maintenance Services Period (defined below). Customer's ability to access the Applications will be monitored continuously, with the exception of any "Maintenance Time".

ii. Denovo will perform Operations Services at all times and on all days. Operations Services consist of: (i) remedial and preventative maintenance of the Cloud Service Resources designed to minimize the occurrence and duration of any service degradation or interruption; (ii) responding to alerts generated by monitoring and surveillance, (iii) responding to service desk cases submitted by any Named User regarding problems with the Cloud Services Resources or problems completing tasks which previously completed successfully, and (iv) responding to Customer service requests.

iii. As part of its Operations Services, Denovo will review and manage the Applications at all times, on all days to maintain the configuration, integration, availability, performance, and stability of the Applications. Denovo shall provide incident resolution for performance problems, operations issues, and errors. These Services may also include (i) incident management, (ii) maintenance acitivities, (iii) monitoring, (iv) performance management, (v) code refreshes and data copies, and (vi) operations reporting.

iv. Denovo Operations Services includes the implementation of vendor-provided modifications and remedial "Patches" to address reported or discovered functionality problems. Denovo implements Patches in accordance with its Change Enablement Services in a commercially reasonable timeframe following its receipt of those Patches. Customer is responsible for separately procuring vendor-provided maintenance of the Customer provided Applications under terms permitting Denovo to request, receive, and administer that maintenance on Customer's behalf.

v. When authorized and enabled by Customer, and with Customer's assistance as may reasonably be required, Denovo will escalate Application software issues to the software provider and will manage thoses issues through resolution.

1.3 Database Support Services.

i. Denovo will install, configure, manage, and monitor relational databases, including those database administration tasks required to ensure the database fully meets the requirements of the Operations Services. Denovo will manage the physical database schema, structure, data definition, and database objects.

ii. Denovo will be responsible for administering maintenance as required to support the Database Operations Services. Changes made to products or release levels used in the Database Operations Services such as applying database patches, creating new instances, and stopping and starting database services will be completed in accordance with Denovo Change Enablement Services (defined herein).

1.4 Customer Support Services.

i. Customer will designate at least one (1) Service Coordinator. The Service Coordinator will designate those Customer personnel who are to be Authorized Contacts for the Customer Support Services. The Service Coordinator will promptly update designations for changes in the Authorized Contacts or to the extent of their access. Denovo will complete the following actions promptly, when properly requested by the Service Coordinator: (i) additions, deletions, or changes to Customer's list of "Authorized Contacts" (as defined above) and (ii) declarations of "Critical Processing Periods" (as defined below).

ii. Denovo will provide a Service Desk service staffed at all times and on all days. Denovo will receive and address all incident reports, service requests, and other adminstrative matters submitted to the Service Desk through accordance with the Service Level Targets.

1.5 Data Storage and Protection Services.

i. As set forth in this Service Description and its attachments Denovo will make available to Client appropriate data storage on which to store and maintain Applications data for use with the Applications.

ii. Denovo will create and manage backup copies of Applications data and software used in the Services in accordance with Denovo data backup and protection procedures associated with each Client workload. Data Storage and Protection Services include the offsite storage of backup copies of Applications data.

iii. Backup and data protection processes shall be conducted as to not impact the performance or processing of the Applications, or at a time mutually agreed upon by the Parties. Any applicable limitations to the Service Resources entitlements are set forth in the Attachments to this Service Description.

1.6 Security Services.

i. As set forth in this Service Description and its attachments Denovo will provide managed information security services. Denovo will provide the security tools, personnel, practices and policies to manage security.

a. Provide security services focused on prevention, mitigation, and recovery.
b. Manage perimeter / network security, firewall systems, and network intrusion detection systems.
c. Provide and manage vulnerability scanning of server instances and critical perimeter infrastructure including firewalls, routers, proxy and load balancers per Denovo standard operating procedures.
d. Provide host-based intrusion prevention and detection for internet facing server instances.
e. Provide and manage system anti-virus and malicious code prevention for all Microsoft Windows server instances.
f. Provide and manage host-based intrusion prevention and intrusion detection for all Linux / Unix server instances.
g. Provide and manage internal vulnerability scanning of server instances per Denovo standard operating procedures. Vulnerability scanning is performed continuously, consistent with the capabilities of the chosen service.
h. Provide security monitoring and continuous improvement using security related logs from firewalls, routers, intrusion detection, logs, and events.

1.7 Change Enablement Services.

i. Denovo will follow its defined Change Enablement Process in completing changes to the Services. This may include changes to products or release levels used in the Services. This may also include installing and implementing Application Patches ("Change Management Services").

ii. The Change Enablement Process will in include, at a minimum: (i) advance notification to the Service Coordinator of the change to be conducted, its work steps and expected timetable; (ii) preparation of a written change management plan which identifies the specific change, the Services components affected by the change, Denovo and Customer testing steps, a risk assessment, a recovery or back-out plan to include risk mitigation measures, (iii) submission of the change management plan to the Denovo Change Approval Board for approval prior to implementation; (iv) testing of changes in non-production environments or, if not practical, during time periods as approved by Customer; (v) coordination of the implementation of the change with the Service Coordinator; (vi) verification of the successful completion of the change with the Service Coordinator; and (vii) posting the results of the change to Denovo service management systems.

1.8 Maintenance Services.

i. Denovo will use its commercially reasonable and diligent efforts to perform maintenance on the Applications during the hours and days agreed to by Customer and set forth in this Service Description and its Attachments (the "Maintenance Services Period"). Denovo will notify Customer in accordance with its Change Enablement Services and then perform the specified maintenance on the Applications ("Maintenance Time").

ii. Denovo will provide advance notice of its planned activities during the Maintenance Services Period through its customer support procedures. Customer will be notified of the complete of the Maintenance Services by Denovo after those Applications used by the Customer have successfully completed validation and testing.

1.9 Functional Support Services

i. Functional Support Services consist of responding to Customer issues and questions regarding the functioning and use of the Applications and Cloud Services as submitted by Customer's "Authorized Contacts". The Service does not include the development or implementation of new functionality, new business locations, new business units, or new reports, programs, or objects.

ii. Denovo will provide the Functional Support Services through its Service Center ("SC") from 6:00 AM to 6:00 PM, Mountain Standard Time, Monday through Friday (the "Functional Support Hours"). The Service Coordinator (defined below) will provide Denovo with the names of up to five (5) Customer employees who have a substantial level of functional and procedural knowledge regarding Customer's use of the Applications. Functional Support Services are not provided on Denovo's holidays (which will not number more than ten (10) per calendar year).

iii. Denovo will complete the following actions promptly, when properly requested by the Service Coordinator: (i) additions, deletions, or changes to Customer's list of "Authorized Contacts" (as defined above) and (ii) declarations of "Critical Processing Periods" (as defined below).

iv. Critical Processing Periods. When notified by Client of occasions where Client is engaged in using the Services for critical business processes involving special efforts by Client including, but not limited to, such matters as acquisition activities, special payroll periods, fiscal year closes ("Critical Processing Periods"), Denovo will: (i) notify its operations and support personnel of those special efforts; (ii) avoid maintenance and downtime during that Critical Processing Period; and (iii) accelerate the response to incidents and service requests arising during that Critical Processing Period. The efforts of Denovo are subject to the availability of resources and Denovo's need to staff appropriately for its business generally. Client will promptly notify Denovo once the need for a Critical Processing Period is identified. Denovo reasonably expects Client to provide five (5) business days' notice in advance of a Critical Processing Period and expects that a Critical Processing Period shall not be more than forty-eight (48) hours in duration. Client will identify Critical Processing Periods only for events outside of typical, day-to-day performance of Client's work. Client is entitled to four (4) Critical Processing Periods per year.

1.10 Lifecycle Management Services.

i. Application Lifecycle Management Services consist of applying Technical Upgrades and Application Upgrades including database and operating system updates as required for the Applications. The request for such Services will be submitted by Customer's "Authorized Contacts"). These Services are scheduled based on availability. Typically, these Services must be scheduled sixty (60) days in advance.

ii. Denovo will perform "Technical Upgrades" consisting of new run time services (e.g., tools, environments) releases or versions of the run time services or supporting software issued by the vendor of that Application as part of its maintenance offering, typically indicated by a change in the numeric identifier of that run time services software. Denovo will apply Technical Upgrades in accordance with the Change Enablement Section of this Service Description. Customer is responsible for separately procuring vendor-provided maintenance of the Applications to be supplied by it under terms permitting Denovo to receive and administer that vendor-provided maintenance on Customer's behalf.

iii. Application Upgrades. Denovo will perform "Application Upgrades" consisting of functional programs (e.g., general ledger, payroll) releases or versions of the Application functional software issued by the vendor of that Application as part of its maintenance offering, typically indicated by a change in the numeric identifier of that Application software. Denovo will apply Application Upgrades in accordance with the Change Management Section of this Service Description.

iv. Customer is responsible for separately procuring vendor-provided maintenance of the Applications to be supplied by it under terms permitting Denovo to receive and administer that vendor-provided maintenance on Customer's behalf. Denovo is responsible for procuring and administering vendor-provided maintenance for any Applications to be supplied by Denovo.

v. Notwithstanding anything to the contrary contained herein or otherwise, Denovo will not be required to provide Customer with Lifecycle Management Services as provided in this Agreement if there are less than six (6) months remaining in the then current Term.

vi. The Service includes the project management, application technical (e.g., JD Edwards CNC, and at a minimum application net change training, and support for issues resolution. The Service may include application testing support and development retrofit support. If these Services are included, they will be defined in the Entitlements.

1.11 Disaster Recovery Services.

i. Disaster Recovery Services are invoked when an unplanned event or condition renders Denovo unable to provide the Cloud Services. Disaster Recovery Services provide for restoration of the Services as set forth in this Service Description through an encrypted network connection. The Recovery Time Objective ("RTO") defines the target amount of time that the Applications remain unavailable. The Recovery Point Objective ("RPO") represents the target point in time, prior to a Contingency Event, to which data can be recovered.

ii. Denovo will provide Disaster Recovery Services for the then current version of the Applications, excluding any elements that were in development or testing. In addition to the other services specified in this SOW, Disaster Recovery Services include monitoring and management of the target environment to include data replication management, synchronization management, audit reports, data latency and performance management, and internal testing and validation checks.

iii. With Client or in conjunction with other Clients, Denovo will schedule and conduct one (1) test per year of the Disaster Recovery Services. This will include the execution of failover if requested by Client, assist Client with validation of solution to include application functionality, record counts, etc., creation and management of Disaster Recovery Plan.

1.12 Enhancement Services.

i. Enhancement Services consist of assisting Customer with the implementation or use of functionality, application development, consulting services, and technology services for the Applications. The request for such Services will be submitted by Customer's Service Coordinator(s) or an Authorized Contact.

ii. Enhancement Services are based on Customer's commitment to consume the Service Entitlement during each calendar quarter (the "Quarterly Period"). Customer and Denovo shall use their commercially reasonable and diligent efforts to request and perform the services accordingly.

iii. Services consumed in excess of those entitled during any Quarterly Period Customer will be billed at the hourly rate defined Attachment 1 to this Service Description.

iv. Denovo shall provide a quarterly summary of Service Entitlements and the consumption of those Service Entitlements (the "Quarterly Report"). Each quarterly report shall include a summary of the items which consumed the Application Enhancement Services. This summary shall be provided to Customer promptly, through email or other written means.

1.13 Service Management.

i. Run Book. Denovo will create process documentation and procedures for the Services (the "Run Book"). These procedures will be reviewed periodically, or upon the mutual written agreement of the parties, and may be updated throughout them.

   a. The Run Book shall include, but is not limited to:

      1) Operational communication and process between Customer and Denovo teams.
      2) Customer support procedures to include reporting, escalation, and contact information.
      3) Key support roles to include Service Coordinators and Authorized Callers.
      4) Service Desk logging, ticketing, management, and reporting.
      5) Change Enablement communication and coordination.
      6) Data protection, backup, and restoration procedures.

   b. The parties agree that the Run Book will be materially complete ninety (90) days after the 'go live' or conversion to Denovo production services.

ii. Service Reviews. Customer and Denovo shall meet periodically at a manager or higher level to review matters related to their relationship and this Service Description ("Service Reviews").

   a. Service Reviews shall include, but are not limited to:

      1) Executive stakeholder alignment, performance review, and Customer goals review.
      2) Application and platform service availability.
      3) Activities review to include incident trends and service request trends.
      4) Professional services resources open projects.
      5) Recommendations for improvements in the delivery and use of the Services.
      6) Service Fees and charges.
      7) Pending renewal decisions.

   b. Unless waived at the sole discretion of Customer as indicated through email or other written means, the parties agree that the Service Reviews will be begin ninety (90) days after the 'go live' or conversion to Denovo production services.

1.14 End User Services.

i. Denovo will provide workstation and / or desktop management, monitoring, patching, and imaging as may reasonably be required for Customer's business purposes.

ii. Incidents and service requests related to these workstation / desktop services shall be accessed through the SDaaS functions defined herein.

iii. Customer and Denovo will proceed in good faith to define the catalog of services and the required response time for each service catalog item (e.g., reimaging a desktop or workstation).

iv. The Services include but are not limited to:

   a. Address Customer requests for installation, configuration, test, maintenance of workstation / desktop hardware and software components.

   b. Analyze and troubleshoot Customer workstation / desktop hardware and software problems.

c. Perform root cause analysis of equipment problems and provide effective diagnosis.

d. Respond to Customer requests in a timely and accurate manner

e. Maintain documentation of Customer standards, issues, and appropriate resolutions.

f. Provide support to Customer in system upgrades, installing workstations, and other office automation tools. On site activities shall generally be accomplished through the provision of Customer personnel as "remote hands".

g. Escalate complex issues to appropriate teams for resolution.

v. Patching is assumed to be done using automated tools and utilities.

vi. Monitoring of workstations and desktop computers includes basic device health and hygiene, including monitoring the presence and currency of endpoint detection software and services.

1.15 Network Managed Services (WAN).

i. Denovo will provide support for Customer wide area network, including Customer on premise equipment that directly enables that wide area network, including monitoring, patching, and updating as may reasonably be required for Customer's business purposes.

ii. Incidents and service requests related to these wide area network managed services shall be accessed through the SDaaS functions defined herein.

iii. Customer and Denovo will proceed in good faith to define the catalog of services and the required response time for each service catalog item (e.g., modifying a firewall rule).

iv. The Services include but are not limited to:

a. Address Customer requests for installation, configuration, test, maintenance of wide area network hardware and software components.

b. Analyze and troubleshoot Customer wide area network hardware and software problems.

c. Perform root cause analysis of equipment problems and provide effective diagnosis.

d. Respond to Customer requests in a timely and accurate manner

e. Maintain documentation of Customer standards, issues, and appropriate resolutions.

f. Provide support to Customer in wide area network upgrades, installing hardware, and other network management tools and utilities. On site requirements shall generally be accomplished through the provision of Customer personnel as "remote hands".

g. Escalate complex issues to appropriate teams for resolution.

v. Monitoring of wide area network devices includes basic device health and hygiene, including monitoring the critical capabilities of the devices.

vi. Operations Services for Microsoft Office 365 and telephone / public branch exchange (PBX) support are included on End User Support Services.

Denovo

1.16 Service Desk Services.

i. From its Service Desk or Customer Support Center, staffed on all days, at all times Denovo will:

   a. Respond to incidents and service requests.

   b. Develop with Customer response and escalation criteria based on the ITIL framework and Customer's assessment or designation of Customer impact and urgency.'

   c. Appropriately perform incident management activities consistent with the processes and procedures agreed to by the parties.

   d. Follow operator instructions as provided by Customer to remediate alerts and incidents.

   e. Escalate incidents to Customer personnel consistent with an escalation matrix published by Customer and updated from time-to-time.

ii. The services included in this Section 2.15 constitute the Service Desk Services ("SDaaS"). For the avoidance of doubt the SDaaS Services are applicable to all entitlements that are elected by Customer and to which Customer is entitled in this SO.

DocuSign Envelope ID: 6516CD1C-80F1-4090-B283-FDC0B386C382

Exhibit B
Standard Operating Procedures / Service Levels / Other Terms

Denovo's Standard Operating Procedures, Service Level Agreements, and Service Level Credits are defined below.

1. Customer Support Procedures

i. Authorized Customer users will communicate issues via phone or Customer Care Portal to the Service Desk by creating (or causing to be created) a support case. Each support case will be assigned a ticket number for tracking.

ii. At the time Denovo accepts a support case, Denovo will record an initial severity level of the support case based on the severity definitions included in the table below. Customer may reasonably increase the priority of incidents and service requests based on its assessment and explanation of the impact and urgency of those incidents and service requests.

iii. If, during the service process, the support case no longer warrants the severity level currently assigned based on its current impact on the production systems, then the severity level will be adjusted to the severity level that most appropriately reflects its current impact.

iv. Customers shall ensure that the assignment and adjustment of any severity level designation is accurate based on the current impact and urgency to business processing on the production systems. Customer acknowledges that Denovo is not responsible for any failure to meet performance standards caused by Customer's intentional misuse or misassignment of severity level designations.

v. Denovo personnel receiving the support case will communicate with the Customer promptly upon receipt that they have been assigned the Service ticket and are engaged to respond to and resolve the issue. This may result in the exchange of dialog / emails to further understand the issue. The support case will be worked according to Customer support tiers described below.

vi. Once a support case is resolved, it will be documented in the Denovo service desk and communicated to the individual who requested the support case. Customer will promptly use its reasonable efforts to confirm that the service case is resolved and, as appropriate, indicate to Denovo that the service case may be closed.

2. Service Level Agreement (SLA) – Service Desk Response and Resolution Target

i. Service Desk Services. The following Service Level Targets apply with respect to the following types of Service Desk Cases affecting Production Services, provided that the inability to access or use is not caused by a software failure or malfunctions or events which are outside Denovo's Immediate Control (as defined below):

Issue Definition	Priority	Service Level Targets
The inability for a majority of the Named Users to access or use one (1) or more of the Applications through the Services for a period longer than five (5) consecutive minutes due to the failure of a service resource or component not caused by Customer's unauthorized or improper use. Customer and Denovo will participate in discussions regarding the cause and effect of each such incident to identify appropriate preventative, risk mitigation, and similar responsive measures.	Priority One (1)	Denovo (i) will respond to Customer within fifteen (15) minutes after Customer reports a Priority One (1) incident and (ii) will target resolution of the Priority One (1) incident within two (2) hours following that report.
The inability of more than one (1) Named User to access or use one (1) or more of the Applications through the Services for a period longer than five (5) consecutive minutes due to the failure of a service resource or component not caused by Customer's unauthorized or improper use or (ii) existing Application functionality does not operate properly for a critical Customer business function due to the failure of a service resource or component not caused by Customer's unauthorized or improper use.	Priority Two (2)	Denovo (i) will respond to Customer within one (1) hour after Customer duly reports a Priority Two (2) incident and (ii) will target resolution of the Priority Two (2) incident within eight (8) hours following that report.
The verified occurrence in which Service response time is slow, accessibility is materially restricted for a period longer than five (5) consecutive minutes, or existing Application functionality does not operate properly due to the failure of a service resource or component not caused by Customer's unauthorized or improper use.	Priority Three (3)	Denovo (i) will respond to Customer within twelve (12) hours after Customer reports a Priority Three (3) incident and (ii) target resolution of the Priority Three (3) incident within twenty four (24) hours following that report.
A request for functional assistance with an application (subject to Customer entitlements), or other requests related to the performance of the Services by Denovo, excluding administrative requests.	Priority Four (4)	Denovo (i) will respond to Customer within twenty-four (24) hours after Customer reports a Priority Four (4) incident and (ii) will target resolution of the Priority Four (4) incident within forty-eight (48) hours following that report.

ii. Service Desk Priority is based on Customer's good faith assessment of impact and urgency in accordance with the Issue Definition in the table above.

iii. All service requests will be entered as a Priority Four (4) and will be subject to Denovo scheduling the Service. Administrative requests will be responded to promptly by Denovo.

3. *Service Level Agreement (SLA) – Cloud Application and Platform Services*

For Cloud Services in Denovo Private Cloud the following Service Levels will apply.

i. Commencing at the conversion or 'go live' date (defined as the date Customer accepts the Services and those Services are materially used by Customer in production business operations) and provided that Customer remains in compliance with the terms and conditions of the Agreement, Denovo will provide Customer with the Services in adherence with the Service Level Targets and procedures set forth herein.

ii. Commencing at Denovo's activation of the Customer's environment but excluding any time during which the Services or any Services Resources are not available for Maintenance Services, Denovo will make available the Service(s) described in this service Description, ninety-nine and one-half percent (99.5%) or greater, of the time in any calendar month during the Term of this Service Description ("Service Availability").

iii. Service Availability is calculated as the total number of minutes in the calendar month less the total number of minutes that the Applications are not available in that month, divided by the total number of minutes in the calendar month. For the absence of doubt this is:

$$\frac{\text{Total Minutes in Month} - \text{Minutes Not Available}}{\text{Total Minutes in Month}}$$

iii. The availability of the Services will be measured by commercially available and Denovo developed monitoring tools and utilities. This may include the ability to use the Services as required by the Applications including sample Applications transactions within the Services.

iv. Specifically excluded from the number of minutes that the Applications are not available are (i) planned interruptions to the Services including Maintenance Time, (ii) reasons of Force Majeure (as defined in the MSA), (iii) items outside Denovo's Immediate Control (as defined below); (iii) time associated with any misuse of the Services by Client or its authorized third parties, or (iv) time associated with a service interruption caused by an external security threat.

v. "Service Availability" will incorporate and apply only to those resources, items, or events in Denovo's Immediate Control. Immediate Control is defined as Denovo's network services to the Internet Service Provider ("ISP") circuit termination in Denovo's Cloud Services. Immediate Control excludes:

a. Customer's data and content.
b. Customer's desktop computer hardware.
c. Customer's network services which allow the Customer to access the Services.
d. the delivery, performance, and functionality of Applications software, support, and services provided by third party and Application software licensors.

vii. Any periods of service interruption initiated by Denovo at the request or direction of Customer that require the Services to be temporarily unavailable are excluded from the calculation of the Service Availability.

viii. Following the end of each calendar month, Denovo measures the Service Availability for the preceding month as defined in this SOW. Denovo will provide Client with access to this information promptly, through our customer portal.

ix. This portal will provide metrics on system availability for the Services purchased under this Service Description. Upon the Customers reasonable request, Customer will have the right to receive (i) reasonably detailed existing Denovo Service Level reports and measurement data from Denovo, and (ii) additional Service Level data and reports, such as the Customer may define and Denovo may have available.

4. Service Level Credits

In the event of a failure by Denovo to meet the Service Levels Service Description at Customer's request, Denovo shall provide Service Level Credits as follows:

i. First (1st) month of missed Service Availability: One (1) day's Service Fees for the applicable month for the affected Service.
ii. Second (2nd) consecutive month of missed Service Availability: Two (2) days' Service Fees for the applicable month for the affected Service.
iii. Third (3rd) consecutive month of missed Service Availability: Three (3) days' Service Fees for the applicable month for the affected Service.

iv. Fourth (4th) consecutive month of missed Service Availability: Four (4) days' Service Fees for the applicable month for the affected Service.

v. Fifth (5th) consecutive month of missed Service Availability: Five (5) days' Service Fees for the applicable month for the affected Service.

vi. Sixth (6th) consecutive month of missed Service Availability: Six (6) days' Service Fees for the applicable month for the affected Service.

To receive a Service Level Credit Customer must request that credit in writing to Denovo Customer Support within thirty (30) days after the occurrence of the failure to meet the Service Level Target. Valid Service Level credit requests will be applied to the Customer's next monthly invoice or, if timely requested after all invoices to become due hereunder have been paid, will be refunded by Denovo to Customer within thirty (30) days after receiving that valid request.

5. Other Terms

i. Any Change implemented by Customer that could affect the performance of Denovo's tools (i.e., management, monitoring, etc.) or Denovo's ability to monitor/manage/support the environment must be agreed to by both parties, in writing, prior to implementation.

ii. Customer shall advise Denovo of applicable regulatory requirements or obligations which may affect Denovo's provision of the Services.

iii. Denovo is not responsible for any interruption of the Services caused by other activities Customer directs, denial of Service attacks, national or worldwide incidents of computer viruses, natural disasters, changes resulting from government, political, or other regulatory actions or court orders, strikes or labor disputes, acts of civil disobedience, acts of war, acts against parties (including carriers and Denovo's other vendors), and other force majeure items as set forth in the Agreement provided that Denovo utilizes commercially reasonable efforts under the circumstances to minimize the impact of the force majeure event on the Customer.

iv. Customer will not use, or permit use of, the Services in a manner, which is (i) illegal; (ii) infringes the patent, copyright, trademark, confidential information, or intellectual property rights of a third party; or (iii) violates general standards of behavior on the Internet, collectively "Service Misuse". Customer shall be responsible for any such Service Misuse and indemnify Denovo, its employees, affiliates, agents, licensors, suppliers, and subcontractors against any liabilities arising from or relating to any such Service Misuse.

v. Customer's system will have potential security vulnerabilities, even with the Services, including, but not limited to, the vulnerability of Customer's network or systems to (i) access by persons within Customer's organization which exceeds the authority granted to such persons; (ii) snooper attacks by persons granted access by Customer to its network to obtain and misuse access codes, passwords and other data; (iii) physical access to equipment at Customer sites; and (iv) access to passwords and similar information that is written down or otherwise not afforded an appropriate level of protection by Customer. Denovo does not guarantee that the Services will eliminate all risk or prevent damage from network or system security breaches such as the above.

vi. Customer will supply Denovo personnel with reasonable accommodations and any physical or online access to any Customer facilities, personnel, locations, or networks as reasonably necessary to perform the Consulting Services. If it becomes necessary for Denovo personnel to be on-site at a Customer location, Denovo will give the Customer advance notice. Denovo will obey, and will ensure that all Denovo personnel obey, whenever on site at any Customer location or any other facility that is owned, leased, or operated by the Customer or any of its affiliates, all lawful, reasonable, and applicable rules and regulations as well as the Customer's reasonable policies, standards, and procedures, as such policies

are communicated in writing by the Customer to Denovo from time to time. The Customer will have the same obligations with regard it to its personnel on Denovo premises. Such rules and policies will not operate to materially change the terms of the Agreement. Denovo and Customer will each designate a point of contact for the Consulting Services and will work together to detail necessary project plans and approaches. Notwithstanding any other provisions herein, the Customer acknowledges that Denovo's ability to provide the Consulting Services is likely to be affected if Customer does not provide the necessary access and assistance, and Denovo shall have no liability for any delays or cost increases caused by the Customer's failure to provide such access and assistance.

vii. Customer is responsible for all third-party software licensing and maintenance and agrees to comply with all applicable third-party end-user license agreements.

viii. If it is necessary for Denovo to provide Time and Materials ("T&M") Services for additional Customer network discovery, the Denovo Professional Consulting Services group will provide a separate Statement of Work that defines timelines, tasks and the services rate per hour required to complete the work.

ix. This Service Description outlines the full breadth of Services to be provided by Denovo to Customer. Any omission of pre-requisites or need for additional services shall result in a Change Order Request, or support will be best effort on a next business day basis.

x. Any requested Change to the Customer's environment once it has been implemented may be subject to additional fees.

xi. Additional Services may be added or deducted via the Change Order Request process as defined in the MSA.

xii. This service description does not include any travel or out of pocket expenses, if required, to Customer's facility.

DocuSign Envelope ID: 6516CD1C-80F1-4090-B283-FDC0B386C382

Exhibit C
Implementation / Onboarding

Denovo will implement the Services specified in this Service Order. Our implementation methodology includes a defined set of activities and deliverables that facilitate a successful Customer onboarding. We perform these activities by leveraging our five (5) stage methodology. Our objective in this process is to execute each project stage successfully with a quality audit and formal signoff at the completion of each stage.

We estimate that the onboarding activities associated with this Service Order 001 will be complete approximately ninety (90) days after the Effective Date. The fees for the onboarding activities are included in the fees specified in Section 2. Service Fees and Pricing of this Service Order 001. Prior to the completion of the onboarding activities, Denovo shall use its commercially reasonable and diligent efforts to assist Customer with requests regarding the service components for which onboarding is not complete and accepted by Customer.

1. Planning
    a. Project Planning Workshop
    b. Technology Planning Workshop
    c. Infrastructure Planning Workshop
    d. Execute Customer Onboarding Workshop
    e. Quality Audit
    f. Stage Signoff

2. Provision
    a. Provision Required Compute for Monitoring
    b. Provision Stateless and Stateful Monitoring
    c. Execute Oracle Application Technology Assessment
    d. Execute Oracle Application Database Assessment
    e. Execute Oracle Application Functional Workshop(s)
    f. Establish Oracle Application Bellwethers (OLTP, Batch, etc.)
    g. Define Knowledge Asset / Operator Instruction Approach
    h. Create / Update Run Book
    i. Quality Audit
    j. Stage Signoff

3. Validate
    a. Execute Remediation from Oracle Application Technology Assessment
    b. Execute Remediation from Oracle Application Database Assessment
    c. Service Coordinator Definition and Assignment
    d. Validate Maintenance Window and Change Management Process
    e. Validate and Update Run Books
    f. Execute Cutover Planning Workshop
    g. Quality Audit
    h. Stage Signoff

4. Test
    a. Train Customer Service Coordinators
    b. Test Monitoring & Surveillance
    c. Test Patching
    d. Test Service Catalog Items (e.g., Password Reset)
    e. Update Run Books
    f. Quality Audit
    g. Stage Signoff

5. Deploy
    a. Change Advisory Board Processes
    b. Responsiveness Reporting
    c. Synchronous Communication Stakeholder Engagement
    d. Service Desk Surveys
    e. Update Run Books
    f. Project Closure

Denovo

Attachment A dated September 30th 10th, 2023, is attached to and made a part of the Service Order 001 Service Description dated as of September 30, 2023, by and between Denovo Ventures, LLC ("Denovo"), and City of Santa Fe ("Customer" or "Client").

1. Applications and Usage

The table below describes the Applications which will be supported by Denovo under this Service Description:

Applications / Platforms	Usage
Infrastructure and Platform Managed Services	As required for the following infrastructure and platform services: Up to five (5) iSeries logical partitions including up to: fifty-two thousand (52,000) Commercial Processing Workload (CPW), four hundred sixteen (416) gigabytes of memory, and nine (9) terabytes of direct attached, protected, block storage. Up to five (5) virtual machines including up to: six virtual CPUs (vCPUs) twenty-four (24) gigabytes of memory, and two (2) terabytes of direct attached, protected, block storage. Application Software: Licensed and provided by Customer. Database: Licensed and provided by Denovo. Hypervisor: VMware, Hyper-V / Azure Stack HCI, Oracle Linux Virtualization Manager, or IBM PowerVM licensed and provided by Denovo. Operating Systems: OS/400, Microsoft Windows, or Linux, licensed and provided by Denovo.

2. Service Entitlements, Limitations, and Options

In the table that follows:

Column 1 lists the Service Components and Options.

Column 2 Indicates whether the Service Component is included or excluded in the Services.

Column 3 lists the Service Units entitled or included in the Services.

Column 4 lists the additional monthly Service Fees that apply if more than the number of Service Units listed in Column 3 are provided at any time during the month.

Column 1	Column 2	Column 3	Column 4
Service Components and Options	Included / Excluded	Entitled Service Units	$ Per Additional Service Units
Cloud Services	Included	N/A	N/A
Operations Support	Included	N/A	N/A
Database Support Services	Included	Four (4 Database Instances	$750.00 / Additional

Column 1	Column 2	Column 3	Column 4
Service Components and Options	**Included / Excluded**	**Entitled Service Units**	**$ Per Additional Service Units**
			Database Instance or SID Managed
Customer Support Services	Included	One (1) Critical Process Period Per Calendar Quarter	$475.00 / Additional Critical Process Period Days / Calendar Quarter
Data Storage and Protection	Included	Up to eleven (11) TB of managed protected, and direct attached storage as specified above.	$250.00 / Additional TB of managed, protected, direct attached storage.
Security Services	Included	N/A	N/A
Change Enablement Services	Included	CAB Two (2) times / week. Additional as Needed for emergency changes.	N/A
Maintenance Services	Included	To be agreed to by the Parties during the Onboarding Services ("Maintenance Services Period")	N/A
Functional Support Services	Not Included	N/A	N/A
Application Lifecycle Management (ALM) Services. • Includes Development Retrofits • Includes Application Testing Support	Not Included	N/A	N/A
-		One (1) full Customer facing disaster recovery test per year.	
Disaster Recovery – Platform Managed Services: – Four (4) hour Recovery Point Objective – Twelve (12) hour Recovery Time Objective – Provided for JD Edwards World Production Environment	Included		N/A

Column 1	Column 2	Column 3	Column 4
Service Components and Options	**Included / Excluded**	**Entitled Service Units**	**$ Per Additional Service Units**
Application Environments: For JD Edwards World platforms, Denovo will provide one (1) production environment (set of runtime services) with one (1) production path code (set of objects) to be used for production (PD) services. For JD Edwards EnterpriseOne platforms Denovo will provide one (1) production environment (set of runtime services) with one (1) production path code (set of objects) to be used for production (PD) services and one (1) non-production environments (run time services), with one (1) non-production path code (set of objects) per environment, to be used for non production services.	Included	One (1) Production and Two (2) Non-production Application Environnements	$750.00 / Additional Environment and / or path code
Enhancement Services	Included	Sixty (60) Hours Per Calendar Quarter	See Enhancement Services Rate Card below.
Service Management	Included	N/A	N/A
End User Services	Not Included	N/A	N/A
Network Managed Services (WAN)	Not Included	N/A	N/A
Service Desk Services	Included	N/A	N/A
Onboarding Services	Included	As Set Forth on Exhibit C –	N/A
Telecommunications - Customer Provided Connectivity	Included	N/A	N/A
Telecommunications - Internet Bandwidth	Included	N/A	N/A
Applications Availability Target	Included	99.5%	N/A

Enhancement Services Rate Card

The Entitled Service Units for Enhancement Services is sixty (60) hours per calendar quarter beginning in October 2023. The minimum monthly Service Fee for the Enhancement Services is nine thousand six hundred dollars ($9,600.00). Beginning on October 1, 2024, and annually thereafter, Customer has the option to adjust its commitment for Entitled Service Units in accordance with the table below. Any such reduction shall adjust the minimum monthly Service Fees in accordance with the prices in that table as may be adjusted from time to time as contemplated in this Service Order.

Quarterly Enhancment Services Comitted Hours Entitlement	Entitled Service Units	Monthly Service Fees	Quarterly Service Fees	$ / Additional Service Units
Sixty (60) Hours	60	$ 3,200.00	$ 9,600.00	$ 160.00
Fifty (50) Hours	50	$ 2,750.00	$ 8,250.00	$ 165.00
Forty (40) Hours	40	$ 2,266.67	$ 6,800.00	$ 170.00
Thrity (30) Hours	30	$ 1,750.00	$ 5,250.00	$ 175.00
Fifteen (15) Hours	15	$ 900.00	$ 2,700.00	$ 180.00

Customer may exercise this option to adjust the Entitled Service Units for Enhancement Services one (1) time per calendar year, with sixty (60) days advance notice, to be received and confirmed by Denovo through email or other written means.

3. Access Methods

The Applications may be accessible through the (check as applicable):

_X_ client interfaces as supported by the Applications.
_X_ web browser interfaces as supported by the Applications.
_X_ mobile applications as supported by the Applications.
_X_ application programming interfaces (APIs) supported by the Applications.
_X_ database access including ODBC or JDBC read access.
___ other user interfaces supported by Denovo (specify): None.

4. Obligations of Customer:

Customer will acquire and provide the following items for use in connection with the Services:

All Applications, and vendor-provided maintenance for all Applications, except: None.
Other software and data: None.
Other software maintenance: None.
Hardware and other facilities: None.
Services and personnel: None.

IN WITNESS WHEREOF, the Parties hereto have executed this Agreement by their duly authorized representatives as of the date set forth above.

City of Santa Fe, NM	DENOVO VENTURES, LLC.
Signature	Signature
Alan Webber	David MacGrandle
Name (Type / Print)	Name (Type / Print)
Mayor	Chief Financial Officer
Title	Title
Oct 3, 2023	9/1/2023
Date	Date

Denovo

GSA U.S. General Services Administration

GENERAL SERVICES ADMINISTRATION
Federal Supply Service Authorized Federal Supply Schedule Price List

Multiple Award Schedule – Supplement No. 1 – Effective 9/24/2020

Code F: Information Technology
F03. – IT Services Subcategory

SIN 54151S **Information Technology Professional Services (previously SIN 132-51)**
SIN 54151ECOM **Electronic Commerce and Subscription Services (previously SIN 132-52)**

FSC D301	IT Facility Operation and Maintenance
FSC D302	IT Systems Development Services
FSC D304	Value Added Network Services (VANs)
FSC D304	E-Mail Services
FSC D304	Internet Access Services
FSC D304	Navigation Services
FSC D306	IT Systems Analysis Services
FSC D307	Automated Information Systems Design and Integration Services
FSC D308	Programming Services
FSC D310	IT Backup and Security Services
FSC D311	IT Data Conversion Services
FSC D313	Computer Aided Design/Computer Aided Manufacturing (CAD/CAM) Services
FSC D316	IT Network Management Services
FSC D317	Creation/Retrieval of IT Related Automated News Services, Data Services, or Other Information Services
FSC D399	Other Information Technology Services, Not Elsewhere Classified
FSC D399	Other Data Transmission Services, Not Elsewhere Classified - Except "Voice" and Pager Services

Denovo Ventures, LLC
6400 Lookout Road, Suite 101
Boulder, CO 80301
Phone: 877-433-6686
www.denovo-us.com

Contract Number: GS-35F-0026Y

Period Covered by Contract: **October 17, 2021 - October 16, 2026**

General Services Administration Federal Acquisition Service

Pricelist current through Modification #**A812** - Effective **February 5, 2020**.

Products and ordering information in this Authorized Information Technology Multiple Award Schedule Pricelist are also available on the GSA Advantage! System (http://www.gsaadvantage.gov).

CUSTOMER INFORMATION

1a. Awarded SINs:

Special Item Number	Description
54151S	Information Technology Professional Services – IT Professional Services and/or labor categories for database planning and design; systems analysis, integration, and design; programming, conversion and implementation support; network services, data/records management, and testing.
54151ECOM	Electronic Commerce and Subscription Services - Includes value added network services, e-mail services, Internet access services, electronic subscription services, data transmission services, and emerging electronic commerce technologies.

Note: Denovo Ventures, LLC wishes to participate under the Cooperative Purchasing and Recovery Purchasing programs. The following SINs are available to state and local governments:

1b. Lowest Priced Labor Categories: Senior Engineer

1c. See the Labor Category Descriptions section for descriptions of all corresponding job titles, experience, functional responsibility and education for the services offered.

2. Maximum order: The maximum order value for SINs 54151S, and SIN 54151ECOM is $500,000.

3. Minimum order: The minimum order to be issued is $100.00.

4. Geographic coverage: Domestic Delivery Only

5. Point(s) of production: Denovo Ventures, LLC offices

6. Discount from price list prices: Prices shown are NET Prices; Basic Discounts have been deducted.

7. Quantity Discounts: None

8. Prompt payment terms: 1% - Net 10 days from receipt of invoice or date of acceptance, whichever is later.

9a. Government purchase cards are accepted for payments equal to or less than the micro purchase threshold. In addition, bank account information for wire transfer payments will be shown on the invoice.

9b. The Contractor and the ordering agency may agree to use the credit card for dollar amounts over the micro-purchase threshold

10. Foreign items are not available on this contract.

11a. Time of delivery: To be negotiated between Denovo Ventures, LLC and the Ordering Agency.

11b. Expedited Delivery: Items available for expedited delivery are noted in this price list. They will be negotiated between Contractor and ordering Activity.

11c. Overnight and 2-day delivery: Neither Overnight nor 2-day delivery is available.

11d. URGENT REQUIREMENTS: When the Federal Supply Schedule contract delivery period does not meet the bona fide urgent delivery requirements of an ordering activity, ordering activities are encouraged, if time permits, to contact the Contractor for the purpose of obtaining accelerated delivery. The Contractor shall reply to the inquiry within 3 workdays after receipt. (Telephonic replies shall be confirmed by the Contractor in writing.) If the Contractor offers an accelerated delivery time acceptable to the ordering activity, any order(s) placed pursuant to the

agreed upon accelerated delivery time frame shall be delivered within this shorter delivery time and in accordance with all other terms and conditions of the contract.

12. F.O.B. Point: Destination

13a. Ordering address: Denovo Ventures, LLC
6400 Lookout Road, Suite 101
Boulder, CO 80301
cterry@denovo-us.com

13b. Ordering procedures: Ordering activities shall use the ordering procedures of Federal Acquisition Regulation (FAR) 8.405 when placing an order or establishing a BPA for supplies or services. These procedures apply to all schedules.

- FAR 8.405-1 Ordering procedures for supplies, and services not requiring a statement of work.
- FAR 8.405-2 Ordering procedures for services requiring a statement of work.

14. Payment address: Denovo Ventures, LLC
6400 Lookout Road, Suite 101
Boulder, CO 80301

15. Warranty provision: N/A

16. Export packing charges: N/A

17. Denovo accepts the Government Purchase Card for payments equal to or less than the micro purchase threshold. In addition, bank account information for wire transfer payments will be shown on the invoice.

18. Terms and conditions of rental, maintenance, and repair: N/A

19. Terms and conditions of installation: N/A

20. Terms and conditions of repair parts: N/A

20a. Terms and conditions for any other services: N/A

21. List of service and distribution points: N/A

22. List of participating dealers: N/A

23. Preventive maintenance: N/A

24a. Special attributes such as environmental attributes (e.g., recycled content, energy efficiency, and/or reduced pollutants): N/A

24b. If applicable, indicate that Section 508 compliance information is available on Electronic and Information Technology (EIT) supplies and services: N/A

25. Data Universal Number System (DUNS) number: 162891340

26. Notification regarding registration in System for Award Management (SAM) database. Denovo Ventures, LLC is registered in the www.SAM.gov database (formerly CCR).

Labor Category Descriptions

Senior Principal

Functional Responsibility:

- Perform analysis of client requirements and translate them into application specifications.
- Manage application implementations.
- Provide consulting services to the clients regarding integrated applications.
- Develop high-quality deliverables on time and within budget.
- Poses skills in designing and developing approaches to satisfy clients' business needs.

Education/ Experience Requirements: Bachelor of Arts or Bachelor of Science Degree in Computer Science, Information systems, Business, or related field or equivalent experience. Poses a minimum of eight years' experience implementing and supporting Enterprise Resource Planning (ERP) and/ or other Computer Systems.

Principal Engineer

Functional Responsibility:

- Apply enterprise-wide set of disciplines for planning, analysis, design, and development of
- systems for multiple installations or a major sector.
- Analysis of clients' processes, as well as adaptation of products to clients' needs.
- Transform client needs into project design specifications.
- Develop and administer client-designed Database solutions.
- Prepare detailed design documents.
- Understand development per generally accepted methodologies.
- Provide supervision and direction to staff on technical assignments in development and on
- project site.

Education/ Experience Requirements: Bachelor of Arts or Bachelor of Science Degree in Computer Science, Information Systems, Business, or related field or equivalent experience. Poses a minimum of five years in information systems development, functional and data requirements analysis, systems analysis, and program design. Experience managing implementation of information/ software engineering projects and either in systems design, programming, or DBA with knowledge/ experience in CASE tools/ methods, or functional experience performing business systems analysis working with Software applications products. Knowledge of Software technology. Poses leadership and/ or supervisory skills.

Senior Engineer

Functional Responsibility:

- Develop organization-wide information models for use in designing and building integrated,
- shared software, and database management systems.
- Apply Business Process Reengineering (BPR) to design, develop, and test the Software packaged
- goods application.
- Integrate applications.
- Ensure that project tasks are completed thoroughly and on time with the highest quality
- standards.
- Serve as the project team leader.
- Convert specifications into design, and convert design into deliverables on schedule.
- Perform quality assurance on all deliverables.

Education/ Experience Requirements: Bachelor of Arts or Bachelor of Science Degree in Computer Science, Information Systems, Business, or related field or equivalent experience. Poses a minimum of three years' experience in software applications, development, or functional experience performing business systems analysis working with Oracle applications products. Should poses specific industry experience. Solid ability to perform analysis and design. Experience managing project teams.

Awarded Pricelist

SIN 54151S Information Technology Professional Services

		Base Term				
Awarded GSA Labor Category	**Unit of Issue**	**GSA Hourly Rate w/ IFF - Year 1 (2021 - 2022)**	**GSA Hourly Rate w/ IFF - Year 2 (2022 - 2023)**	**GSA Hourly Rate w/ IFF - Year 3 (2023 - 2024)**	**GSA Hourly Rate w/ IFF - Year 4 (2024 - 2025)**	**GSA Hourly Rate w/ IFF - Year 5 (2025 -2026)**
Senior Principal	Hour	$240.20	$247.65	$255.32	$263.24	$271.40
Principal Engineer	Hour	$227.22	$234.26	$241.53	$249.01	$256.73
Senior Engineer	Hour	$207.74	$214.18	$220.82	$227.66	$234.72

SIN	Manufacturer	Part Number	Product Description	Unit of Issue	GSA Price w/ IFF	Warranty	COO
All of the following services include: Initial set up fees; Hardware and infrastructure costs; Technical managed services (backups, patches, technical tools and application upgrades); 24/7/365 help desk services; Functional support services; Development services; Oracle software; Ongoing training.							
54151ECOM	Denovo Ventures, LLC	101-001-WOI	JD Edwards EnterpriseOne Customer Relationship Management Suite, which includes:	Per User/ Per Month	$222.97	EULA	US
54151ECOM	Denovo Ventures, LLC	101-002-WOI	JD Edwards EnterpriseOne Advanced Pricing	Per User/ Per Month	$23.80	EULA	US
54151ECOM	Denovo Ventures, LLC	101-003-WOI	JD Edwards EnterpriseOne Branch Scripting	Per User/ Per Month	$3.70	EULA	US
54151ECOM	Denovo Ventures, LLC	101-004-WOI	JD Edwards EnterpriseOne Case Management	Per User/ Per Month	$24.61	EULA	US
54151ECOM	Denovo Ventures, LLC	101-005-WOI	JD Edwards EnterpriseOne CRM Foundation	Per User/ Per Month	$7.11	EULA	US
54151ECOM	Denovo Ventures, LLC	101-006-WOI	JD Edwards EnterpriseOne Customer Self Service	Per User/ Per Month	$11.25	EULA	US
54151ECOM	Denovo Ventures, LLC	101-007-WOI	JD Edwards EnterpriseOne Fulfillment Management	Per User/ Per Month	$47.00	EULA	US
54151ECOM	Denovo Ventures, LLC	101-008-WOI	JD Edwards EnterpriseOne Mobile Sales Inquiry	Per User/ Per Month	$7.61	EULA	US
54151ECOM	Denovo Ventures, LLC	101-009-WOI	JD Edwards EnterpriseOne Sales Force Automation	Per User/ Per Month	$12.89	EULA	US
54151ECOM	Denovo Ventures, LLC	101-010-WOI	JD Edwards EnterpriseOne Sales Order Management	Per User/ Per Month	$47.39	EULA	US
54151ECOM	Denovo Ventures, LLC	101-011-WOI	JD Edwards EnterpriseOne One View Reporting for Sales Order Management	Per User/ Per Month	$11.99	EULA	US
54151ECOM	Denovo Ventures, LLC	101-012-WOI	JD Edwards EnterpriseOne Service Management	Per User/ Per Month	$24.87	EULA	US
54151ECOM	Denovo Ventures, LLC	101-013-WOI	JD Edwards EnterpriseOne One View Reporting for Service Management	Per User/ Per Month	$11.99	EULA	US
54151ECOM	Denovo Ventures, LLC	101-014-WOI	JD Edwards EnterpriseOne Service Management Foundation	Per User/ Per Month	$4.31	EULA	US
54151ECOM	Denovo Ventures, LLC	101-015-WOI	JD Edwards EnterpriseOne Solution Advisor	Per User/ Per Month	$9.23	EULA	US
54151ECOM	Denovo Ventures, LLC	101-016-WOI	JD Edwards EnterpriseOne Manufacturing and Supply Chain Management Suite, which includes:	Per User/ Per Month	$669.07	EULA	US
54151ECOM	Denovo Ventures, LLC	101-017-WOI	JD Edwards EnterpriseOne Advanced Stock Valuation	Per User/ Per Month	$29.90	EULA	US
54151ECOM	Denovo Ventures, LLC	101-018-WOI	JD Edwards EnterpriseOne Agreement Management	Per User/ Per Month	$47.13	EULA	US
54151ECOM	Denovo Ventures, LLC	101-019-WOI	JD Edwards EnterpriseOne Apparel Management	Per User/ Per Month	$41.08	EULA	US
54151ECOM	Denovo Ventures, LLC	101-020-WOI	JD Edwards EnterpriseOne Blend Management	Per User/ Per Month	$47.13	EULA	US
54151ECOM	Denovo Ventures, LLC	101-021-WOI	JD Edwards EnterpriseOne Bulk Stock Inventory	Per User/ Per Month	$29.90	EULA	US
54151ECOM	Denovo Ventures, LLC	101-022-WOI	JD Edwards EnterpriseOne Configurator	Per User/ Per Month	$36.03	EULA	US
54151ECOM	Denovo Ventures, LLC	101-023-WOI	JD Edwards EnterpriseOne Demand Flow Manufacturing	Per User/ Per Month	$36.43	EULA	US
54151ECOM	Denovo Ventures, LLC	101-024-WOI	JD Edwards EnterpriseOne Demand Scheduling Execution	Per User/ Per Month	$47.52	EULA	US
54151ECOM	Denovo Ventures, LLC	101-025-WOI	JD Edwards EnterpriseOne Grower Management	Per User/ Per Month	$47.13	EULA	US
54151ECOM	Denovo Ventures, LLC	101-026-WOI	JD Edwards EnterpriseOne Grower Pricing and Payments	Per User/ Per Month	$47.00	EULA	US
54151ECOM	Denovo Ventures, LLC	101-027-WOI	JD Edwards EnterpriseOne Inventory Management	Per User/ Per Month	$47.52	EULA	US
54151ECOM	Denovo Ventures, LLC	101-028-WOI	JD Edwards EnterpriseOne One View Reporting for Inventory Management	Per User/ Per Month	$11.99	EULA	US
54151ECOM	Denovo Ventures, LLC	101-029-WOI	JD Edwards EnterpriseOne Manufacturing Management	Per User/ Per Month	$47.65	EULA	US
54151ECOM	Denovo Ventures, LLC	101-030-WOI	JD Edwards EnterpriseOne One View Reporting for Manufacturing Management	Per User/ Per Month	$11.99	EULA	US
54151ECOM	Denovo Ventures, LLC	101-031-WOI	JD Edwards EnterpriseOne Product Variants	Per User/ Per Month	$29.11	EULA	US
54151ECOM	Denovo Ventures, LLC	101-032-WOI	JD Edwards EnterpriseOne Quality Management	Per User/ Per Month	$15.99	EULA	US
54151ECOM	Denovo Ventures, LLC	101-033-WOI	JD Edwards EnterpriseOne Requirements Planning	Per User/ Per Month	$16.12	EULA	US
54151ECOM	Denovo Ventures, LLC	101-034-WOI	JD Edwards EnterpriseOne RFID Processor	Per User/ Per Month	$23.80	EULA	US
54151ECOM	Denovo Ventures, LLC	101-035-WOI	JD Edwards EnterpriseOne Transportation Management	Per User/ Per Month	$47.52	EULA	US
54151ECOM	Denovo Ventures, LLC	101-036-WOI	JD Edwards EnterpriseOne One View Reporting for Transportation Management	Per User/ Per Month	$46.74	EULA	US
54151ECOM	Denovo Ventures, LLC	101-037-WOI	JD Edwards EnterpriseOne Warehouse Management	Per User/ Per Month	$35.71	EULA	US
54151ECOM	Denovo Ventures, LLC	101-038-WOI	JD Edwards EnterpriseOne Supply Chain Planning (APS) Suite, which includes:	Per User/ Per Month	$51.53	EULA	US
54151ECOM	Denovo Ventures, LLC	101-039-WOI	JD Edwards EnterpriseOne Advanced Planning Agent	Per User/ Per Month	$3.81	EULA	US
54151ECOM	Denovo Ventures, LLC	101-040-WOI	JD Edwards EnterpriseOne Order Promising	Per User/ Per Month	$22.22	EULA	US
54151ECOM	Denovo Ventures, LLC	101-041-WOI	JD Edwards EnterpriseOne PDP Collaborative Web Client	Per User/ Per Month	$4.99	EULA	US
54151ECOM	Denovo Ventures, LLC	101-042-WOI	JD Edwards EnterpriseOne Production Scheduling	Per User/ Per Month	$13.12	EULA	US
54151ECOM	Denovo Ventures, LLC	101-043-WOI	JD Edwards EnterpriseOne Production Scheduling - Process	Per User/ Per Month	$13.12	EULA	US
54151ECOM	Denovo Ventures, LLC	101-044-WOI	JD Edwards EnterpriseOne Demantra Suite, which includes:	Per User/ Per Month	$71.73	EULA	US
54151ECOM	Denovo Ventures, LLC	101-045-WOI	JD Edwards EnterpriseOne Demantra Demand Management	Per User/ Per Month	$19.07	EULA	US
54151ECOM	Denovo Ventures, LLC	101-046-WOI	JD Edwards EnterpriseOne Option: Demantra Advanced Forecasting and Demand Modeling	Per User/ Per Month	$9.56	EULA	US
54151ECOM	Denovo Ventures, LLC	101-047-WOI	JD Edwards EnterpriseOne Option: Demantra Real-time Sales and Operations Planning	Per User/ Per Month	$13.02	EULA	US
54151ECOM	Denovo Ventures, LLC	101-048-WOI	JD Edwards EnterpriseOne Demantra Predictive Trade Planning	Per User/ Per Month	$18.94	EULA	US
54151ECOM	Denovo Ventures, LLC	101-049-WOI	JD Edwards EnterpriseOne Option: Demantra Deduction and Settlement Management	Per User/ Per Month	$9.56	EULA	US
54151ECOM	Denovo Ventures, LLC	101-050-WOI	JD Edwards EnterpriseOne Option: Demantra Trade Promotion Optimization	Per User/ Per Month	$9.56	EULA	US

SIN	Manufacturer	Part Number	Product Description	Unit of Issue	GSA Price w/ IFF	Warranty	COO
All of the following services include: Initial set up fees; Hardware and infrastructure costs; Technical managed services (backups, patches, technical tools and application upgrades); 24/7/365 help desk services; Functional support services; Development services; Oracle software; Ongoing training.							
54151ECOM	**Denovo Ventures, LLC**	**101-051-WOI**	**JD Edwards EnterpriseOne Supply Management Suite, which includes:**	**Per User/ Per Month**	**$205.69**	**EULA**	**US**
54151ECOM	Denovo Ventures, LLC	101-052-WOI	JD Edwards EnterpriseOne Buyer Workspace	Per User/ Per Month	$17.28	EULA	US
54151ECOM	Denovo Ventures, LLC	101-053-WOI	JD Edwards EnterpriseOne Mobile Purchase Order Approval	Per User/ Per Month	$7.61	EULA	US
54151ECOM	Denovo Ventures, LLC	101-054-WOI	JD Edwards EnterpriseOne Mobile Requisition Self Service Approval	Per User/ Per Month	$0.86	EULA	US
54151ECOM	Denovo Ventures, LLC	101-055-WOI	JD Edwards EnterpriseOne Operational Sourcing	Per User/ Per Month	$47.39	EULA	US
54151ECOM	Denovo Ventures, LLC	101-056-WOI	JD Edwards EnterpriseOne Procurement and Subcontract Management	Per User/ Per Month	$47.78	EULA	US
54151ECOM	Denovo Ventures, LLC	101-057-WOI	JD Edwards EnterpriseOne One View Reporting for Procurement and Subcontract Management	Per User/ Per Month	$11.99	EULA	US
54151ECOM	Denovo Ventures, LLC	101-058-WOI	JD Edwards EnterpriseOne Requisition Self Service	Per User/ Per Month	$1.72	EULA	US
54151ECOM	Denovo Ventures, LLC	101-059-WOI	JD Edwards EnterpriseOne Supplier Self Service	Per User/ Per Month	$93.92	EULA	US
54151ECOM	**Denovo Ventures, LLC**	**101-060-WOI**	**JD Edwards EnterpriseOne Asset Lifecycle Management Suite, which includes:**	**Per User/ Per Month**	**$199.27**	**EULA**	**US**
54151ECOM	Denovo Ventures, LLC	101-061-WOI	JD Edwards EnterpriseOne Advanced Real Estate Forecasting	Per User/ Per Month	$86.65	EULA	US
54151ECOM	Denovo Ventures, LLC	101-062-WOI	JD Edwards EnterpriseOne Capital Asset Management	Per User/ Per Month	$47.78	EULA	US
54151ECOM	Denovo Ventures, LLC	101-063-WOI	JD Edwards EnterpriseOne One View Reporting for Capital Asset Management	Per User/ Per Month	$11.99	EULA	US
54151ECOM	Denovo Ventures, LLC	101-064-WOI	JD Edwards EnterpriseOne Condition-Based Maintenance	Per User/ Per Month	$8.98	EULA	US
54151ECOM	Denovo Ventures, LLC	101-065-WOI	JD Edwards EnterpriseOne Equipment Cost Analysis	Per User/ Per Month	$8.85	EULA	US
54151ECOM	Denovo Ventures, LLC	101-066-WOI	JD Edwards EnterpriseOne Real Estate Management	Per User/ Per Month	$38.36	EULA	US
54151ECOM	Denovo Ventures, LLC	101-067-WOI	JD Edwards EnterpriseOne One View Reporting for Real Estate Management	Per User/ Per Month	$11.99	EULA	US
54151ECOM	Denovo Ventures, LLC	101-068-WOI	JD Edwards EnterpriseOne Resource Assignments	Per User/ Per Month	$6.79	EULA	US
54151ECOM	**Denovo Ventures, LLC**	**101-069-WOI**	**JD Edwards EnterpriseOne Project Management Suite, which includes:**	**Per User/ Per Month**	**$278.67**	**EULA**	**US**
54151ECOM	Denovo Ventures, LLC	101-070-WOI	JD Edwards EnterpriseOne Contract and Service Billing	Per User/ Per Month	$36.56	EULA	US
54151ECOM	Denovo Ventures, LLC	101-071-WOI	JD Edwards EnterpriseOne Homebuilder Management	Per User/ Per Month	$47.78	EULA	US
54151ECOM	Denovo Ventures, LLC	101-072-WOI	JD Edwards EnterpriseOne In-Memory Project Portfolio Management	Per User/ Per Month	$118.39	EULA	US
54151ECOM	Denovo Ventures, LLC	101-073-WOI	JD Edwards EnterpriseOne Project Costing	Per User/ Per Month	$47.39	EULA	US
54151ECOM	Denovo Ventures, LLC	101-074-WOI	JD Edwards EnterpriseOne One View Reporting for Project Costing	Per User/ Per Month	$11.99	EULA	US
54151ECOM	Denovo Ventures, LLC	101-075-WOI	JD Edwards EnterpriseOne Project and Government Contract Accounting	Per User/ Per Month	$47.52	EULA	US
54151ECOM	**Denovo Ventures, LLC**	**101-076-WOI**	**JD Edwards EnterpriseOne Financial Management Suite, which includes:**	**Per User/ Per Month**	**$75.20**	**EULA**	**US**
54151ECOM	Denovo Ventures, LLC	101-077-WOI	JD Edwards EnterpriseOne Expense Management	Per User/ Per Month	$0.98	EULA	US
54151ECOM	Denovo Ventures, LLC	101-078-WOI	JD Edwards EnterpriseOne Financials	Per User/ Per Month	$47.78	EULA	US
54151ECOM	Denovo Ventures, LLC	101-079-WOI	JD Edwards EnterpriseOne Option: Environmental Accounting and Reporting	Per User/ Per Month	$20.91	EULA	US
54151ECOM	Denovo Ventures, LLC	101-080-WOI	JD Edwards EnterpriseOne One View Reporting for Financials	Per User/ Per Month	$11.99	EULA	US
54151ECOM	Denovo Ventures, LLC	101-081-WOI	JD Edwards EnterpriseOne Mobile Expense Management	Per User/ Per Month	$0.67	EULA	US
54151ECOM	Denovo Ventures, LLC	101-082-WOI	JD Edwards EnterpriseOne System Foundation	Per User/ Per Month	$1.23	EULA	US
54151ECOM	**Denovo Ventures, LLC**	**101-083-WOI**	**JD Edwards EnterpriseOne Human Capital Management Suite, which includes**	**Per User/ Per Month**	**$45.09**	**EULA**	**US**
54151ECOM	Denovo Ventures, LLC	101-084-WOI	JD Edwards EnterpriseOne eRecruit	Per User/ Per Month	$1.35	EULA	US
54151ECOM	Denovo Ventures, LLC	101-085-WOI	JD Edwards EnterpriseOne Health & Safety Incident Management	Per User/ Per Month	$1.42	EULA	US
54151ECOM	Denovo Ventures, LLC	101-086-WOI	JD Edwards EnterpriseOne One View Reporting for Health & Safety Incident Management	Per User/ Per Month	$11.99	EULA	US
54151ECOM	Denovo Ventures, LLC	101-087-WOI	JD Edwards EnterpriseOne Human Resources	Per User/ Per Month	$3.43	EULA	US
54151ECOM	Denovo Ventures, LLC	101-088-WOI	JD Edwards EnterpriseOne One View Reporting for Human Resources	Per User/ Per Month	$11.99	EULA	US
54151ECOM	Denovo Ventures, LLC	101-089-WOI	JD Edwards EnterpriseOne Payroll	Per User/ Per Month	$3.84	EULA	US
54151ECOM	Denovo Ventures, LLC	101-090-WOI	JD Edwards EnterpriseOne One View Reporting for Payroll	Per User/ Per Month	$11.99	EULA	US
54151ECOM	Denovo Ventures, LLC	101-091-WOI	JD Edwards EnterpriseOne Self-Service Human Resources	Per User/ Per Month	$1.80	EULA	US
54151ECOM	Denovo Ventures, LLC	101-092-WOI	JD Edwards EnterpriseOne Time and Labor	Per User/ Per Month	$2.29	EULA	US
54151ECOM	**Denovo Ventures, LLC**	**101-093-WOI**	**JD Edwards EnterpriseOne Tools & Technology Suite, which includes:**	**Per User/ Per Month**	**$18.06**	**EULA**	**US**
54151ECOM	Denovo Ventures, LLC	101-094-WOI	*JD Edwards EnterpriseOne Core Tools and Infrastructure (EXCLUDED FROM SUITE)*	Per User/ Per Month	$3.32	*EULA*	*US*
54151ECOM	Denovo Ventures, LLC	101-095-WOI	Oracle Technology Foundation for JD Edwards EnterpriseOne	Per User/ Per Month	$6.34	EULA	US
54151ECOM	Denovo Ventures, LLC	101-096-WOI	Oracle TopLink and Application Development Framework	Per User/ Per Month	$1.73	EULA	US
54151ECOM	Denovo Ventures, LLC	101-097-WOI	JD Edwards EnterpriseOne One View Reporting Foundation	Per User/ Per Month	$11.99	EULA	US
54151ECOM	**Denovo Ventures, LLC**	**101-098-WOI**	**Application Integration Architecture Suite, which includes:**	**Per User/ Per Month**	**$2,043.76**	**EULA**	**US**
54151ECOM	Denovo Ventures, LLC	101-099-WOI	Application Integration Architecture Foundation Pack	Per User/ Per Month	$465.26	EULA	US
54151ECOM	Denovo Ventures, LLC	101-100-WOI	Oracle Demantra Sales and Operations Planning Integration to Hyperion Planning	Per User/ Per Month	$354.32	EULA	US
54151ECOM	Denovo Ventures, LLC	101-101-WOI	Oracle Project Portfolio Management Integration Pack for Primavera P6 and JD Edwards EnterpriseOne	Per User/ Per Month	$707.33	EULA	US
54151ECOM	Denovo Ventures, LLC	101-102-WOI	Oracle Utilities Customer Care and Billing Integration to JD Edwards Financials for General Ledger and Accounts	Per User/ Per Month	$36.61	EULA	US
54151ECOM	Denovo Ventures, LLC	101-103-WOI	Oracle Design to Release Integration Pack for Agile Product Lifecycle Management and JD Edwards EnterpriseOne	Per User/ Per Month	$707.33	EULA	US
54151ECOM	**Denovo Ventures, LLC**		**UPK**				

SIN	Manufacturer	Part Number	Product Description	Unit of Issue	GSA Price w/ IFF	Warranty	COO
All of the following services include: Initial set up fees; Hardware and infrastructure costs; Technical managed services (backups, patches, technical tools and application upgrades); 24/7/365 help desk services; Functional support services; Development services; Oracle software; Ongoing training.							
54151ECOM	Denovo Ventures, LLC	101-104-WOI	Oracle User Productivity Kit Standard - Developer	Per User/ Per Month	$173.53	EULA	US
54151ECOM	Denovo Ventures, LLC	101-105-WOI	Oracle User Productivity Kit Standard - User	Per User/ Per Month	$1.43	EULA	US
54151ECOM	Denovo Ventures, LLC	101-106-WOI	Oracle User Productivity Kit Standard - Employee	Per User/ Per Month	$0.93	EULA	US
54151ECOM	Denovo Ventures, LLC	101-107-WOI	Oracle User Productivity Kit Professional - Developer	Per User/ Per Month	$173.53	EULA	US
54151ECOM	Denovo Ventures, LLC	101-108-WOI	Oracle User Productivity Kit Professional - User	Per User/ Per Month	$1.53	EULA	US
54151ECOM	Denovo Ventures, LLC	101-109-WOI	Oracle User Productivity Kit Professional - Employee	Per User/ Per Month	$1.03	EULA	US
54151ECOM	**Denovo Ventures, LLC**		**User Productivity Kit Content Materials for Manufacturing and Supply Chain Management Suite (up to 4,000**				
54151ECOM	Denovo Ventures, LLC	101-110-WOI	JD Edwards EnterpriseOne UPK for Blend Management	Per User/ Per Month	$176.90	EULA	US
54151ECOM	Denovo Ventures, LLC	101-111-WOI	JD Edwards EnterpriseOne UPK for Configurator	Per User/ Per Month	$176.90	EULA	US
54151ECOM	Denovo Ventures, LLC	101-112-WOI	JD Edwards EnterpriseOne UPK for Grower Management	Per User/ Per Month	$176.90	EULA	US
54151ECOM	Denovo Ventures, LLC	101-113-WOI	JD Edwards EnterpriseOne UPK for Grower Pricing and Payments	Per User/ Per Month	$176.90	EULA	US
54151ECOM	Denovo Ventures, LLC	101-114-WOI	JD Edwards EnterpriseOne UPK for Manufacturing Management Engineer to Order	Per User/ Per Month	$176.90	EULA	US
54151ECOM	Denovo Ventures, LLC	101-115-WOI	JD Edwards EnterpriseOne UPK for Manufacturing Management, Process Manufacturing	Per User/ Per Month	$176.90	EULA	US
54151ECOM	**Denovo Ventures, LLC**		**User Productivity Kit Content Materials for Financial Management**				
54151ECOM	Denovo Ventures, LLC	101-116-WOI	JD Edwards EnterpriseOne UPK Accounts Payable	Per User/ Per Month	$176.90	EULA	US
54151ECOM	Denovo Ventures, LLC	101-117-WOI	JD Edwards EnterpriseOne UPK Accounts Receivable	Per User/ Per Month	$176.90	EULA	US
54151ECOM	Denovo Ventures, LLC	101-118-WOI	JD Edwards EnterpriseOne UPK for Fixed Assets Accounting	Per User/ Per Month	$176.90	EULA	US
54151ECOM	Denovo Ventures, LLC	101-119-WOI	JD Edwards EnterpriseOne UPK General Ledger	Per User/ Per Month	$176.90	EULA	US
54151ECOM	**Denovo Ventures, LLC**		**User Productivity Kit Content Materials for Supply Chain Management**				
54151ECOM	Denovo Ventures, LLC	101-120-WOI	JD Edwards EnterpriseOne UPK for Advanced Pricing	Per User/ Per Month	$176.90	EULA	US
54151ECOM	Denovo Ventures, LLC	101-121-WOI	JD Edwards EnterpriseOne UPK Inventory Management	Per User/ Per Month	$176.90	EULA	US
54151ECOM	Denovo Ventures, LLC	101-122-WOI	JD Edwards EnterpriseOne UPK Manufacturing - PDM	Per User/ Per Month	$176.90	EULA	US
54151ECOM	Denovo Ventures, LLC	101-123-WOI	JD Edwards EnterpriseOne UPK for Sales Order Management	Per User/ Per Month	$176.90	EULA	US
54151ECOM	**Denovo Ventures, LLC**		**User Productivity Kit Content Materials for Supplier Relationship Management**				
54151ECOM	Denovo Ventures, LLC	101-124-WOI	JD Edwards EnterpriseOne UPK Procurement and Subcontract Management	Per User/ Per Month	$176.90	EULA	US
54151ECOM	Denovo Ventures, LLC	101-125-WOI	JD Edwards EnterpriseOne UPK for Manufacturing Management Discrete Shop Floor Management	Per User/ Per Month	$176.90	EULA	US
54151ECOM	**Denovo Ventures, LLC**		**User Productivity Kit Content Materials for Asset Lifecycle Management**				
54151ECOM	Denovo Ventures, LLC	101-126-WOI	JD Edwards EnterpriseOne UPK for Advanced Real Estate Forecasting	Per User/ Per Month	$176.90	EULA	US
54151ECOM	Denovo Ventures, LLC	101-127-WOI	JD Edwards EnterpriseOne UPK for Real Estate Management	Per User/ Per Month	$176.90	EULA	US
54151ECOM	**Denovo Ventures, LLC**		**User Productivity Kit Content Materials for Project Management**				
54151ECOM	Denovo Ventures, LLC	101-128-WOI	JD Edwards EnterpriseOne UPK for Homebuilder Management	Per User/ Per Month	$176.90	EULA	US
54151ECOM	**Denovo Ventures, LLC**		**User Productivity Kit Content Materials for Human Capital Management**				
54151ECOM	Denovo Ventures, LLC	101-129-WOI	JD Edwards EnterpriseOne UPK for Human Capital Management Fundamentals	Per User/ Per Month	$176.90	EULA	US
54151ECOM	Denovo Ventures, LLC	101-130-WOI	JD Edwards EnterpriseOne User Productivity Kit for Human Resources, Benefits	Per User/ Per Month	$176.90	EULA	US
54151ECOM	Denovo Ventures, LLC	101-131-WOI	JD Edwards EnterpriseOne UPK for Time and Labor	Per User/ Per Month	$176.90	EULA	US
54151ECOM	**Denovo Ventures, LLC**		**Other User Productivity Kit Content Materials**				
54151ECOM	Denovo Ventures, LLC	101-132-WOI	JD Edwards EnterpriseOne UPK Fundamentals for EnterpriseOne	Per User/ Per Month	$176.90	EULA	US

SIN	Manufacturer	Part Numbe	Product Description	Unit of Issue	GSA Price w/ IFF	Warranty	COO
All of the following services with implementation include: Initial setup fees; Hardware and infrastructure costs; Technical managed services (backups, patches, technical tools and application upgrades); 24/7/365 help desk services; Functional support services; Development services; Oracle software; Ongoing training; Project management; Design, configuration, and testing services; Initial development (data conversion, reports, and integration with third party solutions); Initial training services; Post go-live support; System and training documentation.							
54151ECOM	**Denovo Ventures, LLC**	**101-001-WI**	**JD Edwards EnterpriseOne Customer Relationship Management Suite, which includes:**	**Per User/ Per Month**	**$326.60**	**EULA**	**US**
54151ECOM	Denovo Ventures, LLC	101-002-WI	JD Edwards EnterpriseOne Advanced Pricing	Per User/ Per Month	$30.97	EULA	US
54151ECOM	Denovo Ventures, LLC	101-003-WI	JD Edwards EnterpriseOne Branch Scripting	Per User/ Per Month	$7.29	EULA	US
54151ECOM	Denovo Ventures, LLC	101-004-WI	JD Edwards EnterpriseOne Case Management	Per User/ Per Month	$31.78	EULA	US
54151ECOM	Denovo Ventures, LLC	101-005-WI	JD Edwards EnterpriseOne CRM Foundation	Per User/ Per Month	$14.28	EULA	US
54151ECOM	Denovo Ventures, LLC	101-006-WI	JD Edwards EnterpriseOne Customer Self Service	Per User/ Per Month	$27.39	EULA	US
54151ECOM	Denovo Ventures, LLC	101-007-WI	JD Edwards EnterpriseOne Fulfillment Management	Per User/ Per Month	$54.17	EULA	US
54151ECOM	Denovo Ventures, LLC	101-008-WI	JD Edwards EnterpriseOne Mobile Sales Inquiry	Per User/ Per Month	$14.79	EULA	US
54151ECOM	Denovo Ventures, LLC	101-009-WI	JD Edwards EnterpriseOne Sales Force Automation	Per User/ Per Month	$23.65	EULA	US
54151ECOM	Denovo Ventures, LLC	101-010-WI	JD Edwards EnterpriseOne Sales Order Management	Per User/ Per Month	$67.12	EULA	US
54151ECOM	Denovo Ventures, LLC	101-011-WI	JD Edwards EnterpriseOne One View Reporting for Sales Order Management	Per User/ Per Month	$13.07	EULA	US
54151ECOM	Denovo Ventures, LLC	101-012-WI	JD Edwards EnterpriseOne Service Management	Per User/ Per Month	$41.01	EULA	US
54151ECOM	Denovo Ventures, LLC	101-013-WI	JD Edwards EnterpriseOne One View Reporting for Service Management	Per User/ Per Month	$13.07	EULA	US
54151ECOM	Denovo Ventures, LLC	101-014-WI	JD Edwards EnterpriseOne Service Management Foundation	Per User/ Per Month	$7.89	EULA	US
54151ECOM	Denovo Ventures, LLC	101-015-WI	JD Edwards EnterpriseOne Solution Advisor	Per User/ Per Month	$16.40	EULA	US
54151ECOM	**Denovo Ventures, LLC**	**101-016-WI**	**JD Edwards EnterpriseOne Manufacturing and Supply Chain Management Suite, which includes:**	**Per User/ Per Month**	**$915.70**	**EULA**	**US**
54151ECOM	Denovo Ventures, LLC	101-017-WI	JD Edwards EnterpriseOne Advanced Stock Valuation	Per User/ Per Month	$37.08	EULA	US
54151ECOM	Denovo Ventures, LLC	101-018-WI	JD Edwards EnterpriseOne Agreement Management	Per User/ Per Month	$57.89	EULA	US
54151ECOM	Denovo Ventures, LLC	101-019-WI	JD Edwards EnterpriseOne Apparel Management	Per User/ Per Month	$51.84	EULA	US
54151ECOM	Denovo Ventures, LLC	101-020-WI	JD Edwards EnterpriseOne Blend Management	Per User/ Per Month	$57.89	EULA	US
54151ECOM	Denovo Ventures, LLC	101-021-WI	JD Edwards EnterpriseOne Bulk Stock Inventory	Per User/ Per Month	$37.08	EULA	US
54151ECOM	Denovo Ventures, LLC	101-022-WI	JD Edwards EnterpriseOne Configurator	Per User/ Per Month	$46.80	EULA	US
54151ECOM	Denovo Ventures, LLC	101-023-WI	JD Edwards EnterpriseOne Demand Flow Manufacturing	Per User/ Per Month	$59.74	EULA	US
54151ECOM	Denovo Ventures, LLC	101-024-WI	JD Edwards EnterpriseOne Demand Scheduling Execution	Per User/ Per Month	$70.84	EULA	US
54151ECOM	Denovo Ventures, LLC	101-025-WI	JD Edwards EnterpriseOne Grower Management	Per User/ Per Month	$57.89	EULA	US
54151ECOM	Denovo Ventures, LLC	101-026-WI	JD Edwards EnterpriseOne Grower Pricing and Payments	Per User/ Per Month	$54.17	EULA	US
54151ECOM	Denovo Ventures, LLC	101-027-WI	JD Edwards EnterpriseOne Inventory Management	Per User/ Per Month	$70.84	EULA	US
54151ECOM	Denovo Ventures, LLC	101-028-WI	JD Edwards EnterpriseOne One View Reporting for Inventory Management	Per User/ Per Month	$13.07	EULA	US
54151ECOM	Denovo Ventures, LLC	101-029-WI	JD Edwards EnterpriseOne Manufacturing Management	Per User/ Per Month	$74.55	EULA	US
54151ECOM	Denovo Ventures, LLC	101-030-WI	JD Edwards EnterpriseOne One View Reporting for Manufacturing Management	Per User/ Per Month	$13.07	EULA	US
54151ECOM	Denovo Ventures, LLC	101-031-WI	JD Edwards EnterpriseOne Product Variants	Per User/ Per Month	$45.25	EULA	US
54151ECOM	Denovo Ventures, LLC	101-032-WI	JD Edwards EnterpriseOne Quality Management	Per User/ Per Month	$32.13	EULA	US
54151ECOM	Denovo Ventures, LLC	101-033-WI	JD Edwards EnterpriseOne Requirements Planning	Per User/ Per Month	$35.85	EULA	US
54151ECOM	Denovo Ventures, LLC	101-034-WI	JD Edwards EnterpriseOne RFID Processor	Per User/ Per Month	$30.97	EULA	US
54151ECOM	Denovo Ventures, LLC	101-035-WI	JD Edwards EnterpriseOne Transportation Management	Per User/ Per Month	$70.84	EULA	US
54151ECOM	Denovo Ventures, LLC	101-036-WI	JD Edwards EnterpriseOne One View Reporting for Transportation Management	Per User/ Per Month	$47.81	EULA	US
54151ECOM	Denovo Ventures, LLC	101-037-WI	JD Edwards EnterpriseOne Warehouse Management	Per User/ Per Month	$51.85	EULA	US
54151ECOM	**Denovo Ventures, LLC**	**101-038-WI**	**JD Edwards EnterpriseOne Supply Chain Planning (APS) Suite, which includes:**	**Per User/ Per Month**	**$106.41**	**EULA**	**US**
54151ECOM	Denovo Ventures, LLC	101-039-WI	JD Edwards EnterpriseOne Advanced Planning Agent	Per User/ Per Month	$14.57	EULA	US
54151ECOM	Denovo Ventures, LLC	101-040-WI	JD Edwards EnterpriseOne Order Promising	Per User/ Per Month	$32.98	EULA	US
54151ECOM	Denovo Ventures, LLC	101-041-WI	JD Edwards EnterpriseOne PDP Collaborative Web Client	Per User/ Per Month	$12.16	EULA	US
54151ECOM	Denovo Ventures, LLC	101-042-WI	JD Edwards EnterpriseOne Production Scheduling	Per User/ Per Month	$29.26	EULA	US
54151ECOM	Denovo Ventures, LLC	101-043-WI	JD Edwards EnterpriseOne Production Scheduling - Process	Per User/ Per Month	$29.26	EULA	US
54151ECOM	**Denovo Ventures, LLC**	**101-044-WI**	**JD Edwards EnterpriseOne Demantra Suite, which includes:**	**Per User/ Per Month**	**$139.53**	**EULA**	**US**
54151ECOM	Denovo Ventures, LLC	101-045-WI	JD Edwards EnterpriseOne Demantra Demand Management	Per User/ Per Month	$35.21	EULA	US
54151ECOM	Denovo Ventures, LLC	101-046-WI	JD Edwards EnterpriseOne Option: Demantra Advanced Forecasting and Demand Modeling	Per User/ Per Month	$20.32	EULA	US
54151ECOM	Denovo Ventures, LLC	101-047-WI	JD Edwards EnterpriseOne Option: Demantra Real-time Sales and Operations Planning	Per User/ Per Month	$29.16	EULA	US
54151ECOM	Denovo Ventures, LLC	101-048-WI	JD Edwards EnterpriseOne Demantra Predictive Trade Planning	Per User/ Per Month	$29.70	EULA	US
54151ECOM	Denovo Ventures, LLC	101-049-WI	JD Edwards EnterpriseOne Option: Demantra Deduction and Settlement Management	Per User/ Per Month	$20.32	EULA	US
54151ECOM	Denovo Ventures, LLC	101-050-WI	JD Edwards EnterpriseOne Option: Demantra Trade Promotion Optimization	Per User/ Per Month	$20.32	EULA	US
54151ECOM	**Denovo Ventures, LLC**	**101-051-WI**	**JD Edwards EnterpriseOne Supply Management Suite, which includes:**	**Per User/ Per Month**	**$309.96**	**EULA**	**US**

SIN	Manufacturer	Part Numbe	Product Description	Unit of Issue	GSA Price w/ IFF	Warranty	COO
All of the following services with implementation include: Initial setup fees; Hardware and infrastructure costs; Technical managed services (backups, patches, technical tools and application upgrades); 24/7/365 help desk services; Functional support services; Development services; Oracle software; Ongoing training; Project management; Design, configuration, and testing services; Initial development (data conversion, reports, and integration with third party solutions); Initial training services; Post go-live support; System and training documentation.							
54151ECOM	Denovo Ventures, LLC	101-052-WI	JD Edwards EnterpriseOne Buyer Workspace	Per User/ Per Month	$28.04	EULA	US
54151ECOM	Denovo Ventures, LLC	101-053-WI	JD Edwards EnterpriseOne Mobile Purchase Order Approval	Per User/ Per Month	$14.79	EULA	US
54151ECOM	Denovo Ventures, LLC	101-054-WI	JD Edwards EnterpriseOne Mobile Requisition Self Service Approval	Per User/ Per Month	$8.03	EULA	US
54151ECOM	Denovo Ventures, LLC	101-055-WI	JD Edwards EnterpriseOne Operational Sourcing	Per User/ Per Month	$67.12	EULA	US
54151ECOM	Denovo Ventures, LLC	101-056-WI	JD Edwards EnterpriseOne Procurement and Subcontract Management	Per User/ Per Month	$78.27	EULA	US
54151ECOM	Denovo Ventures, LLC	101-057-WI	JD Edwards EnterpriseOne One View Reporting for Procurement and Subcontract Management	Per User/ Per Month	$13.07	EULA	US
54151ECOM	Denovo Ventures, LLC	101-058-WI	JD Edwards EnterpriseOne Requisition Self Service	Per User/ Per Month	$17.86	EULA	US
54151ECOM	Denovo Ventures, LLC	101-059-WI	JD Edwards EnterpriseOne Supplier Self Service	Per User/ Per Month	$117.23	EULA	US
54151ECOM	**Denovo Ventures, LLC**	**101-060-WI**	**JD Edwards EnterpriseOne Asset Lifecycle Management Suite, which includes:**	**Per User/ Per Month**	**$302.89**	**EULA**	**US**
54151ECOM	Denovo Ventures, LLC	101-061-WI	JD Edwards EnterpriseOne Advanced Real Estate Forecasting	Per User/ Per Month	$102.79	EULA	US
54151ECOM	Denovo Ventures, LLC	101-062-WI	JD Edwards EnterpriseOne Capital Asset Management	Per User/ Per Month	$78.27	EULA	US
54151ECOM	Denovo Ventures, LLC	101-063-WI	JD Edwards EnterpriseOne One View Reporting for Capital Asset Management	Per User/ Per Month	$13.07	EULA	US
54151ECOM	Denovo Ventures, LLC	101-064-WI	JD Edwards EnterpriseOne Condition-Based Maintenance	Per User/ Per Month	$25.12	EULA	US
54151ECOM	Denovo Ventures, LLC	101-065-WI	JD Edwards EnterpriseOne Equipment Cost Analysis	Per User/ Per Month	$19.61	EULA	US
54151ECOM	Denovo Ventures, LLC	101-066-WI	JD Edwards EnterpriseOne Real Estate Management	Per User/ Per Month	$58.09	EULA	US
54151ECOM	Denovo Ventures, LLC	101-067-WI	JD Edwards EnterpriseOne One View Reporting for Real Estate Management	Per User/ Per Month	$13.07	EULA	US
54151ECOM	Denovo Ventures, LLC	101-068-WI	JD Edwards EnterpriseOne Resource Assignments	Per User/ Per Month	$26.52	EULA	US
54151ECOM	**Denovo Ventures, LLC**	**101-069-WI**	**JD Edwards EnterpriseOne Project Management Suite, which includes:**	**Per User/ Per Month**	**$397.47**	**EULA**	**US**
54151ECOM	Denovo Ventures, LLC	101-070-WI	JD Edwards EnterpriseOne Contract and Service Billing	Per User/ Per Month	$63.46	EULA	US
54151ECOM	Denovo Ventures, LLC	101-071-WI	JD Edwards EnterpriseOne Homebuilder Management	Per User/ Per Month	$78.27	EULA	US
54151ECOM	Denovo Ventures, LLC	101-072-WI	JD Edwards EnterpriseOne In-Memory Project Portfolio Management	Per User/ Per Month	$148.87	EULA	US
54151ECOM	Denovo Ventures, LLC	101-073-WI	JD Edwards EnterpriseOne Project Costing	Per User/ Per Month	$67.12	EULA	US
54151ECOM	Denovo Ventures, LLC	101-074-WI	JD Edwards EnterpriseOne One View Reporting for Project Costing	Per User/ Per Month	$13.07	EULA	US
54151ECOM	Denovo Ventures, LLC	101-075-WI	JD Edwards EnterpriseOne Project and Government Contract Accounting	Per User/ Per Month	$70.84	EULA	US
54151ECOM	**Denovo Ventures, LLC**	**101-076-WI**	**JD Edwards EnterpriseOne Financial Management Suite, which includes:**	**Per User/ Per Month**	**$137.51**	**EULA**	**US**
54151ECOM	Denovo Ventures, LLC	101-077-WI	JD Edwards EnterpriseOne Expense Management	Per User/ Per Month	$17.12	EULA	US
54151ECOM	Denovo Ventures, LLC	101-078-WI	JD Edwards EnterpriseOne Financials	Per User/ Per Month	$78.27	EULA	US
54151ECOM	Denovo Ventures, LLC	101-079-WI	JD Edwards EnterpriseOne Option: Environmental Accounting and Reporting	Per User/ Per Month	$31.67	EULA	US
54151ECOM	Denovo Ventures, LLC	101-080-WI	JD Edwards EnterpriseOne One View Reporting for Financials	Per User/ Per Month	$13.07	EULA	US
54151ECOM	Denovo Ventures, LLC	101-081-WI	JD Edwards EnterpriseOne Mobile Expense Management	Per User/ Per Month	$7.85	EULA	US
54151ECOM	Denovo Ventures, LLC	101-082-WI	JD Edwards EnterpriseOne System Foundation	Per User/ Per Month	$4.82	EULA	US
54151ECOM	**Denovo Ventures, LLC**	**101-083-WI**	**JD Edwards EnterpriseOne Human Capital Management Suite, which includes**	**Per User/ Per Month**	**$177.13**	**EULA**	**US**
54151ECOM	Denovo Ventures, LLC	101-084-WI	JD Edwards EnterpriseOne eRecruit	Per User/ Per Month	$21.08	EULA	US
54151ECOM	Denovo Ventures, LLC	101-085-WI	JD Edwards EnterpriseOne Health & Safety Incident Management	Per User/ Per Month	$17.56	EULA	US
54151ECOM	Denovo Ventures, LLC	101-086-WI	JD Edwards EnterpriseOne One View Reporting for Health & Safety Incident Management	Per User/ Per Month	$13.07	EULA	US
54151ECOM	Denovo Ventures, LLC	101-087-WI	JD Edwards EnterpriseOne Human Resources	Per User/ Per Month	$35.72	EULA	US
54151ECOM	Denovo Ventures, LLC	101-088-WI	JD Edwards EnterpriseOne One View Reporting for Human Resources	Per User/ Per Month	$13.07	EULA	US
54151ECOM	Denovo Ventures, LLC	101-089-WI	JD Edwards EnterpriseOne Payroll	Per User/ Per Month	$36.12	EULA	US
54151ECOM	Denovo Ventures, LLC	101-090-WI	JD Edwards EnterpriseOne One View Reporting for Payroll	Per User/ Per Month	$13.07	EULA	US
54151ECOM	Denovo Ventures, LLC	101-091-WI	JD Edwards EnterpriseOne Self-Service Human Resources	Per User/ Per Month	$21.53	EULA	US
54151ECOM	Denovo Ventures, LLC	101-092-WI	JD Edwards EnterpriseOne Time and Labor	Per User/ Per Month	$25.60	EULA	US
54151ECOM	**Denovo Ventures, LLC**	**101-093-WI**	**JD Edwards EnterpriseOne Tools & Technology Suite, which includes:**	**Per User/ Per Month**	**$40.01**	**EULA**	**US**
54151ECOM	Denovo Ventures, LLC	101-094-WI	*JD Edwards EnterpriseOne Core Tools and Infrastructure (EXCLUDED FROM SUITE)*	Per User/ Per Month	$23.04	*EULA*	*US*
54151ECOM	Denovo Ventures, LLC	101-095-WI	Oracle Technology Foundation for JD Edwards EnterpriseOne	Per User/ Per Month	$26.07	EULA	US
54151ECOM	Denovo Ventures, LLC	101-096-WI	Oracle TopLink and Application Development Framework	Per User/ Per Month	$5.32	EULA	US
54151ECOM	Denovo Ventures, LLC	101-097-WI	JD Edwards EnterpriseOne One View Reporting Foundation	Per User/ Per Month	$13.07	EULA	US
54151ECOM	**Denovo Ventures, LLC**	**101-098-WI**	**Application Integration Architecture Suite, which includes:**	**Per User/ Per Month**	**$2,164.82**	**EULA**	**US**
54151ECOM	Denovo Ventures, LLC	101-099-WI	Application Integration Architecture Foundation Pack	Per User/ Per Month	$492.17	EULA	US
54151ECOM	Denovo Ventures, LLC	101-100-WI	Oracle Demantra Sales and Operations Planning Integration to Hyperion Planning	Per User/ Per Month	$381.22	EULA	US
54151ECOM	Denovo Ventures, LLC	101-101-WI	Oracle Project Portfolio Management Integration Pack for Primavera P6 and JD Edwards EnterpriseOne	Per User/ Per Month	$734.23	EULA	US
54151ECOM	Denovo Ventures, LLC	101-102-WI	Oracle Utilities Customer Care and Billing Integration to JD Edwards Financials for General Ledger and Accounts Payable	Per User/ Per Month	$63.51	EULA	US

SIN	Manufacturer	Part Numbe	Product Description	Unit of Issue	GSA Price w/ IFF	Warranty	COO
All of the following services with implementation include: Initial setup fees; Hardware and infrastructure costs; Technical managed services (backups, patches, technical tools and application upgrades); 24/7/365 help desk services: Functional support services: Development services: Oracle software: Ongoing training: Project management: Design, configuration, and testing services: Initial development (data conversion, reports, and integration with third party solutions); Initial training services; Post go-live support; System and training documentation.							
54151ECOM	Denovo Ventures, LLC	101-103-WI	Oracle Design to Release Integration Pack for Agile Product Lifecycle Management and JD Edwards EnterpriseOne	Per User/ Per Month	$734.23	EULA	US
54151ECOM	Denovo Ventures, LLC		UPK				
54151ECOM	Denovo Ventures, LLC	101-104-WI	Oracle User Productivity Kit Standard - Developer	Per User/ Per Month	$177.12	EULA	US
54151ECOM	Denovo Ventures, LLC	101-105-WI	Oracle User Productivity Kit Standard - User	Per User/ Per Month	$5.02	EULA	US
54151ECOM	Denovo Ventures, LLC	101-106-WI	Oracle User Productivity Kit Standard - Employee	Per User/ Per Month	$4.51	EULA	US
54151ECOM	Denovo Ventures, LLC	101-107-WI	Oracle User Productivity Kit Professional - Developer	Per User/ Per Month	$177.12	EULA	US
54151ECOM	Denovo Ventures, LLC	101-108-WI	Oracle User Productivity Kit Professional - User	Per User/ Per Month	$5.12	EULA	US
54151ECOM	Denovo Ventures, LLC	101-109-WI	Oracle User Productivity Kit Professional - Employee	Per User/ Per Month	$4.61	EULA	US
54151ECOM	Denovo Ventures, LLC		User Productivity Kit Content Materials for Manufacturing and Supply Chain Management Suite (up to 4,000 employees)				
54151ECOM	Denovo Ventures, LLC	101-110-WI	JD Edwards EnterpriseOne UPK for Blend Management	Per User/ Per Month	$177.97	EULA	US
54151ECOM	Denovo Ventures, LLC	101-111-WI	JD Edwards EnterpriseOne UPK for Configurator	Per User/ Per Month	$177.97	EULA	US
54151ECOM	Denovo Ventures, LLC	101-112-WI	JD Edwards EnterpriseOne UPK for Grower Management	Per User/ Per Month	$177.97	EULA	US
54151ECOM	Denovo Ventures, LLC	101-113-WI	JD Edwards EnterpriseOne UPK for Grower Pricing and Payments	Per User/ Per Month	$177.97	EULA	US
54151ECOM	Denovo Ventures, LLC	101-114-WI	JD Edwards EnterpriseOne UPK for Manufacturing Management Engineer to Order	Per User/ Per Month	$177.97	EULA	US
54151ECOM	Denovo Ventures, LLC	101-115-WI	JD Edwards EnterpriseOne UPK for Manufacturing Management, Process Manufacturing	Per User/ Per Month	$177.97	EULA	US
54151ECOM	Denovo Ventures, LLC		User Productivity Kit Content Materials for Financial Management				
54151ECOM	Denovo Ventures, LLC	101-116-WI	JD Edwards EnterpriseOne UPK Accounts Payable	Per User/ Per Month	$177.97	EULA	US
54151ECOM	Denovo Ventures, LLC	101-117-WI	JD Edwards EnterpriseOne UPK Accounts Receivable	Per User/ Per Month	$177.97	EULA	US
54151ECOM	Denovo Ventures, LLC	101-118-WI	JD Edwards EnterpriseOne UPK for Fixed Assets Accounting	Per User/ Per Month	$177.97	EULA	US
54151ECOM	Denovo Ventures, LLC	101-119-WI	JD Edwards EnterpriseOne UPK General Ledger	Per User/ Per Month	$177.97	EULA	US
54151ECOM	Denovo Ventures, LLC		User Productivity Kit Content Materials for Supply Chain Management				
54151ECOM	Denovo Ventures, LLC	101-120-WI	JD Edwards EnterpriseOne UPK for Advanced Pricing	Per User/ Per Month	$177.97	EULA	US
54151ECOM	Denovo Ventures, LLC	101-121-WI	JD Edwards EnterpriseOne UPK Inventory Management	Per User/ Per Month	$177.97	EULA	US
54151ECOM	Denovo Ventures, LLC	101-122-WI	JD Edwards EnterpriseOne UPK Manufacturing - PDM	Per User/ Per Month	$177.97	EULA	US
54151ECOM	Denovo Ventures, LLC	101-123-WI	JD Edwards EnterpriseOne UPK for Sales Order Management	Per User/ Per Month	$177.97	EULA	US
54151ECOM	Denovo Ventures, LLC		User Productivity Kit Content Materials for Supplier Relationship Management				
54151ECOM	Denovo Ventures, LLC	101-124-WI	JD Edwards EnterpriseOne UPK Procurement and Subcontract Management	Per User/ Per Month	$177.97	EULA	US
54151ECOM	Denovo Ventures, LLC	101-125-WI	JD Edwards EnterpriseOne UPK for Manufacturing Management Discrete Shop Floor Management	Per User/ Per Month	$177.97	EULA	US
54151ECOM	Denovo Ventures, LLC		User Productivity Kit Content Materials for Asset Lifecycle Management				
54151ECOM	Denovo Ventures, LLC	101-126-WI	JD Edwards EnterpriseOne UPK for Advanced Real Estate Forecasting	Per User/ Per Month	$177.97	EULA	US
54151ECOM	Denovo Ventures, LLC	101-127-WI	JD Edwards EnterpriseOne UPK for Real Estate Management	Per User/ Per Month	$177.97	EULA	US
54151ECOM	Denovo Ventures, LLC		User Productivity Kit Content Materials for Project Management				
54151ECOM	Denovo Ventures, LLC	101-128-WI	JD Edwards EnterpriseOne UPK for Homebuilder Management	Per User/ Per Month	$177.97	EULA	US
54151ECOM	Denovo Ventures, LLC		User Productivity Kit Content Materials for Human Capital Management				
54151ECOM	Denovo Ventures, LLC	101-129-WI	JD Edwards EnterpriseOne UPK for Human Capital Management Fundamentals	Per User/ Per Month	$177.97	EULA	US
54151ECOM	Denovo Ventures, LLC	101-130-WI	JD Edwards EnterpriseOne User Productivity Kit for Human Resources, Benefits	Per User/ Per Month	$177.97	EULA	US
54151ECOM	Denovo Ventures, LLC	101-131-WI	JD Edwards EnterpriseOne UPK for Time and Labor	Per User/ Per Month	$177.97	EULA	US
54151ECOM	Denovo Ventures, LLC		Other User Productivity Kit Content Materials				
54151ECOM	Denovo Ventures, LLC	101-132-WI	JD Edwards EnterpriseOne UPK Fundamentals for EnterpriseOne	Per User/ Per Month	$177.97	EULA	US

Denovo

☐ A check in this box indicates that this agreement has been changed from the original.

MASTER SERVICES AGREEMENT

THIS MASTER SERVICES AGREEMENT (this "***MSA***"), dated as of the [00] day of [month], [year] ("***Effective Date***"), is by and between DENOVO VENTURES, LLC, a Colorado limited liability company ("***Denovo***"), and [enter company name], a [enter state, enter corporation or LLC] (the "***Client***") (each a "***Party***" and together the "***Parties***").

RECITAL

Client desires to engage Denovo to provide certain products and services, and Denovo desires to provide such products and services, pursuant to the terms and conditions set forth herein.

AGREEMENTS

NOW, THEREFORE, in consideration of the recitals and mutual covenants contained herein and other good and valuable consideration, the receipt and sufficiency of which are hereby acknowledged, the parties to this MSA agree as follows:

1. ***Construction***. This MSA sets forth the general terms and conditions of the Agreement. For each service Denovo offers, there is a Supplement and a Statement of Work that sets forth more specifically the Services and Service Levels Denovo will provide the Client. If the Client requests software-as-a-service, hosting or other services that require a software product purchase, in addition to an SOW, Denovo will provide an Order Document. Each SOW and/or Order Document(s) combined with the corresponding Supplement and MSA shall constitute an independent contract. To the extent there are inconsistencies between the MSA, the Supplement and the SOW, and the Multiple Award Schedule (MAS), the Multiple Award Schedule contract will govern and control over the Supplement and the SOW. The terms and conditions of the Order Document apply exclusively to the products therein.

2. ***Definitions***. The bold and italicized terms are defined as follows. Capitalized terms not otherwise defined here shall be defined in the context in which they are used and shall have the meanings therein indicated. Capitalized terms not defined herein shall have the meaning attributed to them in the applicable Supplement, Attachment, SOW or Order Document.

(i) ***Aggregated Data***. Any aggregated and statistical data derived from the operation of the Services, including, without limitation, the number of records in the Service, the number and types of transactions, configurations, and reports processed in the Service and the performance results for the Service

(ii) ***Agreement.*** Each SOW, Order Document(s), and/or Multiple Award Schedule contract combined with the corresponding Supplement and the MSA

(iii) ***Change***. The addition, subtraction or change to any Services related to the SOW; a change that results in increased or reduced fees for applicable Services; and changes to the Service Levels not agreed to as part of the SOW

(iv) ***Claim***. Third party claims against the Client that any Work Product infringes a presently existing United States copyright or constitutes misappropriation of unlawful disclosure or use of a third party's trade secrets

(v) ***Client Applications.*** All software programs, including any source code for such programs, that the Client or the Client's clients provide in connection with the Hosting Services

(vi) ***Client Data.*** Client's Confidential Information and all text, files, images, graphics, information, data, illustrations, personal data, video, audio, photographs, and other content and material in any format, provided or uploaded by the Client in connection with the Agreement

(vii) ***Confidential Information***. Any proprietary information or data (including the terms of the Agreement), Trade Secrets (as defined below) and any other information designated as confidential by either Party is considered confidential

(viii) ***Denovo Background Materials***. The various concepts, ideas, recommendations, methods, methodologies, procedures, processes, know-how and techniques, templates, programs, the generalized features of the structure, sequence and organization of software, user interfaces and screen designs, development tools (including without limitation general purpose consulting and software tools), utilities and routines, and logic, integrations, coherence and methods of operation of systems that Denovo has created, acquired or otherwise has rights in, and may, in connection with the performance of Services hereunder, employ, provide, modify, create, or acquire or otherwise obtain rights in

(ix) ***Denovo Intellectual Property***. Denovo Background Materials or any of its other intellectual property or property

(x) ***Dispute***. Any dispute, claim or controversy arising out of or relating to the Agreement, including without limitation a dispute regarding an alleged breach of the Agreement and a dispute regarding the arbitrability of the Dispute Resolution section

(xi) ***Fees*** or ***Charges***. Any fees or charges for the Services and/or Software Products described in the Multiple Award Schedule Contract.

(xii) ***Law***. Any declaration, decree, directive, legislative enactment, order, ordinance, regulation, rule or other binding restriction of or by any Federal, state, municipal, local, territorial, or other governmental department, regulatory authority, judicial or administrative body, whether domestic, foreign or international

(xiii) ***Order Document.*** A document setting forth software products and pricing as established in the Multiple Award Schedule Contract.

(xiv) ***Service***. Generally, all of the services Denovo agrees to provide the Client as set forth in the SOW

(xv) ***Statement of Work*** or ***SOW***. A statement of work that sets forth more specifically the Services and Service Levels Denovo will provide the Client.

(xvi) ***Supplement***. An addendum that provides terms and conditions specific to one line of service that Denovo offers

(xvii) ***Termination Date***. The date on which the Agreement is terminated or expires

(xix) ***Trade Secrets***. Denovo' trade secrets including, without limitation, various computer systems and programs, techniques, developments, improvements, inventions, and processes that are, or may be, produced in the course of Denovo's operations, including any other information not generally known concerning Denovo or its operations, including, products, suppliers, markets, sales, internal costs, costs, margins, profits, client

needs and lists, and the pricing information made available in the Agreement or other information acquired, disclosed, or made known to employees or agents while in the employ of Denovo, which, if used or disclosed, could adversely affect Denovo's business or give competitors an advantage.

(xx) ***Work Product***. Any software modifications, enhancements, interfaces, together with related specifications, design documents, flow charts, documentation, training manuals, reports, and other tangible work product developed by Denovo with Denovo Intellectual Property for the Client

3. ***Scope of Services***. Denovo offers services including, without limitation, consulting services, hosting services, software-as-a-service, managed services and disaster recovery services. Denovo agrees to provide one or more of these services as set forth in the applicable SOW on the terms and conditions set forth in the Agreement. Denovo also offers cloud hosting solutions. The Parties agree that the Services may include advice and recommendations, but all decisions in connection with the implementation of such advice and recommendations shall be the responsibility of, and made by, the Client. Such Services are exclusively for the use of the Client and any of its employees or authorized users.

4. ***Payment***.

(a) ***Fees and Expenses***. Each SOW or Order Document shall set forth the Fees as established by the Multiple Award Schedule Contract.

(b) ***Invoices***. Denovo will provide the Client with an invoice from time to time or when specified in the SOW. Each invoice shall set forth the Fees and Expenses owed to Denovo in reasonable detail, the SOW and/or Order Document reference numbers, and, when applicable, the number of hours spent by Denovo personnel in providing the Services during the period invoiced.

(c) ***Method of Payment***. Unless otherwise agreed to in writing by both Parties, all amounts to be paid to Denovo under the Agreement shall be paid in U.S. dollars and may be made using electronic or automated clearing house (ACH), automatic bill pay mechanisms, or by federal wire transfer to the account or accounts designated in the applicable invoice. If no such account is designated in an invoice, payment should be made to the account below:

Denovo Ventures, LLC
ACH/Wire: CIT Bank, N.A.
ABA/Routing: 322270288
Account: 1822000629
Beneficiary CIT Customer Account Name: Denovo Ventures, LLC

For international wire instructions please contact AR@Denovo-us.com

5. ***Term and Termination***.

(a) ***Term***. This MSA shall commence on the Effective Date and remain in effect for the Term as set forth under the Multiple Award Schedule Contract. unless earlier terminated in accordance with the Multiple Award Schedule Contract.

(b) ***Termination for Cause by Either Party***. Either Party may terminate the Agreement as provided by the Multiple Award Schedule Contract.

6. ***Employment Matters.***

(a) ***Independent Contractor.*** Denovo shall provide Services as an Independent Contractor and nothing contained herein shall be construed to create a relationship of employer-employee or principal-agent. Neither Party is, nor shall represent itself to be, an agent, partner, fiduciary, joint venture, co-owner or representative of the other.

7. ***Assignment and Subcontracting.***

(a) Neither Party shall assign any portion of the Agreement without the express and prior written consent of the other Party.

8. ***Confidentiality.***

(a) ***General.*** Any proprietary information or data (including the terms of the Agreement), Trade Secrets (as defined below) and any other information designated as confidential by either Party is considered confidential (***"Confidential Information"***). To the extent that either Party comes into possession of any Confidential Information of the other Party in connection with the Agreement, such Party agrees to use the Confidential Information of the other Party solely for the purposes of the Agreement, and will not disclose such Confidential Information to any third party except as required under the Freedom of Information Act (FOIA) and (e) below.

(b) ***Exclusions.*** Notwithstanding any provision herein to the contrary, Confidential Information shall not include information that (i) is or becomes publicly available (other than by breach of the Agreement), (ii) was disclosed to the receiving Party on a non-confidential basis from a source other than the disclosing Party, which the receiving Party reasonably believes is not prohibited from disclosing such information as a result of an obligation in favor of the disclosing Party, (iii) is developed by the receiving Party independent of and without reference to any Confidential Information of the disclosing Party, or was known by the receiving Party prior to any disclosure of such information made by the disclosing Party, in each case as evidenced by the receiving Party's written records, or (iv) is disclosed with the written consent of the owner of the Confidential Information.

(c) ***Protection.*** Each Party shall maintain the confidentiality of the Confidential Information of the other Party using at least the same degree of care as it employs in maintaining the confidentiality of its own Confidential Information, but in no event less than a reasonable degree of care.

(e) ***Compelled Disclosure.*** Notwithstanding the above, the receiving Party shall not be in violation of this confidentiality obligation with regard to a disclosure that was in response to a valid order of a court of competent jurisdiction, administrative agency or governmental body, or by any law, rule or regulation, or by subpoena, summons or any other administrative or legal process, or by applicable regulatory or professional standards, provided that the receiving Party provides the disclosing Party with reasonably prior written notice of such disclosure in order to permit the disclosing Party to seek confidential treatment of such information.

(f) ***Trade Secrets.*** Denovo employs trade secrets including, without limitation, various computer systems and programs, techniques, developments, improvements, inventions, and processes that are, or may be, produced in the course of Denovo's operations, including any other information not generally known concerning Denovo or its operations, including, products, suppliers, markets, sales, internal costs, costs, margins, profits, client needs and lists, and the pricing information made available in the Agreement or

other information acquired, disclosed, or made known to employees or agents while in the employ of Denovo, which, if used or disclosed, could adversely affect Denovo's business or give competitors an advantage (***"Trade Secrets"***). Such Trade Secrets contain privileged or confidential commercial or financial information that would result in a competitive disadvantage if disclosed without prior permission by Denovo. Because it would cause irreparable harm to Denovo if any of its Trade Secrets were known to its competitors, it is Denovo's policy that the Trade Secrets not be disclosed to any party other than the Client. In the event that the Client is a public entity and awards a contract to Denovo, the Client shall have the right to disclose as required pursuant to the Freedom of Information Act (FOIA).

9. ***Ownership of Intellectual Property***.

(a) ***Denovo Ownership***.

(i) To the extent that Denovo uses Denovo Background Materials or any of the Denovo Intellectual Property in connection with the performance under the Agreement, Denovo shall retain all right, title and interest in and to Denovo Intellectual Property.

(ii) All rights, title and interest in **Work Product** (installed and configured software and documentation) shall vest in Denovo unless otherwise expressly provided in the applicable SOW.

(iii) Except for any license expressly granted in the Agreement, neither the Client nor any third party shall acquire right, title or interest in or to Denovo Intellectual Property or Work Product (installed and configured software and documentation).

(b) ***Client Ownership***. The Client shall retain all right, title or interest to the Client Data.

(c) ***Infringement Indemnity***.

(i) ***Infringement Indemnity***. Denovo agrees to hold harmless the Client against Claims so long as the Client promptly notifies Denovo in writing of the Claims. Denovo pay any costs or damages that may be finally awarded by a court of competent jurisdiction against the Client. Denovo will not indemnify the Client, however, if the Claim is caused by (i) the Client's misuse or modification of the deliverables in a manner that causes the infringement; (ii) the Client's use of the deliverables in combination with any hardware, software or information not owned or developed by Denovo; (iii) the Client's failure to use corrections or enhancements to such deliverables made available by Denovo, (iv) the Client's distribution, marketing or use for the benefit of third parties of such deliverables or (v) information, specifications, software or materials provided by the Client or a third party. If any deliverable constituting a portion of the Work Product is, or in Denovo's judgment is likely to become, the subject of a Claim, Denovo, at its expense and option, shall either (a) procure the right for the Client to continue using it, (b) replace it with a non-infringing equivalent, (c) modify it to make it non-infringing, or (d) direct the return of the Work Product and refund to the Client the fees paid for such Work Product less a reasonable amount for the Client's use of the Work Product up to the time of return.

(ii) ***Exclusive Remedy***. The foregoing constitutes the Client's sole and exclusive remedy and Denovo's entire liability with respect to infringement claims.

11. ***Limitation of Liability***.

(a) ***Limitation of Liability***. EXCEPT FOR INDEMNIFICATION CLAIMS AND MATTERS RELATING TO BREACHES OF THE SECTIONS ON INTELLECTUAL PROPERTY AND/OR CONFIDENTIALITY, IF DENOVO SHALL BE LIABLE TO THE CLIENT FOR ANY MATTER RELATING TO OR ARISING FROM THE AGREEMENT, WHETHER BASED UPON AN

ACTION OR CLAIM IN CONTRACT, WARRANTY, EQUITY, NEGLIGENCE, INTENDED CONDUCT OR OTHERWISE, THE AGGREGATE AMOUNT OF DAMAGES RECOVERABLE AGAINST DENOVO WITH RESPECT TO ANY AND ALL BREACHES, PERFORMANCE, NONPERFORMANCE, ACTS OR OMISSIONS HEREUNDER WILL NOT EXCEED THE AGGREGATE AMOUNT OF FEES ACTUALLY PAID BY THE CLIENT TO DENOVO UNDER THE SOW OR ORDER DOCUMENT PURSUANT TO WHICH DENOVO IS PERFORMING THE SERVICES OR SELLING THE PRODUCTS GIVING RISE TO SUCH BREACH.

(b) ***Exclusion of Damages***. IN NO EVENT SHALL EITHER PARTY OR ITS PERSONNEL BE LIABLE FOR CONSEQUENTIAL, SPECIAL, INDIRECT, INCIDENTAL, PUNITIVE OR EXEMPLARY DAMAGES, COSTS, EXPENSES, OR LOSSES (INCLUDING, WITHOUT LIMITATION, LOST PROFITS AND OPPORTUNITY COSTS) NOR SHALL THEY BE LIABLE FOR ANY CLAIM OR DEMAND AGAINST THE OTHER PARTY BY ANY THIRD PARTY EXCEPT AS OTHERWISE SPECIFICALLY STATED HEREIN. THE PROVISIONS OF THIS SECTION SHALL APPLY REGARDLESS OF THE FORM OF ACTION, DAMAGE, CLAIM, LIABILITY, COST, EXPENSE, OR LOSS, WHETHER IN CONTRACT, STATUTE, TORT (INCLUDING, WITHOUT LIMITATION, NEGLIGENCE), OR OTHERWISE.

(c) ***Limitation on Actions***. No action, regardless of form, arising under or relating to the Agreement, may be brought by either Party more than one year after the event giving rise to the cause of action has occurred, except that an action for non-payment may be brought by a Party not later than one year following the date of the last payment due to such Party hereunder.

(d) ***Subcontractor Liability***. The exclusions and limitations of liability under the Agreement will operate to the benefit of Denovo's subcontractors under the Agreement to the same extent that such provisions operate to the benefit of Denovo. Any limitations of liability hereunder will be computed for Denovo and its subcontractors in the aggregate. Denovo's subcontractors shall be deemed third-party beneficiaries of this Section.

12. ***Insurance***. Denovo shall at its own expense maintain commercial automobile liability insurance and either commercial general liability insurance or, if necessary, professional liability insurance with minimum coverage as outlined below:

(a) ***Business Automobile Liability***. Covering all vehicles that Denovo owns, hires, or leases with a limit of no less than $1,000,000 per accident/employee.

(b) ***Commercial General Liability***. Including Contractual Liability Coverage, with coverage for products liability, completed operations, property damage and bodily injury, including death, with a minimum limit of no less than $1,000,000 each occurrence and a minimum limit of $2,000,000 in the aggregate.

(c) ***Professional Liability Insurance***. Including Errors and Omissions coverage with a limit of no less than $5,000,000 per occurrence and in the aggregate.

14. ***Authority***. Denovo represents and warrants to the other that (i) it is duly organized, validly existing and in good standing under the laws of the state in which it is organized or incorporated, (ii) it has all requisite power and authority to enter into the Agreement and to perform its obligations hereunder, and the execution of the Agreement and (iii) it has been duly authorized to consummate the transactions contemplated in the Agreement.15. ***Law and Regulation***. Each Party shall be responsible for obeying Laws applicable to its business, including, without limitation, data privacy, intellectual property, employment and tax laws.

16. ***Miscellaneous***.

(a) ***Modification***. The Agreement may not be modified or amended except by a Supplement or other written instrument executed by or on behalf of each of the Parties to the Agreement which specifically states that it amends the Agreement.

(b) ***Waiver***. The failure of either Party to insist upon strict performance of any of the provisions contained in the Agreement shall not constitute a waiver of its rights as set forth in the Agreement, at law or in equity, or a waiver of any other provisions or subsequent default by the other Party.

(c) ***Survival***. The provisions of Sections 4, 6, 7, 8, 9, 10, 11, 13, 15, 16 and 17 shall survive, notwithstanding the termination or invalidity of the Agreement for any reason.

(d) ***Entire Agreement***. The Agreement, including any addenda, exhibits, attachments, Supplements, SOWs Schedules, and the Multiple Award Schedule Contract, constitutes the entire agreement between Denovo and the Client with respect to the subject matter hereof and supersedes all other oral and written representations, understandings or agreements relating to the Agreement.

(e) ***Force Majeure***. Except for payment of money, neither Party shall be liable for any delays or other non- performance resulting from circumstances or causes beyond its reasonable control, including, without limitation, acts or omissions of the other Party or third parties, fire or other casualty, act of God, strike or labor dispute, war or other violence, or any law, order or requirement of any government agency or authority.

(f) ***Notices***. Wherever under the Agreement one Party is required or permitted to give notice to the other Party, such notice shall be in writing and shall be delivered personally, sent by facsimile transmission, sent by nationally recognized express courier, sent by certified mail (return receipt requested), or sent by email. Any such notice shall be deemed given when actually received and shall be addressed as follows:

If to Client:

_____
_____
_____
Attention: _____
Facsimile: _____

If to Denovo:

Denovo
6400 Lookout Road, Suite 101
Boulder, CO 80301
Attention: Legal Department Email:legal-notices@denovo-us.com

With a copy to:

Sloan & Roberts, PLLC Attention: Andrew Roberts 5151 Belt Line Road
Suite 1050
Dallas, Texas 75254-6738 214-987-6070
214-987-6071 fax
Email: andrew@sloanandroberts.com

Either Party may change its address for notices upon giving written notice of the change to the other Party in the manner provided above.

(g) ***No Third Party Beneficiaries***. Nothing contained in the Agreement is intended to confer upon any person (other than the Parties hereto, the Indemnities specifically identified in Section 10, and any subcontractors expressly mentioned elsewhere in the Agreement) any rights, benefits or remedies of any kind or character whatsoever, and, except as otherwise specifically stated herein, no person shall be deemed a third party beneficiary under or by reason of the Agreement.

(h) ***Counterparts***. The Agreement may be executed in two or more counterparts, each of which shall be deemed to be an original, but all of which together shall constitute one agreement binding on the Parties, notwithstanding that both Parties are not signatories to the original or the same counterpart. A facsimile or other electronic copy of a signature on the Agreement shall be acceptable as and deemed to be an original signature.

(i) ***Severability***. If any term or condition of the Agreement or the application thereof to any person(s) or circumstances is held invalid, such invalidity shall not affect other terms, conditions or applications which can be given effect without the invalid term, condition or application. To this end, the terms and conditions of the Agreement are declared severable.

[SIGNATURE PAGE TO FOLLOW]

Denovo

IN WITNESS WHEREOF, Denovo and the Client have executed this MSA as of the date first set forth above.

DENOVO VENTURES, LLC

By: _____

Name: _____

Title: _____

Date: _____

[CLIENT]

By: _____

Name: _____

Title: _____

Date: _____

Denovo

☐ A check in this box indicates that this agreement has been changed from the original.

HOSTING SERVICES STATEMENT OF WORK

This HOSTING SERVICES STATEMENT OF WORK ("***Hosting Services SOW***"), dated as of [00] day of [month], [year] ("***Effective Date***"), is by and between DENOVO VENTURES LLC, a Colorado limited liability company ("***Denovo***"), and [enter company name], a [enter state, enter corporation or LLC] (the "***Client***") (each a "***Party***" and together the "***Parties***").

Pursuant to Section 3 (Scope of Services), in the Master Services Agreement (MSA) and the applicable Hosting Services Supplement, Denovo and Client desire to enter this Statement of Work for the performance by Denovo of certain enterprise hosting services, described herein. This Statement of Work provides details of the Services, related Products if any, Definitions, Service-specific terms, the responsibilities of the party's one- time and recurring fees, Change Order Process, and third party license agreements as applicable.

1. ***Definitions.***

As used in this Statement of Work the following terms shall have the respective meanings set forth herein. Other terms used in this Statement of Work are defined in the context in which they are used and shall have the meanings therein indicated.

(i) ***Agreement.*** Each SOW and/or Order Document(s) combined with the corresponding Supplement Multiple Award Schedule Contract and MSA shall constitute an independent task order contract

(ii) ***Change***. The addition, subtraction or change to any Services related to the SOW; a change that results in increased or reduced fees for applicable Services; and changes to the Service Levels not agreed to as part of the SOW

(iii) ***Change Order Process***. The process by which Changes are made to the Services and more fully described in Section 18 of the SOW

(iv) ***Change Order Request*** or ***COR***. The form the Parties will use to communicate changes to the Services. The Change Order Process is defined in Section 18 of this Statement of Work

(v) ***Customer Care Portal***. A web based service that allows Clients to report problems, request information and view system availability metrics.

(vi) ***Disaster***. An unplanned event or condition that causes a complete loss of availability to production environments hosted by Denovo

(vii) ***Hosting Services***. The services denoted as hosting services in the SOW and the services in connection with the ongoing computing infrastructure and infrastructure support services associated with providing reliable application

(viii) ***Incident***. An unplanned interruption or reduction in the quality of Services that adhere to severity levels set forth in Section 11 of this Statement of Work

(ix) ***Initial Term.*** The period effective from the primary Service Start Date to the planned Services termination date

(x) ***In-Scope.*** Services that are covered under the base agreement between Denovo and Client

(xi) ***Out-Of-Scope.*** Services that are NOT defined as Services under the base agreement between Denovo and Client, and that may require an additional Statement of Work

(xii) ***Service***. Generally, all of the services Denovo agrees to provide the Client as set forth in the SOW

(xiii) ***Service Availability Objective.*** The various specifics of services availability (including without limitation uptime objectives, and downtime credits), which is more fully described in the Hosting Services Supplement

(xiv) ***Service Start Date***. The date Denovo notifies Client (in writing via email) of environment readiness and enables access to the Services for Client use, and monthly recurring billing begins

(xv) ***SOW Term.*** The period of time beginning with the Service Start Date stated in this Statement of Work and continuing through the end of all Initial Term(s) and any renewal term(s).

2. ***Service Levels.*** Denovo will provide the Client with Services to support the Service Level Objectives set forth in Section 4 (Service Levels), of the Hosting Supplement. In addition, Denovo, in its discretion, will provide any services that are necessary to perform the Hosting Services and any additional services to which the Parties may mutually agree through the Change Order Process as set forth in Section 18 of the Hosting Statement of Work.

3. ***Monitoring of the Hosted Environment.*** Base monitoring for systems will be performed via ICMP, SNMP, XML, and/or SOAP for WMI agent queries where applicable. Monitoring is per interval, with thresholds. Monitoring requires in-band communications with the underlying operating system, and local administrative access or domain/group policy access with an administrative account.

Five (5) minute interval with thresholds (if available by device)

- Polling of IP address
- Polling of CPU usage. (LCL 0%, UCL 95%)
- Polling of swap memory usage. (LCL 0%, UCL 95%)
- Polling of physical memory usage. (LCL 0%, UCL 95%) ** NOTE** for Unix/Linux UCL 100%
- Polling of system latency from poller to device (LCL 0ms, UCL 500ms)
- Service monitoring, with per service event generation (all service monitoring is off by default services must be specified for event generation).
- Process monitoring; with per process event generation (all process monitoring is off by default; critical processes must be specified).

Fifteen (15) minute interval with thresholds where applicable (if available by device)

- Polling of interface statistics for IO throughput, (LCL -1%, UCL 94%)
- Polling of interface statistics for discards, (LCL -1, UCL 1000)
- Polling of interface statistics for errors (CRC, FCS, RUNT, JUMBO), (LCL -1, UCL 30)
- Polling of file system usage (LCL 0%, UCL 93%)
- One (1) hour interval or longer with thresholds where applicable (if available by device)

- Software package monitoring, revision and installation date
- Polling of chassis health (Power, Temp, Fan Status)

4. ***Management of the Hosted Environment.*** Denovo uses a variety of software tools to monitor the availability and performance of Client's production services environment and the operation of infrastructure and network components.

Denovo engineers will perform the following In-Scope services:

- Reactive Patch management addition or removal, including operating system, and drivers. Patching is driven by the necessity due to an incident or identified critical/exploited vulnerability
- Creation/removal of user accounts
- Creation/modification of scripts and/or batch files for log management, common tasks
- Group policy creation or modification for Active Directory or system roles
- Software package and licensing audits

Denovo is not responsible for the following Out-Of-Scope Services:

- General consultation and system design/architecture
- Major Release Upgrades for the Application (ie. 9.0 to 9.1, that would be a separate SOW)

5. ***Application installation***

Technical Managed Services. Denovo will provide the Client with Technical Managed Services including; Configurable Network Computing (CNC) and Database Administration (DBA) Services. In addition, Denovo, in its discretion, will provide any services that are necessary to perform the Technical Managed Services and any additional services to which the Parties may mutually agree through the Change Order Process.

Denovo has a knowledgeable and experienced team of CNC consultants to help the Client adapt software solutions to the Client's business requirements. With Denovo CNC Managed Services, the Client will receive system administration and expert technical support services, including package management, regular JD Edwards updates, performance monitoring and troubleshooting, without the business risk associated with depending too heavily on one individual. Our US-based Managed Services for the Client's JD Edwards applications will be provided through remote means, between the hours of 7:00 am – 5:00 pm Mountain Time Monday through Friday, excluding public holidays.

The following is a list of Technical Managed Services that are In-Scope:

Services EnterpriseOne	Frequency	Included	Denovo/CNC	Time Period
Printer Setup and Maintenance	As Needed	Yes	Yes	7AM-5PM
Development Package Build-Update(DV/PY)	3-Weekly	Yes	Yes	7AM-5PM
Development Package Build-Full(DV)	1-Monthly	Yes	Yes	7AM-5PM
Prototype Package Build-Full(PY)	1-Monthly	Yes	Yes	7AM-5PM
Production Package Build-Update	1-Weekly	Yes	Yes	7AM-5PM
Production Package Build-Full	1-Monthly	Yes	Yes	7AM-5PM
Environment Refresh-Data/Objects	1- Quarterly	Yes	Yes	7AM-5PM

Environment/Path Code/OMW Maintenance	As Needed	Yes	Yes	7AM-5PM
OCM Maintenance	As Needed	Yes	Yes	7AM-5PM
Purge PrintQ and log directories. Purge Workflow	Monthly	Yes	Yes	7AM-5PM
Technical Assistance and Troubleshooting	As Needed	Yes	Yes	7AM-5PM
Technical Assistance and Troubleshooting-Sev 1	As Needed	Yes	Yes	24/7
Services				
Installation of EnterpriseOne ESU's	As Needed	Yes	Yes	7AM-5PM
Installation of EnterpriseOne Tools releases	Annually	Yes	Yes	7AM-5PM
Installation of EnterpriseOne application updates	As Needed	Yes	Yes	7AM-5PM
Security Administration	As Needed	Yes	Yes	7AM-5PM
Technical Diagnosis/Performance/Design Improvements				
System Audit and Recommendation	Annual	Yes	Yes	7AM-5PM
Security Audit and Recommendation	Annual	Yes	Yes	7AM-5PM
Performance Tuning and Optimization	As Needed	Yes	Yes	7AM-5PM
Monitoring Services				
Infrastructure Monitoring	Ongoing	Yes	Yes	24/7

In order for Client's existing environment to qualify for managed Services, the following requirements must be met:

- All Servers, Desktop PC's and Notebooks/Laptops with Microsoft Windows Operating Systems must be running a supported version as it relates to the ERP version of the software and have all of the latest Microsoft Service Packs and Critical Updates installed. This is especially important as it relates to supported browser versions.
- All Desktop Software must be Genuine, Licensed and Vendor-Supported.
- The environment will have a currently licensed, up-to-date and Vendor-Supported server-based antivirus solution protecting all servers and developer workstations.

The following Services are NOT included and are considered Out-Of-Scope:

- The cost of any Software Renewal or Upgrade Fees of any kind.
- The cost of any 3rd party vendor or manufacturer support or incident fees of any kind.
- The cost to bring Client's environment up to minimum standards required for Services.
- Failure due to acts of God, building modifications, power failures or other adverse environmental conditions or factors not under control of Denovo employees.
- Maintenance of other application software packages besides EnterpriseOne.
- Programming (modification of software code) and program (software) maintenance unless as specified in the Services table.
- Training Services of any kind unless specified in the Services table.

6. ***Application Managed Services.*** Denovo will provide the Client with Application Managed Services including; JD Edwards functional support, Business Process Analysis, application configuration and troubleshooting. In addition, Denovo, in its discretion, will provide any services that are necessary to perform the Application Managed Services and any additional services to which the Parties may mutually agree through the Change Order Process.

Application Support Services allows our Clients to be supported by a Functional Expert in a particular area of an application, such as Financials, HR, One View Reporting, creating UPKs (videos on how a process works within JD Edwards from the end-users' perspective). With its extensive experience in JD Edwards' applications and technology, Denovo provides functional application support delivered as Application Managed Services.

Application Managed Services can help IT organizations to reduce costs while improving support of their Oracle JD Edwards (JDE) ERP environment.

Examples of Application Managed Services for JD Edwards include:

- Assistance with annual 1099 creation
- Help with reports (and/or One View Reporting)
- How to do a specific function within a specific module (eg. GL, A/R, A/P, Inventory Control, or any other JD Edwards Module)

Denovo's team is schooled in process development and process improvements, and we apply these skills in our Client engagements. By embracing a service model governed by Service Availability Objective, Denovo can transform the delivery of application support within an organization. These improvements enable Clients to reallocate scarce, expensive JD Edwards development/support skills to more critical tasks. Application support will then be delivered by experienced Denovo employees who are available 24x7x365 to help resolve EnterpriseOne production problems.

7. ***Development Managed Services.*** If applicable, Denovo will provide the Client with Development Managed Services including; custom report development, custom modifications to existing applications and custom application development of net new applications. In addition, Denovo, in its discretion, will provide any services that are necessary to perform the Development Managed Services and any additional services to which the Parties may mutually agree through the Change Order Process.

Denovo will adhere to Client's application development policies and procedures if they are provided, if not, Denovo will adhere to the industry best practices we use as our standard. Denovo will develop, recommend and document changes to Client's application development policies and procedures manuals.

8. ***Services Scheduling.*** Application and Development Managed Services hours are best used when scheduled for specific projects, such as building a necessary report, helping to confirm a workflow, used to train employees on a specific process within JD Edwards, etc. To get the most benefit from the monthly hours and ensure the right resources are available when needed by the Client organization, we schedule our resources as far in advance as possible. This scheduling allows us to allocate the right resources by reserving them one week (minimum) in advance of the project. Hours are allocated on a monthly basis and must be fully consumed within the month, or the hours will no longer be available.

This approach helps Clients and Denovo. Recognizing that hours not used will not be available in the following month, Clients make the effort to schedule work that needs to be done rather than pushing it off for "later". For Denovo, scheduling of staff is easier because Clients submit their requests earlier rather than waiting until the end of the year or end of the quarter

Reserving staff can be accomplished in two ways:

1. The Client chooses a task start date that works best for them and sends the schedule to Denovo via the Customer Care Desk (Service Desk). Activities can be scheduled anywhere from one week to several months in advance. Clients simply open a ticket with the specifics of what support

they need (training on using a specific feature within a module, general questions, guidance on a process, specific report details, etc.) and when they have blocks of time available (eg. Mon 8-12, Tue 2-4 and/or Thursday 3-5). Service tickets are then assigned to the corresponding Denovo resource. The Denovo resource will confirm with the Client the times that match both the Client and the Denovo schedule. This allows all parties to ensure that when they need to work on a specific item, they can with the resources they need available. Optionally, the Client can request assistance from the Denovo Account Representative or the Denovo Project Manager.

2. The Client can also open a ticket that requests immediate action. These requests are often done for smaller, time sensitive items, such as when an auditor requests a special report. In these special cases, the Client may send the details of what is needed, the timeline of when it is needed, and a few time slots during which this service can be performed.

Using the Customer Care Portal as the hub for Application Support and Application Development requests helps Clients and Denovo track progress, deliverables and the hours consumed.

9. ***Customer Care Services (a.k.a. "Service Desk")***

Customer Care Services are high priority for Denovo and the focal point for Client interaction. Customer Care provides first and second level support. Denovo handles support of JD Edwards and 3rd party products (front end analytics, reporting tools, integration tools, or others) as follows:

1. When a user has an issue, it is communicated (via phone, email or Customer Care Portal) to the Service Desk by creating a Service Ticket.
2. The Service Desk reviews the Service Ticket and assigns it to the person responsible for supporting that Service Area (e.g., JD Edwards Financials, HR, One View Reporting or 3rd party applications such as ADP, Fusion Middleware, Create!forms, etc.). Depending on the Service Area, Denovo may have one or more persons assigned to support that function. It may be unique to a specific Client (because of uniqueness in their business needs); it may be unique to release levels (some staff support older release and some support more current releases); or it may be a function of the Client's Service Level Agreement (some Clients may have specific named persons to support service areas).
3. The Denovo person responsible receives the Service Ticket through Denovo's automated workflow system and communicates with the Client immediately upon receipt that they have been assigned the Service Ticket and are working their issue. This may result in an exchange of dialog/e-mails to further understand the issue. The person responsible will be a person knowledgeable about Client's specific Service Area.
4. If the person responsible is not able to personally resolve the issue they will call upon other members of the Denovo team either in the same Service Area or in a cross-functional area if the specific issue may relate to something outside of the product in question (e.g. a JDE application is not performing as expected, but the person responsible determines that the issue is not a JDE Application issue but rather a integration middleware issue and needs assistance from another Service Area).
5. Once the issue is resolved, it will be documented both at the Service Desk and with the individual who requested the Service Request.

Support and Escalation - Denovo will respond to Client's tickets under the provisions of Service Level Standards, and with best effort after hours or on holidays. Client must open tickets via phone, email or our web portal to our Service Desk. Each service request will be assigned a Trouble Ticket number for tracking.

Service outside Normal Working Hours - Emergency services (Severity 1) may be performed outside of the hours of 7:00 am – 5:00 pm Mountain Time Monday through Friday, excluding public holidays, shall not be billed separately and are included in this service. All other Services will be performed during coverage hours.

10. ***Hosting Support Policy.***

The support described in this Hosting Support Policy applies only for Denovo Hosting Services. The following table shows the response time commitment for incident-based issues.

Incident / Severity Definitions	Severity Level	Response Time
Client's production use of the Denovo Hosting Service is stopped or so severely impacted that Client cannot reasonably continue work. Client experiences a complete loss of service. The impacted operation is mission critical to the business and the situation is an emergency. A Severity 1 service request has one or more of the following characteristics: 1. Data corrupted 2. A critical documented function is not available 3. Service hangs indefinitely, causing unacceptable or indefinite delays for resources or response 4. Service crashes, and crashes repeatedly after restart attempts Denovo will use reasonable efforts to respond to Severity 1 service requests within 15 Minutes. Denovo will work 24x7 until the Severity 1 service request is resolved, a reasonable work-around is put in place, or as long as useful progress can be made. Client must provide Denovo with a contact during this 24x7 period to assist with data gathering, testing, and applying fixes. Client is required to propose this severity classification with great care, so that valid Severity 1 situations obtain the necessary resource allocation from Denovo.	**Severity 1**	1 Hour
Client experiences a severe loss of service. Important features of the Denovo Hosting Services are unavailable with no acceptable workaround; however, operations can continue in a restricted fashion.	**Severity 2**	1 Hours
Client experiences a minor loss of service. The impact is an inconvenience, which may require a workaround to restore functionality.	**Severity 3**	4 Hours
Client requests information, enhancement, or documentation clarification regarding the Denovo Hosting Service, but there is no impact on the operation of such service. Client experiences no loss of service.	**Severity 4**	8 Hours

At the time Denovo accepts a service request, Denovo will record an initial severity level of the service request based on the above severity definitions. Denovo's initial focus, upon acceptance of a service request, will be to resolve the issues underlying the service request. The severity level of a service request may be adjusted.

If, during the service request process, the issue no longer warrants the severity level currently assigned based on its current impact on the production operation of the applicable Hosting Service, then the severity level will be downgraded to the severity level that most appropriately reflects its current impact.

If, during the service request process, the issue warrants the assignment of a higher severity level than that currently assigned based on the current impact on the production operation of the applicable Hosting Service, then the severity level will be upgraded to the severity level that most appropriately reflects its current impact.

Client's shall ensure that the assignment and adjustment of any severity level designation is accurate based on the current impact on the production operation of the applicable Hosting Service. Customer acknowledges that Denovo is not responsible for any failure to meet performance standards caused by Customer's misuse or misassignment of severity level designations.

For service requests that are escalated to the next level manager, the Denovo support analyst will engage the Denovo service request escalation manager who will be responsible for managing the escalation. The Denovo service request escalation manager will work with the Client to develop an action plan and allocate the appropriate Denovo resources. If the issue underlying the service request continues to remain unresolved, the Client may contact the Denovo service request escalation manager to review the service request and request that it be escalated to the next level within Denovo. To facilitate the resolution of an escalated service request, the Client is required to provide contacts within the Client's organization that are at the same level as that within Denovo to which the service request has been escalated.

Client questions or requests for an exception to the Denovo Hosting and Delivery Policy must be made via a service request.

Hosting Support Tiers - The following details and describes our Support Tier levels:

Support Tier	Description
Tier 1 Support	All support incidents begin in Tier 1, where the initial trouble ticket is created. The issue is identified and clearly documented, and basic hardware/software troubleshooting is initiated.
Tier 2 Support	All support incidents that cannot be resolved with Tier 1 Support are escalated to Tier 2, where more complex support on hardware/software issues can be provided by more experienced engineers.
Tier 3 Support	Support Incidents that cannot be resolved by Tier 2 Support are escalated to Tier 3, where support is provided by our most experienced, senior engineers who have the ability to collaborate with 3rd party (vendor) support engineers to resolve the most complex issues.

11. ***Backups.*** Denovo uses IBM Tivoli Storage Manager (TSM), a client/server tool for backing up and/or archiving data from various machines to a central server or tape. TSM performs a full back up the first time it backups a client's environment. After that it performs incremental backups or selective backups depending upon Client requirements. By default, Denovo will keep 14 versions of Client production data and 7 versions of Client test and development data. Two sets of tapes are created for each backup, with one being stored off- site for archiving purposes and one stored onsite for recovery and restore purposes. By default, Denovo uses an indefinite archiving and retention period, thus, we do not reuse archive tapes.

Backups are run nightly on all servers. Tapes are duplicated and sent off site daily. Any Client proposed Changes to Denovo's backup and retention policies require the Client to submit a Change Order Request. Denovo can help with best practices but it is up to the Client to determine acceptable policies. Denovo will monitor the Client's backups and an event will be triggered and a ticket opened after two consecutive failed backups. Engineers have 16 business hours to start work on the failed backups. Client assistance may be needed to help resolve the issue. If a new Device (Physical or Virtual) is needed to be backed up, a new Change Order Request must be submitted.

12. ***Disaster Recovery.*** Denovo is committed to minimizing down time due to any disasters or equipment failures. Disaster Recovery services are intended to provide service restoration capability in the case of a major disaster, as declared by Denovo, that leads to loss of a data center and corresponding service unavailability. These Disaster Recovery services apply only to Client production environments hosted by Denovo.

For the purposes of this policy, a "disaster" means an unplanned event or condition that causes a complete loss of availability to production environments hosted by Denovo. Denovo Hosting Services maintains a redundant and resilient infrastructure designed to maintain high levels of availability and to recover services in the event of a significant disaster or disruption. Denovo designs its Hosting services using principles of redundancy and fault-tolerance with a goal of fault-tolerance of a single node hardware failure.

Denovo Hosting Services can provide an infrastructure that incorporates a comprehensive data backup strategy. The Denovo Hosting can include redundant capabilities such as power sources, cooling systems, telecommunications services, networking, application domains, data storage, physical and virtual servers, and databases.

Denovo has three separate data centers that can function as primary and secondary sites for Denovo Hosting Services. Customer's production standby (secondary site) environment will reside in a data center separate from Customer's primary site. Denovo will commence the disaster recovery plan under this policy upon its declaration of a disaster, and will attempt to recover the production data and use reasonable efforts to re- establish the production environment at the secondary site.

Customer data is replicated in physically separate facilities in order to restore full services in the event of a disaster at a primary site. Backups are for Denovo's use in the event of a disaster.

Disaster recovery operations apply to the physical loss of infrastructure at Denovo facilities. Denovo reserves the right to determine when to activate the Disaster Recovery Plan. During the execution of the Disaster Recovery Plan, Denovo provides regular status updates to the Client.

(a) ***Disaster Recovery Services*** Denovo provides two options for Disaster Recovery: (1) "Instant Recovery" and (2) "Traditional Recovery". Descriptions of both offerings are listed below. Denovo will use one of several data centers for Disaster Recovery Services.

(i) ***Instant Recovery – Option One*** Instant recovery is designed to offer the quickest Recovery Time Objective (RTO). Depending upon the volume of servers to recover, the servers can be online and ready within three (3) hours. This solution also offers the most aggressive Recovery Point Objectives (RPO) in the industry and is designed to continuously replicate your data to our disaster recovery site. Continuous replication ensures near instant recovery. Another key benefit of Instant Recovery is the simplicity of fail back. After the disaster has been cleared, Client will have the ability to instantly fail back to the main data center without data loss and minimal outage.

(ii) ***Traditional Recovery – Option Two*** Traditional recovery is designed to be a more cost effective solution with less aggressive RTO and RPO. Traditional Recovery uses a tape recovery system to rebuild the environment if a Disaster Recovery is declared. There are different levels of RPO which Client can select, with the most common option being 24 hours. This solution is designed to have an RTO of 72-hours. Using Traditional Recovery, the fail back to the primary data center will require a tape "backup and restore" at the main data center.

(b) ***Recovery Details*** The disaster recovery service will utilize one of Denovo's data centers or a partner service, depending on the final requirements developed by Client and Denovo. Client will be entitled to one 48- hour recovery rehearsal per year, with 90-day notice. Denovo Disaster Recovery services are designed to allow connections from anywhere in the world so there is no need to travel to a Disaster Recovery site. This design helps reduce costs and increase the ability to meet aggressive RTOs.

(c) ***Recovery Time Objective*** Recovery time objective (RTO) is the maximum period of time between Denovo's decision to activate the recovery processes under this Policy to failover the service to the point at which Customer can resume production operations. If the decision to failover is made during the period in which an upgrade is in process, the RTO extends to include the time required to complete the upgrade. The RTO does not apply if any data loads are underway when the disaster occurs.

(e) ***Recovery Point Objective.*** Recovery point objective (RPO) the maximum period of data loss measured as the time from which the first transaction is lost until Denovo's declaration of the disaster.

Note: the RTO and RPO do not apply to Client customizations that depend on external components or third-party software. During an active failover event, non-critical fixes and enhancement requests are not supported. Customer will be solely responsible for issues arising from third party software and customizations to programs.

(f) ***Disaster Recovery Objectives.*** The following are the Denovo's disaster recovery support objectives:

(i) Denovo's top priority and objective is human health and safety.

(ii) Maximize the effectiveness of contingency operations through the established disaster recovery plan:

- Detect the service disruption or outage, determine the extent of the damage and activate the plan.
- Support the restoration of temporary operations, at a secondary site if applicable.
- Support the restoration of processing capabilities and resume operations.

(g) ***Disaster Recovery Costs*** For a summary of Disaster Recovery fees, please refer to Section 15 (Service Fees).

13. ***Assumptions and Limitations***

Additional support beyond the items covered under this SOW may be purchased from Denovo per the terms of the Multiple Award Schedule Contract.

Client is responsible for understanding sizing requirements for their environment. Denovo assumes Client has a general understanding and working knowledge of:

- Networking protocol (TCP, UDP, IP)
- Firewall policies
- Storage allocation requirements
- Operating system fundamentals

Denovo shall provide one (1) training session for multiple individuals via a web session. Additional requests for training may be subject to time and material fees as set forth in the Multiple Award Schedule Contract.

Client shall provide assistance in testing environment to ensure it is environment ready. Client shall provide all application support (Such as: updates, fixes, troubleshooting, etc.).

Any Change implemented by the Client that could affect the performance of Denovo's tools (i.e. management, monitoring, backup, anti-virus, etc.) or Denovo's ability to monitor/manage/support the environment must be agreed to by both parties, in writing, prior to implementation.

Client shall be responsible for all disaster recovery planning and services, including processes, equipment and performance. Disaster Recovery is not included unless specifically noted in this SOW, at which point, Client shall be responsible for recovery planning within the Client's company and environment as well as testing at least once a year.

Client is responsible for data migration of existing data.

Client shall advise Denovo of regulatory requirements or obligations which may affect Denovo's provision of the Services.

Denovo is not responsible for any Outage caused by other activities Client directs, denial of Service attacks, national or worldwide incidents of computer Viruses, natural disasters, changes resulting from government, political, or other regulatory actions or court orders, strikes or labor disputes, acts of civil disobedience, acts of war, acts against parties (including carriers and Denovo's other vendors), and other force majeure items as set forth under Denovo's Master Services Agreement provided that Denovo utilizes commercially reasonable efforts under the circumstances to minimize the impact of the force majeure event on the Client.

Client will not use, or permit use of, the Services in a manner, which is (i) illegal; (ii) infringes the patent, copyright, trademark, confidential information or intellectual property rights of a third party; or (iii) violates general standards of behavior on the Internet, collectively "Service Misuse". Client shall be responsible for any such Service Misuse and indemnify Denovo, its employees, affiliates, agents, licensors, suppliers and subcontractors against any liabilities arising from or relating to any such Service Misuse.

Client's system will have potential security vulnerabilities, even with the Services, including, but not limited to, the vulnerability of Client's network or systems to (i) access by persons within Client's organization which exceeds the authority granted to such persons; (ii) snooper attacks by persons granted access by Client to its network to obtain and misuse access codes, passwords and other data; (iii) physical access to equipment at Client sites; and
(iv) access to passwords and similar information that is written down or otherwise not afforded an appropriate level of protection by Client. Denovo does not guarantee that the Services will eliminate all risk or prevent damage from network or system security breaches such as the above.

14. ***Service Fees***

The following table outlines proposed one-time and monthly fees based on the Service options selected. Fees will commence the month following the Service Start Date. Taxes are not included. All fees are in U.S. dollars.

Denovo

Service Description	One Time Setup Fee	Monthly Fees
Denovo Hosting Services (Private Cloud) This service includes hardware, software, OS, application monitoring, proactive performance monitoring, 24/7- production support, Service Desk support, trouble tickets, Customer Care Portal, OS patching and OS upgrades. Denovo Hosting Services are described in ***Section 3 (Service Levels)***, ***Section 4 (Monitoring of the Hosted Environment)***, and ***Section 5 (Management of the Hosted Environment),*** of the Hosting Services Statement of Work.	[$0000]	[$0000]
Technical Managed Services This service includes 24/7-production support and all CNC and DBA services. Denovo Technical Managed Services are described in ***Section 6 (Technical Managed Services),*** of the Hosting Services Statement of Work.		[$0000]
Application Managed Services This service may include application functional support, business process analysis, application configuration and troubleshooting. Application Managed Services are described in ***Section 7 (Application Managed Services)*** of this Hosting Services Statement of Work.		[$0000]
Development Managed Services This service may include custom modification or application development services. Denovo Development Managed Services are described in ***Section 8 (Development Services)*** of this Hosting Services Statement of Work.		[$0000]
Disaster Recovery Services Includes Disaster Recovery Services Option [1] or [2] RTO: [00] hours RPO: [00] hours Denovo Disaster Recovery Services are described in ***Section 13*** **(Disaster Recovery)** of the Hosting SOW.		[$0000]
Oracle JD Edwards Software		
Total One Time Setup	[$0000]	
Total Ongoing Monthly		[$0000]

(a) ***Fee Payment Schedule for Hosting Services.*** Unless otherwise specified, Denovo will invoice the Client on quarterly (3 Month) basis for Hosting Services to be delivered over the following three months, on the first of the month, commencing the month of the Service Start Date at the rates specified in ***Section 15.***

(b) ***Fee Payment Schedule for Consulting Services.*** Unless otherwise specified, Denovo will invoice the Client on a Bi-weekly basis, at the hourly rate specified in Section 15 (Service Fees), for additional Consulting Services delivered, but not included in the base agreement.

15. ***Pricing Assumptions.*** If it is necessary for Denovo to provide Time and Materials (T&M) Services for additional Client network discovery, the Denovo Professional Consulting Services group will provide a separate Statement of Work that defines timelines, tasks and the services rate per hour required to complete the work per the hourly rates established under the Multiple Award Schedule contract.

Client is responsible for proper execution of the agreement, any omission of pre-requisites or addition of services by Client shall result in a project Change Order Request, or support will be best effort on a next business day basis.

Additional Services requested by Client and added to the SOW within 90 days of Client's and Denovo's acceptance of the SOW ("Acceptance") will be priced according to the fees established under the Multiple Award Schedule Contract. Any additional Services requested by Client after 90 days from the date of Client and Denovo's Acceptance of the SOW will be subject to the ~~then current~~ rates for such Services set forth in the Multiple Award Schedule Contract.

Additional Services may be added or deducted via the Change Order Request process as defined in ***Section 8*** of this Statement of Work.

16. ***Statement of Work Acceptance.***

Subject to the notice provisions below, Denovo reserves the right to modify or discontinue Services and to introduce new Services and features. Denovo may make available to Client all new services and features offered to all of our other clients. Denovo may, in our sole discretion, discontinue a Service at any time. Denovo will give the Client 90 days' notice of the discontinuance of a Service. Discontinuance does not affect Orders accepted prior to the date of discontinuance, but new Orders for a Service will not be accepted after the date the Service is discontinued.

Denovo may, in our sole discretion, modify a Service from time to time, for example to work with new third party products and services and to stay current with changing standards. Denovo will give the Client 30 days written notice of the modification of a Service and of substantive modifications to a Service Description. Such modifications will affect both existing Services and new Orders. Within sixty (60) days of receipt of a notice of modification to a Service, Client may cancel Order(s) for that Service without liability for cancellation charges if the modification has made the Service materially less useful to Client.

17. ***Change Order Process.***

A Change Order Request ("***COR***") is the method by which either Party may communicate and eventually effectuate Changes to the Services. Please see the Change Order Request form. Only a duly warranted contracting officer may request a Change on behalf of the Client if the Client is the federal government.

The Client or Denovo may request Changes by initiating the Change Order Process. To initiate the Change Order Process, the Party requesting the Change must fill out the Change Order Request form attached hereto and submit it to the appropriate project leader of the other Party. The Change Order Request must at a minimum describe the requested Change in sufficient detail for the Client and Denovo to make a reasonable assessment of the request.

The Client and Denovo will review the Change Order Request promptly and follow up with each other as necessary for further clarification or to discuss the impact that the Change will have on the Services, deliverables, implementation schedule, Service Availability Levels, terms and conditions, and Client fees. A

Change Order Request will not be effective nor will a Change be implemented unless the Change Order Request is executed by duly authorized representatives from both the Client and Denovo.

Upon mutual acceptance of the Change Order Request, it becomes part of the entire agreement between Denovo and the Client with respect to the subject matter hereof. Denovo will provide a copy of all mutually accepted Change Order Requests to the Client for future reference.

Each Party will be responsible for all costs and expenses incurred by it in participation of the Change Control Process unless otherwise agreed in writing. The failure of either Party to insist upon strict performance of the Change Order Request process for every Change shall not constitute a waiver of its rights as set forth in the Agreement, at law or equity.

[SIGNATURE PAGE TO FOLLOW]

Denovo

IN WITNESS WHEREOF, Denovo and the Client have executed this Statement of Work as of the date set forth above.

DENOVO VENTURES, LLC

By: _____

Name: _____

Title: _____

Date: _____

[CLIENT]

By: _____

Name: _____

Title: _____

Date: _____

CITY OF SANTA FE

Date: **October 23, 2024**

To: **Governing Body**

Regina Wheeler
Regina Wheeler (Oct 29, 2024 14:06 MDT)

Via: **Regina Wheeler, Public Works Department Director**
Melissa A. McDonald, Parks and Open Space Division Director MM
Sean Moody, Capital Projects Manager SM

From: **Scott A. Overlie, Parks and Open Space Project Manager** sao

---

ACTION:
Request for Approval of a New Mexico Department of Finance and Administration (DFA) General Fund 93100 Capital Appropriation Project Grant 24-I3147 in the Amount of $240,000 to Replace the Santa Fe River Pedestrian Bridge at Shelby Street with a Reversion Date of June 30, 2028. (Scott A. Overlie, Parks and Open Space Project Administrator; saoverlie@santafenm.gov)

1. Request for Approval of a Budget Adjustment Resolution (BAR) to Allocate the DFA Funding in the Amount of $240,000 into FY25 Revenue and Parks and Trails CIP WIP Construction.

BACKGROUND AND SUMMARY:
The existing pedestrian bridge across the Santa Fe River at Shelby Street has been determined by a structural engineer to be unsafe. Staff have installed temporary fencing and signage to prevent access to the bridge. Due to the degradation of the concrete foundations and the condition of the bridge, repairs are not possible. This grant will be used to begin design of a replacement bridge options including a prefabricated bridge. Final design will be required to meet historic design review requirements. Design is estimated to cost $265,000 and is expected to complete in 2025. Demolition and construction phases will begin after design is approved, costs are fully determined, and additional funding is secured.

FUNDING SOURCE: New Mexico Department of Finance and Administration
Fund Name/Number: Parks/Trails CIP/355
Munis Org Name/Number: Parks/Trails CIP/3559980
Munis Expenditure Object Name/Number: WIP Construction/572970
Munis Revenue Object Name/Number: DFA / 490210
Project Ledger Number: PWD2535518

If the project is grant funded? List grant award number: 24-I3147

Grant Manager / Accounting Officer Approval: Matthew Bonifer Matthew Bonifer (Oct 29, 2024 16:42 MDT) **Date:** Oct 29, 2024
Comment/Exceptions: _____

Budget Officer Approval: Andy Hopkins **Date:** Oct 29, 2024
Comment/Exceptions: _____

CAPITAL ASSET (will this procurement result in a tangible item that costs more than $5,000?):

☒ Yes | ☐ No

Repair or Replacement of Existing Equipment:

☐ Yes | ☒ No

Capital Project:
(New and improvement projects that are going to cost $10,000 or more)
☒ Yes | ☐ No

Anticipated length of project: Phase I Design through 2025

Asset Manager Approval: _____ **Date:** _____
Comment/Exceptions: _____

Department Approvals:
IT Components: ☐ **Yes** | ☒ **No**
Vehicles: ☐ **Yes** | ☒ **No**
Facilities, Furniture, Fixtures, Equipment: ☐ **Yes** | ☒ **No**

Approval: _____ **Title:** _____ **Date:** _____

Approval: _____ **Title:** _____ **Date:** _____

Comment & Exceptions: _____

Department Contract Administrator Contact Info:
Scott A. Overlie, Project Manager, Phone (505) 231-6194
Email Address: saoverlie@santafenm.gov

ATTACHMENTS:
Grant Agreement
BAR
Project Ledger Form

STATE OF NEW MEXICO
DEPARTMENT OF FINANCE AND ADMINISTRATION
GENERAL FUND 93100 CAPITAL APPROPRIATION PROJECT

THIS AGREEMENT is made and entered into as of the date it is executed, by and between the Department of Finance and Administration, hereinafter called the "Department" or abbreviation such as "DFA/LGD", and **CITY OF SANTA FE**, hereinafter called the "Grantee". This Agreement shall be effective as of the date it is executed by the Department.

RECITALS

WHEREAS, in the **Laws of 2024, Chapter 66, Section 28, Paragraph 505**, the Legislature made an appropriation to the Department, funds from which the Department is making available to the Grantee pursuant to this Agreement; and

WHEREAS, the Department is granting to Grantee, and the Grantee is accepting the grant of, funds from this appropriation, in accordance with the terms and conditions of this Agreement; and

WHEREAS, pursuant to Sections 9-6-5 and 9-6-5.1 NMSA 1978, the Secretary of the Department of Finance and Administration has the power and the authority to (i) maintain long-range estimates and plans for capital projects and develop standards for measuring the need for, and utility of, proposed projects; (ii) contract for, receive and utilize any grants or other financial assistance made available by the United States government or by any other source, public or private; (iii) provide planning and funding assistance to units of local government, council of government organizations, Indian tribal governments situated within New Mexico, and to nonprofit entities having for their purpose local, regional or community betterment; (iv) incident to any such programs, may enter into contracts and agreements with such units of local government, council of government organizations, Indian tribal governments, nonprofit entities and the federal government; and (v) delegate such authority to the Local Government Division as being necessary and appropriate to such delegation;

AGREEMENT

NOW, THEREFORE, in consideration of the mutual covenants and obligations contained herein, the parties hereby mutually agree as follows:

ARTICLE I. PROJECT DESCRIPTION, AMOUNT OF GRANT AND REVERSION DATE

A. The project that is the subject of this Agreement is described as follows:

24-I3147 $240,000.00 APPROPRIATION REVERSION DATE: June 30, 2028

Laws of 2024, Chapter 66, Section 28, Paragraph 505, Two Hundred Forty Thousand ($240,000.00), from the General Fund 93100 to plan, design, demolish and construct a pedestrian bridge across the Santa Fe river at Shelby street in Santa Fe in Santa Fe county;

The Grantee's total reimbursements shall not exceed Two Hundred Forty Thousand $240,000.00 (the "Appropriation Amount") minus the allocation for Art in Public Places ("AIPP amount")[1], if applicable, Zero $0.00, which equals Two Hundred Forty Thousand $240,000.00 (the "Adjusted Appropriation Amount").

In the event of a conflict among the Appropriation Amount, the Reversion Date, as defined herein and/or the purpose of the Project, as set forth in this Agreement, and the corresponding appropriation language in the laws cited above in this Article I(A), the language of the laws cited herein shall control.

This project is referred to throughout the remainder of this Agreement as the "Project"; the information contained in Article I(A) is referred to collectively throughout the remainder of this Agreement as the "Project Description." [Optional Language if special conditions apply. Attachment A sets forth additional or more stringent requirements and conditions, which are incorporated by this reference as if set forth fully herein. If Optional Attachment A imposes more stringent requirements than any requirement set forth in this Agreement, the more stringent requirements of Attachment A shall prevail, in the event of irreconcilable conflict.] The Grantee shall reference the Project's number in all correspondence with and submissions to the Department concerning the Project, including, but not limited to, Requests for Payment and reports.

ARTICLE II. LIMITATION ON DEPARTMENT'S OBLIGATION TO MAKE GRANT DISBURSEMENT TO GRANTEE

A. Upon the Effective Date of this Agreement, for permissible purposes within the scope of the Project Description, the Grantee shall only be reimbursed monies for which the Department has issued and the Grantee has received a Notice of Department's Obligation to Reimburse Grantee (hereinafter referred to as "Notice of Obligation"). This Grant Agreement and the disbursement of any and all amounts of the above referenced Adjusted Appropriation Amount are expressly conditioned upon the following:

i. Irrespective of any Notice of Obligation, the Grantee's expenditures shall be made on or before the Reversion Date and, if applicable, an Early Termination Date (i.e., the goods have been delivered and accepted or the title to the goods has been transferred to the Grantee and/or the services have been rendered for the Grantee); and

ii. The total amount received by the Grantee shall not exceed the lesser of: (a) the Adjusted Appropriation Amount identified in Article I(A) herein or (b) the total of all amounts stated in the Notice(s) of Obligation evidencing that the Department has received and accepted the Grantee's Third Party Obligation(s), as defined in subparagraph iii of this Article II(A); and

iii. The Grantee's expenditures were made pursuant to the State Procurement Code and execution of binding written obligations or purchase orders with third party contractors or vendors for the provision of services, including professional services, or the purchase of tangible personal property and real property for the Project, hereinafter referred to as "Third Party Obligations"; and

iv. The Grantee's submittal of timely Requests for Payment in accordance with the procedures set forth in Article IX of this Agreement; and

v. In the event that capital assets acquired with Project funds are to be sold, leased, or licensed to or operated by a private entity, the sale, lease, license, or operating agreement:

a. must be approved by the applicable oversight entity (if any) in accordance with law; or

b. if no oversight entity is required to approve the transaction, the Department must approve the transaction as complying with law.

Prior to the sale, lease, license, or operating agreement being approved pursuant to Articles II(A)(v)(a) and II(A)(v)(b) herein, the Department may, in its sole and absolute discretion and unless inconsistent with State Board of Finance imposed conditions, reimburse the Grantee for necessary expenditures incurred to develop the Project sufficiently to make the sale, lease, license, or operating agreement commercially feasible, such as plan and design expenditures; and

vi. The Grantee shall request approval of its obligation(s) by submitting a Notice of Obligation form as provided by the Department. The Grantee's submission of documentation of all Third Party Obligations and amendments thereto (including terminations) to the Department and the Department's issuance and the Grantee's receiving of a Notice of Obligation for a particular amount in accordance with the terms of this Agreement shall be governed by the following:

a. The Grantee shall submit to the Department one copy of all Third Party Obligations and amendments thereto (including terminations) as soon as possible after execution by the Third Party **but prior to execution by the Grantee.**

b. Grantee acknowledges and agrees that if it chooses to enter into a Third Party Obligation prior to receiving a Notice of Obligation that covers the expenditure, it is solely responsible for such obligations.

c. The Department may, in its sole and absolute discretion, issue to Grantee a Notice of Obligation for the particular amount of that Third Party Obligation that only obligates the Department to reimburse Grantee's expenditures made on or before the Reversion Date or an Early Termination Date.

d. The date the Department signs the Notice of Obligation is the date that the Department's Notice of Obligation is effective. After that date, the Grantee is authorized to budget the particular amount set forth in the Notice of Obligation, execute the Third Party Obligation and request the Third Party to begin work. Payment for any work performed or goods received prior to the effective date of the Notice of Obligation is wholly and solely the obligation of the Grantee.

B. The Grantee shall implement, in all respects, the Project. The Grantee shall provide all necessary qualified personnel, material, and facilities to implement the Project. The Grantee shall finance its share (if any) of the costs of the Project, including all Project overruns.

C. Project funds shall not be used for purposes other than those specified in the Project Description.

D. Unless specifically allowed by law, Project funds cannot be used to reimburse Grantee for indirect Project costs.

---

[1]The AIPP amount is "an amount of money equal to one percent or two hundred thousand dollars ($200,000), whichever is less, of the amount of money appropriated for new construction or any major renovation exceeding one hundred thousand dollars ($100,000)." Section 13-4A-4 NMSA 1978.

[2]"Reimburse" as used throughout this Agreement includes Department payments to the Grantee for invoices received, but not yet paid, by the Grantee from a third party contractor or vendor, if the invoices comply with the provisions of this Agreement and are a valid liability of the Grantee.

ARTICLE III. NOTICE PROVISIONS AND GRANTEE AND DEPARTMENT DESIGNATED REPRESENTATIVES

Whenever written notices, including written decisions, are to be given or received, related to this Agreement, the following provisions shall apply.

The Grantee designates the person(s) listed below, or their successor, as their official representative(s) concerning all matters related to this Agreement:

Grantee: CITY OF SANTA FE
Name: Alan Webber
Title: Mayor
Address: PO Box 909, Santa Fe, NM 87504
Email: mayor@santafenm.gov
Telephone: 505-955-6590

The Grantee designates the person(s) listed below, or their successor, as their Fiscal Officer or Fiscal Agent concerning all matters related to this Agreement:

Grantee: CITY OF SANTA FE
Name: Emily K. Oster
Title: Finance Director
Address: PO Box 909, Santa Fe, NM 87504
Email: ekoster@santafenm.gov
Telephone: 505-629-3411

The Department designates the persons listed below, or their successors, as the Points of Contact for matters related to this Agreement.

Department: DFA/Local Government Division
Name: Daniel Catanach
Title: Program Manager
Address: Bataan Memorial Bldg. Rm 202, Santa Fe, NM 87501
Email: danieln.catanach@dfa.nm.gov
Telephone: 505-231-6090

The Grantee and the Department agree that either party shall send all notices, including written decisions, related to this Agreement to the above named persons by email or regular mail. In the case of mailings, notices shall be deemed to have been given and received upon the date of the receiving party's actual receipt or five calendar days after mailing, whichever shall first occur. In the case of email transmissions, the notice shall be deemed to have been given and received on the date reflected on the delivery receipt of email.

ARTICLE IV. REVERSION DATE, TERM, DEADLINE TO EXPEND FUNDS

A. As referenced in Article I(A), the applicable law establishes a date by which Project funds must be expended by Grantee, which is referred to throughout the remainder of this Agreement as the "Reversion Date." Upon being duly executed by both parties, this Agreement shall be effective as of the date of execution by the Department. It shall terminate on **June 30, 2028** the Reversion Date unless Terminated Before Reversion Date ("Early Termination") pursuant to Article V herein.
B. The Project's funds must be expended on or before the Reversion Date and, if applicable, Early Termination Date of this Agreement. For purposes of this Agreement, it is not sufficient for the Grantee to encumber the Project funds on its books on or before the Project's Reversion Date or Early Termination Date. Funds are expended and an expenditure has occurred as of the date that a particular quantity of goods are delivered to and received by the Grantee or title to the goods is transferred to the Grantee and/or as of the date particular services are rendered for the Grantee. Funds are ***not*** expended and an expenditure has ***not*** occurred as of the date they are encumbered by the Grantee pursuant to a contract or purchase order with a third party.

ARTICLE V. EARLY TERMINATION

A. Early Termination Before Reversion Date Due to Completion of the Project or Complete Expenditure of the Adjusted Appropriation or Violation of this Agreement

Early Termination includes:

i. Termination due to completion of the Project before the Reversion Date; or
ii. Termination due to complete expenditure of the Adjusted Appropriation Amount before the Reversion Date; or
iii. Termination for violation of the terms of this Agreement; or
iv. Termination for suspected mishandling of public funds, including but not limited to, fraud, waste, abuse, and conflicts of interest.

Either the Department or the Grantee may early terminate this Agreement prior to the Reversion Date by providing the other party with a minimum of fifteen (15) days' advance, written notice of early termination. Grantee hereby waives any rights to assert an impairment of contract claim against the Department or the State of New Mexico in the event of Early Termination of this Agreement by the Department pursuant to Article V(A).

B. Early Termination Before Reversion Date Due to Non-appropriation

The terms of this Agreement are expressly made contingent upon sufficient appropriations and authorization being made by the Legislature of New Mexico for the performance of this Agreement. Throughout this Agreement the term "non-appropriate" or "non-appropriation" includes the following actions by the New Mexico Legislature: deauthorization, reauthorization or revocation of a prior authorization. The Legislature may choose to non-appropriate the Appropriation referred to in Article I and, if that occurs, the Department shall early terminate this Agreement for non-appropriation by giving the Grantee written notice of such termination, and such termination shall be effective as of the effective date of the law making the non-appropriation. The Department's decision as to whether sufficient appropriations or authorizations are available shall be accepted by the Grantee and shall be final. Grantee hereby waives any rights to assert an impairment of contract claim against the Department or the State of New Mexico in the event of Early Termination of this Agreement by the Department pursuant to Article V(B).

C. Limitation on Department's Obligation to Make Grant Disbursements to Grantee in the Event of Early Termination

In the event of Early Termination of this Agreement by either party, the Department's sole and absolute obligation to reimburse the Grantee is expressly conditioned upon the limitations set forth Article II.

ARTICLE VI. SUSPENSION OF NEW OR FURTHER OBLIGATIONS

A. The Department may choose, in its sole and absolute discretion, to provide written notice to the Grantee to suspend entering into new and further obligations. Upon the receipt of such written notice by the Grantee:

i. The Grantee shall immediately suspend entering into new or further written obligations with third parties; and
ii. The Department will suspend the issuance of any new or further Notice of Obligation under this Agreement; and
iii. The Department may direct the Grantee to implement a corrective action plan in accordance with Article VI(D) herein.

B. In the event of Suspension of this Agreement, the Department's sole and absolute obligation to reimburse the Grantee is expressly conditioned upon the limitations set forth in Article II herein.

C. A suspension of new or further obligations under this Agreement shall remain in effect unless or until the date the Grantee receives written notice given by the Department informing the Grantee that the Suspension has been lifted or that the Agreement has been Early Terminated in accordance with Article V herein. If the Suspension is lifted, the Department will consider further requests for Notice of Obligation.

D. Corrective Action Plan in the Event of Suspension

In the event that the Department chooses, in its sole and absolute discretion to direct the Grantee to suspend entering into new or further written obligations with third parties pursuant to Article VI(A), the Department may, but is not obligated to, require the Grantee to develop and implement a written corrective action plan to remedy the grounds for the Suspension. Such corrective action plan must be approved by the Department and be signed by the Grantee. Failure to sign a corrective action plan or meet the terms and deadlines set forth in the signed corrective action plan, is hereby deemed a violation of the terms of this Agreement for purposes of Early Termination, Article V(A)(iii). The corrective action plan is in addition to, and not in lieu of, any other equitable or legal remedy, including but not limited to Early Termination.

ARTICLE VII. AMENDMENT

This Agreement shall not be altered, changed, or amended except by instrument in writing duly executed by both the parties hereto.

ARTICLE VIII. REPORTS

A. Database Reporting

The Grantee shall report quarterly Project activity by entering such Project information as the Department and the Department of Finance and Administration may require, such information entered directly into a database maintained by the Department of Finance and Administration. Additionally, the Grantee shall certify on the Request for Payment form that updates have been maintained and are current in the database. The Grantee hereby acknowledges that failure to perform and/or certify updates into the database will delay or potentially jeopardize the reimbursement of funds. The Department shall give Grantee a minimum of thirty (30) days' advance written notice of any changes to the information the Grantee is required to report.

Quarterly reports are due on the last day of each quarter. Quarter end reporting periods are September 30th, December 31st, March 31st, and June 30th.

B. Requests for Additional Information/Project Inspection

During the term of this Agreement and during the period of time during which the Grantee must maintain records pursuant to Article VIII, the Department may:

i. request such additional information regarding the Project as it deems necessary; and
ii. conduct, at reasonable times and upon reasonable notice, onsite inspections of the Project.

Grantee shall respond to such requests for additional information within a reasonable period of time, as established by the Department.

ARTICLE IX. REQUEST FOR PAYMENT PROCEDURES AND DEADLINES

A. The Grantee shall request payment by submitting a Request for Payment, in the form provided by the Department. Payment requests are subject to the following procedures:
   i. The Grantee must submit a Request for Payment; and
   ii. Each Request for Payment must contain proof of payment by the Grantee or liabilities incurred by the Grantee showing that the expenditures are valid or are liabilities incurred by the Grantee in the form of actual unpaid invoices received by the Grantee for services rendered by a third party or items of tangible personal property received by the Grantee for the implementation of the Project; provided, however, that the Grantee may be reimbursed for unpaid liabilities only if the Department, in its sole and absolute discretion, agrees to do so and in accordance with any special conditions imposed by the Department.
   iii. In cases where the Grantee is submitting a Request for Payment to the Department based upon invoices received, but not yet paid, by the Grantee from a third party contractor or vendor, if the invoices comply with the provisions of this Agreement and are a valid liability of the Grantee, the Grantee shall make payment to those contractors or vendors within five (5) business days from the date of receiving reimbursement from the Department or such shorter period of time as the Department may prescribe in writing. The Grantee is required to certify to the Department proof of payment to the third party contractor or vendor within ten (10) business days from the date of receiving reimbursement from the Department.

B. The Grantee must obligate 5% of the Adjusted Appropriation Amount within six months of execution of the grant agreement and must have expended no less than 85% of the Adjusted Appropriation Amount six months prior to the reversion date.

C. Deadlines

Requests for Payments shall be submitted by Grantee to the Department on the earlier of:
   i. Immediately as they are received by the Grantee but at a minimum thirty (30) days from when the expenditure was incurred or liability of the Grantee was approved as evidenced by an unpaid invoice received by the Grantee from a third party contractor or vendor; or
   ii. Twenty (20) days from date of Early Termination; or

iii. Twenty (20) days from the Reversion Date.

D. The Grantee's failure to abide by the requirements set forth in Article II and Article IX herein will result in the denial of its Request for Payment or will delay the processing of Requests for Payment. The Department has the right to reject a payment request for the Project unless and until it is satisfied that the expenditures in the Request for Payment are for permissible purposes within the meaning of the Project Description and that the expenditures and the Grantee are otherwise in compliance with this Agreement, including but not limited to, compliance with the reporting requirements and the requirements set forth in Article II herein to provide Third Party Obligations and the Deadlines set forth in Article IX herein. The Department's ability to reject any Request for Payment is in addition to, and not in lieu of, any other legal or equitable remedy available to the Department due to Grantee's violation of this Agreement.

ARTICLE X. PROJECT CONDITIONS AND RESTRICTIONS; REPRESENTATIONS AND WARRANTIES

A. The following general conditions and restrictions are applicable to the Project:

i. The Project's funds must be spent in accordance with all applicable state laws, regulations, policies, and guidelines, including, but not limited to, the State Procurement Code (or local procurement ordinance, where applicable).

ii. The Project must be implemented in accordance with the New Mexico Public Works Minimum Wage Act, Section 13-4-10 through 13-4-17 NMSA 1978, as applicable. Every contract or project in excess of sixty thousand dollars ($60,000) that the Grantee is a party to for construction, alteration, demolition or repair or any combination of these, including painting and decorating, of public buildings, public works or public roads and that requires or involves the employment of mechanics, laborers or both shall contain a provision stating the minimum wages and fringe benefits to be paid to various classes of laborers and mechanics, shall be based upon the wages and benefits that will be determined by the New Mexico Department of Workforce Solutions to be prevailing for the corresponding classes of laborers and mechanics employed on contract work of a similar nature in the locality. Further, every contract or project shall contain a stipulation that the contractor, subcontractor, employer or a person acting as a contractor shall pay all mechanics and laborers employed on the site of the project, unconditionally and not less often than once a week and without subsequent unlawful deduction or rebate on any account, the full amounts accrued at time of payment computed at wage rates and fringe benefit rates not less than those determined pursuant to Section 13-4-11 (B) NMSA 1978 to be the prevailing wage rates and prevailing fringe benefit rates issued for the project.

iii. The Project may only benefit private entities in accordance with applicable law, including, but not limited to, Article IX, Section 14 of the Constitution of the State of New Mexico, the "Anti-Donation Clause."

iv. The Grantee shall not for a period of 10 years from the date of this agreement convert any property acquired, built, renovated, repaired, designed or developed with the Project's funds to uses other than those specified in the Project Description without the Department's and the Board of Finance's express, advance, written approval, which may include a requirement to reimburse the State for the cost of the project, transfer proceeds from the disposition of property to the State, or otherwise provide consideration to the State.

v. The Grantee shall comply with all federal and state laws, rules and regulations pertaining to equal employment opportunity. In accordance with all such laws, rules and regulations the Grantee agrees to assure that no person shall, on the grounds of race, color, national origin, sex, sexual preference, age or handicap, be excluded from employment with Grantee, be excluded from participation in the Project, be denied benefits or otherwise be subject to discrimination under, any activity performed under this Agreement. If Grantee is found to be not in compliance with these requirements during the life of this Agreement, Grantee agrees to take appropriate steps to correct any deficiencies. The Grantee's failure to implement such appropriate steps within a reasonable time constitutes grounds for terminating this Agreement.

B. The Grantee hereby represents and warrants the following:

i. The Grantee has the legal authority to receive and expend the Project's funds.

ii. This Agreement has been duly authorized by the Grantee, the person executing this Agreement has authority to do so, and, once executed by the Grantee, this Agreement shall constitute a binding obligation of the Grantee, enforceable according to its terms.

iii. This Agreement and the Grantee's obligations hereunder do not conflict with any law or ordinance or resolution applicable to the Grantee, the Grantee's charter (if applicable), or any judgment or decree to which the Grantee is subject.

iv. The Grantee has independently confirmed that the Project Description, including, but not limited to, the amount and Reversion Date, is consistent with the underlying appropriation in law.

v. The Grantee's governing body has duly adopted or passed as an official act a resolution, motion, or similar action authorizing the person identified as the official representative of the Grantee to sign the Agreement and to sign Requests for Payment.

vi. The Grantee shall abide by New Mexico laws regarding conflicts of interest, governmental conduct and whistleblower

protection. The Grantee specifically agrees that no officer or employee of the local jurisdiction or its designees or agents, no member of the governing body, and no other public official of the locality who exercises any function or responsibility with respect to this Grant, during their tenure or for one year thereafter, shall have any interest, direct or indirect, in any contract or subcontract, or the proceeds thereof, for work to be performed or goods to be received, pursuant to this Grant. Further, Grantee shall require all of its contractors to incorporate in all subcontracts the language set forth in this paragraph prohibiting conflicts of interest.

vii. No funds have been paid or will be paid, by or on behalf of the Grantee, to any person for influencing or attempting to influence an officer or employee of this or any agency or body in connection with the awarding of any Third Party Obligation and that the Grantee shall require certifying language prohibiting lobbying to be included in the award documents for all subawards, including subcontracts, loans and cooperative agreements. All subrecipients shall be required to certify accordingly.

ARTICLE XI. STRICT ACCOUNTABILITY OF RECEIPTS AND DISBURSEMENTS; PROJECT RECORDS

A. The Grantee shall be strictly accountable for receipts and disbursements relating to the Project's funds. The Grantee shall follow generally accepted accounting principles, and, if feasible, maintain a separate bank account or fund with a separate organizational code, for the funds to assure separate budgeting and accounting of the funds.

B. For a period of six (6) years following the Project's completion, the Grantee shall maintain all Project related records, including, but not limited to, all financial records, requests for proposals, invitations to bid, selection and award criteria, contracts and subcontracts, advertisements, minutes of pertinent meetings, as well as records sufficient to fully account for the amount and disposition of the total funds from all sources budgeted for the Project, the purpose for which such funds were used, and such other records as the Department shall prescribe.

C. The Grantee shall make all Project records available to the Department, the Department of Finance and Administration, and the New Mexico State Auditor upon request. With respect to the funds that are the subject of this Agreement, if the State Auditor or the Department of Finance and Administration finds that any or all of these funds were improperly expended, the Grantee may be required to reimburse to the State of New Mexico, to the originating fund, any and all amounts found to be improperly expended.

ARTICLE XII. IMPROPERLY REIMBURSED FUNDS

If the Department determines that part or all of the Appropriation Amount was improperly reimbursed to Grantee, including but not limited to, Project funds reimbursed to Grantee based upon fraud, mismanagement, misrepresentation, misuse, violation of law by the Grantee, or violation of this Agreement, the Grantee shall return such funds to the Department for disposition in accordance with law.

ARTICLE XIII. LIABILITY

Neither party shall be responsible for liability incurred as a result of the other party's acts or omissions in connection with this Agreement. Any liability incurred in connection with this Agreement is subject to immunities and limitations of the New Mexico Tort Claims Act.

ARTICLE XIV. SCOPE OF AGREEMENT

This Agreement constitutes the entire and exclusive agreement between the Grantee and Department concerning the subject matter hereof. The Agreement supersedes any and all prior or contemporaneous agreements, understandings, discussions, communications, and representations, written or verbal.

ARTICLE XV. REQUIRED NON-APPROPRIATIONS CLAUSE IN CONTRACTS FUNDED IN WHOLE OR PART BY FUNDS MADE AVAILABLE UNDER THIS AGREEMENT

The Grantee acknowledges, warrants, and agrees that Grantee shall include a "non-appropriations" clause in all contracts between it and other parties that are (i) funded in whole or part by funds made available under this Agreement and (ii) entered into after the effective date of this Agreement that states:

"The terms of this Agreement are contingent upon sufficient appropriations and authorization being made by the Legislature of New Mexico for the performance of this Agreement. If sufficient appropriations and authorization are not made by the Legislature, the **CITY OF SANTA FE** may immediately terminate this Agreement by giving Contractor written notice of such termination. The **CITY OF SANTA FE**'s decision as to whether sufficient appropriations are available shall be accepted by the Contractor and shall be final. Contractor hereby waives any rights to assert an impairment of contract claim against the **CITY OF SANTA FE** or the

Department of Finance and Administration, Local Government Division (DFA/LGD) or the State of New Mexico in the event of immediate or Early Termination of this Agreement by the **CITY OF SANTA FE** or the Department"

ARTICLE XVI. REQUIRED TERMINATION CLAUSE IN CONTRACTS FUNDED IN WHOLE OR PART BY FUNDS MADE AVAILABLE UNDER THIS AGREEMENT

Grantee acknowledges, warrants, and agrees that Grantee shall include the following termination clause in all contracts that are (i) funded in whole or part by funds made available under this Agreement and (ii) entered into after the effective date of this Agreement:

"This contract is funded in whole or in part by funds made available under a DFA/LGD Grant Agreement. Should the DFA/LGD early terminate the grant agreement, the CITY OF SANTA FE may early terminate this contract by providing Contractor written notice of such termination. In the event of termination pursuant to this paragraph, the CITY OF SANTA FE only liability shall be to pay Contractor for acceptable goods delivered and services rendered before the termination date."

Grantee hereby waives any rights to assert an impairment of contract claim against the Department or the State of New Mexico in the event of Early Termination of this Agreement by the Department.

ARTICLE XVII. COMPLIANCE WITH UNIFORM FUNDING CRITERIA.

A. Throughout the term of this Agreement, Grantee shall:
    1. submit all reports of annual audits and agreed upon procedures required by Section 12-6-3(A)-(B) NMSA 1978 by the due dates established in 2.2.2 NMAC, reports of which must be a public record pursuant to Section 12-6-5(A) NMSA 1978 within forty-five days of delivery to the State Auditor;
    2. have a duly adopted budget for the current fiscal year approved by its budgetary oversight agency (if any);
    3. timely submit all required financial reports to its budgetary oversight agency (if any); and
    4. have adequate accounting methods and procedures to expend grant funds in accordance with applicable law and account for and safeguard grant funds and assets acquired by grant funds.

B. In the event Grantee fails to comply with the requirements of Paragraph A of this Article XVII, the Department may take one or more of the following actions:
    1. suspend new or further obligations pursuant to Article VI(A) of this Agreement;
    2. require the Grantee to develop and implement a written corrective action plan pursuant to Article VI(D) of this Agreement to remedy the non-compliance;
    3. impose special grant conditions to address the non-compliance by giving the Grantee notice of such special conditions in accordance with Article III of this Agreement; the special conditions shall be binding and effective on the date that notice is deemed to have been given pursuant to Article III; or
    4. terminate this Agreement pursuant to Article V(A) of this Agreement.

ARTICLE XVIII. SEVERANCE TAX BOND AND GENERAL OBLIGATION BOND PROJECT CLAUSES

A. Grantee acknowledges and agrees that the underlying appropriation for the Project is a severance tax bond or general obligation bond appropriation, and that the associated bond proceeds are administered by the New Mexico State Board of Finance (SBOF), an entity separate and distinct from the Department. Grantee acknowledges and agrees that (i) it is Grantee's sole and absolute responsibility to determine through SBOF staff what (if any) conditions are currently imposed on the Project; (ii) the Department's failure to inform Grantee of a SBOF imposed condition does not affect the validity or enforceability of the condition; (iii) the SBOF may in the future impose further or different conditions upon the Project; (iv) all SBOF conditions are effective without amendment of this Agreement; (v) all applicable SBOF conditions must be satisfied before the SBOF will release to the Department funds subject to the condition(s); and (vi) the Department's obligation to reimburse Grantee from the Project is contingent upon the then current SBOF conditions being satisfied.

B. Grantee acknowledges and agrees that the SBOF may in its sole and absolute discretion remove a project's assigned bond proceeds if the project doesn't proceed sufficiently. Entities must comply with the requirement to encumber five percent (5%) of Project funds within six months of bond issuance as certified by the grantee in the Bond Questionnaire and Certification documents submitted to the SBOF. Failure to comply may result in the bond proceeds reassignment to a new ready project. If this should occur this grant agreement will be suspended until the entity has demonstrated readiness as determined by the SBOF and the Department.

C. Grantee acknowledges and agrees that this Agreement is subject to the SBOF's Bond Project Disbursements rule, NMAC 2.61.6, as may be amended or re-codified. The rule provides definitions and interpretations of grant language for the purpose of determining whether a particular activity is allowable under the authorizing language of the agreement.

[THIS SPACE LEFT BLANK INTENTIONALLY]

IN WITNESS WHEREOF, the parties have duly executed this Agreement as of the date of execution by the Department.

GRANTEE

_____
Entity Name

_____
Signature of Official with Authority to Bind Grantee

By: _____
(Print Name)

Its: _____
(Title)

_____
Date

DEPARTMENT OF FINANCE AND ADMINISTRATION
LOCAL GOVERNMENT DIVISION

_____
By:

Its: Cabinet Secretary or Designee

_____
Date

IN WITNESS WHEREOF, the parties have executed this Capital Appropriation Project as of the dates set forth below.

CITY OF SANTA FE:

SEE ABOVE

_____

ALAN WEBBER, MAYOR

ATTEST:

_____

GERALYN CARDENAS, INTERIM CITY CLERK

CITY ATTORNEY'S OFFICE:

Kevin L. Nault

Kevin L. Nault (Aug 9, 2024 15:47 MDT)

ASSISTANT CITY ATTORNEY

FINANCE DIRECTOR:

Emily K. Oster

EMILY OSTER

STATE OF NEW MEXICO
GRANT PROJECT
Request for Payment Form
Exhibit 1

I. Grantee Information

(Make sure information is complete & accurate)

A. Grantee: _____

B. Address: _____

(Complete Mailing, including Suite, if applicable)

_____

City, State, Zip

C. Contact Name/Phone #: _____

D. Grant No: _____

E. Project Title: _____

F. Grant Expiration Date: _____

II. Payment Computation

A. Payment Request No. _____

B. Grant Amount: _____

C. AIPP Amount *(If Applicable)* : _____

D. Funds Requested to Date: _____

E. Amount Requested this Payment: _____

F. Reversion Amount (I*f Applicable*): _____

G. Grant Balance: _____

H. Final Request for Payment (*if Applicable*)

III. Fiscal Year : _____

(The State of NM Fiscal Year is July 1, 20XX through June 30, 20XX of the following year)

IV. ☐ Reporting Certification:

I hereby certify to the best of my knowledge and belief, that reporting is up to date; to include the accuracy of expenditures and grant balance, project status, project phase, achievements and milestones; and in compliance with the Grant Agreement.

V. ☐ Compliance Certification:

Under penalty of law, I hereby certify to the best of my knowledge and belief, the above information is correct; expenditures are properly documented, and are valid expenditures or actual receipts; and that the grant activity is in full compliance with Article IX, Sec. 14 of the New Mexico Constitution known as the "anti donation" clause.

Grantee Fiscal Officer
or **Fiscal Agent** (*if applicable*)

Grantee Representative

Printed Name

Printed Name

Date: _____

Date: _____

(State Agency Use Only)

Vendor Code: _____ **Fund No.:** _____ **PO #** _____ **Loc No.:** _____

I certify that the State Agency financial and vendor file information agree with the above submitted information.

Division Fiscal Officer Date

Division Project Manager Date

NOTICE OF OBLIGATION TO REIMBURSE GRANTEE
EXHIBIT 2

Notice of Obligation to Reimburse Grantee # _____

DATE: _____

TO: Department Representative: _____, _____

FROM: Grantee Entity: _____

Grantee Official Representative: _____

SUBJECT: Notice of Obligation to Reimburse Grantee

Grant Number: _____

Grant Termination Date: _____

As the designated representative of the Department for Grant Agreement number _____ entered into between Grantee and the Department, I certify that the Grantee has submitted to the Department the following third party obligation executed, in writing, by the third party's authorized representative:

Vendor or Contractor: _____

Third Party Obligation Amount: _____

Vendor or Contractor: _____

Third Party Obligation Amount: _____

I certify that the State is issuing this Notice of Obligation to Reimburse Grantee for permissible purposes within the scope of the project description, subject to all the terms and conditions of the above referenced Grant Agreement.

Grant Amount (Minus AIPP if applicable): _____

The Amount of this Notice of Obligation: _____

The Total Amount of all Previously Issued Notices of Obligation: _____

The Total Amount of all Notices of Obligation to Date: _____

Note: Contract amounts may exceed the total grant amount, but the invoices paid by the grant will not exceed the grant amount.

Department Rep. Approver: _____

Title: _____

Signature: _____

Date: _____

1 Administrative and/or Indirect Cost – generally, the legislation authorizing the issuance of bonds prohibits the use of its proceeds for indirect expenses (e.g. penalty fees or damages other than pay for work performed, attorney fees, and administrative fees). Such use of bond proceeds shall not be allowed unless specifically authorized by statute.

Log # *{Finance use only}*:	
Journal # *{Finance use only}*:	

City of Santa Fe, New Mexico
BUDGET AMENDMENT RESOLUTION (BAR)

DEPARTMENT / DIVISION NAME	DATE
Public Works / Parks and Trails CIP	8/15/2024

ITEM DESCRIPTION	ORG	OBJECT	PROJECT	INCREASE	DECREASE
EXPENDITURES				*{enter as positive #}*	*{enter as negative #}*
WIP Construction - Ped Bridge SF River/Shelby St.	3559980	572970	PWD2535518	240,000	
REVENUES				*{enter as negative #}*	*{enter as positive #}*
DFA - 24-I3147 Ped Bridge SF River/Shelby St.	3559980	490210	PWD2535518	(240,000)	
				$ -	$ -

JUSTIFICATION: *(use additional page if needed)*
--Attach supporting documentation/memo

Agreement with NM DFA to plan, design, demolisth, and construct a pedestrian bridge across the Santa Fe River at Shelby Street in the amount of $240,000 (24-I3147 expires 06/30/28)

{Complete section below if BAR results in a net change to ANY Fund}	
Fund(s) Affected	Fund Balance Increase/(Decrease)
TOTAL:	0

Halona Crowe	8/15/2024	*{Use this form for Finance Committee/ City Council agenda items ONLY}*	Andy Hopkins	Oct 30, 2024
Prepared By *{print name}*	Date	**CITY COUNCIL APPROVAL**	Budget Officer	Date
Melissa McDonald	Oct 23, 2024	*City Council Approval Date*		
Division Director Signature	Date		Finance Director *{≤ $5,000}*	Date
Regina Wheeler (Oct 29, 2024 14:06 MDT)	Oct 29, 2024	*Agenda Item #:*		
Department Director Signature	Date		City Manager *{≤ $60,000}*	Date

City of Santa Fe New Mexico

Finance Department

Project Ledger Request Form

Date of Request: 08/15/2024

Project Title: Pedestrian Bridge at SF River & Shelby St

Project Type: ☑ CIP ☑ Grant ☐ Internal Tracking

Project ID: PWD2535518
Grant ID: S2521
Approved By: MB 08/21/2024
Entered By: SS 08.20 (Finance Use Only)

Department: Public Works Project Manager: Scott Overlie Ext: 505-629-6194

Project Date Range: 08/15/2024 to 06/30/28 ☑ Create Fixed Asset

---

☐ Multi-Funding (complete all funding sources, should equal 100%)

Funding Source: NM DFA 24-I3147 % of Funding: 100%

MUNIS ORG: 3559980 MUNIS OBJ: 490210 Awarded Amount: $240,000

Funding Source: _____ % of Funding: _____

MUNIS ORG: _____ MUNIS OBJ: _____ Awarded Amount: _____

Expense String Phase:

A project must have at least one phase identified, this can be used as an additional level of tracking, for example, CIP - Design, Construction, etc. For Grants can be used as reimbursable types, such as transportation, salaries.

(You can create more than one phase and you can default MUNIS ORGs and OBJs, optional)

Phase: Construction MUNIS ORG: 3559980 MUNIS OBJ: 572970

Phase: _____ MUNIS ORG: _____ MUNIS OBJ: _____

Phase: _____ MUNIS ORG: _____ MUNIS OBJ: _____

Contract number: _____ Comments/Other: _____

GRANTS ONLY:

Grantor Name: DFA 24-I3147 Awarded Amount: $240,000.00

AR Charge Code: 3559980.490210 ☐ Grant funds multiple projects (Complete a form for each project)

Grantor Id: 700007 Federal CFDA (if applicable): _____

(If grants please provide all grant award documents with form) ☑ Attached Grant Documentation

Signature: Scott A.Overlie

Email: saoverlie@ci.santa-fe.nm.us

Signature:

Email: sxmoody@santafenm.gov

Signature: Scott Overlie
Scott Overlie (Oct 23, 2024 11:26 MDT)

Email: saoverlie@santafenm.gov

Signature: Sean Moody

Email: sxmoody@santafenm.gov

CITY OF SANTA FE

Date: **October 25, 2024**

To: **Governing Body**

Regina Wheeler (Oct 29, 2024 16:15 MDT)

Via: **Regina Wheeler, Public Works Department Director**
Melissa A. McDonald, Parks and Open Space Division Director MM
Sean Moody, Capital Projects Manager SM

From: **Scott A. Overlie, Parks and Open Space Project Manager** SAO

ACTION:

Request Approval of a New Mexico Department of Finance and Administration (DFA) General Fund 93100 Capital Appropriation Project Grant 24-I3142 in the Amount of $5,000,000 for Improvements at Fort Marcy Park with a Reversion Date of June 30, 2028. (Scott A. Overlie, Parks and Open Space Project Administrator; saoverlie@santafenm.gov)

1. Request Approval of a Budget Amendment Resolution to Allocate the DFA Funding in the Amount of $5,000,000 into FY25 Parks and Trails CIP Revenue and WIP Construction.

BACKGROUND AND SUMMARY:

This project was identified as a priority by Governor Lujan Grisham and included as a 2024 Legislative Capital Outlay appropriation (SB 275) to plan, design, construct, repair and equip Fort Marcy Park including accessibility improvements, walking and driving paths, restrooms, a concession stand, and grandstands. The improvements are necessary due to aging facilities and infrastructure, increased public use, and major events including Zozobra, the Santa Fe Wine and Chile Festival, and Santa Fe Fuego baseball games.

The grant will be used for planning, design and initial construction focused on:

a. Safety and ADA improvements
    i. Ensure full ADA access on sidewalks and stairs
    ii. Electrical system improvements to address failures.
b. Zozobra Field at Ft. Marcy improvements
    i. Renovate, repair and replace as necessary concession stand, bathrooms, ADA improvements for walkways and access to grandstands, lighting, new removable fence
c. Access improvements at east side arroyo crossing between the two fields
d. Additional cover on main arroyo for pedestrian access and egress during events

Construction costs and schedule will be determined once design phase is complete. Future construction will be phased to accommodate additional funding as it is secured.

The Funding source is: NEW MEXICO DEPARTMENT OF FINANCE AND ADMINISTRATION
Fund Name/Number: Parks/Trails CIP / 355
Munis Org Name/Number: Parks/Trails CIP / 3559980
Munis Expenditure Object Name/Number: WIP Construction / 572970
Munis Revenue Object Name/Number: NM DFA / 490210
Project Ledger Number: PWD2535527
If the project is grant funded? **List grant award number:** 24-I3142

Grant Manager/ Accounting Officer Approval: Matthew Bonifer Matthe wBonife Oct 29, 2024 16:44 MDT) **Date:** Oct 29, 2024

Comment/Exceptions: _____

Budget Officer Approval: Andy Hopkins **Date:** Oct 29, 2024

Comment/Exceptions: _____

CAPITAL ASSET (will this procurement result in a tangible item that costs more than $5,000?):
☑ Yes ☐ No

Repair or Replacement of Existing Equipment:
☑ Yes ☐ No
If yes -> ☑ Repair ☑ Replacement

Please explain: New, Repair or Replacement as Necessary

Capital Project (New and improvement projects that are going to cost $10,000 or more):
☑ **Yes** ☐ **No**

Anticipated length of project: To be determined once design phase is complete.

Asset Manager Approval: _____

Comment/Exceptions: _____

Department Approvals:
IT Components: ☐ Yes ☑ No
Vehicles: ☐ Yes ☑ No
Facilities, Furniture, Fixtures, Equipment: ☐ Yes ☑ No

Approval: _____ **Title:** _____ **Date:** _____

Approval: _____ **Title:** _____ **Date:** _____

Comment & Exceptions: _____

Department Contract Administrator Contact Info:
Scott A. Overlie, Project Administrator, Phone: (505) 231-6194 Email
Address: saoverlie@santafenm.gov

ATTACHMENTS:
Grant Agreement
Budget Amendment Resolution
Project Ledger ID Request

STATE OF NEW MEXICO
DEPARTMENT OF FINANCE AND ADMINISTRATION
GENERAL FUND 93100 CAPITAL APPROPRIATION PROJECT

THIS AGREEMENT is made and entered into as of the date it is executed, by and between the Department of Finance and Administration, hereinafter called the "Department" or abbreviation such as "DFA/LGD", and **CITY OF SANTA FE**, hereinafter called the "Grantee". This Agreement shall be effective as of the date it is executed by the Department.

RECITALS

WHEREAS, in the **Laws of 2024, Chapter 66, Section 28, Paragraph 500**, the Legislature made an appropriation to the Department, funds from which the Department is making available to the Grantee pursuant to this Agreement; and

WHEREAS, the Department is granting to Grantee, and the Grantee is accepting the grant of, funds from this appropriation, in accordance with the terms and conditions of this Agreement; and

WHEREAS, pursuant to Sections 9-6-5 and 9-6-5.1 NMSA 1978, the Secretary of the Department of Finance and Administration has the power and the authority to (i) maintain long-range estimates and plans for capital projects and develop standards for measuring the need for, and utility of, proposed projects; (ii) contract for, receive and utilize any grants or other financial assistance made available by the United States government or by any other source, public or private; (iii) provide planning and funding assistance to units of local government, council of government organizations, Indian tribal governments situated within New Mexico, and to nonprofit entities having for their purpose local, regional or community betterment; (iv) incident to any such programs, may enter into contracts and agreements with such units of local government, council of government organizations, Indian tribal governments, nonprofit entities and the federal government; and (v) delegate such authority to the Local Government Division as being necessary and appropriate to such delegation;

AGREEMENT

NOW, THEREFORE, in consideration of the mutual covenants and obligations contained herein, the parties hereby mutually agree as follows:

ARTICLE I. PROJECT DESCRIPTION, AMOUNT OF GRANT AND REVERSION DATE

A. The project that is the subject of this Agreement is described as follows:

24-I3142 $5,000,000.00 APPROPRIATION REVERSION DATE: June 30, 2028

Laws of 2024, Chapter 66, Section 28, Paragraph 500, Five Million Dollars And Zero Cents ($5,000,000.00), from the General Fund 93100 to plan, design, construct, repair, renovate and equip Fort Marcy park, including accessibility improvements, walking and driving paths, restrooms, a concession stand, grandstands, in Santa Fe in Santa Fe county;

The Grantee's total reimbursements shall not exceed Five Million Dollars And Zero Cents $5,000,000.00 (the "Appropriation Amount") minus the allocation for Art in Public Places ("AIPP amount")[1], if applicable, Fifty Thousand Dollars And Zero Cents $50,000.00, which equals Four Million Nine Hundred Fifty Thousand Dollars And Zero Cents $4,950,000.00 (the "Adjusted Appropriation Amount").

In the event of a conflict among the Appropriation Amount, the Reversion Date, as defined herein and/or the purpose of the Project, as set forth in this Agreement, and the corresponding appropriation language in the laws cited above in this Article I(A), the language of the laws cited herein shall control.

This project is referred to throughout the remainder of this Agreement as the "Project"; the information contained in Article I(A) is referred to collectively throughout the remainder of this Agreement as the "Project Description." [Optional Language if special conditions apply. Attachment A sets forth additional or more stringent requirements and conditions, which are incorporated by this reference as if set forth fully herein. If Optional Attachment A imposes more stringent requirements than any requirement set forth in this Agreement, the more stringent requirements of Attachment A shall prevail, in the event of irreconcilable conflict.] The Grantee shall reference the Project's number in all correspondence with and submissions to the Department concerning the Project, including, but not limited to, Requests for Payment and reports.

ARTICLE II. LIMITATION ON DEPARTMENT'S OBLIGATION TO MAKE GRANT DISBURSEMENT TO GRANTEE

A. Upon the Effective Date of this Agreement, for permissible purposes within the scope of the Project Description, the Grantee shall only be reimbursed monies for which the Department has issued and the Grantee has received a Notice of Department's Obligation to Reimburse Grantee (hereinafter referred to as "Notice of Obligation"). This Grant Agreement and the disbursement of any and all amounts of the above referenced Adjusted Appropriation Amount are expressly conditioned upon the following:

i. Irrespective of any Notice of Obligation, the Grantee's expenditures shall be made on or before the Reversion Date and, if applicable, an Early Termination Date (i.e., the goods have been delivered and accepted or the title to the goods has been transferred to the Grantee and/or the services have been rendered for the Grantee); and

ii. The total amount received by the Grantee shall not exceed the lesser of: (a) the Adjusted Appropriation Amount identified in Article I(A) herein or (b) the total of all amounts stated in the Notice(s) of Obligation evidencing that the Department has received and accepted the Grantee's Third Party Obligation(s), as defined in subparagraph iii of this Article II(A); and

iii. The Grantee's expenditures were made pursuant to the State Procurement Code and execution of binding written obligations or purchase orders with third party contractors or vendors for the provision of services, including professional services, or the purchase of tangible personal property and real property for the Project, hereinafter referred to as "Third Party Obligations"; and

iv. The Grantee's submittal of timely Requests for Payment in accordance with the procedures set forth in Article IX of this Agreement; and

v. In the event that capital assets acquired with Project funds are to be sold, leased, or licensed to or operated by a private entity, the sale, lease, license, or operating agreement:

a. must be approved by the applicable oversight entity (if any) in accordance with law; or

b. if no oversight entity is required to approve the transaction, the Department must approve the transaction as complying with law.

Prior to the sale, lease, license, or operating agreement being approved pursuant to Articles II(A)(v)(a) and II(A)(v)(b) herein, the Department may, in its sole and absolute discretion and unless inconsistent with State Board of Finance imposed conditions, reimburse the Grantee for necessary expenditures incurred to develop the Project sufficiently to make the sale, lease, license, or operating agreement commercially feasible, such as plan and design expenditures; and

vi. The Grantee shall request approval of its obligation(s) by submitting a Notice of Obligation form as provided by the Department. The Grantee's submission of documentation of all Third Party Obligations and amendments thereto (including terminations) to the Department and the Department's issuance and the Grantee's receiving of a Notice of Obligation for a particular amount in accordance with the terms of this Agreement shall be governed by the following:

a. The Grantee shall submit to the Department one copy of all Third Party Obligations and amendments thereto (including terminations) as soon as possible after execution by the Third Party **but prior to execution by the Grantee.**

b. Grantee acknowledges and agrees that if it chooses to enter into a Third Party Obligation prior to receiving a Notice of Obligation that covers the expenditure, it is solely responsible for such obligations.

c. The Department may, in its sole and absolute discretion, issue to Grantee a Notice of Obligation for the particular amount of that Third Party Obligation that only obligates the Department to reimburse Grantee's expenditures made on or before the Reversion Date or an Early Termination Date.

d. The date the Department signs the Notice of Obligation is the date that the Department's Notice of Obligation is effective. After that date, the Grantee is authorized to budget the particular amount set forth in the Notice of Obligation, execute the Third Party Obligation and request the Third Party to begin work. Payment for any work performed or goods received prior to the effective date of the Notice of Obligation is wholly and solely the obligation of the Grantee.

B. The Grantee shall implement, in all respects, the Project. The Grantee shall provide all necessary qualified personnel, material, and facilities to implement the Project. The Grantee shall finance its share (if any) of the costs of the Project, including all Project overruns.

C. Project funds shall not be used for purposes other than those specified in the Project Description.

D. Unless specifically allowed by law, Project funds cannot be used to reimburse Grantee for indirect Project costs.

---

[1]The AIPP amount is "an amount of money equal to one percent or two hundred thousand dollars ($200,000), whichever is less, of the amount of money appropriated for new construction or any major renovation exceeding one hundred thousand dollars ($100,000)." Section 13-4A-4 NMSA 1978.

[2]"Reimburse" as used throughout this Agreement includes Department payments to the Grantee for invoices received, but not yet paid, by the Grantee from a third party contractor or vendor, if the invoices comply with the provisions of this Agreement and are a valid liability of the Grantee.

ARTICLE III. NOTICE PROVISIONS AND GRANTEE AND DEPARTMENT DESIGNATED REPRESENTATIVES

Whenever written notices, including written decisions, are to be given or received, related to this Agreement, the following provisions shall apply.

The Grantee designates the person(s) listed below, or their successor, as their official representative(s) concerning all matters related to this Agreement:

Grantee: CITY OF SANTA FE
Name: Alan Webber
Title: Mayor
Address: PO Box 909, Santa Fe, NM 87504
Email: mayor@santafenm.gov
Telephone: 505-955-6590

The Grantee designates the person(s) listed below, or their successor, as their Fiscal Officer or Fiscal Agent concerning all matters related to this Agreement:

Grantee: CITY OF SANTA FE
Name: Emily K. Oster
Title: Finance Director
Address: PO Box 909, Santa Fe, NM 87504
Email: ekoster@santafenm.gov
Telephone: 505-629-3411

The Department designates the persons listed below, or their successors, as the Points of Contact for matters related to this Agreement.

Department: DFA/Local Government Division
Name: Daniel Catanach
Title: Program Manager
Address: Bataan Memorial Bldg. Rm 202, Santa Fe, NM 87501
Email: danieln.catanach@dfa.nm.gov
Telephone: 505-231-6090

The Grantee and the Department agree that either party shall send all notices, including written decisions, related to this Agreement to the above named persons by email or regular mail. In the case of mailings, notices shall be deemed to have been given and received upon the date of the receiving party's actual receipt or five calendar days after mailing, whichever shall first occur. In the case of email transmissions, the notice shall be deemed to have been given and received on the date reflected on the delivery receipt of email.

ARTICLE IV. REVERSION DATE, TERM, DEADLINE TO EXPEND FUNDS

A. As referenced in Article I(A), the applicable law establishes a date by which Project funds must be expended by Grantee, which is referred to throughout the remainder of this Agreement as the "Reversion Date." Upon being duly executed by both parties, this Agreement shall be effective as of the date of execution by the Department. It shall terminate on **June 30, 2028** the Reversion Date unless Terminated Before Reversion Date ("Early Termination") pursuant to Article V herein.
B. The Project's funds must be expended on or before the Reversion Date and, if applicable, Early Termination Date of this Agreement. For purposes of this Agreement, it is not sufficient for the Grantee to encumber the Project funds on its books on or before the Project's Reversion Date or Early Termination Date. Funds are expended and an expenditure has occurred as of the date that a particular quantity of goods are delivered to and received by the Grantee or title to the goods is transferred to the Grantee and/or as of the date particular services are rendered for the Grantee. Funds are ***not*** expended and an expenditure has ***not*** occurred as of the date they are encumbered by the Grantee pursuant to a contract or purchase order with a third party.

ARTICLE V. EARLY TERMINATION

A. Early Termination Before Reversion Date Due to Completion of the Project or Complete Expenditure of the Adjusted Appropriation or Violation of this Agreement

Early Termination includes:

i. Termination due to completion of the Project before the Reversion Date; or
ii. Termination due to complete expenditure of the Adjusted Appropriation Amount before the Reversion Date; or
iii. Termination for violation of the terms of this Agreement; or
iv. Termination for suspected mishandling of public funds, including but not limited to, fraud, waste, abuse, and conflicts of interest.

Either the Department or the Grantee may early terminate this Agreement prior to the Reversion Date by providing the other party with a minimum of fifteen (15) days' advance, written notice of early termination. Grantee hereby waives any rights to assert an impairment of contract claim against the Department or the State of New Mexico in the event of Early Termination of this Agreement by the Department pursuant to Article V(A).

B. Early Termination Before Reversion Date Due to Non-appropriation

The terms of this Agreement are expressly made contingent upon sufficient appropriations and authorization being made by the Legislature of New Mexico for the performance of this Agreement. Throughout this Agreement the term "non-appropriate" or "non-appropriation" includes the following actions by the New Mexico Legislature: deauthorization, reauthorization or revocation of a prior authorization. The Legislature may choose to non-appropriate the Appropriation referred to in Article I and, if that occurs, the Department shall early terminate this Agreement for non-appropriation by giving the Grantee written notice of such termination, and such termination shall be effective as of the effective date of the law making the non-appropriation. The Department's decision as to whether sufficient appropriations or authorizations are available shall be accepted by the Grantee and shall be final. Grantee hereby waives any rights to assert an impairment of contract claim against the Department or the State of New Mexico in the event of Early Termination of this Agreement by the Department pursuant to Article V(B).

C. Limitation on Department's Obligation to Make Grant Disbursements to Grantee in the Event of Early Termination

In the event of Early Termination of this Agreement by either party, the Department's sole and absolute obligation to reimburse the Grantee is expressly conditioned upon the limitations set forth Article II.

ARTICLE VI. SUSPENSION OF NEW OR FURTHER OBLIGATIONS

A. The Department may choose, in its sole and absolute discretion, to provide written notice to the Grantee to suspend entering into new and further obligations. Upon the receipt of such written notice by the Grantee:

i. The Grantee shall immediately suspend entering into new or further written obligations with third parties; and
ii. The Department will suspend the issuance of any new or further Notice of Obligation under this Agreement; and
iii. The Department may direct the Grantee to implement a corrective action plan in accordance with Article VI(D) herein.

B. In the event of Suspension of this Agreement, the Department's sole and absolute obligation to reimburse the Grantee is expressly conditioned upon the limitations set forth in Article II herein.

C. A suspension of new or further obligations under this Agreement shall remain in effect unless or until the date the Grantee receives written notice given by the Department informing the Grantee that the Suspension has been lifted or that the Agreement has been Early Terminated in accordance with Article V herein. If the Suspension is lifted, the Department will consider further requests for Notice of Obligation.

D. Corrective Action Plan in the Event of Suspension

In the event that the Department chooses, in its sole and absolute discretion to direct the Grantee to suspend entering into new or further written obligations with third parties pursuant to Article VI(A), the Department may, but is not obligated to, require the Grantee to develop and implement a written corrective action plan to remedy the grounds for the Suspension. Such corrective action plan must be approved by the Department and be signed by the Grantee. Failure to sign a corrective action plan or meet the terms and deadlines set forth in the signed corrective action plan, is hereby deemed a violation of the terms of this Agreement for purposes of Early Termination, Article V(A)(iii). The corrective action plan is in addition to, and not in lieu of, any other equitable or legal remedy, including but not limited to Early Termination.

ARTICLE VII. AMENDMENT

This Agreement shall not be altered, changed, or amended except by instrument in writing duly executed by both the parties hereto.

ARTICLE VIII. REPORTS

A. Database Reporting

The Grantee shall report quarterly Project activity by entering such Project information as the Department and the Department of Finance and Administration may require, such information entered directly into a database maintained by the Department of Finance and Administration. Additionally, the Grantee shall certify on the Request for Payment form that updates have been maintained and are current in the database. The Grantee hereby acknowledges that failure to perform and/or certify updates into the database will delay or potentially jeopardize the reimbursement of funds. The Department shall give Grantee a minimum of thirty (30) days' advance written notice of any changes to the information the Grantee is required to report.

Quarterly reports are due on the last day of each quarter. Quarter end reporting periods are September 30th, December 31st, March 31st, and June 30th.

B. Requests for Additional Information/Project Inspection

During the term of this Agreement and during the period of time during which the Grantee must maintain records pursuant to Article VIII, the Department may:

i. request such additional information regarding the Project as it deems necessary; and
ii. conduct, at reasonable times and upon reasonable notice, onsite inspections of the Project.

Grantee shall respond to such requests for additional information within a reasonable period of time, as established by the Department.

ARTICLE IX. REQUEST FOR PAYMENT PROCEDURES AND DEADLINES

A. The Grantee shall request payment by submitting a Request for Payment, in the form provided by the Department. Payment requests are subject to the following procedures:
   i. The Grantee must submit a Request for Payment; and
   ii. Each Request for Payment must contain proof of payment by the Grantee or liabilities incurred by the Grantee showing that the expenditures are valid or are liabilities incurred by the Grantee in the form of actual unpaid invoices received by the Grantee for services rendered by a third party or items of tangible personal property received by the Grantee for the implementation of the Project; provided, however, that the Grantee may be reimbursed for unpaid liabilities only if the Department, in its sole and absolute discretion, agrees to do so and in accordance with any special conditions imposed by the Department.
   iii. In cases where the Grantee is submitting a Request for Payment to the Department based upon invoices received, but not yet paid, by the Grantee from a third party contractor or vendor, if the invoices comply with the provisions of this Agreement and are a valid liability of the Grantee, the Grantee shall make payment to those contractors or vendors within five (5) business days from the date of receiving reimbursement from the Department or such shorter period of time as the Department may prescribe in writing. The Grantee is required to certify to the Department proof of payment to the third party contractor or vendor within ten (10) business days from the date of receiving reimbursement from the Department.

B. The Grantee must obligate 5% of the Adjusted Appropriation Amount within six months of execution of the grant agreement and must have expended no less than 85% of the Adjusted Appropriation Amount six months prior to the reversion date.

C. Deadlines

Requests for Payments shall be submitted by Grantee to the Department on the earlier of:
   i. Immediately as they are received by the Grantee but at a minimum thirty (30) days from when the expenditure was incurred or liability of the Grantee was approved as evidenced by an unpaid invoice received by the Grantee from a third party contractor or vendor; or
   ii. Twenty (20) days from date of Early Termination; or

iii. Twenty (20) days from the Reversion Date.

D. The Grantee's failure to abide by the requirements set forth in Article II and Article IX herein will result in the denial of its Request for Payment or will delay the processing of Requests for Payment. The Department has the right to reject a payment request for the Project unless and until it is satisfied that the expenditures in the Request for Payment are for permissible purposes within the meaning of the Project Description and that the expenditures and the Grantee are otherwise in compliance with this Agreement, including but not limited to, compliance with the reporting requirements and the requirements set forth in Article II herein to provide Third Party Obligations and the Deadlines set forth in Article IX herein. The Department's ability to reject any Request for Payment is in addition to, and not in lieu of, any other legal or equitable remedy available to the Department due to Grantee's violation of this Agreement.

ARTICLE X. PROJECT CONDITIONS AND RESTRICTIONS; REPRESENTATIONS AND WARRANTIES

A. The following general conditions and restrictions are applicable to the Project:

i. The Project's funds must be spent in accordance with all applicable state laws, regulations, policies, and guidelines, including, but not limited to, the State Procurement Code (or local procurement ordinance, where applicable).

ii. The Project must be implemented in accordance with the New Mexico Public Works Minimum Wage Act, Section 13-4-10 through 13-4-17 NMSA 1978, as applicable. Every contract or project in excess of sixty thousand dollars ($60,000) that the Grantee is a party to for construction, alteration, demolition or repair or any combination of these, including painting and decorating, of public buildings, public works or public roads and that requires or involves the employment of mechanics, laborers or both shall contain a provision stating the minimum wages and fringe benefits to be paid to various classes of laborers and mechanics, shall be based upon the wages and benefits that will be determined by the New Mexico Department of Workforce Solutions to be prevailing for the corresponding classes of laborers and mechanics employed on contract work of a similar nature in the locality. Further, every contract or project shall contain a stipulation that the contractor, subcontractor, employer or a person acting as a contractor shall pay all mechanics and laborers employed on the site of the project, unconditionally and not less often than once a week and without subsequent unlawful deduction or rebate on any account, the full amounts accrued at time of payment computed at wage rates and fringe benefit rates not less than those determined pursuant to Section 13-4-11 (B) NMSA 1978 to be the prevailing wage rates and prevailing fringe benefit rates issued for the project.

iii. The Project may only benefit private entities in accordance with applicable law, including, but not limited to, Article IX, Section 14 of the Constitution of the State of New Mexico, the "Anti-Donation Clause."

iv. The Grantee shall not for a period of 10 years from the date of this agreement convert any property acquired, built, renovated, repaired, designed or developed with the Project's funds to uses other than those specified in the Project Description without the Department's and the Board of Finance's express, advance, written approval, which may include a requirement to reimburse the State for the cost of the project, transfer proceeds from the disposition of property to the State, or otherwise provide consideration to the State.

v. The Grantee shall comply with all federal and state laws, rules and regulations pertaining to equal employment opportunity. In accordance with all such laws, rules and regulations the Grantee agrees to assure that no person shall, on the grounds of race, color, national origin, sex, sexual preference, age or handicap, be excluded from employment with Grantee, be excluded from participation in the Project, be denied benefits or otherwise be subject to discrimination under, any activity performed under this Agreement. If Grantee is found to be not in compliance with these requirements during the life of this Agreement, Grantee agrees to take appropriate steps to correct any deficiencies. The Grantee's failure to implement such appropriate steps within a reasonable time constitutes grounds for terminating this Agreement.

B. The Grantee hereby represents and warrants the following:

i. The Grantee has the legal authority to receive and expend the Project's funds.

ii. This Agreement has been duly authorized by the Grantee, the person executing this Agreement has authority to do so, and, once executed by the Grantee, this Agreement shall constitute a binding obligation of the Grantee, enforceable according to its terms.

iii. This Agreement and the Grantee's obligations hereunder do not conflict with any law or ordinance or resolution applicable to the Grantee, the Grantee's charter (if applicable), or any judgment or decree to which the Grantee is subject.

iv. The Grantee has independently confirmed that the Project Description, including, but not limited to, the amount and Reversion Date, is consistent with the underlying appropriation in law.

v. The Grantee's governing body has duly adopted or passed as an official act a resolution, motion, or similar action authorizing the person identified as the official representative of the Grantee to sign the Agreement and to sign Requests for Payment.

vi. The Grantee shall abide by New Mexico laws regarding conflicts of interest, governmental conduct and whistleblower

protection. The Grantee specifically agrees that no officer or employee of the local jurisdiction or its designees or agents, no member of the governing body, and no other public official of the locality who exercises any function or responsibility with respect to this Grant, during their tenure or for one year thereafter, shall have any interest, direct or indirect, in any contract or subcontract, or the proceeds thereof, for work to be performed or goods to be received, pursuant to this Grant. Further, Grantee shall require all of its contractors to incorporate in all subcontracts the language set forth in this paragraph prohibiting conflicts of interest.

vii. No funds have been paid or will be paid, by or on behalf of the Grantee, to any person for influencing or attempting to influence an officer or employee of this or any agency or body in connection with the awarding of any Third Party Obligation and that the Grantee shall require certifying language prohibiting lobbying to be included in the award documents for all subawards, including subcontracts, loans and cooperative agreements. All subrecipients shall be required to certify accordingly.

ARTICLE XI. STRICT ACCOUNTABILITY OF RECEIPTS AND DISBURSEMENTS; PROJECT RECORDS

A. The Grantee shall be strictly accountable for receipts and disbursements relating to the Project's funds. The Grantee shall follow generally accepted accounting principles, and, if feasible, maintain a separate bank account or fund with a separate organizational code, for the funds to assure separate budgeting and accounting of the funds.

B. For a period of six (6) years following the Project's completion, the Grantee shall maintain all Project related records, including, but not limited to, all financial records, requests for proposals, invitations to bid, selection and award criteria, contracts and subcontracts, advertisements, minutes of pertinent meetings, as well as records sufficient to fully account for the amount and disposition of the total funds from all sources budgeted for the Project, the purpose for which such funds were used, and such other records as the Department shall prescribe.

C. The Grantee shall make all Project records available to the Department, the Department of Finance and Administration, and the New Mexico State Auditor upon request. With respect to the funds that are the subject of this Agreement, if the State Auditor or the Department of Finance and Administration finds that any or all of these funds were improperly expended, the Grantee may be required to reimburse to the State of New Mexico, to the originating fund, any and all amounts found to be improperly expended.

ARTICLE XII. IMPROPERLY REIMBURSED FUNDS

If the Department determines that part or all of the Appropriation Amount was improperly reimbursed to Grantee, including but not limited to, Project funds reimbursed to Grantee based upon fraud, mismanagement, misrepresentation, misuse, violation of law by the Grantee, or violation of this Agreement, the Grantee shall return such funds to the Department for disposition in accordance with law.

ARTICLE XIII. LIABILITY

Neither party shall be responsible for liability incurred as a result of the other party's acts or omissions in connection with this Agreement. Any liability incurred in connection with this Agreement is subject to immunities and limitations of the New Mexico Tort Claims Act.

ARTICLE XIV. SCOPE OF AGREEMENT

This Agreement constitutes the entire and exclusive agreement between the Grantee and Department concerning the subject matter hereof. The Agreement supersedes any and all prior or contemporaneous agreements, understandings, discussions, communications, and representations, written or verbal.

ARTICLE XV. REQUIRED NON-APPROPRIATIONS CLAUSE IN CONTRACTS FUNDED IN WHOLE OR PART BY FUNDS MADE AVAILABLE UNDER THIS AGREEMENT

The Grantee acknowledges, warrants, and agrees that Grantee shall include a "non-appropriations" clause in all contracts between it and other parties that are (i) funded in whole or part by funds made available under this Agreement and (ii) entered into after the effective date of this Agreement that states:

"The terms of this Agreement are contingent upon sufficient appropriations and authorization being made by the Legislature of New Mexico for the performance of this Agreement. If sufficient appropriations and authorization are not made by the Legislature, the **CITY OF SANTA FE** may immediately terminate this Agreement by giving Contractor written notice of such termination. The **CITY OF SANTA FE**'s decision as to whether sufficient appropriations are available shall be accepted by the Contractor and shall be final. Contractor hereby waives any rights to assert an impairment of contract claim against the **CITY OF SANTA FE** or the

Department of Finance and Administration, Local Government Division (DFA/LGD) or the State of New Mexico in the event of immediate or Early Termination of this Agreement by the **CITY OF SANTA FE** or the Department"

ARTICLE XVI. REQUIRED TERMINATION CLAUSE IN CONTRACTS FUNDED IN WHOLE OR PART BY FUNDS MADE AVAILABLE UNDER THIS AGREEMENT

Grantee acknowledges, warrants, and agrees that Grantee shall include the following termination clause in all contracts that are (i) funded in whole or part by funds made available under this Agreement and (ii) entered into after the effective date of this Agreement:

"This contract is funded in whole or in part by funds made available under a DFA/LGD Grant Agreement. Should the DFA/LGD early terminate the grant agreement, the CITY OF SANTA FE may early terminate this contract by providing Contractor written notice of such termination. In the event of termination pursuant to this paragraph, the CITY OF SANTA FE only liability shall be to pay Contractor for acceptable goods delivered and services rendered before the termination date."

Grantee hereby waives any rights to assert an impairment of contract claim against the Department or the State of New Mexico in the event of Early Termination of this Agreement by the Department.

ARTICLE XVII. COMPLIANCE WITH UNIFORM FUNDING CRITERIA.

A. Throughout the term of this Agreement, Grantee shall:
    1. submit all reports of annual audits and agreed upon procedures required by Section 12-6-3(A)-(B) NMSA 1978 by the due dates established in 2.2.2 NMAC, reports of which must be a public record pursuant to Section 12-6-5(A) NMSA 1978 within forty-five days of delivery to the State Auditor;
    2. have a duly adopted budget for the current fiscal year approved by its budgetary oversight agency (if any);
    3. timely submit all required financial reports to its budgetary oversight agency (if any); and
    4. have adequate accounting methods and procedures to expend grant funds in accordance with applicable law and account for and safeguard grant funds and assets acquired by grant funds.
B. In the event Grantee fails to comply with the requirements of Paragraph A of this Article XVII, the Department may take one or more of the following actions:
    1. suspend new or further obligations pursuant to Article VI(A) of this Agreement;
    2. require the Grantee to develop and implement a written corrective action plan pursuant to Article VI(D) of this Agreement to remedy the non-compliance;
    3. impose special grant conditions to address the non-compliance by giving the Grantee notice of such special conditions in accordance with Article III of this Agreement; the special conditions shall be binding and effective on the date that notice is deemed to have been given pursuant to Article III; or
    4. terminate this Agreement pursuant to Article V(A) of this Agreement.

ARTICLE XVIII. SEVERANCE TAX BOND AND GENERAL OBLIGATION BOND PROJECT CLAUSES

A. Grantee acknowledges and agrees that the underlying appropriation for the Project is a severance tax bond or general obligation bond appropriation, and that the associated bond proceeds are administered by the New Mexico State Board of Finance (SBOF), an entity separate and distinct from the Department. Grantee acknowledges and agrees that (i) it is Grantee's sole and absolute responsibility to determine through SBOF staff what (if any) conditions are currently imposed on the Project; (ii) the Department's failure to inform Grantee of a SBOF imposed condition does not affect the validity or enforceability of the condition; (iii) the SBOF may in the future impose further or different conditions upon the Project; (iv) all SBOF conditions are effective without amendment of this Agreement; (v) all applicable SBOF conditions must be satisfied before the SBOF will release to the Department funds subject to the condition(s); and (vi) the Department's obligation to reimburse Grantee from the Project is contingent upon the then current SBOF conditions being satisfied.

B. Grantee acknowledges and agrees that the SBOF may in its sole and absolute discretion remove a project's assigned bond proceeds if the project doesn't proceed sufficiently. Entities must comply with the requirement to encumber five percent (5%) of Project funds within six months of bond issuance as certified by the grantee in the Bond Questionnaire and Certification documents submitted to the SBOF. Failure to comply may result in the bond proceeds reassignment to a new ready project. If this should occur this grant agreement will be suspended until the entity has demonstrated readiness as determined by the SBOF and the Department.

C. Grantee acknowledges and agrees that this Agreement is subject to the SBOF's Bond Project Disbursements rule, NMAC 2.61.6, as may be amended or re-codified. The rule provides definitions and interpretations of grant language for the purpose of determining whether a particular activity is allowable under the authorizing language of the agreement.

[THIS SPACE LEFT BLANK INTENTIONALLY]

IN WITNESS WHEREOF, the parties have duly executed this Agreement as of the date of execution by the Department.

GRANTEE

_____
Entity Name

_____
Signature of Official with Authority to Bind Grantee

By: _____
(Print Name)

Its: _____
(Title)

_____
Date

DEPARTMENT OF FINANCE AND ADMINISTRATION
LOCAL GOVERNMENT DIVISION

_____
By:

Its: Cabinet Secretary or Designee

_____
Date

IN WITNESS WHEREOF, the parties have executed this Capital Appropriation Project as of the dates set forth below.

CITY OF SANTA FE:

SEE ABOVE

_____

ALAN WEBBER, MAYOR

ATTEST:

_____

GERALYN CARDENAS, INTERIM CITY CLERK

CITY ATTORNEY'S OFFICE:

Kevin L. Nault

Kevin L. Nault (Aug 9, 2024 15:36 MDT)

ASSISTANT CITY ATTORNEY

FINANCE DIRECTOR:

Emily K. Oster

_____

EMILY OSTER

STATE OF NEW MEXICO
GRANT PROJECT
Request for Payment Form
Exhibit 1

I. Grantee Information

(Make sure information is complete & accurate)

A. Grantee: _____

B. Address: _____

(Complete Mailing, including Suite, if applicable)

_____

City, State, Zip

C. Contact Name/Phone #: _____

D. Grant No: _____

E. Project Title: _____

F. Grant Expiration Date: _____

II. Payment Computation

A. Payment Request No. _____

B. Grant Amount: _____

C. AIPP Amount *(If Applicable)* : _____

D. Funds Requested to Date: _____

E. Amount Requested this Payment: _____

F. Reversion Amount (I*f Applicable*): _____

G. Grant Balance: _____

H. Final Request for Payment (*if Applicable*)

III. Fiscal Year : _____

(The State of NM Fiscal Year is July 1, 20XX through June 30, 20XX of the following year)

IV. ☐ Reporting Certification:

I hereby certify to the best of my knowledge and belief, that reporting is up to date; to include the accuracy of expenditures and grant balance, project status, project phase, achievements and milestones; and in compliance with the Grant Agreement.

V. ☐ Compliance Certification:

Under penalty of law, I hereby certify to the best of my knowledge and belief, the above information is correct; expenditures are properly documented, and are valid expenditures or actual receipts; and that the grant activity is in full compliance with Article IX, Sec. 14 of the New Mexico Constitution known as the "anti donation" clause.

Grantee Fiscal Officer
or **Fiscal Agent** (*if applicable*)

Printed Name

Date: _____

Grantee Representative

Printed Name

Date: _____

(State Agency Use Only)

Vendor Code: _____ **Fund No.:** _____ **PO #** _____ **Loc No.:** _____

I certify that the State Agency financial and vendor file information agree with the above submitted information.

Division Fiscal Officer Date

Division Project Manager Date

NOTICE OF OBLIGATION TO REIMBURSE GRANTEE
EXHIBIT 2

Notice of Obligation to Reimburse Grantee # _____

DATE: _____

TO: Department Representative: _____, _____

FROM: Grantee Entity: _____

Grantee Official Representative: _____

SUBJECT: Notice of Obligation to Reimburse Grantee

Grant Number: _____

Grant Termination Date: _____

As the designated representative of the Department for Grant Agreement number _____ entered into between Grantee and the Department, I certify that the Grantee has submitted to the Department the following third party obligation executed, in writing, by the third party's authorized representative:

Vendor or Contractor: _____

Third Party Obligation Amount: _____

Vendor or Contractor: _____

Third Party Obligation Amount: _____

I certify that the State is issuing this Notice of Obligation to Reimburse Grantee for permissible purposes within the scope of the project description, subject to all the terms and conditions of the above referenced Grant Agreement.

Grant Amount (Minus AIPP if applicable): _____

The Amount of this Notice of Obligation: _____

The Total Amount of all Previously Issued Notices of Obligation: _____

The Total Amount of all Notices of Obligation to Date: _____

Note: Contract amounts may exceed the total grant amount, but the invoices paid by the grant will not exceed the grant amount.

Department Rep. Approver: _____

Title: _____

Signature: _____

Date: _____

1 Administrative and/or Indirect Cost – generally, the legislation authorizing the issuance of bonds prohibits the use of its proceeds for indirect expenses (e.g. penalty fees or damages other than pay for work performed, attorney fees, and administrative fees). Such use of bond proceeds shall not be allowed unless specifically authorized by statute.

Log # *{Finance use only}*:	
Journal # *{Finance use only}*:	

City of Santa Fe, New Mexico
BUDGET AMENDMENT RESOLUTION (BAR)

DEPARTMENT / DIVISION NAME	DATE
Public Works / Parks/Trails CIP	8/15/2024

ITEM DESCRIPTION	ORG	OBJECT	PROJECT	INCREASE	DECREASE
EXPENDITURES				*{enter as positive #}*	*{enter as negative #}*
WIP Construction - Ft. Marcy Improvements	3559980	572970	PWD2535527	5,000,000	
REVENUES				*{enter as negative #}*	*{enter as positive #}*
DFA - 24-I3142 Ft. Marcy Improvements	3559980	490210	PWD2535527	(5,000,000)	
				$ -	$ -

JUSTIFICATION: *(use additional page if needed)*
--Attach supporting documentation/memo

Agreement with NM DFA to plan, design, and construct, repair, renovate and equip Ft. Marcy Park, including accessibility improvements, walking and driving paths, restrooms, a concession stand, and grandstands in the total amount of $5,000,000 (24-I3142 exp 06/30/28)

{Complete section below if BAR results in a net change to ANY Fund}

Fund(s) Affected	Fund Balance Increase/(Decrease)
TOTAL:	0

{Use this form for Finance Committee/ City Council agenda items ONLY}

CITY COUNCIL APPROVAL

City Council Approval Date

Agenda Item #:

Halona Crowe	8/15/2024	Andy Hopkins	Oct 30, 2024
Prepared By *{print name}*	Date	Budget Officer	Date
Melissa McDonald	Oct 29, 2024		
Division Director Signature	Date	Finance Director *{≤ $5,000}*	Date
Regina Wheeler (Oct 29, 2024 16:15 MDT)	Oct 29, 2024		
Department Director Signature	Date	City Manager *{≤ $60,000}*	Date

City of Santa Fe New Mexico

Finance Department

Project Ledger Request Form

Date of Request: 08/15/2024

Project Title: Ft Marcy Park Improvements

Project Type: ☑ CIP ☑ Grant ☐ Internal Tracking

Project ID: PWD2535527
Grant ID: S2525
Approved By: MB 08/21/24
Entered By: SS 08.20 (Finance Use Only)

Department: Public Works Project Manager: Scott Overlie Ext: 505-231-6194

Project Date Range: 08/15/2024 to 06/30/28 ☑ Create Fixed Asset

---

☐ Multi-Funding (complete all funding sources, should equal 100%)

Funding Source: DFA 24-I3142 % of Funding: 100%

MUNIS ORG: 3559980 MUNIS OBJ: 490210 Awarded Amount: $5,000,000

Funding Source: _____ % of Funding: _____

MUNIS ORG: _____ MUNIS OBJ: _____ Awarded Amount: _____

Expense String Phase:

A project must have at least one phase identified, this can be used as an additional level of tracking, for example, CIP - Design, Construction, etc. For Grants can be used as reimbursable types, such as transportation, salaries.

(You can create more than one phase and you can default MUNIS ORGs and OBJs, optional)

Phase: Construction MUNIS ORG: 3559980 MUNIS OBJ: 572970

Phase: _____ MUNIS ORG: _____ MUNIS OBJ: _____

Phase: _____ MUNIS ORG: _____ MUNIS OBJ: _____

Contract number: _____ Comments/Other: _____

GRANTS ONLY:

Grantor Name: DFA 24-I3142 Awarded Amount: $5,000,000

AR Charge Code: 3559980.490210 ☐ Grant funds multiple projects (Complete a form for each project)

Grantor Id: 700007 Federal CFDA (if applicable): _____

(If grants please provide all grant award documents with form) ☑ Attached Grant Documentation

Signature: Scott Overlie
Scott Overlie (Oct 29, 2024 15:01 MDT)

Email: saoverlie@santafenm.gov

Signature: Sean Moody

Email: sxmoody@santafenm.gov

CITY OF SANTA FE

Date: October 23, 2024

To: Governing Body

Via: Henri Hammond-Paul, Community Health and Safety Director
HENRI HAMMOND-PAUL (Oct 31, 2024 09:35 MDT)
Brian Moya, Fire Department Chief
Brian J Moya (Oct 30, 2024 11:02 MDT)

From: **Brian Williams, Office of Emergency Management Director**
Nathan Miller, Wildland Fire Superintendent
BRIAN WILLIAMS (Oct 30, 2024 11:01 MDT)

Subject: **Hazard Mitigation Grant Program Grant Approval – Hazard Mitigation Plan and Wildfire Risk Assessment Plans**

ITEM AND ISSUE:
Request Approval of the 2023 Hazardous Mitigation Grant Program (HMGP) Sub-Grant Agreement DR-4652-0011-NM in the Total Amount of $163,509.97 with the New Mexico Department of Homeland Security and Emergency Management for Updating the City of Santa Fe Hazard Mitigation Plan and Development of a Wildfire Risk Assessment. Brian Williams, Director Office of Emergency Management, bgwilliams@santafenm.gov.

Request Approval of a New Mexico Match Fund Grant 24-ZI5044- MG25-84 in the Total Amount of $38,934.25 with the New Mexico Department of Finance and Administration for Federal Grant Match Funds. Brian Williams, Director Office of Emergency Management, bgwilliams@santafenm.gov.

Request Approval of a FY25 BAR to Budget $163,509.97 in Awarded Grant Funds to the Office of Emergency Management Professional Contracts.

Action Requested: Grant Approval (2); BAR approval

BACKGROUND AND SUMMARY:
The City of Santa Fe applied for this reimbursable grant through the New Mexico Department of Homeland Security and Emergency Management (DHSEM) and the Federal Emergency Management Agency (FEMA). The Hazard Mitigation Grant Program (HMGP) supports states, local communities, tribes and territories as they undertake hazard mitigation projects, reducing the risks they face from disasters and natural hazards.

The Office of Emergency Management and the Santa Fe Fire Department Wildland Fire Division coordinated to secure this grant for developing a comprehensive update to the City of Santa Fe's Hazard Mitigation Plan (HMP), as well as developing a new citywide Wildfire Risk Assessment. Both efforts will be contractor lead in accordance with relevant requirements from FEMA.

The completed Hazard Mitigation Plan will be used to prioritize future mitigation projects as well as updates to the City's Threat and Hazard Identification and Risk Assessment, and Integrated Preparedness Plans.

The Wildfire Risk Assessment will additionally include an analysis of existing wildland firefighting capabilities and the City's current preparedness for responding to wildfire threats, as well as recommendations for improving these capabilities.

The Office of Emergency Management applied for matching funds to cover the local share through the New Mexico Department of Finance and Administration (DFA) after receiving the federal grant award. These funds will cover the entirety of the local share requirement (25%). The goal of this program is to leverage state funds to allow for increased grant applications and awards for local communities throughout the state. The HMGP grant amount also includes $7,772.05 in 100% federally funded subrecipient management costs to assist with capacity in managing the grant.

The Office of Emergency Management will manage both grants and the Hazard Mitigation Plan project, while the Fire Department will manage the Wildfire Risk Assessment, with input and assistance from the Office of Emergency Management and other stakeholders.

The term of the grant ends on November 14, 2027.

PROCUREMENT METHOD:
Not Applicable. Grant approval only.

Chief Procurement Officer Approval:_____ **Date:**_____
Comment/Exceptions:_____

Supporting Information:

CONTRACT NUMBER:
The FY25 Project ledger number is OEM2522101

SOURCE/REVENUE: ☐Expense ☒Revenue

The funding source is:
Federal Share
Fund Name/Number: Emergency Services/Fund 231
Munis Org Name/Number: Emergency Management/2212850
Munis Object Name/Number: Fed Grant (FEMA)/490580

Local Share
Fund Name/Number: Emergency Services/Fund 231
Munis Org Name/Number: Emergency Management/2212850
Munis Object Name/Number: State Grant (DFA)/490210

List grant award number: *DR-4652-0011-NM (FEMA) / 24-ZI5044- MG25-84 (DFA)*

Grant Manager / Accounting Officer Approval: Matthew Bonifer
Matthew Bonifer (Oct 31, 2024 10:10 MDT) **Date:** 10/31/2024
Comment/Exceptions: _____

Project Ledger #: OEM2522101

Budget Officer Approval: Andy Hopkins **Date:** 10/31/2024
Comment/Exceptions: _____

CAPITAL ASSET (will this procurement result in a tangible item that costs more than $5,000?):

☐Yes | ☒ No

 # (if known): _____

Repair or Replacement of Existing Equipment:

☐Yes | ☒ No
If yes -> ☐Repair | ☐ Replacement

Please explain: _____

Capital Project:
(New and improvement projects that are going to cost $10,000 or more)
☐ Yes | ☒ No

Project Ledger #: _____

Anticipated length of project: 24 months _____

Asset Manager Approval: _____ **Date:** _____
Comment/Exceptions: _____

Department Approvals:
IT Components: ☐ **Yes | ☒ No**
Vehicles: ☐ **Yes | ☒ No**
Facilities, Furniture, Fixtures, Equipment: ☐ **Yes | ☒ No**

Approval: _____ **Title:** _____ **Date**: _____
Approval: _____ **Title:** _____ **Date**: _____
Comment & Exceptions: _____

Department Contract Administrator Contact Info:
Justin Gonzales, jmgonzales@santafenm.gov

ATTACHMENTS:

1. Federal Sub-Recipient Grant Agreement
2. State Grant Agreement
3. Budget Amendment Resolution

Log # *{Finance use only}*:	
Journal # *{Finance use only}*:	

City of Santa Fe, New Mexico
BUDGET AMENDMENT RESOLUTION (BAR)

DEPARTMENT / DIVISION NAME	DATE
Public Works / Stormwater CIP	9/11/2024

ITEM DESCRIPTION	ORG	OBJECT	PROJECT	INCREASE	DECREASE
EXPENDITURES				*{enter as positive #}*	*{enter as negative #}*
PROFESSIONAL CONTRACTS - Project Costs	2212850	510300	OEM2522101	155,737	
PROFESSIONAL CONTRACTS - Grant Management Costs	2212850	510300	OEM2522101	7,772	
REVENUES				*{enter as negative #}*	*{enter as positive #}*
FEMA - Hazard Mitigation Plan / Wildfire Risk Assessment	2212850	490580	OEM2522101	(116,803)	
DFA - Hazard Mitigation Plan / Wildfire Risk Assessment	2212850	490210	OEM2522101	(38,934)	
FEMA - Subrecipient Management Costs	2212850	490580	OEM2522101	(7,772)	
				$ (0.00)	$ -

JUSTIFICATION: *(use additional page if needed)*
--Attach supporting documentation/memo

FY 25 budget increase for subrecipient grant award: DR-5430-0011-NM: FEMA Hazard Mitigation Grant for Hazard Mitigation Plan Update and Wildfire Risk Assessment in the amount of $116,803.77 for Planning and $7,772.05 for Management Costs.

Expires 11/14/2027

FY 25 budget increase for Department of Finance and Administration State Matching Grant in the amount of $38,934.25 to cover 25% local match requirement of FEMA Grant (DR-5430-0012-NM). Expires 5/14/2028

{Complete section below if BAR results in a net change to ANY Fund}

Fund(s) Affected	Fund Balance Increase/(Decrease)
TOTAL:	**0**

Kyle Morgan — 9/11/2024
Prepared By *{print name}* — Date

Division Director Signature *{optional}* — Date

HENRI HAMMOND-PAUL (Oct 31, 2024 09:35 MDT) — 10/31/2024
Department Director Signature — Date

{Use this form for Finance Committee/ City Council agenda items ONLY}

CITY COUNCIL APPROVAL

City Council Approval Date:

Agenda Item #:

Andy Hopkins — 10/31/2024
Budget Officer — Date

Finance Director *{≤ $5,000}* — Date

City Manager *{≤ $60,000}* — Date

New Mexico
Department *of* Finance
and Administration

407 Galisteo St,
Santa Fe, NM 87501
(505) 827-4985

Governor Michelle Lujan Grisham
Cabinet Secretary Wayne Propst

Infrastructure Planning & Development Division
Wesley Billingsley, Division Director

RECIPIENT:

City of Santa Fe

APPROPRIATION NUMBER:	ALLOCATION AMOUNT:	REVERSION DATE:
24-ZI5044- MG25-84	$38,934.25	Six (6) months after the end date of the associated federal grant's period of performance.

ALLOCATION PURPOSE

$38,934.25 for costs to meet cost sharing requirements for City of Santa Fe Hazard Mitigation Plan Update & Wildfire Risk Assessment. Funds unexpended by the date specified in the period of performance terms of your federal grant agreement, will be reverted to the State of New Mexico within 6 months of the federal grant closeout.

ALLOCATION DISBURSEMENT

100% of the allocated funds will be disbursed upon execution of the agreement. The Allocation Recipient agrees to submit Annual reports using Exhibit A, Match Fund Annual Report Form, providing updates on the status of the expenditures from this appropriation. The Recipient also understands and agrees to use the allocated funds in accordance with the New Mexico Match Fund Policy.

CERTIFICATION

I hereby certify that City of Santa Fe

1. Will only use the allocated funds to carry out and/or perform activities described in allocation language.
2. Will submit annual reporting through the Match Fund Annual Report link.
3. Will adhere to the Match Fund policy.
4. Will adhere to the provisions of Attachment A- Special Provisions

John Blair
John Blair (Nov 1, 2024 12:45 MDT)

City Manager, **City of Santa Fe** — Date: 11/01/2024

Emily K. Oster

Finance Director, **City of Santa Fe** — Date: 11/01/2024

PUBLICITY

Any Publicity regarding this agreement must not be released without prior written approval from the DFA. For purposes of this agreement, "Publicity" means notices, informational pamphlets, press releases, email response, research, reports, signs, and similar public notices prepared by or for the Subrecipient or jointly with others. The Recipient shall not issue, without consent of the DFA, any press release, or make any public announcement with respect to this agreement. In the performance of responsibilities under this agreement, the Recipient agrees to obtain approval of the DFA in advance with respect to all Public Relations, all communications with media, or all communications with any other member of the public with respect to this agreement, except to acknowledge that an agreement does exist. For purposes of this agreement, "Public Relations" includes community relations and means those activities dedicated to maintaining the image of the DFA or maintaining or promoting understanding and favorable relations with the community or public at large or any segment of the public. For violations of this provision, as determined solely by the DFA, the DFA reserves the right to terminate this agreement.

New Mexico
Department *of* Finance
and Administration

407 Galisteo St,
Santa Fe, NM 87501
(505) 827-4985

Governor Michelle Lujan Grisham
Cabinet Secretary Wayne Propst

Infrastructure Planning & Development Division
Wesley Billingsley, Division Director

APPROVAL

In accordance with the authority conferred on the Department of Finance & Administration by the statute appropriating these funds, I hereby approve this certification for MG25-84 in the amount of $38,934.25.

Wesley Billingsley
Director, Infrastructure Planning & Development Division

Date

New Mexico
Department *of* Finance
and Administration

407 Galisteo St,
Santa Fe, NM 87501
(505) 827-4985

Governor Michelle Lujan Grisham
Cabinet Secretary Wayne Propst

Infrastructure Planning & Development Division
Wesley Billingsley, Division Director

OPTIONAL ATTACHMENT A
SPECIAL CONDITIONS

The grant award requires grantees' accounting methods and procedures, including their internal control framework, to be scrutinized, so as to safeguard State appropriations and assets acquired with such appropriations. This Matching Grant Special Grant Condition(s) **Attachment A** is necessary pursuant to Executive Order 2013-006 (2.A.2.a-c, if applicable), due to the Grantees' material weaknesses, significant deficiencies, or findings that raised concerns as to the ability to expend grant funds in accordance with applicable law in the organization's FY23 audit. The Special Conditions identified below apply to the authorized agent, City of Santa Fe.

Procurement - All purchases or contracts the Grantee enters that shall use funding from the Department capital appropriations grant must be approved by the Department prior to the initiation of implementing purchasing documents. The Grantee shall receive such prior approval via official correspondence from the Department, which may be through letter or email. The Grantee shall submit the following to the Department in pursuit of prior approval: purchasing policies and procedures, CFO certification, documentation of management and program approval, policies and procedures governing purchasing and contracting, a copy of the current procurement and contracting policies, and documentation regarding informing staff responsible for purchasing and contracting on such policies and procedures.

Cash Management – policies and procedures on cash management of federal funds. Provide procedures used to draw and disburse federal funds. Provide procedures to reconcile draw amounts, deposits and disbursements; and to prepare federal cash reporting documents to ensure compliance with federal regulations.

The City of Santa was required to and has provided sufficient documentation regarding procurement and cash management as referenced in the City of Santa Fe's FY23 Audit file. Therefore, the criteria to enter into this agreement have been met.

Wesley Billingsley Director, Infrastructure Planning & Development Division	Date

New Mexico
Department *of* Finance
and Administration

407 Galisteo St,
Santa Fe, NM 87501
(505) 827-4985

Governor Michelle Lujan Grisham
Cabinet Secretary Wayne Propst

Infrastructure Planning & Development Division
Wesley Billingsley, Division Director

Match Fund Annual Report Form
Exhibit A

Appropriation Recipient: _____

Appropriation Number: _____

Use of Appropriation Funds	**Amount**
Personnel Expenses	$ 0.00
Contract Expenses	$ 0.00
Other Expenses	$ 0.00
Total Amount of Appropriation Funds Expended	$ 0.00

Narrative *Describe the outcomes, results, benefit, and or uses of the appropriation funds*

IN WITNESS WHEREOF, the City of Santa Fe has agreed to this Grant Award as of the date of the signature by the required approval authorities below.

ATTEST:

_____
GERALYN CARDENAS, INTERIM CITY CLERK

CITY ATTORNEY'S OFFICE:

Oct 14, 2024
REBECCA MNUK-HERRMANN, ASSISTANT CITY ATTORNEY

Match Fund Grant Agreement MG25-84 with CoSF signature page

Final Audit Report 2024-10-14

Created:	2024-10-08
By:	Amy Cawthon (amcawthon@santafenm.gov)
Status:	Signed
Transaction ID:	CBJCHBCAABAASuWLZ1sP1EGivkr6LBS-t0LZF5Q-ob_I

"Match Fund Grant Agreement MG25-84 with CoSF signature page" History

Document created by Amy Cawthon (amcawthon@santafenm.gov)
2024-10-08 - 5:31:47 PM GMT- IP address: 63.232.20.2

Document emailed to Rebecca Mnuk-Herrmann (ramnukherrmann@santafenm.gov) for signature
2024-10-08 - 5:32:18 PM GMT

Email viewed by Rebecca Mnuk-Herrmann (ramnukherrmann@santafenm.gov)
2024-10-14 - 10:00:27 PM GMT- IP address: 174.240.19.127

Document e-signed by Rebecca Mnuk-Herrmann (ramnukherrmann@santafenm.gov)
Signature Date: 2024-10-14 - 10:00:50 PM GMT - Time Source: server- IP address: 174.240.19.127

Agreement completed.
2024-10-14 - 10:00:50 PM GMT

Powered by Adobe Acrobat Sign

State of New Mexico
DEPARTMENT OF HOMELAND SECURITY & EMERGENCY MANAGEMENT
P.O. Box 27111
Santa Fe, NM 87502

SUB-RECIPIENT GRANT AGREEMENT
HAZARD MITIGATION GRANT PROGRAM

CFDA 97.039 : Hazard Mitigation Grant Program

1. SUB-GRANT NO.	2. SUB-RECIPIENT NAME		3. PROJECT NAME
DR-4652-0011-NM	City of Santa Fe		City of Santa Fe Hazard Mitigation Plan Update & Wildfire Risk Assessment
4. STATE DFA VENDOR NUMBER	**5. EIN NUMBER**	**6. SAM UEI NUMBER**	**7. CAGE CODE**
54360	85-6000168	QLN2YKMMJ8X6	4C987
8. SUB-RECIPIENT PHYSICAL ADDRESS	**9. SUB-RECIPIENT REMIT ADDRESS**		
200 Lincoln Ave, Santa Fe, NM 87501	-		
10. DHSEM CONTACT NAME:	**11. CONTACT DESK PHONE:**	(225) 313-1774	
Natalie West	**CONTACT EMAIL ADDRESS:**	DHSEM.mitigation@dhsem.nm.gov cc: natalie.west@dhsem.nm.gov	
12a. PERFORMANCE PERIOD START DATE	7/23/2024	**12b. PERFORMANCE PERIOD END DATE**	11/14/2027
13. TOTAL AWARD AMOUNT:	$163,509.07		
13a. FEDERAL SHARE	**13b. LOCAL SHARE**	**13c. STATE SHARE**	
$124,574.82	$38,934.25	$0.00	

14a. NAME OF PROJECT AWARD		14b. FEDERAL SHARE	14c. NON-FEDERAL SHARE
1	Contractual	$113,104.79	$37,701.59
2	Travel	$3,697.98	$1,232.66
3	SRMC	$7772.05	
TOTAL AMOUNT OF PROJECT		$124,574.82	$38,934.25

WHEREAS The State of New Mexico will serve as the "pass-through entity" with respect to the State's role in providing sub-awards and administering grant assistance provided to sub-recipients and may, subject to a Memorandum of Agreement, directly support project development and administration.

WHEREAS funding has been obligated from the Federal Emergency Management Agency pursuant to a request by the applicant, The Sub-Recipient, City of Santa Fe.

NOW, THEREFORE, it is mutually understood and agreed between the recipient NMDHSEM, and **City of Santa Fe** hereinafter referred to as "sub-recipient," as follows:

ARTICLE 1: REQUIREMENTS AND ASSURANCES

A. The sub-recipient hereby agrees that the performance period for the grant identified on Page 1, Box 1. is consistent with the performance period identified on Page 1, Box 12a. and 12b. This Sub-recipient Grant Agreement, as amended, shall remain open for administrative purposes if necessary to achieve final payment and financial reconciliation.

B. The sub-recipient hereby agrees that the sub-recipient official signing this Sub-recipient Grant Agreement certifies that all financial expenditures, including all supporting documents submitted for reimbursement, have been incurred by the sub-recipient and are eligible and allowable expenditures consistent with the guidelines for this award. The sub-recipient agrees to follow reasonable professional standards in all financial management and bookkeeping procedures necessary to carry out this agreement.

C. The sub-recipient hereby agrees that no member, officer, or employee of the sub-recipient organization, or its designees or agents, no member of the governing body of the locality in which the program is situated, and no other public official of such locality or localities who exercises any functions or responsibilities with respect to the program during his or her tenure or for one year after that, shall have any interest, direct or indirect, in any contract or subcontract, or the process thereof, for work to be performed in connection with this Sub-recipient Grant Agreement; the sub-recipient shall incorporate in all such contracts a provision prohibiting such interest pursuant to the purposes of this Sub-recipient Grant Agreement.

D. The sub-recipient hereby agrees that it understands and agrees that it cannot use any federal funds, either directly or indirectly, in support of the enactment, repeal, modification, or adoption of any law, regulation, or policy, at any level of government, without the express written approval of the State of New Mexico or FEMA.

E. The sub-recipient hereby agrees that FEMA reserves a royalty-free, non-exclusive, and irrevocable license to reproduce, publish, or otherwise use and authorize others to use, for federal government purposes: (1) the copyright in any work developed under this Sub-recipient Grant Agreement; and (2) any rights of copyright to which the sub-recipient purchases ownership with federal support. The sub-recipient agrees to consult with FEMA through NMDHSEM regarding allocating any patent rights that arise from or are purchased with this funding.

F. The sub-recipient hereby agrees that signatures of the sub-recipient officials on this Sub-recipient Grant Agreement attest to the sub-recipient's understanding, acceptance, and compliance with Lobbying, Debarment, Suspension, and Other Responsibility Matters; Drug- free Workplace; Conflict of Interest, and Non-Supplanting certifications. Federal funds will not be used to supplant state or local funds. Federal funds will be used to supplement existing sub-recipient funding to augment program activities and not replace those funds which have been appropriated in the budget for the same purpose.

G. The sub-recipient hereby agrees that their accounting system allows for the separation of fund

sources. Funding provided under this Sub-recipient Grant Agreement cannot be commingled with funds from other federal, state, or local agencies, and each project must be accounted for separately.

H. The sub-recipient hereby agrees that it shall comply with applicable Federal Civil Rights Laws and Regulations: Title VI of the Civil Rights Act of 1964, Section 504 of the Rehabilitation Act of 1973, Title IX of the Education Amendments of 1972, Age Discrimination Act of 1975, and Americans with Disabilities Act of 1991. The sub-recipient will take reasonable steps to ensure Limited English Proficient (LEP) persons have meaningful access to its programs and activities. Executive Order 13379 Individuals with Disabilities in Emergency Preparedness, requires the government to support safety and security for individuals with disabilities in situations involving disasters, including earthquakes, tornadoes, fires, floods, hurricanes, and acts of terrorism.

I. The sub-recipient hereby certifies that for its employees, it has an Affirmative Action Plan/Equal Employment Opportunity Plan (EEOP) if not exempted by the Federal Government or New Mexico rule or statute. An EEOP is not required for sub-recipients of less than $25,000 or fewer than 50 employees.

J. The sub-recipient hereby certifies that its employees are eligible to work in the United States as verified by Form I–9, Immigration & Naturalization Service Employment Eligibility.

K. The sub-recipient hereby agrees that it is the responsibility of the sub-recipient to fully understand and comply with the requirements of the following, where such requirements apply to the sub-recipient set forth in:

1. 2 C.F.R. § 200: Code of Federal Regulations
2. 44 C.F.R. parts 7, 9, 10, 13, 14, 17, 18, 25, 206, 220, 221, 44 C.F.R. Part 209, 2 C.F.R. Part 200 and any other applicable FEMA policy memoranda and guidance documents
3. FEMA Hazard Mitigation Assistance Program and Policy Guide
4. New Mexico State Procurement Code
   New Mexico Administrative Code Title 2 – Public Finance https://www.srca.nm.gov/nmac-home/nmac-titles/title-2-public-finance/

ARTICLE 2: REIMBURSEMENT OF FUNDS

The NMDHSEM will apply the following procedures for making payments to sub-recipients:

A. Payment of Funds, General: Once FEMA has obligated funds and NMDHSEM has budgeted and encumbered those funds, the Cabinet Secretary is authorized to advance funds, as permissible, and to consider requests for payments for progress and completion based on proper review and approvals, in accordance with the sub-grant agreement or amendment as described below. Review and audit of expending and accounting of federal awards and state funds will be conducted to ensure records, reports, and documentation for compliance and tracing of funds are accounted for; 2 C.F.R. §§ 200.302(b)(6), 200.305(a). The State Department of Finance and Administration (DFA) may require additional supporting data and documents prior to disbursement of funds.

B. Reimbursement shall be based upon authorized and allowable expenditures consistent with the project narrative, grant guidelines, and timely submission of Financial and Performance Progress Reports. Reimbursement of expenditures shall be requested quarterly or monthly if need be for expenditures within the performance period. A minimum of 25% (of the total project cost) in the non-federal match must be included on each request for reimbursement. All expenditures must be supported with source documentation (e.g., copies of proof of payment, invoices, receipts, timesheets

with name/rate/hours and certified, breakdown of expenditures based on FEMA approved budget, warrants, a brief description of work done, required deliverables, etc.). Request for reimbursement will not be processed if quarterly financial or performance reports are delinquent. The final payment of 15% will not be made until DHSEM verifies that all activities are complete. All payments shall be made on an actual cost reimbursement basis.

C. Contracts: All requests for proposals/bids, sole–source procurements, single vendor responses to a competitive bid, and contracts require DHSEM pre–approval prior to implementation. The relevant contract must accompany requests for reimbursement for contractual services.

D. Local Match: Local matching funds must clearly support the source, the amount, and the timing of all matching contributions. When requesting reimbursement, the match percentage must be shown on each invoice. Copies of proof of payment, invoices, receipts, purchase orders, timesheets with name/wage/hours, cost allocation, general ledger, warrants, etc., must be submitted as a backup for the match.

E. Non-reimbursable Expenses:

- Transfer of funds between any programs. Contracts, single vendor response to a competitive bid, sole source contracts, and any procurement documentation not pre-approved by DHSEM.
- Training and related travel costs not pre-approved by DHSEM.
- Supplanting (using federal funds to purchase items previously budgeted for with state or local funds).
- Maintenance and/or wear and tear costs of general use vehicles and emergency response apparatus.
- Equipment purchased for an exercise cannot be used for permanent installation and/or beyond the scope of an exercise.
- Weapons and ammunition.
- Entertainment and sporting events
- Personal items such as laundry, personal hygiene items, magazines, in-room movies, personal travel, and personal phone calls.
- Travel insurance, visa, and passport charges.
- Lodging costs in excess of State per diem, as appropriate.
- Lunch when travel is wholly within a single day.
- Standalone working meals.
- Bar charges, alcoholic beverages.
- Finance, late fees, or interest charges.
- Lobbying, political contributions, and legislative liaison activities.
- Organized fundraising, including salaries of persons while engaged in these activities.
- Expenditures not supported with appropriate documentation when submitted for reimbursement. Only properly documented expenditures will be processed for payment. Unsupported expenditures will be returned to the jurisdiction for resubmission.

F. Payment Conditions. The sub-recipient must certify that in requesting and accepting a sub-grant payment, they have spent those funds on eligible expenditures; that the work performed was within the scope of work allowed for specific projects; and that all records pertinent to specific projects will be retained for at least the periods required under record retention regulation requirements from the closeout of the last project. The period of record retention for grant and financial data is three years if state funds are paid.

G. Delays and Denial of Payment. Reasons for delays in FEMA processing of payment requests include, but are not limited to, the following:

- Vendor identification number is missing or incorrect;
- Disaster and project number is missing;
- Period of performance (POP) listed is incorrect;
- Service delivery dates do not agree with invoices or outside of contract period;
- Dollar amount on forms do not agree;
- Mathematical errors;
- Full address of sub-grantee is not included;
- Sub-recipient did not provide required back-up documentation; or

Reasons for NMDHSEM declining payment requests include, but are not limited to, the following:

- The POP has expired;
- The amount exceeds the remaining funding available for disbursement prior to the final financial and program compliance reviews (the hold or funding retention amount);
- Request for payment requires a state and/or budget amendment, and cannot be processed until the amendment request is received/approved;
- The reimbursement requested is for an activity outside of the approved scope of work;
- Forms are not signed by an authorized person, or are signed by only one signatory;
- Reimbursement of awarded funds have been suspended due to a non-compliance issue such as failure to submit quarterly reports; or
- Reimbursements of awarded funds have been suspended due to noncompliance activities.

Sub-recipients can reduce the likelihood of delays in processing of payment requests by checking for accuracy prior to submission.

ARTICLE 3: AUDITING AND REPORTING REQUIREMENTS

A. Quarterly Reports. In accordance with 2 C.F.R. § 200.328, the Applicant shall submit quarterly reports to the NMDHSEM beginning with the first full quarter after the signature date on the Sub-recipient Grant Agreement. The NMDHSEM will provide sub-recipient a form for this report. Quarterly reports are due no later than the 15th of the month following the end of the quarter - January 15, April 15, July 15, and October 15.

In order that NMDHSEM may adequately evaluate the progress and status of each sub-grant, quarterly reports shall contain a description of the work accomplished to date, the methods and procedures used, the anticipated completion date, a summary of all project costs to date, and other such information as may be of assistance in its evaluation of the project.

Reports shall be sent to the Department of Homeland Security & Emergency Management, Recovery Unit, P.O. Box 27111, Santa Fe, NM 87502, or electronically to DHSEM.mitigation@dhsem.nm.gov.

B. Additional Reporting Requirements. The sub-recipient must immediately report in writing to the NMDHSEM Mitigation Unit any alleged acts or allegations of fraud or misappropriation of funds for work authorized under this Sub-recipient Grant Agreement. This extends to reporting any legal action, lawsuit, bankruptcy, or other action that may jeopardize the successful completion of any authorized project. Additional reporting and financial reconciliation requirements may also be requested at NMDHSEM and FEMA's request. Failure to comply with these requests may jeopardize funding and may be a breach of this Sub-recipient Grant Agreement.

C. Enforcement. The NMDHSEM may suspend drawdowns, impose other special conditions, or take other authorized action pursuant to 2 C.F.R. § 200.339 (Remedies for Noncompliance) if the sub-recipient does not submit accurate and timely reports. This may include, among other things, the

administrative closeout of a grant and/or any projects under a grant when the sub-recipient is not responsive to reasonable efforts NMDHSEM makes to collect required reports needed to complete closeout. Administrative closeout is a unilateral mechanism by NMDHSEM to move forward with project or grant closeout using available grant information in lieu of final reports. This can require NMDHSEM to make cash or cost adjustments and ineligible cost determinations, which may result in identifying a debt owed to FEMA and/or NMDHSEM.

D. Financial Procedures. The sub-recipient agrees to maintain financial procedures and support documents and to establish and maintain a proper accounting system to record expenditures of disaster assistance funds in accordance with generally accepted accounting principles or as directed by the Governor's Authorized Representative, to account for the receipt and expenditure of funds under this Agreement. If applicable, RECIPIENT / SUBGRANTEE shall conduct audit(s) pursuant to the Single Audit Act of 1984, 31 U.S.C. § 7501 et. seq., 44 C.F.R. Part 14, 2 C.F.R. Part 200, 0MB Circular A-133, "Audits of States, Local Governments, and Non-profit Organizations," and applicable New Mexico laws, rules and regulations. Further, sub-recipient must provide a hard copy of the Single Audit Report within sixty (60) days of the close of its fiscal year. Otherwise, pursuant to 44 C.F.R. § 13.43, NMDHSEM may withhold or suspend payments under any grant award.

The sub-recipient shall retain all financial records, supporting documents, statistical records, and any other documents pertinent to this contract for a period of five years after the date of submission of the final expenditures report. However, if litigation or an audit has been initiated prior to the expiration of the three-year period, the records shall be retained until the litigation or audit findings have been resolved.

E. Authorizing Statute. This award is made under the provisions of the Robert T. Stafford Disaster Relief and Emergency Assistance Act, Pub. L. No. 93-288 (1974) (codified as amended at 42 U.S.C. §§ 5121-5207) (Stafford Act), in accordance with 44 C.F.R. § 206.44.
All scopes of work and costs approved as a result of this Sub-recipient Grant Agreement, whether as estimates or final costs approved through subawards, PWs, or otherwise, will incorporate by reference the terms of this Sub-recipient Grant Agreement and must comply with applicable laws, regulations, policy, and guidance in accordance with this Sub-recipient Grant Agreement.

Pursuant to Executive Order 13858 Strengthening Buy-American Preferences for Infrastructure Projects, FEMA encourages recipients to use, to the greatest extent practicable and consistent with the law, iron and aluminum as well as steel, cement, and other manufactured products produced in the United States in Public Assistance and HMGP eligible public infrastructure repair and construction projects affecting surface transportation, ports, water resources including sewer and drinking water, and power. Such preference must be consistent with the law, including cost and contracting requirements at 2 C.F.R. Part 200.

F. Additional Terms and Conditions. The following additional sub-grant agreement documents are fully incorporated into this Sub-recipient Grant Agreement and thereby constitute additional terms and conditions of this agreement.

- The Stafford Act, its implementing regulations contained in Title 44 of the C.F.R., and FEMA policy and guidance.
- **Hazard Mitigation Assistance Guide (March 2023)**
- The Uniform Administrative Requirements, Cost Principles, and Audit Requirements for Federal Awards set forth at 2 C.F.R. Parts 200 and 3002.
- Attachment 1 United States Department of Homeland Security (USDHS) Standard Terms and Conditions (January 24, 2022) in effect on the date of the Declaration which are incorporated by reference into this Sub-recipient Grant Agreement

- Attachment 2 Reimbursement Checklist
- Attachment 3 Glossary and Definitions
- Attachment 4 Acronyms

ARTICLE 4: SCOPE OF WORK

A. As authorized by the Robert T. Stafford Disaster Relief and Emergency Assistance Act (the Stafford Act), as amended (42 U.S.C. § 5121 et seq.), and Section 662 of the Post Katrina Emergency Reform Act of 2006, as amended (6 U.S.C. § 762), the **City of Santa Fe** has been awarded funds for the Hazard Mitigation Plan Update and Wildlife Risk Assessment Project. Funds shall be utilized as outlined in the approved budget as awarded by FEMA on **July 23,2024**. The Sub Recipient shall match the Federal Award Amount of **$124,574.82** with a local jurisdictional amount of **$38,934.25** for a total project cost of **$163,509.07**. All work performed pursuant to this agreement must comply with the approved FEMA application. All work must be completed within the performance period, between **July23,2024 – November 14,2027.** The **City of Santa Fe** shall not sub-grant any part of this award to any other entity or organization. Within the first reporting quarter, all awards require confirmation that expenditures in the budget category toward this project will be made. If not, DHSEM may execute a de-obligation of Federal funds without recourse by the **City of Santa Fe.**

B. Approved projects must commence within the first reporting quarter. If a project cannot commence and be operational within the first reporting quarter of the approved award date, the sub–Recipient must submit a written statement to DHSEM, signed by the sub-recipient signatory officials, justifying the delay in implementation, the expected starting date, and a formal request to extend the project start date past the first reporting quarter. At the sole discretion of DHSEM, the grant award is subject to cancellation, and funds may be de-obligated and reallocated to other projects.

ARTICLE 5: PUBLICATIONS

A. Publications created with funding under this grant shall prominently contain the following statement or a DHSEM pre-approved modification: **This Document was prepared under a sub-grant from the FEDERAL EMERGENCY MANAGEMENT AGENCY, and the NEW MEXICO DEPARTMENT OF HOMELAND SECURITY AND EMERGENCY MANAGEMENT. Points of view or opinions expressed in this document are those of the authors and do not necessarily represent the official position or policies of the Federal Emergency Management Agency and the New Mexico Department of Homeland Security and Emergency Management.**

ARTICLE 6: PERFORMANCE PERIODS

The performance period for this sub-grant award is **July 23,2024 – November 14,2027.** Further, all personnel-related grant activity must be completed between **July 23,2024 – November 14,2027.** Funds may not be obligated outside of these time periods. An obligation occurs when funds are encumbered, as with a purchase order and/or commitment of salaries and benefits**. All obligated and encumbered funds *must be liquidated* within 45 days of the end of the performance period when the *Final Progress and Financial Reports* are due**.

ARTICLE 7: RECOVERY OF FUNDS FOR DUPLICATION OF BENEFITS AND INELIGIBLE ACTIVITIES

A. Ineligible Activities. The FEMA and/or NMDHSEM may disallow costs and recover funds based on the results of audit or review during or after performance of the award to ensure compliance with the terms of the Sub-recipient Grant Agreement and award document. The FEMA and/or NMDHSEM is required to recover funds when the sub-recipient has ineligible underruns (for example, actual costs for a PA large project are less than the amount awarded based on initial estimates); knowingly or negligently withholds

or misrepresents material information; fails to complete work and comply with the terms of this Sub-recipient Grant Agreement or the approved award; expends federal funds in error; or incurs costs that are unreasonable or otherwise disallowed. If, after exhaustion of appeal rights, FEMA and/or NMDHSEM determines a debt is owed, the State has 30 days to resolve the amount owed before the debt is referred to the FEMA Finance Center for collection. The State may do so by directly paying FEMA. The State may also deposit the amount owed directly into the applicable subaccount in U.S. Health and Human Services (HHS)/Smartlink and notify FEMA when it has reimbursed that subaccount, after which FEMA will de-obligate that amount in the subaccount. Alternatively, the sub-recipient may request to substitute unallowable costs for other costs that are allowable (e.g., necessary, allocable, and reasonable under the same award and have not yet been reimbursed by FEMA).

B. Duplication of Benefits. In accordance with the provisions of 42 U.S.C. § 5155 (Section 312 of the Stafford Act), duplication of benefits is prohibited. The NMDHSEM must take all actions necessary and reasonable to ensure that all who receive federal assistance are aware of their responsibility to repay federal assistance that is duplicated by amounts available from insurance or any other source for the same purpose. The FEMA and/or NMDHSEM may at any time, pre-award or post-award, adjust the level of funding provided to account for financial assistance provided from any other source for the same purpose as the federal assistance or to account for benefits available for the same purpose from another source, irrespective of whether they are actually received. The sub-recipient shall notify NMDHSEM, as soon as practicable, of the existence of any insurance coverage for the costs identified in the application and of any entitlement to or recovery of funds from any other source for the project costs, including Small Business Administration funding, United States Department of Agriculture (USDA), and other Federal, State, and private funding. The amount of duplicate sources available shall reduce allowable costs. The sub-recipient shall be liable to NMDHSEM to the extent that the sub-recipient receives duplicate benefits from any other source for the same purposes for which the sub-recipient has received payment from the NMDHSEM.

C. Cooperation. The NMDHSEM agrees, on its behalf and on behalf of its political subdivisions and others that receive federal assistance, to cooperate with the Federal Government in seeking recovery of federal assistance against any party or parties whose intentional acts or omissions or whose negligence or other tortious conduct may have caused or contributed to the damage or hardship for which federal assistance was provided under this Sub-recipient Grant Agreement. If applicable, FEMA will treat recovered funds as duplicated benefits available to NMDHSEM/sub-recipient in accordance with Section 312 of the Stafford Act (codified as amended at 42 U.S.C. § 5155).

D. NMDHSEM Responsibilities. The NMDHSEM is responsible for recovering federal assistance expended in error, misrepresentation, fraud, or for costs otherwise disallowed or unused.

a. The NMDHSEM must notify FEMA of any potential debt as a result of federal funds expended in error, misrepresentation, fraud, or for costs otherwise disallowed or unused.

b. The NMDHSEM must report all cases of suspected fraud to the USDHS Office of Inspector General. The NMDHSEM must cooperate with any investigation conducted by the USDHS Office of Inspector General. The NMDHSEM must cooperate with FEMA regarding any and all lawsuits that may result from the NMDHSEM or FEMA's attempt to recover funds or disallow costs.

E. Statute of Limitations. The 3-year statute of limitations limiting FEMA's ability to initiate an administrative action to recover funds paid as provided for in Section 705(a) of the Stafford Act (codified as amended at 42 U.S.C. § 5205(a)) begins with:

a. Initiation of an Administrative Action to Recover Payment. The initiation of an administrative action to recover payment includes FEMA's written notice to the NMDHSEM or a sub-recipient of a questioned or disallowed cost or improper payment (including a request for information

concerning such cost or payment) and written notice to the NMDHSEM or a sub-recipient of a FEMA or 3rd party review or audit.

F. Refunds, Rebates, and Credits. The NMDHSEM must transfer to FEMA the appropriate share, based on the federal support percentage, of any refund, rebate, credit or other amounts arising from the performance of this Sub-recipient Grant Agreement. The NMDHSEM must take necessary action to promptly collect all monies due or which may become due and if applicable, to cooperate with the Federal Government in any claim or suit in connection with amounts due.

G. Non-Compliant Sub-recipients. As per 2 C.F.R. §§ 200.207, 200.303(d) and 200.338(A-F), NMDHSEM can selectively use any or all the following remedies and prompt actions for non-compliance with any term of an award to include audit finding(s):

- **a.** Increased monitoring of projects and require additional financial and performance reports.
- **b.** Disallow advance payment process.
- **c.** Temporarily withhold payments pending correction of the deficiency.
- **d.** Disallow or deny use of funds and matching credit for all or part of the cost of the activity or action not in compliance.
- **e.** Request FEMA to completely or partially de-obligate funding for a project.
- **f.** Temporarily withhold payments pending correction of the deficiency by the sub-recipient.
- **g.** Withhold further awards for the grant program.
- **h.** Take other programmatic or legally available remedies.

ARTICLE 8: CONSTRUCTION REQUIREMENTS

A. The NMDHSEM must ensure that all applicable federal, state, and local permits and approvals are obtained, and all permit conditions are addressed before the start of any construction activity, including FEMA and NMDHSEM/sub-recipient compliance with the National Environmental Policy Act, the National Historic Preservation Act, the Endangered Species Act, and all other applicable environmental laws and executive orders. All construction should be in accordance with approved permits, projects plans and specifications, applicable building codes, and program guidance.

ARTICLE 9: NATIONAL ENVIRONMENTAL POLICY ACT (NEPA)/ENVIRONMENTAL PLANNING AND HISTORIC PRESERVATION (EHP) COMPLIANCE

A. The sub-recipient must provide information to FEMA the legally required environmental planning and historic preservation (EHP) review and to ensure compliance with the applicable EHP laws and Executive Orders (EO). These EHP requirements include but are not limited to National Environmental Policy Act, National Historic Preservation Act, Endangered Species Act, E 11988 Floodplain Management, EO 11990 Protection of Wetlands, and EO 12898 Environmental Justice. The sub-recipient must comply with all federal, state, local, tribal, and territorial EHP requirements and obtain applicable permits and clearances.

B. Sub-recipients shall not undertake any activity from the project that would result in ground disturbance, facility modification, or relates to the use of sonar equipment without the prior approval of FEMA. These include but are not limited to communications towers, physical security enhancements involving ground disturbance, new construction, and modifications to buildings that are 50 years old or older, and exercises. The sub-recipient must comply with all mitigation or treatment measures required for the project as the result of FEMA's EHP review. An EHP Screening Form does not need to be provided for those exercises that are planned to take place at previously approved facilities, such as, fire and police academies, search and rescue training facilities, and explosive testing centers. Any type of exercise that requires any type of land, water, or vegetation disturbance or building of temporary structures must undergo an EHP review.

C. Any change to an approved project description will require re-evaluation for compliance with EHP requirements before the project can proceed. If ground disturbing activities occur during project implementation, the sub-recipient must ensure monitoring of ground disturbance and if any potential archeological resources are discovered, the sub-recipient will immediately cease construction in that area and notify NMDHSEM, FEMA and the New Mexico Historic Preservation Division. Initiation of these activities prior to completion of FEMA's EHP review will result in a non-compliance finding and may result in ineligibility of grant funding.

ARTICLE 10: PROPERTY AND EQUIPMENT MANAGEMENT

A. The sub-recipient will follow the property standards articulated in 2 C.F.R. § 200.310 through 2 CFR 200.326. The sub-recipient shall, when practical, prominently display the following on any equipment purchased with award funds: **PURCHASED WITH FUNDS PROVIDED BY THE FEDERAL EMERGENCY MANAGEMENT AGENCY.** No equipment purchased with these grant funds may be assigned to other entities or organizations without the expressed approval in writing from DHSEM prior to the jurisdiction's encumbrance or expenditure for that equipment.

B. The subrecipient will follow the property standards articulated in 2 C.F.R. § 200.310 through 2 C.F.R. § 200.326. The subrecipient shall maintain an effective property management system; safeguards to prevent loss, damage or theft; maintenance procedures to keep equipment in good condition; and disposition procedures. A Property Inventory Report shall be submitted to NMDHSEM annually each January 30 with the Financial Progress Report during the performance period, and continued submission is required annually until final disposition of the equipment. The subrecipient shall, when practical, prominently display the following on any equipment purchased with award funds: Purchased with funds provided by the U.S. Department of Homeland Security. No equipment purchased with these grant funds may be assigned to other entities or organizations without the expressed approval in writing from NMDHSEM, prior to the jurisdiction's encumbrance or expenditure for that equipment.

C. Any disposition of property or equipment must be in accordance with 2 C.F.R. § 200.313(e) and pre-approved by FEMA through NMDHSEM.

ARTICLE 11: SUBRECIPIENT MONITORING POLICY

A. In accordance with 2 C.F.R. § 200.328, NMDHSEM may periodically monitor a sub-recipient's projects to ensure that program goals, objectives, timelines, budgets, and other related program criteria are being met. The NMDHSEM reserves the right to periodically review and conduct analysis of the sub-recipient's financial, programmatic, and administrative policies and procedures. This monitoring may include review of accounting for receipts and expenditures, cash management, maintaining adequate financial records, means of allocating and tracking costs, contracting, procurement, records management, payroll, means of allocating staff costs, property and equipment management system, progress of project activities, etc. This may include unscheduled desk audits and field inspections. The sub-recipient shall accommodate all such requests within reason. If the sub-recipient encounters any unanticipated problem with the Scope of Work, allowed costs, procurement, permitting, or other difficulty, the sub-recipient must communicate that problem to NMDHSEM promptly. Work on affected projects must be suspended until the problem is resolved. Technical assistance is available from NMDHSEM staff.

B. The sub-recipient will immediately, no later than 24-hours upon notice, report to NMDHSEM allegations of wrong-doing on the part of any contractor, sub-contractor, agent or employee of the sub-recipient, or other interested party in reference to the work authorized under this Sub-recipient Grant Agreement. This extends to any legal action, lawsuit, bankruptcy, or other action that may jeopardize the successful completion of any authorized project.

ARTICLE 12: PROCUREMENT

A. Procurement shall comply with all federal, state, and local procurement requirements including 2 C.F.R. § 200.320 and the New Mexico Procurement Code for expenditure of funds under this Agreement. The Applicant must conform to applicable state and federal law and the Procurement Standards Sections 2 C.F.R. § 200.317-326, and Appendix II. Contractors that develop or draft specifications, requirements, Statements of Work, and/or Requests for Proposals (RFP) for a proposed procurement shall be excluded from bidding or submitting a proposal to compete for the award of such procurement. Local bidder's preference is not allowed for federally funded procurements. Procurement transactions shall be conducted to provide maximum open and free competition.

B. When procuring property and services under this agreement, the sub-recipient will follow 2 C.F.R. § 200.318 through 2 C.F.R. § 200.326 and Appendix II. The sub-recipient must use its own documented procurement procedures which reflect applicable state, local, tribal, and territorial laws, and regulations, provided that the procurements conform to applicable federal law and the standards identified in 2 C.F.R. § 200. As such, the sub-recipient must use one of the methods of procurement identified in 2 C.F.R. § 200.320.

C. Also, per 2 C.F.R. § 200.318(i), subrecipients are required to maintain and retain records sufficient to detail the history of procurement covering at least the rationale for the procurement method, selection of contract type, contractor selection or rejection, and the basis for the contract price. States and territories are encouraged to maintain and retain this information as well and are reminded that in order for any cost to be allowable, it must be adequately documented per 2 C.F.R. § 200.403(g). Examples of the types of documents that would cover this information include but are not limited to:

- **a.** Solicitation documentation, such as requests for quotes, invitations for bids, or requests for proposals;
- **b.** Responses to solicitations, such as quotes, bids, or proposals;
- **c.** Pre-solicitation independent cost estimates and post-solicitation cost/price analyses on file for review by federal personnel, if applicable;
- **d.** Contract documents and amendments, including required contract provisions; and
- **e.** Other documents required by federal regulations applicable at the time a subgrant is awarded to a subrecipient.

D. Procurement from Minority Owned and Women Owned Business is encouraged and must be tracked and reported to NMDHSEM on the quarterly reports. Procurement transactions shall be conducted to provide maximum open and free competition. Each sole–source procurement single vendor response to a competitive bid, and all purchases require prior approval of NMDHSEM.

E. The sub-recipient will follow the property standards articulated in 2 C.F.R. § 200.310 through 2 C.F.R. § 200.326. The sub-recipient shall maintain an effective property management system; safeguards to prevent loss, damage or theft; maintenance procedures to keep equipment in good condition; and disposition procedures. Property and equipment records shall be maintained for a period of three years following the final disposition, replacement or transfer of the property and equipment.

ARTICLE 13: CONTRACTS

A. Contractors that develop or draft specifications, requirements, Statements of Work, and/or Requests for Proposals (RFP) for a proposed procurement shall be excluded from bidding or submitting a proposal to compete for the award of such procurement. Local bidder's preference is not allowed for federally funded procurements. Procurement transactions shall be conducted to provide maximum open and free

competition. Each sole–source procurement, single vendor response to a competitive bid, and all purchases require prior approval of DHSEM.

B. Any contract shall comply with the requirements of Procurement Standards Sections of 28 C.F.R. Parts 66 and 70, 2 C.F.R. Part 200 and OMB Circulars A–102 "Uniform Administrative Requirements for Grants and Cooperative Agreements with State and Local Governments" for expenditure of Federal funds under this Sub-recipient Grant Agreement. Applicants shall submit procurement and contracts to NMDHSEM for review prior to approval. Contracts for professional services must meet applicable local, state, and federal requirements. All contractors must be licensed in New Mexico for the type of work that is required. Prior to any contracted work beginning, the sub-recipient shall provide NMDHSEM with a copy of the contractor's license. Contract work must not exceed the scope of work and PW awarded amount prescribed by FEMA, unless requested through a scope of work change and approval from FEMA.

C. Any contract entered during this sub-grant period shall comply with local, State, and Federal government contracting regulations. Professional and consultant services contracts must include local, State, and Federal government-required contract language, a project budget, SOW, and a pay schedule. ***All contracts require pre-approval by DHSEM prior to execution.*** Contract deliverables must meet the intent of the grant application and grant requirements. Justification is required for compensation for individual consultant services, which must be reasonable and consistent with the amount paid for similar services in the marketplace. Detailed invoices and time and effort reports are required for consultants.

ARTICLE 14: COMPETITION AND CONFLICTS OF INTEREST

A. Among the requirements of 2 C.F.R. § 200.319(b) applicable to all non-federal entities other than states, in order to ensure objective contractor performance and eliminate unfair competitive advantage, contractors that develop or draft specifications, requirements, statements of work, or invitations for bids or requests for proposals must be excluded from competing for such procurements. The FEMA considers these actions to be an organizational conflict of interest and interprets this restriction as applying to contractors that help a subrecipient develop its grant application, project plans or project budget. This prohibition also applies to the use of former employees to manage the grant or carry out a contract when those former employees worked on such activities while they were employees of the non-federal entity.

B. Under this prohibition, unless the subrecipient solicits for and awards a contract covering both development and execution of specifications (or similar elements as described above), and this contract was procured in compliance with 2 C.F.R. §§ 200.317 – 200.327, federal funds cannot be used to pay a contractor to carry out the work if that contractor also worked on the development of those specifications. This rule applies to all contracts funded with federal grant funds, including pre-award costs, such as grant writer fees, as well as post-award costs, such as grant management fees. Additionally, some of the situations considered to be restrictive of competition include, but are not limited to:

- **a.** Placing unreasonable requirements on firms for them to qualify to do business;
- **b.** Requiring unnecessary experience and excessive bonding;
- **c.** Noncompetitive pricing practices between firms or between affiliated companies;
- **d.** Noncompetitive contracts to consultants that are on retainer contracts;
- **e.** Organizational conflicts of interest;
- **f.** Specifying only a "brand name" product instead of allowing "an equal" product to be offered and describing the performance or other relevant requirements of the procurement; and
- **g.** Any arbitrary action in the procurement process.

C. Per 2 C.F.R. § 200.319(c), the subrecipient must conduct procurements in a manner that prohibits the use of statutorily or administratively imposed state, local, tribal, or territorial geographical preferences in the evaluation of bids or proposals, except in those cases where applicable federal statutes expressly mandate or encourage geographic preference. Nothing in this section preempts state licensing laws. **When**

contracting for architectural and engineering services, geographic location may be a selection criterion, provided its application leaves an appropriate number of qualified firms, given the nature and size of the project, to compete for the contract.

D. Under 2 C.F.R. § 200.318(c)(1), the subrecipient is required to maintain written standards of conduct covering conflicts of interest and governing the actions of their employees engaged in the selection, award, and administration of contracts. **No employee, officer, or agent may participate in the selection, award, or administration of a contract supported by a federal award if he or she has a real or apparent conflict of interest.** Such conflicts of interest would arise when the employee, officer or agent, any member of his or her immediate family, his or her partner, or an organization that employs or is about to employ any of the parties indicated herein, has a financial or other interest in or a tangible personal benefit from a firm considered for a contract. The non-federal entity's officers, employees, and agents may neither solicit nor accept gratuities, favors, or anything of monetary value from contractors or parties to subcontracts. However, subrecipient entities may set standards for situations in which the financial interest is not substantial, or the gift is an unsolicited item of nominal value. The standards of conduct must provide for disciplinary actions to be applied for violations of such standards by officers, employees, or agents of the non-federal entity.

E. Under 2 C.F.R. § 200.318(c)(2), if the subrecipient has a parent, affiliate, or subsidiary organization that is not a state, local, tribal or territorial government, the subrecipient must also maintain written standards of conduct covering organizational conflicts of interest. In this context, organizational conflict of interest means that because of a relationship with a parent company, affiliate, or subsidiary organization, the subrecipient is unable or appears to be unable to be impartial in conducting a procurement action involving a related organization. The non-federal entity must disclose in writing any potential conflicts of interest to FEMA or NMDHSEM in accordance with applicable FEMA policy.

ARTICLE 15: CONTRACTS

A. Contracts for professional and consultant services executed during this grant period must include federal, state, local, tribal, and territorial government required contract language, a project budget, and require pre-approval by NMDHSEM prior to implementation. Contract deliverables must meet the intent of the grant application and grant requirements. Justification is required for compensation for individual consultant services, which must be reasonable and consistent with the amount paid for similar services in the marketplace. Detailed invoices and time and effort reports are required for consultants. *See* 2 C.F.R. § 200.1, 2 C.F.R. § 200 Appendix II to Part 200.

ARTICLE 16: AUDIT REQUIREMENTS

A. As a federal grant recipient, the State of New Mexico requires a sub-recipient expending $750,000 or more in federal funds in the organization's fiscal year to conduct an organization–wide audit in accordance with the Single Audit described in 2 C.F.R. § 200.501. The sub-recipient will permit state or federal officials and auditors to have access to sub-recipient and contractor records and financial statements as necessary for the state to comply with 2 C.F.R. § 200.501. Copies of audit findings must be submitted to NMDHSEM within 30 days after the sub-recipient receives its audit report, or within a 9-month period of the grant closeout date, whichever is earlier. Include the federal agency name, program, grant number, the CFDA title and number, and the name of the pass-through agency (NMDHSEM) in all documents.

ARTICLE 17: RECORDS RETENTION

A. Records Retention.

a. **State Requirement.** The State must retain records for three years after all projects are complete and the federal disaster is formally closed out, except in certain rare circumstances described in 2 C.F.R. § 200.334 (Retention requirements for records), from the date it submits the final Federal Financial Report (SF-425) to FEMA in compliance with 2 C.F.R. § 200.334. If FEMA administratively closes the grant where no final SF-425 was submitted, FEMA uses the date the grant was administratively closed as the start date for the three-year record retention period.

b. **Sub-recipient Requirement.** The sub-recipients must retain project or subaward records for at least three years from the date that the NMDHSEM submits to FEMA the final expenditure report for a project or subaward. If, however, there is any litigation, claim, negotiation, audit, request for information, or other action involving the project or subaward that starts before that date, the records must be retained until completion of the action and resolution of all issues which arise from it, or until the end of the three-year period, whichever is later.

c. The sub-recipient will follow the record retention and access standards articulated in 2 C.F.R. § 200.333 through 2 C.F.R. § 200.337. The grant financial and administrative records shall be maintained for a period of three years following the date of the closure of the grant award, or audit if required. Time and effort, personnel and payroll records for all individuals reimbursed under the award must be maintained. Property and equipment records shall be maintained for a period of three years following the final disposition, replacement or transfer of the property and equipment.

d. The sub-recipient will be required to maintain project records until the expiration of the appropriate retention period. This includes records related to Management Costs, procurement, contracting, accounts payable, engineering, inventory, force account (materials, labor, and equipment), insurance settlements or other records related to the project scope of work. Retention procedures are outlined in the Hazard Mitigation Assistance Grant Programs Administrative Plan.

ARTICLE 18: CHANGES TO AWARD

A. All change requests must be submitted either in writing or electronically to the NMDHSEM contact for review 90 days prior to the termination of this Sub-recipient Grant Agreement. All change requests must be accompanied by a justification narrative and a budget and spending plan. All change requests must be consistent with the scope of the project and grant guidelines. Change requests will be considered only if reporting requirements are current, and all other terms and conditions of this Sub-recipient Grant Agreement have otherwise been met at the time of the request. If approved by NMDHSEM and FEMA, changes in the programmatic activities, purpose of the project, key personnel specified on the grant award, contractual services for activities central to the purposes of the award, change in project site, or release of special conditions, will result in an amendment to this award. Requests for changes must be formally submitted to NMDHSEM and FEMA.

B. Changes to this Sub-recipient Grant Agreement will be made via a Sub-recipient Grant Agreement Amendment. The NMDHSEM will prepare each Amendment when needed. No Sub-recipient Grant Agreement Amendment is valid until fully executed.

ARTICLE 19: REMEDIES FOR NONCOMPLIANCE

A. For the reasons listed below, special conditions may be imposed, reimbursements may be partially or wholly withheld, the award may be wholly or partly suspended or terminated, or future awards, reimbursements and award modifications may be withheld. The NMDHSEM may institute the following, but is not limited to, withholding authority to proceed to the next phase of a project, requiring additional or more detailed

financial reports, additional project monitoring, and/or establish additional prior approvals. The NMDHSEM shall notify the sub-recipient of its decision in writing stating the nature and the reason for imposing the conditions/restrictions, the corrective action required and timeline to remove them, and the method of requesting reconsideration of the imposed conditions/restrictions. The sub-recipient must respond within five days of receipt of notification.

a. Unwillingness or inability to attain project goals or scope of work.
b. Unwillingness or inability to adhere to Special Conditions of this Sub-recipient Grant Agreement.
c. Failure or inability to adhere to grant guidelines and federal compliance requirements.
d. Improper procedures regarding contracts and procurements.
e. Failure to submit reliable and/or timely reports.
f. Fiscal management which does not meet reasonable professional standards.
g. Failure or inability to adhere to the terms and conditions of this Sub-recipient Grant Agreement.
h. Unwillingness or inability to obtain permits required by law to perform the eligible work.
i. Noncompliance with any and all federal, state, local and tribal grant requirements.

B. The NMDHSEM shall notify the sub-recipient of any non-compliance issues in writing and shall attempt to arrive at a resolution in a timely and reasonable fashion. If corrective action is required, NMDHSEM and the sub-recipient shall determine a timeline and landmarks for remediation. The NMDHSEM may require additional detailed financial reports or additional project monitoring. The ultimate penalty for non-compliance with the terms and conditions of this Sub-recipient Grant Agreement is for payments to be withheld or for the award to be suspended or terminated. The sub-recipient agrees to make restitution if necessary.

C. The NMDHSEM may take action as it determines appropriate under the circumstances including but not limited to withholding of payments, disallowance of costs, suspension or termination of the award if the sub-recipient fails to comply with applicable Federal and State statutes, regulations, or the terms of this Sub-recipient Grant Agreement pursuant to 2 C.F.R. § 200.339.

D. Nothing in this section abrogates the sub-recipient's right of appeal.

ARTICLE 20: TERMINATION

A. **For Cause:** In compliance with 2 C.F.R. § Part 200.340(a)(1), if performance is not occurring as agreed, the award may be reduced or terminated without compensation for reduction or termination costs. The NMDHSEM will provide notice of five days to the subrecipient stating the reasons for the action, steps taken to correct the problems, and the commencement date of the reduction or termination. The NMDHSEM will reimburse the subrecipient only for acceptable work or deliverables, necessary and allowable costs incurred through the date of reduction or termination. Final payment may be withheld at the discretion of NMDHSEM until completion of a final NMDHSEM review. Disposition of any equipment acquired under a terminated grant must be in accordance with 2 C.F.R. § 200.313(e).

B. **For Convenience:** In compliance with 2 CFR Part 200.340(a)(4), this Agreement may be terminated without cause by the subrecipient upon written notice setting forth the reasons for such termination, and the effective date at least 30 days prior to the intended date of termination. A termination pursuant to this provision does not nullify a party's obligations for performance, or liabilities for failure to perform already incurred prior to the date of termination. Any project may be terminated upon convenience, in whole or in part, for the convenience of the subrecipient; though a partial termination notification must specify that portion of the project which is to be terminated. Allowable costs obligated and/or incurred through the date of termination shall be reimbursed. Disposition of any equipment acquired under a terminated grant must be in accordance with 2 C.F.R. § 200.313(e).

ARTICLE 21: CLOSEOUT OF SUB-GRANT

A. Closeout of Projects. Per 2 C.F.R. § 200.344, sub-recipients must submit all cost and supporting documentation for completed projects. The NMDHSEM will review and verify all costs and supporting documents to validate compliance. Failure to comply will result in de-obligation of the project. The NMDHSEM will close each sub-recipient file once it has conducted full review and approval of all supporting documents for compliance and all projects are completed and has project activity closed out.

a. Management Costs. Management Costs will be used for internal staff salaries, contractor payments and other support costs associated with this grant. This will be in accordance with all laws, rules, and FEMA regulations. Management Costs will be processed in accordance with the Hazard Mitigation Assistance Program and Policy Guide.

The NMDHSEM commits to closeout of all grants regardless of the availability of management costs.

ARTICLE 22: SPECIAL CONDITIONS

A. The terms of this Sub-recipient Grant Agreement are contingent upon sufficient appropriations and authorizations being made by the USDHS FEMA under the Robert T. Stafford Disaster Relief and Emergency Assistance Act U.S.C. §§ 5121-5207. If sufficient appropriations and authorizations are not made by FEMA this Sub-recipient Grant Agreement shall terminate immediately upon written notice being given by NMDHSEM to the sub-recipient. The decision of NMDHSEM shall be final.

B. If NMDHSEM proposes an Amendment to the Sub-recipient Grant Agreement to unilaterally reduce funding, the sub-recipient shall have the option to terminate the Sub-recipient Grant Agreement or agree to the reduced funding within 30 days of receipt of the proposed Amendment.

C. Each party shall be solely responsible for fiscal or other sanctions occasioned because of its own violation of requirements applicable to the performance of this Sub-recipient Grant Agreement. Each party shall be liable for its own actions or inactions in accordance with state law and nothing herein shall be deemed a waiver, indemnity or to otherwise create or effect liabilities between the parties.

D. The grant award amount is a funding allocation and is not to be interpreted as expenditure authorizations or approvals.

E. All awarded projects must be planned for, conducted, budgeted, and expended within the designated performance period.

F. Quarterly financial and progress reports are due on October 15, January 15, April 15, and July 15, within the POP. Final reports are due 15 days after the end of POP.

G. All revision requests must be reviewed and approved by NMDHSEM staff. All requests must meet the original scope of the project which may result in a sub-recipient grant amendment.

H. A revision of a project's SOW must be pre-approved by NMDHSEM staff before the jurisdiction can proceed with the request for approval process. If the revision is approved, NMDHSEM staff may request additional documentation to proceed with recommendation to NMDHSEM Leadership for final approval.

I. The beneficiary of this award is solely responsible for all expenditures that are incurred outside of the award performance period. All expenditures that are incurred above and beyond the amount of this Sub-recipient Grant Agreement are the sole responsibility of the sub-recipient of this award.

J. Procurement from Minority Owned and Women Owned Business is encouraged and must be tracked and reported to NMDHSEM on the quarterly reports.

K. Upon completion of all awarded projects, any remaining funds will be de-obligated and reverted to NMDHSEM for return to FEMA.

L. Extensions due to exigent or emergency circumstances will be determined by NMDHSEM on a case-by-case basis.

State of New Mexico
Department of Homeland Security & Emergency Management
P.O. Box 27111
Santa Fe, NM 87502

The acceptance of a subgrant from the United States and the State of New Mexico creates a legal duty and obligation on the part of the sub-recipient to use the funds or property made available in accordance with the conditions of the grant as administered by and through the New Mexico Department of Homeland Security and Emergency Management. By signing this obligating award document, the sub-recipient certifies it has read, understood, and accepted these documents as binding.

SUB-RECIPIENT GRANT AGREEMENT
Signatures of Acceptance

SUB-GRANT NO:	**DR-4652-0011-NM**		
JURISDICTION GRANT PROGRAM MANAGER PRINTED NAME:			
OFFICIAL SIGNATURE:		**DATE:**	
CONTACT NUMBER:		**E-MAIL ADDRESS:**	
JURISDICTION CHIEF FINANCIAL OFFICER PRINTED NAME:			
OFFICIAL SIGNATURE:		**Date:**	
CONTACT NUMBER:		**E-MAIL ADDRESS:**	
JURISDICTION SIGNATORY OFFICIAL PRINTED NAME:			
OFFICIAL SIGNATURE:		**DATE:**	
CONTACT NUMBER:		**E-MAIL ADDRESS:**	
NMDHSEM MITIGATION PROGRAM BUREAU CHIEF PRINTED NAME:			
NMDHSEM MITIGATION PROGRAM BUREAU CHIEF OFFICIAL SIGNATURE / DATE:			
NMDHSEM GRANTS MANAGEMENT BUREAU CHIEF PRINTED NAME:			
NMDHSEM GRANTS MANAGEMENT BUREAU CHIEF OFFICIAL SIGNATURE / DATE:			
NMDHSEM DEPUTY CABINET SECRETARY OFFICIAL PRINTED NAME:			
NMDHSEM DEPUTY CABINET SECRETARY OFFICIAL SIGNATURE / DATE:			

Print one original agreement, sign and email to: DHSEM.MITIGATION@DHSEM.nm.gov

CITY OF SANTA FE:

_____
ALAN WEBBER, MAYOR

DATE:_____

ATTEST:

_____
CITY CLERK

CITY ATTORNEY'S OFFICE:

_____
ASSISTANT CITY ATTORNEY

APPROVED FOR FINANCES:

Emily K. Oster 11/01/2024
_____
FINANCE DIRECTOR

The page is intentionally left blank.

ATTACHMENT 1
USDHS Standard Terms and Conditions
(January 24, 2022)

The Fiscal Year (FY) 2022 USDHS Standard Terms and Conditions apply to all new federal financial assistance awards funded in FY 2022. These terms and conditions flow down to sub-recipients unless an award term or condition specifically indicates otherwise. The United States has the right to seek judicial enforcement of these obligations.

All legislation and digital resources are referenced with no digital links. The FY 2022 USDHS Standard Terms and Conditions will be housed on dhs.gov at www.dhs.gov/publication/fy15-dhs- standard-terms-and-conditions.

A. Assurances, Administrative Requirements, Cost Principles, Representations and Certifications

I. USDHS financial assistance recipients must complete either the Office of Management and Budget (OMB) Standard Form 424B Assurances – Non-Construction Programs, or OMB Standard Form 424D Assurances – Construction Programs, as applicable. Certain assurances in these documents may not be applicable to your program, and the USDHS financial assistance office (USDHS FAO) may require applicants to certify additional assurances. Applicants are required to fill out the assurances as instructed by the awarding agency.

II. USDHS financial assistance recipients are required to follow the applicable provisions of the Uniform Administrative Requirements, Cost Principles, and Audit Requirements for Federal Awards located at Title 2, Code of Federal Regulations (C.F.R.) Part 200 and adopted by USDHS at 2 C.F.R. Part 3002.

III. By accepting this Agreement, recipients, and their executives, as defined in 2 C.F.R. § 170.315, certify that their policies are in accordance with OMB's guidance located at 2 C.F.R. Part 200, all applicable federal laws, and relevant Executive guidance.

B. General Acknowledgements and Assurances

All recipients, sub-recipients, successors, transferees, and assignees must acknowledge and agree to comply with applicable provisions governing USDHS access to records, accounts, documents, information, facilities, and staff.

I. Recipients must cooperate with any USDHS compliance reviews or compliance investigations conducted by USDHS.

II. Recipients must give USDHS access to examine and copy records, accounts, and other documents and sources of information related to the federal financial assistance award and permit access to facilities or personnel.

III. Recipients must submit timely, complete, and accurate reports to the appropriate USDHS officials and maintain appropriate backup documentation to support the reports.

IV. Recipients must comply with all other special reporting, data collection, and evaluation requirements, as prescribed by law, or detailed in program guidance.

V. Recipients (as defined in 2 C.F.R. Part 200 and including recipients acting as pass-through entities) of federal financial assistance from USDHS or one of its awarding component agencies must complete the USDHS Civil Rights Evaluation Tool within thirty (30) days of receipt of the Notice of Award for the first award under which this term applies. Recipients of multiple awards of USDHS financial assistance should only submit one completed tool for their organization, not per award. After the initial submission, recipients are required to complete the tool once every two (2) years if they have an active award, not every time an award is made. Recipients should submit the completed tool, including supporting materials, to CivilRightsEvaluation@hq.dhs.gov. This tool clarifies the civil rights obligations and related reporting requirements contained in the USDHS

Standard Terms and Conditions. Sub-recipients are not required to complete and submit this tool to USDHS. The evaluation tool can be found at https://www.dhs.gov/publication/dhs- civil-rights-evaluation-tool.

The USDHS Office for Civil Rights and Civil Liberties will consider, in its discretion, granting an extension if the recipient identifies steps and a timeline for completing the tool. Recipients should request extensions by emailing the request to CivilRightsEvaluation@hq.dhs.gov prior to expiration of the 30-day deadline.

C. Standard Terms & Conditions

I. Acknowledgement of Federal Funding from USDHS

Recipients must acknowledge their use of federal funding when issuing statements, press releases, requests for proposal, bid invitations, and other documents describing projects or programs funded in whole or in part with federal funds.

II. Activities Conducted Abroad

Recipients must ensure that project activities performed outside the United States are coordinated as necessary with appropriate government authorities and that appropriate licenses, permits, or approvals are obtained.

III. Age Discrimination Act of 1975

Recipients must comply with the requirements of the Age Discrimination Act of 1975, Public Law 94-135 (1975) (codified as amended at Title 42, U.S. Code, § 6101 et seq.), which prohibits discrimination on the basis of age in any program or activity receiving federal financial assistance.

IV. Americans with Disabilities Act of 1990

Recipients must comply with the requirements of Titles I, II, and III of the Americans with Disabilities Act, Pub. L. 101-336 (1990) (codified as amended at 42 U.S.C. §§ 12101– 12213), which prohibits recipients from discriminating on the basis of disability in the operation of public entities, public and private transportation systems, places of public accommodation, and certain testing entities.

V. Best Practices for Collection and Use of Personally Identifiable Information

Recipients who collect personally identifiable information (PII) are required to have a publicly available privacy policy that describes standards on the usage and maintenance of the PII they collect. USDHS defines PII as any information that permits the identity of an individual to be directly or indirectly inferred, including any information that is linked or linkable to that individual. Recipients may also find the USDHS Privacy Impact Assessments: Privacy Guidance and Privacy Template as useful resources respectively.

VI. Civil Rights Act of 1964 – Title VI

Recipients must comply with the requirements of Title VI of the Civil Rights Act of 1964 (codified as amended at 42 U.S.C. § 2000d et seq.), which provides that no person in the United States will, on the grounds of race, color, or national origin, be excluded from participation in, be denied the benefits of, or be subjected to discrimination under any program or activity receiving federal financial assistance. USDHS implementing regulations for the Act are found at 6 C.F.R. Part 21 and 44 C.F.R. Part 7.

VII. Civil Rights Act of 1968

Recipients must comply with Title VIII of the Civil Rights Act of 1968, Pub. L. 90-284, as amended through Pub. L. 113-4, which prohibits recipients from discriminating in the sale, rental, financing, and advertising of dwellings, or in the provision of services in connection therewith, on the basis of race, color, national origin, religion, disability, familial status, and sex (see 42 U.S.C. § 3601 et seq.), as implemented by the U.S. Department of Housing and Urban Development at 24 C.F.R. Part 100. The prohibition on disability discrimination includes the requirement that new multifamily housing with four or more dwelling units—i.e., the public and common use areas and individual apartment units (all units in buildings with elevators and ground-floor units in buildings without elevators)—be designed and constructed with certain accessible features. (See 24 C.F.R. Part 100, Subpart D.)

VIII. Copyright

Recipients must affix the applicable copyright notices of 17 U.S.C. §§ 401 or 402 and an acknowledgement of U.S. Government sponsorship (including the award number) to any work first produced under federal financial assistance awards.

IX. Debarment and Suspension

Recipients are subject to the non-procurement debarment and suspension regulations implementing Executive Orders (E.O.) 12549 and 12689, which are at 2 C.F.R. Part 180 as adopted by USDHS at 2 C.F.R. Part 3002. These regulations restrict federal financial assistance awards, subawards, and contracts with certain parties that are debarred, suspended, or otherwise excluded from or ineligible for participation in federal assistance programs or activities.

X. Drug-Free Workplace Regulations

Recipients must comply with drug-free workplace requirements in Subpart B (or Subpart C, if the recipient is an individual) of 2 C.F.R. Part 3001, which adopts the Government-wide implementation (2 C.F.R. Part 182) of Sec. 5152-5158 of the Drug-Free Workplace Act of 1988 (41 U.S.C. §§ 8101-8106).

XI. Duplication of Benefits

Any cost allocable to a particular federal financial assistance award provided for in 2 C.F.R. Part 200, Subpart E may not be charged to other federal financial assistance awards to overcome fund deficiencies; to avoid restrictions imposed by federal statutes, regulations, or federal financial assistance award terms and conditions; or for other reasons. However, these prohibitions would not preclude recipients from shifting costs that are allowable under two or more awards in accordance with existing federal statutes, regulations, or the federal financial assistance award terms and conditions may not be charged to other federal financial assistance awards to overcome fund deficiencies; to avoid restrictions imposed by federal statutes, regulations, or federal financial assistance award terms and conditions; or for other reasons.

XII. Education Amendments of 1972 (Equal Opportunity in Education Act) – Title IX

Recipients must comply with the requirements of Title IX of the Education Amendments of 1972, Pub. L. 92-318 (1972) (codified as amended at 20 U.S.C. § 1681 et seq.), which provide that no person in the United States will, on the basis of sex, be excluded from participation in, be denied the benefits of, or be subjected to discrimination under any educational program or activity receiving federal financial assistance. USDHS implementing regulations are codified at 6 C.F.R. Part 17 and 44 C.F.R. Part 19.

XIII. Energy Policy and Conservation Act

Recipients must comply with the requirements of the Energy Policy and Conservation Act, Pub. L. 94- 163 (1975) (codified as amended at 42 U.S.C. § 6201 et seq.), which contain policies relating to energy efficiency that are defined in the state energy conservation plan issued in compliance with this Act.

XIV. Ensuring the Future is Made in All of America by All of America's Workers

Recipients must comply with the "Build America, Buy America" provisions of the Infrastructure Investment and Jobs Act and E.O. 14005 which provide that, as appropriate and to the extent consistent with law, the recipient must use all practicable means within their authority under a federal award to provide a preference for the purchase, acquisition, or use of goods, products, or materials produced in the United States (including but not limited to iron, aluminum, steel, cement, and other manufactured products.)

XV. False Claims Act and Program Fraud Civil Remedies

Recipients must comply with the requirements of the False Claims Act, 31 U.S.C. §§3729- 3733, which prohibit the submission of false or fraudulent claims for payment to the Federal Government. (See 31 U.S.C. §§ 3801-3812, which details the administrative remedies for false claims and statements made.)

XVI. Federal Debt Status

All recipients are required to be non-delinquent in their repayment of any federal debt. Examples of relevant debt include delinquent payroll and other taxes, audit disallowances, and benefit overpayments. (See OMB Circular A-129.)

XVII. Federal Leadership on Reducing Text Messaging while Driving

Recipients are encouraged to adopt and enforce policies that ban text messaging while driving as described in E.O. 13513, including conducting initiatives described in Section 3(a) of the Order when on official government business or when performing any work for or on behalf of the Federal Government.

XVIII. Fly America Act of 1974

Recipients must comply with Preference for U.S. Flag Air Carriers (air carriers holding certificates under 49 U.S.C.) for international air transportation of people and property to the extent that such service is available, in accordance with the International Air Transportation Fair Competitive Practices Act of 1974, 49 U.S.C. § 40118, and the interpretative guidelines issued by the Comptroller General of the United States in the March 31, 1981, amendment to Comptroller General Decision B-138942.

XIX. Hotel and Motel Fire Safety Act of 1990

Recipients must ensure that all conference, meeting, convention, or training space funded in whole or in part with federal funds complies with the fire prevention and control guidelines of Section 6 of the Hotel and Motel Fire Safety Act of 1990, 15 U.S.C. § 2225a.

XX. John S. McCain National Defense Authorization Act of Fiscal Year 2019

Recipients, sub-recipients, and their contractors and subcontractors are subject to the prohibitions described in section 889 of the John S. McCain National Defense Authorization Act for Fiscal Year 2019, Pub. L. No. 115-232 (2018) and 2 C.F.R. §§ 200.216, 200.327, 200.471, and Appendix II to 2 C.F.R. Part 200. Beginning August 13, 2020, the statute – as it applies to USDHS recipients, sub-recipients, and their contractors and subcontractors – prohibits obligating or expending federal award funds on certain telecommunications and video surveillance products

and contracting with certain entities for national security reasons.

XXI. Limited English Proficiency (Civil Rights Act of 1964, Title VI)

Recipients must comply with Title VI of the Civil Rights Act of 1964, (42 U.S.C. § 2000d et seq.) prohibition against discrimination on the basis of national origin, which requires that recipients of federal financial assistance take reasonable steps to provide meaningful access to persons with limited English proficiency (LEP) to their programs and services. For additional assistance and information regarding language access obligations, please refer to the USDHS Recipient Guidance: https://www.dhs.gov/guidance- published-help- department- supported-organizations-provide-meaningful-access-people-limited and additional resources on http://www.lep.gov.

XXII. Lobbying Prohibitions

Recipients must comply with 31 U.S.C. § 1352, which provides that none of the funds provided under a federal financial assistance award may be expended by the recipient to pay any person to influence, or attempt to influence an officer or employee of any agency, a Member of Congress, an officer or employee of Congress, or an employee of a Member of Congress in connection with any federal action related to a federal award or contract, including any extension, continuation, renewal, amendment, or modification.

XXIII. National Environmental Policy Act

Recipients must comply with the requirements of the National Environmental Policy Act of 1969, (NEPA) Pub. L. 91-190 (1970) (codified as amended at 42 U.S.C. § 4321 et seq. and the Council on Environmental Quality (CEQ) Regulations for Implementing the Procedural Provisions of NEPA, which require recipients to use all practicable means within their authority, and consistent with other essential considerations of national policy, to create and maintain conditions under which people and nature can exist in productive harmony and fulfill the social, economic, and other needs of present and future generations of Americans.

XXIV. Nondiscrimination in Matters Pertaining to Faith-Based Organizations

It is USDHS policy to ensure the equal treatment of faith-based organizations in social service programs administered or supported by USDHS or its component agencies, enabling those organizations to participate in providing important social services to beneficiaries. Recipients must comply with the equal treatment policies and requirements contained in 6 C.F.R. Part 19 and other applicable statues, regulations, and guidance governing the participations of faith-based organizations in individual USDHS programs.

XXV. Non-Supplanting Requirement

Recipients receiving federal financial assistance awards made under programs that prohibit supplanting by law must ensure that federal funds do not replace (supplant) funds that have been budgeted for the same purpose through non-federal sources.

XXVI. Notice of Funding Opportunity Requirements

All the instructions, guidance, limitations, and other conditions set forth in the Notice of Funding Opportunity (NOFO) for this program are incorporated here by reference in the award terms and conditions. All recipients must comply with any such requirements set forth in the program NOFO.

XXVII. Patents and Intellectual Property Rights

Recipients are subject to the Bayh-Dole Act, 35 U.S.C. § 200 et seq, unless otherwise provided by law. Recipients are subject to the specific requirements governing the development, reporting, and disposition of rights to inventions and patents resulting from federal financial assistance awards located at 37 C.F.R. Part 401 and the standard patent rights clause located at 37 C.F.R. § 401.14.

XXVIII. Procurement of Recovered Materials

States, political subdivisions of states, and their contractors must comply with Section 6002 of the Solid Waste Disposal Act, Pub. L. 89-272 (1965), (codified as amended by the Resource Conservation and Recovery Act, 42 U.S.C. § 6962.) The requirements of Section 6002 include procuring only items designated in guidelines of the Environmental Protection Agency (EPA) at 40 C.F.R. Part 247 that contain the highest percentage of recovered materials practicable, consistent with maintaining a satisfactory level of competition.

XXIX. Rehabilitation Act of 1973

Recipients must comply with the requirements of Section 504 of the Rehabilitation Act of 1973, Pub. L. 93-112 (1973), (codified as amended at 29 U.S.C. § 794,) which provides that no otherwise qualified handicapped individuals in the United States will, solely by reason of the handicap, be excluded from participation in, be denied the benefits of, or be subjected to discrimination under any program or activity receiving federal financial assistance.

XXX. Reporting of Matters Related to Recipient Integrity and Performance General Reporting Requirements.

If the total value of any currently active grants, cooperative agreements, and procurement contracts from all federal awarding agencies exceeds $10,000,000 for any period of time during the period of performance of this federal award, then the recipients must comply with the requirements set forth in the government-wide Award Term and Condition for Recipient Integrity and Performance Matters located at 2 C.F.R. Part 200, Appendix XII, the full text of which is incorporated here by reference in the award terms and conditions.

XXXI. Reporting Subawards and Executive Compensation Reporting of first tier subawards.

Recipients are required to comply with the requirements set forth in the government-wide award term on Reporting Subawards and Executive Compensation located at 2 C.F.R. Part 170, Appendix A, the full text of which is incorporated here by reference in the award terms and conditions.

XXXII. SAFECOM

Recipients receiving federal financial assistance awards made under programs that provide emergency communication equipment and its related activities must comply with the SAFECOM Guidance for Emergency Communication Grants, including provisions on technical standards that ensure and enhance interoperable communications.

XXXIII. Terrorist Financing

Recipients must comply with E.O. 13224 and U.S. laws that prohibit transactions with, and the provisions of resources and support to, individuals and organizations associated with terrorism. Recipients are legally responsible to ensure compliance with the Order and laws.

XXXIV. Trafficking Victims Protection Act of 2000 (TVPA) Trafficking in Persons.

Recipients must comply with the requirements of the government-wide financial assistance award term which implements Section 106 (g) of the Trafficking Victims Protection Act of 2000 (TVPA), codified as amended at 22 U.S.C. § 7104. The award term is located at 2 C.F.R. § 175.15,

the full text of which is incorporated here by reference.

XXXV. Universal Identifier and System of Award Management

Requirements for System for Award Management and Unique Entity Identifier Recipients are required to comply with the requirements set forth in the government-wide financial assistance award term regarding the System for Award Management and Universal Identifier Requirements located at 2 C.F.R. Part 25, Appendix A, the full text of which is incorporated here by reference.

XXXVI. USA PATRIOT Act of 2001

Recipients must comply with requirements of Section 817 of the Uniting and Strengthening America by Providing Appropriate Tools Required to Intercept and Obstruct Terrorism Act of 2001 (USA PATRIOT Act), which amends 18 U.S.C. §§ 175–175c.

XXXVII. Use of USDHS Seal, Logo and Flags

Recipients must obtain permission from their USDHS FAO prior to using the USDHS seal(s), logos, crests or reproductions of flags or likenesses of USDHS agency officials, including use of the United States Coast Guard seal, logo, crests or reproductions of flags or likenesses of Coast Guard officials.

XXXVIII. Whistleblower Protection Act

Recipients must comply with the statutory requirements for whistleblower protections (if applicable) at 10 U.S.C § 2409, 41 U.S.C. § 4712, and 10 U.S.C. § 2324, 41 U.S.C. §§ 4304 and 4310.

The remainder of this page is intentionally left blank.

ATTACHMENT 2
Reimbursement Checklist

DHSEM reserves the right to update this check list throughout the life of the grant to ensure compliance with applicable federal and state rules and regulations. ***Please only check the categories that apply to the reimbursement you are currently requesting.***

EQUIPMENT

- ☐ Have all invoices been included?
- ☐ Has AEL # been identified for each purchase?
- ☐ If service/warranty expenses are listed, are they only for the performance period of the grant?
- ☐ Has proof of payment been included? (e.g., canceled check, Electronic Funds Transfer (EFT) confirmation, or P-Card back up documentation which will include receipt with vendor, copy of credit card statement showing expense charged, and payment to credit card Company for that statement)

CONSULTANTS/CONTRACTORS

- ☐ Does the amount billed by consultant add up correctly?
- ☐ Has all appropriate documentation to denote hours worked been properly signed?
- ☐ Have copies of all planning materials and work product (e.g., meeting documents, copies of plans) been included? (If a meeting was held by recipient or contractor/consultant of recipient, an agenda and signup sheet with meeting date must be included).
- ☐ Has the invoice from consultant/contractor been included?
- ☐ Has proof of payment been included? (e.g., canceled check, Electronic Funds Transfer (EFT) confirmation, or P-Card back up documentation which will include receipt with vendor, copy of credit card statement showing expense charged, and payment to credit card Company for that statement).

SALARY POSITIONS (Note: this applies to positions billed under M&A)

- ☐ Have the following been provided: signed time sheet by employee and supervisor and proof that employee was paid for time worked (statement of earnings, copy of payroll check or payroll register)?
- ☐ Has a time period summary sheet been included for total claimed amount?
- ☐ Has a general ledger payroll report been included for total claimed amount? Ensure this report includes both employee and employer payroll information (i.e., benefits/contributions).
- ☐ Does the back-up documentation include a copy of the check stub per employee for the time period covered?
- ☐ Does the back-up documentation provided match the time period for which reimbursement is being requested?

OTHER:

- ☐ If EHP form needed – has copy of it and approval from USDHS/FEMA been included?

MATCHING FUNDS (IF APPLICABLE)

- ☐ Contributions are from Non-Federal funding sources.
- ☐ Contributions are from cash or in-kind contributions which may include training investments.
- ☐ Contributions are not from salary, overtime, or other operational costs unrelated to training.

This page is intentionally left blank.

ATTACHMENT 3
Glossary and Definitions

Applicant: When an entity applies for PA funding, it is the **Applicant**. Once the Applicant receives funding, it is either the **recipient, pass-through entity,** or a **sub-recipient**.

Authorized Equipment List (AEL): The Authorized Equipment List (AEL) is a list of approved equipment types allowed under FEMA's preparedness grant programs.

Backfill: The act of filling a position left by another employee who has been moved to another role.

Cost Match: Recipient or sub-recipient contribution. This can be cash (hard match) or third party in-kind (soft match). 2 C.F.R. 200.306.

Cost Sharing or Matching: The portion of project costs not paid by federal funds or contributions (unless otherwise authorized by federal statute). 2 C.F.R. 200.1 Cost sharing or matching.

Declared fire: An uncontrolled fire or fire complex, threatening such destruction as would constitute a major disaster, which the FEMA Regional Administrator has approved in response to a state's request for a fire management assistance declaration and in accordance with the criteria listed in 44 C.F.R. 204.21. Fire Management Assistance Declaration Criteria.

Disallowed costs: Those charges to a federal award that the federal awarding agency or pass-through entity determines to be unallowable, in accordance with the applicable federal statutes, regulations, or the terms and conditions of the federal award. 2 C.F.R. 200.1 Disallowed costs.

Demobilization: The process and procedures for deactivating, disassembling, and transporting back to their point of origin all resources that had been provided to respond to and support a declared fire.

Disaster: An emergency condition affecting all or part the state, overwhelming local resources, in which there is likely to be a significant recovery period. The Governor may request a Robert T. Stafford Act (Stafford Act) Disaster Declaration through FEMA, asking for the Public Assistance Program, Fire Management Assistance Program, Individual Assistance Program and Mitigation based upon known and estimated damage assessment data.

Disaster Recovery Reform Act of 2018 (DRRA): The DRRA represents the most comprehensive Emergency Management reform since the Post-Katrina Emergency Management Reform Act in 2006. It includes a larger and more reliable funding stream for pre-disaster mitigation, expanded assistance for individuals and households, and support for states, localities, tribes, and territories (SLTTs) to develop their own emergency management capabilities.

Emergency: A condition in which local and state emergency response agencies are overwhelmed by an incident to the point that federal assistance is needed. Unlike a disaster, an emergency does not have a recovery phase. The Governor may request a Stafford Act Emergency Declaration through FEMA, asking for the Public Assistance Program and/or Fire Management Assistance Grant.

Emergency Work: Work which must be done before, during and immediately after a disaster event to save lives and to protect improved property and public health and safety or to avert or lessen the threat of a major disaster. The FEMA Public Assistance emergency work Categories are:

- Category A (Debris Removal)
- Category B (Emergency Protective Measures)

Equipment: Tangible personal property (including information technology systems) having a useful life of more than one year and a per-unit acquisition cost which equals or exceeds the lesser of the capitalization level established by the non-federal entity for financial statement purposes, or $5,000. 2 C.F.R. 200.1 Equipment.

*Expenditures***:** Charges made by a non-federal entity to a project or program for which a federal award was received. 2 C.F.R. 200.1 Expenditures.

Federal Award: The federal financial assistance that a recipient receives directly from a federal awarding agency or indirectly from a pass-through entity. 2 C.F.R. 200.1 Federal award.

Federal Emergency Management Agency (FEMA): The federal agency responsible for coordinating disaster recovery efforts in partnership with state, local, and tribal governments.

Federal Share: The portion of the federal award costs that are paid using federal funds. 2 C.F.R. 200.1 Federal share.

FEMA/State Agreement: A formal, legal document between FEMA and the state or a tribal government giving the understandings, commitments, terms, conditions, and timelines for assistance resulting from a federal disaster, emergency, or fire declaration, declared by the President.

Governor's Authorized Representative (GAR): The person designated by the Governor to execute all necessary documents for disaster assistance programs on behalf of the state and local grant recipients. The GAR is responsible for state compliance with the FEMA/State Agreement. The GAR may also be designated as the State Coordinating Officer.

Hazard Mitigation: Mitigation is the effort to reduce loss of life and property by lessening the impact of disasters.

Hazard Mitigation (Sections 404 and 406): Section 406 Mitigation measures are specific to the mechanism of the declared disaster and are an integral part of the reconstructed work on a facility or will protect or benefit the repaired portion of the facility. These are different from mitigation measures that are considered for eligibility under the Hazard Mitigation Grant Program (HMGP) of Section 404 of the Stafford Act. In the HMGP program, measures are proposed that may involve facilities other than those damaged by the disaster, new facilities, or even non-structural measures such as the development of floodplain management regulations.

Incident Period: The time interval during which the declared disaster occurs. The Regional Administrator, in consultation with the Governor's Authorized Representative and the Principal Advisor will establish the incident period. Generally, costs must be incurred during the incident period to be considered eligible.

The declaration designates the incident period. The incident period is the span of time during which the federally declared incident occurs. This period varies in length, depending on the incident.

Improved Project: When performing restoration work on a damaged facility, a sub-recipient may use the opportunity to make improvements to the facility. Projects that incorporate such improvements are improved projects. The improved facility must have the same function and at least the equivalent capacity as that of the pre-disaster facility. Federal funding for improved projects is limited to the lesser of the following: the federal share of the approved estimated costs to restore the damaged facility to its pre-disaster design and function or the federal share of the actual cost of completing the improved project. The sub-recipient must obtain FEMA approval, via the NMDHSEM, for an improved project prior to

construction.

Indirect Costs: Costs a recipient or sub-recipient incurs for a common or joint purpose benefitting more than one cost objective that are not readily assignable to the cost objectives specifically benefited.

Joint Field Office (JFO): A temporary facility established in or near a declared disaster area to serve as the field headquarters for FEMA, other federal and state recovery personnel, and serve as the focal point for federal disaster operations, direction, coordination, and information.

Large Project: An approved project estimated to cost the same as or more than the large project threshold amount. The large project threshold is a dollar amount adjusted annually to reflect changes in the Consumer Price Index for all urban consumers. The large project threshold amount, applicable to all projects, is the amount in effect on the declaration date of the disaster, regardless of when project approval is made or when the work is performed.

Management Costs: Management costs are any indirect costs, any direct administrative costs, and any other administrative expenses associated with the administration of HMA awards and subawards. Management costs are provided under HMGP, HMGP Post Fire, BRIC and FMA. For the Hazard Mitigation Grant Program (HMGP) and Hazard Mitigation Grant Program Post Fire (HMGP Post Fire), recipients will be reimbursed no more than 15% of the total amount of the award, of which not more than 10% may be used by the recipient and 5% by the subrecipient. Under HMGP and HMGP Post Fire, recipients' Administrative Plans must include procedures for monitoring and reporting on subrecipient management costs before receiving funding for management costs. For Building Resilient Infrastructure and Communities (BRIC) and Flood Mitigation Assistance (FMA), recipients may apply for a maximum of 10% of the total funds requested in their application cost estimate (federal and non-federal shares) for management costs to support the sub-applications included as part of their award. Subapplicants for BRIC and FMA may apply for a maximum of 5% of the total funds requested in a sub-application for management costs. Additional information is available in FEMA Policy #104-11-1, Hazard Mitigation Grant Program Management Costs (Interim).

Pass-through Entity: A non-federal entity that provides a subaward to a sub-recipient to carry out part of a federal program. 2 C.F.R. 200.1 Pass through entity (PTE).

Performance Period for Hazard Mitigation Assistance: The period of time stipulated in the Sub-recipient Grant Agreement, as amended, during which the sub-recipient must finish the approved work. Projects completed after the active Period of Performance deadline will be considered ineligible.

Quarterly Financial Progress Report: The information in this report is used by NMDHSEM to monitor sub-recipient cash flow, performance, and project implementation to ensure proper use of federal funds.

Recipient: Formally referred to as the grantee or sub-grantee or applicant. Federally Recognized Indian Tribal Governments may also be Recipients if they so desire and if they meet FEMA requirements.

Recovery Officer: Aids in the administration of disaster recovery grant programs for statewide disasters and emergencies. Coordinates and co-administers disaster recovery grant programs, ensuring that they are implemented and carried out according to state and federal program requirements.

Recovery Unit: This is the unit within the NMDHSEM Response and Recovery Bureau designated as responsible for the programmatic administration of the FEMA PA and FMAG Programs.

Recovery Unit Manager: Responsible for administering and supervising staff responsible for federal and state disaster recovery programs and serves as the Deputy State Coordinating Officer (SCO) for

emergencies or major disaster declarations.

Response & Recovery Bureau Chief: Responsible for supervising staff responsible for federal and state disaster recovery programs and staff that provides operational response capabilities to support the citizens of New Mexico. This position also serves as State Coordinating Officer (SCO) for emergencies or major disaster declarations.

Request for Approval Form: Used by sub-recipient to request approval from NMDHSEM to expend funds for previously identified and approved projects. Approval must be received prior to expenditure.

Small Project: An approved project estimated to cost less than the large project threshold amount.

State Coordinating Officer (SCO): The person designated by the Governor to coordinate state and local disaster assistance efforts with those of the federal government. The GAR may also be the SCO. The Governor will name the GAR and the SCO in the FEMA/State Agreement.

Sub-recipient: Formally referred to as the sub-grantee or applicant, is a state agency, local government, tribal government, other legal governmental entity, or a private non-profit (PNP) organization that receives a sub-grant award and which is accountable to the state for the use of the funds provided. The FEMA reserves the final decision as to sub-recipient eligibility.

Supplanting: When a state or unit of local government reduces state or local funds for an activity specifically because federal funds are available (or expected to be available) to fund that same activity. When supplanting is not permitted, federal funds must be used to **supplement** existing state or local funds for program activities and may not replace state or local funds that have been appropriated or allocated for the same purpose. Additionally, federal funding may not replace state or local funding that is required by law. If a question of supplanting arises, the sub-recipient or grantee will be required to substantiate that the reduction in non-federal resources occurred for reasons other than the receipt or expected receipt of federal funds. US Department of Justice Office of Justice Programs, Grants 101.

The remainder of this page is intentionally left blank.

ATTACHMENT 4
Acronyms

AEL: Authorized Equipment List
AGAR: Alternate Governor's Authorized Representative
ASB: Administrative Services Bureau of NMDHSEM
CFDA: Catalog of Federal Domestic Assistance
DAC: Direct Administrative Costs
DOT: Department of Transportation
DPS: Department of Public Safety
DRRA: Disaster Recovery Refo1m Act of 2018
DSCO: Deputy State Coordinating Officer
DSIBD: Deputy State Infrastructure Branch Director
DSPAGS: Deputy State Public Assistance Group Supervisor
EMAC: Emergency Management Assistance Compact
EMMIE: Emergency Management Mission Integrated Environment
EMNRD: Energy, Minerals and Natural Resources Department
FEMA: Federal Emergency Management Agency
FFATA- Federal Funding Accountability and Transparency Act
FMAG - Fire Management Assistance Grant
GAR: Governor's Authorized Representative
IMAS: Intrastate Mutual Aid System
INF: Immediate Needs Funding
IOF: Initial Operating Facility
JFO: Joint Field Office
NSPO: Net Small Project Overrun
NMDHSEM: New Mexico Department of Homeland Security and Emergency Management
ONA: Other Needs Assistance
OMB: Office of Management and Budget
PA: Public Assistance
PAGS: Public Assistance Group Supervisor
PAPPG: Public Assistance Program and Policy Guide
PDA: Preliminary Damage Assessment
PDMG: Program Delivery Manager
PIO: Public Information Officer
PNP: Private Non-Profit
POP: Period of Performance
PW: Project Worksheet
R&R: Response & Recovery Bureau
REC: Record of Environmental Consideration
RO: Recovery Officer
RP A - Request for Public Assistance
SCO: State Coordinating Officer
SOW: Scope of Work
SHARE: New Mexico Statewide Human Resources, Accounting, and Management Reporting System

SIBD: State Infrastructure Branch Director
SPAGS: State Public Assistance Group Supervisor
SPAO: State Public Assistance Officer
USDHS: United States Department of Homeland Security
USFS: US Forest Service
VFO: Virtual Field Office

The remainder of this page is intentionally left blank.

2023_HMGP_SGA_HazardMitigationPlan

Final Audit Report 2024-10-02

Created:	2024-10-02
By:	JULIE KENNY (jckenny@santafenm.gov)
Status:	Signed
Transaction ID:	CBJCHBCAABAAPILoCCyJ_K5S32r5PWYAV5Zcob1IKO6d

"2023_HMGP_SGA_HazardMitigationPlan" History

Document created by JULIE KENNY (jckenny@santafenm.gov)
2024-10-02 - 2:52:50 PM GMT- IP address: 63.232.20.2

Document emailed to Rebecca Mnuk-Herrmann (ramnukherrmann@santafenm.gov) for signature
2024-10-02 - 2:53:31 PM GMT

Email viewed by Rebecca Mnuk-Herrmann (ramnukherrmann@santafenm.gov)
2024-10-02 - 3:42:01 PM GMT- IP address: 104.47.64.254

Document e-signed by Rebecca Mnuk-Herrmann (ramnukherrmann@santafenm.gov)
Signature Date: 2024-10-02 - 3:42:21 PM GMT - Time Source: server- IP address: 63.232.20.2

Agreement completed.
2024-10-02 - 3:42:21 PM GMT

Powered by Adobe Acrobat Sign

City of Santa Fe New Mexico

Finance Department

Project Ledger Request Form

Date of Request: 9/17/2024

Project Title: HAZARD MITIGATION PLAN & WILDFIRE RISK ASSESSMENT

Project Type: ☐ CIP ☑ Grant ☐ Internal Tracking

Project ID: OEM2522101

Grant ID: S2533/F2512

Approved By: _____

CT (Finance Use Only)

Department: OEM Project Manager: KYLE MORGAN Ext: 6704

Project Date Range: 7/23/2024 to 11/14/2027 ☐ Create Fixed Asset

---

☑ Multi-Funding (complete all funding sources, should equal 100%)

Funding Source: DHSEM-SUB GRANT (FEMA) DR-4652-0011-NM % of Funding: 75

MUNIS ORG: 2212850 MUNIS OBJ: 490580 Awarded Amount: 124574.82

Funding Source: NMDFA 24-ZI5044-MG25-084 % of Funding: 25

MUNIS ORG: 2212850 MUNIS OBJ: 490210 Awarded Amount: 38934.25

Expense String Phase:

A project must have at least one phase identified, this can be used as an additional level of tracking, for example, CIP - Design, Construction, etc. For Grants can be used as reimbursable types, such as transportation, salaries.

(You can create more than one phase and you can default MUNIS ORGs and OBJs, optional)

Phase: PLANNING, GRANT MGMT. MUNIS ORG: 2212850 MUNIS OBJ: 510300

Grants Only (list all grants if applicable):

Grantor Name: FED P/T NMDHEM-FEMA-DR-4652-0011-NM Awarded Amount: 124574.82

AR Charge Code: 2122850.490580 ☐ Grant funds multiple projects (Complete a form for each project)

Grantor Id: _____ Federal CFDA (if applicable): 97.039

Grantor Name: NMDFA 24-ZI5044-MG25-084 Awarded Amount: 38934.25

AR Charge Code: 2212850.490210 ☐ Grant funds multiple projects (Complete a form for each project)

Grantor Id: _____ Federal CFDA (if applicable): N/A

(If grants please provide all grant award documents with form) ☑ Attached Grant Documentation

Signature: Matthew Bonifer
Matthew Bonifer (Sep 20, 2024 15:41 MDT)

Email: mtbonifer@santafenm.gov

2023_HMGP_HazardMitigationPlan_Council_Packet_2024-10-23

Final Audit Report 2024-11-01

Created:	2024-10-30
By:	Justin Gonzales (jmgonzales@santafenm.gov)
Status:	Signed
Transaction ID:	CBJCHBCAABAAeuZ-CNx17GJSTwelu8Jqf9ZfnzNjnKK-

"2023_HMGP_HazardMitigationPlan_Council_Packet_2024-10-23" History

Document created by Justin Gonzales (jmgonzales@santafenm.gov)
2024-10-30 - 4:50:13 PM GMT- IP address: 63.232.20.2

Document emailed to BRIAN WILLIAMS (bgwilliams@santafenm.gov) for signature
2024-10-30 - 4:54:35 PM GMT

Email viewed by BRIAN WILLIAMS (bgwilliams@santafenm.gov)
2024-10-30 - 5:00:51 PM GMT- IP address: 104.47.64.254

Document e-signed by BRIAN WILLIAMS (bgwilliams@santafenm.gov)
Signature Date: 2024-10-30 - 5:01:23 PM GMT - Time Source: server- IP address: 63.232.20.2

Document emailed to bjmoya@santafenm.gov for signature
2024-10-30 - 5:01:25 PM GMT

Email viewed by bjmoya@santafenm.gov
2024-10-30 - 5:01:49 PM GMT- IP address: 98.60.113.23

Signer bjmoya@santafenm.gov entered name at signing as Brian J Moya
2024-10-30 - 5:02:47 PM GMT- IP address: 98.60.113.23

Document e-signed by Brian J Moya (bjmoya@santafenm.gov)
Signature Date: 2024-10-30 - 5:02:49 PM GMT - Time Source: server- IP address: 98.60.113.23

Document emailed to HENRI HAMMOND-PAUL (hmhammondpaul@santafenm.gov) for signature
2024-10-30 - 5:02:53 PM GMT

Email viewed by HENRI HAMMOND-PAUL (hmhammondpaul@santafenm.gov)
2024-10-31 - 3:35:17 PM GMT- IP address: 104.47.64.254

Powered by Adobe Acrobat Sign

Document e-signed by HENRI HAMMOND-PAUL (hmhammondpaul@santafenm.gov)
Signature Date: 2024-10-31 - 3:35:35 PM GMT - Time Source: server- IP address: 63.232.20.2

Document emailed to mtbonifer@santafenm.gov for signature
2024-10-31 - 3:35:37 PM GMT

Email viewed by mtbonifer@santafenm.gov
2024-10-31 - 3:43:09 PM GMT- IP address: 104.47.64.254

Signer mtbonifer@santafenm.gov entered name at signing as Matthew Bonifer
2024-10-31 - 4:10:27 PM GMT- IP address: 63.232.20.2

Document e-signed by Matthew Bonifer (mtbonifer@santafenm.gov)
Signature Date: 2024-10-31 - 4:10:29 PM GMT - Time Source: server- IP address: 63.232.20.2

Document emailed to ajhopkins@santafenm.gov ajhopkins@santafenm.gov (ajhopkins@santafenm.gov) for signature
2024-10-31 - 4:10:31 PM GMT

Email viewed by ajhopkins@santafenm.gov ajhopkins@santafenm.gov (ajhopkins@santafenm.gov)
2024-10-31 - 4:13:10 PM GMT- IP address: 104.47.64.254

Document e-signed by ajhopkins@santafenm.gov ajhopkins@santafenm.gov (ajhopkins@santafenm.gov)
Signature Date: 2024-10-31 - 4:14:01 PM GMT - Time Source: server- IP address: 63.232.20.2

Document emailed to EMILY OSTER (ekoster@santafenm.gov) for signature
2024-10-31 - 4:14:03 PM GMT

Email viewed by EMILY OSTER (ekoster@santafenm.gov)
2024-11-01 - 5:05:19 PM GMT- IP address: 104.47.64.254

Document e-signed by EMILY OSTER (ekoster@santafenm.gov)
Signature Date: 2024-11-01 - 5:11:02 PM GMT - Time Source: server- IP address: 63.232.20.2

Document emailed to JOHN BLAIR (jwblair@santafenm.gov) for signature
2024-11-01 - 5:11:04 PM GMT

Email viewed by JOHN BLAIR (jwblair@santafenm.gov)
2024-11-01 - 6:44:48 PM GMT- IP address: 104.47.64.254

Signer JOHN BLAIR (jwblair@santafenm.gov) entered name at signing as John Blair
2024-11-01 - 6:45:17 PM GMT- IP address: 63.232.20.2

Document e-signed by John Blair (jwblair@santafenm.gov)
Signature Date: 2024-11-01 - 6:45:19 PM GMT - Time Source: server- IP address: 63.232.20.2

Agreement completed.

2024-11-01 - 6:45:19 PM GMT

CITY OF SANTA FE

Date: October 23, 2024

To: Governing Body

Via: Henri Hammond-Paul, Community Health and Safety Director
HENRI HAMMOND-PAUL (Oct 31, 2024 09:35 MDT)
Brian Moya, Fire Department Chief
Brian J Moya (Oct 30, 2024 11:02 MDT)

From: **Brian Williams, Office of Emergency Management Director**
Nathan Miller, Wildland Fire Superintendent
BRIAN WILLIAMS (Oct 30, 2024 11:01 MDT)

Subject: **Hazard Mitigation Grant Program Grant Approval – Hazard Mitigation Plan and Wildfire Risk Assessment Plans**

ITEM AND ISSUE:
Request Approval of the 2023 Hazardous Mitigation Grant Program (HMGP) Sub-Grant Agreement DR-4652-0011-NM in the Total Amount of $163,509.97 with the New Mexico Department of Homeland Security and Emergency Management for Updating the City of Santa Fe Hazard Mitigation Plan and Development of a Wildfire Risk Assessment. Brian Williams, Director Office of Emergency Management, bgwilliams@santafenm.gov.

Request Approval of a New Mexico Match Fund Grant 24-ZI5044- MG25-84 in the Total Amount of $38,934.25 with the New Mexico Department of Finance and Administration for Federal Grant Match Funds. Brian Williams, Director Office of Emergency Management, bgwilliams@santafenm.gov.

Request Approval of a FY25 BAR to Budget $163,509.97 in Awarded Grant Funds to the Office of Emergency Management Professional Contracts.

Action Requested: Grant Approval (2); BAR approval

BACKGROUND AND SUMMARY:
The City of Santa Fe applied for this reimbursable grant through the New Mexico Department of Homeland Security and Emergency Management (DHSEM) and the Federal Emergency Management Agency (FEMA). The Hazard Mitigation Grant Program (HMGP) supports states, local communities, tribes and territories as they undertake hazard mitigation projects, reducing the risks they face from disasters and natural hazards.

The Office of Emergency Management and the Santa Fe Fire Department Wildland Fire Division coordinated to secure this grant for developing a comprehensive update to the City of Santa Fe's Hazard Mitigation Plan (HMP), as well as developing a new citywide Wildfire Risk Assessment. Both efforts will be contractor lead in accordance with relevant requirements from FEMA.

The completed Hazard Mitigation Plan will be used to prioritize future mitigation projects as well as updates to the City's Threat and Hazard Identification and Risk Assessment, and Integrated Preparedness Plans.

The Wildfire Risk Assessment will additionally include an analysis of existing wildland firefighting capabilities and the City's current preparedness for responding to wildfire threats, as well as recommendations for improving these capabilities.

The Office of Emergency Management applied for matching funds to cover the local share through the New Mexico Department of Finance and Administration (DFA) after receiving the federal grant award. These funds will cover the entirety of the local share requirement (25%). The goal of this program is to leverage state funds to allow for increased grant applications and awards for local communities throughout the state. The HMGP grant amount also includes $7,772.05 in 100% federally funded subrecipient management costs to assist with capacity in managing the grant.

The Office of Emergency Management will manage both grants and the Hazard Mitigation Plan project, while the Fire Department will manage the Wildfire Risk Assessment, with input and assistance from the Office of Emergency Management and other stakeholders.

The term of the grant ends on November 14, 2027.

PROCUREMENT METHOD:
Not Applicable. Grant approval only.

Chief Procurement Officer Approval:_____ **Date:**_____
Comment/Exceptions:_____

Supporting Information:

CONTRACT NUMBER:
The FY25 Project ledger number is OEM2522101

SOURCE/REVENUE: ☐Expense ☒Revenue

The funding source is:
Federal Share
Fund Name/Number: Emergency Services/Fund 231
Munis Org Name/Number: Emergency Management/2212850
Munis Object Name/Number: Fed Grant (FEMA)/490580

Local Share
Fund Name/Number: Emergency Services/Fund 231
Munis Org Name/Number: Emergency Management/2212850
Munis Object Name/Number: State Grant (DFA)/490210

List grant award number: *DR-4652-0011-NM (FEMA) / 24-ZI5044- MG25-84 (DFA)*

Grant Manager / Accounting Officer Approval: Matthew Bonifer
Matthew Bonifer (Oct 31, 2024 10:10 MDT) **Date:** 10/31/2024
Comment/Exceptions: _____

Project Ledger #: OEM2522101

Budget Officer Approval: Andy Hopkins **Date:** 10/31/2024
Comment/Exceptions: _____

CAPITAL ASSET (will this procurement result in a tangible item that costs more than $5,000?):

☐Yes | ☒ No

 # (if known): _____

Repair or Replacement of Existing Equipment:

☐Yes | ☒ No
If yes -> ☐Repair | ☐ Replacement

Please explain: _____

Capital Project:
(New and improvement projects that are going to cost $10,000 or more)
☐ Yes | ☒ No

Project Ledger #: _____

Anticipated length of project: 24 months _____

Asset Manager Approval: _____ **Date:** _____
Comment/Exceptions: _____

Department Approvals:
IT Components: ☐ **Yes | ☒ No**
Vehicles: ☐ **Yes | ☒ No**
Facilities, Furniture, Fixtures, Equipment: ☐ **Yes | ☒ No**

Approval: _____ **Title:** _____ **Date**: _____
Approval: _____ **Title:** _____ **Date**: _____
Comment & Exceptions: _____

Department Contract Administrator Contact Info:
Justin Gonzales, jmgonzales@santafenm.gov

ATTACHMENTS:

1. Federal Sub-Recipient Grant Agreement
2. State Grant Agreement
3. Budget Amendment Resolution

Log # *{Finance use only}*:	
Journal # *{Finance use only}*:	

City of Santa Fe, New Mexico
BUDGET AMENDMENT RESOLUTION (BAR)

DEPARTMENT / DIVISION NAME	DATE
Public Works / Stormwater CIP	9/11/2024

ITEM DESCRIPTION	ORG	OBJECT	PROJECT	INCREASE	DECREASE
EXPENDITURES				*{enter as positive #}*	*{enter as negative #}*
PROFESSIONAL CONTRACTS - Project Costs	2212850	510300	OEM2522101	155,737	
PROFESSIONAL CONTRACTS - Grant Management Costs	2212850	510300	OEM2522101	7,772	
REVENUES				*{enter as negative #}*	*{enter as positive #}*
FEMA - Hazard Mitigation Plan / Wildfire Risk Assessment	2212850	490580	OEM2522101	(116,803)	
DFA - Hazard Mitigation Plan / Wildfire Risk Assessment	2212850	490210	OEM2522101	(38,934)	
FEMA - Subrecipient Management Costs	2212850	490580	OEM2522101	(7,772)	
				$ (0.00)	$ -

JUSTIFICATION: *(use additional page if needed)*
--Attach supporting documentation/memo

FY 25 budget increase for subrecipient grant award: DR-5430-0011-NM: FEMA Hazard Mitigation Grant for Hazard Mitigation Plan Update and Wildfire Risk Assessment in the amount of $116,803.77 for Planning and $7,772.05 for Management Costs.

Expires 11/14/2027

FY 25 budget increase for Department of Finance and Administration State Matching Grant in the amount of $38,934.25 to cover 25% local match requirement of FEMA Grant (DR-5430-0012-NM). Expires 5/14/2028

{Complete section below if BAR results in a net change to ANY Fund}

Fund(s) Affected	Fund Balance Increase/(Decrease)
TOTAL:	**0**

Kyle Morgan — 9/11/2024
Prepared By *{print name}* — Date

Division Director Signature *{optional}* — Date

HENRI HAMMOND-PAUL (Oct 31, 2024 09:35 MDT) — 10/31/2024
Department Director Signature — Date

{Use this form for Finance Committee/ City Council agenda items ONLY}

CITY COUNCIL APPROVAL

City Council Approval Date:

Agenda Item #:

Andy Hopkins — 10/31/2024
Budget Officer — Date

Finance Director *{≤ $5,000}* — Date

City Manager *{≤ $60,000}* — Date

New Mexico Department of Finance and Administration

407 Galisteo St,
Santa Fe, NM 87501
(505) 827-4985

Governor Michelle Lujan Grisham
Cabinet Secretary Wayne Propst

Infrastructure Planning & Development Division
Wesley Billingsley, Division Director

RECIPIENT:

City of Santa Fe

APPROPRIATION NUMBER:	ALLOCATION AMOUNT:	REVERSION DATE:
24-ZI5044- MG25-84	$38,934.25	Six (6) months after the end date of the associated federal grant's period of performance.

ALLOCATION PURPOSE

$38,934.25 for costs to meet cost sharing requirements for City of Santa Fe Hazard Mitigation Plan Update & Wildfire Risk Assessment. Funds unexpended by the date specified in the period of performance terms of your federal grant agreement, will be reverted to the State of New Mexico within 6 months of the federal grant closeout.

ALLOCATION DISBURSEMENT

100% of the allocated funds will be disbursed upon execution of the agreement. The Allocation Recipient agrees to submit Annual reports using Exhibit A, Match Fund Annual Report Form, providing updates on the status of the expenditures from this appropriation. The Recipient also understands and agrees to use the allocated funds in accordance with the New Mexico Match Fund Policy.

CERTIFICATION

I hereby certify that City of Santa Fe

1. Will only use the allocated funds to carry out and/or perform activities described in allocation language.
2. Will submit annual reporting through the Match Fund Annual Report link.
3. Will adhere to the Match Fund policy.
4. Will adhere to the provisions of Attachment A- Special Provisions

John Blair
John Blair (Nov 1, 2024 12:45 MDT)

City Manager, **City of Santa Fe** — Date: 11/01/2024

Emily K. Oster

Finance Director, **City of Santa Fe** — Date: 11/01/2024

PUBLICITY

Any Publicity regarding this agreement must not be released without prior written approval from the DFA. For purposes of this agreement, "Publicity" means notices, informational pamphlets, press releases, email response, research, reports, signs, and similar public notices prepared by or for the Subrecipient or jointly with others. The Recipient shall not issue, without consent of the DFA, any press release, or make any public announcement with respect to this agreement. In the performance of responsibilities under this agreement, the Recipient agrees to obtain approval of the DFA in advance with respect to all Public Relations, all communications with media, or all communications with any other member of the public with respect to this agreement, except to acknowledge that an agreement does exist. For purposes of this agreement, "Public Relations" includes community relations and means those activities dedicated to maintaining the image of the DFA or maintaining or promoting understanding and favorable relations with the community or public at large or any segment of the public. For violations of this provision, as determined solely by the DFA, the DFA reserves the right to terminate this agreement.

New Mexico
Department *of* Finance
and Administration

407 Galisteo St,
Santa Fe, NM 87501
(505) 827-4985

Governor Michelle Lujan Grisham
Cabinet Secretary Wayne Propst

Infrastructure Planning & Development Division
Wesley Billingsley, Division Director

APPROVAL

In accordance with the authority conferred on the Department of Finance & Administration by the statute appropriating these funds, I hereby approve this certification for MG25-84 in the amount of $38,934.25.

Wesley Billingsley
Director, Infrastructure Planning & Development Division

Date

New Mexico
Department *of* Finance
and Administration

407 Galisteo St,
Santa Fe, NM 87501
(505) 827-4985

Governor Michelle Lujan Grisham
Cabinet Secretary Wayne Propst

Infrastructure Planning & Development Division
Wesley Billingsley, Division Director

OPTIONAL ATTACHMENT A
SPECIAL CONDITIONS

The grant award requires grantees' accounting methods and procedures, including their internal control framework, to be scrutinized, so as to safeguard State appropriations and assets acquired with such appropriations. This Matching Grant Special Grant Condition(s) **Attachment A** is necessary pursuant to Executive Order 2013-006 (2.A.2.a-c, if applicable), due to the Grantees' material weaknesses, significant deficiencies, or findings that raised concerns as to the ability to expend grant funds in accordance with applicable law in the organization's FY23 audit. The Special Conditions identified below apply to the authorized agent, City of Santa Fe.

Procurement - All purchases or contracts the Grantee enters that shall use funding from the Department capital appropriations grant must be approved by the Department prior to the initiation of implementing purchasing documents. The Grantee shall receive such prior approval via official correspondence from the Department, which may be through letter or email. The Grantee shall submit the following to the Department in pursuit of prior approval: purchasing policies and procedures, CFO certification, documentation of management and program approval, policies and procedures governing purchasing and contracting, a copy of the current procurement and contracting policies, and documentation regarding informing staff responsible for purchasing and contracting on such policies and procedures.

Cash Management – policies and procedures on cash management of federal funds. Provide procedures used to draw and disburse federal funds. Provide procedures to reconcile draw amounts, deposits and disbursements; and to prepare federal cash reporting documents to ensure compliance with federal regulations.

The City of Santa was required to and has provided sufficient documentation regarding procurement and cash management as referenced in the City of Santa Fe's FY23 Audit file. Therefore, the criteria to enter into this agreement have been met.

Wesley Billingsley Director, Infrastructure Planning & Development Division	Date

New Mexico
Department *of* Finance
and Administration

407 Galisteo St,
Santa Fe, NM 87501
(505) 827-4985

Governor Michelle Lujan Grisham
Cabinet Secretary Wayne Propst

Infrastructure Planning & Development Division
Wesley Billingsley, Division Director

Match Fund Annual Report Form
Exhibit A

Appropriation Recipient: _____

Appropriation Number: _____

Use of Appropriation Funds	**Amount**
Personnel Expenses	$ 0.00
Contract Expenses	$ 0.00
Other Expenses	$ 0.00
Total Amount of Appropriation Funds Expended	$ 0.00

Narrative *Describe the outcomes, results, benefit, and or uses of the appropriation funds*

IN WITNESS WHEREOF, the City of Santa Fe has agreed to this Grant Award as of the date of the signature by the required approval authorities below.

ATTEST:

GERALYN CARDENAS, INTERIM CITY CLERK

CITY ATTORNEY'S OFFICE:

Oct 14, 2024

REBECCA MNUK-HERRMANN, ASSISTANT CITY ATTORNEY

Match Fund Grant Agreement MG25-84 with CoSF signature page

Final Audit Report 2024-10-14

Created:	2024-10-08
By:	Amy Cawthon (amcawthon@santafenm.gov)
Status:	Signed
Transaction ID:	CBJCHBCAABAASuWLZ1sP1EGivkr6LBS-t0LZF5Q-ob_I

"Match Fund Grant Agreement MG25-84 with CoSF signature page" History

Document created by Amy Cawthon (amcawthon@santafenm.gov)
2024-10-08 - 5:31:47 PM GMT- IP address: 63.232.20.2

Document emailed to Rebecca Mnuk-Herrmann (ramnukherrmann@santafenm.gov) for signature
2024-10-08 - 5:32:18 PM GMT

Email viewed by Rebecca Mnuk-Herrmann (ramnukherrmann@santafenm.gov)
2024-10-14 - 10:00:27 PM GMT- IP address: 174.240.19.127

Document e-signed by Rebecca Mnuk-Herrmann (ramnukherrmann@santafenm.gov)
Signature Date: 2024-10-14 - 10:00:50 PM GMT - Time Source: server- IP address: 174.240.19.127

Agreement completed.
2024-10-14 - 10:00:50 PM GMT

Powered by Adobe Acrobat Sign

State of New Mexico
DEPARTMENT OF HOMELAND SECURITY & EMERGENCY MANAGEMENT
P.O. Box 27111
Santa Fe, NM 87502

SUB-RECIPIENT GRANT AGREEMENT
HAZARD MITIGATION GRANT PROGRAM

CFDA 97.039 : Hazard Mitigation Grant Program

1. SUB-GRANT NO.	2. SUB-RECIPIENT NAME		3. PROJECT NAME
DR-4652-0011-NM	City of Santa Fe		City of Santa Fe Hazard Mitigation Plan Update & Wildfire Risk Assessment
4. STATE DFA VENDOR NUMBER	**5. EIN NUMBER**	**6. SAM UEI NUMBER**	**7. CAGE CODE**
54360	85-6000168	QLN2YKMMJ8X6	4C987
8. SUB-RECIPIENT PHYSICAL ADDRESS	**9. SUB-RECIPIENT REMIT ADDRESS**		
200 Lincoln Ave, Santa Fe, NM 87501	-		
10. DHSEM CONTACT NAME:	**11. CONTACT DESK PHONE:**	(225) 313-1774	
Natalie West	**CONTACT EMAIL ADDRESS:**	DHSEM.mitigation@dhsem.nm.gov cc: natalie.west@dhsem.nm.gov	
12a. PERFORMANCE PERIOD START DATE	7/23/2024	**12b. PERFORMANCE PERIOD END DATE**	11/14/2027
13. TOTAL AWARD AMOUNT:	$163,509.07		
13a. FEDERAL SHARE	**13b. LOCAL SHARE**	**13c. STATE SHARE**	
$124,574.82	$38,934.25	$0.00	

14a. NAME OF PROJECT AWARD		14b. FEDERAL SHARE	14c. NON-FEDERAL SHARE
1	Contractual	$113,104.79	$37,701.59
2	Travel	$3,697.98	$1,232.66
3	SRMC	$7772.05	
TOTAL AMOUNT OF PROJECT		$124,574.82	$38,934.25

WHEREAS The State of New Mexico will serve as the "pass-through entity" with respect to the State's role in providing sub-awards and administering grant assistance provided to sub-recipients and may, subject to a Memorandum of Agreement, directly support project development and administration.

WHEREAS funding has been obligated from the Federal Emergency Management Agency pursuant to a request by the applicant, The Sub-Recipient, City of Santa Fe.

NOW, THEREFORE, it is mutually understood and agreed between the recipient NMDHSEM, and **City of Santa Fe** hereinafter referred to as "sub-recipient," as follows:

ARTICLE 1: REQUIREMENTS AND ASSURANCES

A. The sub-recipient hereby agrees that the performance period for the grant identified on Page 1, Box 1. is consistent with the performance period identified on Page 1, Box 12a. and 12b. This Sub-recipient Grant Agreement, as amended, shall remain open for administrative purposes if necessary to achieve final payment and financial reconciliation.

B. The sub-recipient hereby agrees that the sub-recipient official signing this Sub-recipient Grant Agreement certifies that all financial expenditures, including all supporting documents submitted for reimbursement, have been incurred by the sub-recipient and are eligible and allowable expenditures consistent with the guidelines for this award. The sub-recipient agrees to follow reasonable professional standards in all financial management and bookkeeping procedures necessary to carry out this agreement.

C. The sub-recipient hereby agrees that no member, officer, or employee of the sub-recipient organization, or its designees or agents, no member of the governing body of the locality in which the program is situated, and no other public official of such locality or localities who exercises any functions or responsibilities with respect to the program during his or her tenure or for one year after that, shall have any interest, direct or indirect, in any contract or subcontract, or the process thereof, for work to be performed in connection with this Sub-recipient Grant Agreement; the sub-recipient shall incorporate in all such contracts a provision prohibiting such interest pursuant to the purposes of this Sub-recipient Grant Agreement.

D. The sub-recipient hereby agrees that it understands and agrees that it cannot use any federal funds, either directly or indirectly, in support of the enactment, repeal, modification, or adoption of any law, regulation, or policy, at any level of government, without the express written approval of the State of New Mexico or FEMA.

E. The sub-recipient hereby agrees that FEMA reserves a royalty-free, non-exclusive, and irrevocable license to reproduce, publish, or otherwise use and authorize others to use, for federal government purposes: (1) the copyright in any work developed under this Sub-recipient Grant Agreement; and (2) any rights of copyright to which the sub-recipient purchases ownership with federal support. The sub-recipient agrees to consult with FEMA through NMDHSEM regarding allocating any patent rights that arise from or are purchased with this funding.

F. The sub-recipient hereby agrees that signatures of the sub-recipient officials on this Sub-recipient Grant Agreement attest to the sub-recipient's understanding, acceptance, and compliance with Lobbying, Debarment, Suspension, and Other Responsibility Matters; Drug- free Workplace; Conflict of Interest, and Non-Supplanting certifications. Federal funds will not be used to supplant state or local funds. Federal funds will be used to supplement existing sub-recipient funding to augment program activities and not replace those funds which have been appropriated in the budget for the same purpose.

G. The sub-recipient hereby agrees that their accounting system allows for the separation of fund

sources. Funding provided under this Sub-recipient Grant Agreement cannot be commingled with funds from other federal, state, or local agencies, and each project must be accounted for separately.

H. The sub-recipient hereby agrees that it shall comply with applicable Federal Civil Rights Laws and Regulations: Title VI of the Civil Rights Act of 1964, Section 504 of the Rehabilitation Act of 1973, Title IX of the Education Amendments of 1972, Age Discrimination Act of 1975, and Americans with Disabilities Act of 1991. The sub-recipient will take reasonable steps to ensure Limited English Proficient (LEP) persons have meaningful access to its programs and activities. Executive Order 13379 Individuals with Disabilities in Emergency Preparedness, requires the government to support safety and security for individuals with disabilities in situations involving disasters, including earthquakes, tornadoes, fires, floods, hurricanes, and acts of terrorism.

I. The sub-recipient hereby certifies that for its employees, it has an Affirmative Action Plan/Equal Employment Opportunity Plan (EEOP) if not exempted by the Federal Government or New Mexico rule or statute. An EEOP is not required for sub-recipients of less than $25,000 or fewer than 50 employees.

J. The sub-recipient hereby certifies that its employees are eligible to work in the United States as verified by Form I–9, Immigration & Naturalization Service Employment Eligibility.

K. The sub-recipient hereby agrees that it is the responsibility of the sub-recipient to fully understand and comply with the requirements of the following, where such requirements apply to the sub-recipient set forth in:

1. 2 C.F.R. § 200: Code of Federal Regulations
2. 44 C.F.R. parts 7, 9, 10, 13, 14, 17, 18, 25, 206, 220, 221, 44 C.F.R. Part 209, 2 C.F.R. Part 200 and any other applicable FEMA policy memoranda and guidance documents
3. FEMA Hazard Mitigation Assistance Program and Policy Guide
4. New Mexico State Procurement Code
   New Mexico Administrative Code Title 2 – Public Finance https://www.srca.nm.gov/nmac-home/nmac-titles/title-2-public-finance/

ARTICLE 2: REIMBURSEMENT OF FUNDS

The NMDHSEM will apply the following procedures for making payments to sub-recipients:

A. Payment of Funds, General: Once FEMA has obligated funds and NMDHSEM has budgeted and encumbered those funds, the Cabinet Secretary is authorized to advance funds, as permissible, and to consider requests for payments for progress and completion based on proper review and approvals, in accordance with the sub-grant agreement or amendment as described below. Review and audit of expending and accounting of federal awards and state funds will be conducted to ensure records, reports, and documentation for compliance and tracing of funds are accounted for; 2 C.F.R. §§ 200.302(b)(6), 200.305(a). The State Department of Finance and Administration (DFA) may require additional supporting data and documents prior to disbursement of funds.

B. Reimbursement shall be based upon authorized and allowable expenditures consistent with the project narrative, grant guidelines, and timely submission of Financial and Performance Progress Reports. Reimbursement of expenditures shall be requested quarterly or monthly if need be for expenditures within the performance period. A minimum of 25% (of the total project cost) in the non-federal match must be included on each request for reimbursement. All expenditures must be supported with source documentation (e.g., copies of proof of payment, invoices, receipts, timesheets

with name/rate/hours and certified, breakdown of expenditures based on FEMA approved budget, warrants, a brief description of work done, required deliverables, etc.). Request for reimbursement will not be processed if quarterly financial or performance reports are delinquent. The final payment of 15% will not be made until DHSEM verifies that all activities are complete. All payments shall be made on an actual cost reimbursement basis.

C. Contracts: All requests for proposals/bids, sole–source procurements, single vendor responses to a competitive bid, and contracts require DHSEM pre–approval prior to implementation. The relevant contract must accompany requests for reimbursement for contractual services.

D. Local Match: Local matching funds must clearly support the source, the amount, and the timing of all matching contributions. When requesting reimbursement, the match percentage must be shown on each invoice. Copies of proof of payment, invoices, receipts, purchase orders, timesheets with name/wage/hours, cost allocation, general ledger, warrants, etc., must be submitted as a backup for the match.

E. Non-reimbursable Expenses:

- Transfer of funds between any programs. Contracts, single vendor response to a competitive bid, sole source contracts, and any procurement documentation not pre-approved by DHSEM.
- Training and related travel costs not pre-approved by DHSEM.
- Supplanting (using federal funds to purchase items previously budgeted for with state or local funds).
- Maintenance and/or wear and tear costs of general use vehicles and emergency response apparatus.
- Equipment purchased for an exercise cannot be used for permanent installation and/or beyond the scope of an exercise.
- Weapons and ammunition.
- Entertainment and sporting events
- Personal items such as laundry, personal hygiene items, magazines, in-room movies, personal travel, and personal phone calls.
- Travel insurance, visa, and passport charges.
- Lodging costs in excess of State per diem, as appropriate.
- Lunch when travel is wholly within a single day.
- Standalone working meals.
- Bar charges, alcoholic beverages.
- Finance, late fees, or interest charges.
- Lobbying, political contributions, and legislative liaison activities.
- Organized fundraising, including salaries of persons while engaged in these activities.
- Expenditures not supported with appropriate documentation when submitted for reimbursement. Only properly documented expenditures will be processed for payment. Unsupported expenditures will be returned to the jurisdiction for resubmission.

F. **Payment Conditions.** The sub-recipient must certify that in requesting and accepting a sub-grant payment, they have spent those funds on eligible expenditures; that the work performed was within the scope of work allowed for specific projects; and that all records pertinent to specific projects will be retained for at least the periods required under record retention regulation requirements from the closeout of the last project. The period of record retention for grant and financial data is three years if state funds are paid.

G. **Delays and Denial of Payment.** Reasons for delays in FEMA processing of payment requests include, but are not limited to, the following:

- Vendor identification number is missing or incorrect;
- Disaster and project number is missing;
- Period of performance (POP) listed is incorrect;
- Service delivery dates do not agree with invoices or outside of contract period;
- Dollar amount on forms do not agree;
- Mathematical errors;
- Full address of sub-grantee is not included;
- Sub-recipient did not provide required back-up documentation; or

Reasons for NMDHSEM declining payment requests include, but are not limited to, the following:

- The POP has expired;
- The amount exceeds the remaining funding available for disbursement prior to the final financial and program compliance reviews (the hold or funding retention amount);
- Request for payment requires a state and/or budget amendment, and cannot be processed until the amendment request is received/approved;
- The reimbursement requested is for an activity outside of the approved scope of work;
- Forms are not signed by an authorized person, or are signed by only one signatory;
- Reimbursement of awarded funds have been suspended due to a non-compliance issue such as failure to submit quarterly reports; or
- Reimbursements of awarded funds have been suspended due to noncompliance activities.

Sub-recipients can reduce the likelihood of delays in processing of payment requests by checking for accuracy prior to submission.

ARTICLE 3: AUDITING AND REPORTING REQUIREMENTS

A. Quarterly Reports. In accordance with 2 C.F.R. § 200.328, the Applicant shall submit quarterly reports to the NMDHSEM beginning with the first full quarter after the signature date on the Sub-recipient Grant Agreement. The NMDHSEM will provide sub-recipient a form for this report. Quarterly reports are due no later than the 15th of the month following the end of the quarter - January 15, April 15, July 15, and October 15.

In order that NMDHSEM may adequately evaluate the progress and status of each sub-grant, quarterly reports shall contain a description of the work accomplished to date, the methods and procedures used, the anticipated completion date, a summary of all project costs to date, and other such information as may be of assistance in its evaluation of the project.

Reports shall be sent to the Department of Homeland Security & Emergency Management, Recovery Unit, P.O. Box 27111, Santa Fe, NM 87502, or electronically to DHSEM.mitigation@dhsem.nm.gov.

B. Additional Reporting Requirements. The sub-recipient must immediately report in writing to the NMDHSEM Mitigation Unit any alleged acts or allegations of fraud or misappropriation of funds for work authorized under this Sub-recipient Grant Agreement. This extends to reporting any legal action, lawsuit, bankruptcy, or other action that may jeopardize the successful completion of any authorized project. Additional reporting and financial reconciliation requirements may also be requested at NMDHSEM and FEMA's request. Failure to comply with these requests may jeopardize funding and may be a breach of this Sub-recipient Grant Agreement.

C. Enforcement. The NMDHSEM may suspend drawdowns, impose other special conditions, or take other authorized action pursuant to 2 C.F.R. § 200.339 (Remedies for Noncompliance) if the sub-recipient does not submit accurate and timely reports. This may include, among other things, the

administrative closeout of a grant and/or any projects under a grant when the sub-recipient is not responsive to reasonable efforts NMDHSEM makes to collect required reports needed to complete closeout. Administrative closeout is a unilateral mechanism by NMDHSEM to move forward with project or grant closeout using available grant information in lieu of final reports. This can require NMDHSEM to make cash or cost adjustments and ineligible cost determinations, which may result in identifying a debt owed to FEMA and/or NMDHSEM.

D. Financial Procedures. The sub-recipient agrees to maintain financial procedures and support documents and to establish and maintain a proper accounting system to record expenditures of disaster assistance funds in accordance with generally accepted accounting principles or as directed by the Governor's Authorized Representative, to account for the receipt and expenditure of funds under this Agreement. If applicable, RECIPIENT / SUBGRANTEE shall conduct audit(s) pursuant to the Single Audit Act of 1984, 31 U.S.C. § 7501 et. seq., 44 C.F.R. Part 14, 2 C.F.R. Part 200, 0MB Circular A-133, "Audits of States, Local Governments, and Non-profit Organizations," and applicable New Mexico laws, rules and regulations. Further, sub-recipient must provide a hard copy of the Single Audit Report within sixty (60) days of the close of its fiscal year. Otherwise, pursuant to 44 C.F.R. § 13.43, NMDHSEM may withhold or suspend payments under any grant award.

The sub-recipient shall retain all financial records, supporting documents, statistical records, and any other documents pertinent to this contract for a period of five years after the date of submission of the final expenditures report. However, if litigation or an audit has been initiated prior to the expiration of the three-year period, the records shall be retained until the litigation or audit findings have been resolved.

E. Authorizing Statute. This award is made under the provisions of the Robert T. Stafford Disaster Relief and Emergency Assistance Act, Pub. L. No. 93-288 (1974) (codified as amended at 42 U.S.C. §§ 5121-5207) (Stafford Act), in accordance with 44 C.F.R. § 206.44.
All scopes of work and costs approved as a result of this Sub-recipient Grant Agreement, whether as estimates or final costs approved through subawards, PWs, or otherwise, will incorporate by reference the terms of this Sub-recipient Grant Agreement and must comply with applicable laws, regulations, policy, and guidance in accordance with this Sub-recipient Grant Agreement.

Pursuant to Executive Order 13858 Strengthening Buy-American Preferences for Infrastructure Projects, FEMA encourages recipients to use, to the greatest extent practicable and consistent with the law, iron and aluminum as well as steel, cement, and other manufactured products produced in the United States in Public Assistance and HMGP eligible public infrastructure repair and construction projects affecting surface transportation, ports, water resources including sewer and drinking water, and power. Such preference must be consistent with the law, including cost and contracting requirements at 2 C.F.R. Part 200.

F. Additional Terms and Conditions. The following additional sub-grant agreement documents are fully incorporated into this Sub-recipient Grant Agreement and thereby constitute additional terms and conditions of this agreement.

- The Stafford Act, its implementing regulations contained in Title 44 of the C.F.R., and FEMA policy and guidance.
- **Hazard Mitigation Assistance Guide (March 2023)**
- The Uniform Administrative Requirements, Cost Principles, and Audit Requirements for Federal Awards set forth at 2 C.F.R. Parts 200 and 3002.
- Attachment 1 United States Department of Homeland Security (USDHS) Standard Terms and Conditions (January 24, 2022) in effect on the date of the Declaration which are incorporated by reference into this Sub-recipient Grant Agreement

- Attachment 2 Reimbursement Checklist
- Attachment 3 Glossary and Definitions
- Attachment 4 Acronyms

ARTICLE 4: SCOPE OF WORK

A. As authorized by the Robert T. Stafford Disaster Relief and Emergency Assistance Act (the Stafford Act), as amended (42 U.S.C. § 5121 et seq.), and Section 662 of the Post Katrina Emergency Reform Act of 2006, as amended (6 U.S.C. § 762), the **City of Santa Fe** has been awarded funds for the Hazard Mitigation Plan Update and Wildlife Risk Assessment Project. Funds shall be utilized as outlined in the approved budget as awarded by FEMA on **July 23,2024**. The Sub Recipient shall match the Federal Award Amount of **$124,574.82** with a local jurisdictional amount of **$38,934.25** for a total project cost of **$163,509.07**. All work performed pursuant to this agreement must comply with the approved FEMA application. All work must be completed within the performance period, between **July23,2024 – November 14,2027.** The **City of Santa Fe** shall not sub-grant any part of this award to any other entity or organization. Within the first reporting quarter, all awards require confirmation that expenditures in the budget category toward this project will be made. If not, DHSEM may execute a de-obligation of Federal funds without recourse by the **City of Santa Fe.**

B. Approved projects must commence within the first reporting quarter. If a project cannot commence and be operational within the first reporting quarter of the approved award date, the sub–Recipient must submit a written statement to DHSEM, signed by the sub-recipient signatory officials, justifying the delay in implementation, the expected starting date, and a formal request to extend the project start date past the first reporting quarter. At the sole discretion of DHSEM, the grant award is subject to cancellation, and funds may be de-obligated and reallocated to other projects.

ARTICLE 5: PUBLICATIONS

A. Publications created with funding under this grant shall prominently contain the following statement or a DHSEM pre-approved modification: **This Document was prepared under a sub-grant from the FEDERAL EMERGENCY MANAGEMENT AGENCY, and the NEW MEXICO DEPARTMENT OF HOMELAND SECURITY AND EMERGENCY MANAGEMENT. Points of view or opinions expressed in this document are those of the authors and do not necessarily represent the official position or policies of the Federal Emergency Management Agency and the New Mexico Department of Homeland Security and Emergency Management.**

ARTICLE 6: PERFORMANCE PERIODS

The performance period for this sub-grant award is **July 23,2024 – November 14,2027.** Further, all personnel-related grant activity must be completed between **July 23,2024 – November 14,2027.** Funds may not be obligated outside of these time periods. An obligation occurs when funds are encumbered, as with a purchase order and/or commitment of salaries and benefits**. All obligated and encumbered funds *must be liquidated* within 45 days of the end of the performance period when the *Final Progress and Financial Reports* are due**.

ARTICLE 7: RECOVERY OF FUNDS FOR DUPLICATION OF BENEFITS AND INELIGIBLE ACTIVITIES

A. Ineligible Activities. The FEMA and/or NMDHSEM may disallow costs and recover funds based on the results of audit or review during or after performance of the award to ensure compliance with the terms of the Sub-recipient Grant Agreement and award document. The FEMA and/or NMDHSEM is required to recover funds when the sub-recipient has ineligible underruns (for example, actual costs for a PA large project are less than the amount awarded based on initial estimates); knowingly or negligently withholds

or misrepresents material information; fails to complete work and comply with the terms of this Sub-recipient Grant Agreement or the approved award; expends federal funds in error; or incurs costs that are unreasonable or otherwise disallowed. If, after exhaustion of appeal rights, FEMA and/or NMDHSEM determines a debt is owed, the State has 30 days to resolve the amount owed before the debt is referred to the FEMA Finance Center for collection. The State may do so by directly paying FEMA. The State may also deposit the amount owed directly into the applicable subaccount in U.S. Health and Human Services (HHS)/Smartlink and notify FEMA when it has reimbursed that subaccount, after which FEMA will de-obligate that amount in the subaccount. Alternatively, the sub-recipient may request to substitute unallowable costs for other costs that are allowable (e.g., necessary, allocable, and reasonable under the same award and have not yet been reimbursed by FEMA).

B. Duplication of Benefits. In accordance with the provisions of 42 U.S.C. § 5155 (Section 312 of the Stafford Act), duplication of benefits is prohibited. The NMDHSEM must take all actions necessary and reasonable to ensure that all who receive federal assistance are aware of their responsibility to repay federal assistance that is duplicated by amounts available from insurance or any other source for the same purpose. The FEMA and/or NMDHSEM may at any time, pre-award or post-award, adjust the level of funding provided to account for financial assistance provided from any other source for the same purpose as the federal assistance or to account for benefits available for the same purpose from another source, irrespective of whether they are actually received. The sub-recipient shall notify NMDHSEM, as soon as practicable, of the existence of any insurance coverage for the costs identified in the application and of any entitlement to or recovery of funds from any other source for the project costs, including Small Business Administration funding, United States Department of Agriculture (USDA), and other Federal, State, and private funding. The amount of duplicate sources available shall reduce allowable costs. The sub-recipient shall be liable to NMDHSEM to the extent that the sub-recipient receives duplicate benefits from any other source for the same purposes for which the sub-recipient has received payment from the NMDHSEM.

C. Cooperation. The NMDHSEM agrees, on its behalf and on behalf of its political subdivisions and others that receive federal assistance, to cooperate with the Federal Government in seeking recovery of federal assistance against any party or parties whose intentional acts or omissions or whose negligence or other tortious conduct may have caused or contributed to the damage or hardship for which federal assistance was provided under this Sub-recipient Grant Agreement. If applicable, FEMA will treat recovered funds as duplicated benefits available to NMDHSEM/sub-recipient in accordance with Section 312 of the Stafford Act (codified as amended at 42 U.S.C. § 5155).

D. NMDHSEM Responsibilities. The NMDHSEM is responsible for recovering federal assistance expended in error, misrepresentation, fraud, or for costs otherwise disallowed or unused.

a. The NMDHSEM must notify FEMA of any potential debt as a result of federal funds expended in error, misrepresentation, fraud, or for costs otherwise disallowed or unused.

b. The NMDHSEM must report all cases of suspected fraud to the USDHS Office of Inspector General. The NMDHSEM must cooperate with any investigation conducted by the USDHS Office of Inspector General. The NMDHSEM must cooperate with FEMA regarding any and all lawsuits that may result from the NMDHSEM or FEMA's attempt to recover funds or disallow costs.

E. Statute of Limitations. The 3-year statute of limitations limiting FEMA's ability to initiate an administrative action to recover funds paid as provided for in Section 705(a) of the Stafford Act (codified as amended at 42 U.S.C. § 5205(a)) begins with:

a. Initiation of an Administrative Action to Recover Payment. The initiation of an administrative action to recover payment includes FEMA's written notice to the NMDHSEM or a sub-recipient of a questioned or disallowed cost or improper payment (including a request for information

concerning such cost or payment) and written notice to the NMDHSEM or a sub-recipient of a FEMA or 3rd party review or audit.

F. Refunds, Rebates, and Credits. The NMDHSEM must transfer to FEMA the appropriate share, based on the federal support percentage, of any refund, rebate, credit or other amounts arising from the performance of this Sub-recipient Grant Agreement. The NMDHSEM must take necessary action to promptly collect all monies due or which may become due and if applicable, to cooperate with the Federal Government in any claim or suit in connection with amounts due.

G. Non-Compliant Sub-recipients. As per 2 C.F.R. §§ 200.207, 200.303(d) and 200.338(A-F), NMDHSEM can selectively use any or all the following remedies and prompt actions for non-compliance with any term of an award to include audit finding(s):

- **a.** Increased monitoring of projects and require additional financial and performance reports.
- **b.** Disallow advance payment process.
- **c.** Temporarily withhold payments pending correction of the deficiency.
- **d.** Disallow or deny use of funds and matching credit for all or part of the cost of the activity or action not in compliance.
- **e.** Request FEMA to completely or partially de-obligate funding for a project.
- **f.** Temporarily withhold payments pending correction of the deficiency by the sub-recipient.
- **g.** Withhold further awards for the grant program.
- **h.** Take other programmatic or legally available remedies.

ARTICLE 8: CONSTRUCTION REQUIREMENTS

A. The NMDHSEM must ensure that all applicable federal, state, and local permits and approvals are obtained, and all permit conditions are addressed before the start of any construction activity, including FEMA and NMDHSEM/sub-recipient compliance with the National Environmental Policy Act, the National Historic Preservation Act, the Endangered Species Act, and all other applicable environmental laws and executive orders. All construction should be in accordance with approved permits, projects plans and specifications, applicable building codes, and program guidance.

ARTICLE 9: NATIONAL ENVIRONMENTAL POLICY ACT (NEPA)/ENVIRONMENTAL PLANNING AND HISTORIC PRESERVATION (EHP) COMPLIANCE

A. The sub-recipient must provide information to FEMA the legally required environmental planning and historic preservation (EHP) review and to ensure compliance with the applicable EHP laws and Executive Orders (EO). These EHP requirements include but are not limited to National Environmental Policy Act, National Historic Preservation Act, Endangered Species Act, E 11988 Floodplain Management, EO 11990 Protection of Wetlands, and EO 12898 Environmental Justice. The sub-recipient must comply with all federal, state, local, tribal, and territorial EHP requirements and obtain applicable permits and clearances.

B. Sub-recipients shall not undertake any activity from the project that would result in ground disturbance, facility modification, or relates to the use of sonar equipment without the prior approval of FEMA. These include but are not limited to communications towers, physical security enhancements involving ground disturbance, new construction, and modifications to buildings that are 50 years old or older, and exercises. The sub-recipient must comply with all mitigation or treatment measures required for the project as the result of FEMA's EHP review. An EHP Screening Form does not need to be provided for those exercises that are planned to take place at previously approved facilities, such as, fire and police academies, search and rescue training facilities, and explosive testing centers. Any type of exercise that requires any type of land, water, or vegetation disturbance or building of temporary structures must undergo an EHP review.

C. Any change to an approved project description will require re-evaluation for compliance with EHP requirements before the project can proceed. If ground disturbing activities occur during project implementation, the sub-recipient must ensure monitoring of ground disturbance and if any potential archeological resources are discovered, the sub-recipient will immediately cease construction in that area and notify NMDHSEM, FEMA and the New Mexico Historic Preservation Division. Initiation of these activities prior to completion of FEMA's EHP review will result in a non-compliance finding and may result in ineligibility of grant funding.

ARTICLE 10: PROPERTY AND EQUIPMENT MANAGEMENT

A. The sub-recipient will follow the property standards articulated in 2 C.F.R. § 200.310 through 2 CFR 200.326. The sub-recipient shall, when practical, prominently display the following on any equipment purchased with award funds: **PURCHASED WITH FUNDS PROVIDED BY THE FEDERAL EMERGENCY MANAGEMENT AGENCY.** No equipment purchased with these grant funds may be assigned to other entities or organizations without the expressed approval in writing from DHSEM prior to the jurisdiction's encumbrance or expenditure for that equipment.

B. The subrecipient will follow the property standards articulated in 2 C.F.R. § 200.310 through 2 C.F.R. § 200.326. The subrecipient shall maintain an effective property management system; safeguards to prevent loss, damage or theft; maintenance procedures to keep equipment in good condition; and disposition procedures. A Property Inventory Report shall be submitted to NMDHSEM annually each January 30 with the Financial Progress Report during the performance period, and continued submission is required annually until final disposition of the equipment. The subrecipient shall, when practical, prominently display the following on any equipment purchased with award funds: Purchased with funds provided by the U.S. Department of Homeland Security. No equipment purchased with these grant funds may be assigned to other entities or organizations without the expressed approval in writing from NMDHSEM, prior to the jurisdiction's encumbrance or expenditure for that equipment.

C. Any disposition of property or equipment must be in accordance with 2 C.F.R. § 200.313(e) and pre-approved by FEMA through NMDHSEM.

ARTICLE 11: SUBRECIPIENT MONITORING POLICY

A. In accordance with 2 C.F.R. § 200.328, NMDHSEM may periodically monitor a sub-recipient's projects to ensure that program goals, objectives, timelines, budgets, and other related program criteria are being met. The NMDHSEM reserves the right to periodically review and conduct analysis of the sub-recipient's financial, programmatic, and administrative policies and procedures. This monitoring may include review of accounting for receipts and expenditures, cash management, maintaining adequate financial records, means of allocating and tracking costs, contracting, procurement, records management, payroll, means of allocating staff costs, property and equipment management system, progress of project activities, etc. This may include unscheduled desk audits and field inspections. The sub-recipient shall accommodate all such requests within reason. If the sub-recipient encounters any unanticipated problem with the Scope of Work, allowed costs, procurement, permitting, or other difficulty, the sub-recipient must communicate that problem to NMDHSEM promptly. Work on affected projects must be suspended until the problem is resolved. Technical assistance is available from NMDHSEM staff.

B. The sub-recipient will immediately, no later than 24-hours upon notice, report to NMDHSEM allegations of wrong-doing on the part of any contractor, sub-contractor, agent or employee of the sub-recipient, or other interested party in reference to the work authorized under this Sub-recipient Grant Agreement. This extends to any legal action, lawsuit, bankruptcy, or other action that may jeopardize the successful completion of any authorized project.

ARTICLE 12: PROCUREMENT

A. Procurement shall comply with all federal, state, and local procurement requirements including 2 C.F.R. § 200.320 and the New Mexico Procurement Code for expenditure of funds under this Agreement. The Applicant must conform to applicable state and federal law and the Procurement Standards Sections 2 C.F.R. § 200.317-326, and Appendix II. Contractors that develop or draft specifications, requirements, Statements of Work, and/or Requests for Proposals (RFP) for a proposed procurement shall be excluded from bidding or submitting a proposal to compete for the award of such procurement. Local bidder's preference is not allowed for federally funded procurements. Procurement transactions shall be conducted to provide maximum open and free competition.

B. When procuring property and services under this agreement, the sub-recipient will follow 2 C.F.R. § 200.318 through 2 C.F.R. § 200.326 and Appendix II. The sub-recipient must use its own documented procurement procedures which reflect applicable state, local, tribal, and territorial laws, and regulations, provided that the procurements conform to applicable federal law and the standards identified in 2 C.F.R. § 200. As such, the sub-recipient must use one of the methods of procurement identified in 2 C.F.R. § 200.320.

C. Also, per 2 C.F.R. § 200.318(i), subrecipients are required to maintain and retain records sufficient to detail the history of procurement covering at least the rationale for the procurement method, selection of contract type, contractor selection or rejection, and the basis for the contract price. States and territories are encouraged to maintain and retain this information as well and are reminded that in order for any cost to be allowable, it must be adequately documented per 2 C.F.R. § 200.403(g). Examples of the types of documents that would cover this information include but are not limited to:

- **a.** Solicitation documentation, such as requests for quotes, invitations for bids, or requests for proposals;
- **b.** Responses to solicitations, such as quotes, bids, or proposals;
- **c.** Pre-solicitation independent cost estimates and post-solicitation cost/price analyses on file for review by federal personnel, if applicable;
- **d.** Contract documents and amendments, including required contract provisions; and
- **e.** Other documents required by federal regulations applicable at the time a subgrant is awarded to a subrecipient.

D. Procurement from Minority Owned and Women Owned Business is encouraged and must be tracked and reported to NMDHSEM on the quarterly reports. Procurement transactions shall be conducted to provide maximum open and free competition. Each sole–source procurement single vendor response to a competitive bid, and all purchases require prior approval of NMDHSEM.

E. The sub-recipient will follow the property standards articulated in 2 C.F.R. § 200.310 through 2 C.F.R. § 200.326. The sub-recipient shall maintain an effective property management system; safeguards to prevent loss, damage or theft; maintenance procedures to keep equipment in good condition; and disposition procedures. Property and equipment records shall be maintained for a period of three years following the final disposition, replacement or transfer of the property and equipment.

ARTICLE 13: CONTRACTS

A. Contractors that develop or draft specifications, requirements, Statements of Work, and/or Requests for Proposals (RFP) for a proposed procurement shall be excluded from bidding or submitting a proposal to compete for the award of such procurement. Local bidder's preference is not allowed for federally funded procurements. Procurement transactions shall be conducted to provide maximum open and free

competition. Each sole–source procurement, single vendor response to a competitive bid, and all purchases require prior approval of DHSEM.

B. Any contract shall comply with the requirements of Procurement Standards Sections of 28 C.F.R. Parts 66 and 70, 2 C.F.R. Part 200 and OMB Circulars A–102 "Uniform Administrative Requirements for Grants and Cooperative Agreements with State and Local Governments" for expenditure of Federal funds under this Sub-recipient Grant Agreement. Applicants shall submit procurement and contracts to NMDHSEM for review prior to approval. Contracts for professional services must meet applicable local, state, and federal requirements. All contractors must be licensed in New Mexico for the type of work that is required. Prior to any contracted work beginning, the sub-recipient shall provide NMDHSEM with a copy of the contractor's license. Contract work must not exceed the scope of work and PW awarded amount prescribed by FEMA, unless requested through a scope of work change and approval from FEMA.

C. Any contract entered during this sub-grant period shall comply with local, State, and Federal government contracting regulations. Professional and consultant services contracts must include local, State, and Federal government-required contract language, a project budget, SOW, and a pay schedule. ***All contracts require pre-approval by DHSEM prior to execution.*** Contract deliverables must meet the intent of the grant application and grant requirements. Justification is required for compensation for individual consultant services, which must be reasonable and consistent with the amount paid for similar services in the marketplace. Detailed invoices and time and effort reports are required for consultants.

ARTICLE 14: COMPETITION AND CONFLICTS OF INTEREST

A. Among the requirements of 2 C.F.R. § 200.319(b) applicable to all non-federal entities other than states, in order to ensure objective contractor performance and eliminate unfair competitive advantage, contractors that develop or draft specifications, requirements, statements of work, or invitations for bids or requests for proposals must be excluded from competing for such procurements. The FEMA considers these actions to be an organizational conflict of interest and interprets this restriction as applying to contractors that help a subrecipient develop its grant application, project plans or project budget. This prohibition also applies to the use of former employees to manage the grant or carry out a contract when those former employees worked on such activities while they were employees of the non-federal entity.

B. Under this prohibition, unless the subrecipient solicits for and awards a contract covering both development and execution of specifications (or similar elements as described above), and this contract was procured in compliance with 2 C.F.R. §§ 200.317 – 200.327, federal funds cannot be used to pay a contractor to carry out the work if that contractor also worked on the development of those specifications. This rule applies to all contracts funded with federal grant funds, including pre-award costs, such as grant writer fees, as well as post-award costs, such as grant management fees. Additionally, some of the situations considered to be restrictive of competition include, but are not limited to:

- **a.** Placing unreasonable requirements on firms for them to qualify to do business;
- **b.** Requiring unnecessary experience and excessive bonding;
- **c.** Noncompetitive pricing practices between firms or between affiliated companies;
- **d.** Noncompetitive contracts to consultants that are on retainer contracts;
- **e.** Organizational conflicts of interest;
- **f.** Specifying only a "brand name" product instead of allowing "an equal" product to be offered and describing the performance or other relevant requirements of the procurement; and
- **g.** Any arbitrary action in the procurement process.

C. Per 2 C.F.R. § 200.319(c), the subrecipient must conduct procurements in a manner that prohibits the use of statutorily or administratively imposed state, local, tribal, or territorial geographical preferences in the evaluation of bids or proposals, except in those cases where applicable federal statutes expressly mandate or encourage geographic preference. Nothing in this section preempts state licensing laws. **When**

contracting for architectural and engineering services, geographic location may be a selection criterion, provided its application leaves an appropriate number of qualified firms, given the nature and size of the project, to compete for the contract.

D. Under 2 C.F.R. § 200.318(c)(1), the subrecipient is required to maintain written standards of conduct covering conflicts of interest and governing the actions of their employees engaged in the selection, award, and administration of contracts. **No employee, officer, or agent may participate in the selection, award, or administration of a contract supported by a federal award if he or she has a real or apparent conflict of interest.** Such conflicts of interest would arise when the employee, officer or agent, any member of his or her immediate family, his or her partner, or an organization that employs or is about to employ any of the parties indicated herein, has a financial or other interest in or a tangible personal benefit from a firm considered for a contract. The non-federal entity's officers, employees, and agents may neither solicit nor accept gratuities, favors, or anything of monetary value from contractors or parties to subcontracts. However, subrecipient entities may set standards for situations in which the financial interest is not substantial, or the gift is an unsolicited item of nominal value. The standards of conduct must provide for disciplinary actions to be applied for violations of such standards by officers, employees, or agents of the non-federal entity.

E. Under 2 C.F.R. § 200.318(c)(2), if the subrecipient has a parent, affiliate, or subsidiary organization that is not a state, local, tribal or territorial government, the subrecipient must also maintain written standards of conduct covering organizational conflicts of interest. In this context, organizational conflict of interest means that because of a relationship with a parent company, affiliate, or subsidiary organization, the subrecipient is unable or appears to be unable to be impartial in conducting a procurement action involving a related organization. The non-federal entity must disclose in writing any potential conflicts of interest to FEMA or NMDHSEM in accordance with applicable FEMA policy.

ARTICLE 15: CONTRACTS

A. Contracts for professional and consultant services executed during this grant period must include federal, state, local, tribal, and territorial government required contract language, a project budget, and require pre-approval by NMDHSEM prior to implementation. Contract deliverables must meet the intent of the grant application and grant requirements. Justification is required for compensation for individual consultant services, which must be reasonable and consistent with the amount paid for similar services in the marketplace. Detailed invoices and time and effort reports are required for consultants. *See* 2 C.F.R. § 200.1, 2 C.F.R. § 200 Appendix II to Part 200.

ARTICLE 16: AUDIT REQUIREMENTS

A. As a federal grant recipient, the State of New Mexico requires a sub-recipient expending $750,000 or more in federal funds in the organization's fiscal year to conduct an organization–wide audit in accordance with the Single Audit described in 2 C.F.R. § 200.501. The sub-recipient will permit state or federal officials and auditors to have access to sub-recipient and contractor records and financial statements as necessary for the state to comply with 2 C.F.R. § 200.501. Copies of audit findings must be submitted to NMDHSEM within 30 days after the sub-recipient receives its audit report, or within a 9-month period of the grant closeout date, whichever is earlier. Include the federal agency name, program, grant number, the CFDA title and number, and the name of the pass-through agency (NMDHSEM) in all documents.

ARTICLE 17: RECORDS RETENTION

A. Records Retention.

a. **State Requirement.** The State must retain records for three years after all projects are complete and the federal disaster is formally closed out, except in certain rare circumstances described in 2 C.F.R. § 200.334 (Retention requirements for records), from the date it submits the final Federal Financial Report (SF-425) to FEMA in compliance with 2 C.F.R. § 200.334. If FEMA administratively closes the grant where no final SF-425 was submitted, FEMA uses the date the grant was administratively closed as the start date for the three-year record retention period.

b. **Sub-recipient Requirement.** The sub-recipients must retain project or subaward records for at least three years from the date that the NMDHSEM submits to FEMA the final expenditure report for a project or subaward. If, however, there is any litigation, claim, negotiation, audit, request for information, or other action involving the project or subaward that starts before that date, the records must be retained until completion of the action and resolution of all issues which arise from it, or until the end of the three-year period, whichever is later.

c. The sub-recipient will follow the record retention and access standards articulated in 2 C.F.R. § 200.333 through 2 C.F.R. § 200.337. The grant financial and administrative records shall be maintained for a period of three years following the date of the closure of the grant award, or audit if required. Time and effort, personnel and payroll records for all individuals reimbursed under the award must be maintained. Property and equipment records shall be maintained for a period of three years following the final disposition, replacement or transfer of the property and equipment.

d. The sub-recipient will be required to maintain project records until the expiration of the appropriate retention period. This includes records related to Management Costs, procurement, contracting, accounts payable, engineering, inventory, force account (materials, labor, and equipment), insurance settlements or other records related to the project scope of work. Retention procedures are outlined in the Hazard Mitigation Assistance Grant Programs Administrative Plan.

ARTICLE 18: CHANGES TO AWARD

A. All change requests must be submitted either in writing or electronically to the NMDHSEM contact for review 90 days prior to the termination of this Sub-recipient Grant Agreement. All change requests must be accompanied by a justification narrative and a budget and spending plan. All change requests must be consistent with the scope of the project and grant guidelines. Change requests will be considered only if reporting requirements are current, and all other terms and conditions of this Sub-recipient Grant Agreement have otherwise been met at the time of the request. If approved by NMDHSEM and FEMA, changes in the programmatic activities, purpose of the project, key personnel specified on the grant award, contractual services for activities central to the purposes of the award, change in project site, or release of special conditions, will result in an amendment to this award. Requests for changes must be formally submitted to NMDHSEM and FEMA.

B. Changes to this Sub-recipient Grant Agreement will be made via a Sub-recipient Grant Agreement Amendment. The NMDHSEM will prepare each Amendment when needed. No Sub-recipient Grant Agreement Amendment is valid until fully executed.

ARTICLE 19: REMEDIES FOR NONCOMPLIANCE

A. For the reasons listed below, special conditions may be imposed, reimbursements may be partially or wholly withheld, the award may be wholly or partly suspended or terminated, or future awards, reimbursements and award modifications may be withheld. The NMDHSEM may institute the following, but is not limited to, withholding authority to proceed to the next phase of a project, requiring additional or more detailed

financial reports, additional project monitoring, and/or establish additional prior approvals. The NMDHSEM shall notify the sub-recipient of its decision in writing stating the nature and the reason for imposing the conditions/restrictions, the corrective action required and timeline to remove them, and the method of requesting reconsideration of the imposed conditions/restrictions. The sub-recipient must respond within five days of receipt of notification.

a. Unwillingness or inability to attain project goals or scope of work.
b. Unwillingness or inability to adhere to Special Conditions of this Sub-recipient Grant Agreement.
c. Failure or inability to adhere to grant guidelines and federal compliance requirements.
d. Improper procedures regarding contracts and procurements.
e. Failure to submit reliable and/or timely reports.
f. Fiscal management which does not meet reasonable professional standards.
g. Failure or inability to adhere to the terms and conditions of this Sub-recipient Grant Agreement.
h. Unwillingness or inability to obtain permits required by law to perform the eligible work.
i. Noncompliance with any and all federal, state, local and tribal grant requirements.

B. The NMDHSEM shall notify the sub-recipient of any non-compliance issues in writing and shall attempt to arrive at a resolution in a timely and reasonable fashion. If corrective action is required, NMDHSEM and the sub-recipient shall determine a timeline and landmarks for remediation. The NMDHSEM may require additional detailed financial reports or additional project monitoring. The ultimate penalty for non-compliance with the terms and conditions of this Sub-recipient Grant Agreement is for payments to be withheld or for the award to be suspended or terminated. The sub-recipient agrees to make restitution if necessary.

C. The NMDHSEM may take action as it determines appropriate under the circumstances including but not limited to withholding of payments, disallowance of costs, suspension or termination of the award if the sub-recipient fails to comply with applicable Federal and State statutes, regulations, or the terms of this Sub-recipient Grant Agreement pursuant to 2 C.F.R. § 200.339.

D. Nothing in this section abrogates the sub-recipient's right of appeal.

ARTICLE 20: TERMINATION

A. **For Cause:** In compliance with 2 C.F.R. § Part 200.340(a)(1), if performance is not occurring as agreed, the award may be reduced or terminated without compensation for reduction or termination costs. The NMDHSEM will provide notice of five days to the subrecipient stating the reasons for the action, steps taken to correct the problems, and the commencement date of the reduction or termination. The NMDHSEM will reimburse the subrecipient only for acceptable work or deliverables, necessary and allowable costs incurred through the date of reduction or termination. Final payment may be withheld at the discretion of NMDHSEM until completion of a final NMDHSEM review. Disposition of any equipment acquired under a terminated grant must be in accordance with 2 C.F.R. § 200.313(e).

B. **For Convenience:** In compliance with 2 CFR Part 200.340(a)(4), this Agreement may be terminated without cause by the subrecipient upon written notice setting forth the reasons for such termination, and the effective date at least 30 days prior to the intended date of termination. A termination pursuant to this provision does not nullify a party's obligations for performance, or liabilities for failure to perform already incurred prior to the date of termination. Any project may be terminated upon convenience, in whole or in part, for the convenience of the subrecipient; though a partial termination notification must specify that portion of the project which is to be terminated. Allowable costs obligated and/or incurred through the date of termination shall be reimbursed. Disposition of any equipment acquired under a terminated grant must be in accordance with 2 C.F.R. § 200.313(e).

ARTICLE 21: CLOSEOUT OF SUB-GRANT

A. Closeout of Projects. Per 2 C.F.R. § 200.344, sub-recipients must submit all cost and supporting documentation for completed projects. The NMDHSEM will review and verify all costs and supporting documents to validate compliance. Failure to comply will result in de-obligation of the project. The NMDHSEM will close each sub-recipient file once it has conducted full review and approval of all supporting documents for compliance and all projects are completed and has project activity closed out.

a. Management Costs. Management Costs will be used for internal staff salaries, contractor payments and other support costs associated with this grant. This will be in accordance with all laws, rules, and FEMA regulations. Management Costs will be processed in accordance with the Hazard Mitigation Assistance Program and Policy Guide.

The NMDHSEM commits to closeout of all grants regardless of the availability of management costs.

ARTICLE 22: SPECIAL CONDITIONS

A. The terms of this Sub-recipient Grant Agreement are contingent upon sufficient appropriations and authorizations being made by the USDHS FEMA under the Robert T. Stafford Disaster Relief and Emergency Assistance Act U.S.C. §§ 5121-5207. If sufficient appropriations and authorizations are not made by FEMA this Sub-recipient Grant Agreement shall terminate immediately upon written notice being given by NMDHSEM to the sub-recipient. The decision of NMDHSEM shall be final.

B. If NMDHSEM proposes an Amendment to the Sub-recipient Grant Agreement to unilaterally reduce funding, the sub-recipient shall have the option to terminate the Sub-recipient Grant Agreement or agree to the reduced funding within 30 days of receipt of the proposed Amendment.

C. Each party shall be solely responsible for fiscal or other sanctions occasioned because of its own violation of requirements applicable to the performance of this Sub-recipient Grant Agreement. Each party shall be liable for its own actions or inactions in accordance with state law and nothing herein shall be deemed a waiver, indemnity or to otherwise create or effect liabilities between the parties.

D. The grant award amount is a funding allocation and is not to be interpreted as expenditure authorizations or approvals.

E. All awarded projects must be planned for, conducted, budgeted, and expended within the designated performance period.

F. Quarterly financial and progress reports are due on October 15, January 15, April 15, and July 15, within the POP. Final reports are due 15 days after the end of POP.

G. All revision requests must be reviewed and approved by NMDHSEM staff. All requests must meet the original scope of the project which may result in a sub-recipient grant amendment.

H. A revision of a project's SOW must be pre-approved by NMDHSEM staff before the jurisdiction can proceed with the request for approval process. If the revision is approved, NMDHSEM staff may request additional documentation to proceed with recommendation to NMDHSEM Leadership for final approval.

I. The beneficiary of this award is solely responsible for all expenditures that are incurred outside of the award performance period. All expenditures that are incurred above and beyond the amount of this Sub-recipient Grant Agreement are the sole responsibility of the sub-recipient of this award.

J. Procurement from Minority Owned and Women Owned Business is encouraged and must be tracked and reported to NMDHSEM on the quarterly reports.

K. Upon completion of all awarded projects, any remaining funds will be de-obligated and reverted to NMDHSEM for return to FEMA.

L. Extensions due to exigent or emergency circumstances will be determined by NMDHSEM on a case-by-case basis.

State of New Mexico
Department of Homeland Security & Emergency Management
P.O. Box 27111
Santa Fe, NM 87502

The acceptance of a subgrant from the United States and the State of New Mexico creates a legal duty and obligation on the part of the sub-recipient to use the funds or property made available in accordance with the conditions of the grant as administered by and through the New Mexico Department of Homeland Security and Emergency Management. By signing this obligating award document, the sub-recipient certifies it has read, understood, and accepted these documents as binding.

SUB-RECIPIENT GRANT AGREEMENT
Signatures of Acceptance

SUB-GRANT NO:	**DR-4652-0011-NM**		
JURISDICTION GRANT PROGRAM MANAGER PRINTED NAME:			
OFFICIAL SIGNATURE:		**DATE:**	
CONTACT NUMBER:		**E-MAIL ADDRESS:**	
JURISDICTION CHIEF FINANCIAL OFFICER PRINTED NAME:			
OFFICIAL SIGNATURE:		**Date:**	
CONTACT NUMBER:		**E-MAIL ADDRESS:**	
JURISDICTION SIGNATORY OFFICIAL PRINTED NAME:			
OFFICIAL SIGNATURE:		**DATE:**	
CONTACT NUMBER:		**E-MAIL ADDRESS:**	
NMDHSEM MITIGATION PROGRAM BUREAU CHIEF PRINTED NAME:			
NMDHSEM MITIGATION PROGRAM BUREAU CHIEF OFFICIAL SIGNATURE / DATE:			
NMDHSEM GRANTS MANAGEMENT BUREAU CHIEF PRINTED NAME:			
NMDHSEM GRANTS MANAGEMENT BUREAU CHIEF OFFICIAL SIGNATURE / DATE:			
NMDHSEM DEPUTY CABINET SECRETARY OFFICIAL PRINTED NAME:			
NMDHSEM DEPUTY CABINET SECRETARY OFFICIAL SIGNATURE / DATE:			

Print one original agreement, sign and email to: DHSEM.MITIGATION@DHSEM.nm.gov

CITY OF SANTA FE:

_____
ALAN WEBBER, MAYOR

DATE:_____

ATTEST:

_____
CITY CLERK

CITY ATTORNEY'S OFFICE:

_____
ASSISTANT CITY ATTORNEY

APPROVED FOR FINANCES:

Emily K. Oster 11/01/2024
_____
FINANCE DIRECTOR

The page is intentionally left blank.

ATTACHMENT 1
USDHS Standard Terms and Conditions
(January 24, 2022)

The Fiscal Year (FY) 2022 USDHS Standard Terms and Conditions apply to all new federal financial assistance awards funded in FY 2022. These terms and conditions flow down to sub-recipients unless an award term or condition specifically indicates otherwise. The United States has the right to seek judicial enforcement of these obligations.

All legislation and digital resources are referenced with no digital links. The FY 2022 USDHS Standard Terms and Conditions will be housed on dhs.gov at www.dhs.gov/publication/fy15-dhs- standard-terms-and-conditions.

A. Assurances, Administrative Requirements, Cost Principles, Representations and Certifications

I. USDHS financial assistance recipients must complete either the Office of Management and Budget (OMB) Standard Form 424B Assurances – Non-Construction Programs, or OMB Standard Form 424D Assurances – Construction Programs, as applicable. Certain assurances in these documents may not be applicable to your program, and the USDHS financial assistance office (USDHS FAO) may require applicants to certify additional assurances. Applicants are required to fill out the assurances as instructed by the awarding agency.

II. USDHS financial assistance recipients are required to follow the applicable provisions of the Uniform Administrative Requirements, Cost Principles, and Audit Requirements for Federal Awards located at Title 2, Code of Federal Regulations (C.F.R.) Part 200 and adopted by USDHS at 2 C.F.R. Part 3002.

III. By accepting this Agreement, recipients, and their executives, as defined in 2 C.F.R. § 170.315, certify that their policies are in accordance with OMB's guidance located at 2 C.F.R. Part 200, all applicable federal laws, and relevant Executive guidance.

B. General Acknowledgements and Assurances

All recipients, sub-recipients, successors, transferees, and assignees must acknowledge and agree to comply with applicable provisions governing USDHS access to records, accounts, documents, information, facilities, and staff.

I. Recipients must cooperate with any USDHS compliance reviews or compliance investigations conducted by USDHS.

II. Recipients must give USDHS access to examine and copy records, accounts, and other documents and sources of information related to the federal financial assistance award and permit access to facilities or personnel.

III. Recipients must submit timely, complete, and accurate reports to the appropriate USDHS officials and maintain appropriate backup documentation to support the reports.

IV. Recipients must comply with all other special reporting, data collection, and evaluation requirements, as prescribed by law, or detailed in program guidance.

V. Recipients (as defined in 2 C.F.R. Part 200 and including recipients acting as pass-through entities) of federal financial assistance from USDHS or one of its awarding component agencies must complete the USDHS Civil Rights Evaluation Tool within thirty (30) days of receipt of the Notice of Award for the first award under which this term applies. Recipients of multiple awards of USDHS financial assistance should only submit one completed tool for their organization, not per award. After the initial submission, recipients are required to complete the tool once every two (2) years if they have an active award, not every time an award is made. Recipients should submit the completed tool, including supporting materials, to CivilRightsEvaluation@hq.dhs.gov. This tool clarifies the civil rights obligations and related reporting requirements contained in the USDHS

Standard Terms and Conditions. Sub-recipients are not required to complete and submit this tool to USDHS. The evaluation tool can be found at https://www.dhs.gov/publication/dhs- civil-rights-evaluation-tool.

The USDHS Office for Civil Rights and Civil Liberties will consider, in its discretion, granting an extension if the recipient identifies steps and a timeline for completing the tool. Recipients should request extensions by emailing the request to CivilRightsEvaluation@hq.dhs.gov prior to expiration of the 30-day deadline.

C. Standard Terms & Conditions

I. Acknowledgement of Federal Funding from USDHS

Recipients must acknowledge their use of federal funding when issuing statements, press releases, requests for proposal, bid invitations, and other documents describing projects or programs funded in whole or in part with federal funds.

II. Activities Conducted Abroad

Recipients must ensure that project activities performed outside the United States are coordinated as necessary with appropriate government authorities and that appropriate licenses, permits, or approvals are obtained.

III. Age Discrimination Act of 1975

Recipients must comply with the requirements of the Age Discrimination Act of 1975, Public Law 94-135 (1975) (codified as amended at Title 42, U.S. Code, § 6101 et seq.), which prohibits discrimination on the basis of age in any program or activity receiving federal financial assistance.

IV. Americans with Disabilities Act of 1990

Recipients must comply with the requirements of Titles I, II, and III of the Americans with Disabilities Act, Pub. L. 101-336 (1990) (codified as amended at 42 U.S.C. §§ 12101– 12213), which prohibits recipients from discriminating on the basis of disability in the operation of public entities, public and private transportation systems, places of public accommodation, and certain testing entities.

V. Best Practices for Collection and Use of Personally Identifiable Information

Recipients who collect personally identifiable information (PII) are required to have a publicly available privacy policy that describes standards on the usage and maintenance of the PII they collect. USDHS defines PII as any information that permits the identity of an individual to be directly or indirectly inferred, including any information that is linked or linkable to that individual. Recipients may also find the USDHS Privacy Impact Assessments: Privacy Guidance and Privacy Template as useful resources respectively.

VI. Civil Rights Act of 1964 – Title VI

Recipients must comply with the requirements of Title VI of the Civil Rights Act of 1964 (codified as amended at 42 U.S.C. § 2000d et seq.), which provides that no person in the United States will, on the grounds of race, color, or national origin, be excluded from participation in, be denied the benefits of, or be subjected to discrimination under any program or activity receiving federal financial assistance. USDHS implementing regulations for the Act are found at 6 C.F.R. Part 21 and 44 C.F.R. Part 7.

VII. Civil Rights Act of 1968

Recipients must comply with Title VIII of the Civil Rights Act of 1968, Pub. L. 90-284, as amended through Pub. L. 113-4, which prohibits recipients from discriminating in the sale, rental, financing, and advertising of dwellings, or in the provision of services in connection therewith, on the basis of race, color, national origin, religion, disability, familial status, and sex (see 42 U.S.C. § 3601 et seq.), as implemented by the U.S. Department of Housing and Urban Development at 24 C.F.R. Part 100. The prohibition on disability discrimination includes the requirement that new multifamily housing with four or more dwelling units—i.e., the public and common use areas and individual apartment units (all units in buildings with elevators and ground-floor units in buildings without elevators)—be designed and constructed with certain accessible features. (See 24 C.F.R. Part 100, Subpart D.)

VIII. Copyright

Recipients must affix the applicable copyright notices of 17 U.S.C. §§ 401 or 402 and an acknowledgement of U.S. Government sponsorship (including the award number) to any work first produced under federal financial assistance awards.

IX. Debarment and Suspension

Recipients are subject to the non-procurement debarment and suspension regulations implementing Executive Orders (E.O.) 12549 and 12689, which are at 2 C.F.R. Part 180 as adopted by USDHS at 2 C.F.R. Part 3002. These regulations restrict federal financial assistance awards, subawards, and contracts with certain parties that are debarred, suspended, or otherwise excluded from or ineligible for participation in federal assistance programs or activities.

X. Drug-Free Workplace Regulations

Recipients must comply with drug-free workplace requirements in Subpart B (or Subpart C, if the recipient is an individual) of 2 C.F.R. Part 3001, which adopts the Government-wide implementation (2 C.F.R. Part 182) of Sec. 5152-5158 of the Drug-Free Workplace Act of 1988 (41 U.S.C. §§ 8101-8106).

XI. Duplication of Benefits

Any cost allocable to a particular federal financial assistance award provided for in 2 C.F.R. Part 200, Subpart E may not be charged to other federal financial assistance awards to overcome fund deficiencies; to avoid restrictions imposed by federal statutes, regulations, or federal financial assistance award terms and conditions; or for other reasons. However, these prohibitions would not preclude recipients from shifting costs that are allowable under two or more awards in accordance with existing federal statutes, regulations, or the federal financial assistance award terms and conditions may not be charged to other federal financial assistance awards to overcome fund deficiencies; to avoid restrictions imposed by federal statutes, regulations, or federal financial assistance award terms and conditions; or for other reasons.

XII. Education Amendments of 1972 (Equal Opportunity in Education Act) – Title IX

Recipients must comply with the requirements of Title IX of the Education Amendments of 1972, Pub. L. 92-318 (1972) (codified as amended at 20 U.S.C. § 1681 et seq.), which provide that no person in the United States will, on the basis of sex, be excluded from participation in, be denied the benefits of, or be subjected to discrimination under any educational program or activity receiving federal financial assistance. USDHS implementing regulations are codified at 6 C.F.R. Part 17 and 44 C.F.R. Part 19.

XIII. Energy Policy and Conservation Act

Recipients must comply with the requirements of the Energy Policy and Conservation Act, Pub. L. 94- 163 (1975) (codified as amended at 42 U.S.C. § 6201 et seq.), which contain policies relating to energy efficiency that are defined in the state energy conservation plan issued in compliance with this Act.

XIV. Ensuring the Future is Made in All of America by All of America's Workers

Recipients must comply with the "Build America, Buy America" provisions of the Infrastructure Investment and Jobs Act and E.O. 14005 which provide that, as appropriate and to the extent consistent with law, the recipient must use all practicable means within their authority under a federal award to provide a preference for the purchase, acquisition, or use of goods, products, or materials produced in the United States (including but not limited to iron, aluminum, steel, cement, and other manufactured products.)

XV. False Claims Act and Program Fraud Civil Remedies

Recipients must comply with the requirements of the False Claims Act, 31 U.S.C. §§3729- 3733, which prohibit the submission of false or fraudulent claims for payment to the Federal Government. (See 31 U.S.C. §§ 3801-3812, which details the administrative remedies for false claims and statements made.)

XVI. Federal Debt Status

All recipients are required to be non-delinquent in their repayment of any federal debt. Examples of relevant debt include delinquent payroll and other taxes, audit disallowances, and benefit overpayments. (See OMB Circular A-129.)

XVII. Federal Leadership on Reducing Text Messaging while Driving

Recipients are encouraged to adopt and enforce policies that ban text messaging while driving as described in E.O. 13513, including conducting initiatives described in Section 3(a) of the Order when on official government business or when performing any work for or on behalf of the Federal Government.

XVIII. Fly America Act of 1974

Recipients must comply with Preference for U.S. Flag Air Carriers (air carriers holding certificates under 49 U.S.C.) for international air transportation of people and property to the extent that such service is available, in accordance with the International Air Transportation Fair Competitive Practices Act of 1974, 49 U.S.C. § 40118, and the interpretative guidelines issued by the Comptroller General of the United States in the March 31, 1981, amendment to Comptroller General Decision B-138942.

XIX. Hotel and Motel Fire Safety Act of 1990

Recipients must ensure that all conference, meeting, convention, or training space funded in whole or in part with federal funds complies with the fire prevention and control guidelines of Section 6 of the Hotel and Motel Fire Safety Act of 1990, 15 U.S.C. § 2225a.

XX. John S. McCain National Defense Authorization Act of Fiscal Year 2019

Recipients, sub-recipients, and their contractors and subcontractors are subject to the prohibitions described in section 889 of the John S. McCain National Defense Authorization Act for Fiscal Year 2019, Pub. L. No. 115-232 (2018) and 2 C.F.R. §§ 200.216, 200.327, 200.471, and Appendix II to 2 C.F.R. Part 200. Beginning August 13, 2020, the statute – as it applies to USDHS recipients, sub-recipients, and their contractors and subcontractors – prohibits obligating or expending federal award funds on certain telecommunications and video surveillance products

and contracting with certain entities for national security reasons.

XXI. Limited English Proficiency (Civil Rights Act of 1964, Title VI)

Recipients must comply with Title VI of the Civil Rights Act of 1964, (42 U.S.C. § 2000d et seq.) prohibition against discrimination on the basis of national origin, which requires that recipients of federal financial assistance take reasonable steps to provide meaningful access to persons with limited English proficiency (LEP) to their programs and services. For additional assistance and information regarding language access obligations, please refer to the USDHS Recipient Guidance: https://www.dhs.gov/guidance- published-help- department- supported-organizations-provide-meaningful-access-people-limited and additional resources on http://www.lep.gov.

XXII. Lobbying Prohibitions

Recipients must comply with 31 U.S.C. § 1352, which provides that none of the funds provided under a federal financial assistance award may be expended by the recipient to pay any person to influence, or attempt to influence an officer or employee of any agency, a Member of Congress, an officer or employee of Congress, or an employee of a Member of Congress in connection with any federal action related to a federal award or contract, including any extension, continuation, renewal, amendment, or modification.

XXIII. National Environmental Policy Act

Recipients must comply with the requirements of the National Environmental Policy Act of 1969, (NEPA) Pub. L. 91-190 (1970) (codified as amended at 42 U.S.C. § 4321 et seq. and the Council on Environmental Quality (CEQ) Regulations for Implementing the Procedural Provisions of NEPA, which require recipients to use all practicable means within their authority, and consistent with other essential considerations of national policy, to create and maintain conditions under which people and nature can exist in productive harmony and fulfill the social, economic, and other needs of present and future generations of Americans.

XXIV. Nondiscrimination in Matters Pertaining to Faith-Based Organizations

It is USDHS policy to ensure the equal treatment of faith-based organizations in social service programs administered or supported by USDHS or its component agencies, enabling those organizations to participate in providing important social services to beneficiaries. Recipients must comply with the equal treatment policies and requirements contained in 6 C.F.R. Part 19 and other applicable statues, regulations, and guidance governing the participations of faith-based organizations in individual USDHS programs.

XXV. Non-Supplanting Requirement

Recipients receiving federal financial assistance awards made under programs that prohibit supplanting by law must ensure that federal funds do not replace (supplant) funds that have been budgeted for the same purpose through non-federal sources.

XXVI. Notice of Funding Opportunity Requirements

All the instructions, guidance, limitations, and other conditions set forth in the Notice of Funding Opportunity (NOFO) for this program are incorporated here by reference in the award terms and conditions. All recipients must comply with any such requirements set forth in the program NOFO.

XXVII. Patents and Intellectual Property Rights

Recipients are subject to the Bayh-Dole Act, 35 U.S.C. § 200 et seq, unless otherwise provided by law. Recipients are subject to the specific requirements governing the development, reporting, and disposition of rights to inventions and patents resulting from federal financial assistance awards located at 37 C.F.R. Part 401 and the standard patent rights clause located at 37 C.F.R. § 401.14.

XXVIII. Procurement of Recovered Materials

States, political subdivisions of states, and their contractors must comply with Section 6002 of the Solid Waste Disposal Act, Pub. L. 89-272 (1965), (codified as amended by the Resource Conservation and Recovery Act, 42 U.S.C. § 6962.) The requirements of Section 6002 include procuring only items designated in guidelines of the Environmental Protection Agency (EPA) at 40 C.F.R. Part 247 that contain the highest percentage of recovered materials practicable, consistent with maintaining a satisfactory level of competition.

XXIX. Rehabilitation Act of 1973

Recipients must comply with the requirements of Section 504 of the Rehabilitation Act of 1973, Pub. L. 93-112 (1973), (codified as amended at 29 U.S.C. § 794,) which provides that no otherwise qualified handicapped individuals in the United States will, solely by reason of the handicap, be excluded from participation in, be denied the benefits of, or be subjected to discrimination under any program or activity receiving federal financial assistance.

XXX. Reporting of Matters Related to Recipient Integrity and Performance General Reporting Requirements.

If the total value of any currently active grants, cooperative agreements, and procurement contracts from all federal awarding agencies exceeds $10,000,000 for any period of time during the period of performance of this federal award, then the recipients must comply with the requirements set forth in the government-wide Award Term and Condition for Recipient Integrity and Performance Matters located at 2 C.F.R. Part 200, Appendix XII, the full text of which is incorporated here by reference in the award terms and conditions.

XXXI. Reporting Subawards and Executive Compensation Reporting of first tier subawards.

Recipients are required to comply with the requirements set forth in the government-wide award term on Reporting Subawards and Executive Compensation located at 2 C.F.R. Part 170, Appendix A, the full text of which is incorporated here by reference in the award terms and conditions.

XXXII. SAFECOM

Recipients receiving federal financial assistance awards made under programs that provide emergency communication equipment and its related activities must comply with the SAFECOM Guidance for Emergency Communication Grants, including provisions on technical standards that ensure and enhance interoperable communications.

XXXIII. Terrorist Financing

Recipients must comply with E.O. 13224 and U.S. laws that prohibit transactions with, and the provisions of resources and support to, individuals and organizations associated with terrorism. Recipients are legally responsible to ensure compliance with the Order and laws.

XXXIV. Trafficking Victims Protection Act of 2000 (TVPA) Trafficking in Persons.

Recipients must comply with the requirements of the government-wide financial assistance award term which implements Section 106 (g) of the Trafficking Victims Protection Act of 2000 (TVPA), codified as amended at 22 U.S.C. § 7104. The award term is located at 2 C.F.R. § 175.15,

the full text of which is incorporated here by reference.

XXXV. Universal Identifier and System of Award Management

Requirements for System for Award Management and Unique Entity Identifier Recipients are required to comply with the requirements set forth in the government-wide financial assistance award term regarding the System for Award Management and Universal Identifier Requirements located at 2 C.F.R. Part 25, Appendix A, the full text of which is incorporated here by reference.

XXXVI. USA PATRIOT Act of 2001

Recipients must comply with requirements of Section 817 of the Uniting and Strengthening America by Providing Appropriate Tools Required to Intercept and Obstruct Terrorism Act of 2001 (USA PATRIOT Act), which amends 18 U.S.C. §§ 175–175c.

XXXVII. Use of USDHS Seal, Logo and Flags

Recipients must obtain permission from their USDHS FAO prior to using the USDHS seal(s), logos, crests or reproductions of flags or likenesses of USDHS agency officials, including use of the United States Coast Guard seal, logo, crests or reproductions of flags or likenesses of Coast Guard officials.

XXXVIII. Whistleblower Protection Act

Recipients must comply with the statutory requirements for whistleblower protections (if applicable) at 10 U.S.C § 2409, 41 U.S.C. § 4712, and 10 U.S.C. § 2324, 41 U.S.C. §§ 4304 and 4310.

The remainder of this page is intentionally left blank.

ATTACHMENT 2
Reimbursement Checklist

DHSEM reserves the right to update this check list throughout the life of the grant to ensure compliance with applicable federal and state rules and regulations. ***Please only check the categories that apply to the reimbursement you are currently requesting.***

EQUIPMENT

- ☐ Have all invoices been included?
- ☐ Has AEL # been identified for each purchase?
- ☐ If service/warranty expenses are listed, are they only for the performance period of the grant?
- ☐ Has proof of payment been included? (e.g., canceled check, Electronic Funds Transfer (EFT) confirmation, or P-Card back up documentation which will include receipt with vendor, copy of credit card statement showing expense charged, and payment to credit card Company for that statement)

CONSULTANTS/CONTRACTORS

- ☐ Does the amount billed by consultant add up correctly?
- ☐ Has all appropriate documentation to denote hours worked been properly signed?
- ☐ Have copies of all planning materials and work product (e.g., meeting documents, copies of plans) been included? (If a meeting was held by recipient or contractor/consultant of recipient, an agenda and signup sheet with meeting date must be included).
- ☐ Has the invoice from consultant/contractor been included?
- ☐ Has proof of payment been included? (e.g., canceled check, Electronic Funds Transfer (EFT) confirmation, or P-Card back up documentation which will include receipt with vendor, copy of credit card statement showing expense charged, and payment to credit card Company for that statement).

SALARY POSITIONS (Note: this applies to positions billed under M&A)

- ☐ Have the following been provided: signed time sheet by employee and supervisor and proof that employee was paid for time worked (statement of earnings, copy of payroll check or payroll register)?
- ☐ Has a time period summary sheet been included for total claimed amount?
- ☐ Has a general ledger payroll report been included for total claimed amount? Ensure this report includes both employee and employer payroll information (i.e., benefits/contributions).
- ☐ Does the back-up documentation include a copy of the check stub per employee for the time period covered?
- ☐ Does the back-up documentation provided match the time period for which reimbursement is being requested?

OTHER:

- ☐ If EHP form needed – has copy of it and approval from USDHS/FEMA been included?

MATCHING FUNDS (IF APPLICABLE)

- ☐ Contributions are from Non-Federal funding sources.
- ☐ Contributions are from cash or in-kind contributions which may include training investments.
- ☐ Contributions are not from salary, overtime, or other operational costs unrelated to training.

This page is intentionally left blank.

ATTACHMENT 3
Glossary and Definitions

Applicant: When an entity applies for PA funding, it is the **Applicant**. Once the Applicant receives funding, it is either the **recipient, pass-through entity,** or a **sub-recipient**.

Authorized Equipment List (AEL): The Authorized Equipment List (AEL) is a list of approved equipment types allowed under FEMA's preparedness grant programs.

Backfill: The act of filling a position left by another employee who has been moved to another role.

Cost Match: Recipient or sub-recipient contribution. This can be cash (hard match) or third party in-kind (soft match). 2 C.F.R. 200.306.

Cost Sharing or Matching: The portion of project costs not paid by federal funds or contributions (unless otherwise authorized by federal statute). 2 C.F.R. 200.1 Cost sharing or matching.

Declared fire: An uncontrolled fire or fire complex, threatening such destruction as would constitute a major disaster, which the FEMA Regional Administrator has approved in response to a state's request for a fire management assistance declaration and in accordance with the criteria listed in 44 C.F.R. 204.21. Fire Management Assistance Declaration Criteria.

Disallowed costs: Those charges to a federal award that the federal awarding agency or pass-through entity determines to be unallowable, in accordance with the applicable federal statutes, regulations, or the terms and conditions of the federal award. 2 C.F.R. 200.1 Disallowed costs.

Demobilization: The process and procedures for deactivating, disassembling, and transporting back to their point of origin all resources that had been provided to respond to and support a declared fire.

Disaster: An emergency condition affecting all or part the state, overwhelming local resources, in which there is likely to be a significant recovery period. The Governor may request a Robert T. Stafford Act (Stafford Act) Disaster Declaration through FEMA, asking for the Public Assistance Program, Fire Management Assistance Program, Individual Assistance Program and Mitigation based upon known and estimated damage assessment data.

Disaster Recovery Reform Act of 2018 (DRRA): The DRRA represents the most comprehensive Emergency Management reform since the Post-Katrina Emergency Management Reform Act in 2006. It includes a larger and more reliable funding stream for pre-disaster mitigation, expanded assistance for individuals and households, and support for states, localities, tribes, and territories (SLTTs) to develop their own emergency management capabilities.

Emergency: A condition in which local and state emergency response agencies are overwhelmed by an incident to the point that federal assistance is needed. Unlike a disaster, an emergency does not have a recovery phase. The Governor may request a Stafford Act Emergency Declaration through FEMA, asking for the Public Assistance Program and/or Fire Management Assistance Grant.

Emergency Work: Work which must be done before, during and immediately after a disaster event to save lives and to protect improved property and public health and safety or to avert or lessen the threat of a major disaster. The FEMA Public Assistance emergency work Categories are:

- Category A (Debris Removal)
- Category B (Emergency Protective Measures)

Equipment: Tangible personal property (including information technology systems) having a useful life of more than one year and a per-unit acquisition cost which equals or exceeds the lesser of the capitalization level established by the non-federal entity for financial statement purposes, or $5,000. 2 C.F.R. 200.1 Equipment.

*Expenditures***:** Charges made by a non-federal entity to a project or program for which a federal award was received. 2 C.F.R. 200.1 Expenditures.

Federal Award: The federal financial assistance that a recipient receives directly from a federal awarding agency or indirectly from a pass-through entity. 2 C.F.R. 200.1 Federal award.

Federal Emergency Management Agency (FEMA): The federal agency responsible for coordinating disaster recovery efforts in partnership with state, local, and tribal governments.

Federal Share: The portion of the federal award costs that are paid using federal funds. 2 C.F.R. 200.1 Federal share.

FEMA/State Agreement: A formal, legal document between FEMA and the state or a tribal government giving the understandings, commitments, terms, conditions, and timelines for assistance resulting from a federal disaster, emergency, or fire declaration, declared by the President.

Governor's Authorized Representative (GAR): The person designated by the Governor to execute all necessary documents for disaster assistance programs on behalf of the state and local grant recipients. The GAR is responsible for state compliance with the FEMA/State Agreement. The GAR may also be designated as the State Coordinating Officer.

Hazard Mitigation: Mitigation is the effort to reduce loss of life and property by lessening the impact of disasters.

Hazard Mitigation (Sections 404 and 406): Section 406 Mitigation measures are specific to the mechanism of the declared disaster and are an integral part of the reconstructed work on a facility or will protect or benefit the repaired portion of the facility. These are different from mitigation measures that are considered for eligibility under the Hazard Mitigation Grant Program (HMGP) of Section 404 of the Stafford Act. In the HMGP program, measures are proposed that may involve facilities other than those damaged by the disaster, new facilities, or even non-structural measures such as the development of floodplain management regulations.

Incident Period: The time interval during which the declared disaster occurs. The Regional Administrator, in consultation with the Governor's Authorized Representative and the Principal Advisor will establish the incident period. Generally, costs must be incurred during the incident period to be considered eligible.

The declaration designates the incident period. The incident period is the span of time during which the federally declared incident occurs. This period varies in length, depending on the incident.

Improved Project: When performing restoration work on a damaged facility, a sub-recipient may use the opportunity to make improvements to the facility. Projects that incorporate such improvements are improved projects. The improved facility must have the same function and at least the equivalent capacity as that of the pre-disaster facility. Federal funding for improved projects is limited to the lesser of the following: the federal share of the approved estimated costs to restore the damaged facility to its pre-disaster design and function or the federal share of the actual cost of completing the improved project. The sub-recipient must obtain FEMA approval, via the NMDHSEM, for an improved project prior to

construction.

Indirect Costs: Costs a recipient or sub-recipient incurs for a common or joint purpose benefitting more than one cost objective that are not readily assignable to the cost objectives specifically benefited.

Joint Field Office (JFO): A temporary facility established in or near a declared disaster area to serve as the field headquarters for FEMA, other federal and state recovery personnel, and serve as the focal point for federal disaster operations, direction, coordination, and information.

Large Project: An approved project estimated to cost the same as or more than the large project threshold amount. The large project threshold is a dollar amount adjusted annually to reflect changes in the Consumer Price Index for all urban consumers. The large project threshold amount, applicable to all projects, is the amount in effect on the declaration date of the disaster, regardless of when project approval is made or when the work is performed.

Management Costs: Management costs are any indirect costs, any direct administrative costs, and any other administrative expenses associated with the administration of HMA awards and subawards. Management costs are provided under HMGP, HMGP Post Fire, BRIC and FMA. For the Hazard Mitigation Grant Program (HMGP) and Hazard Mitigation Grant Program Post Fire (HMGP Post Fire), recipients will be reimbursed no more than 15% of the total amount of the award, of which not more than 10% may be used by the recipient and 5% by the subrecipient. Under HMGP and HMGP Post Fire, recipients' Administrative Plans must include procedures for monitoring and reporting on subrecipient management costs before receiving funding for management costs. For Building Resilient Infrastructure and Communities (BRIC) and Flood Mitigation Assistance (FMA), recipients may apply for a maximum of 10% of the total funds requested in their application cost estimate (federal and non-federal shares) for management costs to support the sub-applications included as part of their award. Subapplicants for BRIC and FMA may apply for a maximum of 5% of the total funds requested in a sub-application for management costs. Additional information is available in FEMA Policy #104-11-1, Hazard Mitigation Grant Program Management Costs (Interim).

Pass-through Entity: A non-federal entity that provides a subaward to a sub-recipient to carry out part of a federal program. 2 C.F.R. 200.1 Pass through entity (PTE).

Performance Period for Hazard Mitigation Assistance: The period of time stipulated in the Sub-recipient Grant Agreement, as amended, during which the sub-recipient must finish the approved work. Projects completed after the active Period of Performance deadline will be considered ineligible.

Quarterly Financial Progress Report: The information in this report is used by NMDHSEM to monitor sub-recipient cash flow, performance, and project implementation to ensure proper use of federal funds.

Recipient: Formally referred to as the grantee or sub-grantee or applicant. Federally Recognized Indian Tribal Governments may also be Recipients if they so desire and if they meet FEMA requirements.

Recovery Officer: Aids in the administration of disaster recovery grant programs for statewide disasters and emergencies. Coordinates and co-administers disaster recovery grant programs, ensuring that they are implemented and carried out according to state and federal program requirements.

Recovery Unit: This is the unit within the NMDHSEM Response and Recovery Bureau designated as responsible for the programmatic administration of the FEMA PA and FMAG Programs.

Recovery Unit Manager: Responsible for administering and supervising staff responsible for federal and state disaster recovery programs and serves as the Deputy State Coordinating Officer (SCO) for

emergencies or major disaster declarations.

Response & Recovery Bureau Chief: Responsible for supervising staff responsible for federal and state disaster recovery programs and staff that provides operational response capabilities to support the citizens of New Mexico. This position also serves as State Coordinating Officer (SCO) for emergencies or major disaster declarations.

Request for Approval Form: Used by sub-recipient to request approval from NMDHSEM to expend funds for previously identified and approved projects. Approval must be received prior to expenditure.

Small Project: An approved project estimated to cost less than the large project threshold amount.

State Coordinating Officer (SCO): The person designated by the Governor to coordinate state and local disaster assistance efforts with those of the federal government. The GAR may also be the SCO. The Governor will name the GAR and the SCO in the FEMA/State Agreement.

Sub-recipient: Formally referred to as the sub-grantee or applicant, is a state agency, local government, tribal government, other legal governmental entity, or a private non-profit (PNP) organization that receives a sub-grant award and which is accountable to the state for the use of the funds provided. The FEMA reserves the final decision as to sub-recipient eligibility.

Supplanting: When a state or unit of local government reduces state or local funds for an activity specifically because federal funds are available (or expected to be available) to fund that same activity. When supplanting is not permitted, federal funds must be used to **supplement** existing state or local funds for program activities and may not replace state or local funds that have been appropriated or allocated for the same purpose. Additionally, federal funding may not replace state or local funding that is required by law. If a question of supplanting arises, the sub-recipient or grantee will be required to substantiate that the reduction in non-federal resources occurred for reasons other than the receipt or expected receipt of federal funds. US Department of Justice Office of Justice Programs, Grants 101.

The remainder of this page is intentionally left blank.

ATTACHMENT 4
Acronyms

AEL: Authorized Equipment List
AGAR: Alternate Governor's Authorized Representative
ASB: Administrative Services Bureau of NMDHSEM
CFDA: Catalog of Federal Domestic Assistance
DAC: Direct Administrative Costs
DOT: Department of Transportation
DPS: Department of Public Safety
DRRA: Disaster Recovery Refo1m Act of 2018
DSCO: Deputy State Coordinating Officer
DSIBD: Deputy State Infrastructure Branch Director
DSPAGS: Deputy State Public Assistance Group Supervisor
EMAC: Emergency Management Assistance Compact
EMMIE: Emergency Management Mission Integrated Environment
EMNRD: Energy, Minerals and Natural Resources Department
FEMA: Federal Emergency Management Agency
FFATA- Federal Funding Accountability and Transparency Act
FMAG - Fire Management Assistance Grant
GAR: Governor's Authorized Representative
IMAS: Intrastate Mutual Aid System
INF: Immediate Needs Funding
IOF: Initial Operating Facility
JFO: Joint Field Office
NSPO: Net Small Project Overrun
NMDHSEM: New Mexico Department of Homeland Security and Emergency Management
ONA: Other Needs Assistance
OMB: Office of Management and Budget
PA: Public Assistance
PAGS: Public Assistance Group Supervisor
PAPPG: Public Assistance Program and Policy Guide
PDA: Preliminary Damage Assessment
PDMG: Program Delivery Manager
PIO: Public Information Officer
PNP: Private Non-Profit
POP: Period of Performance
PW: Project Worksheet
R&R: Response & Recovery Bureau
REC: Record of Environmental Consideration
RO: Recovery Officer
RP A - Request for Public Assistance
SCO: State Coordinating Officer
SOW: Scope of Work
SHARE: New Mexico Statewide Human Resources, Accounting, and Management Reporting System

SIBD: State Infrastructure Branch Director
SPAGS: State Public Assistance Group Supervisor
SPAO: State Public Assistance Officer
USDHS: United States Department of Homeland Security
USFS: US Forest Service
VFO: Virtual Field Office

The remainder of this page is intentionally left blank.

2023_HMGP_SGA_HazardMitigationPlan

Final Audit Report 2024-10-02

Created:	2024-10-02
By:	JULIE KENNY (jckenny@santafenm.gov)
Status:	Signed
Transaction ID:	CBJCHBCAABAAPILoCCyJ_K5S32r5PWYAV5Zcob1IKO6d

"2023_HMGP_SGA_HazardMitigationPlan" History

Document created by JULIE KENNY (jckenny@santafenm.gov)
2024-10-02 - 2:52:50 PM GMT- IP address: 63.232.20.2

Document emailed to Rebecca Mnuk-Herrmann (ramnukherrmann@santafenm.gov) for signature
2024-10-02 - 2:53:31 PM GMT

Email viewed by Rebecca Mnuk-Herrmann (ramnukherrmann@santafenm.gov)
2024-10-02 - 3:42:01 PM GMT- IP address: 104.47.64.254

Document e-signed by Rebecca Mnuk-Herrmann (ramnukherrmann@santafenm.gov)
Signature Date: 2024-10-02 - 3:42:21 PM GMT - Time Source: server- IP address: 63.232.20.2

Agreement completed.
2024-10-02 - 3:42:21 PM GMT

Powered by Adobe Acrobat Sign

City of Santa Fe New Mexico

Finance Department

Project Ledger Request Form

Date of Request: 9/17/2024

Project Title: HAZARD MITIGATION PLAN & WILDFIRE RISK ASSESSMENT

Project Type: ☐ CIP ☑ Grant ☐ Internal Tracking

Project ID: OEM2522101

Grant ID: S2533/F2512

Approved By: _____

CT (Finance Use Only)

Department: OEM Project Manager: KYLE MORGAN Ext: 6704

Project Date Range: 7/23/2024 to 11/14/2027 ☐ Create Fixed Asset

---

☑ Multi-Funding (complete all funding sources, should equal 100%)

Funding Source: DHSEM-SUB GRANT (FEMA) DR-4652-0011-NM % of Funding: 75

MUNIS ORG: 2212850 MUNIS OBJ: 490580 Awarded Amount: 124574.82

Funding Source: NMDFA 24-ZI5044-MG25-084 % of Funding: 25

MUNIS ORG: 2212850 MUNIS OBJ: 490210 Awarded Amount: 38934.25

Expense String Phase:

A project must have at least one phase identified, this can be used as an additional level of tracking, for example, CIP - Design, Construction, etc. For Grants can be used as reimbursable types, such as transportation, salaries.

(You can create more than one phase and you can default MUNIS ORGs and OBJs, optional)

Phase: PLANNING, GRANT MGMT. MUNIS ORG: 2212850 MUNIS OBJ: 510300

Grants Only (list all grants if applicable):

Grantor Name: FED P/T NMDHEM-FEMA-DR-4652-0011-NM Awarded Amount: 124574.82

AR Charge Code: 2122850.490580 ☐ Grant funds multiple projects (Complete a form for each project)

Grantor Id: _____ Federal CFDA (if applicable): 97.039

Grantor Name: NMDFA 24-ZI5044-MG25-084 Awarded Amount: 38934.25

AR Charge Code: 2212850.490210 ☐ Grant funds multiple projects (Complete a form for each project)

Grantor Id: _____ Federal CFDA (if applicable): N/A

(If grants please provide all grant award documents with form) ☑ Attached Grant Documentation

Signature: Matthew Bonifer
Matthew Bonifer (Sep 20, 2024 15:41 MDT)

Email: mtbonifer@santafenm.gov

2023_HMGP_HazardMitigationPlan_Council_Packet_2024-10-23

Final Audit Report 2024-11-01

Created:	2024-10-30
By:	Justin Gonzales (jmgonzales@santafenm.gov)
Status:	Signed
Transaction ID:	CBJCHBCAABAAeuZ-CNx17GJSTweIu8Jqf9ZfnzNjnKK-

"2023_HMGP_HazardMitigationPlan_Council_Packet_2024-10-23" History

Document created by Justin Gonzales (jmgonzales@santafenm.gov)
2024-10-30 - 4:50:13 PM GMT- IP address: 63.232.20.2

Document emailed to BRIAN WILLIAMS (bgwilliams@santafenm.gov) for signature
2024-10-30 - 4:54:35 PM GMT

Email viewed by BRIAN WILLIAMS (bgwilliams@santafenm.gov)
2024-10-30 - 5:00:51 PM GMT- IP address: 104.47.64.254

Document e-signed by BRIAN WILLIAMS (bgwilliams@santafenm.gov)
Signature Date: 2024-10-30 - 5:01:23 PM GMT - Time Source: server- IP address: 63.232.20.2

Document emailed to bjmoya@santafenm.gov for signature
2024-10-30 - 5:01:25 PM GMT

Email viewed by bjmoya@santafenm.gov
2024-10-30 - 5:01:49 PM GMT- IP address: 98.60.113.23

Signer bjmoya@santafenm.gov entered name at signing as Brian J Moya
2024-10-30 - 5:02:47 PM GMT- IP address: 98.60.113.23

Document e-signed by Brian J Moya (bjmoya@santafenm.gov)
Signature Date: 2024-10-30 - 5:02:49 PM GMT - Time Source: server- IP address: 98.60.113.23

Document emailed to HENRI HAMMOND-PAUL (hmhammondpaul@santafenm.gov) for signature
2024-10-30 - 5:02:53 PM GMT

Email viewed by HENRI HAMMOND-PAUL (hmhammondpaul@santafenm.gov)
2024-10-31 - 3:35:17 PM GMT- IP address: 104.47.64.254

Powered by Adobe Acrobat Sign

Document e-signed by HENRI HAMMOND-PAUL (hmhammondpaul@santafenm.gov)
Signature Date: 2024-10-31 - 3:35:35 PM GMT - Time Source: server- IP address: 63.232.20.2

Document emailed to mtbonifer@santafenm.gov for signature
2024-10-31 - 3:35:37 PM GMT

Email viewed by mtbonifer@santafenm.gov
2024-10-31 - 3:43:09 PM GMT- IP address: 104.47.64.254

Signer mtbonifer@santafenm.gov entered name at signing as Matthew Bonifer
2024-10-31 - 4:10:27 PM GMT- IP address: 63.232.20.2

Document e-signed by Matthew Bonifer (mtbonifer@santafenm.gov)
Signature Date: 2024-10-31 - 4:10:29 PM GMT - Time Source: server- IP address: 63.232.20.2

Document emailed to ajhopkins@santafenm.gov ajhopkins@santafenm.gov (ajhopkins@santafenm.gov) for signature
2024-10-31 - 4:10:31 PM GMT

Email viewed by ajhopkins@santafenm.gov ajhopkins@santafenm.gov (ajhopkins@santafenm.gov)
2024-10-31 - 4:13:10 PM GMT- IP address: 104.47.64.254

Document e-signed by ajhopkins@santafenm.gov ajhopkins@santafenm.gov (ajhopkins@santafenm.gov)
Signature Date: 2024-10-31 - 4:14:01 PM GMT - Time Source: server- IP address: 63.232.20.2

Document emailed to EMILY OSTER (ekoster@santafenm.gov) for signature
2024-10-31 - 4:14:03 PM GMT

Email viewed by EMILY OSTER (ekoster@santafenm.gov)
2024-11-01 - 5:05:19 PM GMT- IP address: 104.47.64.254

Document e-signed by EMILY OSTER (ekoster@santafenm.gov)
Signature Date: 2024-11-01 - 5:11:02 PM GMT - Time Source: server- IP address: 63.232.20.2

Document emailed to JOHN BLAIR (jwblair@santafenm.gov) for signature
2024-11-01 - 5:11:04 PM GMT

Email viewed by JOHN BLAIR (jwblair@santafenm.gov)
2024-11-01 - 6:44:48 PM GMT- IP address: 104.47.64.254

Signer JOHN BLAIR (jwblair@santafenm.gov) entered name at signing as John Blair
2024-11-01 - 6:45:17 PM GMT- IP address: 63.232.20.2

Document e-signed by John Blair (jwblair@santafenm.gov)
Signature Date: 2024-11-01 - 6:45:19 PM GMT - Time Source: server- IP address: 63.232.20.2

Powered by Adobe Acrobat Sign

Agreement completed.

2024-11-01 - 6:45:19 PM GMT

Signature: XAVIER VIGIL
XAVIER VIGIL (Nov 1, 2024 16:14 MDT)

Email: xivigil@santafenm.gov

24-0637 New Mexico Department of Finance and Adeministration

Final Audit Report 2024-11-01

Created:	2024-11-01
By:	XAVIER VIGIL (xivigil@santafenm.gov)
Status:	Signed
Transaction ID:	CBJCHBCAABAAA2DinkK6hTQip_owp6JQbjGeLDwtUJIX

"24-0637 New Mexico Department of Finance and Adeministrati on" History

Document created by XAVIER VIGIL (xivigil@santafenm.gov)
2024-11-01 - 10:12:59 PM GMT- IP address: 63.232.20.2

Document e-signed by XAVIER VIGIL (xivigil@santafenm.gov)
Signature Date: 2024-11-01 - 10:14:24 PM GMT - Time Source: server- IP address: 63.232.20.2

Document emailed to GERALYN CARDENAS (gfcardenas@santafenm.gov) for signature
2024-11-01 - 10:14:26 PM GMT

Email viewed by GERALYN CARDENAS (gfcardenas@santafenm.gov)
2024-11-01 - 10:15:18 PM GMT- IP address: 104.47.65.254

Document e-signed by GERALYN CARDENAS (gfcardenas@santafenm.gov)
Signature Date: 2024-11-01 - 10:15:33 PM GMT - Time Source: server- IP address: 63.232.20.2

Agreement completed.
2024-11-01 - 10:15:33 PM GMT

Powered by Adobe Acrobat Sign

CITY OF SANTA FE

Date: September 20, 2024

To: Mayor Alan Webber and Governing Body

Via: John Dupuis, Public Utilities Department Director
Mike Dozier, WWM Division Director MD

From: P. Fred Heerbrandt P.E., Engineer Supervisor, WWMD FH

Subject: Amendment #1 On-Call Repairs to the Collection System/CIP 962

Vendor Name: Sub Surface Contracting Inc.

Vendor Number: 1921

ITEM AND ISSUE:
Public Utilities Department/Wastewater Management Division respectfully requests your review and approval of Sub Surface General Service Contract Amendment #1 for On-Call repairs and construction to the collection system, allowing the Collections Section to respond quickly to sanitary sewer line plugs, collapses, replacement, and other similar maintenance. Request for the Approval to increase compensation by $1,500,000 to the total contract amount not to exceed $2,463,475.12. Contract ending June 30, 2025. (P. Fred Heerbrandt, P.E., pfheerbrandt@santafenm.gov, 505-955-4623)

*Original City Clerk Item Number 21-0660
*Date of Original Contract approval by Governing Body 10/18/21

Action Requested: Approval of Contract Amendment #1 and Approval of a BAR for $1,500,000 for from the WWMD Enterprise Fund.

BACKGROUND AND SUMMARY:
The contract is a 4-year contract with three contractors, which terminates on June 30, 2025. We are requesting increased compensation for Sub Surface Contractors, Inc. only. The required funding for repairs is already in place within the 2024 – 2025 fiscal budget.

PROCUREMENT METHOD:
ITB 21/46/B, Three bidders, Award to all three bidders.

Chief Procurement Officer Approval: _____ **Date:** 10/25/2024

Comment/Exceptions: _____

Supporting Information:

CONTRACT NUMBER:
The FY25 Munis contract number is 3203152

$$$$$ SOURCE/REVENUE: ☒Expense ☐Revenue

The funding source is:
Fund Name/Number: Wastewaster/Fund 500
Munis Org Name/Number: WW - Collection/5000362
Munis Object Name/Number: Repair and Maint Sys Equip/520150 $800,000
Munis Object Name/Number: WIP Construction/572970 $700,000

If the project is grant funded? List grant award number: _____

Grant Manager / Accounting Officer Approval: _____ **Date:** ___
Comment/Exceptions: _____

Project Ledger #: _____

Budget Officer Approval: Andy Hopkins **Date:** 10/25/2024

Comment/Exceptions: _____

CAPITAL ASSET (will this procurement result in a tangible item that costs more than $5,000?):

☐Yes | ☐ No n/a

 # (if known): _____

Repair or Replacement of Existing Equipment:

☒Yes | ☐ No
If yes -> ☒Repair | ☒ Replacement

Please explain: Contract is for on-call repair or parcial replacement of collection system components.

Capital Project:
(New and improvement projects that are going to cost $10,000 or more)
☒ Yes | ☐ No

Project Ledger #: WWD2550003

Anticipated length of project: 6/30/25

Asset Manager Approval: _____ **Date:** _____
Comment/Exceptions: _____

Department Approvals:
IT Components: ☐ **Yes |** ☒ **No**
Vehicles: ☐ **Yes |** ☒ **No**
Facilities, Furniture, Fixtures, Equipment: ☐ **Yes |** ☒ **No**

Approval: Emily K. Oster **Title:** Finance Director **Date**: 10/30/2024
Approval: _____ **Title:** _____ **Date**: _____
Comment & Exceptions: _____

Department Contract Administrator Contact Info:

ATTACHMENTS:

Original Contract
Amendment #1
BAR
COI & BR updated no attachment

Item#_____
Munis Contract#3203152
Original Contract Item#21-0660
SWPA/GSA/Coop/RFP/ITB #: 21/46/B

CITY OF SANTA FE
AMENDMENT No. 1 TO
CAPITAL IMPORVEMENTS PROGRAM
ITEM# 21-0660

This AMENDMENT No. 1 (the "Amendment") amends the CITY OF SANTA FE **ON-CALL REPAIR, REPLACEMENT, EXTENSION, AND REHABILITATION OF SEWER COLLECTION SYSTEM** CONTRACT, dated December 9, 2021 (the "Contract"), between the City of Santa Fe (the "City") and Sub Surface Contracting, Inc. (the "Contractor"). The date of this Amendment shall be the date when it is executed by the City and the Contractor whichever occurs last.

RECITALS:

A. Under the terms of the Contract, Contractor has agreed to provide the On-Call Repair, Replacement, Extension, And Rehabilitation of Sewer Collection System services.

B. Pursuant to Article 14 of the Contract, and for good and valuable consideration, the receipt and sufficiency of which are acknowledged by the parties, the City and the Contractor agree as follows:

2. COMPENSATION.

The amount of compensation is increased by a total of $1,500,000.00 so that Article 2, paragraph A reads in its entirety as follows:

A. The City shall pay to the Contractor in full payment for services satisfactorily performed up to a maximum of $2,428,956.47 including NMGRT total for the contract.

C. CONTRACT IN FULL FORCE.

Except as specifically provided in this Amendment, the Contract remains and shall remain in full force and

effect, in accordance with its terms.

IN WITNESS WHEREOF, the parties have executed this Amendment No. 1 to the Contract as of the dates set forth below.

CITY OF SANTA FE:

_____
ALAN WEBBER, MAYOR

DATE:_____

CONTRACTOR:
Sub Surface Contracting, Inc

Neal Keiper (Sep 24, 2024 10:03 MDT)
_____
NEAL KEIPER, PRESIDENT

DATE: Sep 24, 2024

CRS# #0210425600

ATTEST:

_____
GERALYN CARDENAS, INTERIM CITY CLERK

CITY ATTORNEY'S OFFICE:

Marcos Martinez
Marcos Martinez (Sep 24, 2024 10:04 MDT)
_____
SENIOR ASSISTANT CITY ATTORNEY

APPROVED FOR FINANCES:

Emily K. Oster
_____
FINANCE DIRECTOR

Contract_Amendment Sub Surface-FINAL CAO

Final Audit Report 2024-09-24

Created:	2024-09-20
By:	Amy Cawthon (amcawthon@santafenm.gov)
Status:	Signed
Transaction ID:	CBJCHBCAABAAMJj9XJhjFGFiJIWGtxMDPWbqTggpmbiw

"Contract_Amendment Sub Surface-FINAL CAO" History

Document created by Amy Cawthon (amcawthon@santafenm.gov)
2024-09-20 - 7:56:49 PM GMT- IP address: 63.232.20.2

Document emailed to nealkeiper@gmail.com for signature
2024-09-20 - 7:57:34 PM GMT

Email viewed by nealkeiper@gmail.com
2024-09-21 - 7:51:53 PM GMT- IP address: 104.28.85.113

Email viewed by nealkeiper@gmail.com
2024-09-23 - 1:02:58 AM GMT- IP address: 104.28.111.148

Signer nealkeiper@gmail.com entered name at signing as Neal Keiper
2024-09-24 - 4:03:40 PM GMT- IP address: 174.205.160.18

Document e-signed by Neal Keiper (nealkeiper@gmail.com)
Signature Date: 2024-09-24 - 4:03:42 PM GMT - Time Source: server- IP address: 174.205.160.18

Document emailed to Marcos Martinez (mdmartinez@santafenm.gov) for signature
2024-09-24 - 4:03:48 PM GMT

Email viewed by Marcos Martinez (mdmartinez@santafenm.gov)
2024-09-24 - 4:04:07 PM GMT- IP address: 76.127.1.192

Document e-signed by Marcos Martinez (mdmartinez@santafenm.gov)
Signature Date: 2024-09-24 - 4:04:26 PM GMT - Time Source: server- IP address: 76.127.1.192

Agreement completed.
2024-09-24 - 4:04:26 PM GMT

Powered by Adobe Acrobat Sign

Log # *{Finance use only}*:	
Journal # *{Finance use only}*:	

City of Santa Fe, New Mexico
BUDGET AMENDMENT RESOLUTION (BAR)

DEPARTMENT / DIVISION NAME	DATE
Public Utilities/Wastewater	8/28/2024

ITEM DESCRIPTION	ORG	OBJECT	PROJECT	INCREASE	DECREASE
EXPENDITURES				*{enter as positive #}*	*{enter as negative #}*
Rep and Maint System Equip	5000362	520150	WWD2550003	$ 800,000.00	
WIP Construction	5000375	572970	WWD2550003	$ 700,000.00	
REVENUES				*{enter as negative #}*	*{enter as positive #}*
				$ 1,500,000	$ -

JUSTIFICATION: *(use additional page if needed)*
--Attach supporting documentation/memo
To increase contract #3203152 for Sub Sruface - CIP - maint and repair/construction in the amount of $1,500,000 from cash to increase total contract to $1,500,000.

{Complete section below if BAR results in a net change to ANY Fund}

Fund(s) Affected	Fund Balance Increase/(Decrease)
500	(1,500,000)
TOTAL:	**(1,500,000)**

Linda Macallister — Sep 20, 2024
Linda Macallister (Sep 20, 2024 14:40 MDT)
Prepared By *{print name}* — Date

{Use this form for Finance Committee/ City Council agenda items ONLY}

CITY COUNCIL APPROVAL

City Council Approval Date

Agenda Item #:

Andy Hopkins — 10/25/2024
Budget Officer — Date

Division Director Signature *{optional}* — Date

Finance Director *{≤ $5,000}* — Date

John Dennis (Sep 24, 2024 07:19 MDT) — Sep 24, 2024
Department Director Signature — Date

City Manager *{≤ $60,000}* — Date

City of Santa Fe, New Mexico

memo

Date: October 18, 2021

To: Public Works-Public Utilities Committee / Finance Committee

From: Michael L. Dozier, Wastewater Division Director MD
Stan Holland, Wastewater Division Engineer SH

Via: Shannon W. Jones, Utility Division Director SJ

RE: Request to Award Invitation to Bid # '21/46/B for the Publicly Owned Treatment Works (POTW) On-Call Repair, Replacement, Extension and Rehabilitation of Sewer Collection System Price Agreement, CIP #962 to Sub Surface Contracting, Inc., Allied 360 Construction, LLC. and TLC Plumbing, Inc. for a total amount up to $200,000 inclusive of nmgrt.

ITEM AND ISSUE:

1) The Wastewater Division requests award of Bid Number '21/46/B for the Publicly Owned Treatment Works (POTW) On-Call Repair, Replacement, Extension and Rehabilitation of Sewer Collection System Price Agreement, CIP #962 to Sub Surface Contracting, Inc., Allied 360 Construction, LLC. and TLC Plumbing, Inc. for the remainder of Four (4) Fiscal Years, FY 2021-22 until FY2024-25. Initial funding of $200,000.00 inclusive of NMGRT is requested for FY2021-22. Future funding will depend upon budget availability.

BACKGROUND AND SUMMARY:

The Publicly Owned Treatment Works (POTW) On-Call Repair, Replacement, Extension and Rehabilitation of Sewer Collection System Price Agreement is an on-call requirements contract, with the Wastewater Division issuing work orders as needed for work such as public sewer line replacements and work within the Wastewater Treatment Plant. The contract is funded from the Wastewater Division's Collection Section (Sewer Line Maintenance) and the Wastewater Facility Operations Section. The initial Contract amount is limited to $200,000.00 inclusive of New Mexico Gross Receipt Tax (NMGRT).

This was a multi-contractor award Invitation to Bid (ITB) to set the applicable Bid Items for future work. The ITB was only used to select the winning Contractors. Future work will be assigned under fully signed Work Orders for planned work or will be followed with a signed Work Order for Emergency repairs. The exact type of work required will be used to select from the applicable Bid Items. Not every Bit Item is anticipated to be used.

The initial contract period is Fiscal Years 2021-2025. The bids for this project were opened on June 24, 2021 and were subsequently evaluated for completeness and accuracy. The base bids are $163,971.00 and $166,293.00 for Allied 360 Construction. and Sub Surface Contracting respectively and were very similar in pricing for certain types of work. TLC was the highest bidder at $244,863.15.

Sub Surface Contracting has had the current On-Call Contract with the Wastewater Division for the past four years.

The Wastewater Division has verified with Los Alamos County that Allied 360 Construction has satisfactorily completed some of the type work outlined in the Bid.

TLC Inc. had the on-call contract with the Wastewater Division in the past prior to Sub Surface. TLC is also lower in pricing for some specialty work items like pipe bursting, trenchless spot repairs and major sewer line replacements and they have a larger work force to call upon.

For these reasons, it was decided to award and utilize all three (3) Contractors

A summary of the bids is provided below:

Bidders	Total Bid without NMGRT
Allied 360 Construction	$163.971.00
Sub Surface Contracting, Inc.	$166,293.00
TLC Plumbing & Utility	$244,863.15

CONTRACT NUMBER:
The FY22 Munis contract number:
Sub Surface Contracting # 3203056
Allied 360 # 3203057
TLC # 3203058

FUNDING SOURCE:
The funding source is:
Waste Water Operating Collections and Operations
FY 2022
Fund Name/Number: Waste Water Enterprise Fund/ 505
Munis Org Name/Number: Operations 5000367; Collections 5000362
Munis Object Name/Number: Repair & Maint. System Equip. / 520150

Funds for this work are available in Business Unit, Line Item 5000362-520150 (Collections) in the amount of $150,000.00 including NMGRT and Business Unit, Line Item 5000367-520150 (Operations) in the amount of $50,000.00

RECOMMENDATION:

The Wastewater Division recommends:

- Review and approval of award of contracts to Sub Surface Contracting, Inc., Allied 360 Construction and TLC Plumbing & Utility for Bid # '21/46/B for the FY 21/22 Publicly Owned

Treatment Works (POTW) On-Call Repair, Replacement, Extension and Rehabilitation of Sewer Collection System Price Agreement, CIP #962 for a total amount of $200,000.00 inclusive of NMGRT for FY2021-22.

- Forwarding and recommendation of approval of award and contract to the Finance Committee for their consideration and approval and to the Governing Body for their final consideration and approval.

(Rev. 4/20)

City of Santa Fe
Central Purchasing Office

Price Agreement

Awarded Contractor(s): 1) Allied 360 Construction, LLC. 2) Sub Surface Contracting, Inc. 3) TLC Plumbing, Inc. *(see page 15 for contact info)*	**Price Agreement Number:** **Payment Terms: Net 30**
Ship To: **All City of Santa Fe Departments and Political Subdivisions allowed by Law**	**F.O.B.: Destination**
Invoice To: **City of Santa Fe** **Accounts Payable** **PO Box 909** **Santa Fe, NM 87504-0909**	**Term: July 1, 2021 to June 30, 2025** **Delivery: As requested by Department**

Title: Publicly Owned Treatment Works (POTW) On-Call Repair, Replacement, Extension and Rehabilitation of Sewer Collection System Price Agreement CIP #962

This Price Agreement is to be awarded pursuant to the respective Invitation to Bid (ITB) 21/46/B and shall become a part thereof.

This Price Agreement is made subject to the "terms and conditions" as indicated on subsequent price agreement articles and construction contract pages.

Instructions to Supplier:

- By commencing under this Price Agreement (Agreement), the Contractor agrees to all terms and conditions within and attached and agrees that if there is a conflict with the Contractors terms, the City of Santa Fe's terms and conditions shall govern. In cases of discrepancy between the work order, purchase order and this Agreement, the terms and conditions of this Agreement shall prevail.
- Do not fill orders for goods/services not listed in this Agreement.
- Orders against this Agreement must be placed with as a separate contract work order with a purchase order.
- Do not fill orders without a valid quote, purchase order work order.
- The purchase order release number must be on all invoices.
- The City of Santa Fe (City) will not be liable for purchases made by unauthorized individuals.

Please forward all original invoice(s) to the Accounts Payable Department at PO Box 909, Santa Fe, NM 87504-0909

Instructions to Requesting Department:

- Do not place orders for goods/services not listed in the Procurement Contract.
- To place an order against this Procurement Contract, issue a Purchase Order Release before placing the order with the Supplier.

This Price Agreement is made subject to the "terms and conditions" as indicated on subsequent pages.

Terms and Conditions

General: When the City or the Requesting Department issues a contract or a purchase order release, a binding contract is created.

Variation in Quantity: No variation in the quantity of any item called for by this order will be accepted unless such variation has been caused by conditions of loading, shipping, packing or allowances in manufacturing process and then only to the extent, if any, specified in this order.

Assignment:

a. Neither the order, nor any interest therein, nor any claim thereunder, shall be assigned or transferred by the Contractor, except as set forth in Subparagraph 3b or as expressly authorized in writing by the Chief Procurement Officer or his/her designee. No such assignment or transfer shall relieve the Contractor from the obligations and liabilities under this order.

b. Contractor agrees that any and all claims for overcharge resulting from antitrust violations which are borne by the City as to goods, services, and materials purchased in connection with this agreement are hereby assigned to the City.

City Furnished Property: City furnished property shall be returned to the City upon request in the same condition as received except for ordinary wear, tear and modifications ordered hereunder.

Inspection: Final inspection and acceptance will be made at the destination. Supplies rejected at the destination for nonconformance with specifications shall be removed at the Contractor's risk and expense, promptly after notice of rejection.

Inspection of Plant: The Chief Procurement Officer or his/her designee may inspect, at any reasonable time, the part of the Contractor's, or any subcontractor's plant or place of business, which is related to the performance of this contract.

Commercial Warranty: The Contractor agrees that the supplies or services furnished under this order shall be covered by the most favorable commercial warranties the Contractor gives for such to any customer for such supplies or services. The rights and remedies provided herein shall extend to the City and are in addition to and do not limit any rights afforded to the City by any other clause of this order. **Contractor agrees not to disclaim warranties of fitness for a particular purpose of merchantability.**

Taxes: The unit price shall exclude all state taxes.

Default: The City reserves the right to cancel all or any part of this order without cost to the City, if the Contractor fails to meet the provisions of this order and, except as otherwise provided herein, to hold the Contractor liable for any excess cost occasioned by the City due to the Contractor's default. The Contractor shall not be liable for any excess costs if failure to perform the order arises out of causes beyond the control and without the fault or negligence of the Contractor, such causes include but are not restricted to, acts of God or the public enemy, acts of the State or Federal Government, fires, floods, epidemics, quarantine restrictions, strikes, freight embargoes, unusually severe weather and defaults of subcontractors due to any of the above, unless the City shall determine that the supplies or services to be furnished by the subcontractor were obtainable from other sources in sufficient time to permit the Contractor to meet the required delivery scheduled. The rights of

the City provided in this paragraph shall not be exclusive and are in addition to any other rights now being provided by law or under this order.

Non-Collusion: In signing this bid the Contractor certifies he/she has not, either directly or indirectly, entered into action in restraint of free competitive bidding in connection with this offer submitted to the Chief Procurement Officer or his/her designee.

Nondiscrimination: Contractor doing business with the City must be in compliance with the Federal Civil Rights Act of 1964 and Title VII of the Act (Rev. 1979) and the Americans with Disabilities Act of 1990 (Public Law 101-336).

The Procurement Code: Sections 13-1-28 through 13-1-199 NMSA 1978, imposes civil and criminal penalties for its violation. In addition the New Mexico criminal statutes impose felony penalties for bribes, gratuities and kickbacks.

Items: All bid items are to be NEW and of most current production, unless otherwise specified.

Payment for Purchases: Except as otherwise agreed to: late payment charges may be assessed against the Requesting Department in the amount and under the conditions set forth in Section 13-1-158 NMSA 1978.

Workers' Compensation: The Contractor agrees to comply with state laws and rules pertaining to Workers' Compensation benefits for its employees. If the Contractor fails to comply with Workers' Compensation Act and applicable rules when required to do so, this Agreement may be terminated by the contracting agency.

Contractor Personnel: Personnel proposed in the Contractor's written bid to the Procuring Agency are considered material to any work performed under this Price Agreement. Once a Purchase Order or contract has been executed, no changes of personnel will be made by the Contractor without prior written consent of the Requesting Department. Replacement of any Contractor personnel, if approved, shall be with personnel of equal ability, experience, and qualifications. The Contractor will be responsible for any expenses incurred in familiarizing the replacement personnel to insure their being productive to the project immediately upon receiving assignments. Approval of replacement personnel shall not be unreasonably withheld. The Requesting Department shall retain the right to request the removal of any of the Contractor's personnel at any time.

Subcontracting: The Contractor shall not subcontract any portion of the Price Agreement without the prior written approval of the Requesting Department. No such subcontracting shall relieve the Contractor from its obligations and liabilities under this Price Agreement, nor shall any subcontracting obligate payment from the City.

Records and Audit: The Contractor shall maintain detailed time and expenditure records that indicate the date, time, nature, and cost of services rendered during this Price Agreement's term and effect, and retain them for a period of three (3) years from the date of final payment under this Price Agreement. The records shall be subject to inspection by the City. The City shall have the right to audit billings, both before and after payment. Payment for services under this Price Agreement shall not foreclose the right of the City to recover excessive or illegal payments.

Subcontracts: The foregoing requirements for Contractor Personnel, Subcontracting, and Audit shall be inserted into all subcontracts from the prime contractor to the subcontractor.

ARTICLES

Article I – Statement of Work
Under the terms and conditions of this Price Agreement all commissions, institutions, political subdivisions and local public bodies allowed by law may issue orders for items and/or services described herein. The terms and conditions of this Price Agreement shall form a part of each order issued hereunder.

The items and/or services to be ordered shall be as listed under Article X - Price Schedule. All orders issued hereunder will bear both an order number and this Price Agreement number. It is understood that no guarantee or warranty is made or implied by the City's Chief Procurement Officer, his/her designee or the Requesting Department that any order for any definite quantity will be issued under this Price Agreement. The Contractor is required to accept the order and furnish the items and/or services in accordance with the articles contained hereunder for the quantity of each order.

Article II – Term
The term of this Price Agreement, for issuance of orders, shall be as indicated in the specifications.

Article III – Specifications
Items and/or services furnished hereunder shall conform to the requirements of specifications and/or drawings applicable to items listed under Article X-Price Schedule. Orders issued against this schedule will show the applicable Price Agreement item(s), number(s), and price(s); however they may not describe the item(s) fully.

Article IV – Shipping and Billing Instructions
Delivery shall be as called for by the Requesting Department. Shipment shall be made only against specific orders which the Requesting Department may place with the Contractor during the term. Contractor shall ship in accordance with the following instructions:

a. The Contractor shall enclose a packing list with each shipment listing the City's purchasing document number and the Contractor's name, Requesting Department's contact name and location shall be shown on each packing and delivery ticket, package, bill of lading, the commercial parts number (if any) for each item and other correspondence in connection with the shipments. The Requesting Department's count will be accepted by the Contractor as final and conclusive on all shipments not accompanied by a packing ticket.

b. The Contractor's invoice shall be submitted duly certified and shall contain the following information: order number, description of supplies or services, quantities, unit price and extended totals. Separate invoices shall be rendered for each and every complete shipment.

c. Invoices must be submitted to the City's **Accounts Payable** and NOT the Central Purchasing Office.

If Contractor is unable to meet stated delivery the City's Chief Procurement Officer or his/her designee must be notified.

Article V – Termination
The City may terminate this Agreement for convenience or cause. The Contractor may only terminate this Agreement based upon the City's uncured, material breach of this Agreement. Contractor shall give the City written notice of termination at least thirty (30) days prior to the intended date of termination, which notice shall (i) identify all the City's material breaches of this Agreement upon which the termination is based and (ii) state what the City must do to cure such material breaches. Contractor's notice of termination shall only be effective (i) if the City does not cure all material breaches within the thirty (30) day notice period or (ii) in the case of material breaches that cannot be cured within thirty (30) days, the City does not, within the thirty (30) day notice period, notify the Contractor of its intent to cure and begin with due diligence to cure the material breach.

Termination of this Contract, however, shall not affect any outstanding orders. This provision is not exclusive and shall not waive other rights and remedies afforded either party in the event of breach of contract or default. In such instances the contract may be cancelled effective immediately.

Article VI – Amendment
This Price Agreement may be amended by mutual agreement of the City's Chief procurement Officer or his/her designee and the Contractor upon written notice by either party to the other. An amendment to this Price Agreement shall not affect any outstanding orders issued prior to the effective date of the amendment as mutually agreed upon, and as published by the City's Chief procurement Officer or his/her designee. Amendments affecting price adjustments and/or the extension of a price agreement expiration date are not allowed unless specifically provided in the bid and price agreement specifications.

Article VII – Indemnity Clause
Contractor shall indemnify and hold harmless the City, its officers and employees, against liability, claims, damages, losses or expenses arising out of bodily injury to persons or damage to properties caused by, or resulting from Contractor's, and/or its employees, own negligent act or omission while Contractor, and/or its employees, perform or fails to perform its obligations and duties under the Terms and Conditions of this agreement. This hold harmless and indemnification clause is subject to the immunities, provisions, and limitations of the Tort Claims Act (Section 41-4-1, et seq., N.M.S.A. 1978 comp. and Section 57-7-1 N.M.S.A. 1878 comp. and any amendments thereto.

It is specifically agreed between the parties executing this agreement that it is not intended by any of the provisions of any part of the agreement to create in the public or any member thereof a third party beneficiary or to authorize anyone not a party to the agreement to maintain a suit(s) for wrongful death(s), bodily and/ or personal injury(s) to person(s), damage(s) to property(ies) and/or any other claim(s) whatsoever pursuant to the provisions of this agreement.

Contractor shall provide all insurance necessary to employees on the work site, including but not limited to Worker's Compensation.

Article VIII – Issuance or Work Orders
Only written signed Work Orders are valid under this Price Agreement.

Article IX – Packing (if applicable)
Packing shall be in conformance with standard commercial practices.

Article X – Price Schedule
Prices as listed in the item(s) price schedule hereto attached are firm.

Article XI – Wage Rates
Pursuant to the requirements of any Contract entered into that will have a Work Order (WO) in excess of sixty thousand dollars ($60,000) for construction is subject to the minimum wage rate determination issued by the New Mexico Department of Work Force Solutions for this project/WO.

Item# 21-0660
Munis Contract#_____

CITY OF SANTA FE

CAPITAL IMPROVEMENTS PROGRAM

AGREEMENT BETWEEN
CITY AND CONTRACTOR

PUBLICLY OWNED TREATMENT WORKS (POTW) ON-CALL REPAIR, REPLACEMENT, EXTENSION AND REHABILITATION OF SEWER COLLECTION SYSTEM PRICE AGREEMENT CIP #962

THIS AGREEMENT is made and entered into by and between the **CITY OF SANTA FE, NEW MEXICO**,hereinafter referred to as the "City," and **ALLIED 360 CONSTRUCTION, LLC., SUB SURFACE CONTRACTING, INC. AND TLC PLUMBING, INC.**, hereinafter referred to as the "Contractor(s)" and is effective as of the date set forth below upon which it is executed by the Parties.

IT IS AGREED BETWEEN THE PARTIES:

1. **Scope of Work.**
   A. The Contractor shall perform the following work:

      1) The City of Santa Fe Public Utilities Department Publicly Owned Treatment Works (POTW) On-call repair, replacement, extension and rehabilitation of sewer collection system Price Agreement and work related to those systems. This procurement will be based on a vendor supplying pricing through an established cost schedule (attached). The price agreement will contain the contractor's commitment to offer services and willingness to respond 'on-call 'to the requests when such requests are originated and authorized by the City of Santa Fe.

      The work under this contract is located in the City of Santa Fe at various sites throughout the City. The scope of work consists of furnishing all mobilization, labor, material, equipment and services, unless otherwise specified, for on-call emergency service and for routine work for the City of Santa Fe Sanitary Sewer Treatment Facility and Sanitary Sewer Collection System and appurtenances. Work to include repair, replacement, extension and rehabilitation of the sewer collection system to include trenching, excavation, backfill and compaction at excavation site, cleaning of loose debris, soil density testing, and any other incidental items necessary for the safety, health and welfare of the general public and to complete Work authorized under a Work Oder and in accordance with the drawings, specifications, and other Contract Documents.

   B. The Work to install fully functioning, warrantied sewer lines and manholes and other work issued by a Work Order includes, but is not limited to the following:

      1. Installation of all specified sewer lines, sewer manholes and service connections, etc.
      2. Earthwork, grading and compaction for the restoring the driving surface over disturbed

areas.

3. Coordination with Public Service Company of New Mexico (PNM) as required
4. Coordination with the New Mexico Gas Company as required
5. Coordination with Century Link as required
6. Coordination with New Mexico NM811 and/or contracting with utility location providers as required.
7. Coordination with the City's Wastewater Division for periodic review of system installations.
8. Any other related work associated with this work, as drawn and specified in the WO.
9. Provide all required materials testing.
10. Provide 12 month Contractor's warranty on installed sewer collection systems, parts and labor.
11. Provide Manufacturer's warranties on miscellaneous parts and labor.

C. The Contractor shall be responsible for adherence to the Contract Documents, Work Orders, Specifications and approved directives and Change Orders:

- The Contractor shall be responsible for State CID requirements and permit.
- The Contractor shall be responsible for verifications
- of all existing conditions, measurements and dimensions before signing each WO.
- The Contractor shall be responsible for all permits, fees, and State and/or City inspections associated with the construction.

D. The Contractor shall perform all the work required by the Wastewater Management Division, as required, on each Work Order (WO) in the Contract Documents (attached) for the City of Santa Fe Public Utilities Department Publicly Owned Treatment Works (POTW) On-call Repair, Replacement, Extension and Rehabilitation of Sewer Collection System Price Agreement.

E. The Contractor shall be responsible for verifications of all measurements and dimensions for bidding on each subsequent Work Order.

F. The Contractor shall provide and keep at the work site, a complete "as-built" record set of drawings that shall be corrected daily and shall show every change from the original approved drawings and specifications. These changes shall be forwarded to City periodically. The drawings shall reflect exact and actual "as-built" conditions of construction, installation, and erection as it progresses. Where drawings are not adequate to show "as-built" conditions, Contractor shall prepare sketches which delineate the necessary "as-built" information. City shall furnish two (2) sets of all paper "blue-line" print "approved" drawings for use in accomplishing specified mark-up. Final "as-built" drawings shall be delivered to City by Contractor upon completion of the work.

G. The Contractor shall be responsible for maintaining traffic control at the site in conformance with the Manual on Uniform Traffic Control Devices.

H. The Contractor shall be responsible for all permits, fees, and State and City inspections associated with the construction.

I. Incorporation by Reference. All exhibits, addenda, schedules of ITB 21/46/B attached hereto and all certificates, work order documents, drawings, as-builts and other instruments contemplated to be delivered hereunder are hereby expressly made a part of this Agreement as fully as thoughset forth herein, and all references to this Agreement herein or in any of such writings shall be deemed to refer to and include all of such writings. This Agreement contains the entire agreement between the parties with respect to the subject matter hereof and supersedes all prior agreements and understandings, both written and oral, among the parties with respect to the subject matter hereof. If there is any conflict between such exhibits or addenda and the terms of this Agreement, such exhibits or addenda shall control.

2. Compensation.

A. The City shall pay to the Contractor in full payment for services satisfactorily performed BASED UPON THE ATTACHED PRICE SHEETS, DELIVERABLES, MILESTONES, AND COMPLETED WORK ORDERS (WO) including gross receipts tax.

The applicable gross receipts taxes or local option taxes shall be shown as a separate amount on each billing or request for payment made under the contract.

The parties do not intend for the Contractor to continue to provide services without compensation when the total compensation amount is reached. In no event will the Contractor be paid for services provided in excess of the total compensation amount without this Agreement being amended in writing prior to those services in excess of the total compensation amount being provided.

B. Payment is subject to availability of funds pursuant to the Appropriations Paragraph set forth below and to any negotiations between the parties from year to year pursuant to Paragraph 1, Scope of Work, and to approval by the City. All invoices MUST BE received by the City no later than thirty 30) days after the termination of the Fiscal Year in which the services were delivered. Invoices received after such date WILL NOT BE PAID.

C. Payment in future fiscal years is subject to availability of funds pursuant to the Appropriations Paragraph set forth below and to any negotiations between the parties from year to year pursuant to Paragraph 1, Scope of Work, and to approval by the City. All invoices MUST BE receivedby the City no later than fifteen (15) days after the termination of the Fiscal Year in which the services were delivered. Invoices received after such date WILL NOT BE PAID.)

E. The Contractor must submit a detailed statement accounting for all services performed and expenses incurred. If the City finds that the services are not acceptable, within thirty days after thedate of receipt of written notice from the Contractor that payment is requested, it shall provide the Contractor a letter of exception explaining the defect or objection to the services, and outlining steps theContractor may take to provide remedial action. Upon certification by the City that the services have been received and accepted, payment shall be tendered to the Contractor within thirty days after the dateof acceptance. If payment is made by mail, the payment shall be deemed tendered on the date it is postmarked. However, the City shall not incur late charges, interest, or penalties for failure to make payment within the time specified herein.

3. **Term.**

THIS AGREEMENT SHALL NOT BECOME EFFECTIVE UNTIL APPROVED BY THE CITY. This Agreement shall terminate on **June 30, 2025** unless terminated pursuant to paragraph 4 (Termination), or paragraph 5 (Appropriations). In accordance with Section 13-1-150 NMSA 1978, no contract term for a professional services contract, including extensions and renewals, shall exceed four years, except as set forth in Section 13-1-150 NMSA 1978.

4. **Termination.**

A. Termination. This Agreement may be terminated by either of the parties hereto upon written notice delivered to the other party at least thirty (30) days prior to the intended date of termination. Except as otherwise allowed or provided under this Agreement, the City's sole liability upon such termination shall be to pay for acceptable work performed prior to the Contractor's receipt of the notice of termination, if the City is the terminating party, or the Contractor's sending of the notice of termination, if the Contractor is the terminating party; provided, however, that a notice of termination shall not nullify or otherwise affect either party's liability for pre-termination defaults under or breaches of this Agreement. The Contractor shall submit an invoice for such work within thirty (30) days of receiving or sending the notice of termination. Notwithstanding the foregoing, this Agreement may be terminated immediately upon written notice to the Contractor if the Contractor becomes unable to perform the services contracted for, as determined by the City or if, during the term of this Agreement, the Contractor or any of its officers, employees or agents is indicted for fraud, embezzlement or other crime due to misuse of City funds or due to the Appropriations paragraph herein. *THIS PROVISION IS NOT EXCLUSIVE AND DOES NOT WAIVE THE City's OTHER LEGAL RIGHTS AND REMEDIES CAUSED BY THE CONTRACTOR'S DEFAULT/BREACH OF THIS AGREEMENT.*

B. Termination Management. Immediately upon receipt by either the City or the Contractor of notice of termination of this Agreement, the Contractor shall: 1) not incur any further obligations for salaries, services or any other expenditure of funds under this Agreement without written approval of the City; 2) comply with all directives issued by the City in the notice of termination as to the performance of work under this Agreement; and 3) take such action as the City shall direct for the protection, preservation, retention or transfer of all property titled to the City and records generated under this Agreement. Any non-expendable personal property or equipment provided to or purchased by the Contractor with contract funds shall become property of the City upon termination and shall be submitted to the City as soon as practicable.

5. **Appropriations.**

The terms of this Agreement are contingent upon sufficient appropriations and authorization being made by the City Council for the performance of this Agreement. If sufficient appropriations and authorization are not made by the City Council, this Agreement shall terminate immediately upon written notice being given by the City to the Contractor. The City's decision as to whether sufficient appropriations are available shall be accepted by the Contractor and shall be final. If the City proposes an amendment to the Agreement to unilaterally reduce funding, the Contractor shall have the option to terminate the Agreement or to agree to the reduced funding, within thirty (30) days of receipt of the proposed amendment.

6. **Status of Contractor.**

The Contractor and its agents and employees are independent contractors performing professional services for the City and are not employees of the City. The Contractor and its agents and

employees shall not accrue leave, retirement, insurance, bonding, use of City vehicles, or any other benefits afforded to employees of the City as a result of this Agreement. The Contractor acknowledges that all sums received hereunder are reportable by the Contractor for tax purposes, including without limitation, self-employment and business income tax. The Contractor agrees not to purport to bind the City unless the Contractor has express written authority to do so, and then only within the strict limits of that authority.

7. **Construction Contract Performance and Payment Bond.**

A. When a construction contract is awarded in excess of twenty-five thousand dollars ($25,000), the following bonds or security shall be delivered to the City and shall become binding on the parties upon the execution of the contract. If the Contractor fails to deliver the required performance and payment bonds, the Contractor's bid shall be rejected, its bid security shall be enforced to the extent of actual damages. Award of the contract shall be made pursuant to the Procurement Code in the following manner:

1) a performance bond satisfactory to the City, executed by a surety company authorized to do business in this state and said surety to be approved in federal circular 570 as published by the United States treasury department or the state board of finance or the local governing authority, in an amount equal to one hundred percent of the price specified in the contract; and

2) a payment bond satisfactory to the City, executed by a surety company authorized to do business in this state and said surety to be approved in federal circular 570 as published by the United States treasury department or the state board of finance or the local governing authority, in an amount equal to one hundred percent of the price specified in the contract, for the protection of all persons supplying labor and material to the contractor or its subcontractors for the performance of the work provided for in the contract.

B. A subcontractor shall provide a performance and payment bond on a public works building project if the subcontractor's contract for work to be performed on a project is one hundred twenty-five thousand dollars ($125,000) or more.

8. **Assignment.**

The Contractor shall not assign or transfer any interest in this Agreement or assign any claims for money due or to become due under this Agreement without the prior written approval of the City.

9. **Subcontracting.**

The Contractor shall not subcontract any portion of the services to be performed under this Agreement without the prior written approval of the City. No such subcontract shall relieve the primary Contractor from its obligations and liabilities under this Agreement, nor shall any subcontract obligate direct payment from the City.

10. **Release.**

Final payment of the amounts due under this Agreement shall operate as a release of the City, its officers and employees from all liabilities, claims and obligations whatsoever arising from or under this Agreement.

11. Confidentiality.

Any confidential information provided to or developed by the Contractor in the performance of this Agreement shall be kept confidential and shall not be made available to any individual or organization by the Contractor without the prior written approval of the City.

12. Product of Service -- Copyright.

All materials developed or acquired by the Contractor under this Agreement shall become the property of the City and shall be delivered to the City no later than the termination date of this Agreement. Nothing developed or produced, in whole or in part, by the Contractor under this Agreement shall be the subject of an application for copyright or other claim of ownership by or on behalf of the Contractor.

13. Conflict of Interest; Governmental Conduct Act.

A. The Contractor represents and warrants that it presently has no interest and, during the term of this Agreement, shall not acquire any interest, direct or indirect, which would conflict in any manner or degree with the performance or services required under the Agreement.

B. The Contractor further represents and warrants that it has complied with, and, during the term of this Agreement, will continue to comply with, and that this Agreement complies with all applicable provisions of the Governmental Conduct Act, Chapter 10, Article 16 NMSA 1978.

C. Contractor's representations and warranties in Paragraphs A and B of this Article 12 are material representations of fact upon which the City relied when this Agreement was entered into by the parties. Contractor shall provide immediate written notice to the City if, at any time during the term of this Agreement, Contractor learns that Contractor's representations and warranties in Paragraphs A and B of this Article 12 were erroneous on the effective date of this Agreement or have become erroneous by reason of new or changed circumstances. If it is later determined that Contractor's representations and warranties in Paragraphs A and B of this Article 12 were erroneous on the effective date of this Agreement or have become erroneous by reason of new or changed circumstances, in addition to other remedies available to the City and notwithstanding anything in the Agreement to the contrary, the City may immediately terminate the Agreement.

D. All terms defined in the Governmental Conduct Act have the same meaning in this section.

14. Amendment.

A. This Agreement shall not be altered, changed or amended except by instrument in writing executed by the parties hereto and all other required signatories.

B. If the City proposes an amendment to the Agreement to unilaterally reduce funding due to budget or other considerations, the Contractor shall, within thirty (30) days of receipt of the proposed Amendment, have the option to terminate the Agreement, pursuant to the termination provisions as set forth in Article 4 herein, or to agree to the reduced funding.

15. Change Orders.

Changes. The Contractor may only make changes or revisions within the Scope of Work as defined by

Article 1 and/or Exhibit 1 after receipt of written approval by the City Manager or his/her designee. Such change may only be made to Tasks or Sub-Task as defined in the Scope of Work. Under no circumstance shall such change affect the:

1. Deliverable requirements, as outlined in the Scope of Work;
2. Due date of any Deliverable, as outlined in the Scope of Work;
3. Compensation of any Deliverable, as outlined in the Scope of Work;
4. Agreement compensation, as outlined in Article 2; or
5. Agreement termination, as outlined in Article 4.

Change Request Process. In the event that circumstances warrant a change to accomplish the Scope of Work as described above, a Change Request shall be submitted that meets the following criteria:

The Project Manager shall draft a written Change Request for review and approval by the City Manager to include:

1. the name of the person requesting the change;
2. a summary of the required change;
3. the start date for the change;
4. the reason and necessity for change;
5. the elements to be altered; and
6. the impact of the change.

The City Manager shall provide a written decision on the Change Request to the Contractor within a maximum of ten (10) Business Days of receipt of the Change Request. All decisions made by the City Manager are final. Change Requests, once approved, become a part of the Agreement and become binding as a part of the original Agreement.

16. Merger.

This Agreement incorporates all the Agreements, covenants and understandings between the parties hereto concerning the subject matter hereof, and all such covenants, Agreements and understandings have been merged into this written Agreement. No prior Agreement or understanding, oral or otherwise, of the parties or their agents shall be valid or enforceable unless embodied in this Agreement.

17. Entire Agreement.

This Agreement, together with any other documents incorporated herein by reference and all related Exhibits and Schedules constitutes the sole and entire agreement of the Parties with respect to the subject matter of this Agreement, and supersedes all prior and contemporaneous understandings, agreements, representations, and warranties, both written and oral, with respect to the subject matter. In the event of any inconsistency between the statements in the body of this Agreement, and the related Exhibits and Schedules, the statements in the body of this Agreement shall control.

18. Penalties for violation of law.

The Procurement Code, Sections 13-1-28 through 13-1-199, NMSA 1978, imposes civil and criminal penalties for its violation. In addition, the New Mexico criminal statutes impose felony penalties for illegal bribes, gratuities and kickbacks.

19. Equal Opportunity Compliance.

The Contractor agrees to abide by all federal and state laws and rules and regulations, and Santa Fe City Code, pertaining to equal employment opportunity. In accordance with all such laws of the State of New Mexico, the Contractor assures that no person in the United States shall, on the grounds of race, religion, color, national origin, ancestry, sex, age, physical or mental handicap, or serious medical condition, spousal affiliation, sexual orientation or gender identity, be excluded from employment with or participation in, be denied the benefits of, or be otherwise subjected to discrimination under any program or activity performed under this Agreement. If Contractor is found not to be in compliance with these requirements during the life of this Agreement, Contractor agrees to take appropriate steps tocorrect these deficiencies.

20. Applicable Law.

The laws of the State of New Mexico shall govern this Agreement, without giving effect to its choice of law provisions. Venue shall be proper only in a New Mexico court of competent jurisdiction in accordance with Section 38-3-1 (G) NMSA 1978. By execution of this Agreement, Contractor acknowledges and agrees to the jurisdiction of the courts of the State of New Mexico over any and all lawsuits arising under or out of any term of this Agreement.

21. Workers Compensation.

The Contractor agrees to comply with state laws and rules applicable to workers compensation benefits for its employees. If the Contractor fails to comply with the Workers Compensation Act and applicable rules when required to do so, this Agreement may be terminated by the City.

22. Professional Liability Insurance.

Contractor shall maintain professional liability insurance throughout the term of this Agreement providing a minimum coverage in the amount required under the New Mexico Tort Claims Act. The Contractor shall furnish the City with proof of insurance of Contractor's compliance with the provisions of this section as a condition prior to performing services under this Agreement.

23. Other Insurance

If the services contemplated under this Agreement will be performed on or in City facilities or property, Contractor shall maintain in force during the entire term of this Agreement, the following insurance coverage(s), naming the City as additional insured.

A. **Commercial General Liability** insurance shall be written on an occurrence basis and be a broad as ISO Form CG 00 01 with limits not less than $2,000,000 per occurrence and $2,000,000 in the aggregate for claims against bodily injury, personal and advertising injury, and property damage. Said policy shall include broad form Contractual Liability coverage and be endorsed to name the City of Santa Fe their officials, officers, employees, and agents as additional insureds.

B. **Business Automobile Liability** insurance for all owned, non-ownedautomobiles, with a combined single limit not less than $1,000,000 per accident.

C. **Broader Coverage and Limits.** The insurance requirements under this Agreement shall be the greater of (1) the minimum coverage and limits specified in this Agreement, or (2) the broader coverage and maximum limits of coverage of any insurance policy

or proceeds available to the Named Insured. It is agreed that these insurance requirements shall not in any way act to reduce coverage that is broader or that includes higher limits than the minimums required herein. No representation is made that the minimum insurance requirements of this Agreement are sufficient to cover the obligations of Contractor hereunder.

D. Contractor shall maintain the above insurance for the term of this Agreement and name the City as an additional insured and provide for 30 days cancellation notice on any Certificate of Insurance form furnished by Contractor. Such certificate shall also specifically state the coverage provided under the policy is primary over any other valid and collectible insurance and provide a waiver of subrogation.

24. Records and Financial Audit.

The Contractor shall maintain detailed time and expenditure records that indicate the date; time, nature and cost of services rendered during the Agreement's term and effect and retain them for a period of three (3) years from the date of final payment under this Agreement. The records shall be subject to inspection by the City. The City shall have the right to audit billings both before and after payment. Payment under this Agreement shall not foreclose the right of the City to recover excessive or illegal payments

25. Indemnification.

The Contractor shall defend, indemnify and hold harmless the City from all actions, proceeding, claims, demands, costs, damages, attorneys' fees and all other liabilities and expenses of any kind from any source which may arise out of the performance of this Agreement, caused by the negligent act or failure to act of the Contractor, its officers, employees, servants, subcontractors or agents, or if caused by the actions of any client of the Contractor resulting in injury or damage to persons or property during the time when the Contractor or any officer, agent, employee, servant or subcontractor thereof has or is performing services pursuant to this Agreement. In the event that any action, suit or proceeding related to the services performed by the Contractor or any officer, agent, employee, servant or subcontractor under this Agreement is brought against the Contractor, the Contractor shall, as soon as practicable but no later than two (2) days after it receives notice thereof, notify the legal counsel of the City.

26. New Mexico Tort Claims Act

Any liability incurred by the City of Santa Fe in connection with this Agreement is subject to the immunities and limitations of the New Mexico Tort Claims Act, Section 41-4-1, et. seq. NMSA 1978, as amended. The City and its "public employees" as defined in the New Mexico Tort Claims Act, do not waive sovereign immunity, do not waive any defense and do not waive any limitation of liability pursuant to law. No provision in this Agreement modifies or waives any provision of the New Mexico Tort Claims Act.

27. Invalid Term or Condition.

If any term or condition of this Agreement shall be held invalid or unenforceable, the remainder of this Agreement shall not be affected and shall be valid and enforceable.

28. Enforcement of Agreement.

A party's failure to require strict performance of any provision of this Agreement shall not waive or diminish that party's right thereafter to demand strict compliance with that or any other provision. No waiver by a party of any of its rights under this Agreement shall be effective unless express and in writing, and no effective waiver by a party of any of its rights shall be effective to waive any other rights.

29. Notices.

Any notice required to be given to either party by this Agreement shall be in writing and shall be delivered in person, by courier service or by U.S. mail, either first class or certified, return receipt requested, postage prepaid, as follows:

To the City:
City of Santa Fe
Wastewater Management Division
73 Paseo Real
Santa Fe, New Mexico 87507
(505) 955-4650

To the Contractor(s):

1) Allied 360 Construction, LLC
Contact: Patrick Herrera, Managing Member/Owner
P.O. Box 1913
Espanola, NM 87532
Ph: (505) 470-5779
Email: patrickherrera@ymail.com

2) Sub-Surface Contracting, Inc.
Contact: Neal J. Keiper / Owner-President
27 Paseo de River
Santa Fe, NM 87507
Ph: (505) 473-1000
Email:

3) TLC Plumbing, Inc.
Contact: Eddie Padilla, Chief Dev. Officer
5000 Edith Blvd. NE
Albuquerque, NM 87107
Ph: (505) 761-9696
Email:

30. Authority.

If Contractor is other than a natural person, the individual(s) signing this Agreement on behalf of Contractor represents and warrants that he or she has the power and authority to bind Contractor, and that no further action, resolution, or approval from Contractor is necessary to enter into a binding contract.

IN WITNESS WHEREOF, the Parties have executed this Agreement as of the date of the signature by the required approval authorities below.

CITY OF SANTA FE:

ALAN WEBBER, MAYOR

DATE: Dec 9, 2021

ATTEST:

KRISTINE BUSTOS MIHELCIC,
CITY CLERK
GB MTG 12/08/2021

CITY ATTORNEY'S OFFICE:

Marcos Martinez
Marcos Martinez (Jul 28, 2021 09:10 MDT)
SENIOR ASSISTANT CITY ATTORNEY

APPROVED FOR FINANCES:

MARY MCCOY, FINANCE DIRECTOR
5000362.520150; 5000367.520150
Org. Name/Org#. AJH
AJH

CONTRACTOR:
TLC PLUMBING, INC.

NAME: Eddie C. Padilla

TITLE: Chief Development Officer

DATE: 8/23/21

CRS# 02-226090-000
BRN# 222153

IN WITNESS WHEREOF, the Parties have executed this Agreement as of the date of the signature by the required approval authorities below.

CITY OF SANTA FE:

ALAN WEBBER, MAYOR

DATE: Dec 9, 2021

ATTEST:

KRISTINE BUSTOS MIHELCIC,
CITY CLERK
GB MTG 12/08/2021

CITY ATTORNEY'S OFFICE:

Marcos Martinez
Marcos Martinez (Jul 28, 2021 09:10 MDT)
SENIOR ASSISTANT CITY ATTORNEY

APPROVED FOR FINANCES:

MARY MCCOY, FINANCE DIRECTOR
5000362.520150; 5000367.520150
Org. Name/Org#. AJH
AJH

CONTRACTOR:

SUB SURFACE CONTRACTING, INC.

NAME:

TITLE: PRESIDENT

DATE: 8-26-21

CRS# 02-104256-000
BRN# 46991

IN WITNESS WHEREOF, the Parties have executed this Agreement as of the date of the signature by the required approval authorities below.

CITY OF SANTA FE:

ALAN WEBBER, MAYOR

DATE: Dec 9, 2021

ATTEST:

KRISTINE BUSTOS MIHELCIC, CITY CLERK
GB MTG 12/08/2021

CITY ATTORNEY'S OFFICE:

Marcos Martinez
Marcos Martinez (Jul 28, 2021 09:10 MDT)
SENIOR ASSISTANT CITY ATTORNEY

APPROVED FOR FINANCES:

MARY MCCOY, FINANCE DIRECTOR
5000362.520150; 5000367.520150
Org. Name/Org#. AJH
AJH

CONTRACTOR:
Allied 360 Construction, LLC.

NAME: Patrick Herrera
TITLE: Managing Member
DATE: 9/16/2021

CRS# 03-147576000-0
BRN# 231055

CITY OF SANTA FE
PURCHASING OFFICE
200 Lincoln Ave Room 122 Santa Fe, NM 87505
Fran Dunaway, CPO
21/46/B POTW On Call Repair and Replacement

	AWARDED ITEMS	1) Allied 360 Construction, LLC	2) Sub Surface Contracting, Inc.	3) TLC Plumbing, Inc.
ITEM #	ITEM & DESCRIPTION	PRICES	PRICES	PRICES
1	Point Repair, 6" to 8" pipe, remove and replace, 0' to 6 ' in depth including PVC pipe	$4,200.00	$3,550.00	$6,345.00
2	Point Repair, 6" to 8" pipe, remove and replace, 6' to 10' in depth including PVC pipe	$4,400.00	$4,650.00	$9,235.00
3	Point Repair, 6" to 8" pipe, remove and replace, 10' to 16' in depth including PVC pipe	$5,000.00	$8,300.00	$7,365.00
4	Point Repair Additional Cost for remove and replace, greater than 16' depth for 6" to 8" pipe including PVC pipe	$197.00	$1,685.00	$220.00
5	Point Repair, 10" to 15" pipe, remove and replace, 0' to 6 ' in depth including PVC pipe	$5,700.00	$4,450.00	$7,500.00
6	Point Repair, 10" to 15" pipe, remove and replace, 6' to 10' in depth including PVC pipe	$5,200.00	$6,700.00	$10,390.00
7	Point Repair, 10" to 15" pipe, remove and replace, 10' to 16' in depth including PVC pipe	$6,200.00	$9,350.00	$13,945.00
8	Point Repair Additional Cost for excavation greater than 16' depth for 10" to 15" pipe including PVC pipe	$239.00	$1,875.00	$220.00
9	Point Repair, 18" to 24" pipe, remove and replace, 0' to 6' in depth including PVC pipe	$7,600.00	$4,975.00	$11,250.00
10	Point Repair, 18" to 24" pipe, remove and replace, 6' to 10' in depth including PVC pipe	$8,600.00	$7,100.00	$13,255.00
11	Point Repair, 18" to 24" pipe, remove and replace, 10' to 16' in depth including PVC pipe	$9,500.00	$10,500.00	$16,810.00
12	Point Repair Additional Cost for excavation greater than 16' depth for 18" to 24" pipe including PVC pipe	$347.00	$1,875.00	$220.00
13	8" diameter SDR 26 PVC sewer pipe, furnish & place in open trench, complete in place.	$105.00	$75.00	$43.95
14	10" diameter SDR 26 PVC sewer pipe, furnish & place in open trench, complete in place.	$115.00	$85.00	$58.90
15	12" diameter SDR 26 PVC sewer pipe, furnish & place in open trench, complete in place.	$130.00	$95.00	$75.65
16	15" diameter SDR 26 PVC sewer pipe, furnish & place in open trench, complete in place.	$167.00	$105.00	$100.50
17	18" diameter SDR 26 PVC sewer pipe, furnish & place in open trench, complete in place.	$196.00	$125.00	$138.45
18	24" diameter SDR 26 PVC sewer pipe, furnish & place in open trench, complete in place.	$250.00	$140.00	$229.85
19	Trenching, Backfilling & Compaction for 8" to 10" diameter sewer pipe, 0' to 6' in depth, pipe not included, complete.	$25.00	$65.00	$64.20
20	Trenching, Backfilling & Compaction for 8" to 10" diameter sewer pipe, 6' to 10' in depth, pipe not included, complete.	$35.00	$85.00	$74.90
21	Trenching, Backfilling & Compaction for 8" to 10" diameter sewer pipe, 10' to 16' in depth, pipe not included, complete.	$47.00	$125.00	$109.20
22	Additional Cost for Trenching, Backfilling & Compaction greater than 16' depth for 8" to 10" pipe	$45.00	$255.00	$18.20
23	Trenching, Backfilling & Compaction for 12" to 15" diameter sewer pipe, 0' to 6' in depth, pipe not included, complete.	$60.00	$75.00	$64.20
24	Trenching, Backfilling & Compaction for12" to 15" diameter sewer pipe, 6' to 10' in depth, pipe not included, complete.	$75.00	$90.00	$74.90
25	Trenching, Backfilling & Compaction for 12" to 15" diameter sewer pipe, 10' to 16' in depth, pipe not included, complete.	$95.00	$140.00	$109.20
26	Additional Cost for Trenching, Backfilling & Compaction greater than 16' depth for 12" to 15" pipe	$110.00	$265.00	$19.85
27	Trenching, Backfilling & Compaction for 18" to 24" diameter sewer pipe, 0' to 6' in depth, pipe not included, complete.	$110.00	$80.00	$64.20

CITY OF SANTA FE
PURCHASING OFFICE
200 Lincoln Ave Room 122 Santa Fe, NM 87505
Fran Dunaway, CPO
21/46/B POTW On Call Repair and Replacement

	AWARDED ITEMS	1) Allied 360 Construction, LLC	2) Sub Surface Contracting, Inc.	3) TLC Plumbing, Inc.
ITEM #	ITEM & DESCRIPTION	PRICES	PRICES	PRICES
28	Trenching, Backfilling & Compaction for18" to 24" diameter sewer pipe, 6' to 10' in depth, pipe not included, complete.	$112.00	$95.00	$74.90
29	Trenching, Backfilling & Compaction for 18" to 24" diameter sewer pipe, 10' to 16' in depth, pipe not included, complete.	$125.00	$165.00	$136.50
30	Additional Cost for Trenching, Backfilling & Compaction greater than 16' depth for 18" to 14" pipe	$125.00	$275.00	$21.85
31	Pipe Displacement (bursting) 6" to 8" from M.H. to M.H.	$227.00	$498.00	$70.00
32	Pipe Displacement (bursting) 8" to 8" from M.H. to M.H.	$255.00	$585.00	$70.00
33	Pipe Displacement (bursting) 8" to 10" from M.H. to M.H.	$300.00	$610.00	$85.00
34	Traffic Control Residential –per Work Zone –per Day	$1,800.00	$1,220.00	$80.00
35	Traffic Control Non-Residential Major Collectors and Arterials – per Work Zone –per Day	$2,000.00	$1,395.00	$530.00
36	Asphalt Removal, Disposal & Replacement including 6" Base Course and 4" Asphalt	$2,250.00	$17,000.00	$7,550.00
37	Curb/Gutter Removal, Disposal and Replacement	$31.00	$80.00	$65.30
38	Sidewalk Removal, Disposal and Replacement	$41.00	$225.00	$98.45
39	New Manhole, 4' Diameter, type "C" or "E", 6' deep or less, including removal, disposal and restoration of surface, complete in place. Asphalt is separate bid item	$6,800.00	$6,500.00	$12,115.00
40	New Manhole, 4' Diameter, type "C" or "E", over 6' to 10' deep, including removal, disposal and restoration of surface, complete in place. Asphalt is separate bid item	$7,800.00	$8,500.00	$14,360.00
41	New Manhole, 4' Diameter, type "C" or "E", over 10' to 16' deep, including removal, disposal and restoration of surface, complete in place. Asphalt is separate bid item	$1,400.00	$12,000.00	$18,815.00
42	Additional Cost for depth greater than 16' depth for 4' Diameter Manhole	$1,100.00	$975.00	$560.00
43	New 12 inch thick Concrete Manhole Collar where none exists in Dirt Road or Easement area	$2,200.00	$1,550.00	$1,700.00
44	MH Wall Rehabilitation	$100.00	$600.00	$330.00
45	MH Inverts & Shelf Rehabilitation	$2,100.00	$2,400.00	$3,600.00
46	MH Inverts & Base Replacement	$6,200.00	$4,450.00	$20,370.00
47	Sewer Service Connection as part of a Point Repair/Open Trench	$4,250.00	$950.00	$4,320.00
48	Sewer Service Connection- as part of a Pipe Burst 0 to 6' in Depth including Asphalt Replacement.	$9,700.00	$1,450.00	$4,320.00
49	Sewer Service Connection- as part of a Pipe Burst 6' to 10' in Depth including Asphalt Replacement	$1,100.00	$1,825.00	$4,320.00
50	Sewer Service Connection- as part of a Pipe Burst 10' and Greater in Depth including Asphalt Replacement	$395.00	$4,800.00	$430.00
51	MH Cleaning (i.e. debris, roots, etc.)	$4,400.00	$1,275.00	$3,000.00
52	Adjust Existing MH F&C (from grade to 24" deep) including Concrete Collar (City Furnished F&C)	$4,200.00	$2,400.00	$3,800.00
53	Adjust Existing MH F&C (from 24" and deeper) including Concrete Collar(City Furnished F&C & Barrels)	$2,200.00	$2,850.00	$4,255.00
54	Easement Clearance and Grading for Access & Repair Work	$47.00	$250.00	$10.00
55	Rip Rap & Wire Mattress –New Installation	$5,000.00	$675.00	$800.00
56	Gabion Basket –New Installation	$1,100.00	$710.00	$650.00
57	4 to 6 inch Sewer Service Connection to Existing Manhole, 0 to 8 feet Deep -Core Drill	$1,200.00	$1,800.00	$3,415.00
58	4 to 6 inch Sewer Service Connection to Existing Manhole, Greater than 8 feet Deep -Core Drill	$2,400.00	$2,300.00	$340.00
59	Rock Excavation	$65.00	$375.00	$140.00
60	Select Fill Material-Delivered	$3,200.00	$1,295.00	$2,730.00

CITY OF SANTA FE
PURCHASING OFFICE
200 Lincoln Ave Room 122 Santa Fe, NM 87505
Fran Dunaway, CPO
21/46/B POTW On Call Repair and Replacement

	AWARDED ITEMS	**1) Allied 360 Construction, LLC**	**2) Sub Surface Contracting, Inc.**	**3) TLC Plumbing, Inc.**
ITEM #	ITEM & DESCRIPTION	PRICES	PRICES	PRICES
61	Smoke Testing-Supervisor	$14,000.00	$4,800.00	$10,000.00
62	Smoke Testing-Helper	$8,000.00	$3,600.00	$4,240.00
63	Smoke Testing Traffic Control Allowance	$5,000.00	$5,000.00	$5,000.00
64	Materials Testing - Allowance	$2,000.00	$2,000.00	$2,000.00
65	Street Cut Permits - Allowance	$2,000.00	$2,000.00	$2,000.00
	Total Base Bid Incl: allowances, mobilization, Demobilization, labor, materials, equipment, bonding, insurance, etc.	**$163,971.00**	**$166,293.00**	**$244,863.15**

Signature: P. Fred Heerbrandt, P.E.
P. Fred Heerbrandt, P.E. (Sep 20, 2024 14:45 MDT)

Email: pfheerbrandt@santafenm.gov

Signature:

Email: mldozier@santafenm.gov

CERTIFICATE OF LIABILITY INSURANCE

DATE (MM/DD/YYYY) 7/19/2024

THIS CERTIFICATE IS ISSUED AS A MATTER OF INFORMATION ONLY AND CONFERS NO RIGHTS UPON THE CERTIFICATE HOLDER. THIS CERTIFICATE DOES NOT AFFIRMATIVELY OR NEGATIVELY AMEND, EXTEND OR ALTER THE COVERAGE AFFORDED BY THE POLICIES BELOW. THIS CERTIFICATE OF INSURANCE DOES NOT CONSTITUTE A CONTRACT BETWEEN THE ISSUING INSURER(S), AUTHORIZED REPRESENTATIVE OR PRODUCER, AND THE CERTIFICATE HOLDER.

IMPORTANT: If the certificate holder is an ADDITIONAL INSURED, the policy(ies) must have ADDITIONAL INSURED provisions or be endorsed. If SUBROGATION IS WAIVED, subject to the terms and conditions of the policy, certain policies may require an endorsement. A statement on this certificate does not confer rights to the certificate holder in lieu of such endorsement(s).

PRODUCER License # 0757776 HUB International Insurance Services (SOW) 2905 Rodeo Park Drive East Building 6, Suite 100 Santa Fe, NM 87505	CONTACT NAME: Michelle Vialpando PHONE (A/C, No, Ext): (505) 992-1873 FAX (A/C, No): (866) 487-3972 E-MAIL ADDRESS: michelle.vialpando@hubinternational.com
INSURED Sub Surface Contracting Inc 27A Paseo De River St Santa Fe, NM 87507	INSURER(S) AFFORDING COVERAGE / NAIC # INSURER A : ACUITY, A Mutual Insurance Company 14184 INSURER B : Builders Trust of New Mexico INSURER C : INSURER D : INSURER E : INSURER F :

COVERAGES **CERTIFICATE NUMBER:** **REVISION NUMBER:**

THIS IS TO CERTIFY THAT THE POLICIES OF INSURANCE LISTED BELOW HAVE BEEN ISSUED TO THE INSURED NAMED ABOVE FOR THE POLICY PERIOD INDICATED. NOTWITHSTANDING ANY REQUIREMENT, TERM OR CONDITION OF ANY CONTRACT OR OTHER DOCUMENT WITH RESPECT TO WHICH THIS CERTIFICATE MAY BE ISSUED OR MAY PERTAIN, THE INSURANCE AFFORDED BY THE POLICIES DESCRIBED HEREIN IS SUBJECT TO ALL THE TERMS, EXCLUSIONS AND CONDITIONS OF SUCH POLICIES. LIMITS SHOWN MAY HAVE BEEN REDUCED BY PAID CLAIMS.

INSR LTR	TYPE OF INSURANCE	ADDL INSD	SUBR WVD	POLICY NUMBER	POLICY EFF (MM/DD/YYYY)	POLICY EXP (MM/DD/YYYY)	LIMITS	
A	X COMMERCIAL GENERAL LIABILITY CLAIMS-MADE X OCCUR X PD Ded: $500 GEN'L AGGREGATE LIMIT APPLIES PER: POLICY X PRO-JECT LOC OTHER:	X		Z75944	7/1/2024	7/1/2025	EACH OCCURRENCE DAMAGE TO RENTED PREMISES (Ea occurrence) MED EXP (Any one person) PERSONAL & ADV INJURY GENERAL AGGREGATE PRODUCTS - COMP/OP AGG	$ 1,000,000 $ 250,000 $ 10,000 $ 1,000,000 $ 3,000,000 $ 3,000,000
A	AUTOMOBILE LIABILITY X ANY AUTO OWNED AUTOS ONLY SCHEDULED AUTOS X HIRED AUTOS ONLY X NON-OWNED AUTOS ONLY			Z75944	7/1/2024	7/1/2025	COMBINED SINGLE LIMIT (Ea accident) BODILY INJURY (Per person) BODILY INJURY (Per accident) PROPERTY DAMAGE (Per accident)	$ 1,000,000 $ $ $
A	UMBRELLA LIAB X OCCUR X EXCESS LIAB CLAIMS-MADE DED X RETENTION $ 0			Z75944	7/1/2024	7/1/2025	EACH OCCURRENCE AGGREGATE	$ 2,000,000 $ 2,000,000
B	WORKERS COMPENSATION AND EMPLOYERS' LIABILITY ANY PROPRIETOR/PARTNER/EXECUTIVE OFFICER/MEMBER EXCLUDED? (Mandatory in NH) Y / N: Y If yes, describe under DESCRIPTION OF OPERATIONS below	N / A		0692	1/1/2024	1/1/2025	X PER STATUTE OTH-ER E.L. EACH ACCIDENT E.L. DISEASE - EA EMPLOYEE E.L. DISEASE - POLICY LIMIT	$ 2,000,000 $ 2,000,000 $ 2,000,000
A	Leased/Rented Eqpt			Z75944	7/1/2024	7/1/2025	Ded: $500 / Limit:	200,000

DESCRIPTION OF OPERATIONS / LOCATIONS / VEHICLES (ACORD 101, Additional Remarks Schedule, may be attached if more space is required)

.

SEE ATTACHED ACORD 101

CERTIFICATE HOLDER

City of Santa Fe
Wastewater Division
Attn: Stan Holland
73 Paseo Real
Santa Fe, NM 87507

CANCELLATION

SHOULD ANY OF THE ABOVE DESCRIBED POLICIES BE CANCELLED BEFORE THE EXPIRATION DATE THEREOF, NOTICE WILL BE DELIVERED IN ACCORDANCE WITH THE POLICY PROVISIONS.

AUTHORIZED REPRESENTATIVE



ACORD 25 (2016/03) © 1988-2015 ACORD CORPORATION. All rights reserved.
The ACORD name and logo are registered marks of ACORD

AGENCY CUSTOMER ID: SUBSURF-01 DONISCHUK

LOC #: 1

ADDITIONAL REMARKS SCHEDULE

AGENCY	License # 0757776	NAMED INSURED
HUB International Insurance Services (SOW)		Sub Surface Contracting Inc 27A Paseo De River St Santa Fe, NM 87507
POLICY NUMBER		
SEE PAGE 1		
CARRIER	NAIC CODE	EFFECTIVE DATE: SEE PAGE 1
SEE PAGE 1	SEE P 1	

ADDITIONAL REMARKS

THIS ADDITIONAL REMARKS FORM IS A SCHEDULE TO ACORD FORM,

FORM NUMBER: ACORD 25 FORM TITLE: Certificate of Liability Insurance

Description of Operations/Locations/Vehicles:
Where required by written contract or agreement, the City of Santa Fe, Wastewater Division, City Representative, other parties reasonably requested in writing by the City of Santa Fe, and their officials, members, officers, employees, and agents are included as additional insured with respects to general liability, on a primary & non-contributory basis.

© 2008 ACORD CORPORATION. All rights reserved.
The ACORD name and logo are registered marks of ACORD

ADDITIONAL INSURED - OWNERS, LESSEES OR CONTRACTORS - AUTOMATIC STATUS WHEN REQUIRED IN CONSTRUCTION AGREEMENT WITH YOU **CG-2033R(6-13)**

This endorsement modifies insurance provided under the following:

COMMERCIAL GENERAL LIABILITY COVERAGE PART

1. Section II - Who Is An Insured is amended to include as an additional insured:

a. Any person or organization for whom you are performing operations when you and such person or organization have agreed in writing in a contract or agreement that such person or organization be added as an additional insured on your policy; and

b. Any other person or organization you are required to add as an additional insured under the contract or agreement described in paragraph a above.

Such person or organization is an additional insured only with respect to liability for *bodily injury, property damage* or *personal and advertising injury* caused, in whole or in part, by:

a. Your acts or omissions; or

b. The acts or omissions of those acting on your behalf;

in the performance of your ongoing operations for the additional insured.

However the insurance afforded to such additional insured:

a. Only applies to the extent permitted by law; and

b. Will not be broader than that which you are required by the contract or agreement to provide for such additional insured.

A person's or organization's status as an additional insured under this endorsement ends when your operations for that additional insured are completed.

2. With respect to the insurance afforded these additional insureds, the following additional exclusions apply:

This insurance does not apply to:

a. *Bodily injury, property damage* or *personal and advertising injury* arising out of the rendering of, or the failure to render, any professional architectural, engineering or surveying services, including:

(1) The preparing, approving or failing to prepare or approve maps, shop drawings, opinions, reports, surveys, field orders, change orders or drawings and specifications; or

(2) Supervisory, inspection, architectural or engineering activities.

This exclusion applies even if the claims against any insured allege negligence or other wrongdoing in the supervision, hiring, employment, training or monitoring of others by that insured, if the *occurrence* which caused the *bodily injury* or *property damage* involved the rendering of or the failure to render any professional architectural, engineering or surveying services.

b. *Bodily injury* or *property damage* occurring after:

(1) All work, including materials, parts or equipment furnished in connection with such work, on the project (other than service, maintenance or repairs) to be performed by or on behalf of the additional insured(s) at the location of the covered operations has been completed; or

(2) That portion of *your work* out of which the injury or damage arises has been put to its intended use by any person or organization other than another contractor or subcontractor engaged in performing operations for a principal as a part of the same project.

3. With respect to the insurance afforded to these additional insureds, the following is added to Section III - Limits Of Insurance:

The most we will pay on behalf of the additional insured is the amount of insurance:

a. Required by the contract or agreement you have entered into with the additional insured; or

b. Available under the applicable Limits of Insurance shown in the Declarations;

whichever is less.

This endorsement shall not increase the applicable Limits of Insurance shown in the Declarations.

ADDITIONAL INSURED - COMPLETED OPERATIONS AUTOMATIC STATUS WHEN REQUIRED IN CONSTRUCTION AGREEMENT WITH YOU (OWNERS, LESSEES OR CONTRACTORS) **CG-7277(6-13)**

This endorsement modifies insurance provided under the following:

COMMERCIAL GENERAL LIABILITY COVERAGE PART

PRODUCTS-COMPLETED OPERATIONS LIABILITY COVERAGE FORM

1. Section II - Who Is An Insured is amended to include as an additional insured:

a. Any person(s) or organization(s) for whom you have performed operations if you and such person(s) or organization(s) have agreed in writing in a contract or agreement that such person(s) or organization(s) be added as additional insured on your policy for completed operations; and

b. Any other person(s) or organization(s) you are required to add as an additional insured under the contract or agreement described in paragraph a above.

Such person or organization is an additional insured only with respect to liability included in the *products-completed operations hazard* for *bodily injury* or *property damage* caused, in whole or in part, by *your work* performed for that additional insured at the location designated and described in the contract or agreement.

However:

a. The insurance afforded to such additional insured only applies to the extent permitted by law; and

b. If coverage provided to the additional insured is required by a contract or agreement, the insurance afforded to such additional insured will not be broader than that which you are required by the contract or agreement to provide for such additional insured.

2. This insurance does not apply to:

a. *Bodily injury* or *property damage* which occurs prior to the execution of the contract or agreement described in item 1; or

b. *Bodily injury* or *property damage* that occurs after the time period during which the contract or agreement described in item 1 requires you to add such person or organization onto your policy as an additional insured for completed operations; or

c. *Bodily injury* or *property damage* arising out of the rendering of, or the failure to render, any professional, architectural, engineering or surveying services, including:

(1) The preparing, approving or failing to prepare or approve maps, shop drawings, opinions, reports, surveys, field orders, change orders or drawings and specifications; or

(2) Supervisory, inspection, architectural or engineering activities.

This exclusion applies even if the claims against any insured allege negligence or other wrongdoing in the supervision, hiring, employment, training or monitoring of others by that insured, if the *occurrence* which caused the *bodily injury* or *property damage* involved the rendering of or the failure to render any professional services by or for you.

3. With respect to the insurance afforded to these additional insureds, the following is added to Section III - Limits Of Insurance:

If coverage provided to the additional insured is required by a contract or agreement, the most we will pay on behalf of the additional insured is the amount of insurance:

a. Required by the contract or agreement; or

b. Available under the applicable Limits of Insurance shown in the Declarations;

whichever is less.

This endorsement shall not increase the applicable Limits of Insurance shown in the Declarations.

PRIMARY AND NONCONTRIBUTORY - OTHER INSURANCE CONDITION **CG-2001R(4-13)**

This endorsement modifies insurance provided under the following:

COMMERCIAL GENERAL LIABILITY COVERAGE PART

PRODUCTS-COMPLETED OPERATIONS LIABILITY COVERAGE FORM

RESIDENTIAL CARE FACILITY LIABILITY COVERAGE PART

The following is added to the Other Insurance Condition and supersedes any provision to the contrary:

Primary And Noncontributory Insurance

This insurance is primary to and will not seek contribution from any other insurance available to an additional insured under your policy provided that:

(1) The additional insured is a Named Insured under such other insurance; and

(2) You have agreed in writing in a contract or agreement that this insurance would be primary and would not seek contribution from any other insurance available to the additional insured.

GB SUB SURFACE AMEND 1_NEW MEMO PACKET int 2 final

Interim Agreement Report 2024-10-30

Created:	2024-10-25
By:	JIMMY TAPIA (jptapia@santafenm.gov)
Status:	Out for Signature
Transaction ID:	CBJCHBCAABAAdcv38BSKQC23atXsPE3YQSMr3lTaWxbX

Agreement History

Agreement history is the list of the events that have impacted the status of the agreement prior to the final signature. A final audit report will be generated when the agreement is complete.

"GB SUB SURFACE AMEND 1_NEW MEMO PACKET int 2 final" History

Document created by JIMMY TAPIA (jptapia@santafenm.gov)
2024-10-25 - 5:35:10 PM GMT- IP address: 63.232.20.2

Document emailed to ajhopkins@santafenm.gov ajhopkins@santafenm.gov (ajhopkins@santafenm.gov) for signature
2024-10-25 - 5:40:41 PM GMT

Email viewed by ajhopkins@santafenm.gov ajhopkins@santafenm.gov (ajhopkins@santafenm.gov)
2024-10-25 - 5:47:56 PM GMT- IP address: 104.47.65.254

Document e-signed by ajhopkins@santafenm.gov ajhopkins@santafenm.gov (ajhopkins@santafenm.gov)
Signature Date: 2024-10-25 - 5:48:16 PM GMT - Time Source: server- IP address: 63.232.20.2

Document sent to JoAnn Lovato (jdlovato@santafenm.gov) and Travis Dutton-Leyda (tkduttonleyda@santafenm.gov) for signature. One of them to sign
2024-10-25 - 5:48:19 PM GMT

Email viewed by Travis Dutton-Leyda (tkduttonleyda@santafenm.gov)
2024-10-25 - 6:53:06 PM GMT- IP address: 63.232.20.2

Email viewed by JoAnn Lovato (jdlovato@santafenm.gov)
2024-10-25 - 9:59:25 PM GMT- IP address: 73.228.7.52

Document e-signed by JoAnn Lovato (jdlovato@santafenm.gov)
Signature Date: 2024-10-25 - 10:01:24 PM GMT - Time Source: server- IP address: 73.228.7.52

Powered by Adobe Acrobat Sign

Document emailed to EMILY OSTER (ekoster@santafenm.gov) for signature

2024-10-25 - 10:01:28 PM GMT

Email viewed by EMILY OSTER (ekoster@santafenm.gov)

2024-10-30 - 3:21:58 PM GMT- IP address: 104.47.64.254

Document e-signed by EMILY OSTER (ekoster@santafenm.gov)

Signature Date: 2024-10-30 - 3:23:30 PM GMT - Time Source: server- IP address: 63.232.20.2

Document emailed to JOHN BLAIR (jwblair@santafenm.gov) for signature

2024-10-30 - 3:23:33 PM GMT

CITY OF SANTA FE

Date: October 21, 2024

To: Mayor Alan Webber and Governing Body October 30, 2024
Finance Committee October 28, 2024
Public Works & Public Utilities October 21, 2024

Via: John Dupuis, Public Utilities Department Director JD
Debora Trujillo, Interim Division Director DT

From: Lawrence Garcia, Environmental Services Fleet Manager LG

Subject: Closed Landfill Management

Vendor Name: INTERA Inc.

Vendor Number: 1038

ITEM AND ISSUE:
Public Utilities Department respectfully requests Request your review and approval of Amendment #2 to provide Regulatory Groundwater Monitoring, Soil Vapor Monitoring and other Environmental and Engineering Services for Frank Ortiz Park Landfill in the total additional amount of $229,132.72, for a total Contract amount of $528,621.73. Lawrence Garcia lmgarcia@santafenm.gov, (505) 955-2241.

Public Utilities Department respectfully request approval of a Budget Increase to the Environmental Services Division Enterprise Fund, from Fund 510 Cash Balance, in the total amount of 229,134. This increase is to satisfy regulatory requirements mandated by New Mexico Environment Division for Frank Ortiz Park closed landfill.

The City of Santa Fe entered a contract with INTERA Inc on September 25, 2023, via the utilization of a competitively bid contract by the City of Albuquerque, RFB #RFB-2022-322-DSW-CG which was awarded on February 1, 2023, contract #SHR000022790-Item # 23-0578 and expires on 1/31/2027. The City of Santa Fe is in the final stages of releasing an RFP for this type of work. By regulations the City must continue required monitoring and reporting to the State Regulators.

BACKGROUND AND SUMMARY:
The City of Santa Fe owns to two closed landfills. The Paseo de Vistas Landfill closed under the federal Resource Conservation and Recovery Act (RCRA) in the 1990's and is overseen by the NMED Solid Waste Bureau (SWB) according to its' Landfill Closure Plan filed by the city. The Frank Ortiz disposal site was closed before the Paseo landfill and is now the Frank Ortiz Dog Park. It is not regulated under RCRA and is overseen by the NMED Ground Water Bureau (GWQB) because closure occurred prior to the implementation

of the NMED solid waste regulations for landfill closure. Both sites must comply with the required quarterly and semi-annual monitoring, as specified by their closure plans.

The City of Santa Fe received notice from (NMED), (GWQB), of requirements in accordance with subsection 411.B of the New Mexico Ground and Surface Water Protection Regulations (20.6.2), and are requiring a modification to the current State 1 Abatement Plan, to include ascertain of potential vapor pathways exist, expansion of up-gradient well monitoring, expand on dioxane tested, and installation of one additional ground water well down gradient, to include both water and gases.

PROCUREMENT METHOD:
The procurement method was via the City of Albuquerque Procurement Contract #SHR000022790 which was approved on February 1, 2023. The Contractor has agreed to afford the City of Santa Fe the same term and conditions.

Chief Procurment Officer Approval: _____ Date: Oct 24, 2024

CONTRACT NUMBER:
The FY25 Munis contract number is 3204358

Fund Name/Number: Environmental Services Enterprise Fund 510
Munis Org Name/Number: Admin/Operations 5100331
Munis Object Name/Number: Professional Contracts /510300

Budget Officer Approval: *Andy Hopkins* Date: Oct 23, 2024
Comment/Exceptions: _____

Grant ☐Yes | ☒ No

Grant #: *N/A*

Grant Manager/Accounting Officer Approval: N/A **Date:**
Comment/Exceptions: _____

Project ☐Yes | ☒ No

Project Ledger #: N/A

CAPITAL ASSET (will this procurement result in a tangible item that costs more than $5,000
☐Yes | ☒ No

Asset # (if known): N/a

Repair or Replacement of Existing Equipment:

☐Yes | ☒ No
~If yes -> ☐Repair | ☐ Replacement

Please explain: N/A

Capital Project:
(New and improvement projects that are going to cost $10,000 or more)
☐ **Yes** | ☒ **No**

Anticipated length of project: N/A

Asset Manager Approval: N/A **Date:**
Comment/Exceptions:

Was this service deemed construction: ☐ **Yes** | ☒ **No**
~If yes, does this expenditure exceed $25,000? ☐ **Yes** | ☐ **No**
~If yes, did you obtain the appropriate bond? ☐ **Yes** | ☐ **No**
~Performance and Payment & Labor - NMSA 1978, Section 13-4-18

Department Approvals:
IT Components: ☐ **Yes** | ☒ **No**
Vehicles: ☐ **Yes** | ☒ **No**
Facilities, Furniture, Fixtures, Equipment: ☐ **Yes** | ☒ **No**

Approval: **Title:** **Date:**
Approval: **Title:** **Date:**
Comment & Exceptions:

Department Contract Administrator Contact Info:

ATTACHMENTS:
Vendor's Quote
Santa Fe Business License – No longer needed for contracts/purchases (delete this line)
Certificate of Liability Insurance
Bar Request
Amendment 1
Primary Contract Item 23-0578
Vendor Letter assuring price match

Item#
Munis Contract #3204358
Original Contract Item# 23-0578
SWPA/GSA/Coop/RFP/ITB #: SHR.000022790

CITY OF SANTA FE
AMENDMENT No.2 TO
PROFESSIONAL SERVICES CONTRACT
ITEM#23-0578

This AMENDMENT No 2. (the "Amendment") amends the CITY OF SANTA FE PROFESSIONAL SERVICES CONTRACT, dated September 25, 2023, (the "Contract"), between the City of Santa Fe (the "City") and INTERA Inc. (the "Contractor"). The date of this Amendment shall be the date when it is executed by the City and the Contractor

whichever occurs last.

RECITALS:

A. Under the terms of the Contract, Contractor has agreed to provide the Ground Water Monitoring, Vapor Monitoring, Other Environmental and Engineering Services and Reporting for two City of Santa Fe closed landfills.

B. Pursuant to Article 14 of the Contract, and for good and valuable consideration, the receipt and sufficiency of which are acknowledged by the parties, the City and the Contractor agree as follows:

1. COMPENSATION.

Article 3, paragraph A of the original Contract is amended to increase the amount of compensation by a total of two hundred twenty-nine thousand one hundred thirty-two dollars and seventy-two cents ($229,132.72) so that Article 3, paragraph A reads in its entirety as follows:

A. The City shall pay the Contractor in full payment for services satisfactorily performed as described in Exhibit "A" of the contract. The total amount payable to the contractor under this Agreement, including gross

receipts tax and expenses, shall not exceed five hundred twenty-eight thousand six hundred twenty-one dollars and seventy-three cents ($528,621.73). This amount is a maximum and not a guarantee that the work assigned to be performed by the Contractor under this Agreement shall equal the amount stated herein. The parties do not intend for the Contractor to continue to provide services without compensation when the total compensation amount is reached. Contractor is responsible for notifying the city when the services provided under this Agreement reach the total compensation amount. In no event will the Contractor be paid for services provided in excess of the total compensation amount without this Agreement being amended in writing prior to those services in excess of the total compensation amount being provided.

2. CONTRACT IN FULL FORCE.

Except as specifically provided in this Amendment, the Contract remains and shall remain in full force and effect, in accordance with its terms.

IN WITNESS WHEREOF, the parties have executed this Amendment No.2 to the Contract as of the dates set forth below.

CITY OF SANTA FE:

_____
ALLAN WEBBER, CITY MAYOR

DATE:_____

CONTRACTOR:
Intera Incorporated

Joseph Tracy
_____
Joseph Tracy, Vice President

DATE: Oct 8, 2024

CRS# 74-3010638

Registration #=227829

ATTEST:

_____
GERALYN CARDENAS, INTERIM CITY CLERK

CITY ATTORNEY'S OFFICE:

Marcos Martinez
Marcos Martinez (Oct 8, 2024 16:41 MDT)
SENIOR ASSISTANT CITY ATTORNEY

APPROVED FOR FINANCES:

Emily K. Oster
_____

EMILY OSTER, FINANCE DIRECTOR

Log # {Finance use only}:	
Journal # {Finance use only}:	

City of Santa Fe, New Mexico
BUDGET AMENDMENT RESOLUTION (BAR)

DEPARTMENT / DIVISION NAME	DATE
Public Utilities/Environmental Services	10/21/2024

ITEM DESCRIPTION	ORG	OBJECT	PROJECT	INCREASE	DECREASE
EXPENDITURES				{enter as positive #}	{enter as negative #}
Professional Contracts	5100331	510300		229,134	
REVENUES				{enter as negative #}	{enter as positive #}
				$ 229,134	$ -

JUSTIFICATION: *(use additional page if needed)*
--Attach supporting documentation/memo

Budget Increase from Fund 510 Cash Balances: Enviornmental Services Division Enterprise Fund.

See attached memo for additional information.

{Complete section below if BAR results in a net change to ANY Fund}	
Fund(s) Affected	Fund Balance Increase/(Decrease)
510 Cash Balance	
TOTAL:	(229,134)

Lawrence Garcia — 9/23/2024
Prepared By {print name} — Date

DEBORA TRUJILLO (Sep 25, 2024 09:54 MDT) — Sep 25, 2024
Division Director Signature {optional} — Date

John Dupuis (Sep 26, 2024 20:00 MDT) — Sep 26, 2024
Department Director Signature — Date

{Use this form for Finance Committee/ City Council agenda items ONLY}

CITY COUNCIL APPROVAL

City Council Approval Date:

Agenda Item #:

Andy Hopkins — Oct 23, 2024
Budget Officer — Date

Emily K. Oster — Oct 24, 2024
Finance Director {≤ $5,000} — Date

City Manager {≤ $60,000} — Date

Via Email

May 31, 2024

Sandra Gabaldon
Environmental Compliance Specialist
City of Santa Fe
801 West San Mateo Road
Santa Fe, New Mexico 87504
sgabaldon@santafenm.gov

Re: Modification to Stage 1 Abatement Plan Required, Former Frank Ortiz Landfill, City of Santa Fe, New Mexico

Dear Sandra Gabaldon,

In accordance with Subsection 4111.B of the New Mexico Ground and Surface Water Protection Regulations (20.6.2 NMAC), this letter is to inform you the New Mexico Environment Department (NMED) Ground Water Quality Bureau (GWQB) requires modification to the current Stage 1 Abatement Plan (S1AP) for the aforementioned property (Site). On May 30, 2024, GWQB met with the City of Santa Fe (COSF) to review the ongoing abatement progress at the Site. At the meeting, NMED GWQB and the COSF revisited several outstanding components with respect to Site characterization and determined modification to the current Site S1AP is the best path forward to address the data gaps.

Please submit a modified Site S1AP proposal and associated implementation schedule within 120 days of the date of this correspondence that incorporates the following elements in support of ongoing Site characterization:

1. Continuance of quarterly Site surface emission monitoring (SEM) in accordance with the NMED-conditionally approved S1AP SEM modification proposal, dated October 25, 2021, until a minimum of 8 consecutive SEM events are complete. On completion, the COSF shall provide an SEM completion report documenting conclusions and recommendations, as appropriate, for a long-term SEM program at the Site.
2. Due diligence to ascertain whether a potential vapor intrusion (VI) pathway exists for the two nearest residential properties located approximately 180 feet east of the Site. At a minimum, this task should include a review of available building and utility specifications and a field reconnaissance to identify any Site-specific structure or feature that may impede or redirect the natural upward diffusion of Site vapors toward the properties of interest.
3. Installation, development, and sampling of groundwater and soil vapor monitoring points north and east of current locations SV-03 and SV-05/Ortiz Park-3 to quantify downgradient impacts, if any, of the landfill waste mass on these media.
4. Expansion of the routine Site-wide groundwater monitoring and reporting program to include one or more groundwater wells associated with the upgradient COSF Paseo de Vista Landfill for all Site constituents of concern.

5. Completion of a single Site-wide groundwater sampling event to determine the presence or absence (no detection) of one or more emergent contaminants commonly associated with landfills, specifically per-and polyfluoroalkyl substances and 1,4-Dioxane. (Note: this special sampling event must include groundwater wells referenced in tasks 3 and 4 above).
6. A corrective action plan to address the stormwater issues that appear to seasonally impact portions of the Site south and east of the abandoned PVD-1/MW-1 location to minimize water infiltration in this area. This area is proximal to the dominant buried waste mass, where wet conditions may locally foster accelerated methane generation and contaminant leaching.
7. Continuance of an appropriate comprehensive Site subsurface soil gas and landfill gas monitoring program.
8. Updated reporting schedule for both routine and key progress deliverables, adjusted to include the additional S1AP elements referenced herein.

If you have questions concerning this correspondence, please contact Kate Herrell at 505-670-1796 or kate.herrell@env.nm.gov or ros.general@env.nm.gov.

Sincerely,

Justin Ball

Digitally signed by Justin Ball
Date: 2024.05.31 11:49:52 -06'00'

Justin Ball, Chief
Ground Water Quality Bureau

cc: Joe Tracy, INTERA, jtracy@intera.com
George Schuman, NMED GWQB ROS
Paul Chamberlain, NMED GWQB ROS-SCP
Kate Herrell, NMED GWQB ROS-SCP
ROS Reading File

INTERA Incorporated
2440 Louisiana Blvd. NE, Suite 700
Albuquerque, NM 87110
+1 (505) 246 1600
INTERA.com

September 5, 2024

Sandra Gabaldon
Environmental Compliance Specialist
City of Santa Fe
801 West San Mateo Road
Santa Fe, New Mexico 87504

RE: Modification to Stage 1 Abatement Plan Proposal and Cost Estimate, Former Frank Ortiz Landfill, City of Santa Fe, New Mexico

Dear Ms. Sandra Gabaldon,

INTERA Incorporated (INTERA) is pleased to provide this proposal and cost estimate to the City of Santa Fe (COSF) to modify the Stage 1 Abatement Plan (S1AP) for the Former Frank Ortiz Landfill (Site) as requested by the New Mexico Environment Department (NMED) Groundwater Quality Bureau (GWQB) on May 31, 2024 (NMED, 2024). NMED GWQB representatives and met with the COSF and INTERA to review the ongoing abatement progress at the Site and modification to the current Site S1AP was determined to be the best path forward to address the data gaps. The proposed modifications requested by NMED GWQB includes the following eight (8) tasks in support of ongoing Site monitoring:

1. Continuance of quarterly Site surface emission monitoring (SEM) in accordance with the NMED-conditionally approved S1AP SEM modification proposal, dated October 25, 2021, until a minimum of 8 consecutive SEM events are complete. On completion, the COSF shall provide an SEM completion report documenting conclusions and recommendations, as appropriate, for the long-term SEM program at the Site.

2. Due diligence to ascertain whether a potential vapor intrusion (VI) pathway exists for the two nearest residential properties located approximately 180 feet east of the Site. At a minimum, this task should include a review of available building and utility specifications and a field reconnaissance to identify any Site-specific structure or feature that may impede or redirect the natural upward diffusion of Site vapors toward the properties of interest.

3. Installation, development, and sampling of groundwater and soil vapor monitoring points north and east of current locations SV-03 and SV-05/Ortiz Park-3 to quantify downgradient impacts, if any, of the landfill waste mass on these media.

4. Expansion of the routine Site-wide groundwater monitoring and reporting program to include one or more of the existing groundwater monitoring wells associated with the COSF Paseo de Vista Landfill for all Site constituents of concern.

5. Completion of a single Site-wide groundwater sampling event to determine the presence or absence (no detection) of one or more emergent contaminants commonly associated with landfills, specifically per-and polyfluoroalkyl substances (PFAS) and 1,4-Dioxane. (Note: this special sampling event must include the groundwater wells referenced in tasks 3 and 4 above).

6. A corrective action plan to address the stormwater issues that appear to seasonally impact portions of the Site south and east of the abandoned PVD-1/MW-1 location to minimize water infiltration in this area. This area is proximal to the dominant buried waste mass, where wet conditions may locally foster accelerated methane generation and contaminant leaching.

7. Continuance of an appropriate comprehensive Site subsurface soil gas and landfill gas monitoring program.

8. Updated reporting schedule for both routine and key progress deliverables, adjusted to include the additional S1AP elements referenced herein.

Scope of Services

The following sections describe how each Task above will be addressed in the proposed S1AP Modification.

Task 1- SEM Completion and Reporting

Site SEM activities are currently ongoing. Once 8 consecutive SEM events are complete, INTERA will provide a SEM completion report to the COSF documenting conclusions and recommendations, as appropriate, for a long-term SEM program at the Site.

Task 2- Vapor Intrusion Pathway Investigation

To determine whether a potential VI pathway exists for the two residential properties of interest (**Figure 1**), INTERA will perform a document review and field reconnaissance and present the findings in a future Site monitoring report. The document review will consist of (1) obtaining and reviewing public building plans and/or construction plans for the two residential properties of interest to look for information on their subsurface design (e.g., basements, crawl space, slab-on-grade construction) and (2) obtaining and reviewing utility layouts (e.g., water, sewer, and electrical) and identifying any utility corridors that might act as preferential pathways for vapor migration. The field reconnaissance will consist of a walking survey of the Site near the residential properties and surrounding area, documenting any site-specific structures or features that may impede or redirect vapor diffusion (e.g., retaining walls, large underground utilities, impermeable surfaces). If warranted, New Mexico One-Call may be contacted to mark the underground utilities in the vicinity of the residential properties.

Findings will be compiled and presented in a future Site monitoring report. The findings presented will include a utility map or schematics, photographs from the field reconnaissance and any other relevant data.

Task 3- Dual Purpose Soil Vapor/Groundwater Monitoring Well Installation

Task 3, the installation of one (1) dual purpose groundwater monitoring/soil vapor monitoring well, includes the following subtasks, which are described in detail below:

- Task 3a- Project Planning
- Task 3b- Soil boring advancement
- Task 3c- Groundwater and soil vapor monitoring well installation
- Task 3d- Monitoring well survey

Task 3a – Project Planning

The first subtask of Task 3 is project planning and will include the following:

- Apply for a well permit from the New Mexico Office of the State Engineer (OSE).
- Execute subcontractor agreements for a licensed well driller, a surveyor, and an investigation-derived waste (IDW) disposal company.
- Contact New Mexico One Call to mark utility locations
- Contact Ms. Kate Herrell, NMED GWQB Project Manager to provide her with INTERA's schedule for performing investigation activities.
- Update the existing Site-Specific Health and Safety Plan (SSHASP), which will be reviewed and approved by the INTERA health and safety officer prior to performing field activities and will be available on-site during performance of all field activities.
- Schedule INTERA resources, such as a geologist, an environmental scientist, or an engineer to oversee and/or perform field activities and reporting.
- Secure field equipment from the INTERA equipment pool or from an outside vendor.

Task 3b- Soil Boring Advancement

One soil boring will be advanced at the Site and will be completed as dual-purpose groundwater/soil vapor monitoring well north and east of current locations SV-03 and SV-05/Ortiz Park-3 to quantify downgradient impacts, if any, of the landfill waste mass on these media. The proposed location of this monitoring well is illustrated in **Figure 2.**

Drilling will be completed using Rotosonic drilling techniques. A carbide button drilling bit will be used in conjunction with Rotosonic drilling methods and advanced with an 8-in outer diameter (OD) overshot casing and 6-in core barrel to a maximum depth of approximately 375 feet below ground surface (ft bgs).

All recovered soil shall be classified according to the Unified Soil Classification System (USCS) and in accordance with ASTM International (ASTM) Standard D 2488–17, *Standard Practice for Description and Identification of Soils (Visual-Manual Procedure)* (ASTM, 2017).

Soil samples will be screened for the presence of VOCs using a photoionization detector (PID) equipped with a 10.6-electron volt lamp in accordance with INTERA's soil field screening SOP (INTERA, 2015b). PID readings will be recorded on the soil boring log.

Two soil samples will be collected from the soil boring. One sample will be collected from just below the total depth of the waste, and one collected at the water table interface per INTERA soil sampling SOP (INTERA, 2016b). The soil samples will be analyzed for the following:

- VOCs via United States Environmental Protection Agency (EPA) Method 8260B (using methanol extraction);
- Semi-Volatile Organic Compounds (SVOCs), which will include polynuclear aromatic hydrocarbons (PAHs) via EPA Method 8270 (selective ion monitoring [SIM]);
- NMED-designated metals (i.e., arsenic, barium, cadmium, chromium, lead, selenium, silver, uranium, copper, iron, manganese, zinc, aluminum, boron, cobalt, molybdenum, and nickel) by either EPA Method 6010C or 6020 and Mercury by 7470/7471/245.2;
- Polychlorinated biphenyls (PCBs) by EPA Method 8082 (SIM); and,
- Nitrate/nitrite by EPA Method 300.0 and ammonia and total Kjeldhal nitrogen by Standard Method (SM) 4500.

The anticipated investigation derived waste (IDW) generated as part of this task includes drill cuttings, decontamination water generated during drilling activities, disposable personal protective equipment, and miscellaneous waste. IDW will be containerized and is proposed to be disposed of as non-hazardous waste. One representative IDW soil sample will be collected and analyzed for the following:

- VOCs by EPA Method 8260;
- TCLP eight RCRA Metals (As, Ba, Cd, Cr, Pb, Hg, Se, Ag);
- Total Petroleum Hydrocarbons (TPH) Motor Oil Range Organics (MRO)/Diesel Range Organics (DRO)/Gasoline Range Organics (GRO) by EPA Method 8015B;
- Paint Filter Test; and,
- Reactivity, Ignitability, and Corrosivity (RCI).

If analytical results indicate that the IDW is hazardous waste, this will result in potential additional disposal expenses may be necessary and, if so, INTERA will prepare a change order for review/approval by the COSF.

Disposable PPE (disposable nitrile gloves) and miscellaneous waste (paper towels, plastic sheeting, etc.) will be containerized in plastic bags, sealed, and disposed of as municipal solid waste by INTERA. All re-used sampling equipment will be decontaminated per INTERA's equipment decontamination SOP (INTERA, 2016a).

Task 3c- Monitoring Well Installation

The soil boring will be completed as a groundwater monitoring well coupled with permanent soil vapor sampling ports (one shallow, one intermediate, and one deep). To be consistent with the other three on-site soil vapor monitoring wells, the shallow, intermediate, and deep vapor sampling ports will be installed at approximately 10, 30, and 40 ft bgs. The newly installed monitoring wells will be developed immediately after installation per INTERA's well development SOP (INTERA, 2015c). Development water will be containerized in 55-gallon drums and this liquid IDW will be analyzed (see Task 3b above).

The soil boring will be completed as a 4-inch diameter monitoring well, constructed of 4-inch diameter, flush-threaded, schedule 80 PVC, with 30 feet of 0.020-inch slot screen (10 ft below the water table and 20 ft above the water table) and blank casing to the ground surface, following the INTERA monitoring well installation SOP (INTERA, 2015a). The total depth of the proposed monitoring well will be approximately 370 ft bgs based on historic groundwater levels observed in monitoring well Ortiz Park-1. The monitoring well annulus will be backfilled with 10/20 silica sand (filter pack) to approximately 2 ft above the top of the monitoring well screen. At least 5 ft of hydrated bentonite clay chips will be placed above the sand pack. Neat cement grout (95% cement and 5% bentonite powder) will be placed above the bentonite seal to approximately 3 ft below the deepest soil vapor port (50 ft bgs). Each soil vapor port will have 2 ft of 10/20 silica sand placed above and below the soil vapor port. Hydrated bentonite clay granules or ⅜-inch bentonite chips will be placed between the sand packs of each soil vapor port/soil vapor screen interval to form an annular seal between soil vapor wells and will extend from the top of the sand pack associated with the shallow soil vapor port to 3 ft bgs. Hydration of the bentonite will be limited to make certain the soil vapor well screen intervals and surrounding filter pack are not saturated with water. The remaining monitoring well annulus (3 ft bgs to surface) and surface pad will be completed with cement. The monitoring well will be completed with an above-ground, sloped, circular concrete pad and a protective metal standpipe with locking cover.

The soil vapor monitoring well will be constructed as follows. Each soil vapor port will be connected to ¼-inch OD (0.21–inch inner diameter [ID]) stainless steel tubing that will be installed to just above the ground surface. The ¼-inch tubing shall be connected to a compression fitting using a ¼-inch female National Pipe Thread (NPT) connector. A ¼-inch male NPT-valve quick-connect coupler shall then be attached to the ¼-inch female NPT connector. A ¼-inch hose barb non-valve elbow quick-connect can then be attached to the quick-connect coupler to open communication to the soil-vapor port at depth.

Task 3d- Monitoring Well Survey

A survey of the new monitoring well will be completed after the monitoring well installation is completed. The monitoring well will be located vertically to the nearest 0.01 foot relative to NAVD 88. The horizontal location of the monitoring wells will be surveyed to the nearest 0.1 foot using NAD 83 and either the State Plane or Latitude-Longitude coordinate system. Morris Surveying of Santa Fe, New Mexico will provide surveying services.

Task 4- Expansion of GWM Program

To expand the routine Site-wide groundwater monitoring program to include one or more groundwater wells associated with the upgradient COSF Paseo de Vista Landfill (Paseo), INTERA will work with Parkhill (INTERA subcontractor) at Paseo and collect split samples during monitoring events or will collect samples from the Paseo monitoring wells independently. INTERA proposes to collect groundwater samples from three (3) upgradient monitoring wells (MW-2, MW-7 and MW-8) (**Figure 3**). Monitoring

well MW-2 is located upgradient of both the Paseo and Frank Ortiz Landfills, and monitoring wells MW-7 and MW-8 are located downgradient of Paseo but upgradient of the Site. The groundwater samples will be analyzed for the same analyses as the Site groundwater samples. Analytes are listed in the revised SAP/QAPP (INTERA, 2019).

Task 5- Single PFAS GWM Event

Task 5 includes completion of a single, Site-wide groundwater monitoring event to determine the presence or absence of PFAS and 1,4-Dioxane. This event will occur when the new groundwater well described in Task 3 has been installed and will include the three Paseo groundwater wells described in Task 4. It is estimated that eight (8) monitoring wells will be sampled to complete this task and will occur during a regularly scheduled semi-annual groundwater monitoring event. Monitoring wells will be sampled following procedures in described in the revised SAP/QAPP (INTERA, 2019) and PFAS and 1, 4-Dioxane will be added to the analytical suite listed in the SAP/QAPP. One field blank and one equipment blank will be collected for quality assurance purposes and analyzed for PFAS.

Prior to the commencement of this GWM event, INTERA will identify what type of dedicated pumps are installed in Paseo monitoring wells and determine if there are PFAS containing components present. Since the pumps are dedicated, the pumps may have to removed and sample collection methods modified if PFAS-containing equipment is suspected.

The State of New Mexico currently does not have a published PFAS Sampling Guidance so INTERA will follow the PFAS sampling procedures recommended by the United States Environmental Protection Agency (USEPA): the Michigan Department of Environmental Quality (MDEQ) Groundwater PFAS Sampling Guidance (MDEQ, 2018) and the Michigan Department of Environment, Great Lakes, and Energy (MDEGLE) General PFAS Sampling Guidance (MDEGLE, 2024).

Task 6- Stormwater Corrective Action Plan

Task 6 involves developing a Corrective Action Plan to address the stormwater issues (e.g., ponding) that impact portions of the Site south and east of the abandoned PVD-1/MW-1 location. The Corrective Action Plan will include a thorough site assessment, strategic design to reduce ponding water and infiltration, implementation of the design, and maintenance, as needed. The Site inspection will be performed to identify areas with standing water and understand the topography and existing drainages. Photographs will be collected concurrently with a scheduled upcoming landfill gas and/or groundwater monitoring event. INTERA recommends completing a topographic survey to create an accurate map of the Site's topography, highlighting the natural slope, depressions, and/or high points. This detailed mapping will allow project engineers to design a drainage system that is tailored to the specific conditions of the Site and helps in the strategic placement of swale, berms, or other drainage features to maximize their effectiveness. It is anticipated that Civil 3D Software will be used for the design process and INTERA's experience working at other landfills with similar issues will aid in designing practical and realistic options.

A Corrective Action Plan summarizing the findings and proposed solutions will be developed and submitted to the COSF.

Task 7- Continuing Soil Gas and Landfill Gas Monitoring

Continuance of the comprehensive Site subsurface soil gas and landfill gas monitoring will occur. No further action is necessary for Task 7.

Task 8- Updating Schedule

Task 8 includes submitting an updated reporting schedule that includes the additional tasks described above.

Cost Estimate

The cost estimate for Tasks 1 through 8 is provided in **Table 1.** Invoices will be sent on a monthly basis following the COSF formal notice to proceed. The COSF will be notified of any conditions requiring a change in the budget estimate as soon as such conditions become evident, should they arise.

References

ASTM International (ASTM), 2017. ASTM Standard D 2488–17, *Standard Practice for Description and Identification of Soils (Visual-Manual Procedure).* West Conshohocken, PA.

INTERA Incorporated (INTERA), 2015a. *Standard Operating Procedure 7, Monitor Well Installation.* February.

———, 2015b. *Standard Operating Procedure 23, Soil Field Screening.* February.

———, 2015c. *Standard Operating Procedure 9, Monitor Well Gauging.* March.

———, 2015d. *Standard Operating Procedure 10, Monitor Well Groundwater Sampling.* October.

———, 2015e. *Standard Operating Procedure 8, Monitor Well Development.* October.

———, 2016a. *Standard Operating Procedure 2, Decontamination.* May.

———, 2016b. *Standard Operating Procedure 13, Soil Sampling.* November.

_____, 2019. Sampling and Analysis and Quality Assurance Project Plan, Waste and Vadose Zone Characterization, Revision 3.0; Former Frank Ortiz Landfill, Santa Fe, Santa Fe County, New Mexico Prepared for New Mexico Environment Department on behalf of City of Santa Fe. November 6.

Michigan Department of Environmental Quality (MDEQ), 2018. Groundwater PFAS Sampling Guidance. October.

Michigan Department of Environment, Great Lakes, and Energy (MEGLE), 2024. General PFAS Sampling Guidance. January.

Sincerely,

INTERA Incorporated

Joseph Tracy, PG
Vice President

Enclosures

Figures 1, 2 and 3

Table 1 – Cost Estimate with Supporting Documentation

Figures

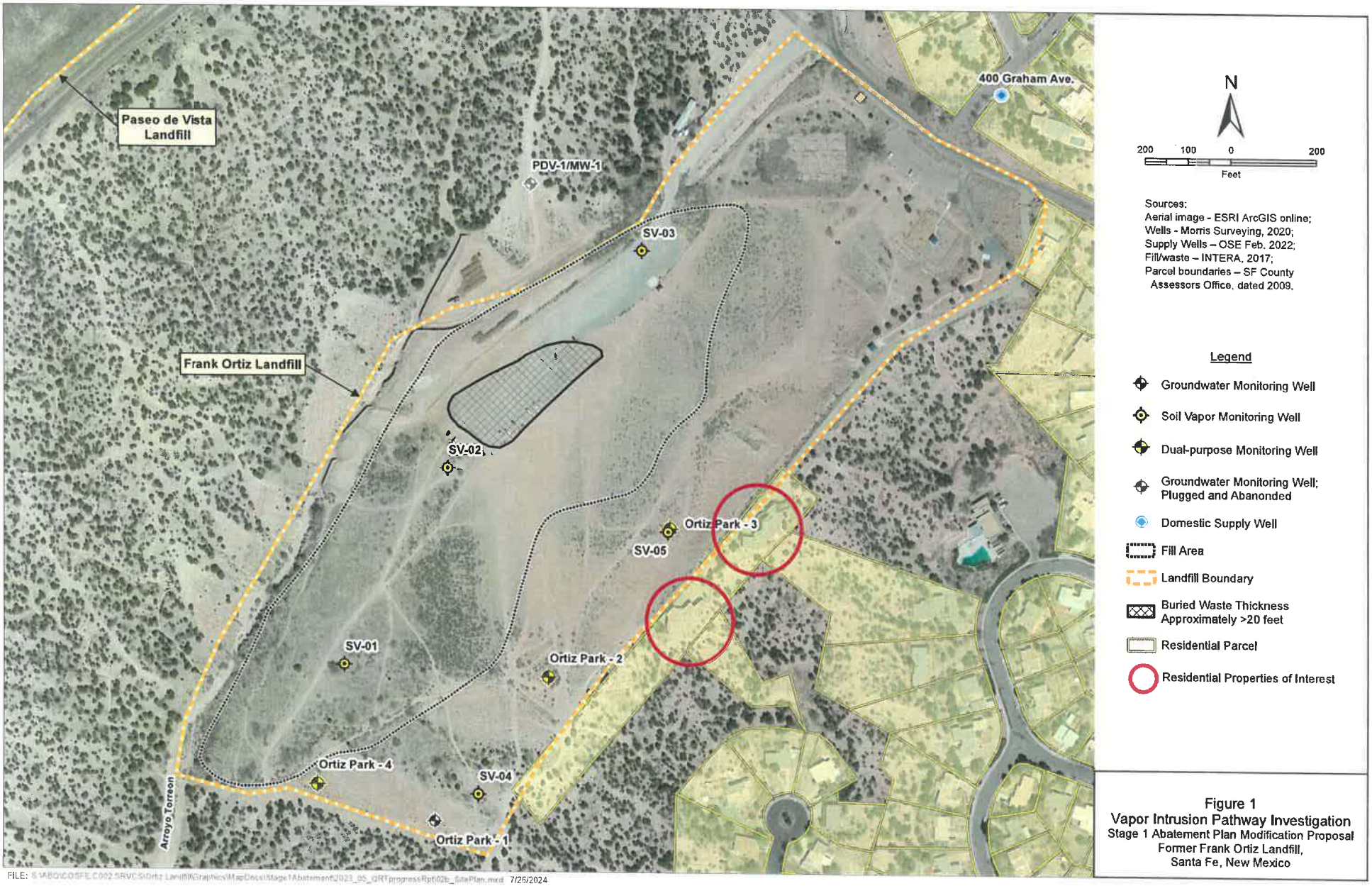

FILE: S:\ABQ\COSFE\C002 SRVC\SI\Ortiz Landfill\Graphics\MapDocs\Stage1Abatement\2023_05_QRTprogressRpt\02b_SitePlan.mxd 7/26/2024

Figure 1
Vapor Intrusion Pathway Investigation
Stage 1 Abatement Plan Modification Proposal
Former Frank Ortiz Landfill,
Santa Fe, New Mexico

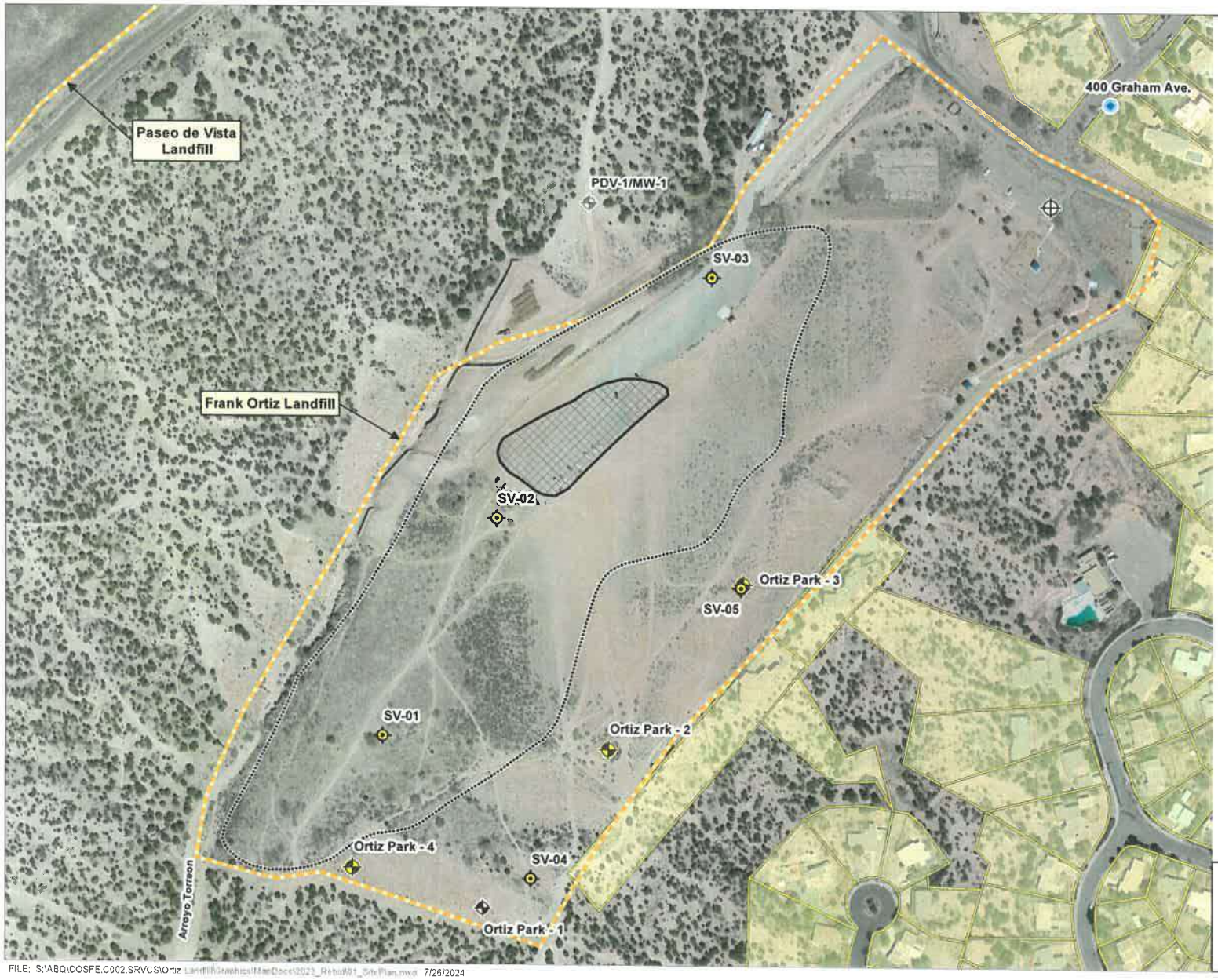

FILE: S:\ABQ\COSFE.C002.SRVCS\Ortiz Landfill\Graphics\MapDocs\2023_Rebuild\01_SitePlan.mxd 7/26/2024

Figure 2
Proposed Dual Purpose Well Location
Stage 1 Abatement Plan Modification Proposal,
Former Frank Ortiz Landfill,
Santa Fe, New Mexico

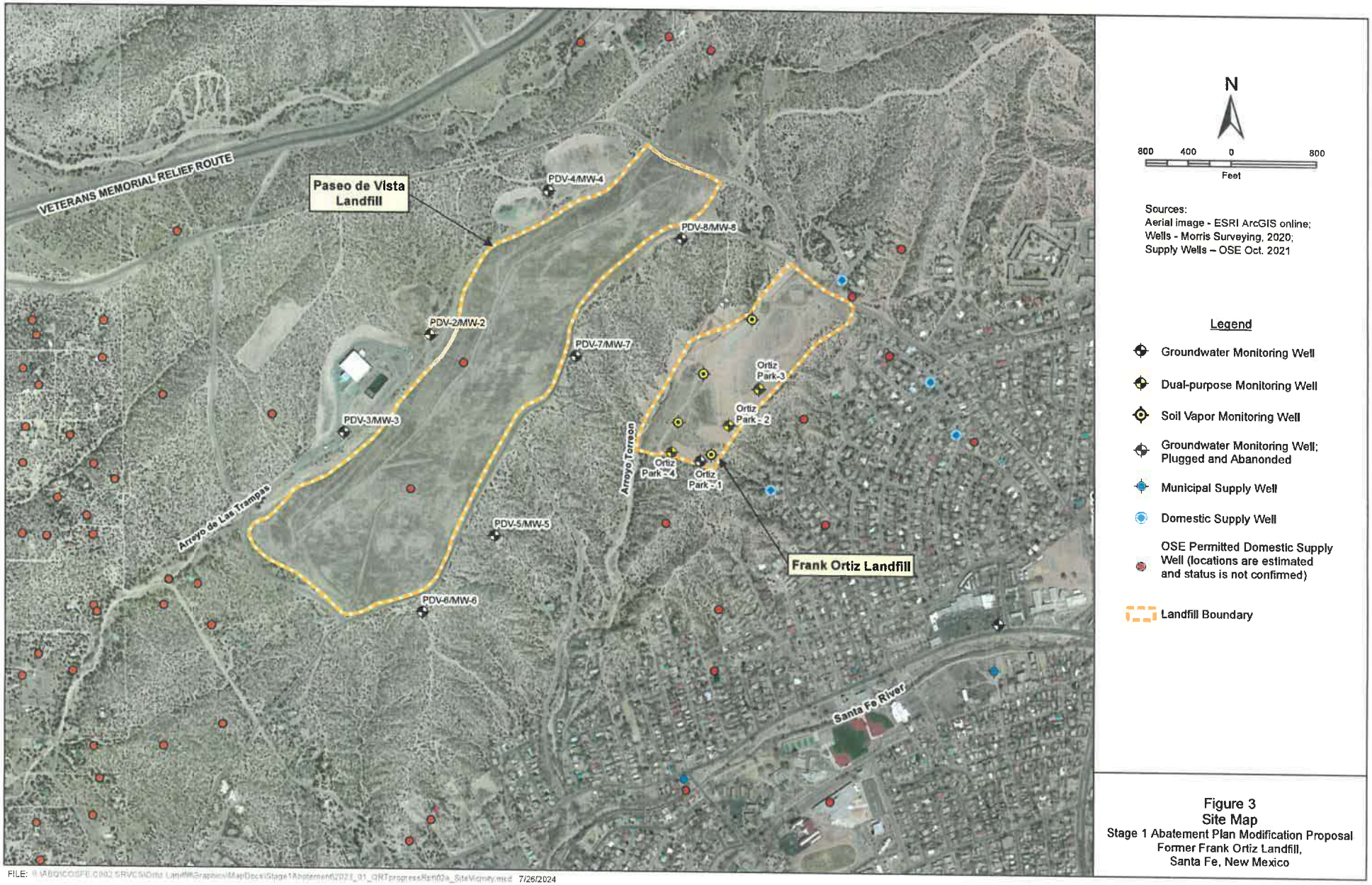

FILE: I:\ABQ\COSFE\0002 SRVCS\Ortiz Landfill\Graphics\MapDocs\Stage1Abatement\2023_01_QRTprogressRpt\02a_SiteVicinity.mxd 7/26/2024

Figure 3
Site Map
Stage 1 Abatement Plan Modification Proposal
Former Frank Ortiz Landfill,
Santa Fe, New Mexico

Table 1

TABLE 1
2024 NMED S1AP Requested Modifications
INTERA Cost Estimate
City of Santa Fe
Former Ortiz Landfill
September 5, 2024

Labor	Rate	Units	Task 1 SEM Completion and Reporting Units	Task 1 Price	Task 2 Vapor Intrusion Pathway Investigation Units	Task 2 Price	Task 3a Project Planning Units	Task 3a Price	Task 3b and 3c Soil Boring Advancement, Soil Sampling, & MW Installation Units	Task 3b and 3c Price	Task 3d Monitoring Well Survey Units	Task 3d Price	Task 4 Expansion of GWM Program with Paseo Wells Units	Task 4 Price	Task 5 Single PFAS/1,4-D GWM Event Units	Task 5 Price	Task 6 Stormwater Corrective Action Plan Units	Task 6 Price	Task 7 Controlling Soil Gas and Landfill Gas Monitoring Units	Task 7 Price	Task 8 Updating Schedule Units	Task 8 Price	Total Tasks 1-8 Units	Total Tasks 1-8 Price
Engineer (JJ)	239.21	Hours		$0.00		$0.00	24	$5,741.04	4	$956.84		$0.00	4	$956.84	4	$956.84	8	$1,913.68		$0.00		$0.00	44	$10,524.24
Project Manager (LP, JS)	150.00	Hours		$0.00		$0.00	6	$900.00	8	$1,200.00		$0.00		$0.00		$0.00	16	$2,400.00		$0.00		$0.00	30	$4,500.00
Technician (AM, PG, MR)	135.77	Hours		$0.00	42	$5,702.34	20	$2,715.40	68	$11,947.76	8	$1,086.16	8	$1,086.16	56	$7,603.12	80	$10,861.60		$0.00	4	$543.08	300	$41,545.62
Labor Subtotal				$0.00		$5,702.34		$9,356.44		$14,104.60		$1,086.16		$2,043.00		$8,559.96		$15,175.28		$0.00		$543.08		$56,570.86
Subcontractors																								
Laboratory																								
VOCs - TO-17	140.00	Each		$0.00		$0.00		$0.00		$0.00		$0.00		$0.00		$0.00		$0.00		$0.00			0	$0.00
VOCs - Soil	130.00	Each		$0.00		$0.00	2	$260.00		$0.00		$0.00		$0.00		$0.00		$0.00		$0.00			2	$260.00
SVOCs - Soil	170.00	Each		$0.00		$0.00	2	$340.00		$0.00		$0.00		$0.00		$0.00		$0.00		$0.00		$0.00	2	$340.00
Metals - Soil	393.00	Each		$0.00		$0.00	2	$786.00		$0.00		$0.00		$0.00		$0.00		$0.00		$0.00		$0.00	2	$786.00
PCBs - Soil	80.00	Each		$0.00		$0.00	2	$160.00		$0.00		$0.00		$0.00		$0.00		$0.00		$0.00		$0.00	2	$160.00
Nitrate/Nitrite, ammonia,total Kjeldhal nitrogen - Soil	110.00	Each		$0.00		$0.00	2	$220.00		$0.00		$0.00		$0.00		$0.00		$0.00		$0.00		$0.00	2	$220.00
VOCs - Water	130.00	Each		$0.00		$0.00		$0.00		$0.00		$0.00	3	$390.00		$0.00		$0.00		$0.00		$0.00	3	$390.00
SVOCs - Water	170.00	Each		$0.00		$0.00		$0.00		$0.00		$0.00	3	$510.00		$0.00		$0.00		$0.00		$0.00	3	$510.00
Metals - Water	383.00	Each		$0.00		$0.00		$0.00		$0.00		$0.00	3	$1,149.00		$0.00		$0.00		$0.00		$0.00	3	$1,149.00
PCBs - Water	80.00	Each		$0.00		$0.00		$0.00		$0.00		$0.00	3	$240.00		$0.00		$0.00		$0.00		$0.00	3	$240.00
Nitrate/Nitrite - Water	35.00	Each		$0.00		$0.00		$0.00		$0.00		$0.00	3	$105.00		$0.00		$0.00		$0.00		$0.00	3	$105.00
PFAS- EPA Method 1633	500.00	Each		$0.00		$0.00		$0.00		$0.00		$0.00		$0.00		$0.00		$0.00		$0.00		$0.00	3	$1,500.00
1-4 Dioxane	170.00	Each		$0.00		$0.00		$0.00		$0.00		$0.00		$0.00	10	$1,900.00		$0.00		$0.00		$0.00	10	$1,900.00
VOCs- IDW Water	130.00	Each		$0.00		$0.00		$0.00		$0.00		$0.00		$0.00	10	$1,700.00		$0.00		$0.00		$0.00		$0.00
RCRA Metals- IDW Water	135.00	Each		$0.00		$0.00		$0.00	1	$135.00		$0.00		$0.00		$0.00		$0.00		$0.00		$0.00		$0.00
VOCs- IDW Soil	130.00	Each		$0.00		$0.00		$0.00	1	$130.00		$0.00		$0.00		$0.00		$0.00		$0.00		$0.00		$0.00
TCLP RCRA Metals- IDW Soil	210.00	Each		$0.00		$0.00		$0.00	1	$210.00		$0.00		$0.00		$0.00		$0.00		$0.00		$0.00		$0.00
MRO/GRO/DRO- IDW Soil	180.00	Each		$0.00		$0.00		$0.00	1	$180.00		$0.00		$0.00		$0.00		$0.00		$0.00		$0.00		$0.00
Paint Filter Test/RCI	100.00	Each		$0.00		$0.00		$0.00	1	$100.00		$0.00		$0.00		$0.00		$0.00		$0.00		$0.00		$0.00
Hall Lab - TCLP Full	390.00	Each		$0.00		$0.00		$0.00		$0.00		$0.00		$0.00		$0.00		$0.00		$0.00		$0.00		$0.00
Hall Lab - TCLP Partial	270.00	Each		$0.00		$0.00		$0.00		$0.00		$0.00		$0.00		$0.00		$0.00		$0.00		$0.00		$0.00
Drilling																								
Yellow Jacket	103,746.00	Each		$0.00		$0.00		$0.00	1	$103,746.00		$0.00		$0.00		$0.00		$0.00		$0.00		$0.00	1	$103,746.00
Other Subcontractors																								
AES (Drum Removal)	6,626.00	Lump Sum		$0.00		$0.00		$0.00	1	$6,626.00		$0.00		$0.00		$0.00		$0.00		$0.00		$0.00	1	$6,626.00
Surveyor (MW and Topo Survey)	4,500.00	Lump Sum		$0.00		$0.00		$0.00		$0.00	1	$4,500.00		$0.00		$0.00	1	$4,500.00		$0.00		$0.00	2	$9,000.00
Pumps	1,000.00	Day		$0.00		$0.00		$0.00		$0.00		$0.00		$0.00		$0.00		$0.00		$0.00		$0.00	0	$0.00
Subcontractor Fee	0.15	%	$0.00	$0.00	$0.00	$0.00	$0.00	$0.00	$111,923.00	$16,953.45	$4,500.00	$675.00	$2,394.00	$359.10	$4,700.00	$1,005.00	$4,500.00	$675.00	$0.00	$0.00	$0.00	$0.00	$128,532.00	$19,279.80
Subcontractor Subtotal				$0.00		$0.00		$0.00		$129,976.45		$5,175.00		$2,753.10		$7,705.00		$5,175.00		$0.00		$0.00		$147,911.80
Direct Expenses																								
Field Expenses (H&S Supplies, tool kit, cellphone, etc.)	100.00	Day		$0.00		$0.00		$0.00	10	$1,000.00		$0.00	1	$100.00	2	$200.00		$0.00		$0.00		$0.00	13	$1,300.00
Drill Kit_tablet	125.00	Week		$0.00		$0.00		$0.00	2	$250.00		$0.00		$0.00		$0.00		$0.00		$0.00		$0.00	2	$250.00
Digital Camera	20.00	Week		$0.00		$0.00		$0.00	2	$40.00		$0.00		$0.00	2	$40.00		$0.00		$0.00		$0.00	4	$80.00
Photoionization Detector (PID)	240.00	Week		$0.00		$0.00		$0.00	2	$480.00		$0.00		$0.00		$0.00		$0.00		$0.00		$0.00	2	$480.00
PFAS Free Bailers, Tips and Twine	181.00	Total		$0.00		$0.00		$0.00		$0.00		$0.00		$0.00	1	$181.00		$0.00		$0.00		$0.00	1	$181.00
YSI Pids 1030	50.00	Day		$0.00		$0.00		$0.00		$0.00		$0.00	1	$50.00	2	$100.00		$0.00		$0.00		$0.00	3	$150.00
PFAS Free Field Filters	20.00	Each		$0.00		$0.00		$0.00		$0.00		$0.00		$0.00		$0.00		$0.00		$0.00		$0.00	0	$0.00
PFAS Free Water Level Meter	47.00	Day		$0.00		$0.00		$0.00		$0.00		$0.00		$0.00	2	$94.00		$0.00		$0.00		$0.00	2	$94.00
Field Truck	95.00	Day		$0.00		$0.00		$0.00		$0.00		$0.00	1	$95.00	2	$190.00		$0.00		$0.00		$0.00	3	$285.00
Field Truck	380.00	Week		$0.00		$0.00		$0.00	4	$1,520.00		$0.00		$0.00		$0.00		$0.00		$0.00		$0.00	4	$1,520.00
Mileage	0.54	Mile		$0.00		$0.00		$0.00	528	$285.12	132	$71.28	264	$142.56	264	$142.56		$0.00		$0.00		$0.00	1188	$641.52
Per Diem	119.00	Day		$0.00		$0.00		$0.00	16	$1,904.00		$0.00	2	$238.00	2	$238.00		$0.00		$0.00		$0.00	20	$2,380.00
Expenses Subtotal				$0.00		$0.00		$0.00		$2,475.12		$71.28		$625.56		$1,195.56		$0.00		$0.00		$0.00		$3,371.52
				$0.00		$5,702.34		$9,356.44		$149,560.17		$6,332.44		$5,421.66		$17,460.52		$20,350.28		$0.00		$543.08		$211,754.18

Subtotal	**$211,754.18**
NM GR Tax (office-Bernalillo County 7.6250%)	**$2,741.35**
NM GR Tax (Field- Santa Fe County 8.1875%)	**$14,637.19**
Project Total	**$229,132.72**

YELLOW JACKET
DRILLING SERVICES
The Southwest's Premier Provider of Innovative Drilling and Well Services

Ms. Lynda Price
INTERA, Inc.
2440 Louisiana Blvd. NE, Suite 700
Albuquerque, NM 87110

Office: 505.832.3244
Cell: 512.492.2072
E-mail: lprice@intera.com

Date: 7/16/24
Bid # (NM)JT24-6690

Subject:
Drilling Services -- Former Frank Ortiz Landfill Project, Santa Fe, NM

Dear Lynda:

The following is in response to INTERA, Inc. ('Client') provided RFP dated 7/9/24 for the above referenced project (no addendums).

Scope of Work:
Utilizing a TSI 150T (truck-mounted Sonic) drill rig, and Pulstar P12 (well service) rig:
Drill, construct, and develop (3) 4" SCH. 80 PVC groundwater monitoring with 1/4" SS soil vapor probes to a depth of 347' (drill 370' total / backfill 23' total / construct 370' total).
Step #1.) 0'-5' or Refusal, borehole clearance (hand auger and/or post hole).
Step #2.) 0'-370', Drill 8X9 and/or 7X8 telescoped (Sonic) borehole (collect continuous bagged sonic core sample).
Step #3.) 347'-370', Backfill borehole (TR30 bentonite pellets from 353'-370' / gravel pack from 347'-353').
Step #4.) 0'-347', Construct 4" well (1-30' screened interval), with 1/4" soil vapor probes attached (43'/34'/23').
Step #5.) Install 12" flush grade well box, with 6" x 36" concrete pad.
Step #6.) Install 8" field grade well box, with 6" x 36" concrete pad (no protective bollards required).
Step #7.) Develop well (surge, bail, and/or pump).

Proposed Drilling Equipment Package:
Tsi 150T truck-mounted drill rig, staffed with 3-man crew
Box truck
Equipment trailer
All-terrain forklift & tilt-hopper
4X4 Crew truck
Flatbed trailer
2K Water truck

Proposed Well Service Equipment Package:
Pulstar P12 rig, staffed with 2-man crew
Support trailer

Performance Timelines:
Drilling activities; as outlined: +/- (7) shifts
Well Services; as outlined: +/- (1) shift

Availability:
TBD at time of notification of intent to contract.
**Note: As of the time of this writing 'YJD' has the necessary resources available to mobilize and begin field activities as early as the week of 7/28/24.*

Project Cost Summary:
See attached.

'YJD' Proposal Assumptions & Conditions:
1.) 'Client' to provide all Local, State, Federal project specific permits.
2.) All drilling locations are to be clear of any and all overhead & subsurface utilities.
3.) All drilling locations are accessible by way of 2-wheel drive truck mounted drilling & related equipment.
4.) All drill cuttings generated will be placed in 'Client' provided roll-off bins, located within 100' of the drilling locations.
5.) If required; profiling and off-site disposal of all drill cuttings will be the responsibility of 'Client'.
6.) All fluids generated will be placed in 'Client' provided storage tanks, located within 100' of the drilling locations.
7.) If required; profiling and off-site disposal of all fluids generated will be the responsibility of 'Client'.
8.) Schedule/Pricing is based on a single rig operation; utilizing (1) crew, working 11/hour shifts (on-site), working a 10/on (days) - 4/off (days) schedule (including mob/demob/travel time); or as 'YJD' deems necessary to complete what it views as critical phases of the project.
9.) Rig standby due to unreadiness of the working locations or 'Client' delays will be billed at the following hourly rates; 150T ($765), P12 ($345).
10.) Project is not subject to Union, Davis Bacon, Prevailing, TERO labor rates.
11.) If the project encounters difficulties beyond our control or if the scope of work is altered, 'YJD' reserves the right to renegotiate the price.
12.) Materials; due to the market price fluctuations of steel and petroleum based products; 'YJD' cannot guarantee the price of the materials required to complete the project beyond a period of 10-working days from the date in which the pricing is provided. In the event that a material price increase occurs; 'YJD' reserves the right to pass on the difference in the form of a revised proposal, or by using the change order process.
All well casing, screen, and gravel pack materials are non-restockable; and will be billed to 'Client' at the conclusion of the project regardless of use. The quantities of non-restockable materials will be discussed with 'Client' and agreed upon prior to placing order.
13.) EIA Fuel Use Market Adjustment; due to the current price fluctuations of petroleum products 'YJD' has based the provided pricing on the most recent available weekly retail gasoline and diesel prices as reported by the Energy Information Administration ('EIA' - Official Energy Statistics from the US Government). 'YJD' has used the reported area average of ($4.03-Gallon) to calculate it's bid; in the event that the cost of fuel increases prior to the start and/or during the course of the project 'YJD' will invoice for the additional costs on a per-shift basis. The per-shift charge will be based on the difference of the fuel cost per-gallon at the time of bid; plus 15% mark-up verses the actual cost per-gallon during the time period in which the project is completed.
*NOTE: The multiplier to calculate the fuel use market adjustment on a per-shift basis is based on the equipment package utilized; for this bid the per-shift multiplier is based on the fixed amounts as follows; 150T (75-gallons), P12 (40-gallons).
14.) Provided pricing does not include any applicable State and/or Local Taxes. Sales Tax will be charged unless a Sales Tax Exemption Certificate is provided.
15.) This proposal is valid for (60) days from the date provided.

For new Clients payment terms will be established by 'YJD' based on 'Client' financial history. 'YJD' will utilize information available through Dun & Bradstreet ('D&B') to make the determination.

For established Clients services rendered will be billed promptly upon completion of work. Terms are net **thirty (30) days** unless otherwise agreed in writing in advance. A delinquency charge of 1.5% per month will apply to all past due invoices, unless a lower rate is required by law. Client agrees to pay all court costs and attorneys fees, should court proceedings be initiated or attorneys be retained to collect past due amounts.

We at Yellow Jacket Drilling Services thank you for the opportunity to provide this proposal. If you have any questions, or if we can be of any further assistance please do not hesitate to contact us at (888) 495-3745. We look forward to hearing from you soon.

Sincerely,
Yellow Jacket Drilling Services, LLC

John Truax

John Truax
Executive Vice President

Item	Quantity	Unit	Cost	Price
Project Cost Summary				
150T Drilling Equipment: Mob/Demob	1	LS	$ 26,115.00	$ 26,115.00
150T Equipment Inspections, Site Specific Training, Meetings..	0	HR	$ 765.00	$ -
Borehole Clearance: Hand Auger Excavate to 5' or Refusal	1	HR	$ 765.00	$ 765.00
Drill: 8X9 and/or 7X8 Sonic Borehole	370	LF	$ 67.00	$ 24,790.00
Well Construction and/or Backfill: Labor Only	370	LF	$ 50.00	$ 18,500.00
Well Material: Trucking	1	LS	$ 3,485.00	$ 3,485.00
Well Material: 4" SCH. 80 PVC Screen	30	LF	$ 25.00	$ 750.00
Well Material: 4" SCH. 80 PVC Casing	317	LF	$ 23.00	$ 7,291.00
Well Material; SS Vapor Probe & Fittings	3	EA	$ 500.00	$ 1,500.00
Well Material; 1/4" SS Tubing (100' Roll)	90	LF	$ 14.50	$ 1,305.00
Well Material: Annular Gravel Pack, Seal, Grout..	370	LF	$ 13.00	$ 4,810.00
Well Box: 8" Field Grade, with 6" x 36" Concrete Pad	1	EA	$ 1,355.00	$ 1,355.00
Protective Bollard: 4" Steel	0	EA	$ 500.00	$ -
150T Rig Move-on, Set-up, Take-down, Clean-up..	5	HR	$ 765.00	$ 3,825.00
150T Rig Standby ('Client' Directed Work Stoppage..)	0	HR	$ 765.00	$ -
Visqueen Plastic Roll (Drill Pad Protection)	1	EA	$ 160.00	$ 160.00
P12 Well Service Equipment: Mob/Demob	1	LS	$ 6,865.00	$ 6,865.00
P12 Well Service Equipment Inspections, On-Site Training, Meetings..	0	HR	$ 345.00	$ -
Well Service: Development (All Time Associated)	6	HR	$ 345.00	$ 2,070.00
P12 Rig Standby ('Client' Directed Work Stoppage..)	0	HR	$ 345.00	$ -
Visqueen Plastic Roll (Drill Pad Protection)	1	EA	$ 160.00	$ 160.00
				$ -
Site Protection: Security Guard (Working Days: 13-Hours)	0	DY	Cost + 15%	$ -
Site Protection: Security Guard (Working Days: 24-Hours)	0	DY	Cost + 15%	$ -
Porta-Potty: Transportation, Rental, Service.. (1-Month Minium)	0	MO	Cost + 15%	$ -
Trash Service: Transportation, Rental, Service.. (1-Month Minium)	0	MO	Cost + 15%	$ -
Estimated Project Total				**$ 103,746.00**

STATEMENT OF QUALIFICATIONS

Yellow Jacket Drilling
1-888-4YJDRIL (1-888-495-3745)
yjdrilling.com

YELLOW JACKET
DRILLING SERVICES

Yellow Jacket Drilling Services (YJD) has built its reputation throughout the western United States as being a premier provider of high quality, safe and cost effective drilling services. YJD's corporate office is located in Phoenix, Arizona. The projects that we service are supported from offices located in Arizona, California, Colorado, and Oregon.

As a qualified small business enterprise; we are able to offer several innovative techniques and solutions for your drilling needs many of which were previously only available from our larger business competitors.

YJD specializes in, but is not limited to, providing drilling services to the Environmental, Geotechnical, Mining, Water Supply and Energy market sectors. Some of our available drilling methodologies include; Direct Push, Hollow-Stem Auger, Air Rotary, Mud Rotary, Sonic, Dual Wall Reverse Circulation (RC), Air Rotary Casing Hammer (ARCH), Under-Reaming Casing Advancement (Tubex/Stratex), Flooded Reverse, Conventional and Wireline Coring.

Our diverse fleet of equipment includes multiple Hollow-Stem Auger, Sonic and Rotary drill rigs. With our fleet we have the capability to do everything from drilling in excess of 200' with hollow stem auger, to drilling depths beyond 2,000' using rotary techniques. Some of our specialized rigs allow us the ability to drill in difficult access settings such as under a service station canopy, in a building, on a barge, or on a remote hillside. Our fleet is maintained through a preventative maintenance program that enables us to operate at peak performance at all times.

Safety is our number one priority and all YJD employees maintain numerous industry certifications including; 40-hour OSHA, MSHA, Smith Defensive Driving, as well as certification and participation in multiple safety programs such as API and LPS. Annual refreshers and medical monitoring are mandatory, as well as daily tailgate and all hands monthly safety meetings. We believe that our EMR rating is reflective of our efforts (2022 = 0.65, 2021 = 0.68, 2020 = 0.63)

YJD is committed to maintaining the highest quality workmanship, reliability, professionalism, and efficiency in the industry. Our personnel is extremely knowledgeable and have years of experience. We understand our clients' needs, and want every customer to be completely satisfied with our work. Each and every employee at YJD is willing to go the extra step to ensure we meet that goal. With such a dedicated group, you can be certain we will get the job done properly, safely, cost-effectively, and on time.

AN ATTITUDE OF EXCELLENCE

It plays a role in everything we do - whether it concerns safety, our customers, equipment, or drill methods.

WE NEVER PROMISE MORE THAN WE CAN DELIVER

By placing a strong emphasis on safety, maintenance, high quality equipment, and proper scheduling practices, we provide maximum efficiency and flexibility to meet your ever-changing project needs.

WE VALUE LASTING PARTNERSHIPS WITH OUR CUSTOMERS

Maintaining an honest dialogue and keeping close personal contact with all involved is our way of ensuring your needs will be met. You benefit from high performance, a hassle-free job, and above standard results.

OUR GOAL IS YOUR COMPLETE SATISFACTION

Yellow Jacket Drilling has become known throughout the western United States for providing high quality, safe, and cost effective drilling services.

YELLOW JACKET DRILLING SERVICES

As one of the most respected names in the industry, Yellow Jacket Drilling stands to become one of your most trusted service providers.

Yellow Jacket Drilling Services, LLC

Arizona	California	Colorado	Oregon
(602) 453-3252	(909) 989-8563	(303) 243-5011	(503) 285-2461

TSi 150T

Yellow Jacket Drilling
1-888-4YDRIL (1-888-495-3745)
yjdrilling.com

The TSi 150T manufactured by Terra Sonic International an industry leader in the design, and manufacturing of sonic drill rigs, tooling and support equipment is without question the MOST POWERFUL sonic drill rig available in the industry.

Every component on this state of the art rig has been specifically designed to take the force that the powerful sonic oscillator can produce, and then some. No other sonic rig is going to get the job done safer, faster, or more efficiently than the TSi 150T can.

The TSi 150T sonic oscillator utilizes up to 150 HP to generate powerful sonic energy in the drill string to an impressive rated depth of 700' with 6" casing; and is capable of advancing casing sizes up to 12" in diameter.

The angle or vertical capable TSi 150T is not only extremely powerful; this versatile machine is also equipped to collect split-spoon and/or SPT samples using a 140 lb. automatic sampling hammer, and if bedrock is present can easily be adapted to rotary drill, wire-line core, or conventional core using various sizes and methods.

rigspecs

Sonic Head
Oscillator Frequency – 0 to 150 Hz
Oscillator Force – 50,000 lbs.
Max Torque – 4,677 ft-lbs.
Rotational Speed – 0 to 80 rpm

Engine
John Deere tier 4 turbo charged diesel engine rated at 255 horsepower @ 2000 RPM.

Mast
Head Tilt – 87-degrees
Head Travel – 24.5'
Head Travel Speed – 0 to 180 fpm
Overall Length – 32'
Drilling Angle – Vertical to 45-degrees off vertical
Upper Jib Hoist – 2,000 lb. capacity, 150 fpm
Lower Jib Hoist – 2,000 lb. capacity, 150 fpm
Wiggle – 6" lateral swing, 6" fore/aft
Feed System – Hydraulic cylinder operated feed frame
Rod Rack – 800' of vertical mast rod storage

Breakout
Wrench – Dual cylinders on both top and bottom wrench
Wrench Size Range – 3" to 12"
Wrench Travel – 19-degree Swing
Wrench Clamp Force – Adjustable pressure preset at 34,500 lbs.

Truck
Peterbilt Model 365 (6x4) equipped with a Cummins diesel engine rated at 425 horsepower @ 1800 RPM. 20,000-lb. rated front axle and a tandem rear axle with a 40,000-lb. rating.







Average Dimensions & Weight

	Folded	*Unfolded*
Width	8' - 5"	10' - 11 ¼"
Length	33' 2 ½"	37'
Height	12' - 9 1/8"	26' - 6"

Weight 42,000 lbs. Ground Clearance 14"

Sonic Tooling Diameters

Rod • Casing Core Barrel

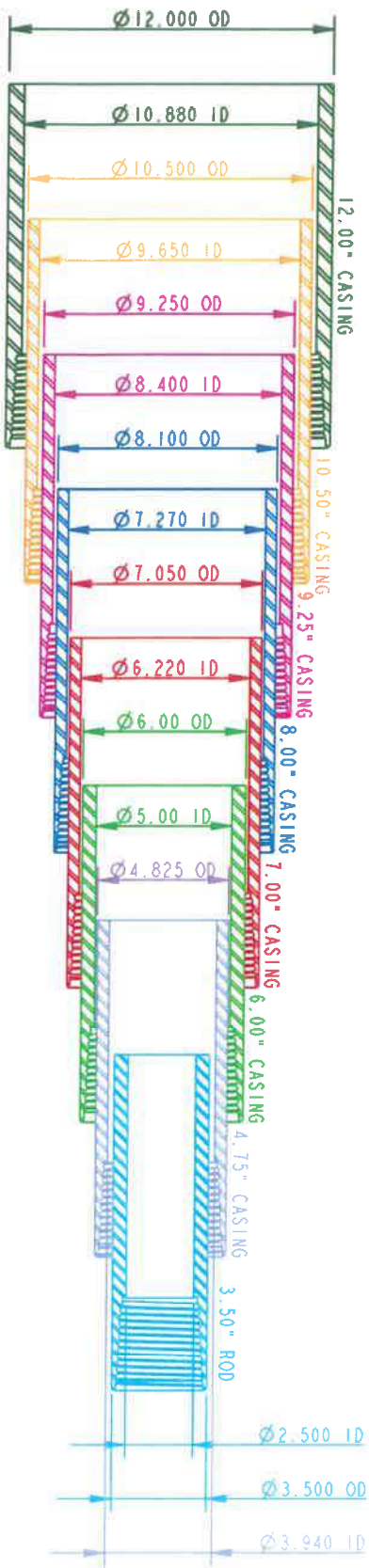

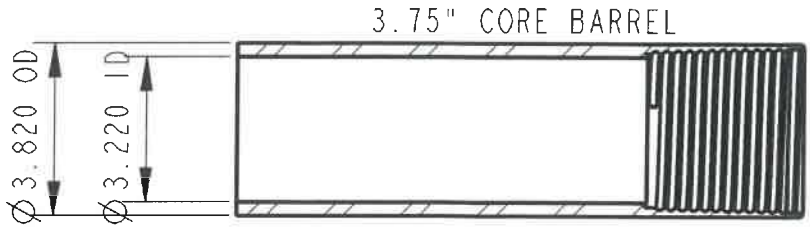

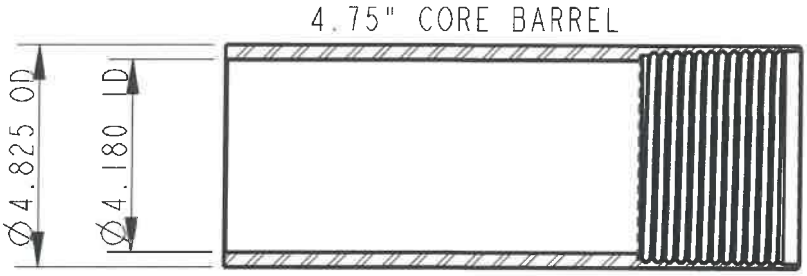

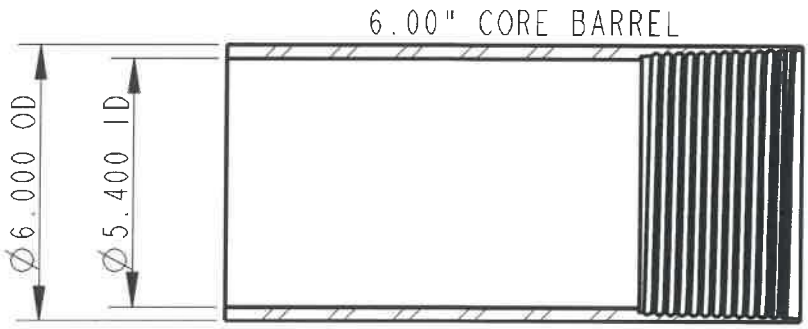

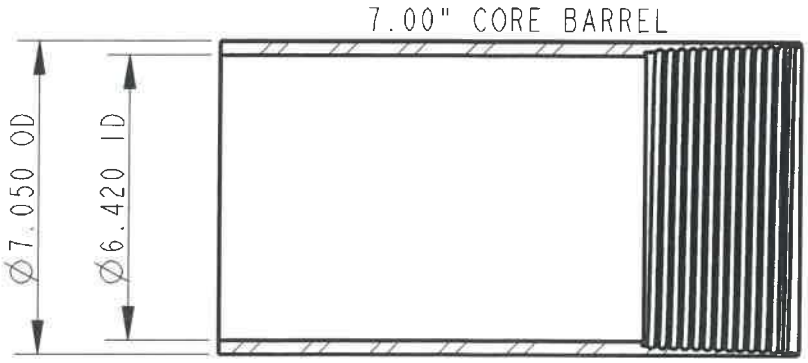

Dimensions are in inches.
Diagrams courtesy of Terra Sonic International.

24-0461
Item#
Munis Contract #3204578
Original Contract Item# 23-0578
SWPA/GSA/Coop/RFP/ITB #: SHR000022790

CITY OF SANTA FE
AMENDMENT No.1 TO
PROFESSIONAL SERVICES CONTRACT
ITEM#23-0578

This AMENDMENT No.1. (the "Amendment") amends the CITY OF SANTA FE PROFESSIONAL SERVICES CONTRACT, dated September 25, 2023, (the "Contract"), between the City of Santa Fe (the "City") and INTERA Incorporated. (the "Contractor"). The date of this Amendment shall be the date when it is executed by the City and the Contractor whichever occurs last.

RECITALS:

A. Under the terms of the Contract, Contractor has agreed to provide the Ground Water Monitoring, Vapor Monitoring, Other Environmental and Engineering Services and Reporting for two City of Santa Fe closed landfills.

B. Pursuant to Article 14 of the Contract, and for good and valuable consideration, the receipt and sufficiency of which are acknowledged by the parties, the City and the Contractor agree as follows:

3. COMPENSATION.

Article 3, paragraph A of the Contract is amended to increase the amount of compensation by a total of one hundred fifty thousand dollars ($150,000) so that Article 3, paragraph A reads in its entirety as follows:

A. The City shall pay the Contractor in full payment for services satisfactorily performed as described in Exhibit "A" of the original contract. The total amount payable to the contractor under this Agreement, including gross receipts tax and expenses, shall not exceed two hundred ninety-nine thousand, four hundred eighty-nine dollars and

one cent ($299,489.01). This amount is a maximum and not a guarantee that the work assigned to be performed by the Contractor under this Agreement shall equal the amount stated herein. The parties do not intend for the Contractor to continue to provide services without compensation when the total compensation amount is reached. Contractor is responsible for notifying the city when the services provided under this Agreement reach the total compensation amount. In no event will the Contractor be paid for services provided in excess of the total compensation amount without this Agreement being amended in writing prior to those services in excess of the total compensation amount being provided.

4. TERM:

Article 4 of the Contract is hereby deleted in its entirety and substitute the following Article 4 in its place:

THIS AGREEMENT SHALL NOT BECOME EFFECTIVE UNTIL APPROVED BY THE CITY. This Agreement shall terminate on June 30, 2025, unless terminated pursuant to paragraph 5 (Termination), or paragraph 6 (Appropriations). The City reserves the right to renew the contract on an annual basis by mutual Agreement not to exceed a four year in accordance with NMSA 1978, §§13-1-150 through 152.

CONTRACT IN FULL FORCE.

Except as specifically provided in this Amendment, the Contract remains and shall remain in full force and effect, in accordance with its terms.

IN WITNESS WHEREOF, the parties have executed this Amendment No.1 to the Contract as of the dates set forth below.

CITY OF SANTA FE:

Alan Webber (Jul 22, 2024 11:09 MDT)

ALAN WEBBER, MAYOR

DATE: Jul 22, 2024

CONTRACTOR:
INTERA Incorporated

Joseph Tracy

JOE TRACY, VICE PRESIDENT

DATE: May 29, 2024
CRS# 74-3010638

Registration #227829

ATTEST:

GERALYN CARDENAS, INTERIM CITY CLERK
GB MTG 07/19/2024 XIV

CITY ATTORNEY'S OFFICE:

Marcos Martinez
SENIOR ASSISTANT CITY ATTORNEY

APPROVED FOR FINANCES:

Emily K. Oster

EMILY OSTER, FINANCE DIRECTOR

Signature: Marcos Martinez
Marcos Martinez (Jun 3, 2024 08:01 MDT)

Email: mdmartinez@santafenm.gov

INTERA _Amendment 1_plate_V4_12.20_.2023 _ (1) 5-9-2024-Final CAO

Final Audit Report 2024-06-03

Created:	2024-05-29
By:	Amy Cawthon (amcawthon@santafenm.gov)
Status:	Signed
Transaction ID:	CBJCHBCAABAAqLEBooZEYbPcfKmEcFcXxOKKkswBBAbn

"INTERA _Amendment 1_plate_V4_12.20_.2023_ (1) 5-9-2024-Final CAO" History

Document created by Amy Cawthon (amcawthon@santafenm.gov)
2024-05-29 - 11:09:37 PM GMT- IP address: 63.232.20.2

Document emailed to Joseph Tracy (jtracy@intera.com) for signature
2024-05-29 - 11:10:19 PM GMT

Email viewed by Joseph Tracy (jtracy@intera.com)
2024-05-29 - 11:22:45 PM GMT- IP address: 74.51.214.122

Document e-signed by Joseph Tracy (jtracy@intera.com)
Signature Date: 2024-05-29 - 11:34:21 PM GMT - Time Source: server- IP address: 74.51.214.122

Document emailed to Marcos Martinez (mdmartinez@santafenm.gov) for signature
2024-05-29 - 11:34:22 PM GMT

Email viewed by Marcos Martinez (mdmartinez@santafenm.gov)
2024-05-29 - 11:35:29 PM GMT- IP address: 104.47.65.254

Email viewed by Marcos Martinez (mdmartinez@santafenm.gov)
2024-06-03 - 2:01:14 PM GMT- IP address: 76.127.57.172

Document e-signed by Marcos Martinez (mdmartinez@santafenm.gov)
Signature Date: 2024-06-03 - 2:01:27 PM GMT - Time Source: server- IP address: 76.127.57.172

Agreement completed.
2024-06-03 - 2:01:27 PM GMT

Powered by
Adobe
Acrobat Sign

Item# 23-0578
Munis Contract# ~~3209217~~ 3204358
Albuquerque Contract SHR000022790

CITY OF SANTA FE

PROFESSIONAL SERVICES AGREEMENT

THIS AGREEMENT is made and entered into by and between the City of Santa Fe, New Mexico, hereinafter referred to as the "City," and **INTERA, Incorporated**, hereinafter referred to as the "Contractor," and is effective as of the date set forth below upon which it is executed by the Parties.

RECITALS

WHEREAS, the Chief Procurement Officer of the City has made the determination that this Agreement is in accordance with the provisions of the New Mexico Procurement Code (NMSA 1978, 13-1-28 et seq.) pursuant to NMSA 1978, § 13-1-129; and

WHEREAS, the Contractor is one of such requisite and qualifications and is willing to engage with the City for professional services, in accordance with the terms and conditions hereinafter set out, and the Contractor understanding and consenting to the foregoing is willing to render such professional services as outlined in the Agreement; and

NOW, THEREFORE, the parties hereby agree as follows:

1. Scope of Work.
The Contractor shall provide the following services for the City and as described in Exhibit "A" attached hereto:

Four Quarters of New Mexico Environment Department Ground Water Quality Bureau, Stage 1 Abatement Plan Monitoring and Reporting for the Former Frank Ortiz Landfill, and Four Quarters of New Mexico Environment Department Solid Waste Bureau Monitoring and Reporting for the Paseo de Vista Landfill, located within Santa Fe County, New Mexico.

Site work and report deliverables to be completed in accordance with amended work plan approved by the New Mexico Environment Department, Ground Water Quality Bureau as detailed in the site Sampling and Analysis and Quality Assurance Project Plan for Waste and Vadose Zone Characterization. (Revision 3.0 dated November 2, 2019)

Stage 1 Abatement Plan Modification Surface Emissions Monitoring, Activities which were required by regulators in a notification dated September 23, 2021. The proposed schedule for Site Work and Report Deliverables including development is detailed below.

A. 2023 3rd Quarter, Field Task
   I. Surface Emissions Monitoring Event
   II. Landfill Gas Monitoring Event

B. 2023 3rd Quarter, Deliverable
   I. Provide Letter Report with Figures and Tables summarizing Surface Emissions Monitoring, and Landfill Gas Monitoring Event results.

C. 2023 4th Quarter Field Task
   I. Surface Emissions Monitoring Event
   II. Landfill Gas Monitoring Event
   III. Groundwater Monitoring Event
   IV. Soil Vapor Collection Event

D. 2023 4th Quarter Deliverable
   I. Report with Figures and Tables summarizing all field task results and evaluating Site Conditions.

E. 2024 1st Quarter Field Tasks
   I. Surface Emissions Monitoring Event
   II. Landfill Gas Monitoring Event

F. 2024 1st Quarter Deliverables
   I. Provide Letter Report with Figures and Tables summarizing Surface Emissions Monitoring, and Landfill Gas Monitoring Event results.

G. 2024 2nd Quarter Field Tasks
   I. Surface Emissions Monitoring Event
   II. Landfill Gas Monitoring Event
   III. Soil Vapor Collection Event
   IV. Final Benchmark Settlement Report

H. 2024 2nd Quarter Deliverables
   I. Report with Figures and Tables summarizing all field task results and evaluation Site Conditions

2. **Standard of Performance: Licenses.**

A. The Contractor represents that Contractor possesses the personnel, experience and knowledge necessary to perform the services described under this Agreement. The Contractor does hereby accept its designation as professional service, rendering services related to required regulatory deliverables of amended regulatory work plan provided by New Mexico Environment Department (NMED) Solid Waste Bureau, and NMED Ground Water Quality Bureau for the City, as set forth in this Agreement.

B. The Contractor agrees to obtain and maintain throughout the term of this

Agreement, all applicable professional and business licenses required by law, for itself, its employees, agents, representatives, and subcontractors.

3. Compensation.

A. The City shall pay to the Contractor in full payment for services satisfactorily performed at the rate as described in Exhibit "A" attached and incorporated herein. Listed pricing will be utilized based on hourly rate listed in the item description and unit, within unit of measure as EA depending on the service as indicated in Exhibit "A". The total amount payable to the Contractor under this Agreement, including gross receipts tax and expenses, shall not exceed **one hundred forty-nine thousand four hundred eighty-nine dollars and one cent ($149,489.01).** This amount is a maximum and not a guarantee that the work assigned to be performed by Contractor under this Agreement shall equal the amount stated herein. The parties do not intend for the Contractor to continue to provide services without compensation when the total compensation amount is reached. Contractor is responsible for notifying the city when the services provided under this Agreement reach the total compensation amount. In no event will the Contractor be paid for services provided in excess of the total compensation amount without this Agreement being amended in writing prior to those services in excess of the total compensation amount being provided.

B. Payment is subject to availability of funds pursuant to the Appropriations Paragraph set forth below and to any negotiations between the parties from year to year pursuant to Paragraph 1, Scope of Work, and to approval by the City. All invoices MUST BE received by the City no later than thirty 30) days after the termination of the Fiscal Year in which the services were delivered. Invoices received after such date WILL NOT BE PAID.

C. Contractor must submit a detailed statement accounting for all services performed and expenses incurred. If the City finds that the services are not acceptable, within thirty days after the date of receipt of written notice from the Contractor that payment is requested, it shall provide the Contractor a letter of exception explaining the defect or objection to the services, and outlining steps the Contractor may take to provide remedial action. Upon certification by the City that the services have been received and accepted, payment shall be tendered to the Contractor within thirty days after the date of acceptance. If payment is made by mail, the payment shall be deemed tendered on the date it is postmarked. However, the City shall not incur late charges, interest, or penalties for failure to make payment within the time specified herein.

4. Term.

THIS AGREEMENT SHALL NOT BECOME EFFECTIVE UNTIL APPROVED BY THE CITY. This Agreement shall terminate on June 30, 2024, unless terminated pursuant to paragraph 5 (Termination), or paragraph 6 (Appropriations). In accordance with Section 13-1-150 NMSA 1978, no contract term for a professional services contract, including extensions and renewals, shall exceed four years, except as set forth in Section 13-1-150 NMSA 1978.

5. Termination.

A. Termination. This Agreement may be terminated by the City upon written notice delivered to the other party at least thirty (30) days prior to the intended date of termination. Except as otherwise allowed or provided under this Agreement, the City's sole liability upon such termination shall be to pay for acceptable work performed prior to the Contractor's receipt

of the notice of termination, if the City is the terminating party, or the Contractor's sending of the notice of termination, if the Contractor is the terminating party; provided, however, that a notice of termination shall not nullify or otherwise affect either party's liability for pre-termination defaults under or breaches of this Agreement. The Contractor shall submit an invoice for such work within thirty (30) days of receiving or sending the notice of termination. Notwithstanding the foregoing, this Agreement may be terminated immediately upon written notice to the Contractor if the Contractor becomes unable to perform the services contracted for, as determined by the City or if, during the term of this Agreement, the Contractor or any of its officers, employees or agents is indicted for fraud, embezzlement or other crime due to misuse of City funds or due to the Appropriations paragraph herein. *THIS PROVISION IS NOT EXCLUSIVE AND DOES NOT WAIVE THE City's OTHER LEGAL RIGHTS AND REMEDIES CAUSED BY THE CONTRACTOR'S DEFAULT/BREACH OF THIS AGREEMENT.*

B. Termination Management. Immediately upon receipt by either the City or the Contractor of notice of termination of this Agreement, the Contractor shall: 1) not incur any further obligations for salaries, services or any other expenditure of funds under this Agreement without written approval of the City; 2) comply with all directives issued by the City in the notice of termination as to the performance of work under this Agreement; and 3) take such action as the City shall direct for the protection, preservation, retention or transfer of all property titled to the City and records generated under this Agreement. Any non-expendable personal property or equipment provided to or purchased by the Contractor with contract funds shall become property of the City upon termination and shall be submitted to the City as soon as practicable.

6. **Appropriations.**

The terms of this Agreement are contingent upon sufficient appropriations and authorization being made by the Governing Body for the performance of this Agreement. If sufficient appropriations and authorization are not made by the Governing Body, this Agreement shall terminate immediately upon written notice being given by the City to the Contractor. The City's decision as to whether sufficient appropriations are available shall be accepted by the Contractor and shall be final. If the City proposes an amendment to the Agreement to unilaterally reduce funding, the Contractor shall have the option to terminate the Agreement or to agree to the reduced funding, within thirty (30) days of receipt of the proposed amendment.

7. **Status of Contractor.**

The Contractor and its agents and employees are independent contractors performing professional services for the City and are not employees of the City. The Contractor and its agents and employees shall not accrue leave, retirement, insurance, bonding, use of City vehicles, or any other benefits afforded to employees of the City as a result of this Agreement. The Contractor acknowledges that all sums received hereunder are reportable by the Contractor for tax purposes, including without limitation, self-employment and business income tax. The Contractor agrees not to purport to bind the City unless the Contractor has express written authority to do so, and then only within the strict limits of that authority.

8. **Assignment.**

The Contractor shall not assign or transfer any interest in this Agreement or assign any claims for money due or to become due under this Agreement without the prior written approval

of the City.

9. **Subcontracting.**

The Contractor shall not subcontract any portion of the services to be performed under this Agreement without the prior written approval of the City. No such subcontract shall relieve the primary Contractor from its obligations and liabilities under this Agreement, nor shall any subcontract obligate direct payment from the City.

10. **Release.**

Final payment of the amounts due under this Agreement shall operate as a release of the City, its officers and employees from all liabilities, claims and obligations whatsoever arising from or under this Agreement.

11. **Confidentiality.**

Any confidential information provided to or developed by the Contractor in the performance of this Agreement shall be kept confidential and shall not be made available to any individual or organization by the Contractor without the prior written approval of the City.

12. **Product of Service – Copyright.**

All materials developed or acquired by the Contractor under this Agreement shall become the property of the City and shall be delivered to the City no later than the termination date of this Agreement. Nothing developed or produced, in whole or in part, by the Contractor under this Agreement shall be the subject of an application for copyright or other claim of ownership by or on behalf of the Contractor.

13. **Conflict of Interest; Governmental Conduct Act.**

A. The Contractor represents and warrants that it presently has no interest and, during the term of this Agreement, shall not acquire any interest, direct or indirect, which would conflict in any manner or degree with the performance or services required under the Agreement.

B. The Contractor further represents and warrants that it has complied with, and, during the term of this Agreement, will continue to comply with, and that this Agreement complies with all applicable provisions of the Governmental Conduct Act, Chapter 10, Article 16 NMSA 1978.

C. Contractor's representations and warranties in Paragraphs A and B of this Article 12 are material representations of fact upon which the City relied when this Agreement was entered into by the parties. Contractor shall provide immediate written notice to the City if, at any time during the term of this Agreement, Contractor learns that Contractor's representations and warranties in Paragraphs A and B of this Article 12 were erroneous on the effective date of this Agreement or have become erroneous by reason of new or changed circumstances. If it is later determined that Contractor's representations and warranties in Paragraphs A and B of this Article 12 were erroneous on the effective date of this Agreement or have become erroneous by reason of new or changed circumstances, in addition to other remedies available to the City and

notwithstanding anything in the Agreement to the contrary, the City may immediately terminate the Agreement.

D. All terms defined in the Governmental Conduct Act have the same meaning in this section.

14. **Amendment.**

A. This Agreement shall not be altered, changed or amended except by instrument in writing executed by the parties hereto and all other required signatories.

B. If the City proposes an amendment to the Agreement to unilaterally reduce funding due to budget or other considerations, the Contractor shall, within thirty (30) days of receipt of the proposed Amendment, have the option to terminate the Agreement, pursuant to the termination provisions as set forth in Article 4 herein, or to agree to the reduced funding.

15. **Entire Agreement.**

This Agreement, together with any other documents incorporated herein by reference and all related Exhibits and Schedules constitutes the sole and entire agreement of the Parties with respect to the subject matter of this Agreement, and supersedes all prior and contemporaneous understandings, agreements, representations, and warranties, both written and oral, with respect to the subject matter. In the event of any inconsistency between the statements in the body of this Agreement, and the related Exhibits and Schedules, the statements in the body of this Agreement shall control.

16. **Penalties for violation of law.**

The Procurement Code, Sections 13-1-28 through 13-1-199, NMSA 1978, imposes civil and criminal penalties for its violation. In addition, the New Mexico criminal statutes impose felony penalties for illegal bribes, gratuities and kickbacks.

17. **Equal Opportunity Compliance.**

The Contractor agrees to abide by all federal and state laws and rules and regulations, and Santa Fe City Code, pertaining to equal employment opportunity. In accordance with all such laws of the State of New Mexico, the Contractor assures that no person in the United States shall, on the grounds of race, religion, color, national origin, ancestry, sex, age, physical or mental handicap, or serious medical condition, spousal affiliation, sexual orientation or gender identity, be excluded from employment with or participation in, be denied the benefits of, or be otherwise subjected to discrimination under any program or activity performed under this Agreement. If Contractor is found not to be in compliance with these requirements during the life of this Agreement, Contractor agrees to take appropriate steps to correct these deficiencies.

18. **Applicable Law.**

The laws of the State of New Mexico shall govern this Agreement, without giving effect to its choice of law provisions. Venue shall be proper only in a New Mexico court of competent jurisdiction in accordance with NMSA 1978, sec. 38-3-2 . By execution of this Agreement, Contractor acknowledges and agrees to the jurisdiction of the courts of the State of New Mexico over any and all lawsuits arising under or out of any term of this Agreement.

19. **Workers Compensation.**

The Contractor agrees to comply with state laws and rules applicable to workers compensation benefits for its employees. If the Contractor fails to comply with the Workers Compensation Act and applicable rules when required to do so, this Agreement may be terminated by the City.

20. **Professional Liability Insurance.**

Contractor shall maintain professional liability insurance throughout the term of this Agreement providing a minimum coverage in the amount required under the New Mexico Tort Claims Act. The Contractor shall furnish the City with proof of insurance of Contractor's compliance with the provisions of this section as a condition prior to performing services under this Agreement.

21. **Other Insurance**

If the services contemplated under this Agreement will be performed on or in City facilities or property, Contractor shall maintain in force during the entire term of this Agreement, the following insurance coverage(s), naming the City as additional insured.

A. **Commercial General Liability** insurance shall be written on an occurrence basis and be a broad as ISO Form CG 00 01 with limits not less than $2,000,000 per occurrence and $2,000,000 in the aggregate for claims against bodily injury, personal and advertising injury, and property damage. Said policy shall include broad form Contractual Liability coverage and be endorsed to name the City of Santa Fe their officials, officers, employees, and agents as additional insureds.

B. **Business Automobile Liability** insurance for all owned, non-owned automobiles, with a combined single limit not less than $1,000,000 per accident.

C. **Broader Coverage and Limits.** The insurance requirements under this Agreement shall be the greater of (1) the minimum coverage and limits specified in this Agreement, or (2) the broader coverage and maximum limits of coverage of any insurance policy or proceeds available to the Named Insured. It is agreed that these insurance requirements shall not in any way act to reduce coverage that is broader or that includes higher limits than the minimums required herein. No representation is made that the minimum insurance requirements of this Agreement are sufficient to cover the obligations of Contractor hereunder.

D. Contractor shall maintain the above insurance for the term of this Agreement and name the City as an additional insured and provide for 30 days cancellation notice on any Certificate of Insurance form furnished by Contractor. Such certificate shall also specifically state the coverage provided under the policy is primary over any other valid and collectible insurance and provide a waiver of subrogation.

22. **Records and Financial Audit.**

The Contractor shall maintain detailed time and expenditure records that indicate the date;

time, nature and cost of services rendered during the Agreement's term and effect and retain them for a period of three (3) years from the date of final payment under this Agreement. The records shall be subject to inspection by the City. The City shall have the right to audit billings both before and after payment. Payment under this Agreement shall not foreclose the right of the City to recover excessive or illegal payments

23. **Indemnification.**

The Contractor shall defend, indemnify and hold harmless the City from all actions, proceeding, claims, demands, costs, damages, attorneys' fees and all other liabilities and expenses of any kind from any source which may arise out of the performance of this Agreement, caused by the negligent act or failure to act of the Contractor, its officers, employees, servants, subcontractors or agents, or if caused by the actions of any client of the Contractor resulting in injury or damage to persons or property during the time when the Contractor or any officer, agent, employee, servant or subcontractor thereof has or is performing services pursuant to this Agreement. In the event that any action, suit or proceeding related to the services performed by the Contractor or any officer, agent, employee, servant or subcontractor under this Agreement is brought against the Contractor, the Contractor shall, as soon as practicable but no later than two (2) days after it receives notice thereof, notify the legal counsel of the City.

24. **New Mexico Tort Claims Act**

Any liability incurred by the City of Santa Fe in connection with this Agreement is subject to the immunities and limitations of the New Mexico Tort Claims Act, Section 41-4-1, et. seq. NMSA 1978, as amended. The City and its "public employees" as defined in the New Mexico Tort Claims Act, do not waive sovereign immunity, do not waive any defense and do not waive any limitation of liability pursuant to law. No provision in this Agreement modifies or waives any provision of the New Mexico Tort Claims Act.

25. **Invalid Term or Condition.**

If any term or condition of this Agreement shall be held invalid or unenforceable, the remainder of this Agreement shall not be affected and shall be valid and enforceable.

26. **Enforcement of Agreement.**

A party's failure to require strict performance of any provision of this Agreement shall not waive or diminish that party's right thereafter to demand strict compliance with that or any other provision. No waiver by a party of any of its rights under this Agreement shall be effective unless express and in writing, and no effective waiver by a party of any of its rights shall be effective to waive any other rights.

27. **Notices.**

Any notice required to be given to either party by this Agreement shall be in writing and shall be delivered in person, by courier service or by U.S. mail, either first class or certified, return receipt requested, postage prepaid, as follows:

To the City:
Environmental Services Division Director (Current Shirlene E. Sitton),
1142 Siler Road
Santa Fe, NM 87507
sesitton@santafenm.gov

To the Contractor:
Joseph J. Tracy, INTERA Inc. Vice President
2440 Louisiana BLVD, NE, Suite 700
Albuquerque, NM 87110
jjarrard@huitt-zollars.com

28. **Authority.**

If Contractor is other than a natural person, the individual(s) signing this Agreement on behalf of Contractor represents and warrants that he or she has the power and authority to bind Contractor, and that no further action, resolution, or approval from Contractor is necessary to enter into a binding contract.

29. **Merger.**

This Agreement incorporates all the Agreements, covenants and understandings between the parties hereto concerning the subject matter hereof, and all such covenants, Agreements and understandings have been merged into this written Agreement. No prior Agreement or understanding, oral or otherwise, of the parties or their agents shall be valid or enforceable unless embodied in this Agreement.

30. **Non-Collusion.**

In signing this Agreement, the Contractor certifies the Contractor has not, either directly or indirectly, entered into action in restraint of free competitive bidding in connection with this offer submitted to the City's Chief Procurement Officer.

31. **Default/Breach.**

In case of Default and/or Breach by the Contractor, for any reason whatsoever, the City may procure the goods or services from another source and hold the Contractor responsible for any resulting excess costs and/or damages, including but not limited to, direct damages, indirect damages, consequential damages, special damages and the City may also seek all other remedies under the terms of this Agreement and under law or equity.

32. **Equitable Remedies.**

The Contractor acknowledges that its failure to comply with any provision of this Agreement will cause the City irrevocable harm and that a remedy at law for such a failure would

be an inadequate remedy for the City, and the Contractor consents to the City 's obtaining from a court of competent jurisdiction, specific performance, or injunction, or any other equitable relief in order to enforce such compliance. The City's rights to obtain equitable relief pursuant to this Agreement shall be in addition to, and not in lieu of, any other remedy that the City may have under applicable law, including, but not limited to, monetary damages.

33. **Default and Force Majeure.**

The City reserves the right to cancel all or any part of any orders placed under this Agreement without cost to the City, if the Contractor fails to meet the provisions of this Agreement and, except as otherwise provided herein, to hold the Contractor liable for any excess cost occasioned by the City due to the Contractor's default. The Contractor shall not be liable for any excess costs if failure to perform the order arises out of causes beyond the control and without the fault or negligence of the Contractor; such causes include, but are not restricted to, acts of God or the public enemy, acts of the State or Federal Government, fires, floods, epidemics, quarantine restrictions, strikes, freight embargoes, unusually severe weather and defaults of subcontractors due to any of the above, unless the City shall determine that the supplies or services to be furnished by the subcontractor were obtainable from other sources in sufficient time to permit the Contractor to meet the required delivery scheduled. The rights and remedies of the City provided in this Clause shall not be exclusive and are in addition to any other rights now being provided by law or under this Agreement.

IN WITNESS WHEREOF, the Parties have executed this Agreement as of the date of the signature by the required approval authorities below.

CITY OF SANTA FE:

John Blair
John Blair (Sep 25, 2023 11:24 MDT)
JOHN BLAIR, CITY MANAGER

DATE: Sep 25, 2023

CONTRACTOR:

Joseph J Tracy
JOSEPH J. TRACY

VICE PRESIDENT
TITLE

DATE: Aug 31, 2023
CRS#74-3010638

Registration #22 78 29

ATTEST:

KRISTINE BUSTOS MIHELCIC, CITY CLERK XIV

CITY ATTORNEY'S OFFICE:

Marcos Martinez

SENIOR ASSISTANT CITY ATTORNEY

APPROVED FOR FINANCES:

Emily K. Oster

Emily K. Oster (Sep 25, 2023 11:21 MDT)

EMILY OSTER, FINANCE DIRECTOR
Fund 510 Org 5100831 Object 510300

INTERA Incorporated
2460 Louisiana Blvd. NE, Suite 700
Albuquerque, NM 87110 USA
505.246.1600

August 25, 2023

Mr. Lawrence Garcia
Environmental Services Division (ESD)
ESD Fleet Manager
City of Santa Fe
1142 Siler Road
Santa Fe, New Mexico 87507

RE: Four Quarters of New Mexico Environment Department (NMED) Ground Water Quality Bureau (GWQB) Stage 1 Abatement Plan Monitoring and Reporting for the Former Frank Ortiz Landfill and Four Quarters of NMED Solid Waste Bureau (SWB) Monitoring and Reporting for the Paseo de Vista Landfill, Santa Fe, Santa Fe County, New Mexico – Contract Assignment

Dear Mr. Garcia,

INTERA Incorporated (INTERA) will extend the same cost for services via the City of Albuquerque Procurement Contract #SHRD00022790 (Contract) which was approved on February 1, 2023 and will expire on January 1, 2027. The approval will provide the City of Santa Fe (City), groundwater monitoring, soil vapor monitoring and other environmental and engineering services for the City's two closed landfills sites (Former Frank Ortiz Landfill and Former Paseo de Vista Landfill). As you are aware, INTERA was under contract with the City for these services (Contract No. 19-0326; Munis Contract No. 3200917) which expired on June 30, 2023. INTERA has institutional knowledge of both landfills, and the regulatory requirements posed by both the NMED GWQB and the SWB which have jurisdiction of these closed landfills. The City of Albuquerque Procurement Contract No. SHRD00022790 has a scope of work which meets the requirements for management of the GWQB and SWB regulations. The estimated amount utilizing the City of Albuquerque Procurement Contract to provide the required regulatory services for the City within Fiscal Year 24 is $240,489.01 (New Mexico Gross Receipts Tax of 8.1875% included).

Scope of Work

The locations of the landfills are shown on Figure 1. The activities listed below and detailed in Table 1 will be performed throughout the four consecutive quarters from the third quarter of 2023 through the second quarter of 2024 (FY 24). All Site work and report deliverables will be completed in accordance with amended work plan approved by the GWQB as detailed in the Site Sampling and Analysis and Quality Assurance Project Plan for Waste and Vadose Zone Characterization (Revision 3.0 dated November 6, 2019) and Stage 1 Abatement Plan Modification Surface Emissions Monitoring (SEM) Activities dated September 23, 2021. The proposed schedule for Site work and report deliverable development is detailed below.

Table 1

Quarter	Item Task	Deliverable
2023 3rd Quarter	• Surface Emissions Monitoring Event • Landfill Gas Monitoring Event	Letter Report with Figures and Tables summarizing SEM and LFG event results
2023 4th Quarter	• Surface Emissions Monitoring Event • Landfill Gas Monitoring Event • Groundwater Monitoring Event • Soil Vapor Collection Event	Report with Figures and Tables summarizing all field task results and evaluating Site conditions
2024 1st Quarter	• Surface Emissions Monitoring Event • Landfill Gas Monitoring Event	Letter Report with Figures and Tables summarizing SEM and LFG event results
2024 2nd Quarter	• Surface Emissions Monitoring Event • Landfill Gas Monitoring Event • Groundwater Monitoring Event • Soil Vapor Collection Event • Final Benchmark Settlement Report	Report with Figures and Tables summarizing all field task results and evaluating Site conditions

INTERA appreciates the opportunity to continue to work with ESD on this project. Please contact me at (505) 901-1184 or jtracy@intera.com with any questions.

Sincerely,
INTERA Incorporated

Joseph J. Tracy
Vice President/Principal Geologist

Enclosures:

- Figure 1 – Landfill Locations – Site Vicinity Map
- INTERA W-9
- INTERA Certificate of Insurance (COI)
- INTERA City of Santa Fe Business License

INTERA

EXHIBIT "A" 1 of 18

City of Albuquerque
Procurement Contract

INTERA INC
9600 GREAT HILL TRAIL STE 300W
AUSTIN TX 78759

James Joseph
605.240.1600 x1209
jjoseph@intera.com
psalter@intera.com

Supplier ID: 0000136272

Contract ID	[redacted]
Contract Dates	[redacted]
Contract Reference	[redacted]
Contract Maximum	$0.00
Contract Print Date	01/18/2023
Origin	BWD
Page 1 of 15	

Description: GHG and LFG Operations

ITEM #	ITEM DESCRIPTION	Category	QTY	UOM	UNIT PRICE
1	GHG Emissions NMED Methane Monitoring Project Manager $117.50 hourly Engineer $222.00 hourly Technician $126.00 hourly	96540	-	EA	0.00
2	GHG Emissions GHG Monitoring and Reporting Engineer $222.00 hourly	96540	-	EA	0.00
3	GCCS Monthly Monitoring Project Manager $117.50 hourly Engineer $222.00 hourly Technician $126.00 hourly	96540	-	EA	0.00
4	GCCS Quarterly Monitoring Project Manager $117.50 hourly Engineer $222.00 hourly Technician $126.00 hourly	96540	-	EA	0.00
5	GCCS Operations Monthly Balancing Project Manager $117.50 Engineer $222.00 Technician $126.00	96540	-	EA	0.00
6	GCCS Monthly Maintenance Project Manager $222.00 Technician $126.00	96540	-	EA	0.00
7	GCCS Quarterly Maintenance Project Manager $222.00 Technician $126.00	96540	-	EA	0.00
8	GCCS Monthly Reporting Project Manager $222.00	96540	-	EA	0.00
9	GCCS Quarterly Reporting Project Manager $222.00	96540	-	EA	0.00
10	GCCS Air Quality Semi-Annual Reporting Project Manager $222.00	96540	-	EA	0.00
11	GCCS Air Quality Annual Reporting Project Manager $222.00	96540	-	EA	0.00
12	GCCS Flare Performance Test in accordance with Authority to Construct and Title V Permit Project Manager $222.00 Engineer $222.00 Technician $126.00	96540	-	EA	0.00

Purchasing Office Signature:

City of Albuquerque
Procurement Contract

INTERA INC
9600 GREAT HILL TRAIL STE 380W
AUSTIN TX 75730

James Joseph
505.246.1600 x1209
jjoseph@intera.com
psalter@intera.com

Supplier ID: 0000186272

Contract ID	SHR000022780
Contract Dates	02/01/2022 - 01/31/2027
Contract Reference	RFB-2022-322-DSW-CG
Contract Maximum	$0.00
Contract Print Date	01/19/2022
Origin	SWD
Page 2 of 15	

13	GCCS Typical Repairs- Relocation of Temperature Probe on Flare Stack Project Manager $117.50 Engineer $222.00 Technician $126.00	98846	-	EA	0.00
14	GCCS Typical Repairs- Remove, Calibrate, Re-Install FCI ST-98-21CTO Flow Meter (or equivalent) (once per 18 months) Project Manager $117.50 Engineer $222.00 Technician $126.00	98846	-	EA	0.00
15	GCCS Typical Repairs- Remove and Send for Re-building (1) 40 HP Houston Service Industries 08108 Blower (or equivalent), Re-Install with New Belts Project Manager $222.00 Technician $126.00	98846	-	EA	0.00
16	GCCS Typical Repairs- Remove Old and Install New UV Flame Detector C7035A1031 (or equivalent) and/or Sensor Project Manager $125.00 Engineer $222.00 Technician $126.00	98846	-	EA	0.00
17	GCCS Typical Repairs- Remove, send for Rewinding, Re-Install (1) WEG Blower Motor Model 0438EP3E324T9 40HD (or equivalent) Project Manager $222.00 Engineer $222.00 Technician $126.00	98846	-	EA	0.00
18	GCCS Typical Repairs- Well Extension Project Manager $117.50 Engineer $222.00 Technician $126.00	98846	-	EA	0.00
19	GCCS *Emergency Response and Reporting - Regular Business Hours Project Manager $150.00 Engineer $236.01 Technician $133.97	98846	-	EA	0.00
20	GCCS *Emergency Response and Reporting - After Hours Project Manager $150.00 Engineer $236.01 Technician $133.97	98846	-	EA	0.00

Purchasing Office Signature:

City of Albuquerque
Procurement Contract

INTERA INC
9400 GREAT HILL TRAIL STE 300W
AUSTIN TX 78759

James Joseph
505.246.1600 x1200
jjoseph@intera.com
psaltar@intera.com

Supplier ID: 0000138272

Contract ID	SHR000022790
Contract Dates	02/01/2023 - 01/31/2027
Contract Reference	RFB-2022-323-DSW-CG
Contract Maximum	$0.00
Contract Print Date	01/19/2023
Origin	SWD
Page 3 of 15	

21	GCCS *Miscellaneous Tasks, Reporting and Meetings and/or Required Regulatory Follow Up Project Manager $150.00 Engineer $239.21 Technician $135.77	98848	-	EA	0.00
22	LFG Transmission Pipeline Routine Operation and Maintenance Project Manager $117.50 Engineer $222.00 Technician $126.00	98848	-	EA	0.00
23	LFG Transmission Pipeline Pipeline Patrolling/Leak Detection Surveys biannual patrolling annual leak detection Project Manager $222.00 Technician $126.00	98848	-	EA	0.00
24	LFG Transmission Pipeline Annual Reporting to the United States (US) Department of Transportation (DOT) Annual DOT/PSB Reporting Project Manager $222.00 Engineer $222.00	98848	-	EA	0.00
25	LFG Transmission Pipeline Annual Operations Review, Plan Updates, Training Pipeline Plan Review and Updates Project Manager $117.50 Engineer $222.00 Technician $126.00	98848	-	EA	0.00
26	LFG Transmission Pipeline Operator Training, Evaluation, Qualification Project Manager $117.50 Engineer $222.00 Technician $126.00	98848	-	EA	0.00
27	LFG Transmission Pipeline Pipeline Cleaning/Pigging in accordance with manual includes shut down, purging, pigging and start up Project Manager $117.50 Engineer $222.00 Technician $126.00	98848	-	EA	0.00
28	LFG Transmission Pipeline Abnormal Condition Response as defined by NMPRC Project Manager $124.92 Engineer $236.01 Technician $133.95	98848	-	EA	0.00

Purchasing Office Signature:

City of Albuquerque
Procurement Contract

INTERA INC
[redacted] GREAT HILL TRAIL STE 300W
AUSTIN TX 78759

James Joseph
505.246.1600 x1209
jjoseph@intera.com
psalter@intera.com

Supplier ID: 0000136272

Contract ID	[redacted]
Contract Dates	02/01/2023 - 01/31/2027
Contract Reference	[redacted]
Contract Maximum	$0.00
Contract Print Date	01/[redacted]
Origin	SWD
Page 4 of 15	

29	LFG Transmission Pipeline *Emergency Response and Reporting - Regular and After Business Hours Project Manager $124.92 Engineer $236.01 Technician $133.95	88846	-	EA	0.00
30	LFG Transmission Pipeline *Miscellaneous Tasks, Reporting and Meetings and/or Required Regulatory Follow Up Project Manager $126.61 Engineer $239.21 Technician $135.77	88846	-	EA	0.00
31	Non Labor Expenses for all tasks	88846	-	EA	0.00

Title: Greenhouse Gas (GHG) and Landfill Gas (LFG) Operations, Maintenance and Monitoring at the Albuquerque Cerro Colorado Landfill (CCFL)

Term: 02/01/2023 - 01/31/2027

The City of Albuquerque shall enter into a contract for Greenhouse Gas (GHG) Emissions Monitoring and Reporting; Landfill Gas (LFG) Collection and Control System (GCCS) Operations, Maintenance, Monitoring, Reporting, Performance Tests, Repair and Emergency Response; LFG Transmission Pipeline Operations, Maintenance, Monitoring, Testing, Reporting, Plan Review, Updates, Training, Pigging, Repair and Emergency Response; Leachate Management Monitoring, Maintenance and Reporting, and Ground Water Sampling at the City of Albuquerque Cerro Colorado Landfill (CCFL); - in accordance with the terms, conditions, and specifications set forth herein.

Non-Labor Expenses shall be allowed and applied for each group of tasks at cost.

Anytime parts or materials must be purchased or equipment rented, repaired or replaced, or subcontractors must be hired, contractor will bill City at cost.

This contract is subject to the Code of Federal Regulations. To view the Code of Federal Regulations, go to: www.ecfr.gov

Intera Inc. shall provide services required for:
- Greenhouse Gas (GHG) Emissions - Monitoring and Reporting.
- Landfill Gas (LFG) Collection and Control System (GCCS) - Operation, maintenance, monitoring, reporting, performance testing, repair and emergency response for the LFG GCCS to include the landfill open flare and all attached equipment.
- Landfill Gas (LFG) Transmission Pipeline - Operation, maintenance, monitoring, testing, reporting, plan review, updates, training, pigging, repair and emergency response for the LFG Transmission Pipeline.

Purchasing Office Signature:

City of Albuquerque
Procurement Contract

INTERA INC
9600 GREAT HILL TRAIL STE 300W
AUSTIN TX 78759

Contract ID	SHR000022799
Contract Dates	02/01/2023 - 01/31/2027
Contract Reference	RFS-2022-322-DSW-CG
Contract Maximum	$0.00
Contract Print Date	01/10/2023
Origin	SWD
Page 5 of 15	

James Joseph
505.246.1600 x1200
jjoseph@intera.com
psalter@intera.com

Supplier ID: 0000139272

Intera Inc shall perform all required monitoring and reporting necessary to prevent any non-compliance with applicable federal, state, and local regulations or pose a health or safety threat to the public or staff. Applicable federal regulations shall specifically include the requirements specified under 40 CFR Parts 60, 62 and 98 and 40 CFR 191 and 192.

GREENHOUSE GAS (GHG) EMISSIONS MONITORING AND REPORTING
The CCLF is subject to the provisions in 40 CFR 98 Subpart HH - "Mandatory Reporting of GHG for Municipal Solid Waste Landfills". The CCLF currently operates under a GHG Monitoring Plan written and submitted March 31, 2010, to demonstrate compliance with 40 CFR 98.3(g) (5). In addition to the landfill emissions, the plan identifies several stationary sources at the CCLF that require reporting under 40 CFR 98, including, but not necessarily limited to, the flare station pilot, propane heaters at the landfill office trailers and the heavy equipment shop. Annual fuel usage at these identified sources is recorded and maintained for use in calculating annual GHG Emissions for each combustion source. Per 40 CFR 98.30, none of these sources fall under the current combustion source reporting requirements (flares are categorically exempted and portable sources are not required to report).

Intera Inc shall be responsible for:.
Quarterly methane monitoring using barhole probes in accordance with the Cerro Colorado Landfill's New Mexico Environment Department (NMED) approved Landfill Gas Monitoring Plan (Permit # SWM-010221, SWM-010221(SP), Volume II B, Section 6). In general, monitoring involves measuring methane levels from twelve (12) points along active cell perimeters and within six (6) structures located on landfill property using an appropriate portable gas analyzer.

All monitoring and reporting as outlined in the facility GHG Monitoring Plan and in accordance with any updates in protocols or procedures pursuant to 40 CFR 98 Subpart HH. Calculations of modeled methane generation will include:

Modeled methane generation (98.343(a)). Quantities of methane recovered for destruction (98.343(b)). Calculated methane emissions including flare destruction (98.343(c). Calculated carbon dioxide, methane, and nitrous oxide emissions for general stationary fuel combustion sources (98.33(a) (1), (c) (1). Quality assurance of GEM 2000 (or equivalent) in accordance with 98.344(b) (6) (ii)-Annual Calibration for NMOC. Quality assurance of the Open Flare via one of the methods listed 40 CFR 98.344(b)

The issuance and quality assurance of all reports issued directly to EPA under the provisions of 40 CFR 98 Subpart HH. All reporting, both emissions and quality assurance, shall comply with the specific requirements of the EPA Region governing GHG Monitoring, and shall comply with the written GHG site specific Monitoring Plan. Two (2) hard copies and electronic versions of all reports shall be provided to the CCLF upon issuance to EPA. The annual GHG data is required to be submitted directly into the EPA eGRT (electronic Greenhouse Gas Reporting Tool). Coordination with the SWMD eGRT signatory authority is required to electronically sign and submit the report.

Purchasing Office Signature:

City of Albuquerque
Procurement Contract

INTERA INC
6600 GREAT HILL TRAIL STE 300W
AUSTIN TX 78759

Contract ID	SHR000022790
Contract Dates	02/01/2023 - 01/31/2027
Contract Reference	RFB-2022-322-DSW-CG
Contract Maximum	$0.00
Contract Print Date	01/19/2023
Origin	SWD
Page 6 of 15	

James Joseph
505.246.1590 x1209
jjoseph@intera.com
psalter@intera.com

Supplier ID: 0000138272

LFG COLLECTION AND CONTROL SYSTEM (GCCS)

Detailed Description

At this time, the GCCS at the CCFL consists of 58 vertical extraction wells 5 horizontal collectors and 6 leachate risers.

The landfill flare station currently in use is an LFG Specialties model PCF103018, equipped with a knock off pot, actuator valve, two (2) 40 hp. blowers with adjusting butterfly valves, flow meter, Varec flame arrestor, pilot gas system, flare stack, and a Flame Trol III control center.

Expansion of the system may be necessary dependent upon emissions and applicable Air Quality regulations. A contingency has been developed and involves three (3) horizontal collectors, each approximately 1,000 feet long.

GCCS Monitoring

The Intera Inc. shall provide the required instrumentation (Gastech or Landtec GEM 5000 or equivalent) for ongoing gas analysis and data collection of the LFG system at the CCLF.

GCCS Monthly Monitoring:

As per 40 CFR Part 60 once each month the LFG collection wells shall be monitored for methane, oxygen, carbon dioxide, temperature and flow rate and shall be balanced. Appropriate adjustments shall be made and wells requiring correction shall be re-monitored as necessary to facilitate system compliance and assure adequate overall performance of the system, as outlined under 40 CFR Part 60. Visual determination of fugitive emissions from the flare shall be monitored monthly using EPA¿s Method 22. At the same time, record equipment hours and usage for emission units listed in Section 2, Tables 4 and 5 of Title V Permit # 0537-M1-RN1 as applicable.

GCCS Quarterly Monitoring:

(Once every three [3] months): Surface and cover penetration monitoring of the applicable portions of the CCFL shall be accomplished using either a flame ionization detector or a photo ionization detector as specified under 40 CFR 60. Areas of elevated readings shall be recorded and appropriate reporting and remediation implemented in shall order to assure ongoing compliance with any federal, state, or local regulations or established conditions. The surface emissions monitoring shall be conducted along a design pattern that traverses the landfill surface along 30 meter intervals, but only in those areas with waste in place that is more than (5) years in age.

GCCS Operation

Monthly: At least once every 30 days adjustments must be made to the flow rate at each of the LFG extraction wells based on the information obtained during monitoring of the individual wells and at the flare station itself. Adjustments shall ensure that LFG will be collected at a rate that maintains a negative gauge pressure vacuum at all wellheads without an increase in oxygen, per 40 CFR 60.751. As specified in the federal regulations, the parameters of concern are LFG composition, LFG pressure and/or vacuum, wellhead temperature, and flow velocity. Adjustments to the vacuum and subsequent flow rate at the flare station are also required in order to maintain correct balance with the extraction system.

The primary purpose of the extraction

Purchasing Office Signature:

INTERA INC
9600 GREAT HILL TRAIL, STE 3[redacted]W
AUSTIN TX 78759

James Joseph
[redacted]
jjoseph@intera.com
pwalker@intera.com

Supplier ID: [redacted]

monitoring and balancing to minimize landfill surface, cover penetration emissions, and control the possible off-site migration of LFG in order to maintain regulatory compliance. All additional adjustments required to meet the requirements outlined in the applicable CFR's must be completed in a timely fashion and must demonstrate compliance with the applicable regulations. The awarded offeror must have experience with the new provisions and the 5/15 day rules as established under the revised and updated CFR.
GCCS Maintenance

Monthly: Intera Inc. shall conduct visible inspection of all system components, to include wellheads, exposed lines, valves and port connections, and the flare system itself. Any problems noted should be immediately reported to the appropriate landfill staff, along with recommendations for repair and/or any problems noted should be immediately reported to the appropriate landfill staff, along with recommendations for repair and/or repair and replacement as needed. The contractor shall insure the proper operation of the Flame Trol II Control Center and all other flare components. Contractor shall change the flare chart recorder paper a minimum of four (4) times per month and lubricate the bearings on each of the blowers twice per week, or eight (8) times per month using only the manufacturers recommended lubricant. NOTE: The Landfill FOC information will be provided at the time of award.

Quarterly: The Intera Inc. shall be responsible for the following:
Monitoring the pressure drop across the mist extraction pad at maximum LFG flow, and clean the pad when the pressure drop has increased to twice the normal pressure drop for the clean pad condition.

Insure proper operation of the pneumatic valve actuator. Lubricate actuator and valve mechanism per manufacturer's recommendations.

Start the non-operating blower monthly to prevent motor or bearing freeze up.

Inspect the operational blower, listening for unusual noises and feeling for abnormal vibrations or excessive heat.

Ensure bearings on each of the blowers are lubricated as mentioned above, using only the manufacturers recommended lubricant.

Check the pressure drop across the flame arrestor. If the pressure drop exceeds two (2) inches of water column at maximum LFG flow, then the flame arrestor must be cleaned according to manufacturer's recommendations.

Insure the proper operation of the propane fuel pilot ignition system, including removal and replacement of empty propane tanks, as needed.

Inspect the condition of the UV Flame detector and replace the detector if damaged or not properly functioning.

Adjust the burner tip orifice to stabilize flare operation, as required. Confirm the calibration of the thermal flow

Purchasing Office Signature:

INTERA INC
9600 GREAT HILL TRAIL STE 300W
AUSTIN TX 78759

James Joseph
512.346.1620 x1209
jjoseph@intera.com
pschaefer@intera.com

Supplier ID: 0000120272

Contract ID	BHR800022790
Contract Dates	02/01/2022 - 01/31/2027
Contract Reference	RFB-2022-322-DSW-CC
Contract Maximum	$0.00
Contract Print Date	01/19/2022
Origin	SWD

center, using an independent Pitot tube. Inspect the control panel and test indicator lights for proper operation, and replace bulbs as required.

GCCS Reporting
All reporting shall conform to the requirements established under 40 CFR Part 63.
Monthly Reporting: The Intera Inc. shall prepare a detailed report for the City of Albuquerque Solid Waste Management Department (SWMD) containing the emissions data collected during the previous month, and a summary of the activity performed during the previous month. Two (2) hard copies of the report and an electronic version shall be provided to the SWMD, and the information maintained on a contractor database in order to appropriately track any long term trends in the LFG collection system that would justify future operation modifications or additions. An ongoing log should be maintained of each inspection and site visit, with details of any deficiencies discovered and actions taken to remedy the problems.

Quarterly Reporting: The Intera Inc. shall prepare a detailed report for the SWMD containing the data collected during the required surface and cover penetration monitoring, to include instrument calibration and a monitoring log, along with appropriate weather data and other information, as required. The report shall include all maintenance done during the previous quarters, including checks of all the system components. Two (2) hard copies of each of these reports and an electronic version shall be provided to the SWMD, and the information maintained on a contractor held database in order to appropriately track any long term trends in the surface monitoring and/or repairs and maintenance.

Air Quality Semi-Annual Reporting: Prepare and submit emission unit reports and the Certified Compliance Progress Report semi-annually in accordance with Albuquerque/Bernalillo County Air Quality Control Board Title V Operating Permit #0537-M1-RN1 .

Air Quality Annual Reporting: Prepare and submit the Annual Compliance Certification and Emissions Inventory Report in accordance with Albuquerque/Bernalillo County Air Quality Control Board Title V Operating Permit #0537-M1-RN1 and the EPA Air Quality Regulations.

Performance Tests
Flare Performance Test: Within 365 days of the previous flare performance test, Bidder shall, on an annual basis, conduct a flare performance test in accordance with the Authority to Construct and Title V Permit Operating Permit #0537-M1-RN1 . Task includes submission of the protocol, required notification as prescribed, and report preparation and timely submission to the governing authority/ies. Two (2) hard copies of this report and an electronic version shall be provided to the SWMD, and the information maintained on a contractor held database in order to appropriately track any long term trends in the flare performance.

GCCS Typical Repairs
- Relocation of Temperature Probe on Flare Stack
- Remove, calibrate, and re-install (once per 18 months) an FCI ST-95-21 CTO flow meter (or equivalent)
- Remove and send for re-building one (1) 40 HP Houston

Purchasing Office Signature:

INTERA INC
[redacted] GREAT HILL TRAIL STE 300W
AUSTIN TX 7873[redacted]

James Joseph
[redacted].246.1600 x1209
jjoseph@intera.com
psalter@intera.com

Supplier ID: 0000138272

Contract ID	[redacted]
Contract Dates	[redacted]
Contract Reference	RFB-2022-322-DSW-CC
Contract Maximum	[redacted]
Contract Print Date	[redacted]
Origin	DWD

- Service Industries 85103 Blower (or equivalent), re-install with new belts
- Remove old and install new UV Flame Detector C7035A1001 (or equivalent) and/or sensor
- Remove, send for re-winding, re-install one (1) WEG blower motor Model [redacted] 40HP (or equivalent)
- GSSC wall extension, assume electrofusion welding

Emergency Response, Reporting and Corrective Action
The Intera Inc. shall be able to respond within a 24-hour time frame to address any issues and/or repairs to the GCCS and flare and associated reporting requirements. This includes trouble shooting or corrective action required on any part of the system to be maintained as listed under Part be 3, Section B. A contact list shall be provided at the time of the award, with appropriate phone numbers in order for [redacted] staff to call for assistance, as needed.

Miscellaneous Tasks, Reporting, And Meetings

Gas Control and Collection Systems are highly regulated and typically develop needs that have not been anticipated during the planning and construction process. To address unanticipated needs, this task was developed to ensure a mechanism is in place for Bidder to assist with, but not be limited to, miscellaneous meetings, the development of reports or additional plans, responses to expansions or changes in regulatory conditions.

The bidder shall submit an hourly billing rate for any technicians or engineer's time that the contractor feels might be necessary to facilitate trouble shooting, corrective action to include required repairs, and associated reporting for any portion of the GCCS.

LFG TRANSMISSION PIPELINE

The LFG Transmission Pipeline is approximately two (2) miles long and is used to convey treated LFG treated from the CCLF to the Metropolitan Detention Center (MDC) where it is used as a fuel source to fire boilers providing hot water and comfort heat.

Routine Operation and Maintenance (O&M):
Routine O&M includes primarily the infrastructure at the compression skid. It includes weekly site visits to confirm proper operation and check for "abnormal conditions". Routine O&M is assumed to include the following activities.
- Weekly site visits to the compression skid to review and record systems parameters, bi-weekly visits to grease components
- Cleaning/changing the filters on the condensate knock out vessels
- Adding and/or changing the glycol coolant
- Lean y-strainers
- Change oil (every three months)
- Check belt tension and replace belts as needed.
- Maintain standing water in dip trap
- Calibrate flow meters

Purchasing Office Signature:

INTERA INC
9600 GREAT HILL TRAIL STE 300W
AUSTIN TX 78759

James Joseph
512.346.1600 x1209
jjoseph@intera.com
psaha@intera.com

Contract ID	[illegible]
Contract Dates	[illegible] - 01/31/2027
Contract Reference	[illegible]
Contract Maximum	$0.00
Contract Print Date	01/19/2023
Origin	SWD
Page 15 of 16	

Supplier ID: 0000135272

- Clean air filters
- Download electronic chart recorder data and transmit it to the SWMD.
- Measure and document LFG quality with LFG analyzer
- Confirm proper interlocks with LFG flare skid
- Confirm proper functioning of alarm interlock
- Inspect steel piping (every three years) and complete report form
- Check cathodic protection system (annually) and complete report form
- Evaluate odorization of LFG and complete report form
- Pressure relief valve inspection and testing (annually) and complete report form
- Valve inspections and testing (annually) and complete report form
- Driving inspection of the pipeline route to check surface conditions, check for exposed sections of buried pipe, and confirm that pipe markers are in place and in good condition (every two weeks)
- Provide manufacturer support of the compression skid, as needed

The deliverable to the SWMD for this task shall be completion of the above specified items and conveyance of recorded/downloaded data and report forms on a monthly basis.

Pipeline Patrolling and Leak Detection Surveys

Pipeline patrolling and leak detection surveys will be performed as specified in sections 2.5 (49 CFR 192.614) and 3.2 of the O&M manual. The manual calls for biannual pipeline patrolling and annual leak detection surveys. The Bidder will walk the pipeline route during these events and complete the report form(s). Inspections will include listening for leaks, looking for subsidence, stressed vegetation, rilling/erosion, exposed pipeline, evidence of heavy traffic in areas other than identified in the O&M manual, and the detection of LFG (during the leak detection survey). The leak detection survey will be conducted with a flame ionization detector (FID) designed to meet the sensitivity requirements of the regulations. The FID will be calibrated in the field before each use. More frequent driving inspections of the pipeline are to be performed under the Routine O&M task above.

Annual Reporting to the United States (US) Department of Transportation (DOT)

An annual report must be submitted to the US DOT on or before March 15th each year. The report must be prepared using the DOT's form no. PHMSA 7100.2-1. On behalf of the SWMD, Bidder will complete the report form and transmit it electronically to the SWMD for review, and for submission, must coordinate with SWMD Point of Contact (POC) for the City's Executive electronic signature.

Annual Operations Review, Plan Updates, And Training

This task includes the review of the O&M, Emergency Response, Integrity Management, Public Awareness and Operator Qualification Plans and amendments as needed to address changing conditions, changes in regulation and/or necessary improvements. Bidder will provide annual training to qualify, requalify and evaluate operators in accordance with the Operator Qualification Plan. Most of the re-qualifications are on two-year cycles, however, an annual budget should be planned to allow for regular evaluations of qualified

Purchasing Office Signature:

INTERA INC
9600 GREAT HILL TRAIL STE 300W
AUSTIN TX 78759

James Joseph
[illegible].1600 x1209
jjoseph@intera.com
psalter@intera.com

Contract ID	SHR000022790
Contract Dates	02/01/2023 - 01/31/2027
Contract Reference	RFB-2022-322-DSW-CG
Contract Maximum	$0.00
Contract Print Date	01/18/2023
Origin	SWD

Supplier ID: 9000136272

operators and training of new staff (as required). Bidder shall include costs associated with the development and implementation of the drug testing for select Bidder employees as required by US DOT. Bidder shall also provide Public Awareness notices as required by the Public Awareness Plan.

Pipeline Cleaning

The 12-inch-high density polyethylene (HDPE) LFG transmission pipeline is constructed with pigging stations for the periodic cleaning of the pipeline. This task is designated "as needed". It is anticipated that the pipeline will not require cleaning more than twice during the term of this contract. Cleaning of the pipeline will be in accordance with the O&M manual and will include:

- Shutdown of the compression skid and pipeline (section 2.2.5 of the O&M manual).
- Purging of the pipeline in accordance with Appendix D of the O&M manual.
- Pigging of the line with a polyurethane pig.
- Start up and system monitoring to ensure proper operation.

Abnormal Condition Response

The pipeline and compression skid are designed to operate within normal specified ranges. When the system operates outside of these ranges, an "abnormal condition" is identified. The O&M manual identifies a list of abnormal conditions including:

- Low suction pressure at the LFG conditioning skid
- Low discharge pressure at the LFG conditioning skid.
- High discharge pressure at the LFG conditioning skid.
- Low inlet pressure at the MDC.
- High oxygen content.
- High LFG condition skid knockout pot level.
- Fire alarm at MDC.
- Methane alarm at MDC.

Identification of these conditions or notification by the MDC or SWMD of existing conditions at the MDC and of the pipeline will trigger a response as prescribed in the O&M manual. Bidder will identify and correct the condition within the scope of the contract. Once the condition has been corrected, the system will be checked daily for 5 days in accordance with 48 CFR 192.605. Intera Inc. will complete report forms and evaluation of operation as needed to develop a budget for this task, Bidder will assume one abnormal condition event each year.

Emergency Response and Reporting

This task pertains to conditions that are more extreme than or not included in the Abnormal Conditions identified above. An emergency response would be triggered by the detection of a leak, damage to the pipeline, or damage to any other portion of the infrastructure that could result in the need of an immediate

Purchasing Office Signature:

INTERA INC
9600 GREAT HILL TRAIL STE 300W
AUSTIN TX 78759

James Joseph
(704)843.1600 x1269
jjoseph@intera.com
psalter@intera.com

Contract ID	SHR000022780
Contract Dates	02/01/2023 - 01/31/2027
Contract Reference	RFB-2022-322-DSW-CG
Contract Maximum	$0.00
Contract Print Date	01/18/2023
Origin	SWD
Page 12 of 18	

Supplier ID: 0000138272

reaction to protect the safety of the public or SWMD personnel and contractors. The task also includes the completion of a US DOT incident report form for the SWMD to submit electronically to the US DOT.

Miscellaneous Tasks, Reporting, And Meetings

Gas transmission lines are highly regulated and typically develop needs that have not been anticipated during the planning and construction process. To address unanticipated needs, this task was developed to ensure a mechanism is in place for Bidder to assist with, but not be limited to, miscellaneous meetings, the development of reports or additional plans, responses to expansions or changes in regulatory conditions, and issues regarding delivery to the MDC.

INTERA INC. MAY BE TASKED WITH ADDITIONAL RESPONSIBILITIES ON A TIME AND MATERIAL BASIS:

Leachate Management
In accordance with the Cerro Colorado Landfill's New Mexico Environment Department (NMED) approved Leachate Management Plan (Permit # SWM-010221, SWM-010221(SP), Volume II B, Section 7), inspect leachate pond, manholes and pumps monthly. Monitor leachate production, measure and record volume and flow rates quarterly. Collect leachate samples annually. Prepare quarterly reports for submission to NMED that summarize flow rates and the volume of leachate pumped, disposal methods and disposal locations. Prepare also for submission to NMED an annual report of the sampling event that includes, but is not limited to, a summary of the event, a description of the methods used for leachate sampling, figures, tables, results, a narrative discussion, and a conclusion.

Check landfill weather station and rain collector for water and/or dust accumulation and clean as needed. Monitor software and data output, download data regularly and maintain files.

Groundwater Sampling
On an annual basis and in accordance with the CDM Smith's 2010 City of Albuquerque Cerro Colorado Groundwater Monitoring and System Plan, four monitor wells will be sampled and depth to ground water measured in each. Ensure laboratory data is sent to engineers on contract timely for NMED Solid Waste Bureau (SWB) annual reporting.

New Mexico Environment Department (NMED) Solid Waste Annual Reports
Perform quarterly inspections of all four solid waste facilities.
When Eagle Rock Convenience Center sump tank is full (two to four times/year), collect and submit wash water samples for total dissolved solids (TDS), chloride, volatile organic compounds (VOC) using EPA method 8260, semi-volatile organics using EPA method 8270C, and metals using EPA method 7060A or 6010B analyses by on call environmental laboratory. Compare the analytical results to the New Mexico Administrative Code (NMAC) 20.6.2.3103 groundwater standards and identify any analytes on the NMAC 20.6.2.7.T.2 toxic pollutants list that exceed groundwater standards and/or the toxic pollutants list. Determine if water is usable at CCLF for dust control and submit as part of the annual reports to NMED.

Purchasing Office Signature:

City of Albuquerque
Procurement Contract

INTERA INC
9000 GREAT HILL TRAIL STE 300W
AUSTIN TX 78759

Jones Joseph
505.246.1600 x1209
jjoseph@intera.com
pcaller@intera.com

Contract ID	**SHR000022780**
Contract Dates	**02/01/2023 - 01/31/2027**
Contract Reference	**RFB-2023-328-DSW-CC**
Contract Maximum	**60.00**
Contract Print Date	**01/19/2023**
Origin	**SWD**
Page	**13 of 16**

Supplier ID: 1000136272

Preparation and timely submission of Solid Waste and Scrap Tire Hauler Annual reports.
Assist with records compilation and provide support during any NMED SWB solid waste facility inspection.

Stormwater
Monthly inspections, reporting and revisions in accordance with the Multi-Sector General Permit (MSGP) and the Stormwater Pollution and Prevention Plans (SWPPP).

Field and/or Administrative Work
Data collection or compilation required to meet any regulatory commitment.

Department Contacts:
Stephanie Phillips 505-7618152 sphillips@cabq.gov
Daniele Berardelli 505-761-4326 dberardelli@cabq.gov

Alternate Intera Inc. Contact:
Joe Tracy jtracy@intera.com

Purchasing Office Signature:

City of Albuquerque
Procurement Contract

INTERA INC
9600 GREAT HILL TRAIL STE 300W
AUSTIN TX 78759

James Joseph
505.246.1600 x1200
jjoseph@intera.com
psalter@intera.com

Supplier ID: 0000136272

Contract ID	SHR000022790
Contract Dates	02/01/2023 - 01/31/2027
Contract Reference	RFB-2023-322-DSW-CG
Contract Maximum	$0.00
Contract Print Date	01/19/2023
Origin	SWD

Instructions to Supplier:

- Do not fill orders for goods/services not listed in this Procurement Contract.
- Orders against this Procurement Contract must be placed with a Purchase Order Release (POR).
- Do not fill orders without a POR.
- POR number must be on all invoices.

Please forward all original invoice(s) to:
City of Albuquerque
Accounting Division
PO Box 1985
Albuquerque, NM 87103

For information on invoicing and payments, please visit: https://www.cabq.gov/dfa/accounting/how-do-i-get-paid

Instructions to End-User:
Do Not place orders for goods/services not listed on this Procurement Contract.
To place an order against this Procurement Contract, issue a POR prior to placing the order with the Supplier.

Purchasing Office Signature:

CITY OF ALBUQUERQUE TERMS AND CONDITIONS

Direct all inquiries to: City of Albuquerque, Purchasing Division, P.O. Box 1293, Albuquerque, NM 87103 or call (505) 768-8888.

1. **Contract:** By commencing work, vendor accepts all Terms and Conditions herein and agrees that, to the extent vendor terms conflict, these Terms and Conditions shall govern. These Terms and Conditions and any non-conflicting vendor terms and conditions shall constitute the Contract.

2. **Invoicing:** Department name AND purchase order number MUST be on all invoices, packing slips, shipping notices, freight bills, and correspondence concerning the order. Send invoice original and duplicate to: Accounting, P.O. Box 1293, Albuquerque, NM 87103.

3. **Payment:** City's payment terms are net 30 days unless otherwise stated. City shall not pay late fees, finance fees, or collection fees. Any vendor that accepts payments by credit card on behalf of City must be Payment Card Industry Data Security Standard compliant.

4. **FOB Destination and Inspection:** The risk of loss, injury and destruction, and legal title to the goods remains with vendor until the goods reach the location of the City. All goods delivered are subject to inspection upon receipt by City. Department's count will be accepted by vendor as final and conclusive on all shipments not accompanied by a packing slip. All rejected goods shall remain the property of vendor and will be returned at vendor's expense.

5. **Taxes:** Vendor is responsible for determining whether taxes are applicable to the order and for payment of the tax. Applicable taxes are to be included in each invoice line and may not be billed more than sixty (60) days after providing the goods or services to which the taxes apply.

6. **Warranty:** Vendor warrants that the goods and services furnished shall (a) conform to the specifications; (b) be free from defects in materials and workmanship; (c) be suitable for the purpose intended; (d) be new and of most current production; (e) be free from security interests or liens; and (f) not infringe upon or violate any copyrights or patent rights.

7. **Insurance:** Vendor agrees to comply with its state's law pertaining to workers' compensation benefits for its employees. If vendor fails to comply with the applicable workers compensation law when required to do so, the Contract may be terminated by City. Vendor also agrees to procure and maintain the insurance in [redacted] and any additional insurance coverage requested by City.

8. **Default:** City reserves the right to cancel all or any part of the Contract without cost to the City if vendor fails to meet the provisions of the Contract and, except as otherwise provided herein, to hold Vendor liable for any excess cost incurred by City due to vendor default.

9. **Force Majeure:** Neither Vendor nor City shall be liable for failure to perform its obligations under the Contract due to causes beyond the control and without the fault or negligence of either party. Such causes include, but are not restricted to, acts of God or the public enemy, acts of the State or federal government, fire, flood, epidemics, quarantine restrictions, strikes, freight embargoes, unusually severe weather and defaults of subcontractors due to any of the above, unless City shall determine that the supplies or services to be furnished by the subcontractor were obtainable from other sources in sufficient time to permit vendor to meet the required delivery scheduled. The rights and remedies of the City provided in this paragraph shall not be exclusive and are in addition to any other rights now being provided by law or under the Contract.

10. **Termination for Lack of Appropriations:** Notwithstanding any provision in the Contract to the contrary, payments hereunder are contingent upon the Albuquerque City Council making the necessary appropriations. If sufficient appropriations are not made, the Contract may be terminated at the end of City's then current fiscal year upon written notice given by City to vendor. Such event shall not constitute an event of default and all payment obligations of City and all of its interest in the Contract will cease upon the date of termination. City's determination regarding appropriation shall be accepted by vendor and shall be final.

11. **Termination for Convenience:** City may terminate the Contract at any time by giving at least 30 days' written notice to the Vendor. In such event, vendor shall be paid under the terms of the Contract for all goods and/or services provided to and accepted by City, if ordered or accepted by City prior to the effective date of termination.

12. **Contract Changes:** In no case shall the Contract be changed without the prior written approval of City's Chief Procurement Officer.

13. **Assignment:** Neither the Contract, nor any interest therein, nor claim thereunder, shall be assigned or transferred by vendor, except as expressly authorized in writing by City's Chief Procurement Officer or designee. No such assignment or transfer shall relieve vendor from the obligations and liabilities under the Contract.

14. **City Furnished Property:** City furnished property shall be returned to City upon request in the same condition as received except for ordinary wear, tear, and modifications ordered hereunder.

15. **Indemnity:** Vendor agrees to defend, indemnify and hold harmless City from any and all claims, actions, suits or proceedings brought against City because of any injury or damage received or sustained by any person or property arising out of or resulting from the Contract or by reason of any asserted act or omission, neglect or misconduct of vendor or its agents or employees or any subcontractor or its agents or employees. This indemnity shall not be limited by reason of the specification of any particular insurance coverage in the Contract. City shall not indemnify vendor.

16. **Debarment, Suspension, Ineligibility and Exclusion Compliance:** Vendor certifies (a) that it has not been debarred, suspended or otherwise found ineligible to receive funds by any agency of the executive branch of the federal government, the State of New Mexico, any local public body of the State, or any state of the United States; and (b) should any notice of debarment, suspension, ineligibility or exclusion be received by vendor, vendor will notify City immediately.

17. **Conflict of Interest:** No officer, agent or employee of City will participate in any decision relating to the Contract which affects that person's financial interest, the financial interest of his or her spouse or minor child or the financial interest of any business in which he or she has a direct or indirect financial interest.

18. **Interest of Contractor:** Vendor agrees that it presently does not have, and shall acquire no direct or indirect interest which conflicts in any manner or degree with the performance of the terms of the Contract. Vendor will not employ any person who has any such conflict of interest to assist Vendor in performing the services.

19. **No Collusion:** Vendor represents that it has entered into the Contract without collusion on the part of Vendor with any person or firm, without fraud and in good faith. Vendor also represents that no gratuities, in the form of entertainment, gifts or otherwise, were, or during the term of the Contract, will be offered or given by vendor or any agent or representative of vendor to any officer or employee of the City with a view towards securing the Contract or for securing more favorable treatment with respect to making any determinations with respect to performing the Contract.

20. **Audits and Inspections:** At any time during normal business hours and as often as City may deem necessary, there shall be made available to City for examination all of vendor's records with respect to all matters covered by the Contract. Vendor shall permit City to audit, examine, and make excerpts or transcripts from such records, and to make audits of all contracts, invoices, materials, payrolls, records of personnel, conditions of employment and other data relating to all matters covered by the Contract. Vendor understands and will comply with City's Accountability in Government Ordinance, §2-10-1 et seq., and Inspector General Ordinance, §2-17-1 et seq. R.O.A. 1994, and also agrees to provide requested information and records and appear as a witness in hearings for City's Board of Ethics and Campaign Practices pursuant to Article XII, Section II of the Albuquerque City Charter.

21. **Compliance With Ethics Provisions:** Vendor certifies that it has not, either directly or indirectly, entered into action in restraint of free competitive bidding and is in compliance with the Ethical Conduct provisions of City's Public Purchases Ordinance, §-5-62 R.O.A. 1994.

22. **Non-discrimination:** In performing the Contract, vendor shall comply with the Federal Civil Rights Act of 1964 and Title VII of the Act and the Americans with Disabilities Act of 1990.

23. **Compliance With Laws:** In performing the Contract vendor shall comply with all applicable laws, ordinances and codes of the federal, state and local governments.

24. **Governing Law:** The Contract is governed by the laws of the State of New Mexico and the City of Albuquerque. The venue for actions arising out of the Contract is Bernalillo County, New Mexico.

25. **Federal Funding:** Procurements involving the expenditure of federal funds may be subject to mandatory applicable federal law and regulations.

Version Date: August 2019

City of Albuquerque
Procurement Contract

INTERA INC
9600 GREAT HILL TRAIL STE 300W
AUSTIN TX 78759

Jessica Joseph
512.246.1600 x1209
jjoseph@intera.com
psaller@intera.com

Supplier ID: 0000138272

Contract ID	3000022790
Contract Dates	02/01/2023 - 01/31/2027
Contract Reference	RFB-2022-332-DSW-CG
Contract Maximum	$0.00
Contract Print Date	01/19/2023
Origin	SWD

Description: GHG and LFG Operations

ITEM #	ITEM DESCRIPTION	Category	QTY	UOM	UNIT PRICE
1	GHG Emissions NMED Methane Monitoring Project Manager $117.50 hourly Engineer $222.00 hourly Technician $126.00 hourly	98846	-	EA	0.00
2	GHG Emissions GHG Monitoring and Reporting Engineer $222.00 hourly	98846	-	EA	0.00
3	GCCS Monthly Monitoring Project Manager $117.50 hourly Engineer $222.00 hourly Technician $126.00 hourly	98846	-	EA	0.00
4	GCCS Quarterly Monitoring Project Manager $117.50 hourly Engineer $220.00 hourly Technician $126.00 hourly	98846	-	EA	0.00
5	GCCS Operations Monthly Balancing Project Manager $117.50 Engineer $222.00 Technician $126.00	98846	-	EA	0.00
6	GCCS Monthly Maintenance Project Manager $222.00 Technician $126.00	98846	-	EA	0.00
7	GCCS Quarterly Maintenance Project Manager $222.00 Technician $126.00	98846	-	EA	0.00
8	GCCS Monthly Reporting Project Manager $222.00	98846	-	EA	0.00
9	GCCS Quarterly Reporting Project Manager $222.00	98846	-	EA	0.00
10	GCCS Air Quality Semi-Annual Reporting Project Manager $222.00	98846	-	EA	0.00
11	GCCS Air Quality Annual Reporting Project Manager $222.00	98846	-	EA	0.00
12	GCCS Flare Performance Test in accordance with Authority to Construct and Title V Permit Project Manager $222.00 Engineer $222.00 Technician $126.00	98846	-	EA	0.00

Purchasing Office Signature:

Lee Bradley

City of Albuquerque
Procurement Contract

INTERA INC
9600 GREAT HILL TRAIL STE 300W
AUSTIN TX 78759

James Joseph
505.246.1600 x1269
jjoseph@intera.com
psalter@intera.com

Supplier ID: 0000136272

Contract ID	SHR000022700
Contract Dates	02/01/2023 - 01/31/2027
Contract Reference	RFB-2022-322-DSW-CC
Contract Maximum	$0.00
Contract Print Date	01/11/2023
Origin	SWD
Page 2 of 15	

13	GCCS Typical Repairs- Relocation of Temperature Probe on Flare Stack Project Manager $117.50 Engineer $222.00 Technician $126.00	98846	-	EA	0.00
14	GCCS Typical Repairs- Remove, Calibrate, Re-Install FCI ST-98-21CTO Flow Meter (or equivalent) (once per 18 months) Project Manager $117.50 Engineer $222.00 Technician $126.00	98846	-	EA	0.00
15	GCCS Typical Repairs- Remove and Send for Re-building (1) 40 HP Houston Service Industries 08103 Blower (or equivalent), Re-Install with New Belts Project Manager $222.00 Technician $126.00	98846	-	EA	0.00
16	GCCS Typical Repairs- Remove Old and Install New UV Flame Detector C7035A1031 (or equivalent) and/or Sensor Project Manager $125.00 Engineer $222.00 Technician $126.00	98846	-	EA	0.00
17	GCCS Typical Repairs- Remove, send for Rewinding, Re-Install (1) WEG Blower Motor Model 0436EP3E324TS 40HD (or equivalent) Project Manager $222.00 Engineer $222.00 Technician $126.00	98846	-	EA	0.00
18	GCCS Typical Repairs- Well Extension Project Manager $117.50 Engineer $222.00 Technician $126.00	98846	-	EA	0.00
19	GCCS *Emergency Response and Reporting - Regular Business Hours Project Manager $150.00 Engineer $236.01 Technician $133.97	98846	-	EA	0.00
20	GCCS *Emergency Response and Reporting - After Hours Project Manager $160.00 Engineer $236.01 Technician $133.97	98846	-	EA	0.00

Purchasing Office Signature:

City of Albuquerque
Procurement Contract

INTERA INC
9600 GREAT HILL TRAIL STE 300W
AUSTIN TX 78759

James Joseph
512.246.1600 x1209
jjoseph@intera.com
paalter@intera.com

Contract ID	8HR000022790
Contract Dates	02/01/2023 - 01/31/2027
Contract Reference	RFB-2022-322-DSW-CG
Contract Maximum	$0.00
Contract Print Date	01/19/2023
Origin	SWD
Page 3 of 15	

Supplier ID: 0000136272

21	GCCS *Miscellaneous Tasks, Reporting and Meetings and/or Required Regulatory Follow Up Project Manager $150.00 Engineer $239.21 Technician $135.77	99846	-	EA	0.00
22	LFG Transmission Pipeline Routine Operation and Maintenance Project Manager $117.50 Engineer $222.00 Technician $126.00	99846	-	EA	0.00
23	LFG Transmission Pipeline Pipeline Patrolling/Leak Detection Surveys biannual patrolling annual leak detection Project Manager $222.00 Technician $126.00	99846	-	EA	0.00
24	LFG Transmission Pipeline Annual Reporting to the United States (US) Department of Transportation (DOT) Annual DOT/PSB Reporting Project Manager $222.00 Engineer $222.00	99846	-	EA	0.00
25	LFG Transmission Pipeline Annual Operations Review, Plan Updates, Training Pipeline Plan Review and Updates Project Manager $117.50 Engineer $222.00 Technician $126.00	99846	-	EA	0.00
26	LFG Transmission Pipeline Operator Training, Evaluation, Qualification Project Manager $117.50 Engineer $222.00 Technician $126.00	99846	-	EA	0.00
27	LFG Transmission Pipeline Pipeline Cleaning/Pigging in accordance with manual includes shut down, purging, pigging and start up Project Manager $117.50 Engineer $222.00 Technician $126.00	99846	-	EA	0.00
28	LFG Transmission Pipeline Abnormal Condition Response as defined by NMPRC Project Manager $124.92 Engineer $235.01 Technician $133.95	99846	-	EA	0.00

Purchasing Office Signature:

City of Albuquerque
Procurement Contract

INTERA INC
9600 GREAT HILL TRAIL STE 300W
AUSTIN TX 78759

James Joseph
505.246.1600 x1209
jjoseph@intera.com
psalter@intera.com

Contract ID	**SHR000022780**
Contract Dates	**02/01/2023 - 01/31/2027**
Contract Reference	**RFB-2022-322-DSW-CG**
Contract [illegible]	**$0.00**
Contract Print Date	**01/19/2023**
Origin	**SWD**
Page 4 of 15	

Supplier ID: 0000136272

29	LFG Transmission Pipeline *Emergency Response and Reporting - Regular and After Business Hours Project Manager $124.92 Engineer $236.01 Technician $133.95	98846	-	EA	0.00
30	LFG Transmission Pipeline *Miscellaneous Tasks, Reporting and Meetings and/or Required Regulatory Follow Up Project Manager $126.61 Engineer $239.21 Technician $135.77	98846	-	EA	0.00
31	Non Labor Expenses for all tasks	98846	-	EA	0.00

Title: Greenhouse Gas (GHG) and Landfill Gas (LFG) Operations, Maintenance and Monitoring at the Albuquerque Cerro Colorado Landfill (CCFL)

Term: 02/01/2023 - 01/31/2027

The City of Albuquerque shall enter into a contract for Greenhouse Gas (GHG) Emissions Monitoring and Reporting; Landfill Gas (LFG) Collection and Control System (GCCS) Operations, Maintenance, Monitoring, Reporting, Performance Tests, Repair and Emergency Response; LFG Transmission Pipeline Operations, Maintenance, Monitoring, Testing, Reporting, Plan Review, Updates, Training, Pigging, Repair and Emergency Response; Leachate Management Monitoring, Maintenance and Reporting, and Ground Water Sampling at the City of Albuquerque Cerro Colorado Landfill (CCFL); - in accordance with the terms, conditions, and specifications set forth herein.

Non-Labor Expenses shall be allowed and applied for each group of tasks at cost.

Anytime parts or materials must be purchased or equipment rented, repaired or replaced, or subcontractors must be hired, contractor will bill City at cost.

This contract is subject to the Code of Federal Regulations. To view the Code of Federal Regulations, go to: www.ecfr.gov

Intera Inc. shall provide services required for:
- Greenhouse Gas (GHG) Emissions - Monitoring and Reporting.
- Landfill Gas (LFG) Collection and Control System (GCCS) - Operation, maintenance, monitoring, reporting, performance testing, repair and emergency response for the LFG GCCS to include the landfill open flare and all attached equipment.
- Landfill Gas (LFG) Transmission Pipeline - Operation, maintenance, monitoring, testing, reporting, plan review, updates, training, pigging, repair and emergency response for the LFG Transmission Pipeline.

Purchasing Office Signature:

City of Albuquerque
Procurement Contract

INTERA INC
9600 GREAT HILL TRAIL STE 300W
AUSTIN TX 78759

James Joseph
505.246.1600 x1209
jjoseph@intera.com
pcollier@intera.com

Supplier ID: 0000136272

Contract ID	SHR0000022795
Contract Dates	02/01/2023 - 01/31/2027
Contract Reference	RFP-2022-522-DSW-CS
Contract Maximum	$0.00
Contract Print Date	01/19/2023
Origin	SWD
Page 5 of 15	

Intera Inc shall perform all required monitoring and reporting necessary to prevent any non-compliance with applicable federal, state, and local regulations or pose a health or safety threat to the public or staff. Applicable federal regulations shall specifically include the requirements specified under 40 CFR Parts 60, 62 and 98 and 49 CFR 191 and 192.

GREENHOUSE GAS (GHG) EMISSIONS MONITORING AND REPORTING
The CCLF is subject to the provisions in 40 CFR 98 Subpart HH - "Mandatory Reporting of GHG for Municipal Solid Waste Landfills". The CCLF currently operates under a GHG Monitoring Plan written and submitted March 31, 2010, to demonstrate compliance with 40 CFR 98.3(g) (5). In addition to the landfill emissions, the plan identifies several stationary sources at the CCLF that require reporting under 40 CFR 98, including, but not necessarily limited to, the flare station pilot, propane heaters at the landfill office trailers and the heavy equipment shop. Annual fuel usage at these identified sources is recorded and maintained for use in calculating annual GHG Emissions for each combustion source. Per 40 CFR 98.30, none of these sources fall under the current combustion source reporting requirements (flares are categorically exempted and portable sources are not required to report).

Intera Inc shall be responsible for:
Quarterly methane monitoring using borehole probes in accordance with the Cerro Colorado Landfill's New Mexico Environment Department (NMED) approved Landfill Gas Monitoring Plan (Permit # SWM-010221, SWM-010221(SP), Volume II B, Section 6). In general, monitoring involves measuring methane levels from twelve (12) points along active cell perimeters and within six (6) structures located on landfill property using an appropriate portable gas analyzer.

All monitoring and reporting as outlined in the facility GHG Monitoring Plan and in accordance with any updates in protocols or procedures pursuant to 40 CFR 98 Subpart HH. Calculations of modeled methane generation will include:

Modeled methane generation (98.343(a)). Quantities of methane recovered for destruction (98.343(b)). Calculated methane emissions including flare destruction (98.343(c). Calculated carbon dioxide, methane, and nitrous oxide emissions for general stationary fuel combustion sources (98.33(a) (1). (c) (1). Quality assurance of GEM 2000 (or equivalent) in accordance with 98.344(b) (5) (ii)-Annual Calibration for NMOC. Quality assurance of the Open Flare via one of the methods listed 40 CFR 98.344(b)

The issuance and quality assurance of all reports issued directly to EPA under the provisions of 40 CFR 98 Subpart HH. All reporting, both emissions and quality assurance, shall comply with the specific requirements of the EPA Region governing GHG Monitoring, and shall comply with the written GHG site specific Monitoring Plan. Two (2) hard copies and electronic versions of all reports shall be provided to the CCLF upon issuance to EPA. The annual GHG data is required to be submitted directly into the EPA eGRT (electronic Greenhouse Gas Reporting Tool). Coordination with the SWMD eGRT signatory authority is required to electronically sign and submit the report.

Purchasing Office Signature:

City of Albuquerque
Procurement Contract

INTERA INC
9600 GREAT HILL TRAIL STE 300W
AUSTIN TX 78759

James Joseph
505.246.1600 x1209
jjoseph@intera.com
pseiler@intera.com

Supplier ID: 0000136272

Contract ID	SHR0000022790
Contract Date	02/01/2023 - 01/31/2027
Contract Reference	RFB-2022-322-DSW-CC
Contract Maximum	$0.00
Contract Print Date	01/19/2023
Origin	SWD

LFG COLLECTION AND CONTROL SYSTEM (GCCS)

Detailed Description

At this time, the GCCS at the CCFL consists of 58 vertical extraction wells 5 horizontal collectors and 6 leachate risers.
The landfill flare station currently in use is an LFG Specialties model PCF103018, equipped with a knock off pot, actuator valve, two (2) 40 hp. blowers with adjusting butterfly valves, flow meter, Varec flame arrestor, pilot gas system, flare stack, and a Flame Trol III control center.

Expansion of the system may be necessary dependent upon emissions and applicable Air Quality regulations. A contingency has been developed and involves three (3) horizontal collectors, each approximately 1,000 feet long.

GCCS Monitoring

The Intera Inc. shall provide the required instrumentation (Gastech or Landtec GEM 5000 or equivalent) for ongoing gas analysis and data collection of the LFG system at the CCLF.

GCCS Monthly Monitoring:

As per 40 CFR Part 60 once each month the LFG collection wells shall be monitored for methane, oxygen, carbon dioxide, temperature and flow rate and shall be balanced. Appropriate adjustments shall be made and wells requiring correction shall be re-monitored as necessary to facilitate system compliance and assure adequate overall performance of the system, as outlined under 40 CFR Part 60. Visual determination of fugitive emissions from the flare shall be monitored monthly using EPA's Method 22. At the same time, record equipment hours and usage for emission units listed in Section 2, Tables 4 and 5 of Title V Permit # 0537-M1-RN1 as applicable.

GCCS Quarterly Monitoring:

(Once every three (3) months): Surface and cover penetration monitoring of the applicable portions of the CCFL shall be accomplished using either a flame ionization detector or a photo ionization detector as specified under 40 CFR 60. Areas of elevated readings shall be recorded and appropriate reporting and remediation implemented in shall order to assure ongoing compliance with any federal, state, or local regulations or established conditions. The surface emissions monitoring shall be conducted along a design pattern that traverses the landfill surface along 30 meter intervals, but only in those areas with waste in place that is more than (5) years in age.

GCCS Operation

Monthly: At least once every 30 days adjustments must be made to the flow rate at each of the LFG extraction wells based on the information obtained during monitoring of the individual wells and at the flare station itself. Adjustments shall ensure that LFG will be collected at a rate that maintains a negative gauge pressure vacuum at all wellheads without an increase in oxygen, per 40 CFR 60.751. As specified in the federal regulations, the parameters of concern are LFG composition, LFG pressure and/or vacuum, wellhead temperature, and flow velocity. Adjustments to the vacuum and subsequent flow rate at the flare station are also required in order to maintain correct balance with the extraction system.

The primary purpose of the extraction

Purchasing Office Signature:

INTERA INC
9600 GREAT HILL TRAIL STE 300W
AUSTIN TX 78759

James Joseph
505.246.1600 x1200
jjoseph@intera.com
pmiller@intera.com

Contract ID	SHR0000022780
Contract Dates	02/01/2023 - 01/31/2027
Contract Reference	RFB-2022-322-DSW-CC
Contract Maximum	$0.00
Contract Print Date	01/19/2023
Origin	SWD
Page 7 of 15	

Supplier ID: 0000135272

monitoring and balancing is to minimize landfill surface, cover penetration emissions, and control the possible off-site migration of LFG in order to maintain regulatory compliance. All additional adjustments required to meet the requirements outlined in the applicable CFR's must be completed in a timely fashion and must demonstrate compliance with the applicable regulations. The awarded offeror must have experience with the new provisions and the 5/15 day rules as established under the revised and updated CFR.
GCCS Maintenance

Monthly: Intera Inc. shall conduct visible inspection of all system components, to include wellheads, exposed lines, valves and port connections, and the flare system itself. Any problems noted should be immediately reported to the appropriate landfill staff, along with recommendations for repair and/or any problems noted should be immediately reported to the appropriate landfill staff, along with recommendations for repair and/or repair and replacement as needed. The contractor shall insure the proper operation of the Flame Trol II Control Center and all other flare components. Contractor shall change the flare chart recorder paper a minimum of four (4) times per month and lubricate the bearings on each of the blowers twice per week, or eight (8) times per month using only the manufacturers recommended lubricant. NOTE: The Landfill POC information will be provided at the time of award.

Quarterly: The Intera Inc. shall be responsible for the following:
Monitoring the pressure drop across the mist extraction pad at maximum LFG flow, and clean the pad when the pressure drop has increased to twice the normal pressure drop for the clean pad condition.

Insure proper operation of the pneumatic valve actuator. Lubricate actuator and valve mechanism per manufacturer's recommendations.

Start the non-operating blower monthly to prevent motor or bearing freeze up.

Inspect the operational blower, listening for unusual noises and feeling for abnormal vibrations or excessive heat.

Ensure bearings on each of the blowers are lubricated as mentioned above, using only the manufacturers recommended lubricant.

Check the pressure drop across the flame arrester. If the pressure drop exceeds two (2) inches of water column at maximum LFG flow, then the flame arrester must be cleaned according to manufacturer's recommendations.

Insure the proper operation of the propane fuel pilot ignition system, including removal and replacement of empty propane tanks, as needed.

Inspect the condition of the UV Flame detector and replace the detector if damaged or not properly functioning.

Adjust the burner tip orifice to stabilize flare operation, as required. Confirm the calibration of the thermal flow

Purchasing Office Signature:

INTERA INC
9600 GREAT HILL TRAIL STE 300W
AUSTIN TX 78759

James Joseph
[redacted].1600 x1209
jjoseph@intera.com
pcalfer@intera.com

Supplier ID: 0000136272

Contract ID	SHR0000022799
Contract Dates	02/01/2023 - 01/31/2027
Contract Reference	RFB-2022-322-DSW-CO
Contract Maximum	$0.00
Contract Print Date	01/19/2023
Origin	SWD
Page 8 of 16	

sensor, using an independent Pitot tube. Inspect the control panel and test indicator lights for proper operation, and replace bulbs as required.

GCCS Reporting
All reporting shall conform to the requirements established under 40 CFR Part 63.
Monthly Reporting: The Intera Inc. shall prepare a detailed report for the City of Albuquerque Solid Waste Management Department (SWMD) containing the emissions data collected during the previous month, and a summary of the activity performed during the previous month. Two (2) hard copies of the report and an electronic version shall be provided to the SWMD, and the information maintained on a contractor database in order to appropriately track any long term trends in the LFG collection system that would justify future operation modifications or additions. An ongoing log should be maintained of each inspection and site visit, with details of any deficiencies discovered and actions taken to remedy the problems.

Quarterly Reporting: The Intera Inc. shall prepare a detailed report for the SWMD containing the data collected during the required surface and cover penetration monitoring, to include instrument calibration and a monitoring log, along with appropriate weather data and other information, as required. The report shall include all maintenance done during the previous quarters, including checks of all the system components. Two (2) hard copies of each of these reports and an electronic version shall be provided to the SWMD, and the information maintained on a contractor held database in order to appropriately track any long term trends in the surface monitoring and/or repairs and maintenance.

Air Quality Semi-Annual Reporting: Prepare and submit emission unit reports and the Certified Compliance Progress Report semi-annually in accordance with Albuquerque/Bernalillo County Air Quality Control Board Title V Operating Permit #0537-M1-RN1 .

Air Quality Annual Reporting: Prepare and submit the Annual Compliance Certification and Emissions Inventory Report in accordance with Albuquerque/Bernalillo County Air Quality Control Board Title V Operating Permit #0537-M1-RN1 and the EPA Air Quality Regulations.

Performance Tests
Flare Performance Test: Within 365 days of the previous flare performance test, Bidder shall, on an annual basis, conduct a flare performance test in accordance with the Authority to Construct and Title V Permit Operating Permit #0537-M1-RN1 . Task includes submission of the protocol, required notification as prescribed, and report preparation and timely submission to the governing authority/ies. Two (2) hard copies of this report and an electronic version shall be provided to the SWMD, and the information maintained on a contractor held database in order to appropriately track any long term trends in the flare performance.

GCCS Typical Repairs
- Relocation of Temperature Probe on Flare Stack
- Remove, calibrate, and re-install (once per 18 months) an FCI ST-98-21 CTO flow meter (or equivalent)
- Remove and send for re-building one (1) 40 HP Houston

Purchasing Office Signature:

Lee Bradley

INTERA INC
9600 GREAT HILL TRAIL STE 300W
AUSTIN TX 78759

James Joseph
605.348.1600 x1209
jjoseph@intera.com
psafier@intera.com

Supplier ID: 0000136272

Contract ID	SHR00022700
Contract Dates	02/01/2023 - 01/31/2027
Contract Reference	RFB-2022-322-DSW-CG
Contract Maximum	$0.00
Contract Print Date	01/18/2023
Origin	SWD
Page 9 of 15	

- Service Industries 06105 Blower (or equivalent), re-install with new belts
- Remove old and install new UV Flame Detector C7035A1031 (or equivalent) and/or sensor
- Remove, send for re-winding, re-install one (1) WEG blower motor Model 436EP3E324TS 40HP (or equivalent)
- GSSC well extension, assume electrofusion welding

Emergency Response, Reporting and Corrective Action
The Intera Inc. shall be able to respond within a 24-hour time frame to address any issues and/or repairs to the GCCS and flare and associated reporting requirements. This includes trouble shooting or corrective action required on any part of the systems to be maintained as listed under Part b- 3, Section B. A contact list shall be provided at the time of the award, with appropriate phone numbers in order for landfill staff to call for assistance, as needed.

Miscellaneous Tasks, Reporting, And Meetings

Gas Control and Collection Systems are highly regulated and typically develop needs that have not been anticipated during the planning and construction process. To address unanticipated needs, this task was developed to ensure a mechanism is in place for Bidder to assist with, but not be limited to, miscellaneous meetings, the development of reports or additional plans, responses to expansions or changes in regulatory conditions.

The bidder shall submit an hourly billing rate for any technicians or engineer's time that the contractor feels might be necessary to facilitate trouble shooting, corrective action to include required repairs, and associated reporting for any portion of the GCCS.

LFG TRANSMISSION PIPELINE

The LFG Transmission Pipeline is approximately two (2) miles long and is used to convey treated LFG treated from the CCLF to the Metropolitan Detention Center (MDC) where it is used as a fuel source to fire boilers providing hot water and comfort heat.

Routine Operation and Maintenance (O&M):
Routine O&M includes primarily the infrastructure at the compression skid. It includes weekly site visits to confirm proper operation and check for "abnormal conditions". Routine O&M is assumed to include the following activities.
- Weekly site visits to the compression skid to review and record systems parameters, bi-weekly visits to grease components
- Cleaning/changing the filters on the condensate knock out vessels
- Adding and/or changing the glycol coolant
- Lean y-strainers
- Change oil (every three months)
- Check belt tension and replace belts as needed.
- Maintain standing water in dip trap
- Calibrate flow meters

Purchasing Office Signature:

Lee Bradley

INTERA INC
9600 GREAT HILL TRAIL STE 300W
AUSTIN TX 78759

James Joseph
505.246.1600 x1209
jjoseph@intera.com
psalter@intera.com

Supplier ID: 0000136272

Contract ID	SHR00[illegible]2750
Contract Dates	02/01/2023 - 01/31/2027
Contract Reference	RFB-2022-329-DSW-CG
Contract Maximum	$0.00
Contract Print Date	01/[illegible]/2023
Origin	SWMD
Page 10 of 15	

- Clean air filters
- Download electronic chart recorder data and transmit it to the SWMD.
- Measure and document LFG quality with LFG analyzer
- Confirm proper interlocks with LFG flare skid
- Confirm proper functioning of alarm interlock
- Inspect steel piping (every three years) and complete report form
- Check cathodic protection system (annually) and complete report form
- Evaluate odorization of LFG and complete report form
- Pressure relief valve inspection and testing (annually) and complete report form
- Valve inspections and testing (annually) and complete report form
- Driving inspection of the pipeline route to check surface conditions, check for exposed sections of buried pipe, and confirm that pipe markers are in place and in good condition (every two weeks)
- Provide manufacturer support of the compression skid, as needed

The deliverable to the SWMD for this task shall be completion of the above specified items and conveyance of recorded/downloaded data and report forms on a monthly basis.

Pipeline Patrolling and Leak Detection Surveys

Pipeline patrolling and leak detection surveys will be performed as specified in sections 2.5 (49 CFR 192.614) and 3.2 of the O&M manual. The manual calls for biannual pipeline patrolling and annual leak detection surveys. The Bidder will walk the pipeline route during these events and complete the report form(s). Inspections will include listening for leaks, looking for subsidence, stressed vegetation, rilling/erosion, exposed pipeline, evidence of heavy traffic in areas other than identified in the O&M manual, and the detection of LFG (during the leak detection survey). The leak detection survey will be conducted with a flame ionization detector (FID) designed to meet the sensitivity requirements of the regulations. The FID will be calibrated in the field before each use. More frequent driving inspections of the pipeline are to be performed under the Routine O&M task above.

Annual Reporting to the United States (US) Department of Transportation (DOT)

An annual report must be submitted to the US DOT on or before March 15th each year. The report must be prepared using the DOT's form no. PHMSA 7100.2-1. On behalf of the SWMD, Bidder will complete the report form and transmit it electronically to the SWMD for review, and for submission, must coordinate with SWMD Point of Contact (POC) for the City's Executive electronic signature.

Annual Operations Review, Plan Updates, And Training

This task includes the review of the O&M, Emergency Response, Integrity Management, Public Awareness and Operator Qualification Plans and amendments as needed to address changing conditions, changes in regulation and/or necessary improvements. Bidder will provide annual training to qualify, requalify and evaluate operators in accordance with the Operator Qualification Plan. Most of the re-qualifications are on two-year cycles, however, an annual budget should be planned to allow for regular evaluations of qualified

Purchasing Office Signature:

INTERA INC
9600 GREAT HILL TRAIL STE 300W
AUSTIN TX 78759

James Joseph
605.246.1600 x1209
jjoseph@intera.com
psalter@intera.com

Supplier ID: 0000136272

Contract ID	SHR000022760
Contract Dates	02/01/2023 - 01/31/2027
Contract Reference	RFB-2022-322-DSW-CG
Contract Maximum	$0.00
Contract Print Date	01/19/2023
Origin	SWS
Page 11 of 15	

operators and training of new staff (as required). Bidder shall include costs associated with the development and implemantation of the drug testing for select Bidder employees as required by US DOT. Bidder shall also provide Public Awareness notices as required by the Public Awareness Plan.

Pipeline Cleaning

The 12-inch-high density polyethylene (HDPE) LFG transmission pipeline is constructed with pigging stations for the periodic cleaning of the pipeline. This task is designated "as needed". It is anticipated that the pipeline will not require cleaning more than twice during the term of this contract. Cleaning of the pipeline will be in accordance with the O&M manual and will include:

- Shutdown of the compression skid and pipeline (section 2.2.5 of the O&M manual).
- Purging of the pipeline in accordance with Appendix D of the O&M manual.
- Pigging of the line with a polyurethane pig.
- Start up and system monitoring to ensure proper operation.

Abnormal Condition Response

The pipeline and compression skid are designed to operate within normal specified ranges. When the system operates outside of these ranges, an "abnormal condition" is identified. The O&M manual identifies a list of abnormal conditions including:

- Low suction pressure at the LFG conditioning skid
- Low discharge pressure at the LFG conditioning skid.
- High discharge pressure at the LFG conditioning skid.
- Low inlet pressure at the MDC.
- High oxygen content.
- High LFG condition skid knockout pot level.
- Fire alarm at MDC.
- Methane alarm at MDC.

Identification of these conditions or notification by the MDC or SWMD of existing conditions at the MDC end of the pipeline will trigger a response as prescribed in the O&M manual. Bidder will identify and correct the condition within the scope of the contract. Once the condition has been corrected, the system will be checked daily for 5 days in accordance with 40 CFR 192.605. Intera Inc. will complete report forms and evaluation of operation as needed to develop a budget for this task, Bidder will assume one abnormal condition event each year.

Emergency Response and Reporting

This task pertains to conditions that are more extreme than or not included in the Abnormal Conditions identified above. An emergency response would be triggered by the detection of a leak, damage to the pipeline, or damage to any other portion of the infrastructure that could result in the need of an immediate

Purchasing Office Signature:

INTERA INC
9600 GREAT HILL TRAIL STE 300W
AUSTIN TX 78759

James Joseph
505.246.1600 x1209
jjoseph@intera.com
pcalter@intera.com

Supplier ID: 0000126272

Contract ID	SHR0000022700
Contract Dates	02/01/2023 - 01/31/2027
Contract Reference	RFB-2022-322-DSW-CG
Contract Maximum	$0.00
Contract Print Date	01/[illegible]/2023
Origin	SWD
Page 12 of 16	

reaction to protect the safety of the public or SWMD personnel and contractors. The task also includes the completion of a US DOT Incident report form for the SWMD to submit electronically to the US DOT.

Miscellaneous Tasks, Reporting, And Meetings

Gas transmission lines are highly regulated and typically develop needs that have not been anticipated during the planning and construction process. To address unanticipated needs, this task was developed to ensure a mechanism is in place for Bidder to assist with, but not be limited to, miscellaneous meetings, the development of reports or additional plans, responses to expansions or changes in regulatory conditions, and issues regarding delivery to the MDC.

INTERA INC. MAY BE TASKED WITH ADDITIONAL RESPONSIBILITIES ON A TIME AND MATERIAL BASIS:

Leachate Management
In accordance with the Cerro Colorado Landfill's New Mexico Environment Department (NMED) approved Leachate Management Plan (Permit # SWM-010221, SWM-010221(SP), Volume II B, Section 7), inspect leachate pond, manholes and pumps monthly. Monitor leachate production, measure and record volume and flow rates quarterly. Collect leachate samples annually. Prepare quarterly reports for submission to NMED that summarize flow rates and the volume of leachate pumped, disposal methods and disposal locations. Prepare also for submission to NMED an annual report of the sampling event that includes, but is not limited to, a summary of the event, a description of the methods used for leachate sampling, figures, tables, results, a narrative discussion, and a conclusion.

Check landfill weather station and rain collector for water and/or dust accumulation and clean as needed. Monitor software and data output, download data regularly and maintain files.

Groundwater Sampling
On an annual basis and in accordance with the CDM Smith's 2010 City of Albuquerque Cerro Colorado Groundwater Monitoring and System Plan, four monitor wells will be sampled and depth to ground water measured in each. Ensure laboratory data is sent to engineers on contract timely for NMED Solid Waste Bureau (SWB) annual reporting.

New Mexico Environment Department (NMED) Solid Waste Annual Reports
Perform quarterly inspections of all four solid waste facilities.
When Eagle Rock Convenience Center sump tank is full (two to four times/year), collect and submit wash water samples for total dissolved solids (TDS), chloride, volatile organic compounds (VOC) using EPA method 8260, semi-volatile organics using EPA method 8270C, and metals using EPA method 7000A or 6010B analyses by on call environmental laboratory. Compare the analytical results to the New Mexico Administrative Code (NMAC) 20.6.2.3103 groundwater standards and identify any analytes on the NMAC 20.6.2.7.T.2 toxic pollutants list that exceed groundwater standards and/or the toxic pollutants list. Determine if water is usable at CCLF for dust control and submit as part of the annual reports to NMED.

Purchasing Office Signature:

INTERA INC
9600 GREAT HILL TRAIL STE 300W
AUSTIN TX 78759

James Joseph
505.246.1600 x1209
jjoseph@intera.com
pcallen@intera.com

Supplier ID: 0000136272

Contract ID	SHR0300227SO
Contract Dates	02/01/2022 - 01/31/2027
Contract Reference	RFB-2022-322-DSW-CG
Contract Maximum	$5.00
Contract Print Date	01/19/2023
Origin	SHD
Page 13 of 15	

Preparation and timely submission of Solid Waste and Scrap Tire Hauler Annual reports.
Assist with records compilation and provide support during any NMED SWB solid waste facility inspection.

Stormwater
Monthly inspections, reporting and revisions in accordance with the Multi-Sector General Permit (MSGP) and the Stormwater Pollution and Prevention Plans (SWPPP).

Field and/or Administrative Work
Data collection or compilation required to meet any regulatory commitment.

Department Contacts:
Stephanie Phillips 505-7618152 sphillips@cabq.gov
Daniele Berardelli 505-761-8326 dberardelli@cabq.gov

Alternate Intera Inc. Contact:
Joe Tracy jtracy@intera.com

Purchasing Office Signature:

Lee Bradley

City of Albuquerque
Procurement Contract

Contract ID	3000022780
Contract Dates	02/01/2022 - 01/31/2027
Contract Reference	RFB-2022-322-09W-CC
Contract Maximum	$0.00
Contract Print Date	01/18/2022
Origin	SWD
Page 14 of 15	

INTERA INC
9600 GREAT HILL TRAIL STE 300W
AUSTIN TX 78759

James Joseph
505.246.1600 x1209
jjoseph@intera.com
pcaller@intera.com

Supplier ID: 0000136272

Instructions to Supplier:

- Do not fill orders for goods/services not listed in this Procurement Contract.
- Orders against this Procurement Contract must be placed with a Purchase Order Release (POR).
- Do not fill orders without a POR.
- POR number must be on all invoices.

Please forward all original invoice(s) to:
City of Albuquerque
Accounting Division
PO Box 1985
Albuquerque, NM 87103

For information on invoicing and payments, please visit: https://www.cabq.gov/dfa/accounting/how-do-i-get-paid

Instructions to End-User:
Do Not place orders for goods/services not listed on this Procurement Contract.
To place an order against this Procurement Contract, issue a POR prior to placing the order with the Supplier.

Purchasing Office Signature:

CITY OF ALBUQUERQUE TERMS AND CONDITIONS

Direct all inquiries to: City of Albuquerque, Purchasing Division, P.O. Box 1293, Albuquerque, NM 87103 or call (505) 768-3320.

1. **Contract:** By commencing work, vendor accepts all Terms and Conditions herein and agrees that, to the extent vendor terms conflict, these Terms and Conditions shall govern. These Terms and Conditions and any non-conflicting vendor terms and conditions shall constitute the Contract.

2. **Invoicing:** Department name AND purchase order number MUST be on all invoices, packing slips, shipping notices, freight bills, and correspondence concerning the order. Send invoices original and duplicate to: Accounting, P.O. Box 1293, Albuquerque, NM 87103.

3. **Payment:** City's payment terms are net 30 days unless otherwise stated. City shall not pay late fees, finance fees, or collection fees. Any vendor that accepts payments by credit card on behalf of City must be Payment Card Industry Data Security Standard compliant.

4. **FOB Destination and Inspection:** The risk of loss, injury and destruction, and legal title to the goods remains with vendor until the goods reach the location of the City. All goods delivered are subject to inspection upon receipt by City. Department's count will be accepted by vendor as final and conclusive on all shipments not accompanied by a packing slip. All rejected goods shall remain the property of vendor and will be returned at vendor's expense.

5. **Taxes:** Vendor is responsible for determining whether taxes are applicable to the order and for payment of the tax. Applicable taxes are to be included in each invoice due and may not be billed more than sixty (60) days after providing the goods or services to which the taxes apply.

6. **Warranty:** Vendor warrants that the goods and services furnished shall (a) conform to the specifications; (b) be free from defects in materials and workmanship; (c) be suitable for the purpose intended; (d) be new and of most current production; (e) be free from security interests or liens; and (f) not infringe upon or violate any copyrights or patent rights.

7. **Insurance:** Vendor agrees to comply with its state's law pertaining to workers' compensation benefits for its employees. If vendor fails to comply with the applicable workers compensation law when required to do so, the Contract may be terminated by City. Vendor also agrees to procure and maintain the insurance in https://www.cabq.gov/dfa/purchasing/vendor-contract/general-insurance-terms-and-conditions (Section 28) and any additional insurance coverage requested by City.

8. **Default:** City reserves the right to cancel all or any part of the Contract without cost to the City if vendor fails to meet the provisions of the Contract and, except as otherwise provided herein, to hold Vendor liable for any excess cost incurred by City due to vendor default.

9. **Force Majeure:** Neither Vendor nor City shall be liable for failure to perform its obligations under the Contract due to causes beyond the control and without the fault or negligence of either party. Such causes include, but are not restricted to, acts of God or the public enemy, acts of the State or federal government, fires, floods, epidemics, quarantine restrictions, strikes, freight embargoes, unusually severe weather and defaults of subcontractors due to any of the above, unless City shall determine that the supplies or services to be furnished by the subcontractor were obtainable from other sources in sufficient time to permit vendor to meet the required delivery schedules. The rights and remedies of the City provided in this paragraph shall not be exclusive and are in addition to any other rights now being provided by law or under the Contract.

10. **Termination for Lack of Appropriations:** Notwithstanding any provision in the Contract to the contrary, payments hereunder are contingent upon the Albuquerque City Council making the necessary appropriations. If sufficient appropriations are not made, the Contract may be terminated at the end of City's then current fiscal year upon written notice given by City to vendor. Such event shall not constitute an event of default and all payment obligations of City and all of its interest in the Contract will cease upon the date of termination. City's determination regarding appropriation shall be accepted by vendor and shall be final.

11. **Termination for Convenience:** City may terminate the Contract at any time by giving at least 30 days' written notice to the Vendor. In such event, vendor shall be paid under the terms of the Contract for all goods and/or services provided to and accepted by City. If ordered or accepted by City prior to the effective date of termination.

12. **Contract Changes:** In no case shall the Contract be changed without the prior written approval of City's Chief Procurement Officer.

13. **Assignment:** Neither the Contract, nor any interest therein, nor claim thereunder, shall be assigned or transferred by vendor, except as expressly authorized in writing by City's Chief Procurement Officer or designee. No such assignment or transfer shall relieve vendor from the obligations and liabilities under the Contract.

14. **City Furnished Property:** City furnished property shall be returned to City upon request in the same condition as received except for ordinary wear, tear, and modifications ordered hereunder.

15. **Indemnity:** Vendor agrees to defend, indemnify and hold harmless City from any and all claims, actions, suits or proceedings brought against City because of any injury or damage received or sustained by any person or property arising out of or resulting from the Contract or by reason of any asserted act or omission, neglect or misconduct of vendor or its agents or employees or any subcontractor or its agents or employees. This indemnity shall not be limited by reason of the specification of any particular insurance coverage in the Contract. City shall not indemnify vendor.

16. **Debarment, Suspension, Ineligibility and Exclusion Compliance:** Vendor certifies (a) that it has not been debarred, suspended or otherwise found ineligible to receive funds by any agency of the executive branch of the federal government, the State of New Mexico, any local public body of the State, or any state of the United States; and (b) should any notice of debarment, suspension, ineligibility or exclusion be received by vendor, vendor will notify City immediately.

17. **Conflict of Interest:** No officer, agent or employee of City will participate in any decision relating to the Contract which affects that person's financial interest, the financial interest of his or her spouse or minor child or the financial interest of any business in which he or she has a direct or indirect financial interest.

18. **Interest of Contractor:** Vendor agrees that it presently does not have, and shall acquire no direct or indirect interest which conflicts in any manner or degree with the performance of the terms of the Contract. Vendor will not employ any person who has any such conflict of interest to assist Vendor in performing the services.

19. **No Collusion:** Vendor represents that it has entered into the Contract without collusion on the part of Vendor with any person or firm, without fraud and in good faith. Vendor also represents that no gratuities, in the form of entertainment, gifts or otherwise, were, or during the term of the Contract, will be offered or given by vendor or any agent or representative of vendor to any officer or employee of the City with a view towards securing the Contract or for securing more favorable treatment with respect to making any determinations with respect to performing the Contract.

20. **Audits and Inspections:** At any time during normal business hours and as often as City may deem necessary, there shall be made available to City for examination all of vendor's records with respect to all matters covered by the Contract. Vendor shall permit City to audit, examine, and make excerpts or transcripts from such records, and to make audits of all contracts, invoices, materials, payrolls, records of personnel, conditions of employment and other data relating to all matters covered by the Contract. Vendor understands and will comply with City's Accountability in Government Ordinance, §§-10-1 et seq. and Inspector General Ordinance, §2-17-1 et seq. R.O.A. 1994, and also agrees to provide requested information and records and appear as a witness in hearings for City's Board of Ethics and Campaign Practices pursuant to Article XII, Section 8 of the Albuquerque City Charter.

21. **Compliance With Ethics Provisions:** Vendor certifies that it has not, either directly or indirectly, entered into action in restraint of free competitive bidding and is in compliance with the Ethical Conduct provisions of City's Public Purchases Ordinance, §-5-22 R.O.A. 1994.

22. **Non-discrimination:** In performing the Contract, vendor shall comply with the Federal Civil Rights Act of 1964 and Title VII of the Act and the Americans with Disabilities Act of 1990.

23. **Compliance With Laws:** In performing the Contract vendor shall comply with all applicable laws, ordinances and codes of the federal, state and local governments.

24. **Governing Law:** The Contract is governed by the laws of the State of New Mexico and the City of Albuquerque. The venue for actions arising out of the Contract is Bernalillo County, New Mexico.

25. **Federal Funding:** Procurements involving the expenditure of federal funds may be subject to mandatory applicable federal law and regulations.

Version Date: August 2018

City of Santa Fe
Treasury Department
200 Lincoln Ave.
Santa Fe, New Mexico 87504-0909
505-955-6551

BUSINESS REGISTRATION

Business Name: INTERA INCORPORATED
DBA: INTERA INCORPORATED

Business Location: 1435 S SAINT FRANCIS DR 103
SANTA FE , NM 87505

Owner: Bonnie Meihem

License Number: 227829

Issued Date: August 24, 2023

Expiration Date: August 24, 2024

CRS Number: 02480923003

License Type: Business License - Renewable

Classification: Contractor - General

Fees Paid: $35.00

INTERA INCORPORATED
9600 GREAT HILLS TRL Suite 300W
AUSTIN, TX 78759

THIS IS NOT A CONSTRUCTION PERMIT OR SIGN PERMIT. APPROPRIATE PERMITS MUST BE OBTAINED FROM THE CITY OF SANTA FE BUILDING PERMIT DIVISION PRIOR TO COMMENCEMENT OF ANY CONSTRUCTION OR THE INSTALLATION OF ANY EXTERIOR SIGN.

THIS REGISTRATION/LICENSE IS NOT TRANSFERRABLE TO OTHER BUSINESSES OR PREMISES.

Ver. 15 2/1/2020

Client#: 914933 INTERINC22

ACORD™ CERTIFICATE OF LIABILITY INSURANCE

DATE (MM/DD/YYYY) 6/03/2024

THIS CERTIFICATE IS ISSUED AS A MATTER OF INFORMATION ONLY AND CONFERS NO RIGHTS UPON THE CERTIFICATE HOLDER. THIS CERTIFICATE DOES NOT AFFIRMATIVELY OR NEGATIVELY AMEND, EXTEND OR ALTER THE COVERAGE AFFORDED BY THE POLICIES BELOW. THIS CERTIFICATE OF INSURANCE DOES NOT CONSTITUTE A CONTRACT BETWEEN THE ISSUING INSURER(S), AUTHORIZED REPRESENTATIVE OR PRODUCER, AND THE CERTIFICATE HOLDER.

IMPORTANT: If the certificate holder is an ADDITIONAL INSURED, the policy(ies) must have ADDITIONAL INSURED provisions or be endorsed. If SUBROGATION IS WAIVED, subject to the terms and conditions of the policy, certain policies may require an endorsement. A statement on this certificate does not confer any rights to the certificate holder in lieu of such endorsement(s).

PRODUCER
USI Insurance Services LLC -CL
4630 North Loop 1604 West
Suite 410
San Antonio, TX 78249

CONTACT NAME: Danelle Touchstone
PHONE (A/C, No, Ext): 210 524-2094 FAX (A/C, No): 610-537-1904
E-MAIL ADDRESS: danelle.touchstone@usi.com

INSURER(S) AFFORDING COVERAGE	NAIC #
INSURER A : Lloyd's of London	SURPLU
INSURER B : Hartford - WC Multiple Issuing Cos	00914
INSURER C : Sentinel Insurance Company Ltd.	11000
INSURER D :	
INSURER E :	
INSURER F :	

INSURED
INTERA Incorporated
9600 Great Hills Trl
Suite 300W
Austin, TX 78759

COVERAGES CERTIFICATE NUMBER: REVISION NUMBER:

THIS IS TO CERTIFY THAT THE POLICIES OF INSURANCE LISTED BELOW HAVE BEEN ISSUED TO THE INSURED NAMED ABOVE FOR THE POLICY PERIOD INDICATED. NOTWITHSTANDING ANY REQUIREMENT, TERM OR CONDITION OF ANY CONTRACT OR OTHER DOCUMENT WITH RESPECT TO WHICH THIS CERTIFICATE MAY BE ISSUED OR MAY PERTAIN, THE INSURANCE AFFORDED BY THE POLICIES DESCRIBED HEREIN IS SUBJECT TO ALL THE TERMS, EXCLUSIONS AND CONDITIONS OF SUCH POLICIES. LIMITS SHOWN MAY HAVE BEEN REDUCED BY PAID CLAIMS.

INSR LTR	TYPE OF INSURANCE	ADDL INSR	SUBR WVD	POLICY NUMBER	POLICY EFF (MM/DD/YYYY)	POLICY EXP (MM/DD/YYYY)	LIMITS	
A	X COMMERCIAL GENERAL LIABILITY			ENVP000025424	06/01/2024	06/01/2025	EACH OCCURRENCE	$1,000,000
	CLAIMS-MADE X OCCUR						DAMAGE TO RENTED PREMISES (Ea occurrence)	$300,000
	X Pollution Liability						MED EXP (Any one person)	$25,000
	X BI/PD DED $10,000						PERSONAL & ADV INJURY	$1,000,000
	GEN'L AGGREGATE LIMIT APPLIES PER:						GENERAL AGGREGATE	$2,000,000
	POLICY X PRO-JECT X LOC						PRODUCTS - COMP/OP AGG	$2,000,000
	OTHER:							$
C	AUTOMOBILE LIABILITY			65UECZR3402	06/01/2024	06/01/2025	COMBINED SINGLE LIMIT (Ea accident)	$1,000,000
	X ANY AUTO						BODILY INJURY (Per person)	$
	OWNED AUTOS ONLY / SCHEDULED AUTOS						BODILY INJURY (Per accident)	$
	X HIRED AUTOS ONLY / X NON-OWNED AUTOS ONLY						PROPERTY DAMAGE (Per accident)	$
								$
A	UMBRELLA LIAB X OCCUR			ENVX000020624	06/01/2024	06/01/2025	EACH OCCURRENCE	$6,000,000
	X EXCESS LIAB CLAIMS-MADE						AGGREGATE	$6,000,000
	DED RETENTION $							$
B	WORKERS COMPENSATION AND EMPLOYERS' LIABILITY			65WBOL6H7Y	06/01/2024	06/01/2025	X PER STATUTE OTH-ER	
	ANY PROPRIETOR/PARTNER/EXECUTIVE OFFICER/MEMBER EXCLUDED? Y/N N / N/A						E.L. EACH ACCIDENT	$1,000,000
	(Mandatory in NH)						E.L. DISEASE - EA EMPLOYEE	$1,000,000
	If yes, describe under DESCRIPTION OF OPERATIONS below						E.L. DISEASE - POLICY LIMIT	$1,000,000
A	Professional Liab			ENVP000025424	06/01/2024	06/01/2025	$2,000,000 Aggregate	
							$1,000,000 Per Claim	
				Retroactive Date	01/10/2002		$100,000 Deductible	

DESCRIPTION OF OPERATIONS / LOCATIONS / VEHICLES (ACORD 101, Additional Remarks Schedule, may be attached if more space is required)
RE: Contract ID SHR000022790 RFB-2022-322-DSW-CG
The Excess Policy sits over the General Liability, Automobile Liability and Professional Liability limits.
Professional Liability is on a claims-made basis.
The General Liability and Automobile Liability policies include a blanket Additional Insured endorsement that provides Additional Insured status to City of Santa Fe when there is a written contract that requires
(See Attached Descriptions)

CERTIFICATE HOLDER
City of Santa Fe
801 W. San Mateo
Santa Fe, NM 87505

CANCELLATION
SHOULD ANY OF THE ABOVE DESCRIBED POLICIES BE CANCELLED BEFORE THE EXPIRATION DATE THEREOF, NOTICE WILL BE DELIVERED IN ACCORDANCE WITH THE POLICY PROVISIONS.

AUTHORIZED REPRESENTATIVE

© 1988-2015 ACORD CORPORATION. All rights reserved.

DESCRIPTIONS (Continued from Page 1)

such status and only with regard to work performed on behalf of the named insured.
A thirty (30) days prior written notice of cancellation to certificate holder applies when required by written contract. The General Liability and Automobile Liability policies contain a special endorsement with Primary and Noncontributory wording when required by written contract.

Signature: Lawrence Garcia

Email: lmgarcia@santafenm.gov

City of Santa Fe, New Mexico

memo

Date: October 29, 2024

To: Public Works and Utilities Committee / Finance Committee / City Council

Via: John Dupuis, Public Utilities Department Director
Jesse D. Roach, Water Division Director

From: Michael R. Moya, T&D Section Manager
Bill Huey, Water Division Engineer

Subject: Request approval of Amendment No. 2 to Price Agreement Item # 23-0183 with A.A.C. Construction LLC (AAC) to Increase Maximum Compensation by $1,581,875.00 for a New Total Contract Amount of $5,041,875.30 including NMGRT (Bill Huey, Engineer, bchuey@santafenm.gov)

Vendor Name: A.A.C. Construction LLC

Vendor Number: 7958

Contract Number: 3202927

ITEM AND ISSUE:

The Public Utilities Department, Water Division requests approval of Amendment No. 2 to Price Agreement Item # 23-0183 with A.A.C. Construction LLC (AAC) to Increase Maximum Compensation by $1,581,875.00 for a New Total Contract Amount of $5,041,875.30 including NMGRT with No Corresponding Change to the Term of the Agreement. (Bill Huey, Engineer, bchuey@santafenm.gov)

ACTION REQUESTED:

Approval of Amendment No. 2 to Price Agreement # 23-0183

BACKGROUND AND SUMMARY:

In July 2021, City Council awarded bid number '21/43/B for the Priority Line Replacement Price Agreement, CIP # 3058 to both A.A.C. Construction LLC (AAC) and Sub Surface Contracting Inc. for four (4) Fiscal Years, FY 2021-22 until FY2024-25 at the initial funding amount of $3,500,000 inclusive of NMGRT. Future funding was dependent upon the availability of CIP funds.

The Priority Line Replacement Price Agreement is an on-call requirements contract, with the Water Division issuing work orders as needed for work such as water line replacements. The contract is funded from CIP for Transmission and Distribution to work on their infrastructure.

The Water Division historically planned to upgrade pressure reducing valve vaults but has not done so in the last few years. We request adding a total of $1,000,000 to this contract, $500,000.00 for each contractor to begin this upgrade program again.

The Water Division is requesting approval of $1,581,875.00 (including NMGRT) additional funding to allow for this Fiscal Year's work to be conducted.

PROCUREMENT METHOD:

ITB/PA No. '21/43/B FY 21/22 Priority Line Replacement Price Agreement, CIP # 3058 approved by City Council on 7/28/2021.

Chief Procurement Officer Approval: _____ **Date:** _____
Comment/Exceptions: _____

Supporting Information:

CONTRACT NUMBER:
The FY25 Munis contract number for AAC is 3202927
The FY25 Project ledger number for Priority Line Replacement is WTR2550521

$$$$$ SOURCE/REVENUE: ☒Expense ☐Revenue

The funding source is:
Fund Name/Number: Water Enterprise Fund/Fund 500
Munis Org Name/Number: Water CIP/5050395
Munis Object Name/Number: WIP Construction/572970

If the project is grant funded? List grant award number*:* _____

Grant Manager / Accounting Officer Approval: _____ **Date:** _____
Comment/Exceptions: _____

Project Ledger #: _____

Budget Officer Approval: Andy Hopkins **Date:** Oct 31, 2024
Comment/Exceptions: _____

CAPITAL ASSET (will this procurement result in a tangible item that costs more than $5,000?):

☒Yes | ☐ No

 # (if known): _____

Repair or Replacement of Existing Equipment:

☒Yes | ☐ No
If yes -> ☒Repair | ☒ Replacement

Please explain: Contract is used to repair main water line breaks and replace smaller sections of main water lines.

Capital Project:
(New and improvement projects that are going to cost $10,000 or more)
☒ Yes | ☐ No

Project Ledger #: _____

Anticipated length of project: To be determined _____

Asset Manager Approval: _____ **Date:** _____
Comment/Exceptions: _____

Department Approvals:
IT Components: ☐ **Yes |** ☒ **No**
Vehicles: ☐ **Yes |** ☒ **No**
Facilities, Furniture, Fixtures, Equipment: ☐ **Yes |** ☒ **No**

Approval: _____ **Title:** _____ **Date**: _____
Approval: _____ **Title:** _____ **Date**: _____
Comment & Exceptions: _____

Department Contract Administrator Contact Info:

Gina Wolff
vawolff@santafenm.gov

ATTACHMENTS:
Contract 3202927 Amendment No. 2
Budget Amendment Request (BAR)

cc:

Log # *{Finance use only}* :	
Journal # *{Finance use only}* :	

City of Santa Fe, New Mexico
BUDGET AMENDMENT RESOLUTION (BAR)

DEPARTMENT / DIVISION NAME	DATE
Public Utilities Department / Water Division	10/28/2024

ITEM DESCRIPTION	ORG	OBJECT	PROJECT	INCREASE	DECREASE
EXPENDITURES				*{enter as positive #}*	*{enter as negative #}*
Water Cap Proj, WIP Construction	5050395	572970	WTR2550521	1,581,875	
REVENUES				*{enter as negative #}*	*{enter as positive #}*
				$ 1,581,875	$ -

JUSTIFICATION: *(use additional page if needed)*
--Attach supporting documentation/memo

Please see attached Memo.

Contract (3202927) with A.A.C. Construction LLC for priority line repairs Amendment No. 2

{Complete section below if BAR results in a net change to ANY Fund}

Fund(s) Affected	Fund Balance Increase/(Decrease)
505	(1,581,875)
TOTAL:	**(1,581,875)**

Jonna Leigh Stack for Bill Huey — 10/29/2024
Prepared By *{print name}* — Date

Oct 31, 2024
Division Director Signature *{optional}* — Date

John Dupuis (Oct 31, 2024 15:27 MDT) Oct 31, 2024
Department Director Signature, John Dupuis — Date

{Use this form for Finance Committee/ City Council agenda items ONLY}

CITY COUNCIL APPROVAL

City Council Approval Date

Agenda Item #:

Andy Hopkins — Oct 31, 2024
Budget Officer — Date

Finance Director *{≤ $5,000}* — Date

City Manager *{≤ $60,000}* — Date

Client#: 2003588 AACCON2

ACORD™ CERTIFICATE OF LIABILITY INSURANCE

DATE (MM/DD/YYYY) 08/01/2024

THIS CERTIFICATE IS ISSUED AS A MATTER OF INFORMATION ONLY AND CONFERS NO RIGHTS UPON THE CERTIFICATE HOLDER. THIS CERTIFICATE DOES NOT AFFIRMATIVELY OR NEGATIVELY AMEND, EXTEND OR ALTER THE COVERAGE AFFORDED BY THE POLICIES BELOW. THIS CERTIFICATE OF INSURANCE DOES NOT CONSTITUTE A CONTRACT BETWEEN THE ISSUING INSURER(S), AUTHORIZED REPRESENTATIVE OR PRODUCER, AND THE CERTIFICATE HOLDER.

IMPORTANT: If the certificate holder is an ADDITIONAL INSURED, the policy(ies) must have ADDITIONAL INSURED provisions or be endorsed. If SUBROGATION IS WAIVED, subject to the terms and conditions of the policy, certain policies may require an endorsement. A statement on this certificate does not confer any rights to the certificate holder in lieu of such endorsement(s).

PRODUCER	CONTACT NAME: Isai Gomez	
USI Southwest Inc. NM - CL 4100 Osuna Road NE Suite 2-203 Albuquerque, NM 87109 505 262-2621	PHONE (A/C, No, Ext): 602-374-1341	FAX (A/C, No):
	E-MAIL ADDRESS: isai.gomez@usi.com	
	INSURER(S) AFFORDING COVERAGE	NAIC #
	INSURER A : Donegal Mutual Insurance Company	13692
INSURED A.A.C. Construction, LLC 18 La Luna Rd Santa Fe, NM 87507	INSURER B : New Mexico Mutual Casualty Company	40627
	INSURER C :	
	INSURER D :	
	INSURER E :	
	INSURER F :	

COVERAGES **CERTIFICATE NUMBER:** **REVISION NUMBER:**

THIS IS TO CERTIFY THAT THE POLICIES OF INSURANCE LISTED BELOW HAVE BEEN ISSUED TO THE INSURED NAMED ABOVE FOR THE POLICY PERIOD INDICATED. NOTWITHSTANDING ANY REQUIREMENT, TERM OR CONDITION OF ANY CONTRACT OR OTHER DOCUMENT WITH RESPECT TO WHICH THIS CERTIFICATE MAY BE ISSUED OR MAY PERTAIN, THE INSURANCE AFFORDED BY THE POLICIES DESCRIBED HEREIN IS SUBJECT TO ALL THE TERMS, EXCLUSIONS AND CONDITIONS OF SUCH POLICIES. LIMITS SHOWN MAY HAVE BEEN REDUCED BY PAID CLAIMS.

INSR LTR	TYPE OF INSURANCE	ADDL INSR	SUBR WVD	POLICY NUMBER	POLICY EFF (MM/DD/YYYY)	POLICY EXP (MM/DD/YYYY)	LIMITS	
A	X COMMERCIAL GENERAL LIABILITY	X	X	CPT9557153	01/01/2024	01/01/2025	EACH OCCURRENCE	$2,000,000
	CLAIMS-MADE X OCCUR						DAMAGE TO RENTED PREMISES (Ea occurrence)	$500,000
	X PD Ded:1,000						MED EXP (Any one person)	$15,000
							PERSONAL & ADV INJURY	$2,000,000
	GEN'L AGGREGATE LIMIT APPLIES PER:						GENERAL AGGREGATE	$4,000,000
	POLICY X PRO-JECT LOC						PRODUCTS - COMP/OP AGG	$4,000,000
	OTHER:							$
A	AUTOMOBILE LIABILITY	X	X	1000111796	01/01/2024	01/01/2025	COMBINED SINGLE LIMIT (Ea accident)	$1,000,000
	X ANY AUTO						BODILY INJURY (Per person)	$
	OWNED AUTOS ONLY / SCHEDULED AUTOS						BODILY INJURY (Per accident)	$
	X HIRED AUTOS ONLY / X NON-OWNED AUTOS ONLY						PROPERTY DAMAGE (Per accident)	$
								$
A	X UMBRELLA LIAB X OCCUR			CXL9557153	01/01/2024	01/01/2025	EACH OCCURRENCE	$5,000,000
	EXCESS LIAB CLAIMS-MADE						AGGREGATE	$5,000,000
	DED X RETENTION $0							$
B	WORKERS COMPENSATION AND EMPLOYERS' LIABILITY Y / N		X	93890109	04/04/2024	01/01/2025	X PER STATUTE / OTH-ER	
	ANY PROPRIETOR/PARTNER/EXECUTIVE OFFICER/MEMBER EXCLUDED? Y	N / A					E.L. EACH ACCIDENT	$1,000,000
	(Mandatory in NH)						E.L. DISEASE - EA EMPLOYEE	$1,000,000
	If yes, describe under DESCRIPTION OF OPERATIONS below						E.L. DISEASE - POLICY LIMIT	$1,000,000
A	Leased/ Rented Equipment			CPT9557153	01/01/2024	01/01/2025	$336,611 - Limit $1,000 - Deductible	

DESCRIPTION OF OPERATIONS / LOCATIONS / VEHICLES (ACORD 101, Additional Remarks Schedule, may be attached if more space is required)

The General Liability and Automobile policies include an automatic Additional Insured endorsement that provides Additional Insured status to the Certificate Holder, only when there is a written contract or written agreement between the named insured and the certificate holder and with regard to work performed by or on behalf of the named insured.

The Genreral Liability, Automobile, and Workers Compensation policies provide a Blanket Waiver of (See Attached Descriptions)

CERTIFICATE HOLDER

City of Santa Fe Water Division
801 W. San Mateo
Santa Fe, NM 87505

CANCELLATION

SHOULD ANY OF THE ABOVE DESCRIBED POLICIES BE CANCELLED BEFORE THE EXPIRATION DATE THEREOF, NOTICE WILL BE DELIVERED IN ACCORDANCE WITH THE POLICY PROVISIONS.

AUTHORIZED REPRESENTATIVE



© 1988-2015 ACORD CORPORATION. All rights reserved.

DESCRIPTIONS (Continued from Page 1)

Subrogation in favor of the same, when required by written contract.
The General Liability policy contains a special endorsement with "Primary and Noncontributory" wording, when required by written contract.
The Inland Marine policy includes a Loss Payee endorsement that provides Loss Payee status to the Certificate holder as respects to the above referenced.

RE: Various Jobs and Projects

Item # 23-0183
Munis # 3202927

CITY OF SANTA FE
AMENDMENT No. 1 TO
THE AGREEMENT
ITEM# 21-0483

AMENDMENT No. 1 (the "Amendment") to the CITY OF SANTA FE AGREEMENT, dated September 8, 2021 (the "Agreement"), between the City of Santa Fe (the "City") and AAC Construction, LLC, (the "Contractor"). The date of this Amendment shall be the date when it is executed by the City and the Contractor whichever occurs last.

RECITALS

A. Under the terms of the Agreement, Contractor has agreed to provide Priority Line Replacement work for the City of Santa Fe.

B. Pursuant to Article 14 of the Agreement, and for good and valuable consideration, the receipt and sufficiency of which are acknowledged by the parties, the City and the Contractor agree as follows:

1. COMPENSATION.

Article 2, paragraph A of the Agreement is amended to increase the amount of compensation by a total of two million two hundred and ten thousand dollars ($2,210,000) including applicable gross receipts tax, so that Article 2, paragraph A reads in its entirety:

A. The City shall pay to the Contractor in full payment for services satisfactorily performed at total amount up to one million one hundred and ninety three thousand one hundred and sixty two dollars and seventy five cents ($3,193,162.75). The New Mexico gross receipts tax levied on the amounts payable under this Agreement totaling two hundred and sixty six thousand eight hundred and thirty seven dollars and twenty five cents. ($266,837.25) shall be paid by the City to the Contractor as described in Exhibit A attached hereto. **The total amount payable to the Contractor under this Agreement, including gross receipts tax and expenses, shall not exceed three million four hundred and sixty thousand dollars ($3,460,000). This amount is a maximum and not a guarantee that the work assigned to be performed by Contractor under this Agreement shall equal the amount stated herein. The parties do not intend for the Contractor to continue to provide services without**

compensation when the total compensation amount is reached. Contractor is responsible for notifying the City when the services provided under this Agreement reach the total compensation amount. In no event will the Contractor be paid for services provided in excess of the total compensation amount without this Agreement being amended in writing prior to those services in excess of the total compensation amount being provided.

2. AGREEMENT IN FULL FORCE.

Except as specifically provided in this Amendment, the Agreement remains and shall remain in full force and effect, in accordance with its terms.

IN WITNESS WHEREOF, the parties have executed this Amendment No. 1 to the City of Santa Fe Agreement as of the dates set forth below.

CITY OF SANTA FE:

ALAN WEBBER, MAYOR

Date: Apr 30, 2023

CONTRACTOR:
AAC Construction, LLC

Andrew Sisneros

Digitally signed by Andrew Sisneros
DN: cn=Andrew Sisneros, o=A.A.C. Construction, LLC, ou, email=andrew@cnsp.net, c=US
Date: 2023-03-28 06:08:49 -06'00'

NAME & TITLE

Managing Member

Date: 3-28-2023

CRS# 03-157349-00-5
Registration # 19-00127501

ATTEST:

KRISTINE BUSTOS MIHELCIC, CITY CLERK XIV
GB MTG 04/26/23

CITY ATTORNEY'S OFFICE:

Patricia Feghali
ASSISTANT CITY ATTORNEY

APPROVED FOR FINANCES:

Emily K. Oster
Emily K. Oster (Apr 5, 2023 18:22 MDT)

Apr 5, 2023

EMILY OSTER, FINANCE DIRECTOR

5050395.572970 WTR1950536
Org/Obj

City of Santa Fe

Real Estate Summary of Contracts, Agreements, Amendments & Leases

Section to be completed by department

1. Munis Contract # **3202927**

Contractor: **A.A.C Construction**

Description: **CIP# 3058 Priority Line Replacement**

Contract ☐ Agreement ☉ Lease / Rent ☐ Amendment ☐

Term Start Date: **as approved** Term End Date: **6/30/25**

☑ Approved by Council Date: **Pending**

Contract / Lease: Contract $1,250,000

Amendment # 1 to the Original Contract / Lease # 21-0483

Increase/(Decrease) Amount $ $3,460,000

Extend Termination Date to: N/A

☉ Approved by Council Date: Pending

Amendment is for:

2. **HISTORY of Contract, Amendments & Lease / Rent - Please Elaborate** (option: attach spreadsheet if multiple amendments)

Original Contract # 21-0483 $1,250,000 approved 9/8/21

3. **Procurement History: 21/43/B**

For Apr 5, 2023

Purchasing Officer Review: Date:

Comment & Exceptions: amending compensation

4. **Funding Source: Water Enterprise Fund CIP** **Org / Object: 5050395.572970**

Andy Hopkins (Apr 5, 2023 17:31 MDT)

Apr 5, 2023

Budget Officer Approval: Date:

Comment & Exceptions:

Staff Contact who completed this form: Maya Martinez Phone # **4271**

Email: **mfmartinez@santafenm.gov**

To be recorded by City Clerk:

Clerk #

Date of Execution:

City of Santa Fe

Treasury Department
200 Lincoln Ave.
Santa Fe, New Mexico 87504-0909
505-955-6551

BUSINESS REGISTRATION

Business Name: A.A.C. CONSTRUCTION LLC
DBA: A.A.C. CONSTRUCTION LLC

Business Location: 18 LA LUNA RD
SANTA FE, NM 87507

CRS Number: 03157349-00-5

Owner: Andrew Sisneros

License Number: 222939

License Type: Business License - Renewable

Issued Date: May 20, 2022

Classification: Out of Jurisdiction Contractor - General

Expiration Date: May 20, 2023

Fees Paid: $10.00

A.A.C. CONSTRUCTION LLC
18 LA LUNA RD LA LUNA
SANTA FE , NM 87507

THIS IS NOT A CONSTRUCTION PERMIT OR SIGN PERMIT. APPROPRIATE PERMITS MUST BE OBTAINED FROM THE CITY OF SANTA FE BUILDING PERMIT DIVISION PRIOR TO COMMENCEMENT OF ANY CONSTRUCTION OR THE INSTALLATION OF ANY EXTERIOR SIGN.

THIS REGISTRATION/LICENSE IS NOT TRANSFERRABLE TO OTHER BUSINESSES OR PREMISES.

TO BE POSTED IN A CONSPICUOUS PLACE

Ver. 1c 2.7.2020

CITY OF SANTA FE PROCUREMENT CHECKLIST

Contractor Name: A.A.C Contractors

Procurement Title: 21/43/B Priority Line Replacement Price Agreement, CIP # 3058

Procurement Method: State Price Agreement ☐ *Cooperative* ☐ *Sole Source* ☐ *Other* ☐ _____

Exempt ☐ *Request For Proposal* (RFP) ☒ *Invitation To Bid (ITB)* ☐ *Contract under 60K* ☐ *Contract over 60K* ☐

Department Requesting Bill Huey Water Division, PUD

Procurement Requirements:
A procurement file shall be maintained for all contracts, regardless of the method of procurement. The procurement file shall contain the basis on which the award is made, all submitted bids, all evaluation materials, score sheets, quotations and all other documentation related to or prepared in conjunction with evaluation, negotiation, and the award process. The procurement shall contain a written determination from the Requesting Department, signed by the purchasing officer, setting forth the reasoning for the contract award decision before submitting to the Committees. .

REQUIRED DOCUMENTS FOR APPROVAL BY PURCHASING*

YES	N/A	
☒	☐	Approved Procurement Checklist (by Purchasing)
☒	☐	Memo addressed to City Manager (under 60K) Committees/City Council (over 60K)
☐	☒	State Price Agreement
☐	☒	RFP
☐	☒	Evaluation Committee Report
☒	☐	ITB
☒	☐	Bib Tab
☐	☒	Quotes (3 valid current quotes)
☐	☒	Cooperative Agreement
☐	☒	Sole Source Request and Determination Form
☐	☒	Contractors Exempt Letter
☒	☐	Purchasing Officers approval for exempt procurement
☐	☒	BAR
☐	☒	FIR
☒	☐	Executed Contract, Agreement or Amendment
☒	☐	Current Business Registration and CRS numbers on contract or agreement
☒	☐	Summary of Contracts and Agreements form
☐	☒	Certificate of Insurance
☐	☐	All documentation presented to Committees
☐	☐	Other: _____

Public Utilities Dept / Water Division/Bill Huey Bill Huey Engineer

Department Rep Printed Name (attesting that all information included) Title Date

for Apr 5, 2023

Purchasing Officer (attesting that all information is reviewed) Title Date

Include all other substantive documents and records of communication that pertain to the procurement and any resulting contract.

*

Log # *{Finance use only}*:	
Batch # *{Finance use only}*:	

City of Santa Fe, New Mexico
BUDGET AMENDMENT RESOLUTION (BAR)

DEPARTMENT / DIVISION NAME	DATE
PUD/Water/CIP	3/17/2023

ITEM DESCRIPTION	ORG	OBJECT	PROJECT	INCREASE	DECREASE
EXPENDITURES				*{enter as positive #}*	*{enter as negative #}*
Water CIP WIP Construction	5050395	572970	WTR1950535	5,000,000	
REVENUES				*{enter as negative #}*	*{enter as positive #}*
				$ 5,000,000	$ -

JUSTIFICATION: *(use additional page if needed)*
--Attach supporting documentation/memo

Budget Increase from Cash Balance in Water Enterprise Fund for Priority Line Replacement

Price Agreements Amendments #1 to A.A.C Construction and Sub Surface for

FY 23 CIP3058

{Complete section below if BAR results in a net change to ANY Fund}

Fund(s) Affected	Fund Balance Increase/(Decrease)
505	(5,000,000)
TOTAL:	**(5,000,000)**

Maya Martinez — 3/17/2023
Prepared By *{print name}* — Date

Division Director Signature *{optional}* — Date

John Dupuis (Apr 4, 2023 17:41 MDT)
Department Director Signature — Date

{Use this form for Finance Committee/ City Council agenda items ONLY}

CITY COUNCIL APPROVAL

City Council Approval Date

Agenda Item #:

Andy Hopkins — 4/5/23
Budget Officer — Date

Finance Director *{≤ $5,000}* — Date

City Manager *{≤ $60,000}* — Date

City of Santa Fe, New Mexico

memo

Date: August 9, 2021

To: Public Works-Public Utilities Committee / Finance Committee

From: Michael R. Moya, T&D Section Manager MM
Bill Huey, Water Division Engineer Associate BH

Via: Jesse D. Roach, Water Division Director JR

RE: Request to award bid number '21/43/B for the FY 2022 Priority Line Replacement Price Agreement, CIP # 3058 to Sub Surface Contracting, Inc. and A.A.C. Construction, LLC.; Request approval of a Budget Adjustment Request/Budget increase in the amount of $3,500,000.

ITEM AND ISSUE:

The Water Division requests award of bid number '21/43/B for the FY 21/22 Priority Line Replacement Price Agreement, CIP # 3058 to Sub Surface Contracting, Inc. and A.A.C. Construction, LLC for the remainder of four (4) Fiscal Years, FY 2021-22 until FY2024-25. Initial funding of $3,500,000 inclusive NMGRT is requested for FY2021-22. Funding is broken down for each contractor as follows: $2,250,000.00 inclusive of NMGRT for Sub Surface and $1,250,000.00 inclusive of NMGRT for AAC. .Future funding will depend upon the availability of CIP funds.

BACKGROUND AND SUMMARY:

The Priority Line Replacement Price Agreement is an on-call requirements contract, with the Water Division issuing work orders as needed for work such as water line replacements. The contract is funded from CIP for Transmission and Distribution to work on their infrastructure. The initial Contract amount is limited to $3,500,000.00 inclusive of New Mexico Gross Receipt Tax (NMGRT).

This is was multi-contractor award ITB to set the applicable Bid Items for future work. The ITB was only used to select the winning Contractors. Future work will be assigned under fully signed Work Orders for planned work on will be followed with a signed Work Order for Emergency repair. The exact type of work required will be used to select from the applicable Bid Items. Not every Bit Item is anticipated to be used.

The initial contract period is Fiscal Years 2021-2025. The bids for this project were opened on June 17, 2021 and were subsequently evaluated for completeness and accuracy. The low bid in the amount of $892,448.25 plus NMGRT was submitted by Sub Surface Contracting, Inc. A second acceptable bid of $933,364.22 was submitted by A.A.C. Construction, LLC. The Water Division is planning on replacing pipe on multiple streets in the Apache, San Ildefonso, San Felipe, MaClovia, Isabel and Rosina neighborhood, as well as Bishops Lodge between Artist and Murales Roads, Lorenzo Road, Malaga

Lane, Pino Road, San Isabel Street, Sosaya Street, Camino Santander and Camino Santiago/Camino Matias.

A summary of the bids is provided below:

Bidders	Total Bid without NMGRT	Bid Including Veterans preference without NMGRT
Sub Surface Contracting, Inc.	$892,448.25	$821,052.39
A.A.C. Construction, LLC	$933,364.22	
TLC Plumbing & Utility	$1,158,308.40	
Blueline Construction, Inc.	$1,476,101.57	
Allied 360 Construction, LLC	$2,364,321.74	

CONTRACT NUMBER:
The FY22 Munis contract number:
Sub Surface Contracting # 3202929
A.A.C Construction # 3202927

FUNDING SOURCE:
The funding source is:
Water Enterprise Fund/ CIP
FY 2022
Fund Name/Number: Water Enterprise Fund/ 500
Munis Org Name/Number: Water CIP / 5050395
Munis Object Name/Number: WIP Construction / 572970

Funds for this work will be available in Business Unit, Line Item 5050395.572970 in the amount of $1,600,000.00 plus NMGRT upon approval of the BAR Budget Increase.

RECOMMENDATION:

The Water Division recommends:

- Review and approval of award of contracts to Sub Surface Contracting, Inc. and A.A.C Construction, LLC for the FY 21/22 Priority Line Replacement Price Agreement, CIP # 3058 under ITB No. '21/43/B for a total amount of $3,500,000.00 inclusive of NMGRT for FY2021-22.

- Approval of the BAR – Budget Increase in the amount of $3,500,000 from the Water Enterprise Fund cash balance into the Water CIP fund for FY 2022.

- Forwarding and recommendation of approval of award and contract to the Finance Committee for their consideration and approval to the Governing Body for their final consideration and approval.

Log # *{Finance use only}*:	
Batch # *{Finance use only}*:	

City of Santa Fe, New Mexico
BUDGET AMENDMENT RESOLUTION (BAR)

DEPARTMENT / DIVISION NAME	DATE
PUD/Water/CIP	8/17/2021

ITEM DESCRIPTION	ORG	OBJECT	PROJECT	INCREASE	DECREASE
EXPENDITURES				*{enter as positive #}*	*{enter as negative #}*
Water CIP WIP Construction	5050395	572970	WTR1950535	3,500,000	
REVENUES				*{enter as negative #}*	*{enter as positive #}*
JUSTIFICATION: *(use additional page if needed)* *--Attach supporting documentation/memo*				$ 3,500,000	$ -

Budget Increase from Cash Balance in Water Enterprise Fund for Priority Line Replacement

Price Agreements Award of Bid 21/43/B to A.A.C Construction and Sub Surface for

FY 2022 CIP3058

{Complete section below if BAR results in a net change to ANY Fund}

Fund(s) Affected	Fund Balance Increase/(Decrease)
505	(3,500,000)
TOTAL:	**(3,500,000)**

Maya Martinez 8/17/2021
Prepared By *{print name}* Date

Division Director Signature *{optional}* Date

Shannon Jones 3/19/2021
Department Director Signature Date

{Use this form for Finance Committee/ City Council agenda items ONLY}

CITY COUNCIL APPROVAL

City Council Approval Date

Agenda Item #:

Andy Hopkins 8/20/21
Andy Hopkins (Aug 20, 2021 11:52 MDT)
Budget Officer Date

Finance Director *{≤ $5,000}* Date

City Manager *{≤ $60,000}* Date

Item# 21-0483
Munis Contract# 3202927

CITY OF SANTA FE

PRIORITY LINE REPLACEMENTPRICE
AGREEMENT

CIP # 3058

THIS AGREEMENT is made and entered into by and between the City of Santa Fe, New Mexico, hereinafter referred to as the "City," and **A.A.C. CONSTRUCTION**., hereinafter referred to as the Contractor, and is effective as of the date set forth below upon which it is executed by the Parties.

IT IS AGREED BETWEEN THE PARTIES:

1. **Scope of Work.**

A. The Contractor shall perform the following work and as described is Exhibit A attached hereto:

1) The Contractor shall perform all the work required by Water Division as required in the Contract Documents for Priority Line Replacement Contract. The work consists of, but is not limited to furnishing all equipment, labor and materials for the construction and repair of water mains, valves, hydrants, metered water service lines and settings, pressure reducing valves, vaults, and other incidental work such as pavement removal and replacement, traffic control all as required to extend, replace or repair water distribution, water storage, and water supply infrastructure, in accordance with the drawings, specifications, and other Contract Documents. All water piping shall be new, poly-wrapped ductile iron, unless otherwise specified.

2) The Contractor shall be responsible for verifications of all measurements and dimensions for bidding on each subsequent Work Order.

3) The Contractor shall provide and keep at the work site a complete "as built" record set of drawings that shall be corrected daily and shall show every change from the original approved drawings and specifications. These changes shall be forwarded to City periodically. The drawings shall reflect exact and actual "as-built" conditions of construction, installation, and erection as it progresses. Where drawings are not adequate to show "as built" conditions. Contractor shall prepare sketches which delineate the necessary "asbuilt" information. City shall furnish two (2) sets of all paper "blue-line" print "approved" drawings for use in accomplishing specified mark up. Final "as built" drawings shall be delivered to City by Contractor upon completion of the work.

4) The Contractor shall be responsible for maintaining traffic control at the site in conformance with the Manual on Uniform Traffic Control Devices.

5) The Contractor shall be responsible for all permits, fees, and State andCity inspections associated with the construction.

6) Incorporation by Reference. All exhibits, addenda, schedules of ITB 21/XX/B attached hereto and all certificates, work order documents, drawings, as-built and other

instruments contemplated to be delivered hereunder are hereby expressly made a part of this Agreement as fully as though set forth herein, and all references to this Agreement herein orin any of such writings shall be deemed to refer to and include all of such writings. This Agreement contains the entire agreement between the parties with respect to the subject matter hereof and supersedes all prior agreements and understandings, both written and oral, among the parties with respect to the subject matter hereof. If there is any conflict between such exhibits or addenda and the terms of this Agreement, such exhibits or addenda shall control.

2. Compensation.

A. The City shall pay to the Contractor in full payment for services satisfactorily performed at total amount up to one million one hundred fifty two thousand seven hundred thirty seven dollars and seventy-five cents ($1,152,737.75). The New Mexico gross receipts tax levied on the amounts payable under this Agreement totaling ninety seven thousand two hundred sixty two dollars and twenty five cents ($97,262.25) shall be paid by the City to the Contractor as described in Exhibit A attached hereto. **The total amount payable to the Contractor under this Agreement, including gross receipts tax and expenses, shall not exceed one million two hundred fifty thousand dollars ($1,250,000)). This amount is a maximum and not a guarantee that the work assigned to be performed by Contractor under this Agreement shall equal the amount stated herein. The parties do not intend for the Contractor to continue to provide services without compensation when the total compensation amount is reached. Contractor is responsible for notifying the City when the services provided under this Agreement reach the total compensation amount. In no event will the Contractor be paid for services provided in excess of the total compensation amount without this Agreement being amended in writing prior to those services in excess of the total compensation amount being provided.**

B. Payment is subject to availability of funds pursuant to the Appropriations Paragraph set forth below and to any negotiations between the parties from year to year pursuant to Paragraph 1, Scope of Work, and to approval by the City. All invoices MUST BE received by the City no later than thirty 30) days after the termination of the Fiscal Year in which the services were delivered. Invoices received after such date WILL NOT BE PAID.

C. Contractor must submit a detailed statement accounting for all services performed and expenses incurred. If the City finds that the services are not acceptable, within thirty days after the date of receipt of written notice from the Contractor that payment is requested, it shall provide the Contractor a letter of exception explaining the defect or objection to the services, and outlining steps the Contractor may take to provide remedial action. Upon certification by the City that the services have been received and accepted, payment shall be tendered to the Contractor within thirty days after the date of acceptance. If payment is made by mail, the payment shall be deemed tendered on the date it is postmarked. However, the City shall not incur late charges, interest, or penalties for failure to make payment within the time specified herein.

3. Term.

THIS AGREEMENT SHALL NOT BECOME EFFECTIVE UNTIL APPROVED BY THE CITY. This Agreement shall terminate on **June 30, 2025** unless terminated pursuant to paragraph 4 (Termination), or paragraph 5 (Appropriations). In accordance with Section 13-1-150 NMSA 1978, no contract term for a professional services contract, including extensions and renewals, shall exceed four years, except as set forth in Section 13-1-150 NMSA 1978.

4. Termination.

A. Termination. This Agreement may be terminated by either of the parties hereto upon written notice delivered to the other party at least thirty (30) days prior to the intended dateof termination. Except as otherwise allowed or provided under this Agreement, the City sole liability upon such termination shall be to pay for acceptable work performed prior to the Contractor's receipt

of the notice of termination, if the City is the terminating party, or the Contractors receipt of the notice of termination, if the Contractor is the terminating party; provided, however, that a notice of termination shall not nullify or otherwise affect either party'sliability for pre-termination defaults under or breaches of this Agreement. The Contractor shall submit an invoice for such work within thirty (30) days of receiving or sending the notice of termination. Notwithstanding the foregoing, this Agreement may be terminated immediately upon written notice to the Contractor if the Contractor becomes unable to perform the services contracted for, as determined by the City or if, during the term of this Agreement, the Contractor or any of its officers, employees or agents is indicted for fraud, embezzlement or other crime dueto misuse of City funds or due to the Appropriations paragraph herein. *THIS PROVISION JS NOT EXCLUSIVE AND DOES NOT WAIVE THE OTHER LEGAL RIGHTS AND REMEDIES CAUSED BY THE CONTRACTOR'S DEFAULT/BREACH OF THIS AGREEMENT.*

B. Termination Management. Immediately upon receipt by either the City or the Contractor of notice of termination of this Agreement, the Contractor shall: 1) not incur any further obligations for salaries, services or any other expenditure of funds under this Agreement withoutwritten approval of the City; 2) comply with all directives issued by the City in the notice oftermination as to the performance of work under this Agreement; and 3) take such action as the City shall direct for the protection, preservation, retention or transfer of all property titled to theCity and records generated under this Agreement. Any non-expendable personal property orequipment provided to or purchased by the Contractor with contract funds shall become property of the City upon termination and shall be submitted to the City as soon as practicable.

5. Appropriations.

The terms of this Agreement are contingent upon sufficient appropriations and authorization being made by the City Council for the performance of this Agreement. If sufficient appropriations and authorization are not made by the City Council, this Agreement shall terminate immediately upon written notice being given by the City to the Contractor. The City's decision asto whether sufficient appropriations are available shall be accepted by the Contractor and shall be final. If the City proposes an amendment to the Agreement to unilaterally reduce funding, the Contractor shall have the option to terminate the Agreement or to agree to the reduced funding, within thirty (30) days of receipt of the proposed amendment.

6. Status of Contractor.

The Contractor and its agents and employees are independent contractors performing professional services for the City and are not employees of the City. The Contractor and its agents and employees shall not accrue leave, retirement, insurance, bonding, use of City vehicles, or anyother benefits afforded to employees of the City as a result of this Agreement. The Contractor acknowledges that all sums received hereunder are reportable by the Contractor for tax purposes, including without limitation, self-employment and business income tax. The Contractor agrees not to purport to bind the City unless the Contractor has express written authority to do so, and then only within the strict limits of that authority.

7. Construction Contract Performance and Payment Bond.

A. When a construction contract is awarded in excess of twenty-five thousand dollars ($25,000), the following bonds or security shall be delivered to the City and shall become binding on the parties upon the execution of the contract. If the Contractor fails to deliver the required performance and payment bonds, the Contractor's bid shall be rejected, its bid security shall be enforced to the extent of actual damages. Award of the contract shall be made pursuant to the Procurement Code in the following manner:

(1) a performance bond satisfactory to the City, executed by a surety company

authorized to do business in this state and said surety to be approved in federal circular 570 as published by the United States treasury department or the state board of finance or the local governing authority, in an amount equal to one hundred percent of the price specifiedin the contract; and

(2) a payment bond satisfactory to the City, executed by a surety company authorized to do business in this state and said surety to be approved in federal circular 570 as published by the United States treasury department or the state board of finance or the local governing authority, in an amount equal to one hundred percent of the price specifiedin the contract, for the protection of all persons supplying labor and material to the contractor or its subcontractors for the performance of the work provided for in the contract.

B. A subcontractor shall provide a performance and payment bond on a public works Building project if the subcontractor's contract for work to be performed on a project is one hundred twenty-five thousand dollars ($125,000) or more.

8. Assignment.

The Contractor shall not assign or transfer any interest in this Agreement or assign any claims for money due or to become due under this Agreement without the prior written approval of the City.

9. Subcontracting.

The Contractor shall not subcontract any portion of the services to be performed under this Agreement without the prior written approval of the City. No such subcontract shall relieve the primary Contractor from its obligations and liabilities under this Agreement, nor shall any subcontract obligate direct payment from the City.

10. Release.

Final payment of the amounts due under this Agreement shall operate as a release of the City, its officers and employees from all liabilities, claims and obligations whatsoever arising from or under this Agreement.

11. Confidentiality.

Any confidential information provided to or developed by the Contractor in the performance of this Agreement shall be kept confidential and shall not be made available to any individual or organization by the Contractor without the prior written approval of the City.

12. Product of Service — Copyright.

All materials developed or acquired by the Contractor under this Agreement shall becomethe property of the City and shall be delivered to the City no later than the termination date of this Agreement. Nothing developed or produced, in whole or in part, by the Contractor under this Agreement shall be the subject of an application for copyright or other claim of ownership by or on behalf of the Contractor.

13. Conflict of Interest; Governmental Conduct Act.

A. The Contractor represents and warrants that it presently has no interest and, duringthe term of this Agreement, shall not acquire any interest, direct or indirect, which would conflictin any manner or degree with the performance or services required under the Agreement.

B. The Contractor further represents and warrants that it has complied with, and, during the term of this Agreement, will continue to comply with, and that this Agreement complies with all applicable

provisions of the Governmental Conduct Act, Chapter 10, Article 16 NMSA 1978.

C. Contractor's representations and warranties in Paragraphs A and B of this Article 13 are material representations of fact upon which the City relied when this Agreement was enteredinto by the parties. Contractor shall provide immediate written notice to the City if, at any timeduring the term of this Agreement, Contractor learns that Contractor's representations and warranties in Paragraphs A and B of this Article 13 were erroneous on the effective date of this Agreement or have become erroneous by reason of new or changed circumstances. If it is laterdetermined that Contractor's representations and warranties in Paragraphs A and B of this Article 13 were erroneous on the effective date of this Agreement or have become erroneous by reason ofnew or changed circumstances, in addition to other remedies available to the City and notwithstanding anything in the Agreement to the contrary, the City may immediately terminate the Agreement.

D. All terms defined in the Governmental Conduct Act have the same meaning in thissection.

14. Amendment.

A. This Agreement shall not be altered, changed or amended except by instrument in writing executed by the parties hereto and all other required signatories.

B. If the City proposes an amendment to the Agreement to unilaterally reduce funding due to budget or other considerations, the Contractor shall, within thirty (30) days of receipt of the proposed Amendment, have the option to terminate the Agreement, pursuant to the termination provisions as set forth in Article 4 herein, or to agree to the reduced funding.

15. Change Orders.

A. Changes. The Contractor may only make changes or revisions within the Scope of Work as defined by Article 1 and/or Exhibit 1 after receipt of written approval by the City Manager or his/her designee. Such change may only be made to Tasks or Sub-Task as defined in the Scope of Work. Under no circumstance shall such change affect the:

1) Deliverable requirements, as outlined in the Scope of Work;
2) Due date of any Deliverable, as outlined in the Scope of Work;
3) Compensation of any Deliverable, as outlined in the Scope of Work;
4) Agreement compensation, as outlined in Article 2; or
5) Agreement termination, as outlined in Article 4.

B. Change Request Process. In the event that circumstances warrant a change to accomplish the Scope of Work as described above, a Change Request shall be submitted that meets the following criteria:

1) The Project Manager shall draft a written Change Request for review and approval by the City Manager to include:
   (a) the name of the person requesting the change;
   (b) a summary of the required change;
   (c) the start date for the change;
   (d) the reason and necessity for change;
   (e) the elements to be altered; and
   (f) The impact of the change.

2) The City Manager shall provide a written decision on the Change Request to the Contractor within a maximum of ten (10) Business Days of receipt of the Change Request. All decisions made by the City Manager are final. Change Requests, once approved, become a part of the Agreement and become binding as a part of the original Agreement.

16. Merger.

This Agreement incorporates all the Agreements, covenants and understandings between the parties hereto concerning the subject matter hereof, and all such covenants, Agreements and understandings have been merged into this written Agreement. No prior Agreement or understanding, oral or otherwise, of the parties or their agents shall be valid or enforceable unless embodied in this Agreement.

17. Penalties for violation of law.

The Procurement Code, Sections 13-1-28 through 13-1-199, NMSA 1978, imposes civil and criminal penalties for its violation. In addition, the New Mexico criminal statutes imposefelony penalties for illegal bribes, gratuities and kickbacks.

18. Equal Opportunity Compliance.

The Contractor agrees to abide by all federal and state laws and rules and regulations, andSanta Fe City Code, pertaining to equal employment opportunity. In accordance with all such laws of the State of New Mexico, the Contractor assures that no person in the United States shall, on the grounds of race, religion, color, national origin, ancestry, sex, age, physical or mental handicap, or serious medical condition, spousal affiliation, sexual orientation or gender identity, be excluded from employment with or participation in, be denied the benefits of, or be otherwise subjected to discrimination under any program or activity performed under this Agreement. If Contractor is found not to be in compliance with these requirements during the life of this Agreement, Contractor agrees to take appropriate steps to correct these deficiencies.

19. Applicable Law.

The laws of the State of New Mexico shall govern this Agreement, without giving effect to its choice of law provisions. Venue shall be proper only in a New Mexico court of competent jurisdiction in accordance with Section 38-3-1 (G) NMSA 1978. By execution of this Agreement, Contractor acknowledges and agrees to the jurisdiction of the courts of the State of New Mexicoover any and all lawsuits arising under or out of any term of this Agreement.

20. Workers Compensation.

The Contractor agrees to comply with state laws and rules applicable to workers compensation benefits for its employees. If the Contractor fails to comply with the Workers Compensation Act and applicable rules when required to do so, this Agreement may be terminated by the City.

21. Professional Liability Insurance. Contractor shall maintain professional liability insurance throughout the term of this Agreement providing a minimum coverage in the amount required under the New Mexico Tort Claims Act. The Contractor shall furnish the City with proofof insurance of Contractor's compliance with the provisions of this section as a condition prior toperforming services under this Agreement.

22. Other Insurance

If the Services contemplated under this Agreement will be performed on or in City facilitiesor

property, Contractor shall maintain in force during the entire term of this Agreement, the following insurance coverage(s), naming the City as additional insured,

A. **Commercial General Liability** insurance shall be written on an occurrence basis and be a broad as ISO Form CG 00 01 with limits not less than $2,000,000 per occurrence and #2,000,000 in the aggregate for claims against bodily injury, personal and advertising injury, and property damage. Said policy shall include broad from Contractual Liability coverage and be endorsed to name the City of Santa Fe, their officials, officers, employees and agents as additionalinsureds.

B. **Business Automobile Liability** insurance for all owned, non-owned automobiles,with a combined single limit not less than $1,000,000 per accident.

C. **Broader Coverage and Limits.** The insurance requirements under this Agreement shall be the greater of (1) the minimum coverage and limits specified in this Agreement, or (2) the broader coverage and maximum limits of coverage of any insurance policy or proceeds available tothe Named Insured. It is agreed that these insurance requirements shall not in any way act to reduce coverage that is broader or that includes higher limits than the minimums required herein. No representation is made that minimum insurance requirements of this Agreement are sufficient to cover the obligations of Contractor hereunder.

D. Contractor shall maintain the above insurance for the term of this Agreement and name the City as an additional insured and provide for 30 days cancellation notice on any Certificate of Insurance form furnished by Contractor. Such certificate shall also specifically state the coverage provided under the policy is primary over any other valid and collectible insurance and provide a waiver of subrogation.

23. Records and Financial Audit.

The Contractor shall maintain detailed time and expenditure records that indicate the date; time, nature and cost of services rendered during the Agreement's term and effect and retain them for a period of three (3) years from the date of final payment under this Agreement. The records shall be subject to inspection by the City. The City shall have the right to audit billings both before and after payment. Payment under this Agreement shall not foreclose the right of the City to recover excessive or illegal payments.

24. Indemnification.

The Contractor shall defend, indemnify and hold harmless the City from all actions, proceeding, claims, demands, costs, damages, attorney's fees and all other liabilities and expenses of any kind from any source which may arise out of the performance of this Agreement, caused by the negligent act or failure to act of the Contractor, its officers, employees, servants, subcontractors or agents, or if caused by the actions of any client of the Contractor resulting in injury or damageto persons or property during the time when the Contractor or any officer, agent, employee, servantor subcontractor thereof has or is performing services pursuant to this Agreement. In the event that any action, suit or proceeding related to the services performed by the Contractor or any officer, agent, employee, servant or subcontractor under this Agreement is brought against the Contractor,the Contractor shall, as soon as practicable but no later than two (2) days after it receives notice thereof, notify the legal counsel of the City.

25. New Mexico Tort Claims Act

Any liability incurred by the City of Santa Fe in connection with this Agreement is subjectto the immunities and limitations of the New Mexico Tort Claims Act, Section 41-4-1, et. seq.NMSA 1978, as amended. The city and its "public employees" as defined in the New Mexico Tort Claims Act, do not waive sovereign immunity, do not waive any defense and do not waive anylimitation of liability pursuant to law. No provision in this Agreement modifies or waives any provision of the New Mexico

Tort Claims Act.

26. Invalid Term or Condition.

If any term or condition of this Agreement shall be held invalid or unenforceable, the remainder of this Agreement shall not be affected and shall be valid and enforceable.

27. Enforcement of Agreement.

A party's failure to require strict performance of any provision of this Agreement shall notwaive or diminish that party's right thereafter to demand strict compliance with that or any other provision. No waiver by a party of any of its rights under this Agreement shall be effective unlessexpress and in writing, and no effective waiver by a party of any of its rights shall be effective to waive any other rights.

28. Notices.

Any notice required to be given to either party by this Agreement shall be in writing andshall be delivered in person, by courier service or by U.S. mail, either first class or certified, return receipt requested, postage prepaid, as follows:

To the City:
Water Division Director
801 W. San Mateo
Santa Fe, NM 87505

To the Contractor:
A.AC Construction LLC
18 La Luna Road
Santa Fe, NM 87507

29. Authority.

If Contractor is other than a natural person, the individual(s) signing this Agreement on behalf of Contractor represents and warrants that he or she has the power and authority to bindContractor, and that no further action, resolution, or approval from Contractor is necessary to enterinto a binding contract.

IN WITNESS WHEREOF, the Parties have executed this Agreement as of the date of the signatureby the required approval authorities below.

CITY OF SANTA FE:

ALAN WEBBER, MAYOR

DATE: Sep 12, 2021

CONTRACTOR:

Andrew Sisneros (Aug 19, 2021 16:05 MDT)

NAME
Andrew Sisneros, Managing Member

TITLE
DATE: Aug 19, 2021

CRS# 03-157349-00-5
Registration # 222939

ATTEST:

Kristine Mihelcic
Kristine Mihelcic (Sep 15, 2021 12:10 MDT)

KRISTINE BUSTOS MIHELCIC, CITY CLERK
GB MTG 09/08/2021

CITY ATTORNEY'S OFFICE:

Marcos Martinez
Marcos Martinez (Aug 17, 2021 10:24 MDT)

SENIOR ASSISTANT CITY ATTORNEY

APPROVED FOR FINANCES:

Mary McCoy

MARY MCCOY, FINANCE DIRECTOR

5050395.572970
Org. Name/Org#

AJH
AJH

Bid Item	Approx. QTY.	Unit	Article and Description	AAC		Sub Surface	
				Unit Price	Item Price	Unit Price	Item Price
5	35	LF	2" PVC Water Main, cip, all lengths	$ 32.50	$ 1,137.50	$ 30.00	$ 1,050.00
10	35	LF	4" PVC Water Main, cip, <100'	$ 38.00	$ 1,330.00	$ 36.00	$ 1,260.00
15	100	LF	4" PVC Water Main, cip, >100'	$ 36.00	$ 3,600.00	$ 34.00	$ 3,400.00
20	50	LF	6" PVC Water Main, cip, <100'	$ 43.50	$ 2,175.00	$ 42.00	$ 2,100.00
25	150	LF	6" PVC Water Main, cip, >100'	$ 40.50	$ 6,075.00	$ 39.00	$ 5,850.00
30	75	LF	8" PVC Water Main, cip, <100'	$ 49.00	$ 3,675.00	$ 48.00	$ 3,600.00
35	200	LF	8" PVC Water Main, cip, >100'	$ 46.75	$ 9,350.00	$ 45.50	$ 9,100.00
40	35	LF	10" PVC Water Main, cip, <100'	$ 56.00	$ 1,960.00	$ 52.00	$ 1,820.00
45	100	LF	10" PVC Water Main, cip, >100'	$ 52.00	$ 5,200.00	$ 49.00	$ 4,900.00
50	50	LF	12" PVC Water Main, cip, <100'	$ 69.37	$ 3,468.50	$ 66.75	$ 3,337.50
55	150	LF	12" PVC Water Main, cip, >100'	$ 66.25	$ 9,937.50	$ 64.50	$ 9,675.00
60	50	LF	14" PVC Water Main, cip	$ 87.00	$ 4,350.00	$ 79.00	$ 3,950.00
65	50	LF	16" PVC Water Main, cip	$ 103.50	$ 5,175.00	$ 97.00	$ 4,850.00
70	50	LF	24" PVC Water Main, cip	$ 167.50	$ 8,375.00	$ 100.00	$ 5,000.00
75	35	LF	2" DI Water Main, cip, all lengths	$ 42.00	$ 1,470.00	$ -	$ -
80	50	LF	4" DI Water Main, cip, <100'	$ 63.75	$ 3,187.50	$ 57.50	$ 2,875.00
85	100	LF	4" DI Water Main, cip, >100'	$ 56.50	$ 5,650.00	$ 56.00	$ 5,600.00
90	75	LF	6" DI Water Main, cip, <100'	$ 63.50	$ 4,762.50	$ 53.00	$ 3,975.00
95	250	LF	6" DI Water Main, cip, >100'	$ 56.50	$ 14,125.00	$ 51.00	$ 12,750.00
100	75	LF	8" DI Water Main, cip, <100'	$ 68.00	$ 5,100.00	$ 60.25	$ 4,518.75
105	250	LF	8" DI Water Main, cip, >100'	$ 73.00	$ 18,250.00	$ 58.00	$ 14,500.00
110	35	LF	10" DI Water Main, cip, <100'	$ 77.00	$ 2,695.00	$ 65.00	$ 2,275.00
115	100	LF	10" DI Water Main, cip, >100'	$ 74.00	$ 7,400.00	$ 63.00	$ 6,300.00
120	50	LF	12" DI Water Main, cip, <100'	$ 99.00	$ 4,950.00	$ 78.00	$ 3,900.00
125	100	LF	12" DI Water Main, cip, >100'	$ 89.50	$ 8,950.00	$ 74.00	$ 7,400.00
130	50	LF	14" DI Water Main, cip	$ 115.50	$ 5,775.00	$ 87.00	$ 4,350.00
135	50	LF	16" DI Water Main, cip	$ 139.50	$ 6,975.00	$ 101.00	$ 5,050.00
140	50	LF	24" DI Water Main, cip	$ 207.00	$ 10,350.00	$ 159.00	$ 7,950.00
145	75	LF	Extra Pay for Trench Depth, 6'-8'	$ 41.00	$ 3,075.00	$ 8.00	$ 600.00
150	50	LF	Extra Pay for Trench Depth, 8'-10'	$ 98.00	$ 4,900.00	$ 12.00	$ 600.00
155	25	LF	Extra Pay for Trench Depth, 10'-14'	$ 154.00	$ 3,850.00	$ 30.00	$ 750.00
160	20	CY	Rock Excavation	$ 325.00	$ 6,500.00	$ 220.00	$ 4,400.00
165	300	CY	Exploratory Excavation (as SDCW Approved)	$ 50.00	$ 15,000.00	$ 65.00	$ 19,500.00
170	75	CY	Imported Backfill (as SDCW Approved)	$ 36.00	$ 2,700.00	$ 24.00	$ 1,800.00
175	1,000	LB	Fitting Installation	$ 4.50	$ 4,500.00	$ 4.00	$ 4,000.00
180	500	LB	Fitting Insertion	$ 26.00	$ 13,000.00	$ 34.00	$ 17,000.00
185	25	EA	4" Retainer Ring/ Bolt on Flange	$ 60.00	$ 1,500.00	$ 65.00	$ 1,625.00
190	50	EA	6" Retainer Ring/ Bolt on Flange	$ 86.50	$ 4,325.00	$ 105.00	$ 5,250.00
195	50	EA	8" Retainer Ring/ Bolt on Flange	$ 98.50	$ 4,925.00	$ 119.00	$ 5,950.00
200	20	EA	10" Retainer Ring/ Bolt on Flange	$ 123.00	$ 2,460.00	$ 121.00	$ 2,420.00
205	20	EA	12" Retainer Ring/ Bolt on Flange	$ 147.50	$ 2,950.00	$ 145.00	$ 2,900.00
210	20	EA	14" Retainer Ring/ Bolt on Flange	$ 184.50	$ 3,690.00	$ 179.00	$ 3,580.00
215	10	EA	16" Retainer Ring/ Bolt on Flange	$ 275.00	$ 2,750.00	$ 250.00	$ 2,500.00
220	25	EA	4" Joint Harness	$ 70.50	$ 1,762.50	$ 40.00	$ 1,000.00
225	50	EA	6" Joint Harness	$ 95.00	$ 4,750.00	$ 110.00	$ 5,500.00
230	50	EA	8" Joint Harness	$ 125.00	$ 6,250.00	$ 120.00	$ 6,000.00
235	20	EA	10" Joint Harness	$ 160.00	$ 3,200.00	$ 160.00	$ 3,200.00
240	20	EA	12" Joint Harness	$ 192.50	$ 3,850.00	$ 180.00	$ 3,600.00
245	20	EA	14" Joint Harness	$ 370.00	$ 7,400.00	$ 375.00	$ 7,500.00
250	10	EA	16" Joint Harness	$ 427.50	$ 4,275.00	$ 410.00	$ 4,100.00
255	10	CY	Concrete Thrust Blocking (as SDCW Approved)	$ 315.00	$ 3,150.00	$ 250.00	$ 2,500.00
260	2	EA	Tapping Sleeve w/ Tap, 4" X 4"	$ 1,350.00	$ 2,700.00	$ 1,350.00	$ 2,700.00
265	4	EA	Tapping Sleeve w/ Tap, 6" X 4" - 6"	$ 1,567.50	$ 6,270.00	$ 1,500.00	$ 6,000.00
270	4	EA	Tapping Sleeve w/ Tap, 8" X 4" - 8"	$ 1,900.00	$ 7,600.00	$ 1,800.00	$ 7,200.00

Bid Item	Approx. QTY.	Unit	Article and Description	AAC		Sub Surface	
				Unit Price	Item Price	Unit Price	Item Price
275	2	EA	Tapping Sleeve w/ Tap, 10" X 4" - 10"	$ 2,250.00	$ 4,500.00	$ 2,100.00	$ 4,200.00
280	4	EA	Tapping Sleeve w/ Tap, 12" X 4" - 12"	$ 2,650.00	$ 10,600.00	$ 2,300.00	$ 9,200.00
285	1	EA	Tapping Sleeve w/Tap, 20" X 4" - 20"	$ 4,747.50	$ 4,747.50	$ 4,200.00	$ 4,200.00
290	1	EA	Non-Pressurized Connections, 2" line	$ 1,650.00	$ 1,650.00	$ 1,500.00	$ 1,500.00
295	1	EA	Non-Pressurized Connections, 4"-10" line	$ 3,587.50	$ 3,587.50	$ 3,100.00	$ 3,100.00
300	1	EA	Non-Pressurized Connections, 12"-20" line	$ 6,050.00	$ 6,050.00	$ 4,100.00	$ 4,100.00
305	2	EA	2" CL125 Gate Valves, cip.	$ 807.50	$ 1,615.00	$ 850.00	$ 1,700.00
310	2	EA	4" CL125 Gate Valves, cip.	$ 925.00	$ 1,850.00	$ 1,200.00	$ 2,400.00
315	5	EA	6" CL125 Gate Valves, cip.	$ 1,200.00	$ 6,000.00	$ 1,525.00	$ 7,625.00
320	5	EA	8" CL125 Gate Valves, cip.	$ 1,650.00	$ 8,250.00	$ 1,725.00	$ 8,625.00
325	1	EA	10" CL125 Gate Valves, cip.	$ 2,315.00	$ 2,315.00	$ 2,325.00	$ 2,325.00
330	2	EA	12" CL125 Gate Valves, cip.	$ 2,900.00	$ 5,800.00	$ 2,800.00	$ 5,600.00
335	1	EA	2" CL250 Gate Valves, cip.	$ 792.50	$ 792.50	$ 700.00	$ 700.00
340	1	EA	4" CL250 Gate Valves, cip.	$ 1,837.50	$ 1,837.50	$ 1,800.00	$ 1,800.00
345	10	EA	6" CL250 Gate Valves, cip.	$ 1,950.00	$ 19,500.00	$ 1,825.00	$ 18,250.00
350	3	EA	8" CL250 Gate Valves, cip.	$ 2,475.00	$ 7,425.00	$ 2,000.00	$ 6,000.00
355	1	EA	10" CL250 Gate Valves, cip.	$ 4,000.00	$ 4,000.00	$ 3,700.00	$ 3,700.00
360	1	EA	12" CL250 Gate Valves, cip.	$ 4,552.50	$ 4,552.50	$ 4,200.00	$ 4,200.00
365	1	EA	16" CL250 Gate Valves, cip.	$ 7,025.00	$ 7,025.00	$ 6,500.00	$ 6,500.00
370	1	EA	20" CL250 Gate Valves, cip.	$ 16,755.00	$ 16,755.00	$ 16,190.00	$ 16,190.00
375	1	EA	24" CL250 Gate Valves, cip.	$ 23,750.00	$ 23,750.00	$ 23,250.00	$ 23,250.00
380	1	EA	12" CL250 Butterfly Valves, cip.	$ 2,800.00	$ 2,800.00	$ 2,800.00	$ 2,800.00
385	1	EA	16" CL250 Butterfly Valves, cip.	$ 4,975.00	$ 4,975.00	$ 4,850.00	$ 4,850.00
390	1	EA	20" CL250 Butterfly Valves, cip.	$ 7,680.00	$ 7,680.00	$ 6,600.00	$ 6,600.00
395	1	EA	24" CL250 Butterfly Valves, cip.	$ 10,042.50	$ 10,042.50	$ 9,125.00	$ 9,125.00
400	5	EA	Fire Hydrant, 5' or less bury, cip.	$ 2,987.50	$ 14,937.50	$ 3,200.00	$ 16,000.00
405	2	EA	Fire Hydrant Extension, 6" or 12" length	$ 767.50	$ 1,535.00	$ 700.00	$ 1,400.00
410	1	EA	Fire Hydrant Extension, 18" or 24" length	$ 1,017.50	$ 1,017.50	$ 920.00	$ 920.00
415	1	EA	Fire Hydrant Remove & Relay	$ 1,350.00	$ 1,350.00	$ 700.00	$ 700.00
420	1	EA	Fire Hydrant Remove & Return	$ 887.50	$ 887.50	$ 575.00	$ 575.00
425	1	EA	2 1/4" Flush Hydrant	$ 1,657.50	$ 1,657.50	$ 1,500.00	$ 1,500.00
430	1	EA	2" Blow-Off Valve Installation	$ 1,420.00	$ 1,420.00	$ 1,300.00	$ 1,300.00
435	1	EA	2" Pressure Relief Valve, cip.	$ 6,780.00	$ 6,780.00	$ 6,725.00	$ 6,725.00
440	1	EA	3" Pressure Relief Valve, cip.	$ 7,065.50	$ 7,065.50	$ 6,950.00	$ 6,950.00
445	1	EA	4" Pressure Relief Valve, cip.	$ 8,432.50	$ 8,432.50	$ 8,195.00	$ 8,195.00
450	1	EA	6" Pressure Relief Valve, cip.	$ 11,091.50	$ 11,091.50	$ 10,800.00	$ 10,800.00
455	1	EA	8" Pressure Relief Valve, cip.	$ 15,362.50	$ 15,362.50	$ 14,925.00	$ 14,925.00
460	1	EA	12" Pressure Relief Valve, cip.	$ 29,837.50	$ 29,837.50	$ 29,500.00	$ 29,500.00
465	1	EA	Air & Vacuum Release Valve, 1"	$ 2,970.00	$ 2,970.00	$ 2,750.00	$ 2,750.00
470	1	EA	Air & Vacuum Release Valve, 2"	$ 4,245.00	$ 4,245.00	$ 3,940.00	$ 3,940.00
475	1	EA	Install City of Santa Fe Furnished Valve/Meter, 2" - 4"	$ 825.00	$ 825.00	$ 450.00	$ 450.00
480	1	EA	Install City of Santa Fe Furnished Valve/Meter, 6" - 8"	$ 1,025.00	$ 1,025.00	$ 550.00	$ 550.00
485	1	EA	Install City of Santa Fe Furnished Valve/Meter, 10"-12"	$ 1,275.00	$ 1,275.00	$ 750.00	$ 750.00
490	1	EA	Metered 2" Bypass – Vault Installation	$ 4,000.00	$ 4,000.00	$ 3,185.00	$ 3,185.00
495	20	EA	Valve Box, cip.	$ 575.00	$ 11,500.00	$ 625.00	$ 12,500.00
500	5	EA	Valve Box Replacement	$ 750.00	$ 3,750.00	$ 775.00	$ 3,875.00
505	5	EA	Valve Box Removal of Existing	$ 425.00	$ 2,125.00	$ 325.00	$ 1,625.00
510	3	EA	Valve Box Adjustment	$ 600.00	$ 1,800.00	$ 550.00	$ 1,650.00
515	1	EA	Valve Stem Extension, 0'-4' Depth	$ 200.00	$ 200.00	$ 250.00	$ 250.00
520	4	VF	Precast 4' Diameter Pit w/ Lid Min. 4' Depth	$ 925.00	$ 3,700.00	$ 825.00	$ 3,300.00
525	8	VF	Precast 6' Diameter Pit w/ Lid Min. 4' Depth	$ 1,000.00	$ 8,000.00	$ 1,050.00	$ 8,400.00
530	8	VF	Precast 8' Diameter Pit w/ Lid Min. 4' Depth	$ 1,500.00	$ 12,000.00	$ 1,075.00	$ 8,600.00
535	7	CY	Cast-In-Place RCP Vault w/ Lid	$ 1,000.00	$ 7,000.00	$ 1,025.00	$ 7,175.00
540	1	EA	Prefabricated Vault, 4' X 8'	$ 8,900.00	$ 8,900.00	$ 8,995.00	$ 8,995.00

				AAC		Sub Surface	
Bid Item	Approx. QTY.	Unit	Article and Description	Unit Price	Item Price	Unit Price	Item Price
545	1	ACRE	Native Seeding	$ 2,600.00	$ 2,600.00	$ 2,275.00	$ 2,275.00
550	1	EA	Bollards (pair)	$ 1,180.00	$ 1,180.00	$ 975.00	$ 975.00
555	18	LF	4" Steel Casing	$ 31.37	$ 564.66	$ 95.00	$ 1,710.00
560	18	LF	4" PVC Casing	$ 15.40	$ 277.20	$ 75.00	$ 1,350.00
565	18	LF	14" Steel Casing	$ 107.43	$ 1,933.74	$ 175.00	$ 3,150.00
570	18	LF	16" Steel Casing	$ 124.02	$ 2,232.36	$ 200.00	$ 3,600.00
575	18	LF	18" Steel Casing	$ 144.03	$ 2,592.54	$ 275.00	$ 4,950.00
580	18	LF	22" Steel Casing	$ 234.94	$ 4,228.92	$ 300.00	$ 5,400.00
585	18	LF	26" Steel Casing	$ 290.67	$ 5,232.06	$ 400.00	$ 7,200.00
590	18	LF	28" Steel Casing	$ 187.04	$ 3,366.72	$ 450.00	$ 8,100.00
595	18	LF	30" Steel Casing	$ 187.04	$ 3,366.72	$ 450.00	$ 8,100.00
600	18	LF	36" Steel Casing	$ 287.03	$ 5,166.54	$ 500.00	$ 9,000.00
605	50	DIA-IN-LF	Bore & Jack Casing Pipe	$ 575.00	$ 28,750.00	$ 40.00	$ 2,000.00
610	18	LF	Open Cut Casing Pipe Installation, < 6' Deep	$ 62.00	$ 1,116.00	$ 39.00	$ 702.00
615	225	SY	Asphalt Pavement Removal & Disposal, <2"	$ 29.50	$ 737.50	$ 65.00	$ 1,625.00
620	200	SY	Asphalt Pavement Removal & Disposal, 2"-6"	$ 17.70	$ 3,540.00	$ 65.00	$ 13,000.00
625	10	SY	Concrete Pavement Removal & Disposal, <2"	$ 97.50	$ 975.00	$ 90.00	$ 900.00
630	10	SY	Concrete Pavement Removal & Disposal, 2"-6"	$ 132.50	$ 1,325.00	$ 95.00	$ 950.00
635	50	LF	Concrete Curb and Gutter Removal & Disposal	$ 12.00	$ 600.00	$ 25.00	$ 1,250.00
640	10	SY	Concrete Sidewalk Removal & Disposal	$ 65.00	$ 650.00	$ 30.00	$ 300.00
645	50	SY	Replace City Street Pavement w/o Laydown Machine, Virgin Asphalt	$ 74.50	$ 3,725.00	$ 75.00	$ 3,750.00
650	50	SY	Replace City Street Pavement w/o Laydown Machine, Recycled Asphalt	$ 74.50	$ 3,725.00	$ 75.00	$ 3,750.00
655	50	SY	Replace City Street Pavement with Laydown Machine, Virgin Asphalt	$ 72.00	$ 3,600.00	$ 75.00	$ 3,750.00
660	10	SY	Replace City Street Pavement with Laydown Machine, Recycled Asphalt	$ 84.96	$ 849.60	$ 75.00	$ 750.00
665	10	SY	Replace City Street Pavement with Temporary Cold Mix	$ 167.56	$ 1,675.60	$ 75.00	$ 750.00
670	100	SY	Replace Non-City Street Pavement w/o Laydown Machine, Virgin Asphalt	$ 74.50	$ 7,450.00	$ 75.00	$ 7,500.00
675	10	SY	Replace Non-City Street Pavement w/o Laydown Machine, Recycled Asphalt	$ 74.50	$ 745.00	$ 75.00	$ 750.00
680	10	SY	Replace Non-City Street Pavement with Laydown Machine, Virgin Asphalt	$ 92.00	$ 920.00	$ 75.00	$ 750.00
685	10	SY	Replace Non-City Street Pavement with Laydown Machine, Recycled Asphalt	$ 92.00	$ 920.00	$ 75.00	$ 750.00
690	1	SY	Replace Non-City Street Pavement with Temporary Cold Mix	$ 167.56	$ 167.56	$ 75.00	$ 75.00
695	10	SY	Replace Concrete Pavement	$ 261.50	$ 2,615.00	$ 275.00	$ 2,750.00
700	50	LF	Replace Concrete Curb & Gutter	$ 45.00	$ 2,250.00	$ 45.00	$ 2,250.00
705	10	SY	Replace Concrete Sidewalk	$ 155.00	$ 1,550.00	$ 170.00	$ 1,700.00
710	10	CY	Replace Gravel Surface, 0"-2"	$ 56.00	$ 560.00	$ 85.00	$ 850.00
715	10	CY	Replace Gravel Surface, 2"-4"	$ 66.00	$ 660.00	$ 120.00	$ 1,200.00
720	150	SY	Base course/Gravel (crushed or landscape), 0"-3"	$ 34.00	$ 5,100.00	$ 35.00	$ 5,250.00
725	50	SY	Base course/Gravel (crushed or landscape), 3"-6"	$ 45.00	$ 2,250.00	$ 45.00	$ 2,250.00
730	4	EA	Service, 3/4" Single, New Main	$ 1,262.50	$ 5,050.00	$ 1,475.00	$ 5,900.00
735	2	EA	Service, 3/4" Double, New Main	$ 1,662.50	$ 3,325.00	$ 1,775.00	$ 3,550.00
740	2	EA	Service, 1", New Main	$ 1,887.50	$ 3,775.00	$ 1,825.00	$ 3,650.00
745	1	EA	Service, 1 1/2", New Main	$ 3,670.00	$ 3,670.00	$ 3,450.00	$ 3,450.00
750	1	EA	Service, 2", New Main	$ 3,985.00	$ 3,985.00	$ 3,870.00	$ 3,870.00
755	5	EA	Service, 3/4" Single, Existing Main	$ 1,450.00	$ 7,250.00	$ 1,475.00	$ 7,375.00
760	2	EA	Service, 3/4" Double, Existing Main	$ 1,912.50	$ 3,825.00	$ 1,775.00	$ 3,550.00
765	1	EA	Service, 1", Existing Main	$ 1,900.00	$ 1,900.00	$ 1,825.00	$ 1,825.00
770	1	EA	Service, 1 1/2", Existing Main	$ 3,670.00	$ 3,670.00	$ 3,450.00	$ 3,450.00
775	1	EA	Service, 2", Existing Main	$ 4,300.00	$ 4,300.00	$ 3,870.00	$ 3,870.00
780	5	EA	Service Replacement, 3/4"	$ 1,602.50	$ 8,012.50	$ 1,475.00	$ 7,375.00
785	2	EA	Service Replacement, Double, 3/4"	$ 1,950.00	$ 3,900.00	$ 1,775.00	$ 3,550.00
790	1	EA	Service Replacement, 1"	$ 2,100.00	$ 2,100.00	$ 1,825.00	$ 1,825.00

Bid Item	Approx. QTY.	Unit	Article and Description	AAC		Sub Surface	
				Unit Price	Item Price	Unit Price	Item Price
795	1	EA	Service Replacement, 1 1/2"	$ 3,875.00	$ 3,875.00	$ 3,450.00	$ 3,450.00
800	1	EA	Service Replacement, 2"	$ 4,512.00	$ 4,512.00	$ 3,870.00	$ 3,870.00
805	3	EA	Meter Box Relocation/Replacement, 3/4"	$ 1,000.00	$ 3,000.00	$ 895.00	$ 2,685.00
810	1	EA	Meter Box Relocation/Replacement, 1"	$ 1,150.00	$ 1,150.00	$ 915.00	$ 915.00
815	1	EA	Meter Box Relocation/Replacement, 1-1/2"	$ 1,800.00	$ 1,800.00	$ 1,400.00	$ 1,400.00
820	1	EA	Meter Box Relocation/Replacement, 2"	$ 1,900.00	$ 1,900.00	$ 1,400.00	$ 1,400.00
825	5	EA	Service Transfer, 3/4"	$ 812.50	$ 4,062.50	$ 725.00	$ 3,625.00
830	2	EA	Service Transfer, 1"	$ 912.50	$ 1,825.00	$ 825.00	$ 1,650.00
835	1	EA	Service Transfer, 1 1/2"	$ 1,112.50	$ 1,112.50	$ 925.00	$ 925.00
840	1	EA	Service Transfer at Main, 2"	$ 1,325.00	$ 1,325.00	$ 975.00	$ 975.00
845	1	EA	Retire Existing Service at Main, 3/4"- 2"	$ 962.50	$ 962.50	$ 725.00	$ 725.00
850	1	EA	Retire Existing Meter Box & Setting	$ 437.50	$ 437.50	$ 525.00	$ 525.00
855	1	EA	Adjust Meter Box To Grade	$ 412.50	$ 412.50	$ 425.00	$ 425.00
860	11	EA	Service Saddle, 3/4" Tap, 4"-12" Main	$ 500.00	$ 5,500.00	$ 650.00	$ 7,150.00
865	4	EA	Service Saddle, 1" Tap, 4"-12" Main	$ 462.50	$ 1,850.00	$ 675.00	$ 2,700.00
870	3	EA	Service Saddle, 1 1/2" Tap, 4"-12" Main	$ 562.50	$ 1,687.50	$ 750.00	$ 2,250.00
875	3	EA	Service Saddle, 2" Tap, 4"-12" Main	$ 650.00	$ 1,950.00	$ 775.00	$ 2,325.00
880	100	LF	Service Tubing, 3/4"	$ 28.75	$ 2,875.00	$ 31.50	$ 3,150.00
885	100	LF	Service Tubing, 1"	$ 34.12	$ 3,412.00	$ 33.75	$ 3,375.00
890	100	LF	Service Tubing, 1 1/2"	$ 46.50	$ 4,650.00	$ 44.00	$ 4,400.00
895	25	LF	Service Tubing, 2"	$ 65.50	$ 1,637.50	$ 53.00	$ 1,325.00
900	1	EA	Air and Vacuum Valve (individual)	$ 450.00	$ 450.00	$ 1,550.00	$ 1,550.00
905	1	GROUP OF 10	Air and Vacuum Valves	$ 8,045.00	$ 8,045.00	$ 15,500.00	$ 15,500.00
910	1	EA	Automatic Flushing Valve	$ 5,867.50	$ 5,867.50	$ 4,350.00	$ 4,350.00
915	$20,000	%	Materials Mark-Up Over Invoice	$ 3,600.00	$ 3,600.00	$ 1,500.00	$ 1,500.00
920	$8,000	%	Traffic Control Mark-Up Over Invoice	$ 1,440.00	$ 1,440.00	$ 1,200.00	$ 1,200.00
925	1	Allow.	Street-Cut Permits	$ 175.00	$ 175.00	$ 375.00	$ 375.00
930	1	EA	Project Signs	$ 675.00	$ 675.00	$ 450.00	$ 450.00
935	10	HR	Archeological Required Delay (after 2 hrs)	$ 250.00	$ 2,500.00	$ 185.00	$ 1,850.00
940	1	LS	Archeological Required Mob/Demob	$ 725.00	$ 725.00	$ 700.00	$ 700.00
EMERGENCY REPAIR					$ -		$ -
9000	175	HR	Supervisor's Truck with tools	$ 35.00	$ 6,125.00	$ 30.00	$ 5,250.00
9100	80	HR	Backhoe/Skid Steer	$ 57.00	$ 4,560.00	$ 58.00	$ 4,640.00
9200	8	HR	Compressor with tools	$ 54.00	$ 432.00	$ 35.00	$ 280.00
9300	16	HR	Dump Truck	$ 65.00	$ 1,040.00	$ 60.00	$ 960.00
9400	4	HR	Pump	$ 25.00	$ 100.00	$ 15.00	$ 60.00
9500	300	HR	Laborer	$ 42.50	$ 12,750.00	$ 43.00	$ 12,900.00
9600	200	HR	Pipe Fitter	$ 44.50	$ 8,900.00	$ 45.00	$ 9,000.00
9700	200	HR	Equipment Operator	$ 57.50	$ 11,500.00	$ 58.00	$ 11,600.00
9800	175	HR	Foreman	$ 59.50	$ 10,412.50	$ 60.00	$ 10,500.00
9900	$5,000	%	Rental Items Mark-Up Over Invoice (multiply $5,000 x your % for Item Price)	$ 1,000.00	$ 1,000.00	$ 900.00	$ 900.00
9950	$20,000	%	Materials Mark-Up Over Invoice (multiply $20,000 x your % for Item Price)	$ 3,600.00	$ 3,600.00	$ 1,500.00	$ 1,500.00

City of Santa Fe

Real Estate Summary of Contracts, Agreements, Amendments & Leases

Section to be completed by department

1. Munis Contract # 3202927

Contractor: A.A.C Construction

Description: CIP# 3058 Priority Line Repl acement

Contract ☐ Agreement ☉ Lease / Rent ☐ Amendment ☐

Term Start Date: as approved Term End Date: 6/30/25

☑ Approved by Council Date: Pending

Contract / Lease: Contract $1,250,000

Amendment # _____ to the Original Contract / Lease # _____

Increase/(Decrease) Amount $ _____

Extend Termination Date to: _____

☐ Approved by Council Date: _____

Amendment is for:

2. **HISTORY** of Contract, Amendments & Lease / Rent - Please Elaborate (option: attach spreadsheet if multiple amendments)

3. Procurement History: 21/43/B

Aug 23, 2021

Purchasing Officer Review: Date:

Comment & Exceptions: Issuance of award from ITB 21/73/B issued. 1st. year.

4. Funding Source: Water Enterprise Fund CIP Org / Object: 5050395.572970

Andy Hopkins

Aug 23, 2021

Budget Officer Approval: Date:

Comment & Exceptions: _____

Staff Contact who completed this form: Maya Martinez Phone # 4271

Email: mfmartinez@santafenm.gov

To be recorded by City Clerk:

Clerk # _____

Date of Execution: _____

CERTIFICATE OF LIABILITY INSURANCE

DATE (MM/DD/YYYY): 06/14/2021

THIS CERTIFICATE IS ISSUED AS A MATTER OF INFORMATION ONLY AND CONFERS NO RIGHTS UPON THE CERTIFICATE HOLDER. THIS CERTIFICATE DOES NOT AFFIRMATIVELY OR NEGATIVELY AMEND, EXTEND OR ALTER THE COVERAGE AFFORDED BY THE POLICIES BELOW. THIS CERTIFICATE OF INSURANCE DOES NOT CONSTITUTE A CONTRACT BETWEEN THE ISSUING INSURER(S), AUTHORIZED REPRESENTATIVE OR PRODUCER, AND THE CERTIFICATE HOLDER.

IMPORTANT: If the certificate holder is an ADDITIONAL INSURED, the policy(ies) must have ADDITIONAL INSURED provisions or be endorsed. If SUBROGATION IS WAIVED, subject to the terms and conditions of the policy, certain policies may require an endorsement. A statement on this certificate does not confer rights to the certificate holder in lieu of such endorsement(s).

PRODUCER	CONTACT NAME: Susan Vance	
Downey & Company 6565 AMERICAS PARKWAY NE SUITE 750 ALBUQUERQUE NM 87110	PHONE (A/C, No, Ext): (505) 881-0300	FAX (A/C, No): (505) 881-0908
	E-MAIL ADDRESS: svance@downeyandco.com	
	INSURER(S) AFFORDING COVERAGE	NAIC #
	INSURER A: Donegal Insurance Group	
INSURED A.A.C. Construction, LLC 18 La Luna Rd Santa Fe NM 87507	INSURER B: New Mexico Mutual Casualty Company	
	INSURER C:	
	INSURER D:	
	INSURER E:	
	INSURER F:	

COVERAGES **CERTIFICATE NUMBER:** 2021-2022 **REVISION NUMBER:**

THIS IS TO CERTIFY THAT THE POLICIES OF INSURANCE LISTED BELOW HAVE BEEN ISSUED TO THE INSURED NAMED ABOVE FOR THE POLICY PERIOD INDICATED. NOTWITHSTANDING ANY REQUIREMENT, TERM OR CONDITION OF ANY CONTRACT OR OTHER DOCUMENT WITH RESPECT TO WHICH THIS CERTIFICATE MAY BE ISSUED OR MAY PERTAIN, THE INSURANCE AFFORDED BY THE POLICIES DESCRIBED HEREIN IS SUBJECT TO ALL THE TERMS, EXCLUSIONS AND CONDITIONS OF SUCH POLICIES. LIMITS SHOWN MAY HAVE BEEN REDUCED BY PAID CLAIMS.

INSR LTR	TYPE OF INSURANCE	ADDL INSD	SUBR WVD	POLICY NUMBER	POLICY EFF (MM/DD/YYYY)	POLICY EXP (MM/DD/YYYY)	LIMITS	
A	[X] COMMERCIAL GENERAL LIABILITY [ ] CLAIMS-MADE [X] OCCUR GEN'L AGGREGATE LIMIT APPLIES PER: [ ] POLICY [X] PRO-JECT [ ] LOC [ ] OTHER:			CPT9030765	01/01/2021	01/01/2022	EACH OCCURRENCE DAMAGE TO RENTED PREMISES (Ea occurrence) MED EXP (Any one person) PERSONAL & ADV INJURY GENERAL AGGREGATE PRODUCTS - COMP/OP AGG [ ]	$ 1,000,000 $ 100,000 $ 5,000 $ 1,000,000 $ 2,000,000 $ 2,000,000 $
A	AUTOMOBILE LIABILITY [X] ANY AUTO [ ] OWNED AUTOS ONLY [ ] SCHEDULED AUTOS [X] HIRED AUTOS ONLY [X] NON-OWNED AUTOS ONLY [ ]			CA9030765	01/01/2021	01/01/2022	COMBINED SINGLE LIMIT (Ea accident) BODILY INJURY (Per person) BODILY INJURY (Per accident) PROPERTY DAMAGE (Per accident) [ ]	$ 1,000,000 $ $ $ $
A	[X] UMBRELLA LIAB [X] OCCUR EXCESS LIAB [ ] CLAIMS-MADE [ ] DED [X] RETENTION $ 0			CXL9030765	01/01/2021	01/01/2022	EACH OCCURRENCE AGGREGATE [ ]	$ 3,000,000 $ 3,000,000 $
B	WORKERS COMPENSATION AND EMPLOYERS' LIABILITY ANY PROPRIETOR/PARTNER/EXECUTIVE OFFICER/MEMBER EXCLUDED? (Mandatory in NH) Y/N [Y] If yes, describe under DESCRIPTION OF OPERATIONS below	N/A		93890.105	01/01/2021	01/01/2022	[X] PER STATUTE [ ] OTH-ER E.L. EACH ACCIDENT E.L. DISEASE - EA EMPLOYEE E.L. DISEASE - POLICY LIMIT	 $ 500,000 $ 500,000 $ 500,000

DESCRIPTION OF OPERATIONS / LOCATIONS / VEHICLES (ACORD 101, Additional Remarks Schedule, may be attached if more space is required)

CERTIFICATE HOLDER

CITY OF SANTA FE WATER DIVISION
801 W. SAN MATEO ROAD
SANTA FE NM 87505

CANCELLATION

SHOULD ANY OF THE ABOVE DESCRIBED POLICIES BE CANCELLED BEFORE THE EXPIRATION DATE THEREOF, NOTICE WILL BE DELIVERED IN ACCORDANCE WITH THE POLICY PROVISIONS.

AUTHORIZED REPRESENTATIVE

Susan J. Vance

© 1988-2015 ACORD CORPORATION. All rights reserved.

The ACORD name and logo are registered marks of ACORD

of the Contractor are in addition to his obligations under Paragraph 4.18.

10.2.6 The Contractor shall designate a responsible member of his organization at the site whose duty shall be the prevention of accidents. This person shall be the Contractor's Superintendent unless otherwise designated by the Contractor in writing to the City of Santa Fe and the City of Santa Fe's Representative.

10.2.7 The Contractor shall not load or permit any part of the work to be loaded so as to endanger its safety.

10.3 EMERGENCIES

10.3.1 In any emergency affecting the safety of persons or property, the Contractor shall act, at his reasonable discretion, to prevent threatened damage, injury or loss. Any additional compensation or extension of time claimed by the Contractor on account of emergency work shall be determined as provided in Article 12 for changes in the work.

ARTICLE 11

INSURANCE

11.1 CONTRACTOR'S LIABILITY INSURANCE

11.1.1. The Contractor shall carry insurance to protect the City of Santa Fe from and against all claims, demands, actions, judgments, costs, expenses and liabilities which may arise or result directly or indirectly from or by reasons of loss, injury or damage related to the Project. The Contractor shall file with the City of Santa Fe current certificates evidencing public liability insurance with limits as provided in the New Mexico Tort Claims Act, Section 41-4-19 NMSA 1978, and as that section or successors section may be amended from time to time. The contractor shall also carry such insurance as it deems necessary to protect it from all claims under any workmen's compensation law in effect that may be applicable to the Contractor. All insurance required by this Agreement shall be kept and remain in full force and effect for the entire life of this Agreement.

11.1.2. The insurance coverage shall include worker's compensation, employer's liability, comprehensive general liability (Premises-Operations, independent contractors, products and completed operations, broad form property damage, contractual liability, explosion and collapse hazard, underground Hazard, personal injury) comprehensive automobile liability (owned and hired), excess liability (umbrella form), and all-risk builder's risk.

11.1.3. All insurance coverage must be maintained for the entire life of the Project. Products and completed operations coverage shall be maintained for a minimum period of one (1) year after final payment.

11.1.4. A valid certificate of insurance must be submitted to the City of Santa Fe prior to issuance of a Notice-to-Proceed.

Type of Required Coverage	Minimum Limits of Liability
Workman's compensation (including accident and occupational disease coverage)	Statutory
Employer's Liability	$100,000
Comprehensive General Liability (including endorsements providing broad form property damage coverage, personal injury coverage, and contractual assumption of liability coverage for all liability the Contractor has assumed under his Contract).	Bodily injury liability: $500,000 each occurrence; $1,000,000 aggregate. Property damage liability: $500,000 each occurrence; $1,000,000 aggregate.
Auto Liability (including non-owned auto coverage)	Bodily injury liability: $500,000 each person; $1,000,000 each occurrence. Property damage liability: $1,000,000 each occurrence

11.1.5 Certificates of Insurance acceptable to the City of Santa Fe shall be filed with the City of Santa Fe prior to

commencement of the work. These Certificates shall contain a provision that coverage afforded under the policies will not be canceled until at least thirty days' prior written notice has been given to the City of Santa Fe. The Contractor shall furnish one (1) copy of each of the Certificates of insurance herein required for each copy of the Contract.

11.2 CITY OF SANTA FE'S LIABILITY INSURANCE

11.2.1 The City of Santa Fe shall be responsible for purchasing and maintaining his own liability insurance and, at his option, may purchase and maintain such insurance as will protect him against all claims which may arise from operations under the Contract.

11.3 PROPERTY INSURANCE

11.3.1 The Contractor shall maintain traditional course of construction insurance upon the work at the site for at least the actual cash value thereof. The traditional course of construction insurance shall cover the interests of the City of Santa Fe, the Contractor, Subcontractors, and Sub-subcontractors in the work. The insurance shall insure against at least the following perils: fire extended coverage, vandalism, malicious mischief, and flood insurance with a deductible of no more than $25,000. The Contractor shall bear the cost of such insurance and include its cost in the Bid.

11.3.2 Any loss insured under Subparagraph 11.3.1 is to be adjusted with the City of Santa Fe and made payable to the City of Santa Fe as trustee for the insured, as their interests may appear subject to the requirements of any applicable mortgage clause. The City of Santa Fe shall deposit the proceeds in a separate account and shall distribute them in accordance with such agreement as the parties in interest, including the City of Santa Fe, may reach. The Contractor shall pay each Subcontractor a just share of any insurance proceeds which the Contractor receives and shall require by written agreement signed by the Subcontractor that the Subcontractor will make payments to his Sub-subcontractors in a similar manner. If after such loss no other special agreement is made, replacement of damaged work shall be covered by an appropriate order.

11.3.3 To the extent permitted under their respective property insurance policies, the City of Santa Fe and the Contractor hereby waive all rights, each against the other, for damages caused by fire or other perils to the extent covered by Insurance obtained pursuant to this Article 11 or any other property insurance applicable to the work, except such rights as they may have to the proceeds of such Insurance held by the City of Santa Fe as trustee. The City of Santa Fe or the Contractor, as appropriate, shall require the City of Santa Fe's Representative, other Contractors, Subcontractors, and Sub-subcontractors to similarly waive rights of subrogation or property insurers.

11.3.4 If the City of Santa Fe finds it necessary to occupy use of any portion of the work prior to Substantial Completion, such occupancy or use shall not commence prior to the time mutually agreed to by the City of Santa Fe and the Contractor and, if required by the applicable insurance or self-insurance coverage not prior to the time the builder's risk property insurer has consented to such occupancy or use. The Contractor's consent to such occupancy or use shall not be unreasonably withheld.

11.4 LOSS OF USE INSURANCE

11.4.1 The City of Santa Fe, at his option, may purchase and maintain such insurance as will insure him against loss of use of his property due to fire or other hazards, however caused.

City of Santa Fe

Treasury Department
200 Lincoln Ave.
Santa Fe, New Mexico 87504-0909
505-955-6551

BUSINESS REGISTRATION

Business Name: A.A.C. CONSTRUCTION LLC
DBA: A.A.C. CONSTRUCTION LLC

Business Location: 18 LA LUNA RD
SANTA FE, NM 87507

CRS Number: 03157349-00-5

Owner: Andrew Sisneros

License Number: 222939

License Type: Business License - Renewable

Issued Date: June 07, 2021

Classification: Out of Jurisdiction Contractor - General

Expiration Date: June 07, 2022

Fees Paid: $10.00

A.A.C. CONSTRUCTION LLC
18 LA LUNA RD LA LUNA
SANTA FE , NM 87507

THIS IS NOT A CONSTRUCTION PERMIT OR SIGN PERMIT. APPROPRIATE PERMITS MUST BE OBTAINED FROM THE CITY OF SANTA FE BUILDING PERMIT DIVISION PRIOR TO COMMENCEMENT OF ANY CONSTRUCTION OR THE INSTALLATION OF ANY EXTERIOR SIGN.

THIS REGISTRATION/LICENSE IS NOT TRANSFERRABLE TO OTHER BUSINESSES OR PREMISES.

TO BE POSTED IN A CONSPICUOUS PLACE

Ver 16 2/7/2020

CITY OF SANTA FE PROCUREMENT CHECKLIST

Contractor Name: A.A.C Contractors

Procurement Title: 21/43/B Priority Line Replacement Price Agreement, CIP # 3058

Procurement Method: State Price Agreement ☐ *Cooperative* ☐ *Sole Source* ☐ *Other* ☐ _____

Exempt ☐ *Request For Proposal (RFP)* ☒ *Invitation To Bid (ITB)* ☐ *Contract under 60K* ☐ *Contract over 60K* ☐

Department Requesting Bill Huey Water Division, PUD

Procurement Requirements:
A procurement file shall be maintained for all contracts, regardless of the method of procurement. The procurement file shall contain the basis on which the award is made, all submitted bids, all evaluation materials, score sheets, quotations and all other documentation related to or prepared in conjunction with evaluation, negotiation, and the award process. The procurement shall contain a written determination from the Requesting Department, signed by the purchasing officer, setting forth the reasoning for the contract award decision before submitting to the Committees. .

REQUIRED DOCUMENTS FOR APPROVAL BY PURCHASING*

YES	N/A	
☒	☐	Approved Procurement Checklist (by Purchasing)
☒	☐	Memo addressed to City Manager (under 60K) Committees/City Council (over 60K)
☐	☒	State Price Agreement
☐	☒	RFP
☐	☒	Evaluation Committee Report
☒	☐	ITB
☒	☐	Bib Tab
☐	☒	Quotes (3 valid current quotes)
☐	☒	Cooperative Agreement
☐	☒	Sole Source Request and Determination Form
☐	☒	Contractors Exempt Letter
☒	☐	Purchasing Officers approval for exempt procurement
☐	☒	BAR
☐	☒	FIR
☒	☐	Executed Contract, Agreement or Amendment
☒	☐	Current Business Registration and CRS numbers on contract or agreement
☒	☐	Summary of Contracts and Agreements form
☐	☒	Certificate of Insurance
☐	☐	All documentation presented to Committees
☐	☐	Other: _____

Public Utilities Dept / Water Division/Bill Huey (Bill Huey)	Engineer	8/17/21
Department Rep Printed Name (attesting that all information included)	Title	Date
Fran Dunaway (Aug 23, 2021 12:29 MDT)	Chief Procurement Officer	Aug 23, 2021
Purchasing Officer (attesting that all information is reviewed)	Title	Date

Include all other substantive documents and records of communication that pertain to the procurement and any resulting contract.

*

City of Santa Fe, New Mexico

memo

Date: March 28, 2023

To: Finance Committee / Public Works-Public Utilities Committee

Via: Emily Oster, Finance Director EKO
Travis Dutton-Leyda, Chief Procurement Officer TDL
John Dupuis, Public Utilities Department Director
Jesse D. Roach, Water Division Director

From: Michael R. Moya, T&D Section Manager MM
Bill Huey, Water Division Engineer Associate BH

RE: Request to add funds to bid number '21/43/B for the FY 2223 Priority Line Replacement Price Agreement, CIP # 3058 A.A.C. Construction, LLC. in the amount of $2,210,000.00 including NMGRT for the remainder of the contract term (FY2024-25). Approval of the BAR – Budget Increase in the amount of $5,000,000

ITEM AND ISSUE:

The Water Division requests increasing the amount of award for bid number '21/43/B for Priority Line Replacement Price Agreement, CIP # 3058 to A.A.C. Construction, LLC by $2,210,000.00 inclusive of NMGRT for the remaining three (3) Fiscal Years, FY 2022-23 until FY2024-25.

Approval of the BAR – Budget Increase in the amount of $5,000,000 from the Water Enterprise Fund cash balance into the Water CIP fund, of which $2,210,000 is for this amendment.

BACKGROUND AND SUMMARY:

City Council has awarded bid number '21/43/B for the Priority Line Replacement Price Agreement, CIP # 3058 to Sub Surface Contracting, Inc. (Sub Surface) and A.A.C. Construction, LLC (AAC) for four (4) Fiscal Years, FY 2021-22 until FY2024-25 in the amount of $3,500,000 inclusive of NMGRT. Future funding was dependent upon the availability of CIP funds.

The Priority Line Replacement Price Agreement is an on-call requirements contract, with the Water Division issuing work orders as needed for work such as water line replacements. The contract is funded from CIP for Transmission and Distribution to work on their infrastructure.

Current expenditures on this contract are still at or below the initial contract amount. Current work on the contract will need additional funds. The contract funding needed for the completion of the contract term for AAC is $2,210,000.00 inclusive of NMGRT. Total funding for the entire contract with AAC will be $3,460,000 inclusive of NMGRT.

The attached BAR/Increase will provide funding for this AAC PLR Amendment #1 in the amount of $2,210,000 and the following Agenda Item Sub Surface PLR Amendment #1 in the amount of $2,790,000 for a combined amount of $5,000,000.

PROCUREMENT:
21/43/B for the FY 2022 Priority Line Replacement

CONTRACT NUMBER:

A.A.C Construction # 3202778.

FUNDING SOURCE:
The funding source is:
Water Enterprise Fund/ CIP
FY 2023
Fund Name/Number:: Water Enterprise Fund/ 500
Munis Org Name/Number: Water CIP / 5050395
Munis Object Name/Number: WIP Construction / 572970

RECOMMENDATION:

The Water Division recommends:

- Review and approval of increase of contract amount to A.A.C Construction, LLC for Priority Line Replacement Price Agreement, CIP # 3058 under ITB No. '21/43/B of $2,210,000.00 for a total amount of $3,460,000.00 inclusive of NMGRT through FY2024-25.

- Approval of the BAR/Increase to provide funding for this AAC PLR Amendment #1 in the amount of $2,210,000 and the following Agenda Item Sub Surface PLR Amendment #1 in the amount of $2,790,000 for a combined amount of $5,000,000.

Item# 21-0483
Munis Contract# 3202927

CITY OF SANTA FE

PRIORITY LINE REPLACEMENTPRICE
AGREEMENT

CIP # 3058

THIS AGREEMENT is made and entered into by and between the City of Santa Fe, New Mexico, hereinafter referred to as the "City," and **A.A.C. CONSTRUCTION**., hereinafter referred to as the Contractor, and is effective as of the date set forth below upon which it is executed by the Parties.

IT IS AGREED BETWEEN THE PARTIES:

1. **Scope of Work.**

A. The Contractor shall perform the following work and as described is Exhibit A attached hereto:

1) The Contractor shall perform all the work required by Water Division as required in the Contract Documents for Priority Line Replacement Contract. The work consists of, but is not limited to furnishing all equipment, labor and materials for the construction and repair of water mains, valves, hydrants, metered water service lines and settings, pressure reducing valves, vaults, and other incidental work such as pavement removal and replacement, traffic control all as required to extend, replace or repair water distribution, water storage, and water supply infrastructure, in accordance with the drawings, specifications, and other Contract Documents. All water piping shall be new, poly-wrapped ductile iron, unless otherwise specified.

2) The Contractor shall be responsible for verifications of all measurements and dimensions for bidding on each subsequent Work Order.

3) The Contractor shall provide and keep at the work site a complete "as built" record set of drawings that shall be corrected daily and shall show every change from the original approved drawings and specifications. These changes shall be forwarded to City periodically. The drawings shall reflect exact and actual "as-built" conditions of construction, installation, and erection as it progresses. Where drawings are not adequate to show "as built" conditions. Contractor shall prepare sketches which delineate the necessary "asbuilt" information. City shall furnish two (2) sets of all paper "blue-line" print "approved" drawings for use in accomplishing specified mark up. Final "as built" drawings shall be delivered to City by Contractor upon completion of the work.

4) The Contractor shall be responsible for maintaining traffic control at the site in conformance with the Manual on Uniform Traffic Control Devices.

5) The Contractor shall be responsible for all permits, fees, and State andCity inspections associated with the construction.

6) Incorporation by Reference. All exhibits, addenda, schedules of ITB 21/XX/B attached hereto and all certificates, work order documents, drawings, as-built and other

instruments contemplated to be delivered hereunder are hereby expressly made a part of this Agreement as fully as though set forth herein, and all references to this Agreement herein orin any of such writings shall be deemed to refer to and include all of such writings. This Agreement contains the entire agreement between the parties with respect to the subject matter hereof and supersedes all prior agreements and understandings, both written and oral, among the parties with respect to the subject matter hereof. If there is any conflict between such exhibits or addenda and the terms of this Agreement, such exhibits or addenda shall control.

2. Compensation.

A. The City shall pay to the Contractor in full payment for services satisfactorily performed at total amount up to one million one hundred fifty two thousand seven hundred thirty seven dollars and seventy-five cents ($1,152,737.75). The New Mexico gross receipts tax levied on the amounts payable under this Agreement totaling ninety seven thousand two hundred sixty two dollars and twenty five cents ($97,262.25) shall be paid by the City to the Contractor as described in Exhibit A attached hereto. **The total amount payable to the Contractor under this Agreement, including gross receipts tax and expenses, shall not exceed one million two hundred fifty thousand dollars ($1,250,000)). This amount is a maximum and not a guarantee that the work assigned to be performed by Contractor under this Agreement shall equal the amount stated herein. The parties do not intend for the Contractor to continue to provide services without compensation when the total compensation amount is reached. Contractor is responsible for notifying the City when the services provided under this Agreement reach the total compensation amount. In no event will the Contractor be paid for services provided in excess of the total compensation amount without this Agreement being amended in writing prior to those services in excess of the total compensation amount being provided.**

B. Payment is subject to availability of funds pursuant to the Appropriations Paragraph set forth below and to any negotiations between the parties from year to year pursuant to Paragraph 1, Scope of Work, and to approval by the City. All invoices MUST BE received by the City no later than thirty 30) days after the termination of the Fiscal Year in which the services were delivered. Invoices received after such date WILL NOT BE PAID.

C. Contractor must submit a detailed statement accounting for all services performed and expenses incurred. If the City finds that the services are not acceptable, within thirty days after the date of receipt of written notice from the Contractor that payment is requested, it shall provide the Contractor a letter of exception explaining the defect or objection to the services, and outlining steps the Contractor may take to provide remedial action. Upon certification by the City that the services have been received and accepted, payment shall be tendered to the Contractor within thirty days after the date of acceptance. If payment is made by mail, the payment shall be deemed tendered on the date it is postmarked. However, the City shall not incur late charges, interest, or penalties for failure to make payment within the time specified herein.

3. Term.

THIS AGREEMENT SHALL NOT BECOME EFFECTIVE UNTIL APPROVED BY THE CITY. This Agreement shall terminate on **June 30, 2025** unless terminated pursuant to paragraph 4 (Termination), or paragraph 5 (Appropriations). In accordance with Section 13-1-150 NMSA 1978, no contract term for a professional services contract, including extensions and renewals, shall exceed four years, except as set forth in Section 13-1-150 NMSA 1978.

4. Termination.

A. Termination. This Agreement may be terminated by either of the parties hereto upon written notice delivered to the other party at least thirty (30) days prior to the intended dateof termination. Except as otherwise allowed or provided under this Agreement, the City sole liability upon such termination shall be to pay for acceptable work performed prior to the Contractor's receipt

of the notice of termination, if the City is the terminating party, or the Contractors receipt of the notice of termination, if the Contractor is the terminating party; provided, however, that a notice of termination shall not nullify or otherwise affect either party'sliability for pre-termination defaults under or breaches of this Agreement. The Contractor shall submit an invoice for such work within thirty (30) days of receiving or sending the notice of termination. Notwithstanding the foregoing, this Agreement may be terminated immediately upon written notice to the Contractor if the Contractor becomes unable to perform the services contracted for, as determined by the City or if, during the term of this Agreement, the Contractor or any of its officers, employees or agents is indicted for fraud, embezzlement or other crime dueto misuse of City funds or due to the Appropriations paragraph herein. *THIS PROVISION JS NOT EXCLUSIVE AND DOES NOT WAIVE THE OTHER LEGAL RIGHTS AND REMEDIES CAUSED BY THE CONTRACTOR'S DEFAULT/BREACH OF THIS AGREEMENT.*

B. Termination Management. Immediately upon receipt by either the City or the Contractor of notice of termination of this Agreement, the Contractor shall: 1) not incur any further obligations for salaries, services or any other expenditure of funds under this Agreement withoutwritten approval of the City; 2) comply with all directives issued by the City in the notice oftermination as to the performance of work under this Agreement; and 3) take such action as the City shall direct for the protection, preservation, retention or transfer of all property titled to theCity and records generated under this Agreement. Any non-expendable personal property orequipment provided to or purchased by the Contractor with contract funds shall become property of the City upon termination and shall be submitted to the City as soon as practicable.

5. Appropriations.

The terms of this Agreement are contingent upon sufficient appropriations and authorization being made by the City Council for the performance of this Agreement. If sufficient appropriations and authorization are not made by the City Council, this Agreement shall terminate immediately upon written notice being given by the City to the Contractor. The City's decision asto whether sufficient appropriations are available shall be accepted by the Contractor and shall be final. If the City proposes an amendment to the Agreement to unilaterally reduce funding, the Contractor shall have the option to terminate the Agreement or to agree to the reduced funding, within thirty (30) days of receipt of the proposed amendment.

6. Status of Contractor.

The Contractor and its agents and employees are independent contractors performing professional services for the City and are not employees of the City. The Contractor and its agents and employees shall not accrue leave, retirement, insurance, bonding, use of City vehicles, or anyother benefits afforded to employees of the City as a result of this Agreement. The Contractor acknowledges that all sums received hereunder are reportable by the Contractor for tax purposes, including without limitation, self-employment and business income tax. The Contractor agrees not to purport to bind the City unless the Contractor has express written authority to do so, and then only within the strict limits of that authority.

7. Construction Contract Performance and Payment Bond.

A. When a construction contract is awarded in excess of twenty-five thousand dollars ($25,000), the following bonds or security shall be delivered to the City and shall become binding on the parties upon the execution of the contract. If the Contractor fails to deliver the required performance and payment bonds, the Contractor's bid shall be rejected, its bid security shall be enforced to the extent of actual damages. Award of the contract shall be made pursuant to the Procurement Code in the following manner:

(1) a performance bond satisfactory to the City, executed by a surety company

authorized to do business in this state and said surety to be approved in federal circular 570 as published by the United States treasury department or the state board of finance or the local governing authority, in an amount equal to one hundred percent of the price specifiedin the contract; and

(2) a payment bond satisfactory to the City, executed by a surety company authorized to do business in this state and said surety to be approved in federal circular 570 as published by the United States treasury department or the state board of finance or the local governing authority, in an amount equal to one hundred percent of the price specifiedin the contract, for the protection of all persons supplying labor and material to the contractor or its subcontractors for the performance of the work provided for in the contract.

B. A subcontractor shall provide a performance and payment bond on a public works Building project if the subcontractor's contract for work to be performed on a project is one hundred twenty-five thousand dollars ($125,000) or more.

8. Assignment.

The Contractor shall not assign or transfer any interest in this Agreement or assign any claims for money due or to become due under this Agreement without the prior written approval of the City.

9. Subcontracting.

The Contractor shall not subcontract any portion of the services to be performed under this Agreement without the prior written approval of the City. No such subcontract shall relieve the primary Contractor from its obligations and liabilities under this Agreement, nor shall any subcontract obligate direct payment from the City.

10. Release.

Final payment of the amounts due under this Agreement shall operate as a release of the City, its officers and employees from all liabilities, claims and obligations whatsoever arising from or under this Agreement.

11. Confidentiality.

Any confidential information provided to or developed by the Contractor in the performance of this Agreement shall be kept confidential and shall not be made available to any individual or organization by the Contractor without the prior written approval of the City.

12. Product of Service — Copyright.

All materials developed or acquired by the Contractor under this Agreement shall becomethe property of the City and shall be delivered to the City no later than the termination date of this Agreement. Nothing developed or produced, in whole or in part, by the Contractor under this Agreement shall be the subject of an application for copyright or other claim of ownership by or on behalf of the Contractor.

13. Conflict of Interest; Governmental Conduct Act.

A. The Contractor represents and warrants that it presently has no interest and, duringthe term of this Agreement, shall not acquire any interest, direct or indirect, which would conflictin any manner or degree with the performance or services required under the Agreement.

B. The Contractor further represents and warrants that it has complied with, and, during the term of this Agreement, will continue to comply with, and that this Agreement complies with all applicable

provisions of the Governmental Conduct Act, Chapter 10, Article 16 NMSA 1978.

C. Contractor's representations and warranties in Paragraphs A and B of this Article 13 are material representations of fact upon which the City relied when this Agreement was enteredinto by the parties. Contractor shall provide immediate written notice to the City if, at any timeduring the term of this Agreement, Contractor learns that Contractor's representations and warranties in Paragraphs A and B of this Article 13 were erroneous on the effective date of this Agreement or have become erroneous by reason of new or changed circumstances. If it is laterdetermined that Contractor's representations and warranties in Paragraphs A and B of this Article 13 were erroneous on the effective date of this Agreement or have become erroneous by reason ofnew or changed circumstances, in addition to other remedies available to the City and notwithstanding anything in the Agreement to the contrary, the City may immediately terminate the Agreement.

D. All terms defined in the Governmental Conduct Act have the same meaning in thissection.

14. Amendment.

A. This Agreement shall not be altered, changed or amended except by instrument in writing executed by the parties hereto and all other required signatories.

B. If the City proposes an amendment to the Agreement to unilaterally reduce funding due to budget or other considerations, the Contractor shall, within thirty (30) days of receipt of the proposed Amendment, have the option to terminate the Agreement, pursuant to the termination provisions as set forth in Article 4 herein, or to agree to the reduced funding.

15. Change Orders.

A. Changes. The Contractor may only make changes or revisions within the Scope of Work as defined by Article 1 and/or Exhibit 1 after receipt of written approval by the City Manager or his/her designee. Such change may only be made to Tasks or Sub-Task as defined in the Scope of Work. Under no circumstance shall such change affect the:

1) Deliverable requirements, as outlined in the Scope of Work;
2) Due date of any Deliverable, as outlined in the Scope of Work;
3) Compensation of any Deliverable, as outlined in the Scope of Work;
4) Agreement compensation, as outlined in Article 2; or
5) Agreement termination, as outlined in Article 4.

B. Change Request Process. In the event that circumstances warrant a change to accomplish the Scope of Work as described above, a Change Request shall be submitted that meets the following criteria:

1) The Project Manager shall draft a written Change Request for review and approval by the City Manager to include:
   (a) the name of the person requesting the change;
   (b) a summary of the required change;
   (c) the start date for the change;
   (d) the reason and necessity for change;
   (e) the elements to be altered; and
   (f) The impact of the change.

2) The City Manager shall provide a written decision on the Change Request to the Contractor within a maximum of ten (10) Business Days of receipt of the Change Request. All decisions made by the City Manager are final. Change Requests, once approved, become a part of the Agreement and become binding as a part of the original Agreement.

16. Merger.

This Agreement incorporates all the Agreements, covenants and understandings between the parties hereto concerning the subject matter hereof, and all such covenants, Agreements and understandings have been merged into this written Agreement. No prior Agreement or understanding, oral or otherwise, of the parties or their agents shall be valid or enforceable unless embodied in this Agreement.

17. Penalties for violation of law.

The Procurement Code, Sections 13-1-28 through 13-1-199, NMSA 1978, imposes civil and criminal penalties for its violation. In addition, the New Mexico criminal statutes imposefelony penalties for illegal bribes, gratuities and kickbacks.

18. Equal Opportunity Compliance.

The Contractor agrees to abide by all federal and state laws and rules and regulations, andSanta Fe City Code, pertaining to equal employment opportunity. In accordance with all such laws of the State of New Mexico, the Contractor assures that no person in the United States shall, on the grounds of race, religion, color, national origin, ancestry, sex, age, physical or mental handicap, or serious medical condition, spousal affiliation, sexual orientation or gender identity, be excluded from employment with or participation in, be denied the benefits of, or be otherwise subjected to discrimination under any program or activity performed under this Agreement. If Contractor is found not to be in compliance with these requirements during the life of this Agreement, Contractor agrees to take appropriate steps to correct these deficiencies.

19. Applicable Law.

The laws of the State of New Mexico shall govern this Agreement, without giving effect to its choice of law provisions. Venue shall be proper only in a New Mexico court of competent jurisdiction in accordance with Section 38-3-1 (G) NMSA 1978. By execution of this Agreement, Contractor acknowledges and agrees to the jurisdiction of the courts of the State of New Mexicoover any and all lawsuits arising under or out of any term of this Agreement.

20. Workers Compensation.

The Contractor agrees to comply with state laws and rules applicable to workers compensation benefits for its employees. If the Contractor fails to comply with the Workers Compensation Act and applicable rules when required to do so, this Agreement may be terminated by the City.

21. Professional Liability Insurance. Contractor shall maintain professional liability insurance throughout the term of this Agreement providing a minimum coverage in the amount required under the New Mexico Tort Claims Act. The Contractor shall furnish the City with proofof insurance of Contractor's compliance with the provisions of this section as a condition prior toperforming services under this Agreement.

22. Other Insurance

If the Services contemplated under this Agreement will be performed on or in City facilitiesor

property, Contractor shall maintain in force during the entire term of this Agreement, the following insurance coverage(s), naming the City as additional insured,

A. **Commercial General Liability** insurance shall be written on an occurrence basis and be a broad as ISO Form CG 00 01 with limits not less than $2,000,000 per occurrence and #2,000,000 in the aggregate for claims against bodily injury, personal and advertising injury, and property damage. Said policy shall include broad from Contractual Liability coverage and be endorsed to name the City of Santa Fe, their officials, officers, employees and agents as additionalinsureds.

B. **Business Automobile Liability** insurance for all owned, non-owned automobiles,with a combined single limit not less than $1,000,000 per accident.

C. **Broader Coverage and Limits.** The insurance requirements under this Agreement shall be the greater of (1) the minimum coverage and limits specified in this Agreement, or (2) the broader coverage and maximum limits of coverage of any insurance policy or proceeds available tothe Named Insured. It is agreed that these insurance requirements shall not in any way act to reduce coverage that is broader or that includes higher limits than the minimums required herein. No representation is made that minimum insurance requirements of this Agreement are sufficient to cover the obligations of Contractor hereunder.

D. Contractor shall maintain the above insurance for the term of this Agreement and name the City as an additional insured and provide for 30 days cancellation notice on any Certificate of Insurance form furnished by Contractor. Such certificate shall also specifically state the coverage provided under the policy is primary over any other valid and collectible insurance and provide a waiver of subrogation.

23. Records and Financial Audit.

The Contractor shall maintain detailed time and expenditure records that indicate the date; time, nature and cost of services rendered during the Agreement's term and effect and retain them for a period of three (3) years from the date of final payment under this Agreement. The records shall be subject to inspection by the City. The City shall have the right to audit billings both before and after payment. Payment under this Agreement shall not foreclose the right of the City to recover excessive or illegal payments.

24. Indemnification.

The Contractor shall defend, indemnify and hold harmless the City from all actions, proceeding, claims, demands, costs, damages, attorney's fees and all other liabilities and expenses of any kind from any source which may arise out of the performance of this Agreement, caused by the negligent act or failure to act of the Contractor, its officers, employees, servants, subcontractors or agents, or if caused by the actions of any client of the Contractor resulting in injury or damageto persons or property during the time when the Contractor or any officer, agent, employee, servantor subcontractor thereof has or is performing services pursuant to this Agreement. In the event that any action, suit or proceeding related to the services performed by the Contractor or any officer, agent, employee, servant or subcontractor under this Agreement is brought against the Contractor,the Contractor shall, as soon as practicable but no later than two (2) days after it receives notice thereof, notify the legal counsel of the City.

25. New Mexico Tort Claims Act

Any liability incurred by the City of Santa Fe in connection with this Agreement is subjectto the immunities and limitations of the New Mexico Tort Claims Act, Section 41-4-1, et. seq.NMSA 1978, as amended. The city and its "public employees" as defined in the New Mexico Tort Claims Act, do not waive sovereign immunity, do not waive any defense and do not waive anylimitation of liability pursuant to law. No provision in this Agreement modifies or waives any provision of the New Mexico

Tort Claims Act.

26. Invalid Term or Condition.

If any term or condition of this Agreement shall be held invalid or unenforceable, the remainder of this Agreement shall not be affected and shall be valid and enforceable.

27. Enforcement of Agreement.

A party's failure to require strict performance of any provision of this Agreement shall notwaive or diminish that party's right thereafter to demand strict compliance with that or any other provision. No waiver by a party of any of its rights under this Agreement shall be effective unlessexpress and in writing, and no effective waiver by a party of any of its rights shall be effective to waive any other rights.

28. Notices.

Any notice required to be given to either party by this Agreement shall be in writing andshall be delivered in person, by courier service or by U.S. mail, either first class or certified, return receipt requested, postage prepaid, as follows:

To the City:
Water Division Director
801 W. San Mateo
Santa Fe, NM 87505

To the Contractor:
A.AC Construction LLC
18 La Luna Road
Santa Fe, NM 87507

29. Authority.

If Contractor is other than a natural person, the individual(s) signing this Agreement on behalf of Contractor represents and warrants that he or she has the power and authority to bindContractor, and that no further action, resolution, or approval from Contractor is necessary to enterinto a binding contract.

IN WITNESS WHEREOF, the Parties have executed this Agreement as of the date of the signatureby the required approval authorities below.

CITY OF SANTA FE:

ALAN WEBBER, MAYOR

DATE: Sep 12, 2021

CONTRACTOR:

Andrew Sisneros (Aug 19, 2021 16:05 MDT)

NAME
Andrew Sisneros, Managing Member

TITLE
DATE: Aug 19, 2021

CRS# 03-157349-00-5
Registration # 222939

ATTEST:

Kristine Mihelcic
Kristine Mihelcic (Sep 15, 2021 12:10 MDT)

KRISTINE BUSTOS MIHELCIC, CITY CLERK
GB MTG 09/08/2021

CITY ATTORNEY'S OFFICE:

Marcos Martinez
Marcos Martinez (Aug 17, 2021 10:24 MDT)

SENIOR ASSISTANT CITY ATTORNEY

APPROVED FOR FINANCES:

Mary McCoy

MARY MCCOY, FINANCE DIRECTOR

5050395.572970
Org. Name/Org#

AJH
AJH

Bid Item	Approx. QTY.	Unit	Article and Description	AAC		Sub Surface	
				Unit Price	Item Price	Unit Price	Item Price
5	35	LF	2" PVC Water Main, cip, all lengths	$ 32.50	$ 1,137.50	$ 30.00	$ 1,050.00
10	35	LF	4" PVC Water Main, cip, <100'	$ 38.00	$ 1,330.00	$ 36.00	$ 1,260.00
15	100	LF	4" PVC Water Main, cip, >100'	$ 36.00	$ 3,600.00	$ 34.00	$ 3,400.00
20	50	LF	6" PVC Water Main, cip, <100'	$ 43.50	$ 2,175.00	$ 42.00	$ 2,100.00
25	150	LF	6" PVC Water Main, cip, >100'	$ 40.50	$ 6,075.00	$ 39.00	$ 5,850.00
30	75	LF	8" PVC Water Main, cip, <100'	$ 49.00	$ 3,675.00	$ 48.00	$ 3,600.00
35	200	LF	8" PVC Water Main, cip, >100'	$ 46.75	$ 9,350.00	$ 45.50	$ 9,100.00
40	35	LF	10" PVC Water Main, cip, <100'	$ 56.00	$ 1,960.00	$ 52.00	$ 1,820.00
45	100	LF	10" PVC Water Main, cip, >100'	$ 52.00	$ 5,200.00	$ 49.00	$ 4,900.00
50	50	LF	12" PVC Water Main, cip, <100'	$ 69.37	$ 3,468.50	$ 66.75	$ 3,337.50
55	150	LF	12" PVC Water Main, cip, >100'	$ 66.25	$ 9,937.50	$ 64.50	$ 9,675.00
60	50	LF	14" PVC Water Main, cip	$ 87.00	$ 4,350.00	$ 79.00	$ 3,950.00
65	50	LF	16" PVC Water Main, cip	$ 103.50	$ 5,175.00	$ 97.00	$ 4,850.00
70	50	LF	24" PVC Water Main, cip	$ 167.50	$ 8,375.00	$ 100.00	$ 5,000.00
75	35	LF	2" DI Water Main, cip, all lengths	$ 42.00	$ 1,470.00	$ -	$ -
80	50	LF	4" DI Water Main, cip, <100'	$ 63.75	$ 3,187.50	$ 57.50	$ 2,875.00
85	100	LF	4" DI Water Main, cip, >100'	$ 56.50	$ 5,650.00	$ 56.00	$ 5,600.00
90	75	LF	6" DI Water Main, cip, <100'	$ 63.50	$ 4,762.50	$ 53.00	$ 3,975.00
95	250	LF	6" DI Water Main, cip, >100'	$ 56.50	$ 14,125.00	$ 51.00	$ 12,750.00
100	75	LF	8" DI Water Main, cip, <100'	$ 68.00	$ 5,100.00	$ 60.25	$ 4,518.75
105	250	LF	8" DI Water Main, cip, >100'	$ 73.00	$ 18,250.00	$ 58.00	$ 14,500.00
110	35	LF	10" DI Water Main, cip, <100'	$ 77.00	$ 2,695.00	$ 65.00	$ 2,275.00
115	100	LF	10" DI Water Main, cip, >100'	$ 74.00	$ 7,400.00	$ 63.00	$ 6,300.00
120	50	LF	12" DI Water Main, cip, <100'	$ 99.00	$ 4,950.00	$ 78.00	$ 3,900.00
125	100	LF	12" DI Water Main, cip, >100'	$ 89.50	$ 8,950.00	$ 74.00	$ 7,400.00
130	50	LF	14" DI Water Main, cip	$ 115.50	$ 5,775.00	$ 87.00	$ 4,350.00
135	50	LF	16" DI Water Main, cip	$ 139.50	$ 6,975.00	$ 101.00	$ 5,050.00
140	50	LF	24" DI Water Main, cip	$ 207.00	$ 10,350.00	$ 159.00	$ 7,950.00
145	75	LF	Extra Pay for Trench Depth, 6'-8'	$ 41.00	$ 3,075.00	$ 8.00	$ 600.00
150	50	LF	Extra Pay for Trench Depth, 8'-10'	$ 98.00	$ 4,900.00	$ 12.00	$ 600.00
155	25	LF	Extra Pay for Trench Depth, 10'-14'	$ 154.00	$ 3,850.00	$ 30.00	$ 750.00
160	20	CY	Rock Excavation	$ 325.00	$ 6,500.00	$ 220.00	$ 4,400.00
165	300	CY	Exploratory Excavation (as SDCW Approved)	$ 50.00	$ 15,000.00	$ 65.00	$ 19,500.00
170	75	CY	Imported Backfill (as SDCW Approved)	$ 36.00	$ 2,700.00	$ 24.00	$ 1,800.00
175	1,000	LB	Fitting Installation	$ 4.50	$ 4,500.00	$ 4.00	$ 4,000.00
180	500	LB	Fitting Insertion	$ 26.00	$ 13,000.00	$ 34.00	$ 17,000.00
185	25	EA	4" Retainer Ring/ Bolt on Flange	$ 60.00	$ 1,500.00	$ 65.00	$ 1,625.00
190	50	EA	6" Retainer Ring/ Bolt on Flange	$ 86.50	$ 4,325.00	$ 105.00	$ 5,250.00
195	50	EA	8" Retainer Ring/ Bolt on Flange	$ 98.50	$ 4,925.00	$ 119.00	$ 5,950.00
200	20	EA	10" Retainer Ring/ Bolt on Flange	$ 123.00	$ 2,460.00	$ 121.00	$ 2,420.00
205	20	EA	12" Retainer Ring/ Bolt on Flange	$ 147.50	$ 2,950.00	$ 145.00	$ 2,900.00
210	20	EA	14" Retainer Ring/ Bolt on Flange	$ 184.50	$ 3,690.00	$ 179.00	$ 3,580.00
215	10	EA	16" Retainer Ring/ Bolt on Flange	$ 275.00	$ 2,750.00	$ 250.00	$ 2,500.00
220	25	EA	4" Joint Harness	$ 70.50	$ 1,762.50	$ 40.00	$ 1,000.00
225	50	EA	6" Joint Harness	$ 95.00	$ 4,750.00	$ 110.00	$ 5,500.00
230	50	EA	8" Joint Harness	$ 125.00	$ 6,250.00	$ 120.00	$ 6,000.00
235	20	EA	10" Joint Harness	$ 160.00	$ 3,200.00	$ 160.00	$ 3,200.00
240	20	EA	12" Joint Harness	$ 192.50	$ 3,850.00	$ 180.00	$ 3,600.00
245	20	EA	14" Joint Harness	$ 370.00	$ 7,400.00	$ 375.00	$ 7,500.00
250	10	EA	16" Joint Harness	$ 427.50	$ 4,275.00	$ 410.00	$ 4,100.00
255	10	CY	Concrete Thrust Blocking (as SDCW Approved)	$ 315.00	$ 3,150.00	$ 250.00	$ 2,500.00
260	2	EA	Tapping Sleeve w/ Tap, 4" X 4"	$ 1,350.00	$ 2,700.00	$ 1,350.00	$ 2,700.00
265	4	EA	Tapping Sleeve w/ Tap, 6" X 4" - 6"	$ 1,567.50	$ 6,270.00	$ 1,500.00	$ 6,000.00
270	4	EA	Tapping Sleeve w/ Tap, 8" X 4" - 8"	$ 1,900.00	$ 7,600.00	$ 1,800.00	$ 7,200.00

				AAC		Sub Surface	
Bid Item	Approx. QTY.	Unit	Article and Description	Unit Price	Item Price	Unit Price	Item Price
275	2	EA	Tapping Sleeve w/ Tap, 10" X 4" - 10"	$ 2,250.00	$ 4,500.00	$ 2,100.00	$ 4,200.00
280	4	EA	Tapping Sleeve w/ Tap, 12" X 4" - 12"	$ 2,650.00	$ 10,600.00	$ 2,300.00	$ 9,200.00
285	1	EA	Tapping Sleeve w/Tap, 20" X 4" - 20"	$ 4,747.50	$ 4,747.50	$ 4,200.00	$ 4,200.00
290	1	EA	Non-Pressurized Connections, 2" line	$ 1,650.00	$ 1,650.00	$ 1,500.00	$ 1,500.00
295	1	EA	Non-Pressurized Connections, 4"-10" line	$ 3,587.50	$ 3,587.50	$ 3,100.00	$ 3,100.00
300	1	EA	Non-Pressurized Connections, 12"-20" line	$ 6,050.00	$ 6,050.00	$ 4,100.00	$ 4,100.00
305	2	EA	2" CL125 Gate Valves, cip.	$ 807.50	$ 1,615.00	$ 850.00	$ 1,700.00
310	2	EA	4" CL125 Gate Valves, cip.	$ 925.00	$ 1,850.00	$ 1,200.00	$ 2,400.00
315	5	EA	6" CL125 Gate Valves, cip.	$ 1,200.00	$ 6,000.00	$ 1,525.00	$ 7,625.00
320	5	EA	8" CL125 Gate Valves, cip.	$ 1,650.00	$ 8,250.00	$ 1,725.00	$ 8,625.00
325	1	EA	10" CL125 Gate Valves, cip.	$ 2,315.00	$ 2,315.00	$ 2,325.00	$ 2,325.00
330	2	EA	12" CL125 Gate Valves, cip.	$ 2,900.00	$ 5,800.00	$ 2,800.00	$ 5,600.00
335	1	EA	2" CL250 Gate Valves, cip.	$ 792.50	$ 792.50	$ 700.00	$ 700.00
340	1	EA	4" CL250 Gate Valves, cip.	$ 1,837.50	$ 1,837.50	$ 1,800.00	$ 1,800.00
345	10	EA	6" CL250 Gate Valves, cip.	$ 1,950.00	$ 19,500.00	$ 1,825.00	$ 18,250.00
350	3	EA	8" CL250 Gate Valves, cip.	$ 2,475.00	$ 7,425.00	$ 2,000.00	$ 6,000.00
355	1	EA	10" CL250 Gate Valves, cip.	$ 4,000.00	$ 4,000.00	$ 3,700.00	$ 3,700.00
360	1	EA	12" CL250 Gate Valves, cip.	$ 4,552.50	$ 4,552.50	$ 4,200.00	$ 4,200.00
365	1	EA	16" CL250 Gate Valves, cip.	$ 7,025.00	$ 7,025.00	$ 6,500.00	$ 6,500.00
370	1	EA	20" CL250 Gate Valves, cip.	$ 16,755.00	$ 16,755.00	$ 16,190.00	$ 16,190.00
375	1	EA	24" CL250 Gate Valves, cip.	$ 23,750.00	$ 23,750.00	$ 23,250.00	$ 23,250.00
380	1	EA	12" CL250 Butterfly Valves, cip.	$ 2,800.00	$ 2,800.00	$ 2,800.00	$ 2,800.00
385	1	EA	16" CL250 Butterfly Valves, cip.	$ 4,975.00	$ 4,975.00	$ 4,850.00	$ 4,850.00
390	1	EA	20" CL250 Butterfly Valves, cip.	$ 7,680.00	$ 7,680.00	$ 6,600.00	$ 6,600.00
395	1	EA	24" CL250 Butterfly Valves, cip.	$ 10,042.50	$ 10,042.50	$ 9,125.00	$ 9,125.00
400	5	EA	Fire Hydrant, 5' or less bury, cip.	$ 2,987.50	$ 14,937.50	$ 3,200.00	$ 16,000.00
405	2	EA	Fire Hydrant Extension, 6" or 12" length	$ 767.50	$ 1,535.00	$ 700.00	$ 1,400.00
410	1	EA	Fire Hydrant Extension, 18" or 24" length	$ 1,017.50	$ 1,017.50	$ 920.00	$ 920.00
415	1	EA	Fire Hydrant Remove & Relay	$ 1,350.00	$ 1,350.00	$ 700.00	$ 700.00
420	1	EA	Fire Hydrant Remove & Return	$ 887.50	$ 887.50	$ 575.00	$ 575.00
425	1	EA	2 1/4" Flush Hydrant	$ 1,657.50	$ 1,657.50	$ 1,500.00	$ 1,500.00
430	1	EA	2" Blow-Off Valve Installation	$ 1,420.00	$ 1,420.00	$ 1,300.00	$ 1,300.00
435	1	EA	2" Pressure Relief Valve, cip.	$ 6,780.00	$ 6,780.00	$ 6,725.00	$ 6,725.00
440	1	EA	3" Pressure Relief Valve, cip.	$ 7,065.50	$ 7,065.50	$ 6,950.00	$ 6,950.00
445	1	EA	4" Pressure Relief Valve, cip.	$ 8,432.50	$ 8,432.50	$ 8,195.00	$ 8,195.00
450	1	EA	6" Pressure Relief Valve, cip.	$ 11,091.50	$ 11,091.50	$ 10,800.00	$ 10,800.00
455	1	EA	8" Pressure Relief Valve, cip.	$ 15,362.50	$ 15,362.50	$ 14,925.00	$ 14,925.00
460	1	EA	12" Pressure Relief Valve, cip.	$ 29,837.50	$ 29,837.50	$ 29,500.00	$ 29,500.00
465	1	EA	Air & Vacuum Release Valve, 1"	$ 2,970.00	$ 2,970.00	$ 2,750.00	$ 2,750.00
470	1	EA	Air & Vacuum Release Valve, 2"	$ 4,245.00	$ 4,245.00	$ 3,940.00	$ 3,940.00
475	1	EA	Install City of Santa Fe Furnished Valve/Meter, 2" - 4"	$ 825.00	$ 825.00	$ 450.00	$ 450.00
480	1	EA	Install City of Santa Fe Furnished Valve/Meter, 6" - 8"	$ 1,025.00	$ 1,025.00	$ 550.00	$ 550.00
485	1	EA	Install City of Santa Fe Furnished Valve/Meter, 10"-12"	$ 1,275.00	$ 1,275.00	$ 750.00	$ 750.00
490	1	EA	Metered 2" Bypass – Vault Installation	$ 4,000.00	$ 4,000.00	$ 3,185.00	$ 3,185.00
495	20	EA	Valve Box, cip.	$ 575.00	$ 11,500.00	$ 625.00	$ 12,500.00
500	5	EA	Valve Box Replacement	$ 750.00	$ 3,750.00	$ 775.00	$ 3,875.00
505	5	EA	Valve Box Removal of Existing	$ 425.00	$ 2,125.00	$ 325.00	$ 1,625.00
510	3	EA	Valve Box Adjustment	$ 600.00	$ 1,800.00	$ 550.00	$ 1,650.00
515	1	EA	Valve Stem Extension, 0'-4' Depth	$ 200.00	$ 200.00	$ 250.00	$ 250.00
520	4	VF	Precast 4' Diameter Pit w/ Lid Min. 4' Depth	$ 925.00	$ 3,700.00	$ 825.00	$ 3,300.00
525	8	VF	Precast 6' Diameter Pit w/ Lid Min. 4' Depth	$ 1,000.00	$ 8,000.00	$ 1,050.00	$ 8,400.00
530	8	VF	Precast 8' Diameter Pit w/ Lid Min. 4' Depth	$ 1,500.00	$ 12,000.00	$ 1,075.00	$ 8,600.00
535	7	CY	Cast-In-Place RCP Vault w/ Lid	$ 1,000.00	$ 7,000.00	$ 1,025.00	$ 7,175.00
540	1	EA	Prefabricated Vault, 4' X 8'	$ 8,900.00	$ 8,900.00	$ 8,995.00	$ 8,995.00

				AAC		Sub Surface	
Bid Item	Approx. QTY.	Unit	Article and Description	Unit Price	Item Price	Unit Price	Item Price
545	1	ACRE	Native Seeding	$ 2,600.00	$ 2,600.00	$ 2,275.00	$ 2,275.00
550	1	EA	Bollards (pair)	$ 1,180.00	$ 1,180.00	$ 975.00	$ 975.00
555	18	LF	4" Steel Casing	$ 31.37	$ 564.66	$ 95.00	$ 1,710.00
560	18	LF	4" PVC Casing	$ 15.40	$ 277.20	$ 75.00	$ 1,350.00
565	18	LF	14" Steel Casing	$ 107.43	$ 1,933.74	$ 175.00	$ 3,150.00
570	18	LF	16" Steel Casing	$ 124.02	$ 2,232.36	$ 200.00	$ 3,600.00
575	18	LF	18" Steel Casing	$ 144.03	$ 2,592.54	$ 275.00	$ 4,950.00
580	18	LF	22" Steel Casing	$ 234.94	$ 4,228.92	$ 300.00	$ 5,400.00
585	18	LF	26" Steel Casing	$ 290.67	$ 5,232.06	$ 400.00	$ 7,200.00
590	18	LF	28" Steel Casing	$ 187.04	$ 3,366.72	$ 450.00	$ 8,100.00
595	18	LF	30" Steel Casing	$ 187.04	$ 3,366.72	$ 450.00	$ 8,100.00
600	18	LF	36" Steel Casing	$ 287.03	$ 5,166.54	$ 500.00	$ 9,000.00
605	50	DIA-IN-LF	Bore & Jack Casing Pipe	$ 575.00	$ 28,750.00	$ 40.00	$ 2,000.00
610	18	LF	Open Cut Casing Pipe Installation, < 6' Deep	$ 62.00	$ 1,116.00	$ 39.00	$ 702.00
615	25	SY	Asphalt Pavement Removal & Disposal, <2"	$ 29.50	$ 737.50	$ 65.00	$ 1,625.00
620	200	SY	Asphalt Pavement Removal & Disposal, 2"-6"	$ 17.70	$ 3,540.00	$ 65.00	$ 13,000.00
625	10	SY	Concrete Pavement Removal & Disposal, <2"	$ 97.50	$ 975.00	$ 90.00	$ 900.00
630	10	SY	Concrete Pavement Removal & Disposal, 2"-6"	$ 132.50	$ 1,325.00	$ 95.00	$ 950.00
635	50	LF	Concrete Curb and Gutter Removal & Disposal	$ 12.00	$ 600.00	$ 25.00	$ 1,250.00
640	10	SY	Concrete Sidewalk Removal & Disposal	$ 65.00	$ 650.00	$ 30.00	$ 300.00
645	50	SY	Replace City Street Pavement w/o Laydown Machine, Virgin Asphalt	$ 74.50	$ 3,725.00	$ 75.00	$ 3,750.00
650	50	SY	Replace City Street Pavement w/o Laydown Machine, Recycled Asphalt	$ 74.50	$ 3,725.00	$ 75.00	$ 3,750.00
655	50	SY	Replace City Street Pavement with Laydown Machine, Virgin Asphalt	$ 72.00	$ 3,600.00	$ 75.00	$ 3,750.00
660	10	SY	Replace City Street Pavement with Laydown Machine, Recycled Asphalt	$ 84.96	$ 849.60	$ 75.00	$ 750.00
665	10	SY	Replace City Street Pavement with Temporary Cold Mix	$ 167.56	$ 1,675.60	$ 75.00	$ 750.00
670	100	SY	Replace Non-City Street Pavement w/o Laydown Machine, Virgin Asphalt	$ 74.50	$ 7,450.00	$ 75.00	$ 7,500.00
675	10	SY	Replace Non-City Street Pavement w/o Laydown Machine, Recycled Asphalt	$ 74.50	$ 745.00	$ 75.00	$ 750.00
680	10	SY	Replace Non-City Street Pavement with Laydown Machine, Virgin Asphalt	$ 92.00	$ 920.00	$ 75.00	$ 750.00
685	10	SY	Replace Non-City Street Pavement with Laydown Machine, Recycled Asphalt	$ 92.00	$ 920.00	$ 75.00	$ 750.00
690	1	SY	Replace Non-City Street Pavement with Temporary Cold Mix	$ 167.56	$ 167.56	$ 75.00	$ 75.00
695	10	SY	Replace Concrete Pavement	$ 261.50	$ 2,615.00	$ 275.00	$ 2,750.00
700	50	LF	Replace Concrete Curb & Gutter	$ 45.00	$ 2,250.00	$ 45.00	$ 2,250.00
705	10	SY	Replace Concrete Sidewalk	$ 155.00	$ 1,550.00	$ 170.00	$ 1,700.00
710	10	CY	Replace Gravel Surface, 0"-2"	$ 56.00	$ 560.00	$ 85.00	$ 850.00
715	10	CY	Replace Gravel Surface, 2"-4"	$ 66.00	$ 660.00	$ 120.00	$ 1,200.00
720	150	SY	Base course/Gravel (crushed or landscape), 0"-3"	$ 34.00	$ 5,100.00	$ 35.00	$ 5,250.00
725	50	SY	Base course/Gravel (crushed or landscape), 3"-6"	$ 45.00	$ 2,250.00	$ 45.00	$ 2,250.00
730	4	EA	Service, 3/4" Single, New Main	$ 1,262.50	$ 5,050.00	$ 1,475.00	$ 5,900.00
735	2	EA	Service, 3/4" Double, New Main	$ 1,662.50	$ 3,325.00	$ 1,775.00	$ 3,550.00
740	2	EA	Service, 1", New Main	$ 1,887.50	$ 3,775.00	$ 1,825.00	$ 3,650.00
745	1	EA	Service, 1 1/2", New Main	$ 3,670.00	$ 3,670.00	$ 3,450.00	$ 3,450.00
750	1	EA	Service, 2", New Main	$ 3,985.00	$ 3,985.00	$ 3,870.00	$ 3,870.00
755	5	EA	Service, 3/4" Single, Existing Main	$ 1,450.00	$ 7,250.00	$ 1,475.00	$ 7,375.00
760	2	EA	Service, 3/4" Double, Existing Main	$ 1,912.50	$ 3,825.00	$ 1,775.00	$ 3,550.00
765	1	EA	Service, 1", Existing Main	$ 1,900.00	$ 1,900.00	$ 1,825.00	$ 1,825.00
770	1	EA	Service, 1 1/2", Existing Main	$ 3,670.00	$ 3,670.00	$ 3,450.00	$ 3,450.00
775	1	EA	Service, 2", Existing Main	$ 4,300.00	$ 4,300.00	$ 3,870.00	$ 3,870.00
780	5	EA	Service Replacement, 3/4"	$ 1,602.50	$ 8,012.50	$ 1,475.00	$ 7,375.00
785	2	EA	Service Replacement, Double, 3/4"	$ 1,950.00	$ 3,900.00	$ 1,775.00	$ 3,550.00
790	1	EA	Service Replacement, 1"	$ 2,100.00	$ 2,100.00	$ 1,825.00	$ 1,825.00

				AAC		Sub Surface	
Bid Item	Approx. QTY.	Unit	Article and Description	Unit Price	Item Price	Unit Price	Item Price
795	1	EA	Service Replacement, 1 1/2"	$ 3,875.00	$ 3,875.00	$ 3,450.00	$ 3,450.00
800	1	EA	Service Replacement, 2"	$ 4,512.00	$ 4,512.00	$ 3,870.00	$ 3,870.00
805	3	EA	Meter Box Relocation/Replacement, 3/4"	$ 1,000.00	$ 3,000.00	$ 895.00	$ 2,685.00
810	1	EA	Meter Box Relocation/Replacement, 1"	$ 1,150.00	$ 1,150.00	$ 915.00	$ 915.00
815	1	EA	Meter Box Relocation/Replacement, 1-1/2"	$ 1,800.00	$ 1,800.00	$ 1,400.00	$ 1,400.00
820	1	EA	Meter Box Relocation/Replacement, 2"	$ 1,900.00	$ 1,900.00	$ 1,400.00	$ 1,400.00
825	5	EA	Service Transfer, 3/4"	$ 812.50	$ 4,062.50	$ 725.00	$ 3,625.00
830	2	EA	Service Transfer, 1"	$ 912.50	$ 1,825.00	$ 825.00	$ 1,650.00
835	1	EA	Service Transfer, 1 1/2"	$ 1,112.50	$ 1,112.50	$ 925.00	$ 925.00
840	1	EA	Service Transfer at Main, 2"	$ 1,325.00	$ 1,325.00	$ 975.00	$ 975.00
845	1	EA	Retire Existing Service at Main, 3/4"- 2"	$ 962.50	$ 962.50	$ 725.00	$ 725.00
850	1	EA	Retire Existing Meter Box & Setting	$ 437.50	$ 437.50	$ 525.00	$ 525.00
855	1	EA	Adjust Meter Box To Grade	$ 412.50	$ 412.50	$ 425.00	$ 425.00
860	11	EA	Service Saddle, 3/4" Tap, 4"-12" Main	$ 500.00	$ 5,500.00	$ 650.00	$ 7,150.00
865	4	EA	Service Saddle, 1" Tap, 4"-12" Main	$ 462.50	$ 1,850.00	$ 675.00	$ 2,700.00
870	3	EA	Service Saddle, 1 1/2" Tap, 4"-12" Main	$ 562.50	$ 1,687.50	$ 750.00	$ 2,250.00
875	3	EA	Service Saddle, 2" Tap, 4"-12" Main	$ 650.00	$ 1,950.00	$ 775.00	$ 2,325.00
880	100	LF	Service Tubing, 3/4"	$ 28.75	$ 2,875.00	$ 31.50	$ 3,150.00
885	100	LF	Service Tubing, 1"	$ 34.12	$ 3,412.00	$ 33.75	$ 3,375.00
890	100	LF	Service Tubing, 1 1/2"	$ 46.50	$ 4,650.00	$ 44.00	$ 4,400.00
895	25	LF	Service Tubing, 2"	$ 65.50	$ 1,637.50	$ 53.00	$ 1,325.00
900	1	EA	Air and Vacuum Valve (individual)	$ 450.00	$ 450.00	$ 1,550.00	$ 1,550.00
905	1	GROUP OF 10	Air and Vacuum Valves	$ 8,045.00	$ 8,045.00	$ 15,500.00	$ 15,500.00
910	1	EA	Automatic Flushing Valve	$ 5,867.50	$ 5,867.50	$ 4,350.00	$ 4,350.00
915	$20,000	%	Materials Mark-Up Over Invoice	$ 3,600.00	$ 3,600.00	$ 1,500.00	$ 1,500.00
920	$8,000	%	Traffic Control Mark-Up Over Invoice	$ 1,440.00	$ 1,440.00	$ 1,200.00	$ 1,200.00
925	1	Allow.	Street-Cut Permits	$ 175.00	$ 175.00	$ 375.00	$ 375.00
930	1	EA	Project Signs	$ 675.00	$ 675.00	$ 450.00	$ 450.00
935	10	HR	Archeological Required Delay (after 2 hrs)	$ 250.00	$ 2,500.00	$ 185.00	$ 1,850.00
940	1	LS	Archeological Required Mob/Demob	$ 725.00	$ 725.00	$ 700.00	$ 700.00
EMERGENCY REPAIR					$ -		$ -
9000	175	HR	Supervisor's Truck With tools	$ 35.00	$ 6,125.00	$ 30.00	$ 5,250.00
9100	80	HR	Backhoe/Skid Steer	$ 57.00	$ 4,560.00	$ 58.00	$ 4,640.00
9200	8	HR	Compressor with tools	$ 54.00	$ 432.00	$ 35.00	$ 280.00
9300	16	HR	Dump Truck	$ 65.00	$ 1,040.00	$ 60.00	$ 960.00
9400	4	HR	Pump	$ 25.00	$ 100.00	$ 15.00	$ 60.00
9500	300	HR	Laborer	$ 42.50	$ 12,750.00	$ 43.00	$ 12,900.00
9600	200	HR	Pipe Fitter	$ 44.50	$ 8,900.00	$ 45.00	$ 9,000.00
9700	200	HR	Equipment Operator	$ 57.50	$ 11,500.00	$ 58.00	$ 11,600.00
9800	175	HR	Foreman	$ 59.50	$ 10,412.50	$ 60.00	$ 10,500.00
9900	$5,000	%	Rental Items Mark-Up Over Invoice (multiply $5,000 x your % for Item Price)	$ 1,000.00	$ 1,000.00	$ 900.00	$ 900.00
9950	$20,000	%	Materials Mark-Up Over Invoice (multiply $20,000 x your % for Item Price)	$ 3,600.00	$ 3,600.00	$ 1,500.00	$ 1,500.00

of the Contractor are in addition to his obligations under Paragraph 4.18.

10.2.6 The Contractor shall designate a responsible member of his organization at the site whose duty shall be the prevention of accidents. This person shall be the Contractor's Superintendent unless otherwise designated by the Contractor in writing to the City of Santa Fe and the City of Santa Fe's Representative.

10.2.7 The Contractor shall not load or permit any part of the work to be loaded so as to endanger its safety.

10.3 EMERGENCIES

10.3.1 In any emergency affecting the safety of persons or property, the Contractor shall act, at his reasonable discretion, to prevent threatened damage, injury or loss. Any additional compensation or extension of time claimed by the Contractor on account of emergency work shall be determined as provided in Article 12 for changes in the work.

ARTICLE 11

INSURANCE

11.1 CONTRACTOR'S LIABILITY INSURANCE

11.1.1. The Contractor shall carry insurance to protect the City of Santa Fe from and against all claims, demands, actions, judgments, costs, expenses and liabilities which may arise or result directly or indirectly from or by reasons of loss, injury or damage related to the Project. The Contractor shall file with the City of Santa Fe current certificates evidencing public liability insurance with limits as provided in the New Mexico Tort Claims Act, Section 41-4-19 NMSA 1978, and as that section or successors section may be amended from time to time. The contractor shall also carry such insurance as it deems necessary to protect it from all claims under any workmen's compensation law in effect that may be applicable to the Contractor. All insurance required by this Agreement shall be kept and remain in full force and effect for the entire life of this Agreement.

11.1.2. The insurance coverage shall include worker's compensation, employer's liability, comprehensive general liability (Premises-Operations, independent contractors, products and completed operations, broad form property damage, contractual liability, explosion and collapse hazard, underground Hazard, personal injury) comprehensive automobile liability (owned and hired), excess liability (umbrella form), and all-risk builder's risk.

11.1.3. All insurance coverage must be maintained for the entire life of the Project. Products and completed operations coverage shall be maintained for a minimum period of one (1) year after final payment.

11.1.4. A valid certificate of insurance must be submitted to the City of Santa Fe prior to issuance of a Notice-to-Proceed.

Type of Required Coverage	Minimum Limits of Liability
Workman's compensation (including accident and occupational disease coverage)	Statutory
Employer's Liability	$100,000
Comprehensive General Liability (including endorsements providing broad form property damage coverage, personal injury coverage, and contractual assumption of liability coverage for all liability the Contractor has assumed under his Contract).	Bodily injury liability: $500,000 each occurrence; $1,000,000 aggregate. Property damage liability: $500,000 each occurrence; $1,000,000 aggregate.
Auto Liability (including non-owned auto coverage)	Bodily injury liability: $500,000 each person; $1,000,000 each occurrence. Property damage liability: $1,000,000 each occurrence

11.1.5 Certificates of Insurance acceptable to the City of Santa Fe shall be filed with the City of Santa Fe prior to

commencement of the work. These Certificates shall contain a provision that coverage afforded under the policies will not be canceled until at least thirty days' prior written notice has been given to the City of Santa Fe. The Contractor shall furnish one (1) copy of each of the Certificates of insurance herein required for each copy of the Contract.

11.2 CITY OF SANTA FE'S LIABILITY INSURANCE

11.2.1 The City of Santa Fe shall be responsible for purchasing and maintaining his own liability insurance and, at his option, may purchase and maintain such insurance as will protect him against all claims which may arise from operations under the Contract.

11.3 PROPERTY INSURANCE

11.3.1 The Contractor shall maintain traditional course of construction insurance upon the work at the site for at least the actual cash value thereof. The traditional course of construction insurance shall cover the interests of the City of Santa Fe, the Contractor, Subcontractors, and Sub-subcontractors in the work. The insurance shall insure against at least the following perils: fire extended coverage, vandalism, malicious mischief, and flood insurance with a deductible of no more than $25,000. The Contractor shall bear the cost of such insurance and include its cost in the Bid.

11.3.2 Any loss insured under Subparagraph 11.3.1 is to be adjusted with the City of Santa Fe and made payable to the City of Santa Fe as trustee for the insured, as their interests may appear subject to the requirements of any applicable mortgage clause. The City of Santa Fe shall deposit the proceeds in a separate account and shall distribute them in accordance with such agreement as the parties in interest, including the City of Santa Fe, may reach. The Contractor shall pay each Subcontractor a just share of any insurance proceeds which the Contractor receives and shall require by written agreement signed by the Subcontractor that the Subcontractor will make payments to his Sub-subcontractors in a similar manner. If after such loss no other special agreement is made, replacement of damaged work shall be covered by an appropriate order.

11.3.3 To the extent permitted under their respective property insurance policies, the City of Santa Fe and the Contractor hereby waive all rights, each against the other, for damages caused by fire or other perils to the extent covered by Insurance obtained pursuant to this Article 11 or any other property insurance applicable to the work, except such rights as they may have to the proceeds of such Insurance held by the City of Santa Fe as trustee. The City of Santa Fe or the Contractor, as appropriate, shall require the City of Santa Fe's Representative, other Contractors, Subcontractors, and Sub-subcontractors to similarly waive rights of subrogation or property insurers.

11.3.4 If the City of Santa Fe finds it necessary to occupy use of any portion of the work prior to Substantial Completion, such occupancy or use shall not commence prior to the time mutually agreed to by the City of Santa Fe and the Contractor and, if required by the applicable insurance or self-insurance coverage not prior to the time the builder's risk property insurer has consented to such occupancy or use. The Contractor's consent to such occupancy or use shall not be unreasonably withheld.

11.4 LOSS OF USE INSURANCE

11.4.1 The City of Santa Fe, at his option, may purchase and maintain such insurance as will insure him against loss of use of his property due to fire or other hazards, however caused.

Item#_____
Munis Contract#3202927
Original Contract Item#21-0483
CIP #3058

CITY OF SANTA FE
AMENDMENT No. 2 TO
The Priority Line Replacement Price Agreement
ITEM#21-0483

This AMENDMENT No. 2 (the "Amendment") amends the CITY OF SANTA FE Agreement, dated September 10, 2021 (the "Agreement"), between the City of Santa Fe and A.A.C. Construction, LLC. The date of this Amendment shall be the date when it is executed by the City and the Contractor whichever occurs last.

RECITALS:

A. Under the terms of the Contract, Contractor has agreed to provide the Priority Line Replacement for the City of Santa Fe.

B. Pursuant to Article 14 of the Contract, and for good and valuable consideration, the receipt and sufficiency of which are acknowledged by the parties, the City and the Contractor agree as follows:

1. COMPENSATION.

Article 2, paragraph A of the Contract is amended to increase the amount of compensation by a total of one million, five hundred and eighty-one thousand, eight hundred and seventy five dollars ($1,581,875.00) so that Article 2, paragraph A reads in its entirety as follows:

A. The City shall pay to the Contractor in full payment for services satisfactorily performed at total amount up to five million, forty-one thousand, eight hundred and seventy-five dollars and thirty cents ($ $4,944,612.75). The New Mexico gross receipts tax levied on the amounts payable under this Agreement totaling four hundred ninety three thousand six hundred fifteen dollars and fifty-two cents ($493,615.52) shall be paid by the

City to the Contractor as described in Exhibit A attached hereto. **The total amount payable to the Contractor under this Agreement, including gross receipts tax and expenses, shall not exceed five million four hundred thirty eight thousand two hundred twenty eight dollars and twenty seven cents ($ $5,438,228.27). This amount is a maximum and not a guarantee that the work assigned to be performed by the Contractor under this Agreement shall equal the amount stated herein. The parties do not intend for the Contractor to continue to provide services without compensation when the total compensation amount is reached. Contractor is responsible for notifying the City when the services provided under this Agreement reach the total compensation amount. In no event will the Contractor be paid for services provided in excess of the total compensation amount without this Agreement being amended in writing prior to those services in excess of the total compensation amount being provided.**

2. CONTRACT IN FULL FORCE.

Except as specifically provided in this Amendment, the Contract remains and shall remain in full force and effect, in accordance with its terms.

IN WITNESS WHEREOF, the parties have executed this Amendment No. 2 to the Contract as of the dates set forth below.

CITY OF SANTA FE:

_____
ALAN WEBBER, MAYOR

DATE:_____

CONTRACTOR:
A.A.C. Construction, LLC

Andrew Sisneros (Oct 26, 2024 06:24 MDT)
ANDREW SISNEROS, OWNER

DATE: Oct 26, 2024

CRS# 03-157349-00-5

Registration #19-00127501

ATTEST:

_____
GERALYN CARDENAS, INTERIM CITY CLERK

CITY ATTORNEY'S OFFICE:

Marcos Martinez
Marcos Martinez (Oct 28, 2024 08:09 MDT)
SENIOR ASSISTANT CITY ATTORNEY

APPROVED FOR FINANCES:

_____
FINANCE DIRECTOR

GB AAC Contract Amendment 2 Munis Contract 3202927

Final Audit Report 2024-10-30

Created:	2024-10-30
By:	JAMES EDWARDS (jwedwards@santafenm.gov)
Status:	Canceled / Declined
Transaction ID:	CBJCHBCAABAALv-Wzon7KgiZ0So4eLlxvqVndD96XpIh

"GB AAC Contract Amendment 2 Munis Contract 3202927" History

Document created by JAMES EDWARDS (jwedwards@santafenm.gov)
2024-10-30 - 7:41:09 PM GMT- IP address: 63.232.20.2

Document emailed to ajhopkins@santafenm.gov ajhopkins@santafenm.gov (ajhopkins@santafenm.gov) for signature
2024-10-30 - 7:50:00 PM GMT

Email viewed by ajhopkins@santafenm.gov ajhopkins@santafenm.gov (ajhopkins@santafenm.gov)
2024-10-30 - 7:54:01 PM GMT- IP address: 104.47.65.254

Document declined by ajhopkins@santafenm.gov ajhopkins@santafenm.gov (ajhopkins@santafenm.gov)
Decline reason: BAR requires Dept Director signature before it comes to Budget.
2024-10-30 - 7:55:05 PM GMT- IP address: 63.232.20.2

Powered by Adobe Acrobat Sign

GB AAC Contract Amendment 2 Munis Contract 3202927 (1)

Interim Agreement Report 2024-11-01

Created:	2024-10-31
By:	JAMES EDWARDS (jwedwards@santafenm.gov)
Status:	Out for Signature
Transaction ID:	CBJCHBCAABAAZp8GD-HBWbp0KNlfU5kKAB9ijyTu0WlH

Agreement History

Agreement history is the list of the events that have impacted the status of the agreement prior to the final signature. A final audit report will be generated when the agreement is complete.

"GB AAC Contract Amendment 2 Munis Contract 3202927 (1)" History

Document created by JAMES EDWARDS (jwedwards@santafenm.gov)
2024-10-31 - 8:52:49 PM GMT- IP address: 75.233.144.205

Document emailed to John Dupuis (jedupuis@santafenm.gov) for signature
2024-10-31 - 8:57:26 PM GMT

Document e-signed by John Dupuis (jedupuis@santafenm.gov)
Signature Date: 2024-10-31 - 9:27:29 PM GMT - Time Source: server- IP address: 174.218.18.173

Document emailed to Jesse Roach (jdroach@santafenm.gov) for signature
2024-10-31 - 9:27:35 PM GMT

Email viewed by Jesse Roach (jdroach@santafenm.gov)
2024-10-31 - 9:33:35 PM GMT- IP address: 104.47.65.254

Document e-signed by Jesse Roach (jdroach@santafenm.gov)
Signature Date: 2024-10-31 - 9:34:16 PM GMT - Time Source: server- IP address: 63.232.20.2

Document emailed to ajhopkins@santafenm.gov ajhopkins@santafenm.gov (ajhopkins@santafenm.gov) for signature
2024-10-31 - 9:34:24 PM GMT

Email viewed by ajhopkins@santafenm.gov ajhopkins@santafenm.gov (ajhopkins@santafenm.gov)
2024-10-31 - 11:23:17 PM GMT- IP address: 104.47.65.254

Powered by Adobe Acrobat Sign

Document e-signed by ajhopkins@santafenm.gov ajhopkins@santafenm.gov (ajhopkins@santafenm.gov)

Signature Date: 2024-10-31 - 11:23:53 PM GMT - Time Source: server- IP address: 63.232.20.2

Document sent to JoAnn Lovato (jdlovato@santafenm.gov) and Travis Dutton-Leyda (tkduttonleyda@santafenm.gov) for signature. One of them to sign

2024-10-31 - 11:24:00 PM GMT

Email viewed by Travis Dutton-Leyda (tkduttonleyda@santafenm.gov)

2024-11-01 - 5:53:25 AM GMT- IP address: 104.28.48.213

Email viewed by JoAnn Lovato (jdlovato@santafenm.gov)

2024-11-01 - 4:13:35 PM GMT- IP address: 63.232.20.2

City of Santa Fe, New Mexico

memo

Date: October 29, 2024

To: Public Works and Utilities Committee / Finance Committee / City Council

Via: John Dupuis, Public Utilities Department Director John Dupuis (Oct 29, 2024 15:26 MDT)
Jesse D. Roach, Water Division Director

From: Michael R. Moya, Transmission & Distribution Section Manager
Bill Huey, Water Division Engineer

Subject: Request approval of Amendment No. 2 to Price Agreement Item # 23-0182 with Sub Surface Contracting, Inc. (Sub Surface) to Increase Maximum Compensation by $1,656,806.25 for a New Total Contract Amount of $6,696,806.25 including NMGRT) (Bill Huey, Engineer, bchuey@santafenm.gov).

Vendor Name: Sub Surface Contracting, Inc.

Vendor Number: 1921

Contract Number: 3202929

ITEM AND ISSUE:

The Public Utilities Department, Water Division requests approval of Amendment No. 2 to Price Agreement Item # 23-0182 with Sub Surface Contracting, Inc. (Sub Surface) to Increase Maximum Compensation by $1,656,806.25 for a New Total Contract Amount of $6,696,806.25 including NMGRT with No Corresponding Change to the Term of the Agreement. (Bill Huey, Engineer, bchuey@santafenm.gov).

ACTION REQUESTED:

Approval of Amendment No. 2 to Price Agreement #23-0182

BACKGROUND AND SUMMARY:

In July 2021, City Council awarded bid number '21/43/B for the Priority Line Replacement Price Agreement, CIP # 3058 to both Sub Surface Contracting and A.A.C. Construction LLC for four (4) Fiscal Years, FY 2021-22 until FY2024-25 at the initial funding amount of $3,500,000 inclusive of NMGRT. Future funding was dependent upon the availability of CIP funds.

The Priority Line Replacement Price Agreement is an on-call requirements contract, with the Water Division issuing work orders as needed for work such as water line replacements. The contract is funded from CIP for Transmission and Distribution to work on their infrastructure.

Due to Supply Chain delays, $467,000.00 in orders from Sub Surface on the previous contract were delayed until after this contract was in effect and were paid under this contract. Another change Order had been drafted to handle this expense and was assumed to have been handled in the past, but never made it onto the official contract. Current contract possible funding for Sub Surface is limited to $29,713.52 without approval of Amendment #2.

The Water Division historically planned to upgrade pressure reducing valve vaults but has not done so in the last few years. We request adding a total of $1,000,000 to this contract, $500,000.00 for each contractor to begin this upgrade program again.

The Water Division is requesting approval of $1,656,806.25 (including NMGRT) additional funding to allow for this Fiscal Year's work to be conducted.

PROCUREMENT METHOD:

ITB/PA No. '21/43/B FY 21/22 Priority Line Replacement Price Agreement, CIP # 3058 approved by City Council on 7/28/2021.

Chief Procurement Officer Approval: _____ **Date:** _____
Comment/Exceptions: _____

Supporting Information:

CONTRACT NUMBER:
The FY25 Munis contract number for Sub Surface is 3202929
The FY25 Project ledger number for Priority Line Replacements is WTRR2550521

$$$$$ SOURCE/REVENUE: ☒Expense ☐Revenue

The funding source is:
Fund Name/Number: Water Enterprise Fund/Fund 500
Munis Org Name/Number: Water CIP/5050395
Munis Object Name/Number: WIP Construction/572970

If the project is grant funded? List grant award number*:* _____

Grant Manager / Accounting Officer Approval: _____ **Date:** _____
Comment/Exceptions: _____

Project Ledger #: _____

Budget Officer Approval: Andy Hopkins **Date:** Oct 31, 2024
Comment/Exceptions: _____

CAPITAL ASSET (will this procurement result in a tangible item that costs more than $5,000?):

☒Yes | ☐ No

 # (if known): _____

Repair or Replacement of Existing Equipment:

☒Yes | ☐ No
If yes -> ☒Repair | ☒ Replacement

Please explain: Contract is used to repair main water line breaks and to replace smaller sections of main water lines.

Capital Project:
(New and improvement projects that are going to cost $10,000 or more)
☒ Yes | ☐ No

Project Ledger #: _____

Anticipated length of project: To be determined _____

Asset Manager Approval: _____ **Date:** _____
Comment/Exceptions: _____

Department Approvals:
IT Components: ☐ **Yes | ☒ No**
Vehicles: ☐ **Yes | ☒ No**
Facilities, Furniture, Fixtures, Equipment: ☐ **Yes | ☒ No**

Approval: _____ **Title:** _____ **Date**: _____
Approval: _____ **Title:** _____ **Date**: _____
Comment & Exceptions: _____

Department Contract Administrator Contact Info:
Gina Wolff
vawolff@santafenm.gov

ATTACHMENTS:
Contract 3202929 Amendment No. 2
Budget Adjustment Request (BAR)

cc:

Log # *{Finance use only}*:	
Journal # *{Finance use only}*:	

City of Santa Fe, New Mexico
BUDGET AMENDMENT RESOLUTION (BAR)

DEPARTMENT / DIVISION NAME	DATE
Public Utilities Department / Water Division	10/28/2024

ITEM DESCRIPTION	ORG	OBJECT	PROJECT	INCREASE	DECREASE
EXPENDITURES				*{enter as positive #}*	*{enter as negative #}*
Water Cap Proj, WIP Construction	5050395	572970	WTR2550521	1,656,807	
REVENUES				*{enter as negative #}*	*{enter as positive #}*
				$ 1,656,807	$ -

JUSTIFICATION: *(use additional page if needed)*
--Attach supporting documentation/memo

Please see attached Memo.

Contract (3202929) with Sub Surface Contracting Inc for priority line repairs Amendment No. 2

{Complete section below if BAR results in a net change to ANY Fund}

Fund(s) Affected	Fund Balance Increase/(Decrease)
505	(1,656,807)
TOTAL:	**(1,656,807)**

Jonna Leigh Stack for Bill Huey — 10/28/2024
Prepared By *{print name}* — Date

Oct 31, 2024
Division Director Signature *{optional}* — Date

John Dupuis (Oct 31, 2024 15:26 MDT) Oct 31, 2024
Department Director Signature, John Dupuis — Date

{Use this form for Finance Committee/ City Council agenda items ONLY}

CITY COUNCIL APPROVAL

City Council Approval Date

Agenda Item #:

Andy Hopkins — Oct 31, 2024
Budget Officer — Date

Finance Director *{≤ $5,000}* — Date

City Manager *{≤ $60,000}* — Date

CERTIFICATE OF LIABILITY INSURANCE

DATE (MM/DD/YYYY) 7/19/2024

THIS CERTIFICATE IS ISSUED AS A MATTER OF INFORMATION ONLY AND CONFERS NO RIGHTS UPON THE CERTIFICATE HOLDER. THIS CERTIFICATE DOES NOT AFFIRMATIVELY OR NEGATIVELY AMEND, EXTEND OR ALTER THE COVERAGE AFFORDED BY THE POLICIES BELOW. THIS CERTIFICATE OF INSURANCE DOES NOT CONSTITUTE A CONTRACT BETWEEN THE ISSUING INSURER(S), AUTHORIZED REPRESENTATIVE OR PRODUCER, AND THE CERTIFICATE HOLDER.

IMPORTANT: If the certificate holder is an ADDITIONAL INSURED, the policy(ies) must have ADDITIONAL INSURED provisions or be endorsed. If SUBROGATION IS WAIVED, subject to the terms and conditions of the policy, certain policies may require an endorsement. A statement on this certificate does not confer rights to the certificate holder in lieu of such endorsement(s).

PRODUCER License # 0757776 HUB International Insurance Services (SOW) 2905 Rodeo Park Drive East Building 6, Suite 100 Santa Fe, NM 87505	CONTACT NAME: Michelle Vialpando PHONE (A/C, No, Ext): (505) 992-1873 FAX (A/C, No): (866) 487-3972 E-MAIL ADDRESS: michelle.vialpando@hubinternational.com
INSURED Sub Surface Contracting Inc 27A Paseo De River St Santa Fe, NM 87507	INSURER(S) AFFORDING COVERAGE / NAIC # INSURER A : ACUITY, A Mutual Insurance Company 14184 INSURER B : Builders Trust of New Mexico INSURER C : INSURER D : INSURER E : INSURER F :

COVERAGES **CERTIFICATE NUMBER:** **REVISION NUMBER:**

THIS IS TO CERTIFY THAT THE POLICIES OF INSURANCE LISTED BELOW HAVE BEEN ISSUED TO THE INSURED NAMED ABOVE FOR THE POLICY PERIOD INDICATED. NOTWITHSTANDING ANY REQUIREMENT, TERM OR CONDITION OF ANY CONTRACT OR OTHER DOCUMENT WITH RESPECT TO WHICH THIS CERTIFICATE MAY BE ISSUED OR MAY PERTAIN, THE INSURANCE AFFORDED BY THE POLICIES DESCRIBED HEREIN IS SUBJECT TO ALL THE TERMS, EXCLUSIONS AND CONDITIONS OF SUCH POLICIES. LIMITS SHOWN MAY HAVE BEEN REDUCED BY PAID CLAIMS.

INSR LTR	TYPE OF INSURANCE	ADDL INSD	SUBR WVD	POLICY NUMBER	POLICY EFF (MM/DD/YYYY)	POLICY EXP (MM/DD/YYYY)	LIMITS	
A	X COMMERCIAL GENERAL LIABILITY						EACH OCCURRENCE	$ 1,000,000
	CLAIMS-MADE X OCCUR	X		Z75944	7/1/2024	7/1/2025	DAMAGE TO RENTED PREMISES (Ea occurrence)	$ 250,000
	X PD Ded: $500						MED EXP (Any one person)	$ 10,000
							PERSONAL & ADV INJURY	$ 1,000,000
	GEN'L AGGREGATE LIMIT APPLIES PER:						GENERAL AGGREGATE	$ 3,000,000
	POLICY X PRO-JECT LOC						PRODUCTS - COMP/OP AGG	$ 3,000,000
	OTHER:							$
A	AUTOMOBILE LIABILITY						COMBINED SINGLE LIMIT (Ea accident)	$ 1,000,000
	X ANY AUTO			Z75944	7/1/2024	7/1/2025	BODILY INJURY (Per person)	$
	OWNED AUTOS ONLY / SCHEDULED AUTOS						BODILY INJURY (Per accident)	$
	X HIRED AUTOS ONLY / X NON-OWNED AUTOS ONLY						PROPERTY DAMAGE (Per accident)	$
								$
A	UMBRELLA LIAB X OCCUR			Z75944	7/1/2024	7/1/2025	EACH OCCURRENCE	$ 2,000,000
	X EXCESS LIAB CLAIMS-MADE						AGGREGATE	$ 2,000,000
	DED X RETENTION $ 0							$
B	WORKERS COMPENSATION AND EMPLOYERS' LIABILITY ANY PROPRIETOR/PARTNER/EXECUTIVE OFFICER/MEMBER EXCLUDED? (Mandatory in NH) Y / N: Y If yes, describe under DESCRIPTION OF OPERATIONS below	N / A		0692	1/1/2024	1/1/2025	X PER STATUTE / OTH-ER	
							E.L. EACH ACCIDENT	$ 2,000,000
							E.L. DISEASE - EA EMPLOYEE	$ 2,000,000
							E.L. DISEASE - POLICY LIMIT	$ 2,000,000
A	Leased/Rented Eqpt			Z75944	7/1/2024	7/1/2025	Ded: $500 / Limit:	200,000

DESCRIPTION OF OPERATIONS / LOCATIONS / VEHICLES (ACORD 101, Additional Remarks Schedule, may be attached if more space is required)

.

SEE ATTACHED ACORD 101

CERTIFICATE HOLDER

City of Santa Fe
Wastewater Division
Attn: Stan Holland
73 Paseo Real
Santa Fe, NM 87507

CANCELLATION

SHOULD ANY OF THE ABOVE DESCRIBED POLICIES BE CANCELLED BEFORE THE EXPIRATION DATE THEREOF, NOTICE WILL BE DELIVERED IN ACCORDANCE WITH THE POLICY PROVISIONS.

AUTHORIZED REPRESENTATIVE

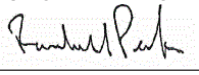

© 1988-2015 ACORD CORPORATION. All rights reserved.
The ACORD name and logo are registered marks of ACORD

AGENCY CUSTOMER ID: SUBSURF-01 DONISCHUK

LOC #: 1

ADDITIONAL REMARKS SCHEDULE

AGENCY	License # 0757776	NAMED INSURED
HUB International Insurance Services (SOW)		Sub Surface Contracting Inc 27A Paseo De River St Santa Fe, NM 87507
POLICY NUMBER		
SEE PAGE 1		
CARRIER	NAIC CODE	EFFECTIVE DATE: SEE PAGE 1
SEE PAGE 1	SEE P 1	

ADDITIONAL REMARKS

THIS ADDITIONAL REMARKS FORM IS A SCHEDULE TO ACORD FORM,

FORM NUMBER: ACORD 25 FORM TITLE: Certificate of Liability Insurance

Description of Operations/Locations/Vehicles:
Where required by written contract or agreement, the City of Santa Fe, Wastewater Division, City Representative, other parties reasonably requested in writing by the City of Santa Fe, and their officials, members, officers, employees, and agents are included as additional insured with respects to general liability, on a primary & non-contributory basis.

ACORD 101 (2008/01) © 2008 ACORD CORPORATION. All rights reserved.

The ACORD name and logo are registered marks of ACORD

ADDITIONAL INSURED - OWNERS, LESSEES OR CONTRACTORS - AUTOMATIC STATUS WHEN REQUIRED IN CONSTRUCTION AGREEMENT WITH YOU **CG-2033R(6-13)**

This endorsement modifies insurance provided under the following:

COMMERCIAL GENERAL LIABILITY COVERAGE PART

1. Section II - Who Is An Insured is amended to include as an additional insured:

a. Any person or organization for whom you are performing operations when you and such person or organization have agreed in writing in a contract or agreement that such person or organization be added as an additional insured on your policy; and

b. Any other person or organization you are required to add as an additional insured under the contract or agreement described in paragraph a above.

Such person or organization is an additional insured only with respect to liability for *bodily injury, property damage* or *personal and advertising injury* caused, in whole or in part, by:

a. Your acts or omissions; or

b. The acts or omissions of those acting on your behalf;

in the performance of your ongoing operations for the additional insured.

However the insurance afforded to such additional insured:

a. Only applies to the extent permitted by law; and

b. Will not be broader than that which you are required by the contract or agreement to provide for such additional insured.

A person's or organization's status as an additional insured under this endorsement ends when your operations for that additional insured are completed.

2. With respect to the insurance afforded these additional insureds, the following additional exclusions apply:

This insurance does not apply to:

a. *Bodily injury, property damage* or *personal and advertising injury* arising out of the rendering of, or the failure to render, any professional architectural, engineering or surveying services, including:

(1) The preparing, approving or failing to prepare or approve maps, shop drawings, opinions, reports, surveys, field orders, change orders or drawings and specifications; or

(2) Supervisory, inspection, architectural or engineering activities.

This exclusion applies even if the claims against any insured allege negligence or other wrongdoing in the supervision, hiring, employment, training or monitoring of others by that insured, if the *occurrence* which caused the *bodily injury* or *property damage* involved the rendering of or the failure to render any professional architectural, engineering or surveying services.

b. *Bodily injury* or *property damage* occurring after:

(1) All work, including materials, parts or equipment furnished in connection with such work, on the project (other than service, maintenance or repairs) to be performed by or on behalf of the additional insured(s) at the location of the covered operations has been completed; or

(2) That portion of *your work* out of which the injury or damage arises has been put to its intended use by any person or organization other than another contractor or subcontractor engaged in performing operations for a principal as a part of the same project.

3. With respect to the insurance afforded to these additional insureds, the following is added to Section III - Limits Of Insurance:

The most we will pay on behalf of the additional insured is the amount of insurance:

a. Required by the contract or agreement you have entered into with the additional insured; or

b. Available under the applicable Limits of Insurance shown in the Declarations;

whichever is less.

This endorsement shall not increase the applicable Limits of Insurance shown in the Declarations.

ADDITIONAL INSURED - COMPLETED OPERATIONS AUTOMATIC STATUS WHEN REQUIRED IN CONSTRUCTION AGREEMENT WITH YOU (OWNERS, LESSEES OR CONTRACTORS) **CG-7277(6-13)**

This endorsement modifies insurance provided under the following:

COMMERCIAL GENERAL LIABILITY COVERAGE PART

PRODUCTS-COMPLETED OPERATIONS LIABILITY COVERAGE FORM

1. Section II - Who Is An Insured is amended to include as an additional insured:

a. Any person(s) or organization(s) for whom you have performed operations if you and such person(s) or organization(s) have agreed in writing in a contract or agreement that such person(s) or organization(s) be added as additional insured on your policy for completed operations; and

b. Any other person(s) or organization(s) you are required to add as an additional insured under the contract or agreement described in paragraph a above.

Such person or organization is an additional insured only with respect to liability included in the *products-completed operations hazard* for *bodily injury* or *property damage* caused, in whole or in part, by *your work* performed for that additional insured at the location designated and described in the contract or agreement.

However:

a. The insurance afforded to such additional insured only applies to the extent permitted by law; and

b. If coverage provided to the additional insured is required by a contract or agreement, the insurance afforded to such additional insured will not be broader than that which you are required by the contract or agreement to provide for such additional insured.

2. This insurance does not apply to:

a. *Bodily injury* or *property damage* which occurs prior to the execution of the contract or agreement described in item 1; or

b. *Bodily injury* or *property damage* that occurs after the time period during which the contract or agreement described in item 1 requires you to add such person or organization onto your policy as an additional insured for completed operations; or

c. *Bodily injury* or *property damage* arising out of the rendering of, or the failure to render, any professional, architectural, engineering or surveying services, including:

(1) The preparing, approving or failing to prepare or approve maps, shop drawings, opinions, reports, surveys, field orders, change orders or drawings and specifications; or

(2) Supervisory, inspection, architectural or engineering activities.

This exclusion applies even if the claims against any insured allege negligence or other wrongdoing in the supervision, hiring, employment, training or monitoring of others by that insured, if the *occurrence* which caused the *bodily injury* or *property damage* involved the rendering of or the failure to render any professional services by or for you.

3. With respect to the insurance afforded to these additional insureds, the following is added to Section III - Limits Of Insurance:

If coverage provided to the additional insured is required by a contract or agreement, the most we will pay on behalf of the additional insured is the amount of insurance:

a. Required by the contract or agreement; or

b. Available under the applicable Limits of Insurance shown in the Declarations;

whichever is less.

This endorsement shall not increase the applicable Limits of Insurance shown in the Declarations.

PRIMARY AND NONCONTRIBUTORY - OTHER INSURANCE CONDITION

CG-2001R(4-13)

This endorsement modifies insurance provided under the following:

COMMERCIAL GENERAL LIABILITY COVERAGE PART

PRODUCTS-COMPLETED OPERATIONS LIABILITY COVERAGE FORM

RESIDENTIAL CARE FACILITY LIABILITY COVERAGE PART

The following is added to the Other Insurance Condition and supersedes any provision to the contrary:

Primary And Noncontributory Insurance

This insurance is primary to and will not seek contribution from any other insurance available to an additional insured under your policy provided that:

(1) The additional insured is a Named Insured under such other insurance; and

(2) You have agreed in writing in a contract or agreement that this insurance would be primary and would not seek contribution from any other insurance available to the additional insured.

Item # 23-0182
Munis# 3202929

CITY OF SANTA FE
AMENDMENT No. 1 TO
THE PRIORITY LINE REPLACEMENT
PRICE AGREEMENT
ITEM# 21-0484

This AMENDMENT No. 1 (the "Amendment") to the CITY OF SANTA FE AGREEMENT dated September 8, 2021 (the "Agreement"), between the City of Santa Fe (the "City") and Sub Surface Contracting Inc. (the "Contractor"). The date of this Amendment shall be the date when it is executed by the City.

RECITALS

A. Under the terms of the Agreement, Contractor has agreed to provide services for the Priority Line Replacement for the City of Santa Fe.

B. Pursuant to Article 14 of the Agreement, and for good and valuable consideration, the receipt and sufficiency of which are acknowledged by the parties, the City and the Contractor agree as follows:

1. COMPENSATION.

Article 2, paragraph A of the Agreement is amended to increase the "up to" amount by two million seven hundred and ninety thousand dollars ($2,790,000), so that Article 2, paragraph A reads in its entirety as follows:

A. The City shall pay to the Contractor in full payment for services satisfactorily performed at total amount up to four million six hundred forty nine thousand nine hundred and twenty seven dollars and ninety five cents ($4,649,927.95). The New Mexico gross receipts tax levied on the amounts payable under this Agreement totaling one hundred eighty nine thousand eight hundred forty three dollars and seventy five cents ($390,072.05) shall be paid by the City to the Contractor as described in Exhibit A attached hereto. **The total amount payable to the Contractor under this Agreement, including gross receipts tax and expenses, shall not five million forty thousand dollars ($5,040,000.). This amount is a maximum and not a guarantee that the work assigned to be performed by Contractor under this Agreement shall equal the amount stated herein. The parties do not intend for**

the Contractor to continue to provide services without compensation when the total compensation amount is reached. Contractor is responsible for notifying the City when the services provided under this Agreement reach the total compensation amount. In no event will the Contractor be paid for services provided in excess of the total compensation amount without this Agreement being amended in writing prior to those services in excess of the total compensation amount being provided.

2. AGREEMENT IN FULL FORCE.

Except as specifically provided in this Amendment, the Agreement remains and shall remain in full force and effect, in accordance with its terms.

IN WITNESS WHEREOF, the parties have executed this Amendment No.1 to the City of Santa Fe Price Agreement as of the dates set forth below.

CITY OF SANTA FE:

ALAN WEBBER, MAYOR

Date: May 1, 2023

CONTRACTOR:
SUB SURFACE CONTRACTING.

NAME & TITLE

Date: 3-28-2023
CRS# 02104256000
Registration #46991

ATTEST:

KRISTINE BUSTOS MIHELCIC ,CITY CLERK XIV
GB MTG 04/26/23

APPROVED AS TO FORM:

Patricia Feghali
Patricia Feghali (Mar 24, 2023 10:06 MDT)

PATRICIA FEGHALI, ASSISTANT CITY ATTORNEY

APPROVED FOR FINANCES:

Emily K. Oster
Emily K. Oster (Apr 30, 2023 22:28 MDT)

EMILY OSTER, FINANCE DIRECTOR

5050395.572970 WTR1950536
Org/Obj

City of Santa Fe, New Mexico

memo

Date: March 28, 2023

To: Finance Committee / Public Works-Public Utilities Committee

Via: Emily Oster, Finance Director EKO
Travis Dutton-Leyda, Chief Procurement Officer TDL
John Dupuis, Public Utilities Department Director JD
Jesse D. Roach, Water Division Director

From: Michael R. Moya, T&D Section Manager
Bill Huey, Water Division Engineer Associate BH

RE: Request approval of Amendment #1 to add funds to the Priority Line Replacement Price Agreement, CIP # 3058 Sub Surface Constructionin the amount of $2,790,000 including NMGRT for the remainder of the contract term (FY2024-25).

ITEM AND ISSUE:

The Water Division requests increasing the amount of award for bid number '21/43/B for the FY 22/23 Priority Line Replacement Price Agreement, CIP # 3058 to Sub Surface Construction by $2,790,000.00 inclusive of NMGRT for the remaining three (3) Fiscal Years, FY 2022-23 until FY2024-25.

Approval of the BAR – Budget Increase in the amount of $5,000,000 from the Water Enterprise Fund cash balance into the Water CIP fund for FY 2023, of which $2,790,000 is for this amendment.

BACKGROUND AND SUMMARY:

City Council has awarded bid number '21/43/B for the Priority Line Replacement Price Agreement, CIP # 3058 to Sub Surface Contracting, Inc. (Sub Surface) and A.A.C. Construction, LLC (AAC) for four (4) Fiscal Years, FY 2021-22 until FY2024-25 in the amount of $3,500,000 inclusive of NMGRT. Future funding was dependent upon the availability of CIP funds.

The Priority Line Replacement Price Agreement is an on-call requirements contract, with the Water Division issuing work orders as needed for work such as water line replacements. The contract is funded from CIP for Transmission and Distribution to work on their infrastructure.

Current expenditures on this contract are still at or below the initial contract amount. Current work on the contract will need additional funds. The contract funding needed for the completion of the contract term for Sub Surface is $2,790,000 inclusive of NMGRT. Total funding for the entire contract with AAC will be $5,040,000 inclusive of NMGRT. Funding for this amendment #1 will be available upon approval of the BAR/ Increase attached to Item D, AAC PLR Amendment #1 on this agenda. The BAR is in the amount of $5,000,000 including $2,790,000 for Sub Surface PLR #1 and $2,210,000 for AAC PLR #1 for a combined amount of $2,790,000 for a combined amount of $5,000,000.

PROCUREMENT:
21/43/B for the FY 2022 Priority Line Replacement

CONTRACT NUMBER:

A.A.C Construction # 3202778.

FUNDING SOURCE:
The funding source is:
Water Enterprise Fund/ CIP
FY 2023
Fund Name/Number: Water Enterprise Fund/ 500
Munis Org Name/Number: Water CIP / 5050395
Munis Object Name/Number: WIP Construction / 572970

RECOMMENDATION:

The Water Division recommends:

- Review and approval of increase of contract amount to Sub Surface Construction for the Priority Line Replacement Price Agreement, CIP # 3058 under ITB No. '21/43/B of $2,790,000 for a total amount of $5,040,000 inclusive of NMGRT through FY2024-25.

Log # *{Finance use only}*:	
Batch # *{Finance use only}*:	

City of Santa Fe, New Mexico
BUDGET AMENDMENT RESOLUTION (BAR)

DEPARTMENT / DIVISION NAME	DATE
PUD/Water/CIP	3/17/2023

ITEM DESCRIPTION	ORG	OBJECT	PROJECT	INCREASE	DECREASE
EXPENDITURES				*{enter as positive #}*	*{enter as negative #}*
Water CIP WIP Construction	5050395	572970	WTR1950535	5,000,000	
REVENUES				*{enter as negative #}*	*{enter as positive #}*
				$ 5,000,000	$ -

JUSTIFICATION: *(use additional page if needed)*
--Attach supporting documentation/memo

Budget Increase from Cash Balance in Water Enterprise Fund for Priority Line Replacement

Price Agreements Amendments #1 to A.A.C Construction and Sub Surface for

FY 23 CIP3058

{Complete section below if BAR results in a net change to ANY Fund}

Fund(s) Affected	Fund Balance Increase/(Decrease)
505	(5,000,000)
TOTAL:	**(5,000,000)**

Maya Martinez — 3/17/2023
Prepared By *{print name}* — Date

Division Director Signature *{optional}* — Date

John Dupuis (Apr 4, 2023 17:41 MDT)
Department Director Signature — Date

{Use this form for Finance Committee/ City Council agenda items ONLY}

CITY COUNCIL APPROVAL

City Council Approval Date

Agenda Item #:

Andy Hopkins — 4/5/23
Budget Officer — Date

Finance Director *{≤ $5,000}* — Date

City Manager *{≤ $60,000}* — Date

City of Santa Fe

Real Estate Summary of Contracts, Agreements, Amendments & Leases

Section to be completed by department

1. Munis Contract # **3202929**

Contractor: **Sub Surface Contracting**

Description: **CIP# 3058 Priority Line Replacement**

Contract ☐ Agreement ☉ Lease / Rent ☐ Amendment ☐

Term Start Date: **as approved** Term End Date: **6/30/25**

☑ Approved by Council Date: **Pending**

Contract / Lease: Contract $2,250,000

Amendment # 1 to the Original Contract / Lease # 21-0484

Increase/(Decrease) Amount $ 2,790,000

Extend Termination Date to: N/A

☉ Approved by Council Date: Pending

Amendment is for:

2. **HISTORY of Contract, Amendments & Lease / Rent - Please Elaborate** (option: attach spreadsheet if multiple amendments)

Original Contract # 21-0484 $2,250,000 approved 9/8/21

3. **Procurement History: 21/43/B**

Purchasing Officer Review: Apr 5, 2023 Date:

Comment & Exceptions: Amending compensation

4. **Funding Source: Water Enterprise Fund CIP** **Org / Object: 5050395.572970**

Andy Hopkins
Andy Hopkins (Apr 5, 2023 17:18 MDT)

Budget Officer Approval: Apr 5, 2023 Date:

Comment & Exceptions:

Staff Contact who completed this form: Maya Martinez Phone # **4271**

Email: **mfmartinez@santafenm.gov**

To be recorded by City Clerk:

Clerk #

Date of Execution:

City of Santa Fe

Treasury Department
200 Lincoln Ave.
Santa Fe, New Mexico 87504-0909
505-955-6551

BUSINESS REGISTRATION

Business Name: SUB SURFACE CONTRACTING INC.
DBA: SUB SURFACE CONTRACTING INC.

Business Location: 27 PASEO DE RIVER A
SANTA FE , NM 87507

CRS Number: 02104256000

Owner: SUB SURFACE CONTRACTING INC.

License Number: 46991

License Type: Business License - Renewable

Issued Date: March 28, 2022

Classification: Contractor - Specialty

Expiration Date: March 28, 2023

Fees Paid: $35.00

SUB SURFACE CONTRACTING INC.
27 A PASEO DE RIVER
SANTA FE, NM 87507

THIS IS NOT A CONSTRUCTION PERMIT OR SIGN PERMIT. APPROPRIATE PERMITS MUST BE OBTAINED FROM THE CITY OF SANTA FE BUILDING PERMIT DIVISION PRIOR TO COMMENCEMENT OF ANY CONSTRUCTION OR THE INSTALLATION OF ANY EXTERIOR SIGN.

THIS REGISTRATION/LICENSE IS NOT TRANSFERRABLE TO OTHER BUSINESSES OR PREMISES.

TO BE POSTED IN A CONSPICUOUS PLACE

Ver 1.6 2.7.2020

ACORD

CERTIFICATE OF LIABILITY INSURANCE

DATE (MM/DD/YYYY) 12/26/2022

THIS CERTIFICATE IS ISSUED AS A MATTER OF INFORMATION ONLY AND CONFERS NO RIGHTS UPON THE CERTIFICATE HOLDER. THIS CERTIFICATE DOES NOT AFFIRMATIVELY OR NEGATIVELY AMEND, EXTEND OR ALTER THE COVERAGE AFFORDED BY THE POLICIES BELOW. THIS CERTIFICATE OF INSURANCE DOES NOT CONSTITUTE A CONTRACT BETWEEN THE ISSUING INSURER(S), AUTHORIZED REPRESENTATIVE OR PRODUCER, AND THE CERTIFICATE HOLDER.

IMPORTANT: If the certificate holder is an ADDITIONAL INSURED, the policy(ies) must have ADDITIONAL INSURED provisions or be endorsed. If SUBROGATION IS WAIVED, subject to the terms and conditions of the policy, certain policies may require an endorsement. A statement on this certificate does not confer rights to the certificate holder in lieu of such endorsement(s).

PRODUCER License # 0757776 HUB International Insurance Services (SOW) 2905 Rodeo Park Drive East Building 6, Suite 100 Santa Fe, NM 87505	CONTACT NAME: PHONE (A/C, No, Ext): (505) 982-4296 FAX (A/C, No): (866) 621-0427 E-MAIL ADDRESS:
	INSURER(S) AFFORDING COVERAGE — NAIC #
	INSURER A : ACUITY, A Mutual Insurance Company — 14184
INSURED Sub Surface Contracting Inc 27A Paseo De River St Santa Fe, NM 87507	INSURER B : Builders Trust of New Mexico
	INSURER C :
	INSURER D :
	INSURER E :
	INSURER F :

COVERAGES **CERTIFICATE NUMBER:** **REVISION NUMBER:**

THIS IS TO CERTIFY THAT THE POLICIES OF INSURANCE LISTED BELOW HAVE BEEN ISSUED TO THE INSURED NAMED ABOVE FOR THE POLICY PERIOD INDICATED. NOTWITHSTANDING ANY REQUIREMENT, TERM OR CONDITION OF ANY CONTRACT OR OTHER DOCUMENT WITH RESPECT TO WHICH THIS CERTIFICATE MAY BE ISSUED OR MAY PERTAIN, THE INSURANCE AFFORDED BY THE POLICIES DESCRIBED HEREIN IS SUBJECT TO ALL THE TERMS, EXCLUSIONS AND CONDITIONS OF SUCH POLICIES. LIMITS SHOWN MAY HAVE BEEN REDUCED BY PAID CLAIMS.

INSR LTR	TYPE OF INSURANCE	ADDL INSD	SUBR WVD	POLICY NUMBER	POLICY EFF (MM/DD/YYYY)	POLICY EXP (MM/DD/YYYY)	LIMITS	
A	X COMMERCIAL GENERAL LIABILITY			Z75944	7/1/2022	7/1/2023	EACH OCCURRENCE	$ 1,000,000
	CLAIMS-MADE X OCCUR						DAMAGE TO RENTED PREMISES (Ea occurrence)	$ 250,000
	X PD Ded: $500						MED EXP (Any one person)	$ 10,000
	GEN'L AGGREGATE LIMIT APPLIES PER:						PERSONAL & ADV INJURY	$ 1,000,000
	POLICY X PRO-JECT LOC						GENERAL AGGREGATE	$ 3,000,000
	OTHER:						PRODUCTS - COMP/OP AGG	$ 3,000,000
								$
A	AUTOMOBILE LIABILITY			Z75944	7/1/2022	7/1/2023	COMBINED SINGLE LIMIT (Ea accident)	$ 1,000,000
	X ANY AUTO						BODILY INJURY (Per person)	$
	OWNED AUTOS ONLY / SCHEDULED AUTOS						BODILY INJURY (Per accident)	$
	X HIRED AUTOS ONLY / X NON-OWNED AUTOS ONLY						PROPERTY DAMAGE (Per accident)	$
								$
A	UMBRELLA LIAB X OCCUR			Z75944	7/1/2022	7/1/2023	EACH OCCURRENCE	$ 2,000,000
	X EXCESS LIAB CLAIMS-MADE						AGGREGATE	$ 2,000,000
	DED X RETENTION $ 0							$
B	WORKERS COMPENSATION AND EMPLOYERS' LIABILITY Y / N	N / A		0692	1/1/2023	1/1/2024	PER STATUTE / OTH-ER	
	ANY PROPRIETOR/PARTNER/EXECUTIVE OFFICER/MEMBER EXCLUDED? Y (Mandatory in NH)						E.L. EACH ACCIDENT	$ 2,000,000
	If yes, describe under DESCRIPTION OF OPERATIONS below						E.L. DISEASE - EA EMPLOYEE	$ 2,000,000
							E.L. DISEASE - POLICY LIMIT	$ 2,000,000
A	Leased/Rented Eqpt			Z75944	7/1/2022	7/1/2023	Ded: $500/Limit:	200,000

DESCRIPTION OF OPERATIONS / LOCATIONS / VEHICLES (ACORD 101, Additional Remarks Schedule, may be attached if more space is required)

CERTIFICATE HOLDER

City of Santa Fe
Public Utilities Department
801 West San Mateo
Santa Fe, NM 87505

CANCELLATION

SHOULD ANY OF THE ABOVE DESCRIBED POLICIES BE CANCELLED BEFORE THE EXPIRATION DATE THEREOF, NOTICE WILL BE DELIVERED IN ACCORDANCE WITH THE POLICY PROVISIONS.

AUTHORIZED REPRESENTATIVE

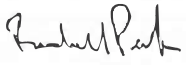

© 1988-2015 ACORD CORPORATION. All rights reserved.
The ACORD name and logo are registered marks of ACORD

CITY OF SANTA FE PROCUREMENT CHECKLIST

Contractor Name: Sub Surface Contracting, Inc.

Procurement Title: 21/43/B Priority Line Replacement Price Agreement, CIP # 3058

Procurement Method: State Price Agreement ☐ *Cooperative* ☐ *Sole Source* ☐ *Other* ☐ _____

Exempt ☐ *Request For Proposal* (RFP) ☒ *Invitation To Bid (ITB)* ☐ *Contract under 60K* ☐ *Contract over 60K* ☐

Department Requesting Bill Huey Water Division, PUD

Procurement Requirements:
A procurement file shall be maintained for all contracts, regardless of the method of procurement. The procurement file shall contain the basis on which the award is made, all submitted bids, all evaluation materials, score sheets, quotations and all other documentation related to or prepared in conjunction with evaluation, negotiation, and the award process. The procurement shall contain a written determination from the Requesting Department, signed by the purchasing officer, setting forth the reasoning for the contract award decision before submitting to the Committees. .

REQUIRED DOCUMENTS FOR APPROVAL BY PURCHASING*

YES	N/A	
☒	☐	Approved Procurement Checklist (by Purchasing)
☒	☐	Memo addressed to City Manager (under 60K) Committees/City Council (over 60K)
☐	☒	State Price Agreement
☐	☒	RFP
☐	☒	Evaluation Committee Report
☒	☐	ITB
☒	☐	Bib Tab
☐	☒	Quotes (3 valid current quotes)
☐	☒	Cooperative Agreement
☐	☒	Sole Source Request and Determination Form
☐	☒	Contractors Exempt Letter
☒	☐	Purchasing Officers approval for exempt procurement
☐	☒	BAR
☐	☒	FIR
☒	☐	Executed Contract, Agreement or Amendment
☒	☐	Current Business Registration and CRS numbers on contract or agreement
☒	☐	Summary of Contracts and Agreements form
☐	☒	Certificate of Insurance
☐	☐	All documentation presented to Committees
☐	☐	Other: _____

Public Utilities Dept / Water Division/Bill Huey (Bill Huey)	Engineer	
Department Rep Printed Name (attesting that all information included)	Title	Date
	Contracts Supervisor	Apr 5, 2023
Purchasing Officer (attesting that all information is reviewed)	Title	Date

Include all other substantive documents and records of communication that pertain to the procurement and any resulting contract.

*

City of Santa Fe, New Mexico

memo

Date: August 9, 2021

To: Public Works-Public Utilities Committee / Finance Committee

From: Michael R. Moya, T&D Section Manager MM
Bill Huey, Water Division Engineer Associate BH

Via: Jesse D. Roach, Water Division Director JR

RE: Request to award bid number '21/43/B for the FY 2022 Priority Line Replacement Price Agreement, CIP # 3058 to Sub Surface Contracting, Inc. and A.A.C. Construction, LLC.; Request approval of a Budget Adjustment Request/Budget increase in the amount of $3,500,000.

ITEM AND ISSUE:

The Water Division requests award of bid number '21/43/B for the FY 21/22 Priority Line Replacement Price Agreement, CIP # 3058 to Sub Surface Contracting, Inc. and A.A.C. Construction, LLC for the remainder of four (4) Fiscal Years, FY 2021-22 until FY2024-25. Initial funding of $3,500,000 inclusive NMGRT is requested for FY2021-22. Funding is broken down for each contractor as follows: $2,250,000.00 inclusive of NMGRT for Sub Surface and $1,250,000.00 inclusive of NMGRT for AAC. .Future funding will depend upon the availability of CIP funds.

BACKGROUND AND SUMMARY:

The Priority Line Replacement Price Agreement is an on-call requirements contract, with the Water Division issuing work orders as needed for work such as water line replacements. The contract is funded from CIP for Transmission and Distribution to work on their infrastructure. The initial Contract amount is limited to $3,500,000.00 inclusive of New Mexico Gross Receipt Tax (NMGRT).

This is was multi-contractor award ITB to set the applicable Bid Items for future work. The ITB was only used to select the winning Contractors. Future work will be assigned under fully signed Work Orders for planned work on will be followed with a signed Work Order for Emergency repair. The exact type of work required will be used to select from the applicable Bid Items. Not every Bit Item is anticipated to be used.

The initial contract period is Fiscal Years 2021-2025. The bids for this project were opened on June 17, 2021 and were subsequently evaluated for completeness and accuracy. The low bid in the amount of $892,448.25 plus NMGRT was submitted by Sub Surface Contracting, Inc. A second acceptable bid of $933,364.22 was submitted by A.A.C. Construction, LLC. The Water Division is planning on replacing pipe on multiple streets in the Apache, San Ildefonso, San Felipe, MaClovia, Isabel and Rosina neighborhood, as well as Bishops Lodge between Artist and Murales Roads, Lorenzo Road, Malaga

Lane, Pino Road, San Isabel Street, Sosaya Street, Camino Santander and Camino Santiago/Camino Matias.

A summary of the bids is provided below:

Bidders	Total Bid without NMGRT	Bid Including Veterans preference without NMGRT
Sub Surface Contracting, Inc.	$892,448.25	$821,052.39
A.A.C. Construction, LLC	$933,364.22	
TLC Plumbing & Utility	$1,158,308.40	
Blueline Construction, Inc.	$1,476,101.57	
Allied 360 Construction, LLC	$2,364,321.74	

CONTRACT NUMBER:
The FY22 Munis contract number:
Sub Surface Contracting # 3202929
A.A.C Construction # 3202927

FUNDING SOURCE:
The funding source is:
Water Enterprise Fund/ CIP
FY 2022
Fund Name/Number: Water Enterprise Fund/ 500
Munis Org Name/Number: Water CIP / 5050395
Munis Object Name/Number: WIP Construction / 572970

Funds for this work will be available in Business Unit, Line Item 5050395.572970 in the amount of $1,600,000.00 plus NMGRT upon approval of the BAR Budget Increase.

RECOMMENDATION:

The Water Division recommends:

- Review and approval of award of contracts to Sub Surface Contracting, Inc. and A.A.C Construction, LLC for the FY 21/22 Priority Line Replacement Price Agreement, CIP # 3058 under ITB No. '21/43/B for a total amount of $3,500,000.00 inclusive of NMGRT for FY2021-22.

- Approval of the BAR – Budget Increase in the amount of $3,500,000 from the Water Enterprise Fund cash balance into the Water CIP fund for FY 2022.

- Forwarding and recommendation of approval of award and contract to the Finance Committee for their consideration and approval to the Governing Body for their final consideration and approval.

SUBSURF-01 DONISCHUK

CERTIFICATE OF LIABILITY INSURANCE

DATE (MM/DD/YYYY) 5/20/2021

THIS CERTIFICATE IS ISSUED AS A MATTER OF INFORMATION ONLY AND CONFERS NO RIGHTS UPON THE CERTIFICATE HOLDER. THIS CERTIFICATE DOES NOT AFFIRMATIVELY OR NEGATIVELY AMEND, EXTEND OR ALTER THE COVERAGE AFFORDED BY THE POLICIES BELOW. THIS CERTIFICATE OF INSURANCE DOES NOT CONSTITUTE A CONTRACT BETWEEN THE ISSUING INSURER(S), AUTHORIZED REPRESENTATIVE OR PRODUCER, AND THE CERTIFICATE HOLDER.

IMPORTANT: If the certificate holder is an ADDITIONAL INSURED, the policy(ies) must have ADDITIONAL INSURED provisions or be endorsed. If SUBROGATION IS WAIVED, subject to the terms and conditions of the policy, certain policies may require an endorsement. A statement on this certificate does not confer rights to the certificate holder in lieu of such endorsement(s).

PRODUCER License # 0757776 HUB International Insurance Services (SOW) 2905 Rodeo Park Drive East Building 6, Suite 100 Santa Fe, NM 87505	CONTACT NAME: Michelle Vialpando PHONE (A/C, No, Ext): (505) 992-1873 FAX (A/C, No): (866) 621-0427 E-MAIL ADDRESS: michelle.vialpando@hubinternational.com
	INSURER(S) AFFORDING COVERAGE — NAIC #
	INSURER A : ACUITY, A Mutual Insurance Company — 14184
INSURED Sub Surface Contracting Inc 27A Paseo De River St Santa Fe, NM 87507	INSURER B : Builders Trust of New Mexico
	INSURER C :
	INSURER D :
	INSURER E :
	INSURER F :

COVERAGES **CERTIFICATE NUMBER:** **REVISION NUMBER:**

THIS IS TO CERTIFY THAT THE POLICIES OF INSURANCE LISTED BELOW HAVE BEEN ISSUED TO THE INSURED NAMED ABOVE FOR THE POLICY PERIOD INDICATED. NOTWITHSTANDING ANY REQUIREMENT, TERM OR CONDITION OF ANY CONTRACT OR OTHER DOCUMENT WITH RESPECT TO WHICH THIS CERTIFICATE MAY BE ISSUED OR MAY PERTAIN, THE INSURANCE AFFORDED BY THE POLICIES DESCRIBED HEREIN IS SUBJECT TO ALL THE TERMS, EXCLUSIONS AND CONDITIONS OF SUCH POLICIES. LIMITS SHOWN MAY HAVE BEEN REDUCED BY PAID CLAIMS.

INSR LTR	TYPE OF INSURANCE	ADDL INSD	SUBR WVD	POLICY NUMBER	POLICY EFF (MM/DD/YYYY)	POLICY EXP (MM/DD/YYYY)	LIMITS	
A	X COMMERCIAL GENERAL LIABILITY CLAIMS-MADE X OCCUR X PD Ded: $500 GEN'L AGGREGATE LIMIT APPLIES PER: POLICY X PRO-JECT LOC OTHER:			Z75944	7/1/2020	7/1/2021	EACH OCCURRENCE DAMAGE TO RENTED PREMISES (Ea occurrence) MED EXP (Any one person) PERSONAL & ADV INJURY GENERAL AGGREGATE PRODUCTS - COMP/OP AGG	$ 1,000,000 $ 250,000 $ 10,000 $ 1,000,000 $ 3,000,000 $ 3,000,000
A	AUTOMOBILE LIABILITY X ANY AUTO OWNED AUTOS ONLY SCHEDULED AUTOS X HIRED AUTOS ONLY X NON-OWNED AUTOS ONLY			Z75944	7/1/2020	7/1/2021	COMBINED SINGLE LIMIT (Ea accident) BODILY INJURY (Per person) BODILY INJURY (Per accident) PROPERTY DAMAGE (Per accident)	$ 1,000,000 $ $ $
A	UMBRELLA LIAB X OCCUR X EXCESS LIAB CLAIMS-MADE DED X RETENTION $ 0			Z75944	7/1/2020	7/1/2021	EACH OCCURRENCE AGGREGATE	$ 2,000,000 $ 2,000,000
B	WORKERS COMPENSATION AND EMPLOYERS' LIABILITY ANY PROPRIETOR/PARTNER/EXECUTIVE OFFICER/MEMBER EXCLUDED? (Mandatory in NH) Y/N: Y If yes, describe under DESCRIPTION OF OPERATIONS below	N/A		0692	1/1/2021	1/1/2022	X PER STATUTE OTH-ER E.L. EACH ACCIDENT E.L. DISEASE - EA EMPLOYEE E.L. DISEASE - POLICY LIMIT	$ 2,000,000 $ 2,000,000 $ 2,000,000
A	Leased/Rented Eqpt			Z75944	7/1/2020	7/1/2021	Ded: $500 / Limit	200,000

DESCRIPTION OF OPERATIONS / LOCATIONS / VEHICLES (ACORD 101, Additional Remarks Schedule, may be attached if more space is required)

CERTIFICATE HOLDER

City of Santa Fe
Public Utilities Department
801 West San Mateo
Santa Fe, NM 87505

CANCELLATION

SHOULD ANY OF THE ABOVE DESCRIBED POLICIES BE CANCELLED BEFORE THE EXPIRATION DATE THEREOF, NOTICE WILL BE DELIVERED IN ACCORDANCE WITH THE POLICY PROVISIONS.

AUTHORIZED REPRESENTATIVE

© 1988-2015 ACORD CORPORATION. All rights reserved.
The ACORD name and logo are registered marks of ACORD

SUBSURF-01 DONISCHUK

CERTIFICATE OF LIABILITY INSURANCE

DATE (MM/DD/YYYY) 5/20/2021

THIS CERTIFICATE IS ISSUED AS A MATTER OF INFORMATION ONLY AND CONFERS NO RIGHTS UPON THE CERTIFICATE HOLDER. THIS CERTIFICATE DOES NOT AFFIRMATIVELY OR NEGATIVELY AMEND, EXTEND OR ALTER THE COVERAGE AFFORDED BY THE POLICIES BELOW. THIS CERTIFICATE OF INSURANCE DOES NOT CONSTITUTE A CONTRACT BETWEEN THE ISSUING INSURER(S), AUTHORIZED REPRESENTATIVE OR PRODUCER, AND THE CERTIFICATE HOLDER.

IMPORTANT: If the certificate holder is an ADDITIONAL INSURED, the policy(ies) must have ADDITIONAL INSURED provisions or be endorsed. If SUBROGATION IS WAIVED, subject to the terms and conditions of the policy, certain policies may require an endorsement. A statement on this certificate does not confer rights to the certificate holder in lieu of such endorsement(s).

PRODUCER License # 0757776 HUB International Insurance Services (SOW) 2905 Rodeo Park Drive East Building 6, Suite 100 Santa Fe, NM 87505	CONTACT NAME: Michelle Vialpando PHONE (A/C, No, Ext): (505) 992-1873 FAX (A/C, No): (866) 621-0427 E-MAIL ADDRESS: michelle.vialpando@hubinternational.com
INSURED Sub Surface Contracting Inc 27A Paseo De River St Santa Fe, NM 87507	INSURER(S) AFFORDING COVERAGE — NAIC # INSURER A : ACUITY, A Mutual Insurance Company — 14184 INSURER B : Builders Trust of New Mexico INSURER C : INSURER D : INSURER E : INSURER F :

COVERAGES **CERTIFICATE NUMBER:** **REVISION NUMBER:**

THIS IS TO CERTIFY THAT THE POLICIES OF INSURANCE LISTED BELOW HAVE BEEN ISSUED TO THE INSURED NAMED ABOVE FOR THE POLICY PERIOD INDICATED. NOTWITHSTANDING ANY REQUIREMENT, TERM OR CONDITION OF ANY CONTRACT OR OTHER DOCUMENT WITH RESPECT TO WHICH THIS CERTIFICATE MAY BE ISSUED OR MAY PERTAIN, THE INSURANCE AFFORDED BY THE POLICIES DESCRIBED HEREIN IS SUBJECT TO ALL THE TERMS, EXCLUSIONS AND CONDITIONS OF SUCH POLICIES. LIMITS SHOWN MAY HAVE BEEN REDUCED BY PAID CLAIMS.

INSR LTR	TYPE OF INSURANCE	ADDL INSD	SUBR WVD	POLICY NUMBER	POLICY EFF (MM/DD/YYYY)	POLICY EXP (MM/DD/YYYY)	LIMITS	
A	X COMMERCIAL GENERAL LIABILITY CLAIMS-MADE X OCCUR X PD Ded: $500 GEN'L AGGREGATE LIMIT APPLIES PER: POLICY X PRO-JECT LOC OTHER:			Z75944	7/1/2021	7/1/2022	EACH OCCURRENCE DAMAGE TO RENTED PREMISES (Ea occurrence) MED EXP (Any one person) PERSONAL & ADV INJURY GENERAL AGGREGATE PRODUCTS - COMP/OP AGG	$ 1,000,000 $ 250,000 $ 10,000 $ 1,000,000 $ 3,000,000 $ 3,000,000
A	AUTOMOBILE LIABILITY X ANY AUTO OWNED AUTOS ONLY SCHEDULED AUTOS X HIRED AUTOS ONLY X NON-OWNED AUTOS ONLY			Z75944	7/1/2021	7/1/2022	COMBINED SINGLE LIMIT (Ea accident) BODILY INJURY (Per person) BODILY INJURY (Per accident) PROPERTY DAMAGE (Per accident)	$ 1,000,000 $ $ $
A	UMBRELLA LIAB X OCCUR X EXCESS LIAB CLAIMS-MADE DED X RETENTION $ 0			Z75944	7/1/2021	7/1/2022	EACH OCCURRENCE AGGREGATE	$ 2,000,000 $ 2,000,000
B	WORKERS COMPENSATION AND EMPLOYERS' LIABILITY ANY PROPRIETOR/PARTNER/EXECUTIVE OFFICER/MEMBER EXCLUDED? (Mandatory in NH) Y/N: Y If yes, describe under DESCRIPTION OF OPERATIONS below	N/A		0692	1/1/2021	1/1/2022	X PER STATUTE OTH-ER E.L. EACH ACCIDENT E.L. DISEASE - EA EMPLOYEE E.L. DISEASE - POLICY LIMIT	$ 2,000,000 $ 2,000,000 $ 2,000,000
A	Leased/Rented Eqpt			Z75944	7/1/2021	7/1/2022	Ded: $500 / Limit	200,000

DESCRIPTION OF OPERATIONS / LOCATIONS / VEHICLES (ACORD 101, Additional Remarks Schedule, may be attached if more space is required)

CERTIFICATE HOLDER

City of Santa Fe
Public Utilities Department
801 West San Mateo
Santa Fe, NM 87505

CANCELLATION

SHOULD ANY OF THE ABOVE DESCRIBED POLICIES BE CANCELLED BEFORE THE EXPIRATION DATE THEREOF, NOTICE WILL BE DELIVERED IN ACCORDANCE WITH THE POLICY PROVISIONS.

AUTHORIZED REPRESENTATIVE

© 1988-2015 ACORD CORPORATION. All rights reserved.
The ACORD name and logo are registered marks of ACORD

City of Santa Fe

Treasury Department
200 Lincoln Ave.
Santa Fe, New Mexico 87504-0909
505-955-6551

BUSINESS REGISTRATION

Business Name: SUB SURFACE CONTRACTING INC.
DBA: SUB SURFACE CONTRACTING INC.

Business Location: 27 PASEO DE RIVER A
SANTA FE , NM 87507

CRS Number: 02104256000

Owner: SUB SURFACE CONTRACTING INC.

License Number: 46991

License Type: Business License - Renewable

Issued Date: April 01, 2021

Classification: Contractor - Specialty

Expiration Date: April 01, 2022

Fees Paid: $35.00

SUB SURFACE CONTRACTING INC.
27 A PASEO DE RIVER
SANTA FE, NM 87507

THIS IS NOT A CONSTRUCTION PERMIT OR SIGN PERMIT. APPROPRIATE PERMITS MUST BE OBTAINED FROM THE CITY OF SANTA FE BUILDING PERMIT DIVISION PRIOR TO COMMENCEMENT OF ANY CONSTRUCTION OR THE INSTALLATION OF ANY EXTERIOR SIGN.

THIS REGISTRATION/LICENSE IS NOT TRANSFERRABLE TO OTHER BUSINESSES OR PREMISES.

TO BE POSTED IN A CONSPICUOUS PLACE

CITY OF SANTA FE PROCUREMENT CHECKLIST

Contractor Name: Sub Surface Contracting, Inc.

Procurement Title: 21/43/B Priority Line Replacement Price Agreement, CIP # 3058

Procurement Method: State Price Agreement ☐ *Cooperative* ☐ *Sole Source* ☐ *Other* ☐ _____

Exempt ☐ *Request For Proposal* (RFP) ☒ *Invitation To Bid (ITB)* ☐ *Contract under 60K* ☐ *Contract over 60K* ☐

Department Requesting Bill Huey Water Division, PUD

Procurement Requirements:
A procurement file shall be maintained for all contracts, regardless of the method of procurement. The procurement file shall contain the basis on which the award is made, all submitted bids, all evaluation materials, score sheets, quotations and all other documentation related to or prepared in conjunction with evaluation, negotiation, and the award process. The procurement shall contain a written determination from the Requesting Department, signed by the purchasing officer, setting forth the reasoning for the contract award decision before submitting to the Committees. .

REQUIRED DOCUMENTS FOR APPROVAL BY PURCHASING*

YES	N/A	
☒	☐	Approved Procurement Checklist (by Purchasing)
☒	☐	Memo addressed to City Manager (under 60K) Committees/City Council (over 60K)
☐	☒	State Price Agreement
☐	☒	RFP
☐	☒	Evaluation Committee Report
☒	☐	ITB
☒	☐	Bib Tab
☐	☒	Quotes (3 valid current quotes)
☐	☒	Cooperative Agreement
☐	☒	Sole Source Request and Determination Form
☐	☒	Contractors Exempt Letter
☒	☐	Purchasing Officers approval for exempt procurement
☐	☒	BAR
☐	☒	FIR
☒	☐	Executed Contract, Agreement or Amendment
☒	☐	Current Business Registration and CRS numbers on contract or agreement
☒	☐	Summary of Contracts and Agreements form
☐	☒	Certificate of Insurance
☐	☐	All documentation presented to Committees
☐	☐	Other: _____

Public Utilities Dept / Water Division/Bill Huey Bill Huey Engineer 8/17/21
Department Rep Printed Name (attesting that all information included) Title Date

Fran Dunaway
Fran Dunaway (Aug 23, 2021 12:29 MDT)
Chief Procurement Officer Aug 23, 2021
Purchasing Officer (attesting that all information is reviewed) Title Date

Include all other substantive documents and records of communication that pertain to the procurement and any resulting contract.

*

City of Santa Fe, New Mexico

memo

Date: August 9, 2021

To: Public Works-Public Utilities Committee / Finance Committee

From: Michael R. Moya, T&D Section Manager MM
Bill Huey, Water Division Engineer Associate BH

Via: Jesse D. Roach, Water Division Director JR

RE: Request to award bid number '21/43/B for the FY 2022 Priority Line Replacement Price Agreement, CIP # 3058 to Sub Surface Contracting, Inc. and A.A.C. Construction, LLC.; Request approval of a Budget Adjustment Request/Budget increase in the amount of $3,500,000.

ITEM AND ISSUE:

The Water Division requests award of bid number '21/43/B for the FY 21/22 Priority Line Replacement Price Agreement, CIP # 3058 to Sub Surface Contracting, Inc. and A.A.C. Construction, LLC for the remainder of four (4) Fiscal Years, FY 2021-22 until FY2024-25. Initial funding of $3,500,000 inclusive NMGRT is requested for FY2021-22. Funding is broken down for each contractor as follows: $2,250,000.00 inclusive of NMGRT for Sub Surface and $1,250,000.00 inclusive of NMGRT for AAC. .Future funding will depend upon the availability of CIP funds.

BACKGROUND AND SUMMARY:

The Priority Line Replacement Price Agreement is an on-call requirements contract, with the Water Division issuing work orders as needed for work such as water line replacements. The contract is funded from CIP for Transmission and Distribution to work on their infrastructure. The initial Contract amount is limited to $3,500,000.00 inclusive of New Mexico Gross Receipt Tax (NMGRT).

This is was multi-contractor award ITB to set the applicable Bid Items for future work. The ITB was only used to select the winning Contractors. Future work will be assigned under fully signed Work Orders for planned work on will be followed with a signed Work Order for Emergency repair. The exact type of work required will be used to select from the applicable Bid Items. Not every Bit Item is anticipated to be used.

The initial contract period is Fiscal Years 2021-2025. The bids for this project were opened on June 17, 2021 and were subsequently evaluated for completeness and accuracy. The low bid in the amount of $892,448.25 plus NMGRT was submitted by Sub Surface Contracting, Inc. A second acceptable bid of $933,364.22 was submitted by A.A.C. Construction, LLC. The Water Division is planning on replacing pipe on multiple streets in the Apache, San Ildefonso, San Felipe, MaClovia, Isabel and Rosina neighborhood, as well as Bishops Lodge between Artist and Murales Roads, Lorenzo Road, Malaga

Lane, Pino Road, San Isabel Street, Sosaya Street, Camino Santander and Camino Santiago/Camino Matias.

A summary of the bids is provided below:

Bidders	Total Bid without NMGRT	Bid Including Veterans preference without NMGRT
Sub Surface Contracting, Inc.	$892,448.25	$821,052.39
A.A.C. Construction, LLC	$933,364.22	
TLC Plumbing & Utility	$1,158,308.40	
Blueline Construction, Inc.	$1,476,101.57	
Allied 360 Construction, LLC	$2,364,321.74	

CONTRACT NUMBER:
The FY22 Munis contract number:
Sub Surface Contracting # 3202929
A.A.C Construction # 3202927

FUNDING SOURCE:
The funding source is:
Water Enterprise Fund/ CIP
FY 2022
Fund Name/Number: Water Enterprise Fund/ 500
Munis Org Name/Number: Water CIP / 5050395
Munis Object Name/Number: WIP Construction / 572970

Funds for this work will be available in Business Unit, Line Item 5050395.572970 in the amount of $1,600,000.00 plus NMGRT upon approval of the BAR Budget Increase.

RECOMMENDATION:

The Water Division recommends:

- Review and approval of award of contracts to Sub Surface Contracting, Inc. and A.A.C Construction, LLC for the FY 21/22 Priority Line Replacement Price Agreement, CIP # 3058 under ITB No. '21/43/B for a total amount of $3,500,000.00 inclusive of NMGRT for FY2021-22.

- Approval of the BAR – Budget Increase in the amount of $3,500,000 from the Water Enterprise Fund cash balance into the Water CIP fund for FY 2022.

- Forwarding and recommendation of approval of award and contract to the Finance Committee for their consideration and approval to the Governing Body for their final consideration and approval.

Log # {Finance use only}:	
Batch # {Finance use only}:	

City of Santa Fe, New Mexico
BUDGET AMENDMENT RESOLUTION (BAR)

DEPARTMENT / DIVISION NAME	DATE
PUD/Water/CIP	8/17/2021

ITEM DESCRIPTION	ORG	OBJECT	PROJECT	INCREASE	DECREASE
EXPENDITURES				{enter as positive #}	{enter as negative #}
Water CIP WIP Construction	5050395	572970	WTR1950535	3,500,000	
REVENUES				{enter as negative #}	{enter as positive #}
				$ 3,500,000	$ -

JUSTIFICATION: *(use additional page if needed)*
--Attach supporting documentation/memo

Budget Increase from Cash Balance in Water Enterprise Fund for Priority Line Replacement

Price Agreements Award of Bid 21/43/B to A.A.C Construction and Sub Surface for

FY 2022 CIP3058

{Complete section below if BAR results in a net change to ANY Fund}

Fund(s) Affected	Fund Balance Increase/(Decrease)
505	(3,500,000)
TOTAL:	**(3,500,000)**

Maya Martinez 8/17/2021
Prepared By {print name} Date

{Use this form for Finance Committee/ City Council agenda items ONLY}

Andy Hopkins 8/20/21
Andy Hopkins (Aug 20, 2021 11:52 MDT)
Budget Officer Date

CITY COUNCIL APPROVAL

City Council Approval Date

Agenda Item #:

Division Director Signature {optional} Date

Shannon Jones 3/19/2021
Department Director Signature Date

Finance Director {≤ $5,000} Date

City Manager {≤ $60,000} Date

Item#**21-0484**
Munis Contract# 3202929

CITY OF SANTA FE

PRIORITY LINE REPLACEMENTPRICE
AGREEMENT

CIP # 3058

THIS AGREEMENT is made and entered into by and between the City of Santa Fe, New Mexico, hereinafter referred to as the "City," and **SUB SURFACE CONTRACTING, INC.**, hereinafter referred to as the Contractor, and is effective as of the date set forth below upon which it is executed by the Parties.

IT IS AGREED BETWEEN THE PARTIES:

1. Scope of Work.

A. The Contractor shall perform the following work and as described is Exhibit "A" attached hereto:

1) The Contractor shall perform all the work required by Water Division as required in the Contract Documents for Priority Line Replacement Contract. The work consists of, but is not limited to furnishing all equipment, labor and materials for the construction and repair of water mains, valves, hydrants, metered water service lines and settings, pressure reducing valves, vaults, and other incidental work such as pavement removal and replacement, traffic control all as required to extend, replace or repair water distribution, water storage, and water supply infrastructure, in accordance with the drawings, specifications, and other Contract Documents. All water piping shall be new, poly-wrapped ductile iron, unless otherwise specified.

2) The Contractor shall be responsible for verifications of all measurements and dimensions for bidding on each subsequent Work Order.

3) The Contractor shall provide and keep at the work site a complete "as built" record set of drawings that shall be corrected daily and shall show every change from the original approved drawings and specifications. These changes shall be forwarded to City periodically. The drawings shall reflect exact and actual "as-built" conditions of construction, installation, and erection as it progresses. Where drawings are not adequate to show "as built" conditions. Contractor shall prepare sketches which delineate the necessary "asbuilt" information. City shall furnish two (2) sets of all paper "blue-line" print "approved" drawings for use in accomplishing specified mark up. Final "as built" drawings shall be delivered to City by Contractor upon completion of the work.

4) The Contractor shall be responsible for maintaining traffic control at the site in conformance with the Manual on Uniform Traffic Control Devices.

5) The Contractor shall be responsible for all permits, fees, and State and City inspections associated with the construction.

6) Incorporation by Reference. All exhibits, addenda, schedules of ITB 21/XX/B attached hereto and all certificates, work order documents, drawings, as-built and other instruments contemplated to be delivered hereunder are hereby expressly made a part of this Agreement as fully as though set forth herein, and all references to this Agreement herein orin any of such writings shall be deemed to refer to and include all of such writings. This Agreement contains the entire agreement between the parties with respect to the subject matter hereof and supersedes all prior agreements and understandings, both written and oral, among theparties with respect to the subject matter hereof. If there is any conflict between such exhibits or addenda and the terms of this Agreement, such exhibits or addenda shall control.

2. Compensation.

A. The City shall pay to the Contractor in full payment for services satisfactorily performed at total amount up to two million seventy four thousand nine hundred twenty seven and ninety five cents ($2,074,927.95). The New Mexico gross receipts tax levied on the amounts payable under this Agreement totaling one hundred seventy five thousand seventy two dollars and five cents ($175,072.05) shall be paid by the City to the Contractor as described in Exhibit A attached hereto. **The total amount payable to the Contractor under this Agreement, including gross receipts tax and expenses, shall not two million two million two hundred and fifty thousand dollars ($2,250,000). This amount is a maximum and not a guarantee that the work assigned to be performed by Contractor under this Agreement shall equal the amount stated herein. The parties do not intend for the Contractor to continue to provide services without compensation when the total compensation amount is reached. Contractor is responsible for notifying the City when the services provided under this Agreement reach the total compensation amount. In no event will the Contractor be paid for services provided in excess of the total compensation amount without this Agreement being amended in writing prior to those services in excess of the total compensation amount being provided.**

B. Payment is subject to availability of funds pursuant to the Appropriations Paragraph set forth below and to any negotiations between the parties from year to year pursuant to Paragraph 1, Scope of Work, and to approval by the City. All invoices MUST BE received by the City no later than thirty 30) days after the termination of the Fiscal Year in which the services were delivered. Invoices received after such date WILL NOT BE PAID.

C. Contractor must submit a detailed statement accounting for all services performed and expenses incurred. If the City finds that the services are not acceptable, within thirty days after the date of receipt of written notice from the Contractor that payment is requested, it shall provide the Contractor a letter of exception explaining the defect or objection to the services, and outlining steps the Contractor may take to provide remedial action. Upon certification by the City that the services have been received and accepted, payment shall be tendered to the Contractor within thirty days after the date of acceptance. If payment is made by mail, the payment shall be deemed tendered on the date it is postmarked. However, the City shall not incur late charges, interest, or penalties for failure to make payment within the time specified herein.

3. Term.

THIS AGREEMENT SHALL NOT BECOME EFFECTIVE UNTIL APPROVED BY THE CITY. This Agreement shall terminate on **June 30, 2025** unless terminated pursuant to paragraph 4 (Termination), or paragraph 5 (Appropriations). In accordance with Section 13-1-150 NMSA 1978, no contract term for a professional services contract, including extensions and renewals, shall exceed four years, except as set forth in Section 13-1-150 NMSA 1978.

4. Termination.

A. Termination. This Agreement may be terminated by either of the parties hereto upon written notice delivered to the other party at least thirty (30) days prior to the intended date of

termination. Except as otherwise allowed or provided under this Agreement, the City sole liability upon such termination shall be to pay for acceptable work performed prior to the Contractor's receipt of the notice of termination, if the City is the terminating party, or the Contractors receipt of the notice of termination, if the Contractor is the terminating party; provided, however, that a notice of termination shall not nullify or otherwise affect either party'sliability for pre-termination defaults under or breaches of this Agreement. The Contractor shall submit an invoice for such work within thirty (30) days of receiving or sending the notice of termination. Notwithstanding the foregoing, this Agreement may be terminated immediately upon written notice to the Contractor if the Contractor becomes unable to perform the services contracted for, as determined by the City or if, during the term of this Agreement, the Contractor or any of its officers, employees or agents is indicted for fraud, embezzlement or other crime dueto misuse of City funds or due to the Appropriations paragraph herein. *THIS PROVISION JS NOT EXCLUSIVE AND DOES NOT WAIVE THE OTHER LEGAL RIGHTS AND REMEDIES CAUSED BY THE CONTRACTOR'S DEFAULT/BREACH OF THIS AGREEMENT.*

B. Termination Management. Immediately upon receipt by either the City or the Contractor of notice of termination of this Agreement, the Contractor shall: 1) not incur any further obligations for salaries, services or any other expenditure of funds under this Agreement withoutwritten approval of the City; 2) comply with all directives issued by the City in the notice oftermination as to the performance of work under this Agreement; and 3) take such action as the City shall direct for the protection, preservation, retention or transfer of all property titled to theCity and records generated under this Agreement. Any non-expendable personal property orequipment provided to or purchased by the Contractor with contract funds shall become property of the City upon termination and shall be submitted to the City as soon as practicable.

5. Appropriations.

The terms of this Agreement are contingent upon sufficient appropriations and authorization being made by the City Council for the performance of this Agreement. If sufficient appropriations and authorization are not made by the City Council, this Agreement shall terminate immediately upon written notice being given by the City to the Contractor. The City's decision asto whether sufficient appropriations are available shall be accepted by the Contractor and shall be final. If the City proposes an amendment to the Agreement to unilaterally reduce funding, the Contractor shall have the option to terminate the Agreement or to agree to the reduced funding, within thirty (30) days of receipt of the proposed amendment.

6. Status of Contractor.

The Contractor and its agents and employees are independent contractors performing professional services for the City and are not employees of the City. The Contractor and its agents and employees shall not accrue leave, retirement, insurance, bonding, use of City vehicles, or anyother benefits afforded to employees of the City as a result of this Agreement. The Contractor acknowledges that all sums received hereunder are reportable by the Contractor for tax purposes, including without limitation, self-employment and business income tax. The Contractor agrees not to purport to bind the City unless the Contractor has express written authority to do so, and then only within the strict limits of that authority.

7. Construction Contract Performance and Payment Bond.

A. When a construction contract is awarded in excess of twenty-five thousand dollars ($25,000), the following bonds or security shall be delivered to the City and shall become binding on the parties upon the execution of the contract. If the Contractor fails to deliver the required performance and payment bonds, the Contractor's bid shall be rejected, its bid security shall be enforced to the extent of actual damages. Award of the contract shall be made pursuant to the

Procurement Code in the following manner:

(1) a performance bond satisfactory to the City, executed by a surety company authorized to do business in this state and said surety to be approved in federal circular 570 as published by the United States treasury department or the state board of finance or the local governing authority, in an amount equal to one hundred percent of the price specifiedin the contract; and

(2) a payment bond satisfactory to the City, executed by a surety company authorized to do business in this state and said surety to be approved in federal circular 570 as published by the United States treasury department or the state board of finance or the local governing authority, in an amount equal to one hundred percent of the price specifiedin the contract, for the protection of all persons supplying labor and material to the contractor or its subcontractors for the performance of the work provided for in the contract.

B. A subcontractor shall provide a performance and payment bond on a public works Building project if the subcontractor's contract for work to be performed on a project is one hundred twenty-five thousand dollars ($125,000) or more.

8. Assignment.

The Contractor shall not assign or transfer any interest in this Agreement or assign any claims for money due or to become due under this Agreement without the prior written approval of the City.

9. Subcontracting.

The Contractor shall not subcontract any portion of the services to be performed under this Agreement without the prior written approval of the City. No such subcontract shall relieve the primary Contractor from its obligations and liabilities under this Agreement, nor shall any subcontract obligate direct payment from the City.

10. Release.

Final payment of the amounts due under this Agreement shall operate as a release of the City, its officers and employees from all liabilities, claims and obligations whatsoever arising from or under this Agreement.

11. Confidentiality.

Any confidential information provided to or developed by the Contractor in the performance of this Agreement shall be kept confidential and shall not be made available to any individual or organization by the Contractor without the prior written approval of the City.

12. Product of Service -- Copyright.

All materials developed or acquired by the Contractor under this Agreement shall becomethe property of the City and shall be delivered to the City no later than the termination date of this Agreement. Nothing developed or produced, in whole or in part, by the Contractor under this Agreement shall be the subject of an application for copyright or other claim of ownership by or on behalf of the Contractor.

13. Conflict of Interest; Governmental Conduct Act.

A. The Contractor represents and warrants that it presently has no interest and, duringthe term of this Agreement, shall not acquire any interest, direct or indirect, which would conflictin any manner or degree with the performance or services required under the Agreement.

B. The Contractor further represents and warrants that it has complied with, and, during the term of this Agreement, will continue to comply with, and that this Agreement complies with all applicable provisions of the Governmental Conduct Act, Chapter 10, Article 16 NMSA 1978.

C. Contractor's representations and warranties in Paragraphs A and B of this Article 13 are material representations of fact upon which the City relied when this Agreement was enteredinto by the parties. Contractor shall provide immediate written notice to the City if, at any timeduring the term of this Agreement, Contractor learns that Contractor's representations and warranties in Paragraphs A and B of this Article 13 were erroneous on the effective date of this Agreement or have become erroneous by reason of new or changed circumstances. If it is laterdetermined that Contractor's representations and warranties in Paragraphs A and B of this Article 13 were erroneous on the effective date of this Agreement or have become erroneous by reason ofnew or changed circumstances, in addition to other remedies available to the City and notwithstanding anything in the Agreement to the contrary, the City may immediately terminate the Agreement.

D. All terms defined in the Governmental Conduct Act have the same meaning in thissection.

14. Amendment.

A. This Agreement shall not be altered, changed or amended except by instrument in writing executed by the parties hereto and all other required signatories.

B. If the City proposes an amendment to the Agreement to unilaterally reduce funding due to budget or other considerations, the Contractor shall, within thirty (30) days of receipt of the proposed Amendment, have the option to terminate the Agreement, pursuant to the termination provisions as set forth in Article 4 herein, or to agree to the reduced funding.

15. Change Orders.

A. Changes. The Contractor may only make changes or revisions within the Scope of Work as defined by Article 1 and/or Exhibit 1 after receipt of written approval by the City Manager or his/her designee. Such change may only be made to Tasks or Sub-Task as defined in the Scope of Work. Under no circumstance shall such change affect the:

1) Deliverable requirements, as outlined in the Scope of Work;
2) Due date of any Deliverable, as outlined in the Scope of Work;
3) Compensation of any Deliverable, as outlined in the Scope of Work;
4) Agreement compensation, as outlined in Article 2; or
5) Agreement termination, as outlined in Article 4.

B. Change Request Process. In the event that circumstances warrant a change to accomplish the Scope of Work as described above, a Change Request shall be submitted that meets the following criteria:

1) The Project Manager shall draft a written Change Request for review and approval by the City Manager to include:
   (a) the name of the person requesting the change;
   (b) a summary of the required change;
   (c) the start date for the change;
   (d) the reason and necessity for change;
   (e) the elements to be altered; and

(f) The impact of the change.

2) The City Manager shall provide a written decision on the Change Request to the Contractor within a maximum of ten (10) Business Days of receipt of the Change Request. All decisions made by the City Manager are final. Change Requests, once approved, become a part of the Agreement and become binding as a part of the original Agreement.

16. Merger.

This Agreement incorporates all the Agreements, covenants and understandings between the parties hereto concerning the subject matter hereof, and all such covenants, Agreements and understandings have been merged into this written Agreement. No prior Agreement or understanding, oral or otherwise, of the parties or their agents shall be valid or enforceable unless embodied in this Agreement.

17. Penalties for violation of law.

The Procurement Code, Sections 13-1-28 through 13-1-199, NMSA 1978, imposes civil and criminal penalties for its violation. In addition, the New Mexico criminal statutes imposefelony penalties for illegal bribes, gratuities and kickbacks.

18. Equal Opportunity Compliance.

The Contractor agrees to abide by all federal and state laws and rules and regulations, andSanta Fe City Code, pertaining to equal employment opportunity. In accordance with all such laws of the State of New Mexico, the Contractor assures that no person in the United States shall, on the grounds of race, religion, color, national origin, ancestry, sex, age, physical or mental handicap, or serious medical condition, spousal affiliation, sexual orientation or gender identity, be excluded from employment with or participation in, be denied the benefits of, or be otherwise subjected to discrimination under any program or activity performed under this Agreement. If Contractor is found not to be in compliance with these requirements during the life of this Agreement, Contractor agrees to take appropriate steps to correct these deficiencies.

19. Applicable Law.

The laws of the State of New Mexico shall govern this Agreement, without giving effect to its choice of law provisions. Venue shall be proper only in a New Mexico court of competent jurisdiction in accordance with Section 38-3-1 (G) NMSA 1978. By execution of this Agreement, Contractor acknowledges and agrees to the jurisdiction of the courts of the State of New Mexicoover any and all lawsuits arising under or out of any term of this Agreement.

20. Workers Compensation.

The Contractor agrees to comply with state laws and rules applicable to workers compensation benefits for its employees. If the Contractor fails to comply with the Workers Compensation Act and applicable rules when required to do so, this Agreement may be terminated by the City.

21. Professional Liability Insurance. Contractor shall maintain professional liability insurance throughout the term of this Agreement providing a minimum coverage in the amount required under the New Mexico Tort Claims Act. The Contractor shall furnish the City with proofof insurance of Contractor's compliance with the provisions of this section as a condition prior toperforming services under this Agreement.

22. Other Insurance

If the Services contemplated under this Agreement will be performed on or in City facilitiesor property, Contractor shall maintain in force during the entire term of this Agreement, the following insurance coverage(s), naming the City as additional insured,

A. Commercial General Liability insurance shall be written on an occurrence basis and be a broad as ISO Form CG 00 01 with limits not less than $2,000,000 per occurrence and #2,000,000 in the aggregate for claims against bodily injury, personal and advertising injury, and property damage. Said policy shall include broad from Contractual Liability coverage and be endorsed to name the City of Santa Fe, their officials, officers, employees and agents as additionalinsureds.

B. Business Automobile Liability insurance for all owned, non-owned automobiles,with a combined single limit not less than $1,000,000 per accident.

C. Broader Coverage and Limits. The insurance requirements under this Agreement shall be the greater of (1) the minimum coverage and limits specified in this Agreement, or (2) the broader coverage and maximum limits of coverage of any insurance policy or proceeds available tothe Named Insured. It is agreed that these insurance requirements shall not in any way act to reduce coverage that is broader or that includes higher limits than the minimums required herein. No representation is made that minimum insurance requirements of this Agreement are sufficient to cover the obligations of Contractor hereunder.

D. Contractor shall maintain the above insurance for the term of this Agreement and name the City as an additional insured and provide for 30 days cancellation notice on any Certificate of Insurance form furnished by Contractor. Such certificate shall also specifically state the coverage provided under the policy is primary over any other valid and collectible insurance and provide a waiver of subrogation.

23. Records and Financial Audit.

The Contractor shall maintain detailed time and expenditure records that indicate the date; time, nature and cost of services rendered during the Agreement's term and effect and retain them for a period of three (3) years from the date of final payment under this Agreement. The records shall be subject to inspection by the City. The City shall have the right to audit bi11ings both before and after payment. Payment under this Agreement shall not foreclose the right of the City to recover excessive or illegal payments.

24. Indemnification.

The Contractor shall defend, indemnify and hold harmless the City from all actions, proceeding, claims, demands, costs, damages, attorney's fees and all other liabilities and expenses of any kind from any source which may arise out of the performance of this Agreement, caused by the negligent act or failure to act of the Contractor, its officers, employees, servants, subcontractors or agents, or if caused by the actions of any client of the Contractor resulting in injury or damageto persons or property during the time when the Contractor or any officer, agent, employee, servantor subcontractor thereof has or is performing services pursuant to this Agreement. In the event that any action, suit or proceeding related to the services performed by the Contractor or any officer, agent, employee, servant or subcontractor under this Agreement is brought against the Contractor,the Contractor shall, as soon as practicable but no later than two (2) days after it receives notice thereof, notify the legal counsel of the City.

25. New Mexico Tort Claims Act

Any liability incurred by the City of Santa Fe in connection with this Agreement is subjectto the immunities and limitations of the New Mexico Tort Claims Act, Section 41-4-1, et. seq.NMSA 1978, as

amended. The city and its "public employees" as defined in the New Mexico Tort Claims Act, do not waive sovereign immunity, do not waive any defense and do not waive anylimitation of liability pursuant to law. No provision in this Agreement modifies or waives any provision of the New Mexico Tort Claims Act.

26. Invalid Term or Condition.

If any term or condition of this Agreement shall be held invalid or unenforceable, the remainder of this Agreement shall not be affected and shall be valid and enforceable.

27. Enforcement of Agreement.

A party's failure to require strict performance of any provision of this Agreement shall notwaive or diminish that party's right thereafter to demand strict compliance with that or any other provision. No waiver by a party of any of its rights under this Agreement shall be effective unlessexpress and in writing, and no effective waiver by a party of any of its rights shall be effective to waive any other rights.

28. Notices.

Any notice required to be given to either party by this Agreement shall be in writing andshall be delivered in person, by courier service or by U.S. mail, either first class or certified, return receipt requested, postage prepaid, as follows:

To the City:
Water Division Director
801 W. San Mateo
Santa Fe, NM 87505

To the Contractor:
Sub Surface Contracting Inc.
27 A Paseo de River
Santa Fe, NM 87507

29. Authority.

If Contractor is other than a natural person, the individual(s) signing this Agreement on behalf of Contractor represents and warrants that he or she has the power and authority to bindContractor, and that no further action, resolution, or approval from Contractor is necessary to enterinto a binding contract.

IN WITNESS WHEREOF, the Parties have executed this Agreement as of the date of the signatureby the required approval authorities below.

CITY OF SANTA FE:

ALAN WEBBER, MAYOR

DATE: Sep 10, 2021

CONTRACTOR:

Neal Keiper
Neal Keiper (Aug 19, 2021 13:26 MDT)
NAME

President
TITLE

DATE: Aug 19, 2021

CRS# 02104256000
Registration # 46991

ATTEST:

Kristine Mihelcic
Kristine Mihelcic (Sep 15, 2021 12:12 MDT)

KRISTINE BUSTOS MIHELCIC, CITY CLERK
GB MTG 09/08/2021

CITY ATTORNEY'S OFFICE:

Marcos Martinez
Marcos Martinez (Aug 19, 2021 10:05 MDT)

SENIOR ASSISTANT CITY ATTORNEY

APPROVED FOR FINANCES:

Mary McCoy

MARY MCCOY, FINANCE DIRECTOR

5050395.572970
Org. Name/Org#

AJH
AJH

				AAC		Sub Surface	
Bid Item	Approx. QTY.	Unit	Article and Description	Unit Price	Item Price	Unit Price	Item Price
5	35	LF	2" PVC Water Main, cip, all lengths	$ 32.50	$ 1,137.50	$ 30.00	$ 1,050.00
10	35	LF	4" PVC Water Main, cip, <100'	$ 38.00	$ 1,330.00	$ 36.00	$ 1,260.00
15	100	LF	4" PVC Water Main, cip, >100'	$ 36.00	$ 3,600.00	$ 34.00	$ 3,400.00
20	50	LF	6" PVC Water Main, cip, <100'	$ 43.50	$ 2,175.00	$ 42.00	$ 2,100.00
25	150	LF	6" PVC Water Main, cip, >100'	$ 40.50	$ 6,075.00	$ 39.00	$ 5,850.00
30	75	LF	8" PVC Water Main, cip, <100'	$ 49.00	$ 3,675.00	$ 48.00	$ 3,600.00
35	200	LF	8" PVC Water Main, cip, >100'	$ 46.75	$ 9,350.00	$ 45.50	$ 9,100.00
40	35	LF	10" PVC Water Main, cip, <100'	$ 56.00	$ 1,960.00	$ 52.00	$ 1,820.00
45	100	LF	10" PVC Water Main, cip, >100'	$ 52.00	$ 5,200.00	$ 49.00	$ 4,900.00
50	50	LF	12" PVC Water Main, cip, <100'	$ 69.37	$ 3,468.50	$ 66.75	$ 3,337.50
55	150	LF	12" PVC Water Main, cip, >100'	$ 66.25	$ 9,937.50	$ 64.50	$ 9,675.00
60	50	LF	14" PVC Water Main, cip	$ 87.00	$ 4,350.00	$ 79.00	$ 3,950.00
65	50	LF	16" PVC Water Main, cip	$ 103.50	$ 5,175.00	$ 97.00	$ 4,850.00
70	50	LF	24" PVC Water Main, cip	$ 167.50	$ 8,375.00	$ 100.00	$ 5,000.00
75	35	LF	2" DI Water Main, cip, all lengths	$ 42.00	$ 1,470.00	$ -	$ -
80	50	LF	4" DI Water Main, cip, <100'	$ 63.75	$ 3,187.50	$ 57.50	$ 2,875.00
85	100	LF	4" DI Water Main, cip, >100'	$ 56.50	$ 5,650.00	$ 56.00	$ 5,600.00
90	75	LF	6" DI Water Main, cip, <100'	$ 63.50	$ 4,762.50	$ 53.00	$ 3,975.00
95	250	LF	6" DI Water Main, cip, >100'	$ 56.50	$ 14,125.00	$ 51.00	$ 12,750.00
100	75	LF	8" DI Water Main, cip, <100'	$ 68.00	$ 5,100.00	$ 60.25	$ 4,518.75
105	250	LF	8" DI Water Main, cip, >100'	$ 73.00	$ 18,250.00	$ 58.00	$ 14,500.00
110	35	LF	10" DI Water Main, cip, <100'	$ 77.00	$ 2,695.00	$ 65.00	$ 2,275.00
115	100	LF	10" DI Water Main, cip, >100'	$ 74.00	$ 7,400.00	$ 63.00	$ 6,300.00
120	50	LF	12" DI Water Main, cip, <100'	$ 99.00	$ 4,950.00	$ 78.00	$ 3,900.00
125	100	LF	12" DI Water Main, cip, >100'	$ 89.50	$ 8,950.00	$ 74.00	$ 7,400.00
130	50	LF	14" DI Water Main, cip	$ 115.50	$ 5,775.00	$ 87.00	$ 4,350.00
135	50	LF	16" DI Water Main, cip	$ 139.50	$ 6,975.00	$ 101.00	$ 5,050.00
140	50	LF	24" DI Water Main, cip	$ 207.00	$ 10,350.00	$ 159.00	$ 7,950.00
145	75	LF	Extra Pay for Trench Depth, 6'-8'	$ 41.00	$ 3,075.00	$ 8.00	$ 600.00
150	50	LF	Extra Pay for Trench Depth, 8'-10'	$ 98.00	$ 4,900.00	$ 12.00	$ 600.00
155	25	LF	Extra Pay for Trench Depth, 10'-14'	$ 154.00	$ 3,850.00	$ 30.00	$ 750.00
160	20	CY	Rock Excavation	$ 325.00	$ 6,500.00	$ 220.00	$ 4,400.00
165	300	CY	Exploratory Excavation (as SDCW Approved)	$ 50.00	$ 15,000.00	$ 65.00	$ 19,500.00
170	75	CY	Imported Backfill (as SDCW Approved)	$ 36.00	$ 2,700.00	$ 24.00	$ 1,800.00
175	1,000	LB	Fitting Installation	$ 4.50	$ 4,500.00	$ 4.00	$ 4,000.00
180	500	LB	Fitting Insertion	$ 26.00	$ 13,000.00	$ 34.00	$ 17,000.00
185	25	EA	4" Retainer Ring/ Bolt on Flange	$ 60.00	$ 1,500.00	$ 65.00	$ 1,625.00
190	50	EA	6" Retainer Ring/ Bolt on Flange	$ 86.50	$ 4,325.00	$ 105.00	$ 5,250.00
195	50	EA	8" Retainer Ring/ Bolt on Flange	$ 98.50	$ 4,925.00	$ 119.00	$ 5,950.00
200	20	EA	10" Retainer Ring/ Bolt on Flange	$ 123.00	$ 2,460.00	$ 121.00	$ 2,420.00
205	20	EA	12" Retainer Ring/ Bolt on Flange	$ 147.50	$ 2,950.00	$ 145.00	$ 2,900.00
210	20	EA	14" Retainer Ring/ Bolt on Flange	$ 184.50	$ 3,690.00	$ 179.00	$ 3,580.00
215	10	EA	16" Retainer Ring/ Bolt on Flange	$ 275.00	$ 2,750.00	$ 250.00	$ 2,500.00
220	25	EA	4"Joint Harness	$ 70.50	$ 1,762.50	$ 40.00	$ 1,000.00
225	50	EA	6" Joint Harness	$ 95.00	$ 4,750.00	$ 110.00	$ 5,500.00
230	50	EA	8" Joint Harness	$ 125.00	$ 6,250.00	$ 120.00	$ 6,000.00
235	20	EA	10" Joint Harness	$ 160.00	$ 3,200.00	$ 160.00	$ 3,200.00
240	20	EA	12" Joint Harness	$ 192.50	$ 3,850.00	$ 180.00	$ 3,600.00
245	20	EA	14" Joint Harness	$ 370.00	$ 7,400.00	$ 375.00	$ 7,500.00
250	10	EA	16" Joint Harness	$ 427.50	$ 4,275.00	$ 410.00	$ 4,100.00
255	10	CY	Concrete Thrust Blocking (as SDCW Approved)	$ 315.00	$ 3,150.00	$ 250.00	$ 2,500.00
260	2	EA	Tapping Sleeve w/ Tap, 4" X 4"	$ 1,350.00	$ 2,700.00	$ 1,350.00	$ 2,700.00
265	4	EA	Tapping Sleeve w/ Tap, 6" X 4" - 6"	$ 1,567.50	$ 6,270.00	$ 1,500.00	$ 6,000.00
270	4	EA	Tapping Sleeve w/ Tap, 8" X 4" - 8"	$ 1,900.00	$ 7,600.00	$ 1,800.00	$ 7,200.00

				AAC		Sub Surface	
Bid Item	Approx. QTY.	Unit	Article and Description	Unit Price	Item Price	Unit Price	Item Price
275	2	EA	Tapping Sleeve w/ Tap, 10" X 4" - 10"	$ 2,250.00	$ 4,500.00	$ 2,100.00	$ 4,200.00
280	4	EA	Tapping Sleeve w/ Tap, 12" X 4" - 12"	$ 2,650.00	$ 10,600.00	$ 2,300.00	$ 9,200.00
285	1	EA	Tapping Sleeve w/Tap, 20" X 4" - 20"	$ 4,747.50	$ 4,747.50	$ 4,200.00	$ 4,200.00
290	1	EA	Non-Pressurized Connections, 2" line	$ 1,650.00	$ 1,650.00	$ 1,500.00	$ 1,500.00
295	1	EA	Non-Pressurized Connections, 4"-10" line	$ 3,587.50	$ 3,587.50	$ 3,100.00	$ 3,100.00
300	1	EA	Non-Pressurized Connections, 12"-20" line	$ 6,050.00	$ 6,050.00	$ 4,100.00	$ 4,100.00
305	2	EA	2" CL125 Gate Valves, cip.	$ 807.50	$ 1,615.00	$ 850.00	$ 1,700.00
310	2	EA	4" CL125 Gate Valves, cip.	$ 925.00	$ 1,850.00	$ 1,200.00	$ 2,400.00
315	5	EA	6" CL125 Gate Valves, cip.	$ 1,200.00	$ 6,000.00	$ 1,525.00	$ 7,625.00
320	5	EA	8" CL125 Gate Valves, cip.	$ 1,650.00	$ 8,250.00	$ 1,725.00	$ 8,625.00
325	1	EA	10" CL125 Gate Valves, cip.	$ 2,315.00	$ 2,315.00	$ 2,325.00	$ 2,325.00
330	2	EA	12" CL125 Gate Valves, cip.	$ 2,900.00	$ 5,800.00	$ 2,800.00	$ 5,600.00
335	1	EA	2" CL250 Gate Valves, cip.	$ 792.50	$ 792.50	$ 700.00	$ 700.00
340	1	EA	4" CL250 Gate Valves, cip.	$ 1,837.50	$ 1,837.50	$ 1,800.00	$ 1,800.00
345	10	EA	6" CL250 Gate Valves, cip.	$ 1,950.00	$ 19,500.00	$ 1,825.00	$ 18,250.00
350	3	EA	8" CL250 Gate Valves, cip.	$ 2,475.00	$ 7,425.00	$ 2,000.00	$ 6,000.00
355	1	EA	10" CL250 Gate Valves, cip.	$ 4,000.00	$ 4,000.00	$ 3,700.00	$ 3,700.00
360	1	EA	12" CL250 Gate Valves, cip.	$ 4,552.50	$ 4,552.50	$ 4,200.00	$ 4,200.00
365	1	EA	16" CL250 Gate Valves, cip.	$ 7,025.00	$ 7,025.00	$ 6,500.00	$ 6,500.00
370	1	EA	20" CL250 Gate Valves, cip.	$ 16,755.00	$ 16,755.00	$ 16,190.00	$ 16,190.00
375	1	EA	24" CL250 Gate Valves, cip.	$ 23,750.00	$ 23,750.00	$ 23,250.00	$ 23,250.00
380	1	EA	12" CL250 Butterfly Valves, cip.	$ 2,800.00	$ 2,800.00	$ 2,800.00	$ 2,800.00
385	1	EA	16" CL250 Butterfly Valves, cip.	$ 4,975.00	$ 4,975.00	$ 4,850.00	$ 4,850.00
390	1	EA	20" CL250 Butterfly Valves, cip.	$ 7,680.00	$ 7,680.00	$ 6,600.00	$ 6,600.00
395	1	EA	24" CL250 Butterfly Valves, cip.	$ 10,042.50	$ 10,042.50	$ 9,125.00	$ 9,125.00
400	5	EA	Fire Hydrant, 5' or less bury, cip.	$ 2,987.50	$ 14,937.50	$ 3,200.00	$ 16,000.00
405	2	EA	Fire Hydrant Extension, 6" or 12" length	$ 767.50	$ 1,535.00	$ 700.00	$ 1,400.00
410	1	EA	Fire Hydrant Extension, 18" or 24" length	$ 1,017.50	$ 1,017.50	$ 920.00	$ 920.00
415	1	EA	Fire Hydrant Remove & Relay	$ 1,350.00	$ 1,350.00	$ 700.00	$ 700.00
420	1	EA	Fire Hydrant Remove & Return	$ 887.50	$ 887.50	$ 575.00	$ 575.00
425	1	EA	2 1/4" Flush Hydrant	$ 1,657.50	$ 1,657.50	$ 1,500.00	$ 1,500.00
430	1	EA	2" Blow-Off Valve Installation	$ 1,420.00	$ 1,420.00	$ 1,300.00	$ 1,300.00
435	1	EA	2" Pressure Relief Valve, cip.	$ 6,780.00	$ 6,780.00	$ 6,725.00	$ 6,725.00
440	1	EA	3" Pressure Relief Valve, cip.	$ 7,065.50	$ 7,065.50	$ 6,950.00	$ 6,950.00
445	1	EA	4" Pressure Relief Valve, cip.	$ 8,432.50	$ 8,432.50	$ 8,195.00	$ 8,195.00
450	1	EA	6" Pressure Relief Valve, cip.	$ 11,091.50	$ 11,091.50	$ 10,800.00	$ 10,800.00
455	1	EA	8" Pressure Relief Valve, cip.	$ 15,362.50	$ 15,362.50	$ 14,925.00	$ 14,925.00
460	1	EA	12" Pressure Relief Valve, cip.	$ 29,837.50	$ 29,837.50	$ 29,500.00	$ 29,500.00
465	1	EA	Air & Vacuum Release Valve, 1"	$ 2,970.00	$ 2,970.00	$ 2,750.00	$ 2,750.00
470	1	EA	Air & Vacuum Release Valve, 2"	$ 4,245.00	$ 4,245.00	$ 3,940.00	$ 3,940.00
475	1	EA	Install City of Santa Fe Furnished Valve/Meter, 2" - 4"	$ 825.00	$ 825.00	$ 450.00	$ 450.00
480	1	EA	Install City of Santa Fe Furnished Valve/Meter, 6" - 8"	$ 1,025.00	$ 1,025.00	$ 550.00	$ 550.00
485	1	EA	Install City of Santa Fe Furnished Valve/Meter, 10"-12"	$ 1,275.00	$ 1,275.00	$ 750.00	$ 750.00
490	1	EA	Metered 2" Bypass – Vault Installation	$ 4,000.00	$ 4,000.00	$ 3,185.00	$ 3,185.00
495	20	EA	Valve Box, cip.	$ 575.00	$ 11,500.00	$ 625.00	$ 12,500.00
500	5	EA	Valve Box Replacement	$ 750.00	$ 3,750.00	$ 775.00	$ 3,875.00
505	5	EA	Valve Box Removal of Existing	$ 425.00	$ 2,125.00	$ 325.00	$ 1,625.00
510	3	EA	Valve Box Adjustment	$ 600.00	$ 1,800.00	$ 550.00	$ 1,650.00
515	1	EA	Valve Stem Extension, 0'-4' Depth	$ 200.00	$ 200.00	$ 250.00	$ 250.00
520	4	VF	Precast 4' Diameter Pit w/ Lid Min. 4' Depth	$ 925.00	$ 3,700.00	$ 825.00	$ 3,300.00
525	8	VF	Precast 6' Diameter Pit w/ Lid Min. 4' Depth	$ 1,000.00	$ 8,000.00	$ 1,050.00	$ 8,400.00
530	8	VF	Precast 8' Diameter Pit w/ Lid Min. 4' Depth	$ 1,500.00	$ 12,000.00	$ 1,075.00	$ 8,600.00
535	7	CY	Cast-In-Place RCP Vault w/ Lid	$ 1,000.00	$ 7,000.00	$ 1,025.00	$ 7,175.00
540	1	EA	Prefabricated Vault, 4' X 8'	$ 8,900.00	$ 8,900.00	$ 8,995.00	$ 8,995.00

				AAC		Sub Surface	
Bid Item	Approx. QTY.	Unit	Article and Description	Unit Price	Item Price	Unit Price	Item Price
545	1	ACRE	Native Seeding	$ 2,600.00	$ 2,600.00	$ 2,275.00	$ 2,275.00
550	1	EA	Bollards (pair)	$ 1,180.00	$ 1,180.00	$ 975.00	$ 975.00
555	18	LF	4" Steel Casing	$ 31.37	$ 564.66	$ 95.00	$ 1,710.00
560	18	LF	4" PVC Casing	$ 15.40	$ 277.20	$ 75.00	$ 1,350.00
565	18	LF	14" Steel Casing	$ 107.43	$ 1,933.74	$ 175.00	$ 3,150.00
570	18	LF	16" Steel Casing	$ 124.02	$ 2,232.36	$ 200.00	$ 3,600.00
575	18	LF	18" Steel Casing	$ 144.03	$ 2,592.54	$ 275.00	$ 4,950.00
580	18	LF	22" Steel Casing	$ 234.94	$ 4,228.92	$ 300.00	$ 5,400.00
585	18	LF	26" Steel Casing	$ 290.67	$ 5,232.06	$ 400.00	$ 7,200.00
590	18	LF	28" Steel Casing	$ 187.04	$ 3,366.72	$ 450.00	$ 8,100.00
595	18	LF	30" Steel Casing	$ 187.04	$ 3,366.72	$ 450.00	$ 8,100.00
600	18	LF	36" Steel Casing	$ 287.03	$ 5,166.54	$ 500.00	$ 9,000.00
605	50	DIA-IN- LF	Bore & Jack Casing Pipe	$ 575.00	$ 28,750.00	$ 40.00	$ 2,000.00
610	18	LF	Open Cut Casing Pipe Installation, < 6' Deep	$ 62.00	$ 1,116.00	$ 39.00	$ 702.00
615	25	SY	Asphalt Pavement Removal & Disposal, <2”	$ 29.50	$ 737.50	$ 65.00	$ 1,625.00
620	200	SY	Asphalt Pavement Removal & Disposal, 2”-6”	$ 17.70	$ 3,540.00	$ 65.00	$ 13,000.00
625	10	SY	Concrete Pavement Removal & Disposal, <2”	$ 97.50	$ 975.00	$ 90.00	$ 900.00
630	10	SY	Concrete Pavement Removal & Disposal, 2”-6”	$ 132.50	$ 1,325.00	$ 95.00	$ 950.00
635	50	LF	Concrete Curb and Gutter Removal & Disposal	$ 12.00	$ 600.00	$ 25.00	$ 1,250.00
640	10	SY	Concrete Sidewalk Removal & Disposal	$ 65.00	$ 650.00	$ 30.00	$ 300.00
645	50	SY	Replace City Street Pavement w/o Laydown Machine, Virgin Asphalt	$ 74.50	$ 3,725.00	$ 75.00	$ 3,750.00
650	50	SY	Replace City Street Pavement w/o Laydown Machine, Recycled Asphalt	$ 74.50	$ 3,725.00	$ 75.00	$ 3,750.00
655	50	SY	Replace City Street Pavement with Laydown Machine, Virgin Asphalt	$ 72.00	$ 3,600.00	$ 75.00	$ 3,750.00
660	10	SY	Replace City Street Pavement with Laydown Machine, Recycled Asphalt	$ 84.96	$ 849.60	$ 75.00	$ 750.00
665	10	SY	Replace City Street Pavement with Temporary Cold Mix	$ 167.56	$ 1,675.60	$ 75.00	$ 750.00
670	100	SY	Replace Non-City Street Pavement w/o Laydown Machine, Virgin Asphalt	$ 74.50	$ 7,450.00	$ 75.00	$ 7,500.00
675	10	SY	Replace Non-City Street Pavement w/o Laydown Machine, Recycled Asphalt	$ 74.50	$ 745.00	$ 75.00	$ 750.00
680	10	SY	Replace Non-City Street Pavement with Laydown Machine, Virgin Asphalt	$ 92.00	$ 920.00	$ 75.00	$ 750.00
685	10	SY	Replace Non-City Street Pavement with Laydown Machine, Recycled Asphalt	$ 92.00	$ 920.00	$ 75.00	$ 750.00
690	1	SY	Replace Non-City Street Pavement with Temporary Cold Mix	$ 167.56	$ 167.56	$ 75.00	$ 75.00
695	10	SY	Replace Concrete Pavement	$ 261.50	$ 2,615.00	$ 275.00	$ 2,750.00
700	50	LF	Replace Concrete Curb & Gutter	$ 45.00	$ 2,250.00	$ 45.00	$ 2,250.00
705	10	SY	Replace Concrete Sidewalk	$ 155.00	$ 1,550.00	$ 170.00	$ 1,700.00
710	10	CY	Replace Gravel Surface, 0”-2”	$ 56.00	$ 560.00	$ 85.00	$ 850.00
715	10	CY	Replace Gravel Surface, 2”-4”	$ 66.00	$ 660.00	$ 120.00	$ 1,200.00
720	150	SY	Base course/Gravel (crushed or landscape), 0’-3”	$ 34.00	$ 5,100.00	$ 35.00	$ 5,250.00
725	50	SY	Base course/Gravel (crushed or landscape), 3”-6”	$ 45.00	$ 2,250.00	$ 45.00	$ 2,250.00
730	4	EA	Service, 3/4" Single, New Main	$ 1,262.50	$ 5,050.00	$ 1,475.00	$ 5,900.00
735	2	EA	Service, 3/4" Double, New Main	$ 1,662.50	$ 3,325.00	$ 1,775.00	$ 3,550.00
740	2	EA	Service, 1", New Main	$ 1,887.50	$ 3,775.00	$ 1,825.00	$ 3,650.00
745	1	EA	Service, 1 1/2", New Main	$ 3,670.00	$ 3,670.00	$ 3,450.00	$ 3,450.00
750	1	EA	Service, 2", New Main	$ 3,985.00	$ 3,985.00	$ 3,870.00	$ 3,870.00
755	5	EA	Service, 3/4" Single, Existing Main	$ 1,450.00	$ 7,250.00	$ 1,475.00	$ 7,375.00
760	2	EA	Service, 3/4" Double, Existing Main	$ 1,912.50	$ 3,825.00	$ 1,775.00	$ 3,550.00
765	1	EA	Service, 1", Existing Main	$ 1,900.00	$ 1,900.00	$ 1,825.00	$ 1,825.00
770	1	EA	Service, 1 1/2", Existing Main	$ 3,670.00	$ 3,670.00	$ 3,450.00	$ 3,450.00
775	1	EA	Service, 2", Existing Main	$ 4,300.00	$ 4,300.00	$ 3,870.00	$ 3,870.00
780	5	EA	Service Replacement, 3/4"	$ 1,602.50	$ 8,012.50	$ 1,475.00	$ 7,375.00
785	2	EA	Service Replacement, Double, 3/4"	$ 1,950.00	$ 3,900.00	$ 1,775.00	$ 3,550.00
790	1	EA	Service Replacement, 1”	$ 2,100.00	$ 2,100.00	$ 1,825.00	$ 1,825.00

				AAC		Sub Surface	
Bid Item	**Approx. QTY.**	**Unit**	**Article and Description**	**Unit Price**	Item Price	**Unit Price**	Item Price
795	1	EA	Service Replacement, 1 1/2"	**$ 3,875.00**	$ 3,875.00	**$ 3,450.00**	$ 3,450.00
800	1	EA	Service Replacement, 2"	**$ 4,512.00**	$ 4,512.00	**$ 3,870.00**	$ 3,870.00
805	3	EA	Meter Box Relocation/Replacement, 3/4"	**$ 1,000.00**	$ 3,000.00	**$ 895.00**	$ 2,685.00
810	1	EA	Meter Box Relocation/Replacement, 1"	**$ 1,150.00**	$ 1,150.00	**$ 915.00**	$ 915.00
815	1	EA	Meter Box Relocation/Replacement, 1-1/2"	**$ 1,800.00**	$ 1,800.00	**$ 1,400.00**	$ 1,400.00
820	1	EA	Meter Box Relocation/Replacement, 2"	**$ 1,900.00**	$ 1,900.00	**$ 1,400.00**	$ 1,400.00
825	5	EA	Service Transfer, 3/4"	**$ 812.50**	$ 4,062.50	**$ 725.00**	$ 3,625.00
830	2	EA	Service Transfer, 1"	**$ 912.50**	$ 1,825.00	**$ 825.00**	$ 1,650.00
835	1	EA	Service Transfer, 1 1/2"	**$ 1,112.50**	$ 1,112.50	**$ 925.00**	$ 925.00
840	1	EA	Service Transfer at Main, 2"	**$ 1,325.00**	$ 1,325.00	**$ 975.00**	$ 975.00
845	1	EA	Retire Existing Service at Main, 3/4"- 2"	**$ 962.50**	$ 962.50	**$ 725.00**	$ 725.00
850	1	EA	Retire Existing Meter Box & Setting	**$ 437.50**	$ 437.50	**$ 525.00**	$ 525.00
855	1	EA	Adjust Meter Box To Grade	**$ 412.50**	$ 412.50	**$ 425.00**	$ 425.00
860	11	EA	Service Saddle, 3/4" Tap, 4"-12" Main	**$ 500.00**	$ 5,500.00	**$ 650.00**	$ 7,150.00
865	4	EA	Service Saddle, 1" Tap, 4"-12" Main	**$ 462.50**	$ 1,850.00	**$ 675.00**	$ 2,700.00
870	3	EA	Service Saddle, 1 1/2" Tap, 4"-12" Main	**$ 562.50**	$ 1,687.50	**$ 750.00**	$ 2,250.00
875	3	EA	Service Saddle, 2" Tap, 4"-12" Main	**$ 650.00**	$ 1,950.00	**$ 775.00**	$ 2,325.00
880	100	LF	Service Tubing, 3/4"	**$ 28.75**	$ 2,875.00	**$ 31.50**	$ 3,150.00
885	100	LF	Service Tubing, 1"	**$ 34.12**	$ 3,412.00	**$ 33.75**	$ 3,375.00
890	100	LF	Service Tubing, 1 1/2"	**$ 46.50**	$ 4,650.00	**$ 44.00**	$ 4,400.00
895	25	LF	Service Tubing, 2"	**$ 65.50**	$ 1,637.50	**$ 53.00**	$ 1,325.00
900	1	EA	Air and Vacuum Valve (individual)	**$ 450.00**	$ 450.00	**$ 1,550.00**	$ 1,550.00
905	1	GROUP OF 10	Air and Vacuum Valves	**$ 8,045.00**	$ 8,045.00	**$ 15,500.00**	$ 15,500.00
910	1	EA	Automatic Flushing Valve	**$ 5,867.50**	$ 5,867.50	**$ 4,350.00**	$ 4,350.00
915	$20,000	%	Materials Mark-Up Over Invoice	**$ 3,600.00**	$ 3,600.00	**$ 1,500.00**	$ 1,500.00
920	$8,000	%	Traffic Control Mark-Up Over Invoice	**$ 1,440.00**	$ 1,440.00	**$ 1,200.00**	$ 1,200.00
925	1	Allow.	Street-Cut Permits	**$ 175.00**	$ 175.00	**$ 375.00**	$ 375.00
930	1	EA	Project Signs	**$ 675.00**	$ 675.00	**$ 450.00**	$ 450.00
935	10	HR	Archeological Required Delay (after 2 hrs.)	**$ 250.00**	$ 2,500.00	**$ 185.00**	$ 1,850.00
940	1	LS	Archeological Required Mob/Demob	**$ 725.00**	$ 725.00	**$ 700.00**	$ 700.00
EMERGENCY REPAIR					$ -		$ -
9000	175	HR	Supervisor's Truck with tools	**$ 35.00**	$ 6,125.00	**$ 30.00**	$ 5,250.00
9100	80	HR	Backhoe/Skid Steer	**$ 57.00**	$ 4,560.00	**$ 58.00**	$ 4,640.00
9200	8	HR	Compressor with tools	**$ 54.00**	$ 432.00	**$ 35.00**	$ 280.00
9300	16	HR	Dump Truck	**$ 65.00**	$ 1,040.00	**$ 60.00**	$ 960.00
9400	4	HR	Pump	**$ 25.00**	$ 100.00	**$ 15.00**	$ 60.00
9500	300	HR	Laborer	**$ 42.50**	$ 12,750.00	**$ 43.00**	$ 12,900.00
9600	200	HR	Pipe Fitter	**$ 44.50**	$ 8,900.00	**$ 45.00**	$ 9,000.00
9700	200	HR	Equipment Operator	**$ 57.50**	$ 11,500.00	**$ 58.00**	$ 11,600.00
9800	175	HR	Foreman	**$ 59.50**	$ 10,412.50	**$ 60.00**	$ 10,500.00
9900	$5,000	%	Rental Items Mark-Up Over Invoice (multiply $5,000 x your % for Item Price)	**$ 1,000.00**	$ 1,000.00	**$ 900.00**	$ 900.00
9950	$20,000	%	Materials Mark-Up Over Invoice (multiply $20,000 x your 5 for Item Price)	**$ 3,600.00**	$ 3,600.00	**$ 1,500.00**	$ 1,500.00

Signature: Michael Moya
Michael Moya (Aug 18, 2021 07:37 MDT)

Email: mrmoya@ci.santa-fe.nm.us

City of Santa Fe

Real Estate Summary of Contracts, Agreements, Amendments & Leases

Section to be completed by department

1. Munis Contract # **3202929**

Contractor: **Sub Surface Contracting**

Description: **CIP# 3058 Priority Line Replacement**

Contract ☐ Agreement ☉ Lease / Rent ☐ Amendment ☐

Term Start Date: **as approved** Term End Date: **6/30/25**

☑ Approved by Council Date: **Pending**

Contract / Lease: **Contract $2,250,000**

Amendment # _____ to the Original Contract / Lease # _____

Increase/(Decrease) Amount $ _____

Extend Termination Date to: _____

☐ Approved by Council Date: _____

Amendment is for:

2. **HISTORY** of Contract, Amendments & Lease / Rent - **Please Elaborate** (option: attach spreadsheet if multiple amendments)

3. **Procurement History:** **21/43/B**

Fran Dawaway (Aug 23, 2021 12:29 MDT) Aug 23, 2021

Purchasing Officer Review: Date:

Comment & Exceptions: Issuance of award from ITB 21/43/B. 1st. year.

4. **Funding Source:** **Water Enterprise Fund CIP** **Org / Object:** **5050395.572970**

Andy Hopkins (Aug 23, 2021 11:13 MDT) Aug 23, 2021

Budget Officer Approval: Date:

Comment & Exceptions: _____

Staff Contact who completed this form: **Maya Martinez** Phone # **4271**

Email: **mfmartinez@santafenm.gov**

To be recorded by City Clerk:

Clerk # _____

Date of Execution: _____

SUBSURF-01 DONISCHUK

CERTIFICATE OF LIABILITY INSURANCE

DATE (MM/DD/YYYY) 5/20/2021

THIS CERTIFICATE IS ISSUED AS A MATTER OF INFORMATION ONLY AND CONFERS NO RIGHTS UPON THE CERTIFICATE HOLDER. THIS CERTIFICATE DOES NOT AFFIRMATIVELY OR NEGATIVELY AMEND, EXTEND OR ALTER THE COVERAGE AFFORDED BY THE POLICIES BELOW. THIS CERTIFICATE OF INSURANCE DOES NOT CONSTITUTE A CONTRACT BETWEEN THE ISSUING INSURER(S), AUTHORIZED REPRESENTATIVE OR PRODUCER, AND THE CERTIFICATE HOLDER.

IMPORTANT: If the certificate holder is an ADDITIONAL INSURED, the policy(ies) must have ADDITIONAL INSURED provisions or be endorsed. If SUBROGATION IS WAIVED, subject to the terms and conditions of the policy, certain policies may require an endorsement. A statement on this certificate does not confer rights to the certificate holder in lieu of such endorsement(s).

PRODUCER License # 0757776 HUB International Insurance Services (SOW) 2905 Rodeo Park Drive East Building 6, Suite 100 Santa Fe, NM 87505	CONTACT NAME: Michelle Vialpando PHONE (A/C, No, Ext): (505) 992-1873 FAX (A/C, No): (866) 621-0427 E-MAIL ADDRESS: michelle.vialpando@hubinternational.com
INSURED Sub Surface Contracting Inc 27A Paseo De River St Santa Fe, NM 87507	INSURER(S) AFFORDING COVERAGE — NAIC # INSURER A : ACUITY, A Mutual Insurance Company — 14184 INSURER B : Builders Trust of New Mexico INSURER C : INSURER D : INSURER E : INSURER F :

COVERAGES **CERTIFICATE NUMBER:** **REVISION NUMBER:**

THIS IS TO CERTIFY THAT THE POLICIES OF INSURANCE LISTED BELOW HAVE BEEN ISSUED TO THE INSURED NAMED ABOVE FOR THE POLICY PERIOD INDICATED. NOTWITHSTANDING ANY REQUIREMENT, TERM OR CONDITION OF ANY CONTRACT OR OTHER DOCUMENT WITH RESPECT TO WHICH THIS CERTIFICATE MAY BE ISSUED OR MAY PERTAIN, THE INSURANCE AFFORDED BY THE POLICIES DESCRIBED HEREIN IS SUBJECT TO ALL THE TERMS, EXCLUSIONS AND CONDITIONS OF SUCH POLICIES. LIMITS SHOWN MAY HAVE BEEN REDUCED BY PAID CLAIMS.

INSR LTR	TYPE OF INSURANCE	ADDL INSD	SUBR WVD	POLICY NUMBER	POLICY EFF (MM/DD/YYYY)	POLICY EXP (MM/DD/YYYY)	LIMITS	
A	X COMMERCIAL GENERAL LIABILITY CLAIMS-MADE X OCCUR X PD Ded: $500 GEN'L AGGREGATE LIMIT APPLIES PER: POLICY X PRO-JECT LOC OTHER:			Z75944	7/1/2020	7/1/2021	EACH OCCURRENCE DAMAGE TO RENTED PREMISES (Ea occurrence) MED EXP (Any one person) PERSONAL & ADV INJURY GENERAL AGGREGATE PRODUCTS - COMP/OP AGG 	$ 1,000,000 $ 250,000 $ 10,000 $ 1,000,000 $ 3,000,000 $ 3,000,000 $
A	AUTOMOBILE LIABILITY X ANY AUTO OWNED AUTOS ONLY SCHEDULED AUTOS X HIRED AUTOS ONLY X NON-OWNED AUTOS ONLY			Z75944	7/1/2020	7/1/2021	COMBINED SINGLE LIMIT (Ea accident) BODILY INJURY (Per person) BODILY INJURY (Per accident) PROPERTY DAMAGE (Per accident) 	$ 1,000,000 $ $ $ $
A	UMBRELLA LIAB X OCCUR X EXCESS LIAB CLAIMS-MADE DED X RETENTION $ 0			Z75944	7/1/2020	7/1/2021	EACH OCCURRENCE AGGREGATE 	$ 2,000,000 $ 2,000,000 $
B	WORKERS COMPENSATION AND EMPLOYERS' LIABILITY ANY PROPRIETOR/PARTNER/EXECUTIVE OFFICER/MEMBER EXCLUDED? (Mandatory in NH) Y / N: Y If yes, describe under DESCRIPTION OF OPERATIONS below	N / A		0692	1/1/2021	1/1/2022	X PER STATUTE OTH-ER E.L. EACH ACCIDENT E.L. DISEASE - EA EMPLOYEE E.L. DISEASE - POLICY LIMIT	$ 2,000,000 $ 2,000,000 $ 2,000,000
A	Leased/Rented Eqpt			Z75944	7/1/2020	7/1/2021	Ded: $500 / Limit	200,000

DESCRIPTION OF OPERATIONS / LOCATIONS / VEHICLES (ACORD 101, Additional Remarks Schedule, may be attached if more space is required)

CERTIFICATE HOLDER

City of Santa Fe
Public Utilities Department
801 West San Mateo
Santa Fe, NM 87505

CANCELLATION

SHOULD ANY OF THE ABOVE DESCRIBED POLICIES BE CANCELLED BEFORE THE EXPIRATION DATE THEREOF, NOTICE WILL BE DELIVERED IN ACCORDANCE WITH THE POLICY PROVISIONS.

AUTHORIZED REPRESENTATIVE

© 1988-2015 ACORD CORPORATION. All rights reserved.
The ACORD name and logo are registered marks of ACORD

SUBSURF-01 DONISCHUK

CERTIFICATE OF LIABILITY INSURANCE

DATE (MM/DD/YYYY) 5/20/2021

THIS CERTIFICATE IS ISSUED AS A MATTER OF INFORMATION ONLY AND CONFERS NO RIGHTS UPON THE CERTIFICATE HOLDER. THIS CERTIFICATE DOES NOT AFFIRMATIVELY OR NEGATIVELY AMEND, EXTEND OR ALTER THE COVERAGE AFFORDED BY THE POLICIES BELOW. THIS CERTIFICATE OF INSURANCE DOES NOT CONSTITUTE A CONTRACT BETWEEN THE ISSUING INSURER(S), AUTHORIZED REPRESENTATIVE OR PRODUCER, AND THE CERTIFICATE HOLDER.

IMPORTANT: If the certificate holder is an ADDITIONAL INSURED, the policy(ies) must have ADDITIONAL INSURED provisions or be endorsed. If SUBROGATION IS WAIVED, subject to the terms and conditions of the policy, certain policies may require an endorsement. A statement on this certificate does not confer rights to the certificate holder in lieu of such endorsement(s).

PRODUCER License # 0757776 HUB International Insurance Services (SOW) 2905 Rodeo Park Drive East Building 6, Suite 100 Santa Fe, NM 87505	CONTACT NAME: Michelle Vialpando PHONE (A/C, No, Ext): (505) 992-1873 FAX (A/C, No): (866) 621-0427 E-MAIL ADDRESS: michelle.vialpando@hubinternational.com
INSURED Sub Surface Contracting Inc 27A Paseo De River St Santa Fe, NM 87507	INSURER(S) AFFORDING COVERAGE — NAIC # INSURER A : ACUITY, A Mutual Insurance Company — 14184 INSURER B : Builders Trust of New Mexico INSURER C : INSURER D : INSURER E : INSURER F :

COVERAGES **CERTIFICATE NUMBER:** **REVISION NUMBER:**

THIS IS TO CERTIFY THAT THE POLICIES OF INSURANCE LISTED BELOW HAVE BEEN ISSUED TO THE INSURED NAMED ABOVE FOR THE POLICY PERIOD INDICATED. NOTWITHSTANDING ANY REQUIREMENT, TERM OR CONDITION OF ANY CONTRACT OR OTHER DOCUMENT WITH RESPECT TO WHICH THIS CERTIFICATE MAY BE ISSUED OR MAY PERTAIN, THE INSURANCE AFFORDED BY THE POLICIES DESCRIBED HEREIN IS SUBJECT TO ALL THE TERMS, EXCLUSIONS AND CONDITIONS OF SUCH POLICIES. LIMITS SHOWN MAY HAVE BEEN REDUCED BY PAID CLAIMS.

INSR LTR	TYPE OF INSURANCE	ADDL INSD	SUBR WVD	POLICY NUMBER	POLICY EFF (MM/DD/YYYY)	POLICY EXP (MM/DD/YYYY)	LIMITS	
A	X COMMERCIAL GENERAL LIABILITY CLAIMS-MADE X OCCUR X PD Ded: $500 GEN'L AGGREGATE LIMIT APPLIES PER: POLICY X PRO-JECT LOC OTHER:			Z75944	7/1/2021	7/1/2022	EACH OCCURRENCE DAMAGE TO RENTED PREMISES (Ea occurrence) MED EXP (Any one person) PERSONAL & ADV INJURY GENERAL AGGREGATE PRODUCTS - COMP/OP AGG 	$ 1,000,000 $ 250,000 $ 10,000 $ 1,000,000 $ 3,000,000 $ 3,000,000 $
A	AUTOMOBILE LIABILITY X ANY AUTO OWNED AUTOS ONLY SCHEDULED AUTOS X HIRED AUTOS ONLY X NON-OWNED AUTOS ONLY			Z75944	7/1/2021	7/1/2022	COMBINED SINGLE LIMIT (Ea accident) BODILY INJURY (Per person) BODILY INJURY (Per accident) PROPERTY DAMAGE (Per accident) 	$ 1,000,000 $ $ $ $
A	UMBRELLA LIAB X OCCUR X EXCESS LIAB CLAIMS-MADE DED X RETENTION $ 0			Z75944	7/1/2021	7/1/2022	EACH OCCURRENCE AGGREGATE 	$ 2,000,000 $ 2,000,000 $
B	WORKERS COMPENSATION AND EMPLOYERS' LIABILITY ANY PROPRIETOR/PARTNER/EXECUTIVE OFFICER/MEMBER EXCLUDED? (Mandatory in NH) Y / N: Y If yes, describe under DESCRIPTION OF OPERATIONS below	N / A		0692	1/1/2021	1/1/2022	X PER STATUTE OTH-ER E.L. EACH ACCIDENT E.L. DISEASE - EA EMPLOYEE E.L. DISEASE - POLICY LIMIT	 $ 2,000,000 $ 2,000,000 $ 2,000,000
A	Leased/Rented Eqpt			Z75944	7/1/2021	7/1/2022	Ded: $500 / Limit	200,000

DESCRIPTION OF OPERATIONS / LOCATIONS / VEHICLES (ACORD 101, Additional Remarks Schedule, may be attached if more space is required)

CERTIFICATE HOLDER

City of Santa Fe
Public Utilities Department
801 West San Mateo
Santa Fe, NM 87505

CANCELLATION

SHOULD ANY OF THE ABOVE DESCRIBED POLICIES BE CANCELLED BEFORE THE EXPIRATION DATE THEREOF, NOTICE WILL BE DELIVERED IN ACCORDANCE WITH THE POLICY PROVISIONS.

AUTHORIZED REPRESENTATIVE

© 1988-2015 ACORD CORPORATION. All rights reserved.
The ACORD name and logo are registered marks of ACORD

City of Santa Fe

Treasury Department
200 Lincoln Ave.
Santa Fe, New Mexico 87504-0909
505-955-6551

BUSINESS REGISTRATION

Business Name: SUB SURFACE CONTRACTING INC.
DBA: SUB SURFACE CONTRACTING INC.

Business Location: 27 PASEO DE RIVER A
SANTA FE , NM 87507

CRS Number: 02104256000

Owner: SUB SURFACE CONTRACTING INC.

License Number: 46991

License Type: Business License - Renewable

Issued Date: April 01, 2021

Classification: Contractor - Specialty

Expiration Date: April 01, 2022

Fees Paid: $35.00

SUB SURFACE CONTRACTING INC.
27 A PASEO DE RIVER
SANTA FE, NM 87507

THIS IS NOT A CONSTRUCTION PERMIT OR SIGN PERMIT. APPROPRIATE PERMITS MUST BE OBTAINED FROM THE CITY OF SANTA FE BUILDING PERMIT DIVISION PRIOR TO COMMENCEMENT OF ANY CONSTRUCTION OR THE INSTALLATION OF ANY EXTERIOR SIGN.

THIS REGISTRATION/LICENSE IS NOT TRANSFERRABLE TO OTHER BUSINESSES OR PREMISES.

TO BE POSTED IN A CONSPICUOUS PLACE

CITY OF SANTA FE PROCUREMENT CHECKLIST

Contractor Name: Sub Surface Contracting, Inc.

Procurement Title: 21/43/B Priority Line Replacement Price Agreement, CIP # 3058

Procurement Method: State Price Agreement ☐ *Cooperative* ☐ *Sole Source* ☐ *Other* ☐ _____

Exempt ☐ *Request For Proposal (*RFP) ☒ *Invitation To Bid (ITB)* ☐ *Contract under 60K* ☐ *Contract over 60K* ☐

Department Requesting Bill Huey Water Division, PUD

Procurement Requirements:
A procurement file shall be maintained for all contracts, regardless of the method of procurement. The procurement file shall contain the basis on which the award is made, all submitted bids, all evaluation materials, score sheets, quotations and all other documentation related to or prepared in conjunction with evaluation, negotiation, and the award process. The procurement shall contain a written determination from the Requesting Department, signed by the purchasing officer, setting forth the reasoning for the contract award decision before submitting to the Committees. .

REQUIRED DOCUMENTS FOR APPROVAL BY PURCHASING*

YES	N/A	
☒	☐	Approved Procurement Checklist (by Purchasing)
☒	☐	Memo addressed to City Manager (under 60K) Committees/City Council (over 60K)
☐	☒	State Price Agreement
☐	☒	RFP
☐	☒	Evaluation Committee Report
☒	☐	ITB
☒	☐	Bib Tab
☐	☒	Quotes (3 valid current quotes)
☐	☒	Cooperative Agreement
☐	☒	Sole Source Request and Determination Form
☐	☒	Contractors Exempt Letter
☒	☐	Purchasing Officers approval for exempt procurement
☐	☒	BAR
☐	☒	FIR
☒	☐	Executed Contract, Agreement or Amendment
☒	☐	Current Business Registration and CRS numbers on contract or agreement
☒	☐	Summary of Contracts and Agreements form
☐	☒	Certificate of Insurance
☐	☐	All documentation presented to Committees
☐	☐	Other: _____

Public Utilities Dept / Water Division/Bill Huey (Bill Huey)	Engineer	8/17/21
Department Rep Printed Name (attesting that all information included)	Title	Date
Fran Dunaway (Fran Dunaway, Aug 23, 2021 12:29 MDT)	Chief Procurement Officer	Aug 23, 2021
Purchasing Officer (attesting that all information is reviewed)	Title	Date

Include all other substantive documents and records of communication that pertain to the procurement and any resulting contract.

*

Item # 23-0182
Munis# 3202929

CITY OF SANTA FE
AMENDMENT No. 1 TO
THE PRIORITY LINE REPLACEMENT
PRICE AGREEMENT
ITEM# 21-0484

This AMENDMENT No. 1 (the "Amendment") to the CITY OF SANTA FE AGREEMENT dated September 8, 2021 (the "Agreement"), between the City of Santa Fe (the "City") and Sub Surface Contracting Inc. (the "Contractor"). The date of this Amendment shall be the date when it is executed by the City.

RECITALS

A. Under the terms of the Agreement, Contractor has agreed to provide services for the Priority Line Replacement for the City of Santa Fe.

B. Pursuant to Article 14 of the Agreement, and for good and valuable consideration, the receipt and sufficiency of which are acknowledged by the parties, the City and the Contractor agree as follows:

1. COMPENSATION.

Article 2, paragraph A of the Agreement is amended to increase the "up to" amount by two million seven hundred and ninety thousand dollars ($2,790,000), so that Article 2, paragraph A reads in its entirety as follows:

A. The City shall pay to the Contractor in full payment for services satisfactorily performed at total amount up to four million six hundred forty nine thousand nine hundred and twenty seven dollars and ninety five cents ($4,649,927.95). The New Mexico gross receipts tax levied on the amounts payable under this Agreement totaling one hundred eighty nine thousand eight hundred forty three dollars and seventy five cents ($390,072.05) shall be paid by the City to the Contractor as described in Exhibit A attached hereto. **The total amount payable to the Contractor under this Agreement, including gross receipts tax and expenses, shall not five million forty thousand dollars ($5,040,000.). This amount is a maximum and not a guarantee that the work assigned to be performed by Contractor under this Agreement shall equal the amount stated herein. The parties do not intend for**

the Contractor to continue to provide services without compensation when the total compensation amount is reached. Contractor is responsible for notifying the City when the services provided under this Agreement reach the total compensation amount. In no event will the Contractor be paid for services provided in excess of the total compensation amount without this Agreement being amended in writing prior to those services in excess of the total compensation amount being provided.

2. AGREEMENT IN FULL FORCE.

Except as specifically provided in this Amendment, the Agreement remains and shall remain in full force and effect, in accordance with its terms.

IN WITNESS WHEREOF, the parties have executed this Amendment No.1 to the City of Santa Fe Price Agreement as of the dates set forth below.

CITY OF SANTA FE:

ALAN WEBBER, MAYOR

Date: May 1, 2023

CONTRACTOR:
SUB SURFACE CONTRACTING.

NAME & TITLE

Date: 3-28-2023
CRS# 02104256000
Registration #46991

ATTEST:

KRISTINE BUSTOS MIHELCIC ,CITY CLERK XIV
GB MTG 04/26/23

APPROVED AS TO FORM:

Patricia Feghali
Patricia Feghali (Mar 24, 2023 10:06 MDT)

PATRICIA FEGHALI, ASSISTANT CITY ATTORNEY

APPROVED FOR FINANCES:

Emily K. Oster
Emily K. Oster (Apr 30, 2023 22:28 MDT)

EMILY OSTER, FINANCE DIRECTOR

5050395.572970 WTR1950536
Org/Obj

City of Santa Fe, New Mexico

memo

Date: March 28, 2023

To: Finance Committee / Public Works-Public Utilities Committee

Via: Emily Oster, Finance Director EKO
Travis Dutton-Leyda, Chief Procurement Officer TDL
John Dupuis, Public Utilities Department Director JD
Jesse D. Roach, Water Division Director

From: Michael R. Moya, T&D Section Manager
Bill Huey, Water Division Engineer Associate BH

RE: Request approval of Amendment #1 to add funds to the Priority Line Replacement Price Agreement, CIP # 3058 Sub Surface Constructionin the amount of $2,790,000 including NMGRT for the remainder of the contract term (FY2024-25).

ITEM AND ISSUE:

The Water Division requests increasing the amount of award for bid number '21/43/B for the FY 22/23 Priority Line Replacement Price Agreement, CIP # 3058 to Sub Surface Construction by $2,790,000.00 inclusive of NMGRT for the remaining three (3) Fiscal Years, FY 2022-23 until FY2024-25.

Approval of the BAR – Budget Increase in the amount of $5,000,000 from the Water Enterprise Fund cash balance into the Water CIP fund for FY 2023, of which $2,790,000 is for this amendment.

BACKGROUND AND SUMMARY:

City Council has awarded bid number '21/43/B for the Priority Line Replacement Price Agreement, CIP # 3058 to Sub Surface Contracting, Inc. (Sub Surface) and A.A.C. Construction, LLC (AAC) for four (4) Fiscal Years, FY 2021-22 until FY2024-25 in the amount of $3,500,000 inclusive of NMGRT. Future funding was dependent upon the availability of CIP funds.

The Priority Line Replacement Price Agreement is an on-call requirements contract, with the Water Division issuing work orders as needed for work such as water line replacements. The contract is funded from CIP for Transmission and Distribution to work on their infrastructure.

Current expenditures on this contract are still at or below the initial contract amount. Current work on the contract will need additional funds. The contract funding needed for the completion of the contract term for Sub Surface is $2,790,000 inclusive of NMGRT. Total funding for the entire contract with AAC will be $5,040,000 inclusive of NMGRT. Funding for this amendment #1 will be available upon approval of the BAR/ Increase attached to Item D, AAC PLR Amendment #1 on this agenda. The BAR is in the amount of $5,000,000 including $2,790,000 for Sub Surface PLR #1 and $2,210,000 for AAC PLR #1 for a combined amount of $2,790,000 for a combined amount of $5,000,000.

PROCUREMENT:
21/43/B for the FY 2022 Priority Line Replacement

CONTRACT NUMBER:

A.A.C Construction # 3202778.

FUNDING SOURCE:
The funding source is:
Water Enterprise Fund/ CIP
FY 2023
Fund Name/Number: Water Enterprise Fund/ 500
Munis Org Name/Number: Water CIP / 5050395
Munis Object Name/Number: WIP Construction / 572970

RECOMMENDATION:

The Water Division recommends:

- Review and approval of increase of contract amount to Sub Surface Construction for the Priority Line Replacement Price Agreement, CIP # 3058 under ITB No. '21/43/B of $2,790,000 for a total amount of $5,040,000 inclusive of NMGRT through FY2024-25.

Log # *{Finance use only}*:	
Batch # *{Finance use only}*:	

City of Santa Fe, New Mexico
BUDGET AMENDMENT RESOLUTION (BAR)

DEPARTMENT / DIVISION NAME	DATE
PUD/Water/CIP	3/17/2023

ITEM DESCRIPTION	ORG	OBJECT	PROJECT	INCREASE	DECREASE
EXPENDITURES				*{enter as positive #}*	*{enter as negative #}*
Water CIP WIP Construction	5050395	572970	WTR1950535	5,000,000	
REVENUES				*{enter as negative #}*	*{enter as positive #}*
				$ 5,000,000	$ -

JUSTIFICATION: *(use additional page if needed)*
--Attach supporting documentation/memo

Budget Increase from Cash Balance in Water Enterprise Fund for Priority Line Replacement

Price Agreements Amendments #1 to A.A.C Construction and Sub Surface for

FY 23 CIP3058

{Complete section below if BAR results in a net change to ANY Fund}

Fund(s) Affected	Fund Balance Increase/(Decrease)
505	(5,000,000)
TOTAL:	**(5,000,000)**

Maya Martinez — 3/17/2023
Prepared By *{print name}* — Date

Division Director Signature *{optional}* — Date

John Dupuis (Apr 4, 2023 17:41 MDT)
Department Director Signature — Date

{Use this form for Finance Committee/ City Council agenda items ONLY}

CITY COUNCIL APPROVAL

City Council Approval Date

Agenda Item #:

Andy Hopkins — 4/5/23
Budget Officer — Date

Finance Director *{≤ $5,000}* — Date

City Manager *{≤ $60,000}* — Date

City of Santa Fe

Real Estate Summary of Contracts, Agreements, Amendments & Leases

Section to be completed by department

1. Munis Contract # **3202929**

Contractor: **Sub Surface Contracting**

Description: **CIP# 3058 Priority Line Replacement**

Contract ☐ Agreement ☉ Lease / Rent ☐ Amendment ☐

Term Start Date: **as approved** Term End Date: **6/30/25**

☑ Approved by Council Date: **Pending**

Contract / Lease: Contract $2,250,000

Amendment # 1 to the Original Contract / Lease # 21-0484

Increase/(Decrease) Amount $ 2,790,000

Extend Termination Date to: N/A

☉ Approved by Council Date: Pending

Amendment is for:

2. **HISTORY of Contract, Amendments & Lease / Rent - Please Elaborate** (option: attach spreadsheet if multiple amendments)

Original Contract # 21-0484 $2,250,000 approved 9/8/21

3. **Procurement History: 21/43/B**

Purchasing Officer Review: Apr 5, 2023 Date:

Comment & Exceptions: Amending compensation

4. **Funding Source: Water Enterprise Fund CIP** **Org / Object: 5050395.572970**

Andy Hopkins
Andy Hopkins (Apr 5, 2023 17:18 MDT)

Budget Officer Approval: Apr 5, 2023 Date:

Comment & Exceptions:

Staff Contact who completed this form: Maya Martinez Phone # **4271**

Email: **mfmartinez@santafenm.gov**

To be recorded by City Clerk:

Clerk #

Date of Execution:

City of Santa Fe

Treasury Department
200 Lincoln Ave.
Santa Fe, New Mexico 87504-0909
505-955-6551

BUSINESS REGISTRATION

Business Name: SUB SURFACE CONTRACTING INC.
DBA: SUB SURFACE CONTRACTING INC.

Business Location: 27 PASEO DE RIVER A
SANTA FE , NM 87507

CRS Number: 02104256000

Owner: SUB SURFACE CONTRACTING INC.

License Number: 46991

License Type: Business License - Renewable

Issued Date: March 28, 2022

Classification: Contractor - Specialty

Expiration Date: March 28, 2023

Fees Paid: $35.00

SUB SURFACE CONTRACTING INC.
27 A PASEO DE RIVER
SANTA FE, NM 87507

THIS IS NOT A CONSTRUCTION PERMIT OR SIGN PERMIT. APPROPRIATE PERMITS MUST BE OBTAINED FROM THE CITY OF SANTA FE BUILDING PERMIT DIVISION PRIOR TO COMMENCEMENT OF ANY CONSTRUCTION OR THE INSTALLATION OF ANY EXTERIOR SIGN.

THIS REGISTRATION/LICENSE IS NOT TRANSFERRABLE TO OTHER BUSINESSES OR PREMISES.

TO BE POSTED IN A CONSPICUOUS PLACE

Ver 1.6 2.7.2020

ACORD

CERTIFICATE OF LIABILITY INSURANCE

DATE (MM/DD/YYYY)
12/26/2022

THIS CERTIFICATE IS ISSUED AS A MATTER OF INFORMATION ONLY AND CONFERS NO RIGHTS UPON THE CERTIFICATE HOLDER. THIS CERTIFICATE DOES NOT AFFIRMATIVELY OR NEGATIVELY AMEND, EXTEND OR ALTER THE COVERAGE AFFORDED BY THE POLICIES BELOW. THIS CERTIFICATE OF INSURANCE DOES NOT CONSTITUTE A CONTRACT BETWEEN THE ISSUING INSURER(S), AUTHORIZED REPRESENTATIVE OR PRODUCER, AND THE CERTIFICATE HOLDER.

IMPORTANT: If the certificate holder is an ADDITIONAL INSURED, the policy(ies) must have ADDITIONAL INSURED provisions or be endorsed. If SUBROGATION IS WAIVED, subject to the terms and conditions of the policy, certain policies may require an endorsement. A statement on this certificate does not confer rights to the certificate holder in lieu of such endorsement(s).

PRODUCER License # 0757776 HUB International Insurance Services (SOW) 2905 Rodeo Park Drive East Building 6, Suite 100 Santa Fe, NM 87505	CONTACT NAME: PHONE (A/C, No, Ext): (505) 982-4296 FAX (A/C, No): (866) 621-0427 E-MAIL ADDRESS:
	INSURER(S) AFFORDING COVERAGE — NAIC #
	INSURER A : ACUITY, A Mutual Insurance Company — 14184
INSURED Sub Surface Contracting Inc 27A Paseo De River St Santa Fe, NM 87507	INSURER B : Builders Trust of New Mexico
	INSURER C :
	INSURER D :
	INSURER E :
	INSURER F :

COVERAGES **CERTIFICATE NUMBER:** **REVISION NUMBER:**

THIS IS TO CERTIFY THAT THE POLICIES OF INSURANCE LISTED BELOW HAVE BEEN ISSUED TO THE INSURED NAMED ABOVE FOR THE POLICY PERIOD INDICATED. NOTWITHSTANDING ANY REQUIREMENT, TERM OR CONDITION OF ANY CONTRACT OR OTHER DOCUMENT WITH RESPECT TO WHICH THIS CERTIFICATE MAY BE ISSUED OR MAY PERTAIN, THE INSURANCE AFFORDED BY THE POLICIES DESCRIBED HEREIN IS SUBJECT TO ALL THE TERMS, EXCLUSIONS AND CONDITIONS OF SUCH POLICIES. LIMITS SHOWN MAY HAVE BEEN REDUCED BY PAID CLAIMS.

INSR LTR	TYPE OF INSURANCE	ADDL INSD	SUBR WVD	POLICY NUMBER	POLICY EFF (MM/DD/YYYY)	POLICY EXP (MM/DD/YYYY)	LIMITS	
A	X COMMERCIAL GENERAL LIABILITY			Z75944	7/1/2022	7/1/2023	EACH OCCURRENCE	$ 1,000,000
	CLAIMS-MADE X OCCUR						DAMAGE TO RENTED PREMISES (Ea occurrence)	$ 250,000
	X PD Ded: $500						MED EXP (Any one person)	$ 10,000
	GEN'L AGGREGATE LIMIT APPLIES PER:						PERSONAL & ADV INJURY	$ 1,000,000
	POLICY X PRO-JECT LOC						GENERAL AGGREGATE	$ 3,000,000
	OTHER:						PRODUCTS - COMP/OP AGG	$ 3,000,000
								$
A	AUTOMOBILE LIABILITY			Z75944	7/1/2022	7/1/2023	COMBINED SINGLE LIMIT (Ea accident)	$ 1,000,000
	X ANY AUTO						BODILY INJURY (Per person)	$
	OWNED AUTOS ONLY / SCHEDULED AUTOS						BODILY INJURY (Per accident)	$
	X HIRED AUTOS ONLY / X NON-OWNED AUTOS ONLY						PROPERTY DAMAGE (Per accident)	$
								$
A	UMBRELLA LIAB X OCCUR			Z75944	7/1/2022	7/1/2023	EACH OCCURRENCE	$ 2,000,000
	X EXCESS LIAB CLAIMS-MADE						AGGREGATE	$ 2,000,000
	DED X RETENTION $ 0							$
B	WORKERS COMPENSATION AND EMPLOYERS' LIABILITY Y / N	N / A		0692	1/1/2023	1/1/2024	PER STATUTE / OTH-ER	
	ANY PROPRIETOR/PARTNER/EXECUTIVE OFFICER/MEMBER EXCLUDED? Y (Mandatory in NH)						E.L. EACH ACCIDENT	$ 2,000,000
	If yes, describe under DESCRIPTION OF OPERATIONS below						E.L. DISEASE - EA EMPLOYEE	$ 2,000,000
							E.L. DISEASE - POLICY LIMIT	$ 2,000,000
A	Leased/Rented Eqpt			Z75944	7/1/2022	7/1/2023	Ded: $500/Limit:	200,000

DESCRIPTION OF OPERATIONS / LOCATIONS / VEHICLES (ACORD 101, Additional Remarks Schedule, may be attached if more space is required)

CERTIFICATE HOLDER

City of Santa Fe
Public Utilities Department
801 West San Mateo
Santa Fe, NM 87505

CANCELLATION

SHOULD ANY OF THE ABOVE DESCRIBED POLICIES BE CANCELLED BEFORE THE EXPIRATION DATE THEREOF, NOTICE WILL BE DELIVERED IN ACCORDANCE WITH THE POLICY PROVISIONS.

AUTHORIZED REPRESENTATIVE

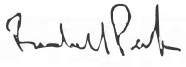

© 1988-2015 ACORD CORPORATION. All rights reserved.
The ACORD name and logo are registered marks of ACORD

CITY OF SANTA FE PROCUREMENT CHECKLIST

Contractor Name: Sub Surface Contracting, Inc.

Procurement Title: 21/43/B Priority Line Replacement Price Agreement, CIP # 3058

Procurement Method: State Price Agreement ☐ *Cooperative* ☐ *Sole Source* ☐ *Other* ☐ _____

Exempt ☐ *Request For Proposal* (RFP) ☒ *Invitation To Bid (ITB)* ☐ *Contract under 60K* ☐ *Contract over 60K* ☐

Department Requesting Bill Huey Water Division, PUD

Procurement Requirements:
A procurement file shall be maintained for all contracts, regardless of the method of procurement. The procurement file shall contain the basis on which the award is made, all submitted bids, all evaluation materials, score sheets, quotations and all other documentation related to or prepared in conjunction with evaluation, negotiation, and the award process. The procurement shall contain a written determination from the Requesting Department, signed by the purchasing officer, setting forth the reasoning for the contract award decision before submitting to the Committees. .

REQUIRED DOCUMENTS FOR APPROVAL BY PURCHASING*

YES	N/A	
☒	☐	Approved Procurement Checklist (by Purchasing)
☒	☐	Memo addressed to City Manager (under 60K) Committees/City Council (over 60K)
☐	☒	State Price Agreement
☐	☒	RFP
☐	☒	Evaluation Committee Report
☒	☐	ITB
☒	☐	Bib Tab
☐	☒	Quotes (3 valid current quotes)
☐	☒	Cooperative Agreement
☐	☒	Sole Source Request and Determination Form
☐	☒	Contractors Exempt Letter
☒	☐	Purchasing Officers approval for exempt procurement
☐	☒	BAR
☐	☒	FIR
☒	☐	Executed Contract, Agreement or Amendment
☒	☐	Current Business Registration and CRS numbers on contract or agreement
☒	☐	Summary of Contracts and Agreements form
☐	☒	Certificate of Insurance
☐	☐	All documentation presented to Committees
☐	☐	Other: _____

Public Utilities Dept / Water Division/Bill Huey (Bill Huey)	Engineer	
Department Rep Printed Name (attesting that all information included)	Title	Date
	Contracts Supervisor	Apr 5, 2023
Purchasing Officer (attesting that all information is reviewed)	Title	Date

Include all other substantive documents and records of communication that pertain to the procurement and any resulting contract.

*

City of Santa Fe, New Mexico

memo

Date: August 9, 2021

To: Public Works-Public Utilities Committee / Finance Committee

From: Michael R. Moya, T&D Section Manager MM
Bill Huey, Water Division Engineer Associate BH

Via: Jesse D. Roach, Water Division Director JR

RE: Request to award bid number '21/43/B for the FY 2022 Priority Line Replacement Price Agreement, CIP # 3058 to Sub Surface Contracting, Inc. and A.A.C. Construction, LLC.; Request approval of a Budget Adjustment Request/Budget increase in the amount of $3,500,000.

ITEM AND ISSUE:

The Water Division requests award of bid number '21/43/B for the FY 21/22 Priority Line Replacement Price Agreement, CIP # 3058 to Sub Surface Contracting, Inc. and A.A.C. Construction, LLC for the remainder of four (4) Fiscal Years, FY 2021-22 until FY2024-25. Initial funding of $3,500,000 inclusive NMGRT is requested for FY2021-22. Funding is broken down for each contractor as follows: $2,250,000.00 inclusive of NMGRT for Sub Surface and $1,250,000.00 inclusive of NMGRT for AAC. .Future funding will depend upon the availability of CIP funds.

BACKGROUND AND SUMMARY:

The Priority Line Replacement Price Agreement is an on-call requirements contract, with the Water Division issuing work orders as needed for work such as water line replacements. The contract is funded from CIP for Transmission and Distribution to work on their infrastructure. The initial Contract amount is limited to $3,500,000.00 inclusive of New Mexico Gross Receipt Tax (NMGRT).

This is was multi-contractor award ITB to set the applicable Bid Items for future work. The ITB was only used to select the winning Contractors. Future work will be assigned under fully signed Work Orders for planned work on will be followed with a signed Work Order for Emergency repair. The exact type of work required will be used to select from the applicable Bid Items. Not every Bit Item is anticipated to be used.

The initial contract period is Fiscal Years 2021-2025. The bids for this project were opened on June 17, 2021 and were subsequently evaluated for completeness and accuracy. The low bid in the amount of $892,448.25 plus NMGRT was submitted by Sub Surface Contracting, Inc. A second acceptable bid of $933,364.22 was submitted by A.A.C. Construction, LLC. The Water Division is planning on replacing pipe on multiple streets in the Apache, San Ildefonso, San Felipe, MaClovia, Isabel and Rosina neighborhood, as well as Bishops Lodge between Artist and Murales Roads, Lorenzo Road, Malaga

Lane, Pino Road, San Isabel Street, Sosaya Street, Camino Santander and Camino Santiago/Camino Matias.

A summary of the bids is provided below:

Bidders	Total Bid without NMGRT	Bid Including Veterans preference without NMGRT
Sub Surface Contracting, Inc.	$892,448.25	$821,052.39
A.A.C. Construction, LLC	$933,364.22	
TLC Plumbing & Utility	$1,158,308.40	
Blueline Construction, Inc.	$1,476,101.57	
Allied 360 Construction, LLC	$2,364,321.74	

CONTRACT NUMBER:
The FY22 Munis contract number:
Sub Surface Contracting # 3202929
A.A.C Construction # 3202927

FUNDING SOURCE:
The funding source is:
Water Enterprise Fund/ CIP
FY 2022
Fund Name/Number: Water Enterprise Fund/ 500
Munis Org Name/Number: Water CIP / 5050395
Munis Object Name/Number: WIP Construction / 572970

Funds for this work will be available in Business Unit, Line Item 5050395.572970 in the amount of $1,600,000.00 plus NMGRT upon approval of the BAR Budget Increase.

RECOMMENDATION:

The Water Division recommends:

- Review and approval of award of contracts to Sub Surface Contracting, Inc. and A.A.C Construction, LLC for the FY 21/22 Priority Line Replacement Price Agreement, CIP # 3058 under ITB No. '21/43/B for a total amount of $3,500,000.00 inclusive of NMGRT for FY2021-22.

- Approval of the BAR – Budget Increase in the amount of $3,500,000 from the Water Enterprise Fund cash balance into the Water CIP fund for FY 2022.

- Forwarding and recommendation of approval of award and contract to the Finance Committee for their consideration and approval to the Governing Body for their final consideration and approval.

SUBSURF-01 DONISCHUK

CERTIFICATE OF LIABILITY INSURANCE

DATE (MM/DD/YYYY) 5/20/2021

THIS CERTIFICATE IS ISSUED AS A MATTER OF INFORMATION ONLY AND CONFERS NO RIGHTS UPON THE CERTIFICATE HOLDER. THIS CERTIFICATE DOES NOT AFFIRMATIVELY OR NEGATIVELY AMEND, EXTEND OR ALTER THE COVERAGE AFFORDED BY THE POLICIES BELOW. THIS CERTIFICATE OF INSURANCE DOES NOT CONSTITUTE A CONTRACT BETWEEN THE ISSUING INSURER(S), AUTHORIZED REPRESENTATIVE OR PRODUCER, AND THE CERTIFICATE HOLDER.

IMPORTANT: If the certificate holder is an ADDITIONAL INSURED, the policy(ies) must have ADDITIONAL INSURED provisions or be endorsed. If SUBROGATION IS WAIVED, subject to the terms and conditions of the policy, certain policies may require an endorsement. A statement on this certificate does not confer rights to the certificate holder in lieu of such endorsement(s).

PRODUCER License # 0757776
HUB International Insurance Services (SOW)
2905 Rodeo Park Drive East
Building 6, Suite 100
Santa Fe, NM 87505

CONTACT NAME: Michelle Vialpando
PHONE (A/C, No, Ext): (505) 992-1873 FAX (A/C, No): (866) 621-0427
E-MAIL ADDRESS: michelle.vialpando@hubinternational.com

INSURER(S) AFFORDING COVERAGE	NAIC #
INSURER A : ACUITY, A Mutual Insurance Company	14184
INSURER B : Builders Trust of New Mexico	
INSURER C :	
INSURER D :	
INSURER E :	
INSURER F :	

INSURED
Sub Surface Contracting Inc
27A Paseo De River St
Santa Fe, NM 87507

COVERAGES **CERTIFICATE NUMBER:** **REVISION NUMBER:**

THIS IS TO CERTIFY THAT THE POLICIES OF INSURANCE LISTED BELOW HAVE BEEN ISSUED TO THE INSURED NAMED ABOVE FOR THE POLICY PERIOD INDICATED. NOTWITHSTANDING ANY REQUIREMENT, TERM OR CONDITION OF ANY CONTRACT OR OTHER DOCUMENT WITH RESPECT TO WHICH THIS CERTIFICATE MAY BE ISSUED OR MAY PERTAIN, THE INSURANCE AFFORDED BY THE POLICIES DESCRIBED HEREIN IS SUBJECT TO ALL THE TERMS, EXCLUSIONS AND CONDITIONS OF SUCH POLICIES. LIMITS SHOWN MAY HAVE BEEN REDUCED BY PAID CLAIMS.

INSR LTR	TYPE OF INSURANCE	ADDL INSD	SUBR WVD	POLICY NUMBER	POLICY EFF (MM/DD/YYYY)	POLICY EXP (MM/DD/YYYY)	LIMITS	
A	X COMMERCIAL GENERAL LIABILITY			Z75944	7/1/2020	7/1/2021	EACH OCCURRENCE	$ 1,000,000
	CLAIMS-MADE [X] OCCUR						DAMAGE TO RENTED PREMISES (Ea occurrence)	$ 250,000
	X PD Ded: $500						MED EXP (Any one person)	$ 10,000
							PERSONAL & ADV INJURY	$ 1,000,000
	GEN'L AGGREGATE LIMIT APPLIES PER:						GENERAL AGGREGATE	$ 3,000,000
	POLICY [X] PRO-JECT [ ] LOC						PRODUCTS - COMP/OP AGG	$ 3,000,000
	OTHER:							$
A	AUTOMOBILE LIABILITY			Z75944	7/1/2020	7/1/2021	COMBINED SINGLE LIMIT (Ea accident)	$ 1,000,000
	X ANY AUTO						BODILY INJURY (Per person)	$
	OWNED AUTOS ONLY [ ] SCHEDULED AUTOS						BODILY INJURY (Per accident)	$
	X HIRED AUTOS ONLY [X] NON-OWNED AUTOS ONLY						PROPERTY DAMAGE (Per accident)	$
								$
A	UMBRELLA LIAB [X] OCCUR			Z75944	7/1/2020	7/1/2021	EACH OCCURRENCE	$ 2,000,000
	X EXCESS LIAB CLAIMS-MADE						AGGREGATE	$ 2,000,000
	DED [X] RETENTION $ 0							$
B	WORKERS COMPENSATION AND EMPLOYERS' LIABILITY Y/N	N/A		0692	1/1/2021	1/1/2022	X PER STATUTE [ ] OTH-ER	
	ANY PROPRIETOR/PARTNER/EXECUTIVE OFFICER/MEMBER EXCLUDED? (Mandatory in NH) [Y]						E.L. EACH ACCIDENT	$ 2,000,000
	If yes, describe under DESCRIPTION OF OPERATIONS below						E.L. DISEASE - EA EMPLOYEE	$ 2,000,000
							E.L. DISEASE - POLICY LIMIT	$ 2,000,000
A	Leased/Rented Eqpt			Z75944	7/1/2020	7/1/2021	Ded: $500 / Limit	200,000

DESCRIPTION OF OPERATIONS / LOCATIONS / VEHICLES (ACORD 101, Additional Remarks Schedule, may be attached if more space is required)

CERTIFICATE HOLDER

City of Santa Fe
Public Utilities Department
801 West San Mateo
Santa Fe, NM 87505

CANCELLATION

SHOULD ANY OF THE ABOVE DESCRIBED POLICIES BE CANCELLED BEFORE THE EXPIRATION DATE THEREOF, NOTICE WILL BE DELIVERED IN ACCORDANCE WITH THE POLICY PROVISIONS.

AUTHORIZED REPRESENTATIVE

© 1988-2015 ACORD CORPORATION. All rights reserved.
The ACORD name and logo are registered marks of ACORD

SUBSURF-01 DONISCHUK

CERTIFICATE OF LIABILITY INSURANCE

DATE (MM/DD/YYYY) 5/20/2021

THIS CERTIFICATE IS ISSUED AS A MATTER OF INFORMATION ONLY AND CONFERS NO RIGHTS UPON THE CERTIFICATE HOLDER. THIS CERTIFICATE DOES NOT AFFIRMATIVELY OR NEGATIVELY AMEND, EXTEND OR ALTER THE COVERAGE AFFORDED BY THE POLICIES BELOW. THIS CERTIFICATE OF INSURANCE DOES NOT CONSTITUTE A CONTRACT BETWEEN THE ISSUING INSURER(S), AUTHORIZED REPRESENTATIVE OR PRODUCER, AND THE CERTIFICATE HOLDER.

IMPORTANT: If the certificate holder is an ADDITIONAL INSURED, the policy(ies) must have ADDITIONAL INSURED provisions or be endorsed. If SUBROGATION IS WAIVED, subject to the terms and conditions of the policy, certain policies may require an endorsement. A statement on this certificate does not confer rights to the certificate holder in lieu of such endorsement(s).

PRODUCER License # 0757776 HUB International Insurance Services (SOW) 2905 Rodeo Park Drive East Building 6, Suite 100 Santa Fe, NM 87505	CONTACT NAME: Michelle Vialpando PHONE (A/C, No, Ext): (505) 992-1873 FAX (A/C, No): (866) 621-0427 E-MAIL ADDRESS: michelle.vialpando@hubinternational.com
INSURED Sub Surface Contracting Inc 27A Paseo De River St Santa Fe, NM 87507	INSURER(S) AFFORDING COVERAGE — NAIC # INSURER A : ACUITY, A Mutual Insurance Company — 14184 INSURER B : Builders Trust of New Mexico INSURER C : INSURER D : INSURER E : INSURER F :

COVERAGES **CERTIFICATE NUMBER:** **REVISION NUMBER:**

THIS IS TO CERTIFY THAT THE POLICIES OF INSURANCE LISTED BELOW HAVE BEEN ISSUED TO THE INSURED NAMED ABOVE FOR THE POLICY PERIOD INDICATED. NOTWITHSTANDING ANY REQUIREMENT, TERM OR CONDITION OF ANY CONTRACT OR OTHER DOCUMENT WITH RESPECT TO WHICH THIS CERTIFICATE MAY BE ISSUED OR MAY PERTAIN, THE INSURANCE AFFORDED BY THE POLICIES DESCRIBED HEREIN IS SUBJECT TO ALL THE TERMS, EXCLUSIONS AND CONDITIONS OF SUCH POLICIES. LIMITS SHOWN MAY HAVE BEEN REDUCED BY PAID CLAIMS.

INSR LTR	TYPE OF INSURANCE	ADDL INSD	SUBR WVD	POLICY NUMBER	POLICY EFF (MM/DD/YYYY)	POLICY EXP (MM/DD/YYYY)	LIMITS	
A	X COMMERCIAL GENERAL LIABILITY CLAIMS-MADE X OCCUR X PD Ded: $500 GEN'L AGGREGATE LIMIT APPLIES PER: POLICY X PRO-JECT LOC OTHER:			Z75944	7/1/2021	7/1/2022	EACH OCCURRENCE DAMAGE TO RENTED PREMISES (Ea occurrence) MED EXP (Any one person) PERSONAL & ADV INJURY GENERAL AGGREGATE PRODUCTS - COMP/OP AGG	$ 1,000,000 $ 250,000 $ 10,000 $ 1,000,000 $ 3,000,000 $ 3,000,000
A	AUTOMOBILE LIABILITY X ANY AUTO OWNED AUTOS ONLY SCHEDULED AUTOS X HIRED AUTOS ONLY X NON-OWNED AUTOS ONLY			Z75944	7/1/2021	7/1/2022	COMBINED SINGLE LIMIT (Ea accident) BODILY INJURY (Per person) BODILY INJURY (Per accident) PROPERTY DAMAGE (Per accident)	$ 1,000,000 $ $ $
A	UMBRELLA LIAB X OCCUR X EXCESS LIAB CLAIMS-MADE DED X RETENTION $ 0			Z75944	7/1/2021	7/1/2022	EACH OCCURRENCE AGGREGATE	$ 2,000,000 $ 2,000,000
B	WORKERS COMPENSATION AND EMPLOYERS' LIABILITY ANY PROPRIETOR/PARTNER/EXECUTIVE OFFICER/MEMBER EXCLUDED? (Mandatory in NH) Y/N: Y If yes, describe under DESCRIPTION OF OPERATIONS below	N/A		0692	1/1/2021	1/1/2022	X PER STATUTE OTH-ER E.L. EACH ACCIDENT E.L. DISEASE - EA EMPLOYEE E.L. DISEASE - POLICY LIMIT	$ 2,000,000 $ 2,000,000 $ 2,000,000
A	Leased/Rented Eqpt			Z75944	7/1/2021	7/1/2022	Ded: $500 / Limit	200,000

DESCRIPTION OF OPERATIONS / LOCATIONS / VEHICLES (ACORD 101, Additional Remarks Schedule, may be attached if more space is required)

CERTIFICATE HOLDER

City of Santa Fe
Public Utilities Department
801 West San Mateo
Santa Fe, NM 87505

CANCELLATION

SHOULD ANY OF THE ABOVE DESCRIBED POLICIES BE CANCELLED BEFORE THE EXPIRATION DATE THEREOF, NOTICE WILL BE DELIVERED IN ACCORDANCE WITH THE POLICY PROVISIONS.

AUTHORIZED REPRESENTATIVE

© 1988-2015 ACORD CORPORATION. All rights reserved.
The ACORD name and logo are registered marks of ACORD

City of Santa Fe

Treasury Department
200 Lincoln Ave.
Santa Fe, New Mexico 87504-0909
505-955-6551

BUSINESS REGISTRATION

Business Name: SUB SURFACE CONTRACTING INC.
DBA: SUB SURFACE CONTRACTING INC.

Business Location: 27 PASEO DE RIVER A
SANTA FE , NM 87507

Owner: SUB SURFACE CONTRACTING INC.

License Number: 46991

Issued Date: April 01, 2021

Expiration Date: April 01, 2022

CRS Number: 02104256000

License Type: Business License - Renewable

Classification: Contractor - Specialty

Fees Paid: $35.00

SUB SURFACE CONTRACTING INC.
27 A PASEO DE RIVER
SANTA FE, NM 87507

THIS IS NOT A CONSTRUCTION PERMIT OR SIGN PERMIT. APPROPRIATE PERMITS MUST BE OBTAINED FROM THE CITY OF SANTA FE BUILDING PERMIT DIVISION PRIOR TO COMMENCEMENT OF ANY CONSTRUCTION OR THE INSTALLATION OF ANY EXTERIOR SIGN.

THIS REGISTRATION/LICENSE IS NOT TRANSFERRABLE TO OTHER BUSINESSES OR PREMISES.

TO BE POSTED IN A CONSPICUOUS PLACE

CITY OF SANTA FE PROCUREMENT CHECKLIST

Contractor Name: Sub Surface Contracting, Inc.

Procurement Title: 21/43/B Priority Line Replacement Price Agreement, CIP # 3058

Procurement Method: State Price Agreement ☐ *Cooperative* ☐ *Sole Source* ☐ *Other* ☐ _____

Exempt ☐ *Request For Proposal* (RFP) ☒ *Invitation To Bid (ITB)* ☐ *Contract under 60K* ☐ *Contract over 60K* ☐

Department Requesting Bill Huey Water Division, PUD

Procurement Requirements:
A procurement file shall be maintained for all contracts, regardless of the method of procurement. The procurement file shall contain the basis on which the award is made, all submitted bids, all evaluation materials, score sheets, quotations and all other documentation related to or prepared in conjunction with evaluation, negotiation, and the award process. The procurement shall contain a written determination from the Requesting Department, signed by the purchasing officer, setting forth the reasoning for the contract award decision before submitting to the Committees. .

REQUIRED DOCUMENTS FOR APPROVAL BY PURCHASING*

YES	N/A	
☒	☐	Approved Procurement Checklist (by Purchasing)
☒	☐	Memo addressed to City Manager (under 60K) Committees/City Council (over 60K)
☐	☒	State Price Agreement
☐	☒	RFP
☐	☒	Evaluation Committee Report
☒	☐	ITB
☒	☐	Bib Tab
☐	☒	Quotes (3 valid current quotes)
☐	☒	Cooperative Agreement
☐	☒	Sole Source Request and Determination Form
☐	☒	Contractors Exempt Letter
☒	☐	Purchasing Officers approval for exempt procurement
☐	☒	BAR
☐	☒	FIR
☒	☐	Executed Contract, Agreement or Amendment
☒	☐	Current Business Registration and CRS numbers on contract or agreement
☒	☐	Summary of Contracts and Agreements form
☐	☒	Certificate of Insurance
☐	☐	All documentation presented to Committees
☐	☐	Other: _____

Public Utilities Dept / Water Division/Bill Huey Bill Huey Engineer 8/17/21
Department Rep Printed Name (attesting that all information included) Title Date

Fran Dunaway (Aug 23, 2021 12:29 MDT) Chief Procurement Officer Aug 23, 2021
Purchasing Officer (attesting that all information is reviewed) Title Date

Include all other substantive documents and records of communication that pertain to the procurement and any resulting contract.

*

City of Santa Fe, New Mexico

memo

Date: August 9, 2021

To: Public Works-Public Utilities Committee / Finance Committee

From: Michael R. Moya, T&D Section Manager MM
Bill Huey, Water Division Engineer Associate BH

Via: Jesse D. Roach, Water Division Director JR

RE: Request to award bid number '21/43/B for the FY 2022 Priority Line Replacement Price Agreement, CIP # 3058 to Sub Surface Contracting, Inc. and A.A.C. Construction, LLC.; Request approval of a Budget Adjustment Request/Budget increase in the amount of $3,500,000.

ITEM AND ISSUE:

The Water Division requests award of bid number '21/43/B for the FY 21/22 Priority Line Replacement Price Agreement, CIP # 3058 to Sub Surface Contracting, Inc. and A.A.C. Construction, LLC for the remainder of four (4) Fiscal Years, FY 2021-22 until FY2024-25. Initial funding of $3,500,000 inclusive NMGRT is requested for FY2021-22. Funding is broken down for each contractor as follows: $2,250,000.00 inclusive of NMGRT for Sub Surface and $1,250,000.00 inclusive of NMGRT for AAC. .Future funding will depend upon the availability of CIP funds.

BACKGROUND AND SUMMARY:

The Priority Line Replacement Price Agreement is an on-call requirements contract, with the Water Division issuing work orders as needed for work such as water line replacements. The contract is funded from CIP for Transmission and Distribution to work on their infrastructure. The initial Contract amount is limited to $3,500,000.00 inclusive of New Mexico Gross Receipt Tax (NMGRT).

This is was multi-contractor award ITB to set the applicable Bid Items for future work. The ITB was only used to select the winning Contractors. Future work will be assigned under fully signed Work Orders for planned work on will be followed with a signed Work Order for Emergency repair. The exact type of work required will be used to select from the applicable Bid Items. Not every Bit Item is anticipated to be used.

The initial contract period is Fiscal Years 2021-2025. The bids for this project were opened on June 17, 2021 and were subsequently evaluated for completeness and accuracy. The low bid in the amount of $892,448.25 plus NMGRT was submitted by Sub Surface Contracting, Inc. A second acceptable bid of $933,364.22 was submitted by A.A.C. Construction, LLC. The Water Division is planning on replacing pipe on multiple streets in the Apache, San Ildefonso, San Felipe, MaClovia, Isabel and Rosina neighborhood, as well as Bishops Lodge between Artist and Murales Roads, Lorenzo Road, Malaga

Lane, Pino Road, San Isabel Street, Sosaya Street, Camino Santander and Camino Santiago/Camino Matias.

A summary of the bids is provided below:

Bidders	Total Bid without NMGRT	Bid Including Veterans preference without NMGRT
Sub Surface Contracting, Inc.	$892,448.25	$821,052.39
A.A.C. Construction, LLC	$933,364.22	
TLC Plumbing & Utility	$1,158,308.40	
Blueline Construction, Inc.	$1,476,101.57	
Allied 360 Construction, LLC	$2,364,321.74	

CONTRACT NUMBER:
The FY22 Munis contract number:
Sub Surface Contracting # 3202929
A.A.C Construction # 3202927

FUNDING SOURCE:
The funding source is:
Water Enterprise Fund/ CIP
FY 2022
Fund Name/Number: Water Enterprise Fund/ 500
Munis Org Name/Number: Water CIP / 5050395
Munis Object Name/Number: WIP Construction / 572970

Funds for this work will be available in Business Unit, Line Item 5050395.572970 in the amount of $1,600,000.00 plus NMGRT upon approval of the BAR Budget Increase.

RECOMMENDATION:

The Water Division recommends:

- Review and approval of award of contracts to Sub Surface Contracting, Inc. and A.A.C Construction, LLC for the FY 21/22 Priority Line Replacement Price Agreement, CIP # 3058 under ITB No. '21/43/B for a total amount of $3,500,000.00 inclusive of NMGRT for FY2021-22.

- Approval of the BAR – Budget Increase in the amount of $3,500,000 from the Water Enterprise Fund cash balance into the Water CIP fund for FY 2022.

- Forwarding and recommendation of approval of award and contract to the Finance Committee for their consideration and approval to the Governing Body for their final consideration and approval.

Log # {Finance use only}:	
Batch # {Finance use only}:	

City of Santa Fe, New Mexico
BUDGET AMENDMENT RESOLUTION (BAR)

DEPARTMENT / DIVISION NAME	DATE
PUD/Water/CIP	8/17/2021

ITEM DESCRIPTION	ORG	OBJECT	PROJECT	INCREASE	DECREASE
EXPENDITURES				{enter as positive #}	{enter as negative #}
Water CIP WIP Construction	5050395	572970	WTR1950535	3,500,000	
REVENUES				{enter as negative #}	{enter as positive #}
				$ 3,500,000	$ -

JUSTIFICATION: *(use additional page if needed)*
--Attach supporting documentation/memo

Budget Increase from Cash Balance in Water Enterprise Fund for Priority Line Replacement

Price Agreements Award of Bid 21/43/B to A.A.C Construction and Sub Surface for

FY 2022 CIP3058

{Complete section below if BAR results in a net change to ANY Fund}

Fund(s) Affected	Fund Balance Increase/(Decrease)
505	(3,500,000)
TOTAL:	**(3,500,000)**

Maya Martinez — 8/17/2021
Prepared By {print name} — Date

Division Director Signature {optional} — Date

Shannon Jones — 3/19/2021
Department Director Signature — Date

{Use this form for Finance Committee/ City Council agenda items ONLY}

CITY COUNCIL APPROVAL

City Council Approval Date:

Agenda Item #:

Andy Hopkins — 8/20/21
Andy Hopkins (Aug 20, 2021 11:52 MDT)
Budget Officer — Date

Finance Director {≤ $5,000} — Date

City Manager {≤ $60,000} — Date

Item#**21-0484**
Munis Contract# 3202929

CITY OF SANTA FE

PRIORITY LINE REPLACEMENTPRICE
AGREEMENT

CIP # 3058

THIS AGREEMENT is made and entered into by and between the City of Santa Fe, New Mexico, hereinafter referred to as the "City," and **SUB SURFACE CONTRACTING, INC.**, hereinafter referred to as the Contractor, and is effective as of the date set forth below upon which it is executed by the Parties.

IT IS AGREED BETWEEN THE PARTIES:

1. Scope of Work.

A. The Contractor shall perform the following work and as described is Exhibit "A" attached hereto:

1) The Contractor shall perform all the work required by Water Division as required in the Contract Documents for Priority Line Replacement Contract. The work consists of, but is not limited to furnishing all equipment, labor and materials for the construction and repair of water mains, valves, hydrants, metered water service lines and settings, pressure reducing valves, vaults, and other incidental work such as pavement removal and replacement, traffic control all as required to extend, replace or repair water distribution, water storage, and water supply infrastructure, in accordance with the drawings, specifications, and other Contract Documents. All water piping shall be new, poly-wrapped ductile iron, unless otherwise specified.

2) The Contractor shall be responsible for verifications of all measurements and dimensions for bidding on each subsequent Work Order.

3) The Contractor shall provide and keep at the work site a complete "as built" record set of drawings that shall be corrected daily and shall show every change from the original approved drawings and specifications. These changes shall be forwarded to City periodically. The drawings shall reflect exact and actual "as-built" conditions of construction, installation, and erection as it progresses. Where drawings are not adequate to show "as built" conditions. Contractor shall prepare sketches which delineate the necessary "asbuilt" information. City shall furnish two (2) sets of all paper "blue-line" print "approved" drawings for use in accomplishing specified mark up. Final "as built" drawings shall be delivered to City by Contractor upon completion of the work.

4) The Contractor shall be responsible for maintaining traffic control at the site in conformance with the Manual on Uniform Traffic Control Devices.

5) The Contractor shall be responsible for all permits, fees, and State and City inspections associated with the construction.

6) Incorporation by Reference. All exhibits, addenda, schedules of ITB 21/XX/B attached hereto and all certificates, work order documents, drawings, as-built and other instruments contemplated to be delivered hereunder are hereby expressly made a part of this Agreement as fully as though set forth herein, and all references to this Agreement herein orin any of such writings shall be deemed to refer to and include all of such writings. This Agreement contains the entire agreement between the parties with respect to the subject matter hereof and supersedes all prior agreements and understandings, both written and oral, among theparties with respect to the subject matter hereof. If there is any conflict between such exhibits or addenda and the terms of this Agreement, such exhibits or addenda shall control.

2. Compensation.

A. The City shall pay to the Contractor in full payment for services satisfactorily performed at total amount up to two million seventy four thousand nine hundred twenty seven and ninety five cents ($2,074,927.95). The New Mexico gross receipts tax levied on the amounts payable under this Agreement totaling one hundred seventy five thousand seventy two dollars and five cents ($175,072.05) shall be paid by the City to the Contractor as described in Exhibit A attached hereto. **The total amount payable to the Contractor under this Agreement, including gross receipts tax and expenses, shall not two million two million two hundred and fifty thousand dollars ($2,250,000). This amount is a maximum and not a guarantee that the work assigned to be performed by Contractor under this Agreement shall equal the amount stated herein. The parties do not intend for the Contractor to continue to provide services without compensation when the total compensation amount is reached. Contractor is responsible for notifying the City when the services provided under this Agreement reach the total compensation amount. In no event will the Contractor be paid for services provided in excess of the total compensation amount without this Agreement being amended in writing prior to those services in excess of the total compensation amount being provided.**

B. Payment is subject to availability of funds pursuant to the Appropriations Paragraph set forth below and to any negotiations between the parties from year to year pursuant to Paragraph 1, Scope of Work, and to approval by the City. All invoices MUST BE received by the City no later than thirty 30) days after the termination of the Fiscal Year in which the services were delivered. Invoices received after such date WILL NOT BE PAID.

C. Contractor must submit a detailed statement accounting for all services performed and expenses incurred. If the City finds that the services are not acceptable, within thirty days after the date of receipt of written notice from the Contractor that payment is requested, it shall provide the Contractor a letter of exception explaining the defect or objection to the services, and outlining steps the Contractor may take to provide remedial action. Upon certification by the City that the services have been received and accepted, payment shall be tendered to the Contractor within thirty days after the date of acceptance. If payment is made by mail, the payment shall be deemed tendered on the date it is postmarked. However, the City shall not incur late charges, interest, or penalties for failure to make payment within the time specified herein.

3. Term.

THIS AGREEMENT SHALL NOT BECOME EFFECTIVE UNTIL APPROVED BY THE CITY. This Agreement shall terminate on **June 30, 2025** unless terminated pursuant to paragraph 4 (Termination), or paragraph 5 (Appropriations). In accordance with Section 13-1-150 NMSA 1978, no contract term for a professional services contract, including extensions and renewals, shall exceed four years, except as set forth in Section 13-1-150 NMSA 1978.

4. Termination.

A. Termination. This Agreement may be terminated by either of the parties hereto upon written notice delivered to the other party at least thirty (30) days prior to the intended date of

termination. Except as otherwise allowed or provided under this Agreement, the City sole liability upon such termination shall be to pay for acceptable work performed prior to the Contractor's receipt of the notice of termination, if the City is the terminating party, or the Contractors receipt of the notice of termination, if the Contractor is the terminating party; provided, however, that a notice of termination shall not nullify or otherwise affect either party'sliability for pre-termination defaults under or breaches of this Agreement. The Contractor shall submit an invoice for such work within thirty (30) days of receiving or sending the notice of termination. Notwithstanding the foregoing, this Agreement may be terminated immediately upon written notice to the Contractor if the Contractor becomes unable to perform the services contracted for, as determined by the City or if, during the term of this Agreement, the Contractor or any of its officers, employees or agents is indicted for fraud, embezzlement or other crime dueto misuse of City funds or due to the Appropriations paragraph herein. *THIS PROVISION JS NOT EXCLUSIVE AND DOES NOT WAIVE THE OTHER LEGAL RIGHTS AND REMEDIES CAUSED BY THE CONTRACTOR'S DEFAULT/BREACH OF THIS AGREEMENT.*

B. Termination Management. Immediately upon receipt by either the City or the Contractor of notice of termination of this Agreement, the Contractor shall: 1) not incur any further obligations for salaries, services or any other expenditure of funds under this Agreement withoutwritten approval of the City; 2) comply with all directives issued by the City in the notice oftermination as to the performance of work under this Agreement; and 3) take such action as the City shall direct for the protection, preservation, retention or transfer of all property titled to theCity and records generated under this Agreement. Any non-expendable personal property orequipment provided to or purchased by the Contractor with contract funds shall become property of the City upon termination and shall be submitted to the City as soon as practicable.

5. Appropriations.

The terms of this Agreement are contingent upon sufficient appropriations and authorization being made by the City Council for the performance of this Agreement. If sufficient appropriations and authorization are not made by the City Council, this Agreement shall terminate immediately upon written notice being given by the City to the Contractor. The City's decision asto whether sufficient appropriations are available shall be accepted by the Contractor and shall be final. If the City proposes an amendment to the Agreement to unilaterally reduce funding, the Contractor shall have the option to terminate the Agreement or to agree to the reduced funding, within thirty (30) days of receipt of the proposed amendment.

6. Status of Contractor.

The Contractor and its agents and employees are independent contractors performing professional services for the City and are not employees of the City. The Contractor and its agents and employees shall not accrue leave, retirement, insurance, bonding, use of City vehicles, or anyother benefits afforded to employees of the City as a result of this Agreement. The Contractor acknowledges that all sums received hereunder are reportable by the Contractor for tax purposes, including without limitation, self-employment and business income tax. The Contractor agrees not to purport to bind the City unless the Contractor has express written authority to do so, and then only within the strict limits of that authority.

7. Construction Contract Performance and Payment Bond.

A. When a construction contract is awarded in excess of twenty-five thousand dollars ($25,000), the following bonds or security shall be delivered to the City and shall become binding on the parties upon the execution of the contract. If the Contractor fails to deliver the required performance and payment bonds, the Contractor's bid shall be rejected, its bid security shall be enforced to the extent of actual damages. Award of the contract shall be made pursuant to the

Procurement Code in the following manner:

(1) a performance bond satisfactory to the City, executed by a surety company authorized to do business in this state and said surety to be approved in federal circular 570 as published by the United States treasury department or the state board of finance or the local governing authority, in an amount equal to one hundred percent of the price specifiedin the contract; and

(2) a payment bond satisfactory to the City, executed by a surety company authorized to do business in this state and said surety to be approved in federal circular 570 as published by the United States treasury department or the state board of finance or the local governing authority, in an amount equal to one hundred percent of the price specifiedin the contract, for the protection of all persons supplying labor and material to the contractor or its subcontractors for the performance of the work provided for in the contract.

B. A subcontractor shall provide a performance and payment bond on a public works Building project if the subcontractor's contract for work to be performed on a project is one hundred twenty-five thousand dollars ($125,000) or more.

8. Assignment.

The Contractor shall not assign or transfer any interest in this Agreement or assign any claims for money due or to become due under this Agreement without the prior written approval of the City.

9. Subcontracting.

The Contractor shall not subcontract any portion of the services to be performed under this Agreement without the prior written approval of the City. No such subcontract shall relieve the primary Contractor from its obligations and liabilities under this Agreement, nor shall any subcontract obligate direct payment from the City.

10. Release.

Final payment of the amounts due under this Agreement shall operate as a release of the City, its officers and employees from all liabilities, claims and obligations whatsoever arising from or under this Agreement.

11. Confidentiality.

Any confidential information provided to or developed by the Contractor in the performance of this Agreement shall be kept confidential and shall not be made available to any individual or organization by the Contractor without the prior written approval of the City.

12. Product of Service -- Copyright.

All materials developed or acquired by the Contractor under this Agreement shall becomethe property of the City and shall be delivered to the City no later than the termination date of this Agreement. Nothing developed or produced, in whole or in part, by the Contractor under this Agreement shall be the subject of an application for copyright or other claim of ownership by or on behalf of the Contractor.

13. Conflict of Interest; Governmental Conduct Act.

A. The Contractor represents and warrants that it presently has no interest and, duringthe term of this Agreement, shall not acquire any interest, direct or indirect, which would conflictin any manner or degree with the performance or services required under the Agreement.

B. The Contractor further represents and warrants that it has complied with, and, during the term of this Agreement, will continue to comply with, and that this Agreement complies with all applicable provisions of the Governmental Conduct Act, Chapter 10, Article 16 NMSA 1978.

C. Contractor's representations and warranties in Paragraphs A and B of this Article 13 are material representations of fact upon which the City relied when this Agreement was enteredinto by the parties. Contractor shall provide immediate written notice to the City if, at any timeduring the term of this Agreement, Contractor learns that Contractor's representations and warranties in Paragraphs A and B of this Article 13 were erroneous on the effective date of this Agreement or have become erroneous by reason of new or changed circumstances. If it is laterdetermined that Contractor's representations and warranties in Paragraphs A and B of this Article 13 were erroneous on the effective date of this Agreement or have become erroneous by reason ofnew or changed circumstances, in addition to other remedies available to the City and notwithstanding anything in the Agreement to the contrary, the City may immediately terminate the Agreement.

D. All terms defined in the Governmental Conduct Act have the same meaning in thissection.

14. Amendment.

A. This Agreement shall not be altered, changed or amended except by instrument in writing executed by the parties hereto and all other required signatories.

B. If the City proposes an amendment to the Agreement to unilaterally reduce funding due to budget or other considerations, the Contractor shall, within thirty (30) days of receipt of the proposed Amendment, have the option to terminate the Agreement, pursuant to the termination provisions as set forth in Article 4 herein, or to agree to the reduced funding.

15. Change Orders.

A. Changes. The Contractor may only make changes or revisions within the Scope of Work as defined by Article 1 and/or Exhibit 1 after receipt of written approval by the City Manager or his/her designee. Such change may only be made to Tasks or Sub-Task as defined in the Scope of Work. Under no circumstance shall such change affect the:

1) Deliverable requirements, as outlined in the Scope of Work;
2) Due date of any Deliverable, as outlined in the Scope of Work;
3) Compensation of any Deliverable, as outlined in the Scope of Work;
4) Agreement compensation, as outlined in Article 2; or
5) Agreement termination, as outlined in Article 4.

B. Change Request Process. In the event that circumstances warrant a change to accomplish the Scope of Work as described above, a Change Request shall be submitted that meets the following criteria:

1) The Project Manager shall draft a written Change Request for review and approval by the City Manager to include:
   (a) the name of the person requesting the change;
   (b) a summary of the required change;
   (c) the start date for the change;
   (d) the reason and necessity for change;
   (e) the elements to be altered; and

(f) The impact of the change.

2) The City Manager shall provide a written decision on the Change Request to the Contractor within a maximum of ten (10) Business Days of receipt of the Change Request. All decisions made by the City Manager are final. Change Requests, once approved, become a part of the Agreement and become binding as a part of the original Agreement.

16. Merger.

This Agreement incorporates all the Agreements, covenants and understandings between the parties hereto concerning the subject matter hereof, and all such covenants, Agreements and understandings have been merged into this written Agreement. No prior Agreement or understanding, oral or otherwise, of the parties or their agents shall be valid or enforceable unless embodied in this Agreement.

17. Penalties for violation of law.

The Procurement Code, Sections 13-1-28 through 13-1-199, NMSA 1978, imposes civil and criminal penalties for its violation. In addition, the New Mexico criminal statutes imposefelony penalties for illegal bribes, gratuities and kickbacks.

18. Equal Opportunity Compliance.

The Contractor agrees to abide by all federal and state laws and rules and regulations, andSanta Fe City Code, pertaining to equal employment opportunity. In accordance with all such laws of the State of New Mexico, the Contractor assures that no person in the United States shall, on the grounds of race, religion, color, national origin, ancestry, sex, age, physical or mental handicap, or serious medical condition, spousal affiliation, sexual orientation or gender identity, be excluded from employment with or participation in, be denied the benefits of, or be otherwise subjected to discrimination under any program or activity performed under this Agreement. If Contractor is found not to be in compliance with these requirements during the life of this Agreement, Contractor agrees to take appropriate steps to correct these deficiencies.

19. Applicable Law.

The laws of the State of New Mexico shall govern this Agreement, without giving effect to its choice of law provisions. Venue shall be proper only in a New Mexico court of competent jurisdiction in accordance with Section 38-3-1 (G) NMSA 1978. By execution of this Agreement, Contractor acknowledges and agrees to the jurisdiction of the courts of the State of New Mexicoover any and all lawsuits arising under or out of any term of this Agreement.

20. Workers Compensation.

The Contractor agrees to comply with state laws and rules applicable to workers compensation benefits for its employees. If the Contractor fails to comply with the Workers Compensation Act and applicable rules when required to do so, this Agreement may be terminated by the City.

21. Professional Liability Insurance. Contractor shall maintain professional liability insurance throughout the term of this Agreement providing a minimum coverage in the amount required under the New Mexico Tort Claims Act. The Contractor shall furnish the City with proofof insurance of Contractor's compliance with the provisions of this section as a condition prior toperforming services under this Agreement.

22. Other Insurance

If the Services contemplated under this Agreement will be performed on or in City facilitiesor property, Contractor shall maintain in force during the entire term of this Agreement, the following insurance coverage(s), naming the City as additional insured,

A. Commercial General Liability insurance shall be written on an occurrence basis and be a broad as ISO Form CG 00 01 with limits not less than $2,000,000 per occurrence and #2,000,000 in the aggregate for claims against bodily injury, personal and advertising injury, and property damage. Said policy shall include broad from Contractual Liability coverage and be endorsed to name the City of Santa Fe, their officials, officers, employees and agents as additionalinsureds.

B. Business Automobile Liability insurance for all owned, non-owned automobiles,with a combined single limit not less than $1,000,000 per accident.

C. Broader Coverage and Limits. The insurance requirements under this Agreement shall be the greater of (1) the minimum coverage and limits specified in this Agreement, or (2) the broader coverage and maximum limits of coverage of any insurance policy or proceeds available tothe Named Insured. It is agreed that these insurance requirements shall not in any way act to reduce coverage that is broader or that includes higher limits than the minimums required herein. No representation is made that minimum insurance requirements of this Agreement are sufficient to cover the obligations of Contractor hereunder.

D. Contractor shall maintain the above insurance for the term of this Agreement and name the City as an additional insured and provide for 30 days cancellation notice on any Certificate of Insurance form furnished by Contractor. Such certificate shall also specifically state the coverage provided under the policy is primary over any other valid and collectible insurance and provide a waiver of subrogation.

23. Records and Financial Audit.

The Contractor shall maintain detailed time and expenditure records that indicate the date; time, nature and cost of services rendered during the Agreement's term and effect and retain them for a period of three (3) years from the date of final payment under this Agreement. The records shall be subject to inspection by the City. The City shall have the right to audit bi11ings both before and after payment. Payment under this Agreement shall not foreclose the right of the City to recover excessive or illegal payments.

24. Indemnification.

The Contractor shall defend, indemnify and hold harmless the City from all actions, proceeding, claims, demands, costs, damages, attorney's fees and all other liabilities and expenses of any kind from any source which may arise out of the performance of this Agreement, caused by the negligent act or failure to act of the Contractor, its officers, employees, servants, subcontractors or agents, or if caused by the actions of any client of the Contractor resulting in injury or damageto persons or property during the time when the Contractor or any officer, agent, employee, servantor subcontractor thereof has or is performing services pursuant to this Agreement. In the event that any action, suit or proceeding related to the services performed by the Contractor or any officer, agent, employee, servant or subcontractor under this Agreement is brought against the Contractor,the Contractor shall, as soon as practicable but no later than two (2) days after it receives notice thereof, notify the legal counsel of the City.

25. New Mexico Tort Claims Act

Any liability incurred by the City of Santa Fe in connection with this Agreement is subjectto the immunities and limitations of the New Mexico Tort Claims Act, Section 41-4-1, et. seq.NMSA 1978, as

amended. The city and its "public employees" as defined in the New Mexico Tort Claims Act, do not waive sovereign immunity, do not waive any defense and do not waive anylimitation of liability pursuant to law. No provision in this Agreement modifies or waives any provision of the New Mexico Tort Claims Act.

26. Invalid Term or Condition.

If any term or condition of this Agreement shall be held invalid or unenforceable, the remainder of this Agreement shall not be affected and shall be valid and enforceable.

27. Enforcement of Agreement.

A party's failure to require strict performance of any provision of this Agreement shall notwaive or diminish that party's right thereafter to demand strict compliance with that or any other provision. No waiver by a party of any of its rights under this Agreement shall be effective unlessexpress and in writing, and no effective waiver by a party of any of its rights shall be effective to waive any other rights.

28. Notices.

Any notice required to be given to either party by this Agreement shall be in writing andshall be delivered in person, by courier service or by U.S. mail, either first class or certified, return receipt requested, postage prepaid, as follows:

To the City:
Water Division Director
801 W. San Mateo
Santa Fe, NM 87505

To the Contractor:
Sub Surface Contracting Inc.
27 A Paseo de River
Santa Fe, NM 87507

29. Authority.

If Contractor is other than a natural person, the individual(s) signing this Agreement on behalf of Contractor represents and warrants that he or she has the power and authority to bindContractor, and that no further action, resolution, or approval from Contractor is necessary to enterinto a binding contract.

IN WITNESS WHEREOF, the Parties have executed this Agreement as of the date of the signatureby the required approval authorities below.

CITY OF SANTA FE:

ALAN WEBBER, MAYOR

DATE: Sep 10, 2021

CONTRACTOR:

Neal Keiper
Neal Keiper (Aug 19, 2021 13:26 MDT)
NAME

President
TITLE

DATE: Aug 19, 2021

CRS# 02104256000
Registration # 46991

ATTEST:

Kristine Mihelcic
Kristine Mihelcic (Sep 15, 2021 12:12 MDT)

KRISTINE BUSTOS MIHELCIC, CITY CLERK
GB MTG 09/08/2021

CITY ATTORNEY'S OFFICE:

Marcos Martinez
Marcos Martinez (Aug 19, 2021 10:05 MDT)

SENIOR ASSISTANT CITY ATTORNEY

APPROVED FOR FINANCES:

Mary McCoy

MARY MCCOY, FINANCE DIRECTOR

5050395.572970
Org. Name/Org#

AJH
AJH

				AAC		Sub Surface	
Bid Item	Approx. QTY.	Unit	Article and Description	Unit Price	Item Price	Unit Price	Item Price
5	35	LF	2" PVC Water Main, cip, all lengths	$ 32.50	$ 1,137.50	$ 30.00	$ 1,050.00
10	35	LF	4" PVC Water Main, cip, <100'	$ 38.00	$ 1,330.00	$ 36.00	$ 1,260.00
15	100	LF	4" PVC Water Main, cip, >100'	$ 36.00	$ 3,600.00	$ 34.00	$ 3,400.00
20	50	LF	6" PVC Water Main, cip, <100'	$ 43.50	$ 2,175.00	$ 42.00	$ 2,100.00
25	150	LF	6" PVC Water Main, cip, >100'	$ 40.50	$ 6,075.00	$ 39.00	$ 5,850.00
30	75	LF	8" PVC Water Main, cip, <100'	$ 49.00	$ 3,675.00	$ 48.00	$ 3,600.00
35	200	LF	8" PVC Water Main, cip, >100'	$ 46.75	$ 9,350.00	$ 45.50	$ 9,100.00
40	35	LF	10" PVC Water Main, cip, <100'	$ 56.00	$ 1,960.00	$ 52.00	$ 1,820.00
45	100	LF	10" PVC Water Main, cip, >100'	$ 52.00	$ 5,200.00	$ 49.00	$ 4,900.00
50	50	LF	12" PVC Water Main, cip, <100'	$ 69.37	$ 3,468.50	$ 66.75	$ 3,337.50
55	150	LF	12" PVC Water Main, cip, >100'	$ 66.25	$ 9,937.50	$ 64.50	$ 9,675.00
60	50	LF	14" PVC Water Main, cip	$ 87.00	$ 4,350.00	$ 79.00	$ 3,950.00
65	50	LF	16" PVC Water Main, cip	$ 103.50	$ 5,175.00	$ 97.00	$ 4,850.00
70	50	LF	24" PVC Water Main, cip	$ 167.50	$ 8,375.00	$ 100.00	$ 5,000.00
75	35	LF	2" DI Water Main, cip, all lengths	$ 42.00	$ 1,470.00	$ -	$ -
80	50	LF	4" DI Water Main, cip, <100'	$ 63.75	$ 3,187.50	$ 57.50	$ 2,875.00
85	100	LF	4" DI Water Main, cip, >100'	$ 56.50	$ 5,650.00	$ 56.00	$ 5,600.00
90	75	LF	6" DI Water Main, cip, <100'	$ 63.50	$ 4,762.50	$ 53.00	$ 3,975.00
95	250	LF	6" DI Water Main, cip, >100'	$ 56.50	$ 14,125.00	$ 51.00	$ 12,750.00
100	75	LF	8" DI Water Main, cip, <100'	$ 68.00	$ 5,100.00	$ 60.25	$ 4,518.75
105	250	LF	8" DI Water Main, cip, >100'	$ 73.00	$ 18,250.00	$ 58.00	$ 14,500.00
110	35	LF	10" DI Water Main, cip, <100'	$ 77.00	$ 2,695.00	$ 65.00	$ 2,275.00
115	100	LF	10" DI Water Main, cip, >100'	$ 74.00	$ 7,400.00	$ 63.00	$ 6,300.00
120	50	LF	12" DI Water Main, cip, <100'	$ 99.00	$ 4,950.00	$ 78.00	$ 3,900.00
125	100	LF	12" DI Water Main, cip, >100'	$ 89.50	$ 8,950.00	$ 74.00	$ 7,400.00
130	50	LF	14" DI Water Main, cip	$ 115.50	$ 5,775.00	$ 87.00	$ 4,350.00
135	50	LF	16" DI Water Main, cip	$ 139.50	$ 6,975.00	$ 101.00	$ 5,050.00
140	50	LF	24" DI Water Main, cip	$ 207.00	$ 10,350.00	$ 159.00	$ 7,950.00
145	75	LF	Extra Pay for Trench Depth, 6'-8'	$ 41.00	$ 3,075.00	$ 8.00	$ 600.00
150	50	LF	Extra Pay for Trench Depth, 8'-10'	$ 98.00	$ 4,900.00	$ 12.00	$ 600.00
155	25	LF	Extra Pay for Trench Depth, 10'-14'	$ 154.00	$ 3,850.00	$ 30.00	$ 750.00
160	20	CY	Rock Excavation	$ 325.00	$ 6,500.00	$ 220.00	$ 4,400.00
165	300	CY	Exploratory Excavation (as SDCW Approved)	$ 50.00	$ 15,000.00	$ 65.00	$ 19,500.00
170	75	CY	Imported Backfill (as SDCW Approved)	$ 36.00	$ 2,700.00	$ 24.00	$ 1,800.00
175	1,000	LB	Fitting Installation	$ 4.50	$ 4,500.00	$ 4.00	$ 4,000.00
180	500	LB	Fitting Insertion	$ 26.00	$ 13,000.00	$ 34.00	$ 17,000.00
185	25	EA	4" Retainer Ring/ Bolt on Flange	$ 60.00	$ 1,500.00	$ 65.00	$ 1,625.00
190	50	EA	6" Retainer Ring/ Bolt on Flange	$ 86.50	$ 4,325.00	$ 105.00	$ 5,250.00
195	50	EA	8" Retainer Ring/ Bolt on Flange	$ 98.50	$ 4,925.00	$ 119.00	$ 5,950.00
200	20	EA	10" Retainer Ring/ Bolt on Flange	$ 123.00	$ 2,460.00	$ 121.00	$ 2,420.00
205	20	EA	12" Retainer Ring/ Bolt on Flange	$ 147.50	$ 2,950.00	$ 145.00	$ 2,900.00
210	20	EA	14" Retainer Ring/ Bolt on Flange	$ 184.50	$ 3,690.00	$ 179.00	$ 3,580.00
215	10	EA	16" Retainer Ring/ Bolt on Flange	$ 275.00	$ 2,750.00	$ 250.00	$ 2,500.00
220	25	EA	4"Joint Harness	$ 70.50	$ 1,762.50	$ 40.00	$ 1,000.00
225	50	EA	6" Joint Harness	$ 95.00	$ 4,750.00	$ 110.00	$ 5,500.00
230	50	EA	8" Joint Harness	$ 125.00	$ 6,250.00	$ 120.00	$ 6,000.00
235	20	EA	10" Joint Harness	$ 160.00	$ 3,200.00	$ 160.00	$ 3,200.00
240	20	EA	12" Joint Harness	$ 192.50	$ 3,850.00	$ 180.00	$ 3,600.00
245	20	EA	14" Joint Harness	$ 370.00	$ 7,400.00	$ 375.00	$ 7,500.00
250	10	EA	16" Joint Harness	$ 427.50	$ 4,275.00	$ 410.00	$ 4,100.00
255	10	CY	Concrete Thrust Blocking (as SDCW Approved)	$ 315.00	$ 3,150.00	$ 250.00	$ 2,500.00
260	2	EA	Tapping Sleeve w/ Tap, 4" X 4"	$ 1,350.00	$ 2,700.00	$ 1,350.00	$ 2,700.00
265	4	EA	Tapping Sleeve w/ Tap, 6" X 4" - 6"	$ 1,567.50	$ 6,270.00	$ 1,500.00	$ 6,000.00
270	4	EA	Tapping Sleeve w/ Tap, 8" X 4" - 8"	$ 1,900.00	$ 7,600.00	$ 1,800.00	$ 7,200.00

				AAC		Sub Surface	
Bid Item	Approx. QTY.	Unit	Article and Description	Unit Price	Item Price	Unit Price	Item Price
275	2	EA	Tapping Sleeve w/ Tap, 10" X 4" - 10"	$ 2,250.00	$ 4,500.00	$ 2,100.00	$ 4,200.00
280	4	EA	Tapping Sleeve w/ Tap, 12" X 4" - 12"	$ 2,650.00	$ 10,600.00	$ 2,300.00	$ 9,200.00
285	1	EA	Tapping Sleeve w/Tap, 20" X 4" - 20"	$ 4,747.50	$ 4,747.50	$ 4,200.00	$ 4,200.00
290	1	EA	Non-Pressurized Connections, 2" line	$ 1,650.00	$ 1,650.00	$ 1,500.00	$ 1,500.00
295	1	EA	Non-Pressurized Connections, 4"-10" line	$ 3,587.50	$ 3,587.50	$ 3,100.00	$ 3,100.00
300	1	EA	Non-Pressurized Connections, 12"-20" line	$ 6,050.00	$ 6,050.00	$ 4,100.00	$ 4,100.00
305	2	EA	2" CL125 Gate Valves, cip.	$ 807.50	$ 1,615.00	$ 850.00	$ 1,700.00
310	2	EA	4" CL125 Gate Valves, cip.	$ 925.00	$ 1,850.00	$ 1,200.00	$ 2,400.00
315	5	EA	6" CL125 Gate Valves, cip.	$ 1,200.00	$ 6,000.00	$ 1,525.00	$ 7,625.00
320	5	EA	8" CL125 Gate Valves, cip.	$ 1,650.00	$ 8,250.00	$ 1,725.00	$ 8,625.00
325	1	EA	10" CL125 Gate Valves, cip.	$ 2,315.00	$ 2,315.00	$ 2,325.00	$ 2,325.00
330	2	EA	12" CL125 Gate Valves, cip.	$ 2,900.00	$ 5,800.00	$ 2,800.00	$ 5,600.00
335	1	EA	2" CL250 Gate Valves, cip.	$ 792.50	$ 792.50	$ 700.00	$ 700.00
340	1	EA	4" CL250 Gate Valves, cip.	$ 1,837.50	$ 1,837.50	$ 1,800.00	$ 1,800.00
345	10	EA	6" CL250 Gate Valves, cip.	$ 1,950.00	$ 19,500.00	$ 1,825.00	$ 18,250.00
350	3	EA	8" CL250 Gate Valves, cip.	$ 2,475.00	$ 7,425.00	$ 2,000.00	$ 6,000.00
355	1	EA	10" CL250 Gate Valves, cip.	$ 4,000.00	$ 4,000.00	$ 3,700.00	$ 3,700.00
360	1	EA	12" CL250 Gate Valves, cip.	$ 4,552.50	$ 4,552.50	$ 4,200.00	$ 4,200.00
365	1	EA	16" CL250 Gate Valves, cip.	$ 7,025.00	$ 7,025.00	$ 6,500.00	$ 6,500.00
370	1	EA	20" CL250 Gate Valves, cip.	$ 16,755.00	$ 16,755.00	$ 16,190.00	$ 16,190.00
375	1	EA	24" CL250 Gate Valves, cip.	$ 23,750.00	$ 23,750.00	$ 23,250.00	$ 23,250.00
380	1	EA	12" CL250 Butterfly Valves, cip.	$ 2,800.00	$ 2,800.00	$ 2,800.00	$ 2,800.00
385	1	EA	16" CL250 Butterfly Valves, cip.	$ 4,975.00	$ 4,975.00	$ 4,850.00	$ 4,850.00
390	1	EA	20" CL250 Butterfly Valves, cip.	$ 7,680.00	$ 7,680.00	$ 6,600.00	$ 6,600.00
395	1	EA	24" CL250 Butterfly Valves, cip.	$ 10,042.50	$ 10,042.50	$ 9,125.00	$ 9,125.00
400	5	EA	Fire Hydrant, 5' or less bury, cip.	$ 2,987.50	$ 14,937.50	$ 3,200.00	$ 16,000.00
405	2	EA	Fire Hydrant Extension, 6" or 12" length	$ 767.50	$ 1,535.00	$ 700.00	$ 1,400.00
410	1	EA	Fire Hydrant Extension, 18" or 24" length	$ 1,017.50	$ 1,017.50	$ 920.00	$ 920.00
415	1	EA	Fire Hydrant Remove & Relay	$ 1,350.00	$ 1,350.00	$ 700.00	$ 700.00
420	1	EA	Fire Hydrant Remove & Return	$ 887.50	$ 887.50	$ 575.00	$ 575.00
425	1	EA	2 1/4" Flush Hydrant	$ 1,657.50	$ 1,657.50	$ 1,500.00	$ 1,500.00
430	1	EA	2" Blow-Off Valve Installation	$ 1,420.00	$ 1,420.00	$ 1,300.00	$ 1,300.00
435	1	EA	2" Pressure Relief Valve, cip.	$ 6,780.00	$ 6,780.00	$ 6,725.00	$ 6,725.00
440	1	EA	3" Pressure Relief Valve, cip.	$ 7,065.50	$ 7,065.50	$ 6,950.00	$ 6,950.00
445	1	EA	4" Pressure Relief Valve, cip.	$ 8,432.50	$ 8,432.50	$ 8,195.00	$ 8,195.00
450	1	EA	6" Pressure Relief Valve, cip.	$ 11,091.50	$ 11,091.50	$ 10,800.00	$ 10,800.00
455	1	EA	8" Pressure Relief Valve, cip.	$ 15,362.50	$ 15,362.50	$ 14,925.00	$ 14,925.00
460	1	EA	12" Pressure Relief Valve, cip.	$ 29,837.50	$ 29,837.50	$ 29,500.00	$ 29,500.00
465	1	EA	Air & Vacuum Release Valve, 1"	$ 2,970.00	$ 2,970.00	$ 2,750.00	$ 2,750.00
470	1	EA	Air & Vacuum Release Valve, 2"	$ 4,245.00	$ 4,245.00	$ 3,940.00	$ 3,940.00
475	1	EA	Install City of Santa Fe Furnished Valve/Meter, 2" - 4"	$ 825.00	$ 825.00	$ 450.00	$ 450.00
480	1	EA	Install City of Santa Fe Furnished Valve/Meter, 6" - 8"	$ 1,025.00	$ 1,025.00	$ 550.00	$ 550.00
485	1	EA	Install City of Santa Fe Furnished Valve/Meter, 10"-12"	$ 1,275.00	$ 1,275.00	$ 750.00	$ 750.00
490	1	EA	Metered 2" Bypass – Vault Installation	$ 4,000.00	$ 4,000.00	$ 3,185.00	$ 3,185.00
495	20	EA	Valve Box, cip.	$ 575.00	$ 11,500.00	$ 625.00	$ 12,500.00
500	5	EA	Valve Box Replacement	$ 750.00	$ 3,750.00	$ 775.00	$ 3,875.00
505	5	EA	Valve Box Removal of Existing	$ 425.00	$ 2,125.00	$ 325.00	$ 1,625.00
510	3	EA	Valve Box Adjustment	$ 600.00	$ 1,800.00	$ 550.00	$ 1,650.00
515	1	EA	Valve Stem Extension, 0'-4' Depth	$ 200.00	$ 200.00	$ 250.00	$ 250.00
520	4	VF	Precast 4' Diameter Pit w/ Lid Min. 4' Depth	$ 925.00	$ 3,700.00	$ 825.00	$ 3,300.00
525	8	VF	Precast 6' Diameter Pit w/ Lid Min. 4' Depth	$ 1,000.00	$ 8,000.00	$ 1,050.00	$ 8,400.00
530	8	VF	Precast 8' Diameter Pit w/ Lid Min. 4' Depth	$ 1,500.00	$ 12,000.00	$ 1,075.00	$ 8,600.00
535	7	CY	Cast-In-Place RCP Vault w/ Lid	$ 1,000.00	$ 7,000.00	$ 1,025.00	$ 7,175.00
540	1	EA	Prefabricated Vault, 4' X 8'	$ 8,900.00	$ 8,900.00	$ 8,995.00	$ 8,995.00

				AAC		Sub Surface	
Bid Item	**Approx. QTY.**	**Unit**	**Article and Description**	**Unit Price**	Item Price	**Unit Price**	Item Price
545	1	ACRE	Native Seeding	**$ 2,600.00**	$ 2,600.00	**$ 2,275.00**	$ 2,275.00
550	1	EA	Bollards (pair)	**$ 1,180.00**	$ 1,180.00	**$ 975.00**	$ 975.00
555	18	LF	4" Steel Casing	**$ 31.37**	$ 564.66	**$ 95.00**	$ 1,710.00
560	18	LF	4" PVC Casing	**$ 15.40**	$ 277.20	**$ 75.00**	$ 1,350.00
565	18	LF	14" Steel Casing	**$ 107.43**	$ 1,933.74	**$ 175.00**	$ 3,150.00
570	18	LF	16" Steel Casing	**$ 124.02**	$ 2,232.36	**$ 200.00**	$ 3,600.00
575	18	LF	18" Steel Casing	**$ 144.03**	$ 2,592.54	**$ 275.00**	$ 4,950.00
580	18	LF	22" Steel Casing	**$ 234.94**	$ 4,228.92	**$ 300.00**	$ 5,400.00
585	18	LF	26" Steel Casing	**$ 290.67**	$ 5,232.06	**$ 400.00**	$ 7,200.00
590	18	LF	28" Steel Casing	**$ 187.04**	$ 3,366.72	**$ 450.00**	$ 8,100.00
595	18	LF	30" Steel Casing	**$ 187.04**	$ 3,366.72	**$ 450.00**	$ 8,100.00
600	18	LF	36" Steel Casing	**$ 287.03**	$ 5,166.54	**$ 500.00**	$ 9,000.00
605	50	DIA-IN- LF	Bore & Jack Casing Pipe	**$ 575.00**	$ 28,750.00	**$ 40.00**	$ 2,000.00
610	18	LF	Open Cut Casing Pipe Installation, < 6' Deep	**$ 62.00**	$ 1,116.00	**$ 39.00**	$ 702.00
615	25	SY	Asphalt Pavement Removal & Disposal, <2”	**$ 29.50**	$ 737.50	**$ 65.00**	$ 1,625.00
620	200	SY	Asphalt Pavement Removal & Disposal, 2”-6”	**$ 17.70**	$ 3,540.00	**$ 65.00**	$ 13,000.00
625	10	SY	Concrete Pavement Removal & Disposal, <2”	**$ 97.50**	$ 975.00	**$ 90.00**	$ 900.00
630	10	SY	Concrete Pavement Removal & Disposal, 2”-6”	**$ 132.50**	$ 1,325.00	**$ 95.00**	$ 950.00
635	50	LF	Concrete Curb and Gutter Removal & Disposal	**$ 12.00**	$ 600.00	**$ 25.00**	$ 1,250.00
640	10	SY	Concrete Sidewalk Removal & Disposal	**$ 65.00**	$ 650.00	**$ 30.00**	$ 300.00
645	50	SY	Replace City Street Pavement w/o Laydown Machine, Virgin Asphalt	**$ 74.50**	$ 3,725.00	**$ 75.00**	$ 3,750.00
650	50	SY	Replace City Street Pavement w/o Laydown Machine, Recycled Asphalt	**$ 74.50**	$ 3,725.00	**$ 75.00**	$ 3,750.00
655	50	SY	Replace City Street Pavement with Laydown Machine, Virgin Asphalt	**$ 72.00**	$ 3,600.00	**$ 75.00**	$ 3,750.00
660	10	SY	Replace City Street Pavement with Laydown Machine, Recycled Asphalt	**$ 84.96**	$ 849.60	**$ 75.00**	$ 750.00
665	10	SY	Replace City Street Pavement with Temporary Cold Mix	**$ 167.56**	$ 1,675.60	**$ 75.00**	$ 750.00
670	100	SY	Replace Non-City Street Pavement w/o Laydown Machine, Virgin Asphalt	**$ 74.50**	$ 7,450.00	**$ 75.00**	$ 7,500.00
675	10	SY	Replace Non-City Street Pavement w/o Laydown Machine, Recycled Asphalt	**$ 74.50**	$ 745.00	**$ 75.00**	$ 750.00
680	10	SY	Replace Non-City Street Pavement with Laydown Machine, Virgin Asphalt	**$ 92.00**	$ 920.00	**$ 75.00**	$ 750.00
685	10	SY	Replace Non-City Street Pavement with Laydown Machine, Recycled Asphalt	**$ 92.00**	$ 920.00	**$ 75.00**	$ 750.00
690	1	SY	Replace Non-City Street Pavement with Temporary Cold Mix	**$ 167.56**	$ 167.56	**$ 75.00**	$ 75.00
695	10	SY	Replace Concrete Pavement	**$ 261.50**	$ 2,615.00	**$ 275.00**	$ 2,750.00
700	50	LF	Replace Concrete Curb & Gutter	**$ 45.00**	$ 2,250.00	**$ 45.00**	$ 2,250.00
705	10	SY	Replace Concrete Sidewalk	**$ 155.00**	$ 1,550.00	**$ 170.00**	$ 1,700.00
710	10	CY	Replace Gravel Surface, 0”-2”	**$ 56.00**	$ 560.00	**$ 85.00**	$ 850.00
715	10	CY	Replace Gravel Surface, 2”-4”	**$ 66.00**	$ 660.00	**$ 120.00**	$ 1,200.00
720	150	SY	Base course/Gravel (crushed or landscape), 0’-3”	**$ 34.00**	$ 5,100.00	**$ 35.00**	$ 5,250.00
725	50	SY	Base course/Gravel (crushed or landscape), 3”-6”	**$ 45.00**	$ 2,250.00	**$ 45.00**	$ 2,250.00
730	4	EA	Service, 3/4" Single, New Main	**$ 1,262.50**	$ 5,050.00	**$ 1,475.00**	$ 5,900.00
735	2	EA	Service, 3/4" Double, New Main	**$ 1,662.50**	$ 3,325.00	**$ 1,775.00**	$ 3,550.00
740	2	EA	Service, 1", New Main	**$ 1,887.50**	$ 3,775.00	**$ 1,825.00**	$ 3,650.00
745	1	EA	Service, 1 1/2", New Main	**$ 3,670.00**	$ 3,670.00	**$ 3,450.00**	$ 3,450.00
750	1	EA	Service, 2", New Main	**$ 3,985.00**	$ 3,985.00	**$ 3,870.00**	$ 3,870.00
755	5	EA	Service, 3/4" Single, Existing Main	**$ 1,450.00**	$ 7,250.00	**$ 1,475.00**	$ 7,375.00
760	2	EA	Service, 3/4" Double, Existing Main	**$ 1,912.50**	$ 3,825.00	**$ 1,775.00**	$ 3,550.00
765	1	EA	Service, 1", Existing Main	**$ 1,900.00**	$ 1,900.00	**$ 1,825.00**	$ 1,825.00
770	1	EA	Service, 1 1/2", Existing Main	**$ 3,670.00**	$ 3,670.00	**$ 3,450.00**	$ 3,450.00
775	1	EA	Service, 2", Existing Main	**$ 4,300.00**	$ 4,300.00	**$ 3,870.00**	$ 3,870.00
780	5	EA	Service Replacement, 3/4"	**$ 1,602.50**	$ 8,012.50	**$ 1,475.00**	$ 7,375.00
785	2	EA	Service Replacement, Double, 3/4"	**$ 1,950.00**	$ 3,900.00	**$ 1,775.00**	$ 3,550.00
790	1	EA	Service Replacement, 1”	**$ 2,100.00**	$ 2,100.00	**$ 1,825.00**	$ 1,825.00

				AAC		Sub Surface	
Bid Item	**Approx. QTY.**	**Unit**	**Article and Description**	**Unit Price**	Item Price	**Unit Price**	Item Price
795	1	EA	Service Replacement, 1 1/2"	**$ 3,875.00**	$ 3,875.00	**$ 3,450.00**	$ 3,450.00
800	1	EA	Service Replacement, 2"	**$ 4,512.00**	$ 4,512.00	**$ 3,870.00**	$ 3,870.00
805	3	EA	Meter Box Relocation/Replacement, 3/4"	**$ 1,000.00**	$ 3,000.00	**$ 895.00**	$ 2,685.00
810	1	EA	Meter Box Relocation/Replacement, 1"	**$ 1,150.00**	$ 1,150.00	**$ 915.00**	$ 915.00
815	1	EA	Meter Box Relocation/Replacement, 1-1/2"	**$ 1,800.00**	$ 1,800.00	**$ 1,400.00**	$ 1,400.00
820	1	EA	Meter Box Relocation/Replacement, 2"	**$ 1,900.00**	$ 1,900.00	**$ 1,400.00**	$ 1,400.00
825	5	EA	Service Transfer, 3/4"	**$ 812.50**	$ 4,062.50	**$ 725.00**	$ 3,625.00
830	2	EA	Service Transfer, 1"	**$ 912.50**	$ 1,825.00	**$ 825.00**	$ 1,650.00
835	1	EA	Service Transfer, 1 1/2"	**$ 1,112.50**	$ 1,112.50	**$ 925.00**	$ 925.00
840	1	EA	Service Transfer at Main, 2"	**$ 1,325.00**	$ 1,325.00	**$ 975.00**	$ 975.00
845	1	EA	Retire Existing Service at Main, 3/4"- 2"	**$ 962.50**	$ 962.50	**$ 725.00**	$ 725.00
850	1	EA	Retire Existing Meter Box & Setting	**$ 437.50**	$ 437.50	**$ 525.00**	$ 525.00
855	1	EA	Adjust Meter Box To Grade	**$ 412.50**	$ 412.50	**$ 425.00**	$ 425.00
860	11	EA	Service Saddle, 3/4" Tap, 4"-12" Main	**$ 500.00**	$ 5,500.00	**$ 650.00**	$ 7,150.00
865	4	EA	Service Saddle, 1" Tap, 4"-12" Main	**$ 462.50**	$ 1,850.00	**$ 675.00**	$ 2,700.00
870	3	EA	Service Saddle, 1 1/2" Tap, 4"-12" Main	**$ 562.50**	$ 1,687.50	**$ 750.00**	$ 2,250.00
875	3	EA	Service Saddle, 2" Tap, 4"-12" Main	**$ 650.00**	$ 1,950.00	**$ 775.00**	$ 2,325.00
880	100	LF	Service Tubing, 3/4"	**$ 28.75**	$ 2,875.00	**$ 31.50**	$ 3,150.00
885	100	LF	Service Tubing, 1"	**$ 34.12**	$ 3,412.00	**$ 33.75**	$ 3,375.00
890	100	LF	Service Tubing, 1 1/2"	**$ 46.50**	$ 4,650.00	**$ 44.00**	$ 4,400.00
895	25	LF	Service Tubing, 2"	**$ 65.50**	$ 1,637.50	**$ 53.00**	$ 1,325.00
900	1	EA	Air and Vacuum Valve (individual)	**$ 450.00**	$ 450.00	**$ 1,550.00**	$ 1,550.00
905	1	GROUP OF 10	Air and Vacuum Valves	**$ 8,045.00**	$ 8,045.00	**$ 15,500.00**	$ 15,500.00
910	1	EA	Automatic Flushing Valve	**$ 5,867.50**	$ 5,867.50	**$ 4,350.00**	$ 4,350.00
915	$20,000	%	Materials Mark-Up Over Invoice	**$ 3,600.00**	$ 3,600.00	**$ 1,500.00**	$ 1,500.00
920	$8,000	%	Traffic Control Mark-Up Over Invoice	**$ 1,440.00**	$ 1,440.00	**$ 1,200.00**	$ 1,200.00
925	1	Allow.	Street-Cut Permits	**$ 175.00**	$ 175.00	**$ 375.00**	$ 375.00
930	1	EA	Project Signs	**$ 675.00**	$ 675.00	**$ 450.00**	$ 450.00
935	10	HR	Archeological Required Delay (after 2 hrs.)	**$ 250.00**	$ 2,500.00	**$ 185.00**	$ 1,850.00
940	1	LS	Archeological Required Mob/Demob	**$ 725.00**	$ 725.00	**$ 700.00**	$ 700.00
EMERGENCY REPAIR					$ -		$ -
9000	175	HR	Supervisor's Truck with tools	**$ 35.00**	$ 6,125.00	**$ 30.00**	$ 5,250.00
9100	80	HR	Backhoe/Skid Steer	**$ 57.00**	$ 4,560.00	**$ 58.00**	$ 4,640.00
9200	8	HR	Compressor with tools	**$ 54.00**	$ 432.00	**$ 35.00**	$ 280.00
9300	16	HR	Dump Truck	**$ 65.00**	$ 1,040.00	**$ 60.00**	$ 960.00
9400	4	HR	Pump	**$ 25.00**	$ 100.00	**$ 15.00**	$ 60.00
9500	300	HR	Laborer	**$ 42.50**	$ 12,750.00	**$ 43.00**	$ 12,900.00
9600	200	HR	Pipe Fitter	**$ 44.50**	$ 8,900.00	**$ 45.00**	$ 9,000.00
9700	200	HR	Equipment Operator	**$ 57.50**	$ 11,500.00	**$ 58.00**	$ 11,600.00
9800	175	HR	Foreman	**$ 59.50**	$ 10,412.50	**$ 60.00**	$ 10,500.00
9900	$5,000	%	Rental Items Mark-Up Over Invoice (multiply $5,000 x your % for Item Price)	**$ 1,000.00**	$ 1,000.00	**$ 900.00**	$ 900.00
9950	$20,000	%	Materials Mark-Up Over Invoice (multiply $20,000 x your 5 for Item Price)	**$ 3,600.00**	$ 3,600.00	**$ 1,500.00**	$ 1,500.00

Signature: Michael Moya
Michael Moya (Aug 18, 2021 07:37 MDT)

Email: mrmoya@ci.santa-fe.nm.us

City of Santa Fe

Real Estate Summary of Contracts, Agreements, Amendments & Leases

Section to be completed by department

1. Munis Contract # **3202929**

Contractor: **Sub Surface Contracting**

Description: **CIP# 3058 Priority Line Replacement**

Contract ☐ Agreement ☉ Lease / Rent ☐ Amendment ☐

Term Start Date: **as approved** Term End Date: **6/30/25**

☑ Approved by Council Date: **Pending**

Contract / Lease: **Contract $2,250,000**

Amendment # _____ to the Original Contract / Lease # _____

Increase/(Decrease) Amount $ _____

Extend Termination Date to: _____

☐ Approved by Council Date: _____

Amendment is for:

2. **HISTORY** of Contract, Amendments & Lease / Rent - **Please Elaborate** (option: attach spreadsheet if multiple amendments)

3. **Procurement History:** **21/43/B**

Fran Dr[illegible]away (Aug 23, 2021 12:29 MDT) Aug 23, 2021

Purchasing Officer Review: Date:

Comment & Exceptions: Issuance of award from ITB 21/43/B. 1st. year.

4. **Funding Source:** **Water Enterprise Fund CIP** **Org / Object:** **5050395.572970**

Andy Hopkins (Aug 23, 2021 11:13 MDT) Aug 23, 2021

Budget Officer Approval: Date:

Comment & Exceptions: _____

Staff Contact who completed this form: **Maya Martinez** Phone # **4271**

Email: **mfmartinez@santafenm.gov**

To be recorded by City Clerk:

Clerk # _____

Date of Execution: _____

SUBSURF-01 DONISCHUK

CERTIFICATE OF LIABILITY INSURANCE

DATE (MM/DD/YYYY) 5/20/2021

THIS CERTIFICATE IS ISSUED AS A MATTER OF INFORMATION ONLY AND CONFERS NO RIGHTS UPON THE CERTIFICATE HOLDER. THIS CERTIFICATE DOES NOT AFFIRMATIVELY OR NEGATIVELY AMEND, EXTEND OR ALTER THE COVERAGE AFFORDED BY THE POLICIES BELOW. THIS CERTIFICATE OF INSURANCE DOES NOT CONSTITUTE A CONTRACT BETWEEN THE ISSUING INSURER(S), AUTHORIZED REPRESENTATIVE OR PRODUCER, AND THE CERTIFICATE HOLDER.

IMPORTANT: If the certificate holder is an ADDITIONAL INSURED, the policy(ies) must have ADDITIONAL INSURED provisions or be endorsed. If SUBROGATION IS WAIVED, subject to the terms and conditions of the policy, certain policies may require an endorsement. A statement on this certificate does not confer rights to the certificate holder in lieu of such endorsement(s).

PRODUCER License # 0757776 HUB International Insurance Services (SOW) 2905 Rodeo Park Drive East Building 6, Suite 100 Santa Fe, NM 87505	CONTACT NAME: Michelle Vialpando PHONE (A/C, No, Ext): (505) 992-1873 FAX (A/C, No): (866) 621-0427 E-MAIL ADDRESS: michelle.vialpando@hubinternational.com
INSURED Sub Surface Contracting Inc 27A Paseo De River St Santa Fe, NM 87507	INSURER(S) AFFORDING COVERAGE — NAIC # INSURER A : ACUITY, A Mutual Insurance Company — 14184 INSURER B : Builders Trust of New Mexico INSURER C : INSURER D : INSURER E : INSURER F :

COVERAGES **CERTIFICATE NUMBER:** **REVISION NUMBER:**

THIS IS TO CERTIFY THAT THE POLICIES OF INSURANCE LISTED BELOW HAVE BEEN ISSUED TO THE INSURED NAMED ABOVE FOR THE POLICY PERIOD INDICATED. NOTWITHSTANDING ANY REQUIREMENT, TERM OR CONDITION OF ANY CONTRACT OR OTHER DOCUMENT WITH RESPECT TO WHICH THIS CERTIFICATE MAY BE ISSUED OR MAY PERTAIN, THE INSURANCE AFFORDED BY THE POLICIES DESCRIBED HEREIN IS SUBJECT TO ALL THE TERMS, EXCLUSIONS AND CONDITIONS OF SUCH POLICIES. LIMITS SHOWN MAY HAVE BEEN REDUCED BY PAID CLAIMS.

INSR LTR	TYPE OF INSURANCE	ADDL INSD	SUBR WVD	POLICY NUMBER	POLICY EFF (MM/DD/YYYY)	POLICY EXP (MM/DD/YYYY)	LIMITS	
A	X COMMERCIAL GENERAL LIABILITY CLAIMS-MADE X OCCUR X PD Ded: $500 GEN'L AGGREGATE LIMIT APPLIES PER: POLICY X PRO-JECT LOC OTHER:			Z75944	7/1/2020	7/1/2021	EACH OCCURRENCE DAMAGE TO RENTED PREMISES (Ea occurrence) MED EXP (Any one person) PERSONAL & ADV INJURY GENERAL AGGREGATE PRODUCTS - COMP/OP AGG 	$ 1,000,000 $ 250,000 $ 10,000 $ 1,000,000 $ 3,000,000 $ 3,000,000 $
A	AUTOMOBILE LIABILITY X ANY AUTO OWNED AUTOS ONLY SCHEDULED AUTOS X HIRED AUTOS ONLY X NON-OWNED AUTOS ONLY			Z75944	7/1/2020	7/1/2021	COMBINED SINGLE LIMIT (Ea accident) BODILY INJURY (Per person) BODILY INJURY (Per accident) PROPERTY DAMAGE (Per accident) 	$ 1,000,000 $ $ $ $
A	UMBRELLA LIAB X OCCUR X EXCESS LIAB CLAIMS-MADE DED X RETENTION $ 0			Z75944	7/1/2020	7/1/2021	EACH OCCURRENCE AGGREGATE 	$ 2,000,000 $ 2,000,000 $
B	WORKERS COMPENSATION AND EMPLOYERS' LIABILITY ANY PROPRIETOR/PARTNER/EXECUTIVE OFFICER/MEMBER EXCLUDED? (Mandatory in NH) Y / N: Y If yes, describe under DESCRIPTION OF OPERATIONS below	N / A		0692	1/1/2021	1/1/2022	X PER STATUTE OTH-ER E.L. EACH ACCIDENT E.L. DISEASE - EA EMPLOYEE E.L. DISEASE - POLICY LIMIT	$ 2,000,000 $ 2,000,000 $ 2,000,000
A	Leased/Rented Eqpt			Z75944	7/1/2020	7/1/2021	Ded: $500 / Limit	200,000

DESCRIPTION OF OPERATIONS / LOCATIONS / VEHICLES (ACORD 101, Additional Remarks Schedule, may be attached if more space is required)

CERTIFICATE HOLDER

City of Santa Fe
Public Utilities Department
801 West San Mateo
Santa Fe, NM 87505

CANCELLATION

SHOULD ANY OF THE ABOVE DESCRIBED POLICIES BE CANCELLED BEFORE THE EXPIRATION DATE THEREOF, NOTICE WILL BE DELIVERED IN ACCORDANCE WITH THE POLICY PROVISIONS.

AUTHORIZED REPRESENTATIVE

© 1988-2015 ACORD CORPORATION. All rights reserved.
The ACORD name and logo are registered marks of ACORD

SUBSURF-01 DONISCHUK

CERTIFICATE OF LIABILITY INSURANCE

DATE (MM/DD/YYYY) 5/20/2021

THIS CERTIFICATE IS ISSUED AS A MATTER OF INFORMATION ONLY AND CONFERS NO RIGHTS UPON THE CERTIFICATE HOLDER. THIS CERTIFICATE DOES NOT AFFIRMATIVELY OR NEGATIVELY AMEND, EXTEND OR ALTER THE COVERAGE AFFORDED BY THE POLICIES BELOW. THIS CERTIFICATE OF INSURANCE DOES NOT CONSTITUTE A CONTRACT BETWEEN THE ISSUING INSURER(S), AUTHORIZED REPRESENTATIVE OR PRODUCER, AND THE CERTIFICATE HOLDER.

IMPORTANT: If the certificate holder is an ADDITIONAL INSURED, the policy(ies) must have ADDITIONAL INSURED provisions or be endorsed. If SUBROGATION IS WAIVED, subject to the terms and conditions of the policy, certain policies may require an endorsement. A statement on this certificate does not confer rights to the certificate holder in lieu of such endorsement(s).

PRODUCER License # 0757776 HUB International Insurance Services (SOW) 2905 Rodeo Park Drive East Building 6, Suite 100 Santa Fe, NM 87505	CONTACT NAME: Michelle Vialpando PHONE (A/C, No, Ext): (505) 992-1873 FAX (A/C, No): (866) 621-0427 E-MAIL ADDRESS: michelle.vialpando@hubinternational.com
INSURED Sub Surface Contracting Inc 27A Paseo De River St Santa Fe, NM 87507	INSURER(S) AFFORDING COVERAGE — NAIC # INSURER A : ACUITY, A Mutual Insurance Company — 14184 INSURER B : Builders Trust of New Mexico INSURER C : INSURER D : INSURER E : INSURER F :

COVERAGES **CERTIFICATE NUMBER:** **REVISION NUMBER:**

THIS IS TO CERTIFY THAT THE POLICIES OF INSURANCE LISTED BELOW HAVE BEEN ISSUED TO THE INSURED NAMED ABOVE FOR THE POLICY PERIOD INDICATED. NOTWITHSTANDING ANY REQUIREMENT, TERM OR CONDITION OF ANY CONTRACT OR OTHER DOCUMENT WITH RESPECT TO WHICH THIS CERTIFICATE MAY BE ISSUED OR MAY PERTAIN, THE INSURANCE AFFORDED BY THE POLICIES DESCRIBED HEREIN IS SUBJECT TO ALL THE TERMS, EXCLUSIONS AND CONDITIONS OF SUCH POLICIES. LIMITS SHOWN MAY HAVE BEEN REDUCED BY PAID CLAIMS.

INSR LTR	TYPE OF INSURANCE	ADDL INSD	SUBR WVD	POLICY NUMBER	POLICY EFF (MM/DD/YYYY)	POLICY EXP (MM/DD/YYYY)	LIMITS	
A	X COMMERCIAL GENERAL LIABILITY CLAIMS-MADE X OCCUR X PD Ded: $500 GEN'L AGGREGATE LIMIT APPLIES PER: POLICY X PRO-JECT LOC OTHER:			Z75944	7/1/2021	7/1/2022	EACH OCCURRENCE DAMAGE TO RENTED PREMISES (Ea occurrence) MED EXP (Any one person) PERSONAL & ADV INJURY GENERAL AGGREGATE PRODUCTS - COMP/OP AGG 	$ 1,000,000 $ 250,000 $ 10,000 $ 1,000,000 $ 3,000,000 $ 3,000,000 $
A	AUTOMOBILE LIABILITY X ANY AUTO OWNED AUTOS ONLY SCHEDULED AUTOS X HIRED AUTOS ONLY X NON-OWNED AUTOS ONLY			Z75944	7/1/2021	7/1/2022	COMBINED SINGLE LIMIT (Ea accident) BODILY INJURY (Per person) BODILY INJURY (Per accident) PROPERTY DAMAGE (Per accident) 	$ 1,000,000 $ $ $ $
A	UMBRELLA LIAB X OCCUR X EXCESS LIAB CLAIMS-MADE DED X RETENTION $ 0			Z75944	7/1/2021	7/1/2022	EACH OCCURRENCE AGGREGATE 	$ 2,000,000 $ 2,000,000 $
B	WORKERS COMPENSATION AND EMPLOYERS' LIABILITY ANY PROPRIETOR/PARTNER/EXECUTIVE OFFICER/MEMBER EXCLUDED? (Mandatory in NH) Y / N: Y If yes, describe under DESCRIPTION OF OPERATIONS below	N / A		0692	1/1/2021	1/1/2022	X PER STATUTE OTH-ER E.L. EACH ACCIDENT E.L. DISEASE - EA EMPLOYEE E.L. DISEASE - POLICY LIMIT	 $ 2,000,000 $ 2,000,000 $ 2,000,000
A	Leased/Rented Eqpt			Z75944	7/1/2021	7/1/2022	Ded: $500 / Limit	200,000

DESCRIPTION OF OPERATIONS / LOCATIONS / VEHICLES (ACORD 101, Additional Remarks Schedule, may be attached if more space is required)

CERTIFICATE HOLDER

City of Santa Fe
Public Utilities Department
801 West San Mateo
Santa Fe, NM 87505

CANCELLATION

SHOULD ANY OF THE ABOVE DESCRIBED POLICIES BE CANCELLED BEFORE THE EXPIRATION DATE THEREOF, NOTICE WILL BE DELIVERED IN ACCORDANCE WITH THE POLICY PROVISIONS.

AUTHORIZED REPRESENTATIVE

© 1988-2015 ACORD CORPORATION. All rights reserved.
The ACORD name and logo are registered marks of ACORD

City of Santa Fe

Treasury Department
200 Lincoln Ave.
Santa Fe, New Mexico 87504-0909
505-955-6551

BUSINESS REGISTRATION

Business Name: SUB SURFACE CONTRACTING INC.
DBA: SUB SURFACE CONTRACTING INC.

Business Location: 27 PASEO DE RIVER A
SANTA FE , NM 87507

Owner: SUB SURFACE CONTRACTING INC.

License Number: 46991

Issued Date: April 01, 2021

Expiration Date: April 01, 2022

CRS Number: 02104256000

License Type: Business License - Renewable

Classification: Contractor - Specialty

Fees Paid: $35.00

SUB SURFACE CONTRACTING INC.
27 A PASEO DE RIVER
SANTA FE, NM 87507

THIS IS NOT A CONSTRUCTION PERMIT OR SIGN PERMIT. APPROPRIATE PERMITS MUST BE OBTAINED FROM THE CITY OF SANTA FE BUILDING PERMIT DIVISION PRIOR TO COMMENCEMENT OF ANY CONSTRUCTION OR THE INSTALLATION OF ANY EXTERIOR SIGN.

THIS REGISTRATION/LICENSE IS NOT TRANSFERRABLE TO OTHER BUSINESSES OR PREMISES.

TO BE POSTED IN A CONSPICUOUS PLACE

Ver. 16 2/7/2020

CITY OF SANTA FE PROCUREMENT CHECKLIST

Contractor Name: Sub Surface Contracting, Inc.

Procurement Title: 21/43/B Priority Line Replacement Price Agreement, CIP # 3058

Procurement Method: State Price Agreement ☐ *Cooperative* ☐ *Sole Source* ☐ *Other* ☐ _____

Exempt ☐ *Request For Proposal (*RFP) ☒ *Invitation To Bid (ITB)* ☐ *Contract under 60K* ☐ *Contract over 60K* ☐

Department Requesting Bill Huey Water Division, PUD

Procurement Requirements:
A procurement file shall be maintained for all contracts, regardless of the method of procurement. The procurement file shall contain the basis on which the award is made, all submitted bids, all evaluation materials, score sheets, quotations and all other documentation related to or prepared in conjunction with evaluation, negotiation, and the award process. The procurement shall contain a written determination from the Requesting Department, signed by the purchasing officer, setting forth the reasoning for the contract award decision before submitting to the Committees. .

REQUIRED DOCUMENTS FOR APPROVAL BY PURCHASING*

YES	N/A	
☒	☐	Approved Procurement Checklist (by Purchasing)
☒	☐	Memo addressed to City Manager (under 60K) Committees/City Council (over 60K)
☐	☒	State Price Agreement
☐	☒	RFP
☐	☒	Evaluation Committee Report
☒	☐	ITB
☒	☐	Bib Tab
☐	☒	Quotes (3 valid current quotes)
☐	☒	Cooperative Agreement
☐	☒	Sole Source Request and Determination Form
☐	☒	Contractors Exempt Letter
☒	☐	Purchasing Officers approval for exempt procurement
☐	☒	BAR
☐	☒	FIR
☒	☐	Executed Contract, Agreement or Amendment
☒	☐	Current Business Registration and CRS numbers on contract or agreement
☒	☐	Summary of Contracts and Agreements form
☐	☒	Certificate of Insurance
☐	☐	All documentation presented to Committees
☐	☐	Other: _____

Public Utilities Dept / Water Division/Bill Huey (Bill Huey)	Engineer	8/17/21
Department Rep Printed Name (attesting that all information included)	Title	Date
Fran Dunaway (Fran Dunaway, Aug 23, 2021 12:29 MDT)	Chief Procurement Officer	Aug 23, 2021
Purchasing Officer (attesting that all information is reviewed)	Title	Date

Include all other substantive documents and records of communication that pertain to the procurement and any resulting contract.

*

Item#_____
Munis Contract#3202929
Original Contract Item#_____
SWPA/GSA/Coop/RFP/ITB#: _____

CITY OF SANTA FE
AMENDMENT No. 2 TO
The Priority Line Replacement Price Agreement
ITEM#21-0484

This AMENDMENT No. 2 (the "Amendment") amends the CITY OF SANTA FE CONTRACT, dated September 10, 2021 (the "Contract"), between the City of Santa Fe (the "City") and Sub Surface Contracting, Inc. (the "Contractor"). The date of this Amendment shall be the date when it is executed by the City and the Contractor whichever occurs last.

RECITALS:

A. Under the terms of the Contract, Contractor has agreed to provide the Priority Line Replacement for the City of Santa Fe.

B. Pursuant to Article 14 of the Contract, and for good and valuable consideration, the receipt and sufficiency of which are acknowledged by the parties, the City and the Contractor agree as follows:

1. COMPENSATION.

Article 2, paragraph A of the Contract is amended to increase the amount of compensation by a total of $1,656,806.25 so that Article 2, paragraph A reads in its entirety as follows:

A. The City shall pay to the Contractor in full payment for services satisfactorily performed a total amount up to six million one hundred and ninety thousand dollars ($6,190,000.00). The New Mexico gross receipts tax levied on the amounts payable under this Agreement totaling five-hundred and six thousand, eight hundred and six dollars and twenty-five cents ($506,806.25) shall be paid by the City to the Contractor as described in Exhibit A

attached hereto. **The total amount payable to the Contractor under this Agreement, including gross receipts tax and expenses, shall not exceed six million, six hundred ninety-six thousand, eight hundred and six dollars and twenty-five cents ($6,696,806.25). This amount is a maximum and not a guarantee that the work assigned to be performed by the Contractor under this Agreement shall equal the amount stated herein. The parties do not intend for the Contractor to continue to provide services without compensation when the total compensation amount is reached. Contractor is responsible for notifying the City when the services provided under this Agreement reach the total compensation amount. In no event will the Contractor be paid for services provided in excess of the total compensation amount without this Agreement being amended in writing prior to those services in excess of the total compensation amount being provided.**

2. CONTRACT IN FULL FORCE.

Except as specifically provided in this Amendment, the Contract remains and shall remain in full force and effect, in accordance with its terms.

IN WITNESS WHEREOF, the parties have executed this Amendment No. 2 to the Contract as of the dates set forth below.

CITY OF SANTA FE:

_____
ALAN WEBER, MAYOR

DATE:_____

ATTEST:

CONTRACTOR:
Sub Surface Contracting, Inc.

Jeremey Sanderson
_____
JEREMEY SANDERSON,
SUPERINTENDENT/VICE PRESIDENT

DATE: Oct 29, 2024
CRS# 02104256000

Registration #46991

_____
CITY CLERK

CITY ATTORNEY'S OFFICE:

Marcos Martinez
Marcos Martinez (Oct 29, 2024 13:08 MDT)

_____
SENIOR ASSISTANT CITY ATTORNEY

APPROVED FOR FINANCES:

_____
FINANCE DIRECTOR

Signature:

Email:

GB Subsurface Contract Amendment 2 Munis Contract 3202929

Final Audit Report 2024-10-30

Created:	2024-10-30
By:	JAMES EDWARDS (jwedwards@santafenm.gov)
Status:	Canceled / Declined
Transaction ID:	CBJCHBCAABAAPkxY8rw6KFBodA1TUNO7hWQ4voA2ZUUd

"GB Subsurface Contract Amendment 2 Munis Contract 3202929" History

Document created by JAMES EDWARDS (jwedwards@santafenm.gov)
2024-10-30 - 7:26:21 PM GMT- IP address: 63.232.20.2

Document emailed to ajhopkins@santafenm.gov ajhopkins@santafenm.gov (ajhopkins@santafenm.gov) for signature
2024-10-30 - 7:33:29 PM GMT

Email viewed by ajhopkins@santafenm.gov ajhopkins@santafenm.gov (ajhopkins@santafenm.gov)
2024-10-30 - 7:40:14 PM GMT- IP address: 104.47.64.254

Document declined by ajhopkins@santafenm.gov ajhopkins@santafenm.gov (ajhopkins@santafenm.gov)
Decline reason: BAR requires Dept Director signature before it comes to Budget.
2024-10-30 - 7:41:49 PM GMT- IP address: 63.232.20.2

Powered by Adobe Acrobat Sign

GB Subsurface Contract Amendment 2 Munis Contract 3202929 (1)

Interim Agreement Report 2024-11-01

Created:	2024-10-31
By:	JAMES EDWARDS (jwedwards@santafenm.gov)
Status:	Out for Signature
Transaction ID:	CBJCHBCAABAAkXZt4nvM9wef6e3NIFPFul_ztw02Ppxo

Agreement History

Agreement history is the list of the events that have impacted the status of the agreement prior to the final signature. A final audit report will be generated when the agreement is complete.

"GB Subsurface Contract Amendment 2 Munis Contract 3202929 (1)" History

Document created by JAMES EDWARDS (jwedwards@santafenm.gov)
2024-10-31 - 9:01:41 PM GMT- IP address: 75.233.144.205

Document emailed to Jesse Roach (jdroach@santafenm.gov) for signature
2024-10-31 - 9:09:28 PM GMT

Email viewed by Jesse Roach (jdroach@santafenm.gov)
2024-10-31 - 9:21:50 PM GMT- IP address: 104.47.64.254

Document e-signed by Jesse Roach (jdroach@santafenm.gov)
Signature Date: 2024-10-31 - 9:22:47 PM GMT - Time Source: server- IP address: 63.232.20.2

Document emailed to John Dupuis (jedupuis@santafenm.gov) for signature
2024-10-31 - 9:22:55 PM GMT

Document e-signed by John Dupuis (jedupuis@santafenm.gov)
Signature Date: 2024-10-31 - 9:26:06 PM GMT - Time Source: server- IP address: 174.218.18.173

Document emailed to ajhopkins@santafenm.gov ajhopkins@santafenm.gov (ajhopkins@santafenm.gov) for signature
2024-10-31 - 9:26:13 PM GMT

Email viewed by ajhopkins@santafenm.gov ajhopkins@santafenm.gov (ajhopkins@santafenm.gov)
2024-10-31 - 11:22:29 PM GMT- IP address: 104.47.64.254

Document e-signed by ajhopkins@santafenm.gov ajhopkins@santafenm.gov (ajhopkins@santafenm.gov)
Signature Date: 2024-10-31 - 11:23:04 PM GMT - Time Source: server- IP address: 63.232.20.2

Document sent to JoAnn Lovato (jdlovato@santafenm.gov) and Travis Dutton-Leyda (tkduttonleyda@santafenm.gov) for signature. One of them to sign
2024-10-31 - 11:23:11 PM GMT

Email viewed by Travis Dutton-Leyda (tkduttonleyda@santafenm.gov)
2024-11-01 - 5:53:25 AM GMT- IP address: 104.28.48.217

Email viewed by JoAnn Lovato (jdlovato@santafenm.gov)
2024-11-01 - 4:13:37 PM GMT- IP address: 63.232.20.2

City of Santa Fe, New Mexico
Memorandum

DATE: January 29th, 2024

TO: Governing Body, Finance Committee and Public Works Committee

VIA: Regina Wheeler
Regina Wheeler, Public Works Director

FROM: Michael Dalmolin, PE, Traffic Operations Engineer

ACTION:
Request for Approval of Agreement for the Conversion of Streetlights with Public Service Company of New Mexico (PNM) for a Total Amount of $568,511, including NMGRT, to Convert Approximately 1,100 PNM-Owned Streetlights to LED Technology Meeting the City's Roadway Lighting Standards. (Michael Dalmolin, PE, Complete Streets Traffic Operations Engineering Supervisor; rdalmolin@santafenm.gov)

BACKGROUND AND SUMMARY:
Streetlights within the City of Santa Fe play a large role in improving roadway safety. In fact, the Federal Highway Administration (FHWA) estimates that street lighting reduces vehicle crashes at night between 33-38% for crashes at intersections and approximately 28% for injury crashes on roadways. The safety benefits of street lighting for vulnerable road users like pedestrians are even greater and is shown to reduce pedestrian injury crashes up to 42%.

The City of Santa Fe owns approximately 3,500 of the 5,550 streetlights in the City and PNM owns most of the remaining 2,000 streetlights in the City. A map of streetlights within the City is attached and shows the locations of City-Owned and PNM-owned streetlights. On February 24, 2021, the City's Governing Body approved a contract to convert City-owned streetlights to Light Emitting Diodes (LED) streetlight technology. In contrast to the existing High-Pressure Sodium (HPS) technology, LEDs reduce power consumption by 60%, have a much longer life span, improve streetlight reliability, are equipped with full cutoff fixtures protecting the night sky, and can be fit with shields to reduce fugitive light trespass out of the right-of-way. At the end of their life cycle, HPS technology is also considered hazardous waste due to the use of mercury and has special disposal requirements by the Environmental Protection Agency (EPA).

After the conversion contract was approved by Governing Body, the City undertook a several months long community-guided design process with the aim to balance meeting the appropriate lighting standards for streets while protecting the night sky and providing visual comfort. With support from the International Dark Sky Association, Governing Body adopted requirements for roadway luminaires in the attached Roadway Lighting Guidelines on May 26th, 2021, and set in motion a $2.900,000 contract to convert all 3,500 city-owned streetlights to LEDs meeting these new guidelines. Daikia Energy Solutions was awarded the contract and began the LED conversion of city-owned streetlights in October 2021. The conversion was completed in March 2022 and resulted in 2,563,000 kWh and $233,000 of energy savings within the first year. The new LED streetlights are performing with high reliability, and we have seen a significant decrease in complaints.

On April 14, 2021, the Governing Body approved a contract with PNM to convert the 2,000 PNM-owned streetlights to LEDs. PNM's streetlight program is governed by Rate 20 set by New Mexico's Public Regulation Commission (PRC) and the LEDs and equipment required by the Roadway Lighting Guidelines was not available in the PRC Rate 20 at the time of the contract. Thus, PNM undertook the regulatory process and achieved adding LEDs meeting the City's Roadway Lighting Guidelines into the "Approved Substitute" list in the Rate 20 Tariff approved for installation on PNM streetlights. Now that

these approved luminaires have been added to the "Approved Substitute" list, the City and PNM have reached a new agreement to proceed with some of the PNM-owned streetlights within the City.

PNM estimates approximately 1,100 streetlights, or about half of the PNM-owned lights within the City, will be converted with the contract amount of $568,511. Streetlights will be prioritized for conversion using a host of criteria, including if a streetlight has been reported as a nuisance, if the streetlight is important to roadway safety, and what type of streetlight will provide the greatest energy savings. The City currently pays PNM approximately $620,000 per year for electricity and maintenance of these streetlights based on current pricing in Rate 20. Based on the estimate provided by PNM, the energy and maintenance savings would be $135,000 per year and thus the project would pay for itself in approximately 4 years.

Phases of this project include PNM procurement, permitting, conversion and billing changes. The conversion phase of the project is estimated to take 6 months after issuance of the Purchase Order (PO) but could take up to a year in case of unforeseen circumstances. The remaining approximately 1,000 PNM owned streetlights will be converted incrementally using Public Works lighting budget through maintenance conversions unless another capital project is funded. The estimated amount of funding needed to complete the remaining fixtures is $500,000.

Public Engagement will include an Early Neighborhood Notification (ENN) planned for February and the project website, SantafeLED.com will provide information about the conversion and take feedback from the public. Constituents who provided emails during the first conversion will receive updates on the project and be invited to participate in the ENN meeting.

Procurement Method:
The procurement method is exempt from procurement since PNM, the local electric utility company, owns these lights and PRC regulations define the conversion by PNM.

Munis Contract:
Munis Contract # 3204540

Funding Source: Resource Conservation CIP / Debt Service and Lease Revenue Fund
Munis Funding Source/Number: CIP RESRCE - 315
Munis Org Name/Number: SOLAR CIP - 3159980 AH
Munis Object Name/Number: WIP CONSTRUCTION - 572970
Project ID: STREETLTS

ATTACHMENTS:
City of Santa Fe Streetlight Map
Agreement for the Conversion of Streetlights with Public Service Company of New Mexico
City of Santa Fe Roadway Lighting Guidelines
Dalkia City of Santa Fe October Report
Summary of Contracts
Procurement Checklist

Halona Crowe
Reviewed by Halona Crowe

DocuSign Envelope ID: 5CC028D8-C4C4-40B0-B28A-185D866C6585

AGREEMENT FOR THE CONVERSION OF STREETLIGHTS OWNED BY THE PUBLIC SERVICE COMPANY OF NEW MEXICO

This Agreement for the Conversion of Streetlights Owned by the Public Service Company of New Mexico ("Agreement") is made and entered into as of the last date of the parties' signatures below, by and between the Public Service Company of New Mexico ("PNM" or "Company"), a New Mexico Corporation, and the City of Santa Fe ("Santa Fe" or "City"), a municipal corporation (collectively, "Parties").

RECITALS

WHEREAS, PNM owns approximately 2057 streetlights located within the City of Santa Fe;

WHEREAS, the streetlights owned by the Company consist of legacy electric light generation methods, including, without limitation, incandescent, mercury vapor, and high pressure sodium lights;

WHEREAS, Santa Fe has asked PNM to complete a partial conversion of some the Company's streetlights into light-emitting diode ("LED") lights ("LED Streetlight Conversion Project");

WHEREAS, the City has formally approved the LED Streetlight Conversion Project and has also approved and set aside funding in the amount of Five Hundred and Twenty-Five Thousand and 00/100 Dollars ($525,000.00) to pay for the LED Streetlight Conversion Project;

WHEREAS, the current agreements and rate tariffs between PNM and Santa Fe that govern the provision of electricity to and maintenance of streetlights are as follows:

(i) Public Service Company of New Mexico Electric Services 17th Revised Rate No. 20 Canceling 16th Revised Rate No. 20 – Integrated System Streetlighting and Floodlighting Service (the "Rate Tariff);

(ii) Agreement for the Ongoing Incidental and Emergency Maintenance of the Street Lights Owned or Maintained by the City of Santa Fe executed in April of 2021;

WHEREAS, Santa Fe recognizes that the Rate Tariff may be changed through a future rate review proceeding before the New Mexico Public Regulation Commission and desires to proceed with the LED Conversion Project subject to costs that may be assessed by the Company in accordance with the terms and conditions of the Rate Tariff and this Agreement;

WHEREAS, the Company, acting in its capacity as a regulated public utility at all times material hereto, will complete the LED Conversion Project and shall charge Santa Fe for the

DocuSign Envelope ID: 5CC028D8-C4C4-40B0-B28A-185D866C6585

costs associated with the completion of the LED Conversion Project in accordance with the terms and conditions of the Rate Tariff and this Agreement; and

WHEREAS, the Parties desire to enter into this Agreement to set forth their respective rights and obligations arising from and related to this partial LED Conversion Project.

NOW THEREFORE, in consideration of the mutual terms, covenants, and conditions set forth in this Agreement, the Parties agree as follows:

AGREEMENT

1. PNM's Duties and Obligations.

a. PNM shall either contract with and pay third-party contractors or use its own crews to complete the LED Conversion Project.

b. PNM will direct its contractors or PNM crews to acquire the LED lights needed for the LED Conversion Project.

c. PNM will coordinate with its contractors or PNM crews to convert the streetlights identified by Santa Fe to LED lights by, among other things, providing to its contractors or PNM crews an LED Light Conversion Schedule that will help facilitate the timely completion of the LED Conversion Project.

d. PNM will endeavor to consider Santa Fe's input regarding the LED Light Conversion Schedule, which will set forth the different phases of the LED Conversion Project, organized by the neighborhoods where the partial conversion of Company-owned streetlights will occur.

e. PNM will direct its contractors or PNM crews to coordinate the appropriate disposal of the old streetlights which will be removed and converted during the LED Conversion Project.

f. PNM will make a good faith effort to complete the LED Conversion Project within twelve (12) months of the signing of this Agreement, although the Company cannot guarantee an exact date of completion, as such date is likely to fluctuate, and the City recognizes that the estimated timeline may change due to the lead time necessary for procuring fixtures from the manufacturer, which PNM currently estimates to be approximately 6 weeks.

g. PNM will charge Santa Fe for the costs associated with the completion of the LED Conversion Project on a monthly basis in accordance with the terms and conditions of the Rate Tariff and this Agreement.

h. PNM will charge to Santa Fe any depreciated value for those poles or lights that need to be permanently removed for this LED Conversion Project m

accordance with the terms and conditions of the Rate Tariff and this Agreement.

i. PNM will work with the City to communicate on a weekly basis regarding the status of the LED Conversion Project, such communication will include updates regarding what PNM-owned lights have been converted to LED.

j. PNM will change the rate to the appropriate Rate Tariff for each streetlight included in the LED Conversion Project after conversion in accordance with Applicable Law and provide the City with a rate change report in the form of **Schedule D** after the LED Conversion Project has been completed.

2. The Company's Work Limits. Notwithstanding anything to the contrary in this Agreement, PNM shall make a good faith effort to perform its duties and obligations hereunder but shall have no obligation to perform those duties or obligations to the extent that: (i) such duties or obligations would violate the work hours and limitations required by the Company's collective bargaining agreements, other union-related contracts or requirements, and procurement contracts with vendors; or (ii) PNM needs to reallocate personnel that would otherwise perform the duties and obligations to address emergencies or other system needs or outages, within and outside of New Mexico, arising from or related to PNM's electrical service obligations, in PNM's sole discretion.

3. Santa Fe's Duties and Obligations.

a. Santa Fe agrees to issue a Purchase Order to PNM in the amount of Five Hundred and Twenty Five Thousand and 00/100 Dollars ($525,000.00) including applicable GRT for the completion of the LED Conversion Project, which memorializes in writing Santa Fe's request that PNM convert certain Company-owned streetlights to LED lights within the City of Santa Fe in accordance with the Rate Tariff and this Agreement. PNM will share with Santa Fe certain information regarding Company-owned streetlights, if needed, so that Santa Fe can prepare the Purchase Order contemplated by this Agreement. Such information includes the number of Company-owned streetlights, the geographic location of Company-owned streetlights, and the types of Company-owned streetlights, categorized by light wattage. PNM will also provide Santa Fe with the cost of a conversion to an LED after a contractor has been selected by listing the cost per operational substitute on Appendix A.

b. Santa Fe agrees to include within the Purchase Order the following information: (i) the types of PNM-owned streetlights categorized by light wattage and the chosen operational substitute per Appendix A that Santa Fe wants the Company to convert to LED lights in connection with the LED Conversion Project and the light color and wattage for each chosen LED light. **Schedule "A"** to this Agreement provides a breakdown of PNM's existing streetlights, categorized by light type and light wattage, and lists the Company's installation allowance for each LED operational substitute, per the terms and conditions of the Rate Tariff and Appendix "A" thereto.

DocuSign Envelope ID: 5CC028D8-C4C4-40B0-B28A-185D866C6585

c. Santa Fe acknowledges and agrees that all Company-owned streetlights subject to the LED Conversion Project will be replaced with the approved LED operational substitutes listed in Appendix "A" to the Rate Tariff, and Santa Fe will identify exactly which operational substitutes the City has chosen for the conversion of Company-owned streetlights to LED lights. The operational substitutes chosen by the City shall be set forth on **Schedule "C"** to this Agreement. Santa Fe further acknowledges and agrees that it shall be responsible for all costs associated with the LED Conversion Project which exceed the installation allowances set forth in the Rate Tariff. Those costs include but are not limited to the actual costs incurred by PNM, the costs of additional material or equipment requested by the City, such as light shields, third party actuals, any applicable taxes, the cost of depreciated value in accordance with the language of the Rate Tariff, and the costs of PNM's loads.

d. Santa Fe agrees to pay the Company in accordance with the terms and conditions of the Rate Tariff and this Agreement.

e. The City shall provide PNM with a City Road Obstruction Permit upon application by PNM or its designated contractor.

4. Charges, Payment and Late Payments.

a. Subsection (I)(a) of the Rate Tariff states that, "[u]pon request from the Customer, the Company shall convert or install Company owned street lighting fixtures at its own expense up to the limits provided by the [Rate Tariff], with any remaining expenses being the responsibility of the Customer."

b. Subsection (III)(A)(l)(a) of the Rate Tariff states that, "the Customer shall pay all costs for ... [a]ny conversions of Company-owned Lights or Poles made at the request of the Customer, subject to the allowances set forth in [the Rate Tariff]. "

c. Article V of the Rate Tariff allows PNM to recover "payment of the Company's depreciated investment for any lamp and/or pole associated with the removal of any Company owned lighting facilities."

d. The Parties agree that Subsections (I)(a) and (III)(A)(l)(a) of the Rate Tariff allow PNM to charge Santa Fe for all costs of the LED Conversion Project which exceed the allowances set forth in the Rate Tariff.

e. The Parties further agree that PNM shall charge Santa Fe for the costs of the LED Conversion Project which exceed the allowances set forth in the Rate Tariff and the costs associated with the Company's depreciated investment in accordance with the terms and conditions of the Rate Tariff.

f. Santa Fe agrees to pay PNM for all costs associated with the LED

Conversion Project which exceed the allowances set forth in the Rate Tariff. Those costs include but are not limited to the actual costs incurred by PNM, the costs of additional material or equipment requested by the City, such as light shields, third party actuals, any applicable taxes, the cost of depreciated value in accordance with the language of the Rate Tariff, and the costs of PNM's loads. Santa Fe has approved and set aside Five Hundred and Twenty Five Thousand and 00/100 Dollars ($525,000.00) for the completion of the partial LED Conversion Project, which will include conversion by PNM of some of the Company's streetlights as specified by Santa Fe. The exact number of lights converted under the partial LED Conversion Project will depend on the costs of the conversion and the City's available funding.

g. All billing invoices submitted by PNM against Santa Fe's Purchase Order shall be paid by Santa Fe within forty-five (45) days after the date of receipt of the applicable invoice, unless Santa Fe reasonably and in good faith disputes any invoiced amounts billed against the Purchase Order in accordance with the terms set forth in Section 5 (the "Disputed Amounts"). for Disputed Amounts, any amounts not paid after the 75th day following the date of receipt of the applicable invoice will bear interest at the annual rate of 8% or the highest rate allowed by law, whichever is lower, from such date to the date of full payment.

5. Payment Disputes. If Santa Fe disputes any invoiced amount for PNM's performance of the services contemplated herein, Santa Fe must give notice to PNM by the date that such invoiced amount is due and payable in accordance with Section 4(h), setting forth in reasonable detail the basis for the dispute. Upon Santa Fe timely giving notice of any Disputed Amount, the Parties shall refrain from pursuing any other rights or remedies at law or in equity with respect to such Disputed Amount until all commercially reasonable efforts to resolve such Disputed Amounts in accordance with Section 27 are pursued.

6. Taxes. If gross receipts taxes are payable with respect to the duties and obligations performed by PNM hereunder, Santa Fe will be responsible for reimbursing the Company for those gross receipts taxes.

7. Santa Fe's Representations and Warranties. Santa Fe represents and warrants to PNM that the following statements are true and correct as of the Effective Date of this Agreement:

a. There is no pending or threatened, suit, action, litigation, or proceeding against or affecting Santa Fe that affects the validity or enforceability of this Agreement.

b. Santa Fe is not in violation of any law promulgated or judgment entered into by any governmental authority that individually or in the aggregate would affect its performance of any of its obligations under this Agreement.

c. The execution and delivery of this Agreement, the consummation of the

DocuSign Envelope ID: 5CC028D8-C4C4-40B0-B28A-185D866C8585

transactions contemplated herein, and Santa Fe's compliance with the terms and provisions hereof will not conflict with or result in a breach of, or require any consent under, Santa Fe's charter or other organizational documents, any law or regulation, or any order, injunction, or decree.

d. To the best of Santa Fe's knowledge, the information provided by Santa Fe relating to this Agreement and the LED Conversion Project is true, correct, and complete in every material respect and contains no untrue statement of material fact and does not omit a material fact that would otherwise make its statements contained in this Agreement misleading.

8. Term; Termination; Effect of Termination.

a. Term. Provided that this Agreement is not terminated earlier in accordance with the terms set forth in Section 8hereof, the Term of this Agreement will be for twelve (12) months beginning on the Effective Date or until the completion of the LED Conversion Project, whichever occurs earlier (the "Term"). The 12-month Term does not modify or otherwise extend the City's obligation to timely pay PNM within 45 days after the date of receipt of PNM's billing invoices, as set forth in Section 4 of this Agreement.

b. Termination.

i. Termination for Convenience. Santa Fe may terminate this Agreement at any time during the Term for convenience by providing no less than 90 days ' prior written notice to PNM.

ii. Termination for Cause by Santa Fe. Santa Fe may terminate this Agreement immediately upon written notice to PNM upon the occurrence of any of the following circumstances:

A. PNM becoming insolvent or being unable to pay its debts in the ordinary course of its business; PNM filing a voluntary petition under applicable bankruptcy or other insolvency laws; a receiver being appointed for the business affairs of PNM; any bankruptcy, reorganization, debt arrangement or other proceeding under any bankruptcy or other insolvency law being instituted against PNM that is not dismissed within forty-five (45) days thereafter; PNM making an assignment for the benefit of creditors; or PNM liquidating or ceasing to do business as a going concern;

B. A material breach of this Agreement by PNM and such breach not being cured, to Santa Fe's reasonable satisfaction, within thirty (30) days following notice thereof;

C. The failure of PNM to comply with applicable law in all material respects with regard to its obligations under this Agreement, and such failure not being cured within thirty (30) days following notice thereof; or

D. The failure of PNM to maintain the insurance requirements set forth in Section 20.

iii. Termination for Cause by PNM. PNM may terminate this Agreement pursuant to this Section 8(b)(iii) immediately upon written notice to Santa Fe upon the occurrence of any of the following circumstances:

A. Santa Fe becoming insolvent or being unable to pay its debts in the ordinary course; Santa Fe filing a voluntary petition under applicable bankruptcy or other insolvency laws; or any bankruptcy, reorganization, debt arrangement or other proceeding under any bankruptcy or other insolvency law being instituted against Santa Fe that is not dismissed within forty-five (45) days thereafter;

B. A material breach of this Agreement by Santa Fe and such breach not being cured, to PNM's reasonable satisfaction, within thirty (30) days following notice thereof; or

C. The failure of Santa Fe to comply with applicable law in all material respects with respect to its respective obligations under this Agreement, and such failure not being cured within thirty (30) days following notice thereof.

c. Effect of Termination of Expiration. Upon the termination or expiration of this Agreement, (i) PNM shall discontinue the performance of all of its duties and obligations under this Agreement and shall prepare and deliver a final invoice for all amounts accrued for tasks performed that have not yet been invoiced to Santa Fe, (ii) and Santa Fe shall promptly pay PNM all unpaid amounts owed and not disputed under this Agreement within thirty (30) days after the later of the effective date of termination or the date of the final invoice, (iii) each party shall either return or destroy (at the other party's election) the other party's Confidential Information (as such term is defined below), (iv) if either party is in default under this Agreement, the non-defaulting party may exercise any other remedies available at law or in equity, all of which will be cumulative, and (v) Sections 3, 4, 9, 10, and 14 will survive.

9. Confidentiality.

a. Definition. "Confidential Information" means information or materials provided by one party ("Discloser") to another party ("Recipient") which are in tangible form and labeled "confidential" or the like, or, information which a reasonable person

knew or should have known to be confidential.

b. Protection. Recipient may use Confidential Information of Discloser solely (A) to exercise its rights and perform its obligations under this Agreement; or (B) in connection with the parties' ongoing business relationship. Recipient will not use or disclose any Confidential Information of Discloser for any purpose not expressly permitted by this Agreement, and will disclose the Confidential Information of Discloser only to the employees or contractors of Recipient who have a need to know such Confidential Information for purposes of this Agreement and who are under a duty of confidentiality no less restrictive than Recipient's duty hereunder. Recipient will protect Confidential Information from unauthorized use, access, or disclosure in the same manner as Recipient protects its own confidential or proprietary Information of a similar nature but with no less than reasonable care.

c. Exceptions. Recipient's obligations under Section 10 with respect to any Confidential Information will terminate if Recipient can show by written records that such information: (A) was already known to Recipient at the time of disclosure by Discloser; (B) was disclosed to Recipient by a third party who had the right to make such disclosure without any confidentiality restrictions; (C) is, or through no fault of Recipient has become, generally available to the public; or (D) was independently developed by Recipient without access to, or use of, Discloser's Confidential Information. In addition, Recipient will be allowed to disclose Confidential Information to the extent that such disclosure is required by law or by the order of a court or similar judicial or administrative body, provided that Recipient notifies Discloser of such required disclosure promptly and in writing and cooperates with Discloser, at Discloser's request and expense, in any lawful action to contest or limit the scope of such required disclosure.

10. Hazardous Materials. PNM shall have no responsibility for detection, abatement, remediation, removal or disposal of any substance, material, waste, gas or particulate matter, hazardous substance, pollutant or contamination that is regulated, listed, or identified under any law or that becomes regulated, listed, or identified under any law (collectively, "Hazardous Materials"), except for any Hazardous Materials furnished or used by PNM in connection with the performance of the Company's duties and obligations hereunder.

11. Regulatory Reporting and Cooperation. The parties acknowledge that PNM is regulated by the New Mexico Public Regulation Commission and may be regulated by other governmental agencies including the Federal Energy Regulatory Commission, and that PNM may have certain reporting requirements related to the Company's duties and obligations hereunder. Santa Fe shall maintain detailed and accurate records of the costs and activities related to the performance of its obligations under this Agreement and shall provide such records, together with such other information or documents related to the LED Conversion Project as may be reasonably requested by PNM promptly upon request by PNM to the extent required in a regulatory proceeding. Santa Fe shall take such further actions and execute such further documents or instruments as may be reasonably requested by PNM that are reasonably related to PNM's regulatory compliance obligations with respect to the Company's duties and obligations hereunder.

DocuSign Envelope ID: 5CC028D8-C4C4-40B0-B28A-185D866C6585

12. Subcontractors. PNM may use subcontractors in the performance of the Company's obligations under this Agreement.

13. Inspection of Public Records. PNM acknowledges that, if a request for inspection of records under the New Mexico Inspection of Public Records Act (Sections 14-2-1 et seq., NMSA 1978) ("Act") is received for materials relating to this Agreement, and provided that such materials are not exempt under the Act ("Exempted Materials"), Santa Fe is required to disclose those records. Santa Fe shall make a good faith effort to determine what materials are Exempted Materials and to not disclose Exempted Materials. Santa Fe shall, unless prohibited under the Act, provide PNM with immediate notice before any disclosure to allow PNM an opportunity, within the Act's fifteen-day deadline, to initiate legal action to prevent the release of trade secret, proprietary data, or confidential data, or any other materials that to a reasonable person could be considered Exempted Materials, should PNM wish to do so. Notwithstanding anything to the contrary herein, with the exception of the Exempted Materials, Santa Fe shall not be responsible to PNM for any lawful disclosure of records required by the Act or an order of a court or other tribunal with jurisdiction over Santa Fe.

14. Joint Preparation. This Agreement shall be deemed to be jointly prepared. No provision in this Agreement shall be interpreted for or against any party because that party or its counsel drafted such provisions.

15. Time of Performance. This Agreement shall commence upon PNM beginning the work contemplated herein. PNM will endeavor to complete the LED Conversion Project within twelve (12) months of the signing of this Agreement, although the exact date of completion may fluctuate. If PNM requires more time to complete the work described herein, the parties will seek to amend this Agreement pursuant to section 21 herein. PNM shall notify the City as soon as possible and no later than sixty (60) days prior to expiration of this Agreement if it believes the work is not likely to be completed during the original twelve (12) month term of this Agreement.

16. Authorized Representatives. Each party shall designate and shall have designated at all times one representative authorized to act and administer this Agreement of behalf of the designating party (each, an "Authorized Representative") and shall provide to the other party and update, if necessary, the name, address, telephone number, e-mail address, facsimile, and any other pertinent contact information (collectively, "Contact information") for its Authorized Representative. A party may replace its Authorized Representative by written notice to the other party. If a party desires to designate any additional authorized representatives, it shall specify the nature of the communications for which each such representative is authorized to act on the designating party's behalf. The contact information for each of the Parties' current authorized representatives is set forth on Schedule "B" to this Agreement. Neither party's Authorized Representative shall have any authority to amend, modify, or waive this Agreement or any provision hereof, but the Authorized Representatives may provide information where expressly specified herein or to the extent reasonably necessary for the parties' respective performance of their obligations hereunder.

DocuSign Envelope ID: 5CC028D8-C4C4-40B0-B28A-185D866C8585

17. Appropriations. The City of Santa Fe has appropriated $525,000 for the completion of the LED Conversion Project. The terms of this Agreement, and any orders placed under it, are contingent upon sufficient appropriations and authorization being made by the Governing Body for the performance of this Agreement. If sufficient appropriations and authorization are not made by the Governing Body, this Agreement, and any orders placed under it, shall terminate upon written notice being given by the City to the Contractor. The City's decision as to whether sufficient appropriations are available shall be accepted by the Contractor and shall be final. If the City t unilaterally reduces funding, PNM shall have the option to terminate this Agreement within thirty (30) days of the notice of reduction in funding. The City shall remain responsible for prompt and full payment of all amounts due and owing prior to termination of this Agreement.

18. Independent Contractor. Neither PNM nor its employees are considered to be employees of Santa Fe for any purpose whatsoever. PNM is considered to be an independent contractor at all times in the performance of the services contemplated under this Agreement. PNM further agrees that neither it nor its employees are entitled to any benefits from Santa Fe under the provisions of the Workers' Compensation Act of the State of New Mexico, or to any of the benefits granted to employees of Santa Fe under the provisions of any merit system ordinance that may be now or hereinafter enacted or amended.

19. Insurance. Each party shall purchase and maintain insurance in accordance with such party's own internal policies and procedures. Each party shall provide proof of such insurance and renewals thereof upon request by the other party.

20. Compliance with Laws. Both parties shall comply with all applicable laws, ordinances, and codes of the Federal, State, and local governments in connection with the performance of their respective duties and obligations under this Agreement.

21. Amendments. Any amendments to this Agreement shall be in writing and mutually agreed upon by the Parties.

22. Construction and Severability. If any part of this Agreement is held to be invalid or unenforceable, such holding will not affect the validity or enforceability of any other part of this Agreement so long as the remainder of the Agreement is reasonably capable of completion.

23. Entire Agreement; Order of Precedence. This Agreement, including the Rate Tariff referenced above which has been incorporated herein by reference, contains the entire Agreement of the Parties relevant to the LED to Conversion Project and supersedes any and all other agreements or understandings, oral or written, whether previous to the execution hereof or contemporaneous herewith. In the event of any conflict between the terms of this Agreement and the Rate Tariff, the Rate Tariff will control.

24. Applicable Law. This Agreement shall be governed by and construed and enforced in accordance with the laws of the State of New Mexico.

25. Venue. The parties agree that the courts of the State of New Mexico sitting in Santa Fe County, New Mexico, will have exclusive jurisdiction to hear any action or judicial proceedings with respect to this Agreement. The parties each agree not to raise any objection to venue or any defense of inconvenient forum to any action or judicial proceedings brought by the other party or arising in connection with this Agreement brought in the aforementioned courts.

26. Dispute Resolution. If any question, dispute, difference, or claim arises out of or in connection with this Agreement, including any question regarding its existence, validity, performance, or termination (a "Dispute"), then either party may provide written notice to the other together with a sufficiently detailed explanation of the notifying party's position with respect to the Dispute, and the Authorized Representatives of the parties shall meet promptly and shall diligently attempt in good faith to resolve the Dispute for a period of not more than five days (the "Initial Meeting"). If the Authorized Representatives are unable to resolve such Dispute during the Initial Meeting, then each party shall designate one agent authorized to bind such party or with settlement authority, and such designated agents shall meet within ten days following the end of the Initial Meeting, or at a time mutually agreed upon by the Authorized Representatives, to attempt in good faith to resolve the Dispute and produce written terms of settlement for the Dispute (a "Settlement Agreement"). A Settlement Agreement executed by each designated agent shall serve as conclusive evidence of the resolution of such Dispute. the designated agents do not produce and execute the Settlement Agreement within twenty days after the date of the first meeting of the designated agents or within a longer period agreed to by each designated agent, then either party may, upon written notice to the other party, pursue all of its rights and remedies provided at law or in equity or otherwise in this Agreement.

27. Waiver of Jury Trial. Each party hereby waives, to the fullest extent permitted by applicable law, any right it may have to a trial by jury in respect of any proceeding brought to enforce or interpret this Agreement. Each party acknowledges that it and the other party have been induced to enter this Agreement by, among other things, the mutual waivers and certifications in this Section.

28. Force Majeure. PNM shall not be considered to be in default in respect to any obligation hereunder, if delays in or failure of performance shall be due to Force Majeure. The term "Force Majeure" shall mean any cause beyond the control of the Company and not due to its fault or negligence, including, but not limited to, acts of God, flood, earthquake, storm, fire, lightning, epidemic, pandemic, war, terrorist activity, riot, civil disturbance, sabotage, inability to obtain permits, licenses, and authorizations from any local, state, tribal
, or federal agency for any of the materials, supplies, equipment, or services required to be provided hereunder, fuel shortages, strikes or other labor disputes, delay associated with lack of skilled labor or resources in Santa Fe County, or restraint by court or public authority, any of which by exercise of due foresight PNM could not reasonably have been expected to avoid, and which by the exercise of due diligence it is unable to overcome. PNM shall not, however, be relieved of liability for failure of performance if such failure is due to removable or

remediable causes which it fails to remove or remedy with reasonable dispatch. Nothing contained herein, however, shall be construed to require PNM to prevent or settle a strike or other labor disputes against its will. The Party whose performance hereunder is so affected shall immediately notify the other Party of all pertinent facts and take all reasonable steps to promptly and diligently prevent such causes if feasible to do so, or to minimize or eliminate the effect thereof without delay. Santa Fe shall make no claim against PNM and hereby waives, releases and discharges any and all claims against the Company for additional compensation or Damages by reason of any delay or additional services due to a Force Majeure.

29. No Waiver. Nothing in this Agreement shall be construed as a waiver of either Party's legal rights, unless expressly addressed herein. Each party expressly reserves any legal rights and remedies to the extent that this Agreement is silent on a particular point.

30. Notices. Unless this Agreement specifically requires otherwise, any notice, demand, or request provided for herein or served, given, or made as contemplated hereby must be in writing and either (i) delivered in person, (ii) sent by email, (iii) sent by certified United States mail, postage prepaid, or (iv) sent by a nationally recognized overnight courier service that provides a receipt of delivery, in each case, to the other party's Authorized Representative. Notice given by personal delivery, mail, or overnight courier pursuant to this Section is effective upon receipt (or refusal of delivery) by the other party's Authorized Representative. Notice given by email pursuant to this Section is effective if sent to the email address of the other party's Authorized Representative that is set forth on **Schedule "B,"** regardless of acknowledgement of receipt.

31. Relationship of the Parties. Nothing contained in this Agreement will be construed in any manner as creating an agency, partnership, joint venture or any other type of relationship between PNM and Santa Fe. Neither party will have, nor will such party hold itself out as having, any authority whatsoever, whether express or implied, to assume, create, or incur any obligation or liability whatsoever, contractual or otherwise, on behalf of or in the name of the other party or to bind the other party in any other manner whatsoever.

32. Construction. The headings of the Sections of this Agreement are for convenience and are not to be used in interpreting this Agreement. As used in this Agreement, the word "including" means "including, without limitation."

33. New Mexico Tort Claims Act. Any liability in tort incurred by the City of Santa Fe in connection with this Agreement is subject to the immunities and limitations of the New Mexico Tort Claims Act, Section 41-4-1, et. seq. NMSA 1978, as amended. The City and its "public employees" as defined in the New Mexico Tort Claims Act, do not waive sovereign immunity, do not waive any defense and do not waive any limitation of liability pursuant to law. No provision in this Agreement modifies or waives any provision of the New Mexico Tort Claims Act.

IN WITNESS WHEREOF, Santa Fe and PNM have executed this Agreement as of the date first written above.

DocuSign Envelope ID: 5CC028D8-C4C4-40B0-B28A-185D866C6585

CITY OF SANTA FE

By: Alan Webber (Feb 29, 2024 15:17 MST)

Alan Webber
Mayor, City of Santa Fe, New Mexico

Attest:

Geralyn Cardenas (Feb 29, 2024 15:43 MST)

Geralyn Cardenas, Interim City Clerk
GB MTG 02/28/24 XIV

City Attorney's Office:

Marcos Martinez
Marcos Martinez (Jan 12, 2024 13:36 MST)

Senior Assistant City Attorney

Approved for Finances:

Emily K. Oster
Emily K. Oster (Feb 15, 2024 17:35 MST)

Emily Oster, Finance Director

PUBLIC SERVICE COMPANY OF NEW MEXICO

By: DocuSigned by: 2/14/2024
80E1D44E9B1C4E0...

Mike Mertz
PNM Vice President, New Mexico Operations

DocuSign Envelope ID: 5CC028D8-C4C4-40B0-B28A-185D866C6585

SCHEDULE "A"

AGREEMENT FOR THE CONVERSION OF STREETLIGHTS OWNED BY THE PUBLIC SERVICE COMPANY OF NEWMEXICO

PNM's Existing Streetlights by Wattage	Units of Street-lights by Wattage	Installation Allowances in 17th Revised Rate No.20	LED Operational Substitutes Per Appendix A to 17th Revised Rate No. 20
IOOWHPS	983	$160.00	**Operational Substitute No. 1** ATBS PIO MVOLT R2 NL P7 XL, 40W, 4000K ERL1 0 05B3 40 AGRAY, 39W, 4000K VERD-C016-D-U-T2-4N7-10MSP-AP,39W, 4000K ATBS PIO MVOLT R2 3K NL P7 XL, 40W, 3000K ERL1 0 05B3 30 A GRAY, 39W, 3000K VERD-C016-D-U-T2-7030-4N7-10MSP-AP, 39W, 3000K ATBS P10 MVOLT R2 27K XL NL P7 VR RFD321303, 40W, 2700K ERL1 0 05B5 27 A GRAY, 37W, 2700K VERD-C016-D-U-T2-8027-4N7-10MSP-AP, 39W, 2700K
250WHPS	161	$480.00	**Operational Substitute No. 2** ATBM P30 MVOLT R3 NL XL P7, 118W, 4000K ERL2 0 16C3 40 A GRAY, 120W, 4000K VERD-C02H-D-U-T3-4N7-10MSP-AP, 120W, 4000K ATBM P30 MVOLT R3 3K NL XL P7, 118W, 3000K ERL2 0 16C3 30 A GRAY, 120W, 3000K VERD-C02H-D-U-T3-7030-4N7-10MSP-AP, 120W, 3000K ATBM P30 480 R3 NL P7 XL, 118W, 4000K
400W HPS	62	$1,040.00	**Operational Substitute No. 3** ATBL F MVOLT R3 NL P7, 259W, 4000K ERL2 0 28C3 40 AGRAY, 251W, 4000K VERDM-A04-D-U-T3-4N7-10MSP-AP, 247W, 4000K ATBL FM VOLT R3 3K NL P7, 259W, 3000K ERL2 0 28C3 30 AGRAY, 251W, 3000K VERDM-A04-D-U-T3-7030-4N7-10MSP-AP, 247W, 3000K ATBL F 480 R3 NL P7 XL, 259W, 4000K

DocuSign Envelope ID: 5CC028D8-C4C4-40B0-B28A-185D866C6585

175W MV	838	$160.00	**Operational Substitute No. 1** ATBS PIO MVOLT R2 NL P7 XL, 40W, 4000K ERL1 0 05B3 40 AGRA Y, 39W, 4000K VERD-CO 16-D-U-T2-4N7- 10MSP-AP,39W, 4000K ATBS PIO MVOLT R2 3K NL P7 XL, 40W, 3000K ERL1 0 05B3 30 A GRAY, 39W, 3000K VERD-C016-D-U-T2-7030-4N7-10MSP-AP, 39W, 3000K ATBS P10 MVOLT R2 27K XL NL P7 VR RFD321303, 40W, 2700K ERL1 0 05B5 27 A GRAY, 37W, 2700K VERD-C016-D-U-T2-8027-4N7-10MSP-AP. 39W. 2700K

DocuSign Envelope ID: 5CC028D8-C4C4-40B0-B28A-185D866C6585

400WMV	13	$480.00	**Operational Substitute No. 2** ATBM P30 MVOLT R3 NL XL P7, 118W, 4000K ERL2 0 16C3 40 A GRAY, 120W, 4000K VERD-C02H-D-U-T3-4N7-10MSP-AP, 120W, 4000K ATBM P30 MVOLT R3 3K NL XL P7, 118W, 3000K ERL2 0 16C3 30 A GRAY, 120W, 3000K VERD-C02H-D-U-T3-7030-4N7-10MSP-AP, 120W, 3000K ATBM P30 480 R3 NL P7 XL, 118W, 4000K

DocuSign Envelope ID: 5CC028D8-C4C4-40B0-B28A-185D866C6585

SCHEDULE "B"

Authorized Representatives

The Contact Information for the Authorized Representatives is initially as follows:

Public Service Company of New Mexico

Sharon Martinez
Large Construction Project Manager,
NMOPS Projects and Program Management
2401 Aztec NE
MSZ200
Albuquerque, New Mexico 87107
sharon.martinez@pnm.com
505-241-4515office
505-238-5409 cell

Manuel Quintana
Senior Strategic Account Manager
PNM Account Management
414 Silver Ave. SW
Albuquerque, NM 87102
Manuel.quintana@pnm.com
505-241-4716 office
505-249-3105

City of Santa Fe, New Mexico

Regina Wheeler,
Public Works Director
PO Box 909
500 Market St. Suite 200
Santa Fe, New Mexico 87504-0909
(505) 955-6622

DocuSign Envelope ID: 5CC028D8-C4C4-40B0-B28A-185D866C6585

Schedule C
City of Santa Fe Specified Operational Substitutes

City of Santa Fe Specified Operational Substitutes				
PNM's Existing Streetlights by Wattage	Units of PNM's Streetlights by Wattage	Number of Lights Subject to Conversion and Light Type	Installation Allowances in 17th Revised Rate No.20	City Specified LED Operational Substitutes Per Appendix A to 17th Revised Rate No. 20
100WHPS	983		$160.00	ATBS P10 MVOLT R2 27K XL NL P7 VR RFD321303, 40W, 2700K
250WHPS	161		$480.00	ATBM P30 MVOLT R3 3K NL XL P7, 118W, 3000K
400WHPS	62		$1,040.00	ATBL FM VOLT R3 3K NL P7, 259W, 3000K
175WMV	838		$160.00	ATBS P10 MVOLT R2 27K XL NL P7 VR RFD321303, 40W, 2700K
400WMV	13		$480.00	ATBM P30 MVOLT R3 3K NL XL P7, 118W, 3000K

City of Santa Fe
New Development
Roadway Lighting Guidelines

Rev 1.0 February 2023

SUMMARY

1. Roadway luminaires must meet the following requirements:

Roadway Type	Correlated Color Temperature (Kelvin)	Input Wattage Range (W)	Nominal Lumen Output (lumen) +/- 10%	Minimum Color Rendering Index	IES Distribution	Visual Comfort Refractor	IES TM-15 Backlight, Uplight, and Glare Rating		
							B	U	G
Residential	2700K	28-45	4,000	70	Type 2	Required	1	0	1
Local/Collector	3000K	90-100	8,900	70	Type 2 or Type 3	Required	2	0	2
Major	3000K	190-200	20,000	70	Type 2 or Type 3	Not required	3	0	3

Luminaires must be fitted with a Ubicquia Ubicell control. Full specifications are in Appendix B.

2. Pole and arm composition varies by area in the City of Santa Fe. To expedite approval, seek recommendations based on proposed construction location from the City's street lighting maintenance provider, Dalkia Energy Solutions.

3. Submit a package with the following components
   a. Plans indicating the location, type, and height of both building and ground mounted luminaires; and
   b. Specification sheets for proposed luminaires, arms, poles, foundations, supports, shielding devices, and smart controls; and
   c. Photometric data: provide photometric showing footcandles on the ground or luminaire .ies files with .dwg of proposed layouts. (Examples included in Appendix A)

Submit package to City Traffic Engineer and the City's street lighting maintenance provider, Dalkia Energy Solutions. A response will be provided within five business days.

Jeanne Wolfenbarger <jawolfenbarger@santafenm.gov>
Matt O'Brien <matt.obrien@dalkiasolutions.com>

Appendix A:

EXAMPLE ROADWAY PHOTOMETRICS

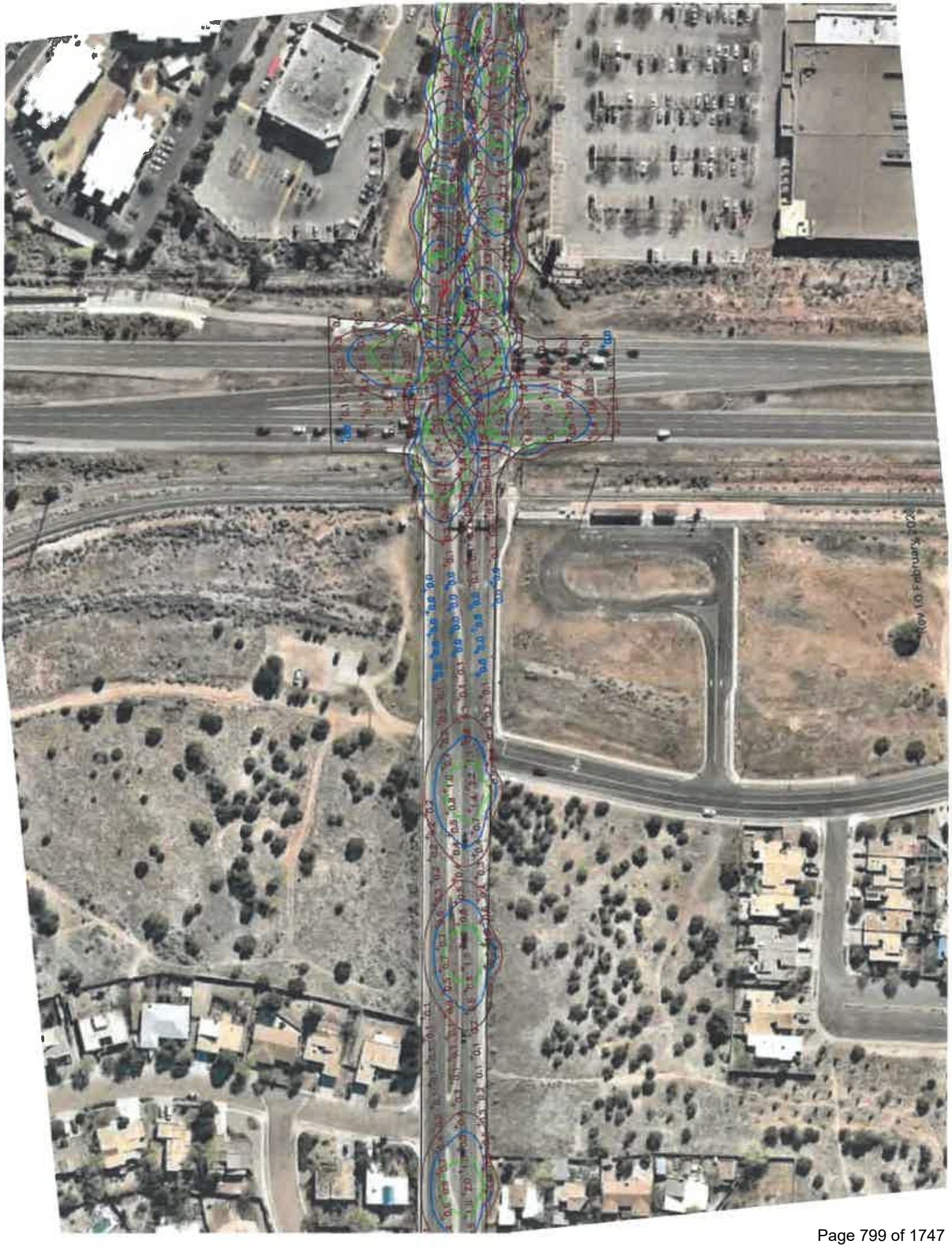



Current View

Appendix B:

COMMUNITY-GUIDED SMART STREET LIGHTING DESIGN SPECIFICATIONS

Rev 1.0 February 2023

City of Santa Fe

Department of Public Works

Community-Guided Smart Street Lighting Design Specifications

The City of Santa Fe seeks to convert its existing street lighting assets to smart LED technology in order to "reduce light pollution, reduce or prevent glare, reduce or prevent light trespass, conserve energy, promote a sense of safety and security, and ensure aesthetically appropriate outdoor lighting in keeping with the character of Santa Fe." - (City of Santa Fe Ord. No. 2011-37 § 10)

Following the Community-Guided Design phase outlined in its Global Management Contract with Dalkia, the Department of Public Works is recommending to the Governing Body the smart lighting design summarized in the below table and described with detailed specifications in the following pages.

Roadway Type	Correlated Color Temperature (Kelvin)	Input Wattage Range (W)	Nominal Lumen Output (lumen) +/- 10%	Minimum Color Rendering Index	IES Distribution	Visual Comfort Refractor	IES TM-15 Backlight, Uplight, and Glare Rating		
							B	U	G
Residential	2700K	28-45	4,000	70	Type 2	Required	1	0	1
Local/Collector	3000K	90-100	8,900	70	Type 2 or Type 3	Required	2	0	2
Major	3000K	190-200	20,000	70	Type 2 or Type 3	Not required	3	0	3

Roadway Type	Number of Fixtures	Percentage of Total
Residential	3,137	58%
Local/Collector	1,578	29%
Major	697	13%

In order to develop this Community-Guided Smart Lighting Design Plan, Dalkia worked with multiple stakeholders, including PNM, and compiled various sets of data; evaluated various products and performed a comprehensive set of photometric analyses; gathered community feedback from multiple channels; and combined all analyses into this recommendation. The final plan is designed to be actionable and to provide results in line with the Sustainable Santa Fe 25-Year Plan and the City of Santa Fe's expectations. The City of Santa Fe and Dalkia will work together to develop a dimming strategy to further increase energy savings and dark-sky protection, aligned with dark-sky best practices.

Part A: STREET LIGHTING LIGHT EMITTING DIODE (LED) LUMINAIRE SPECIFICATIONS

1.0 REFERENCES

The publications listed below form a part of this specification to the extent referenced. Publications are referenced within the text by their basic designation only. Versions listed shall be superseded by updated versions as they become available.

1.1 American National Standards Institute (ANSI)
- A. C136.2 (Most current), American National Standard for Roadway and Area Lighting Equipment—Luminaire Voltage Classification
- B. C136.10-2010 (Most current), American National Standard for Roadway and Area Lighting Equipment Locking-Type Photocontrol Devices and Mating Receptacle Physical and Electrical Interchangeability and Testing
- C. C136.15-2011 (Most current), American National Standard for Roadway and Area Lighting Equipment Luminaire Field Identification
- D. C136.25-2009 (Most current), American National Standard for Roadway and Area Lighting Equipment Ingress Protection (Resistance to Dust, Solid Objects and Moisture) for Luminaire Enclosures
- E. C136.31-2010 (Most current), American National Standard for Roadway Lighting Equipment – Luminaire Vibration.
- F. C136.41

1.2 American Society for Testing and Materials International (ASTM)
- A. B117-09 (Most current), Standard Practice for Operating Salt Spray (Fog) Apparatus
- B. D1654-08 (Most current), Standard Test Method for Evaluation of Painted or Coated Specimens Subjected to Corrosive Environments
- C. D523-08 (Most current), Standard Test Method for Specular Gloss
- D. G154-06 (Most current), Standard Practice for Operating Fluorescent Light Apparatus for UV Exposure of Nonmetallic Materials

1.3 Council of the European Union (EC)
- A. RoHS Directive 2002/95/EC, on the restriction of the use of certain hazardous substances in electrical and electronic equipment

1.4 Illuminating Engineering Society of North America (IESNA or IES)
- A. DG-4-03 (Most current), Design Guide for Roadway Lighting Maintenance
- B. HB-10-11 (Most current), IES Lighting Handbook, 10th Edition
- C. LM-50-99 (Most current), IESNA Guide for Photometric Measurement of Roadway Lighting Installations
- D. LM-61-06 (Most current), IESNA Approved Guide for Identifying Operating Factors Influencing Measured Vs. Predicted Performance for Installed Outdoor High Intensity Discharge (HID) Luminaires
- E. LM-79-08 (Most current), IESNA Approved Method for the Electrical and Photometric Measurements of Solid-Sate Lighting Products
- F. LM-80-08 (Most current), IESNA Approved Method for Measuring Lumen Maintenance of LED Light Sources
- G. RP-8-18 (Most current), ANSI / IESNA American National Standard Practice for Roadway Lighting

H. RP-16-10 (Most current), ANSI/IES Nomenclature and Definitions for Illuminating Engineering
I. TM-3-95 (Most current), A Discussion of Appendix E - "Classification of Luminaire Lighting Distribution," from ANSI/IESNA RP-8-83
J. TM-15-11 (Most current), Luminaire Classification System for Outdoor Luminaires
K. TM-21-11 (Most current), Projecting Long Term Lumen Maintenance of LED Light Sources

1.5 National Electrical Manufacturers Association (NEMA)
A. ANSI/NEMA/ANSLG C78.377-2008 (or latest), American National Standard for the Chromaticity of Solid State Lighting Products

1.6 National Fire Protection Association (NFPA)
A. 70 – National Electrical Code (NEC)

1.7 Underwriters Laboratories (UL)
A. 1449, Surge Protective Devices
B. 1598, Luminaires.
C. 8750, Light Emitting Diode (LED) Equipment for Use in Lighting Products LED Roadway Specification

1.8 CSA
1. 1598, Luminaires

2.0 GENERAL CONSTRUCTION

2.1 Shall be compliant with CSA C22.2 No. 250.0-08 – UL 1598 Harmonized Std.
2.2 Luminaire housing to be fabricated from die cast aluminum low copper content alloy.
A. Luminaire housing to act as passive heat sink for LED Array.
B. Housing to be designed in such a manner that debris build-up with-in "heat-fin" structure will not significantly impact lamp lumen depreciation (LLD).
C. Luminaire finish and casting to be tested to ASTM B117 salt fog, and must maintain a scribe creepage rating of 8 per ASTM D1654 after 5000 hours.
D. Access to electrical compartment shall be tool-less by means of a thumb screw.
E. Tool-less access should accommodate user wearing electrical gloves.

2.3 LED light engine
A. Shall be IP66 rated (provide 0% uplight and restrict backlight to within sidewalk depth).
B. Lens shall be created from borosilicate glass.

2.4 Luminaire Attachment
A. Luminaire shall be able to attach to 1 ¼" and/or 2" IPS schedule 40 mast arms (1 5/8" to 2 3/8" OD).
B. Luminaire shall be designed to be able to tilt +/- 5 degrees from horizontal.
C. Luminaire shall be designed to withstand 3G vibration testing prescribed in ANSI C136.31.
D. Luminaire shall include internal integral leveling bubble to assist in the installation.

2.5 Luminaire Markings
A. Shall have external wattage label affixed on underside of luminaire to be seen from ground per ANSI C136.15.
B. Luminaire shall have internal label indicating manufacturer's name, product name, input voltage and date of manufacture.

2.6 Wildlife shield shall be a cast in feature (not a separate component).

3.0 ELECTRICAL

3.1 All electrical components shall be terminated through the use of quick disconnect couplings.

- A. There shall not be any wire nuts supplied in the luminaire
- B. All luminaires shall be equipped with a 3 station tunnel style terminal block for terminating supply wire.
  1. Terminal block shall accommodate up to 6 AWG conductors.
  2. For ease of installation, the terminal block shall be positioned in such a manner that supply wires do not need to bent or re-routed around components to make electrical termination.
- C. Luminaire shall provide means to protect LED driver and LED lighting array from electrical transients caused by electrical storms or capacitor switching by means of surge protection device.
  1. Surge Protection Device (SPD) shall be UL1449 recognized.
  2. SPD shall be 3 wire and provide both common and differential mode protection.
  3. SPD must have an inductive filter circuit that reduces the amount of energy passed thru to electronics during a surge event.
  4. Surge protection device shall be rated to protect the luminaire up to 10kV/5kA combination wave surges in accordance with ANSI C136.2 (Most Current).
  5. Surge protection shall be thermally fused.
  6. Failure mode of surge protection is to leave luminaire off.
- D. LED Driver shall meet the following minimum requirements
  1. LED Driver shall have a minimum power factor of 90% at full load.
  2. LED Driver THD shall be less than 20% at full load.
  3. LED Driver shall comply with the requirements of UL, CSA, FCC47 subpart 15
  4. LED Driver maximum case temperature shall not be exceeded when luminaire is operating in a 40C ambient.
  5. LED Driver shall be RoHS compliant
  6. LED Driver shall have in ingress protection rating IP66.
- E. Photocontrol receptacle shall comply with ANSI C136.10 for standard 7 PIN configurations. When using smart controls receptacle shall comply with ANSI C136.41.

4.0 LIFE

4.1 Component rated life shall be a minimum of 20 years (or 100,000 hours) when operating in a continuous 25C ambient.

4.2 The design life of the LED array (based on LM80/TM21) shall be defined as L80 at 98,000 hours operation in an ambient of 25C.

5.0 WARRANTY

5.1 Luminaire shall be warranted to be free from manufacturing defects for a minimum period of 10 years.

6.0 LED LUMINAIRE PERFORMANCE

6.1 Residential Roadway LED Luminaires

- A. Correlated Color Temperature (CCT) shall be nominally rated at 2700 Kelvin CCT.
- B. Luminaire input wattage shall be between 28 watts and 45 watts.

C. Luminaire nominal lumen output shall be between 4000 lumens and 5000 lumens.
D. Minimum Color Rendering Index (CRI) shall be 70.
E. Luminaire shall have a distribution pattern consistent with IES RP-8-18 Type II Distribution.
F. Luminaire shall have a maximum BUG rating per IES TM-15 of B1-U0-G1.
G. Product shall have a visual comfort glare reduction refractor.

6.2 Local/Collector Roadway LED Luminaires

A. Correlated Color Temperature (CCT) shall be nominally rated at 3000 Kelvin CCT.
B. Luminaire input wattage shall be between 90 watts and 120 watts.
C. Luminaire nominal lumen output shall be between 8000 lumens and 12000 lumens.
D. Minimum Color Rendering Index (CRI) shall be 70.
E. Luminaire shall have a distribution pattern consistent with IES RP-8-18 Type II or Type III Distribution.
F. Luminaire shall have a maximum BUG rating per IES TM-15 of B2-U0-G2.
G. Product shall have a visual comfort glare reduction refractor.

6.3 Major Roadway LED Luminaires

A. Correlated Color Temperature (CCT) shall be nominally rated at 3000 Kelvin CCT.
B. Luminaire input wattage shall be between 190 watts and 260 watts.
C. Luminaire nominal lumen output shall be between 20000 lumens and 24000 lumens.
D. Minimum Color Rendering Index (CRI) shall be 70.
E. Luminaire shall have a distribution pattern consistent with IES RP-8-18 Type II or Type III Distribution.
F. Luminaire shall have a BUG rating per IES TM-15 of B3-U0-G3.
G. Product shall be Design Lights Consortium (DLC) qualified.

Part 2: SMART CONTROLS

One of the use-cases for smart controls technology on the city's street lighting infrastructure is dimming capability. Dimming control will allow luminaires to be adjusted as an additional mechanism to increase energy savings and dark-sky protection.

7.0 Smart Node Technology

- 7.1 Node shall have twist-lock controller compatibility with 3, 5 or 7 pin NEMA socket receptacle.
- 7.2 Node shall utilize AES 128/256-bit encryption in its communication security.
- 7.3 Node shall function with a 0-10V, DALI or DALI2 driver and will provide a dimming circuit with a range of 0% to 100%.
- 7.4 Node shall have a single SKU to handle both low voltage and high voltage.
- 7.5 Node shall have a minimum of 10KV/5KA power surge protection and a single power supply range for 90V to 506V line voltage.
- 7.6 Node shall have a minimum IP66 rating to withstand harsh weather conditions with a -30C to +70C (-22F to +158F) operating temperature range.
- 7.7 Node shall utilize LTE CAT-1 cellular communication per module and provide advanced lighting and IoT functions and services to include, but not limited to, Tilt, Scheduling, Dynamic Dimming, Asset Management, GPS, Outage Notification, Traffic Trends, Beaconing, and Utility Grade Power Metering accuracy of ANSI C12.20 Class + or - 0.5.
- 7.8 Node must have a 10-year warranty and include 10 years of Software as a Service and connectivity.

Appendix C:

EXISTING CITY EQUIPMENT SPECIFICATIONS SHEETS

LUMINAIRE
SPECIFICATIONS SHEETS

Autobahn Series ATBS
Roadway & Security Lighting

Consistent with LEED® goals & Green Globes™ criteria for light pollution reduction

PRODUCT OVERVIEW

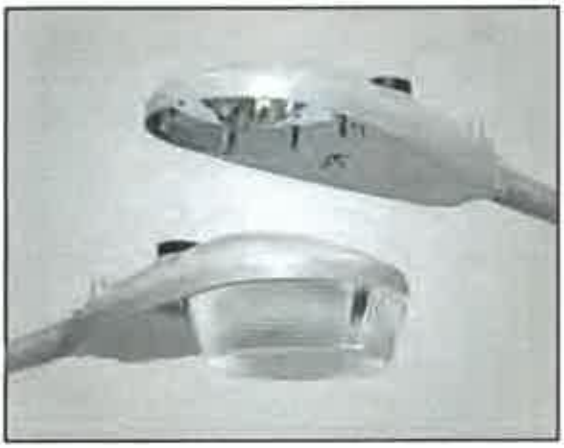

Applications:

- Residential streets
- Parking lots
- General security lighting

DIMENSIONS

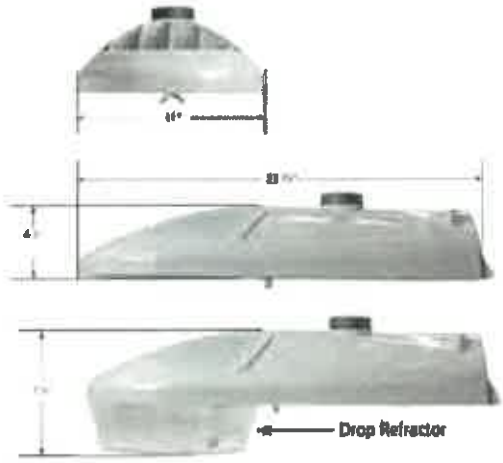

Effective Projected Area (EPA) The EPA for the ATBS is 0.3 sq. ft.,
Approx. Wt. = 12 lbs. (5 kg)

STANDARDS

DesignLights Consortium® (DLC) qualified product. Not all versions of this product may be DLC qualified. Please check the DLC Qualified Products List at www.designlights.org/QPL to confirm which versions are qualified.

Color temperatures of ≤ 3000K must be specified for International Dark-Sky Association certification.

Rated for -40°C to 40°C ambient
CSA Certified to U.S. and Canadian standards
Complies with ANSI: C136.2, C136.10, C136.14, C136.31, C136.15, C136.37

Features:

OPTICAL

Same Light: Performance is comparable to 100W – 200W HPS and up to 175W Mercury Vapor roadway and security lighting luminaires.

White Light: Correlated color temperature - 4000K, 70 CRI minimum, 3000K, 70 CRI minimum or optional 5000K, 70 CRI minimum.

IP66 rated borosilicate glass optics ensure longevity and minimize dirt depreciation. Unique IP66 rated LED light engines provide 0% uplight and restrict backlight to within sidewalk depth, providing optimal application coverage and optimal pole spacing.

Available distributions are Type II, III, and V roadway distributions. When used with the optional acrylic refractor the unit provides approximately 10% uplight and increased vertical foot-candles

ELECTRICAL

Expected Life: LED light engines are rated >100,000 hours at 25°C, L70. Electronic driver has an expected life of 100,000 hours at a 25°C ambient.

Lower Energy: Saves an expected 40-60% over comparable HID luminaires.

Standard surge protection is 20kV/10kA "Extreme Level" per ANSI C136.2. An optional MOV pack provides 10kV/5kA "Enhanced Level".

MECHANICAL

Includes standard AEL lineman-friendly features such as tool-less entry, 3 station terminal block and quick disconnects. Bubble level located inside the electrical compartment for easy leveling at installation.

Rugged die-cast aluminum housing and door are polyester powder-coated for durability and corrosion resistance. Rigorous five-stage pre-treating and painting process yields a finish that achieves a scribe creepage rating of 8 (per ASTM D1654) after over 5000 hours exposure to salt fog chamber (operated per ASTM B117).

Mast arm mount is adjustable for arms from 1-1/4" to 2" (1-5/8" to 2-3/8" O.D.) diameter. The 2 – bolt clamping mechanism provides 3G vibration rating per ANSI C136.31.

The Wildlife shield is cast into the housing (not a separate piece).

CONTROLS

NEMA 3 pin photocontrol receptacle is standard, with the Acuity designed ANSI standard 7 pin receptacles optionally available.

Premium solid state locking-style photocontrol – PCSS (10 year rated life) Extreme long life solid state locking-style photocontrol – PCL1 (20 year rated life)

Optional onboard Adjustable Output module allows the light output and input wattage to be modified to meet site specific requirements, and also can allow a single fixture to be flexibly applied in many different applications.

Note: Actual performance may differ as a result of end-user environment and application.
Specifications subject to change without notice.

© 2014-2021 Acuity Brands Lighting, Inc. Rev. 04/08/21 ATBS

Rev 1.0 February 2023

AEL American Electric Lighting

Autobahn Series ATBS
Roadway & Security Lighting

ORDERING INFORMATION

Series	Performance Packages	Voltage	Optics
ATBS Autobahn LED Roadway & Security	P10 5,500 lumens P20 6,800 lumens P30 8,300 lumens P40 9,400 lumens P50 10,800 lumens P60[4] 11,850 lumens	MVOLT Multi-volt, 120-277V 347 347V 480 480V	R2 Roadway Type II R3 Roadway Type III R5 Roadway Type V D3 Type III, Drop Refractor included D5 Type V, Drop Refractor included

Options

Color Temperature (CCT)
- (Blank) 4000K CCT, 70 CRI Min.
- 3K 3000K CCT, 70 CRI Min.
- 5K 5000K CCT, 70 CRI Min.

Paint
- Blank Gray (Standard)
- BK Black
- WH White
- BZ Bronze

Surge Protection
- Blank Standard 20kV/10kA SPD
- MP MOV Pack 10kV/5kA

Misc.
- HS House Side Shield
- NL NEMA Label
- XL Not CSA Certified
- VR[3] Visual Comfort Optic
- UMR-XX 8" Horizontal Arm for Round Pole, Painted to match Fixture
- UMS-XX 8" Horizontal Arm for Square Pole, Painted to match Fixture
- UMR-GALV 8" Horizontal Arm for Round Pole, Painted to match Fixture
- UMS-GALV 8" Horizontal Arm for Square Pole, Painted to match Fixture

Controls
- (Blank) 3 Pin NEMA Photocontrol Receptacle
- NR[1] No Photocontrol Receptacle
- DMF[2] 0V-10V Dimmable Driver
- P7 7 Pin Photocontrol Receptacle (dimmable driver included)
- PCSS[1] DTL DSS Photocontrol
- PCL1[1] DTL DLL Photocontrol 120-277V
- AO Field Adjustable Output
- SH Shorting Cap

Packages
- (Blank) Standard Pack
- JP Job Pack (54/pallet)

Install Packages
- PKSS DTL DSS Photocontrol
- PKGL DTL DLL Photocontrol

Packages ship with selected photocontrol, 24", 1 ¼" diameter arm, 5' of prewire and mounting hardware

Accessories
- ATBSREF Drop Refractor for field installation
- ATBSHSS House Side Shield for field installation
- ATBSLTS Light Trespass Shield for field installation
- ATBS LOUVER KIT Louver Kit for field installation
- ATBSVR-XX Visual Comfort Refractor and painted skirt for field installation

Notes
1. Not available with Install Packages.
2. Not available with AO option.
3. Not available with D3 or D5 option.
4. Not available with 347V and 480V supply voltage options.

© 2014-2021 Acuity Brands Lighting, Inc. All Rights Reserved. Rev. 04/08/21

Warranty Five-year limited warranty. Complete warranty terms located at: www.acuitybrands.com/support/customer-support/terms-and-conditions
Actual performance may differ as a result of end-user environment and application.
All values are design or typical values, measured under laboratory conditions at 25 °C.
Specifications subject to change without notice.

Please contact your sales representative for the latest product information.

PERFORMANCE PACKAGE

ATBS

Performance Package	Distribution	Input Watts	3K (3000K CCT, 70 CRI)					4K/5K (4000K/5000K CCT, 70 CRI)					LLD @ 25°C		
			Lumens	LPW	B	U	G	Lumens	LPW	B	U	G	50k Hours	75k Hours	100k Hours
P10	R2	40	5,360	134	1	0	2	5,577	139	1	0	2	0.92	0.89	0.85
	R3		5,287	132	1	0	1	5,524	138	1	0	1			
	R5		5,576	139	3	0	1	5,758	144	3	0	1			
	D3		4,963	124	1	3	3	5,163	129	1	3	3			
	D5		5,372	134	2	3	3	5,590	140	2	3	3			
P20	R2	50	6,707	134	1	0	2	6,909	138	1	0	2	0.92	0.89	0.85
	R3		6,667	134	2	0	2	6,760	135	2	0	2			
	R5		6,926	139	3	0	1	7,106	142	3	0	1			
	D3		6,496	130	2	3	4	6,244	125	1	3	4			
	D5		7,032	141	3	4	4	7,217	146	3	4	4			
P30	R2	60	8,092	135	2	0	2	8,067	134	1	0	1	0.92	0.89	0.85
	R3		7,971	133	2	0	2	8,328	139	2	0	2			
	R5		8,470	141	3	0	2	8,760	146	3	0	2			
	D3		7,491	125	2	3	4	7,795	130	2	3	4			
	D5		8,110	135	3	4	4	8,438	141	3	4	4			
P40	R2	70	9,138	131	2	0	2	9,533	136	2	0	2	0.92	0.89	0.85
	R3		9,136	131	2	0	2	9,355	134	2	0	2			
	R5		9,868	141	3	0	2	9,710	139	3	0	2			
	D3		8,460	121	2	3	4	8,802	126	2	3	5			
	D5		9,158	131	3	4	5	9,529	136	3	4	5			
P50	R2	82	10,628	130	2	0	3	10,829	132	2	0	3	0.92	0.89	0.85
	R3		10,624	130	2	0	2	10,826	132	2	0	2			
	R5		11,450	140	4	0	2	11,161	136	4	0	2			
	D3		10,143	124	2	4	5	10,553	129	2	4	5			
	D5		10,651	130	3	4	5	11,082	135	3	4	5			
P60	R2	92	11,050	120	2	0	3	11,848	129	2	0	3	0.92	0.89	0.85
	R3		10,911	119	2	0	2	11,862	129	2	0	2			
	R5		12,199	133	4	0	2	12,756	139	4	0	2			
	D3		10,230	111	2	4	5	10,644	116	2	4	5			
	D5		11,074	120	3	4	5	11,523	125	3	4	5			

ATBS with VR

Performance Package	Distribution	Input Watts	3K (3000K CCT, 70 CRI)					4K/5K (4000K/5000K CCT, 70 CRI)					LLD @ 25°C		
			Lumens	LPW	B	U	G	Lumens	LPW	B	U	G	50k Hours	75k Hours	100k Hours
P10	R2 with VR	40	4,450	111	1	0	1	4,561	114	1	0	1	0.92	0.89	0.85
	R3 with VR		4,273	107	1	0	1	4,605	115	1	0	1			
	R5 with VR		4,539	113	2	0	1	4,679	117	2	0	1			
P20	R2 with VR	50	5,491	110	1	0	1	5,550	111	1	0	1	0.92	0.89	0.85
	R3 with VR		5,379	108	1	0	1	5,582	112	2	0	1			
	R5 with VR		5,647	113	2	0	1	5,692	114	2	0	1			
P30	R2 with VR	60	6,479	108	2	0	1	6,530	109	2	0	1	0.92	0.89	0.85
	R3 with VR		6,400	107	2	0	1	6,564	109	2	0	1			
	R5 with VR		6,703	112	3	0	1	6,693	112	2	0	1			
P40	R2 with VR	70	7,307	104	2	0	1	7,561	108	2	0	1	0.92	0.89	0.85
	R3 with VR		7,347	105	2	0	1	7,638	109	2	0	1			
	R5 with VR		7,693	110	3	0	1	7,749	111	3	0	1			
P50	R2 with VR	82	8,552	104	2	0	2	8,711	106	2	0	2	0.92	0.89	0.85
	R3 with VR		8,494	104	2	0	1	8,814	107	2	0	1			
	R5 with VR		8,895	108	3	0	1	8,911	109	3	0	1			
P60	R2 with VR	92	8,999	98	2	0	2	9,815	107	2	0	2	0.92	0.89	0.85
	R3 with VR		8,899	97	2	0	1	9,857	107	2	0	2			
	R5 with VR		9,309	101	3	0	1	10,256	111	3	0	1			

Note: Individual fixture performance may vary. Specifications subject to change without notice.

© 2014-2021 Acuity Brands Lighting, Inc. All Rights Reserved.

Warranty Five-year limited warranty. Complete warranty terms located at: www.acuitybrands.com/support/customer-support/terms-and-conditions
Actual performance may differ as a result of end-user environment and application.
All values are design or typical values, measured under laboratory conditions at 25 °C.
Specifications subject to change without notice.

Please contact your sales representative for the latest product information.

UMR POLE ADAPTOR

RECOMMENDED FOR USE WITH POLES OF 4" DIAMETER OR SMALLER

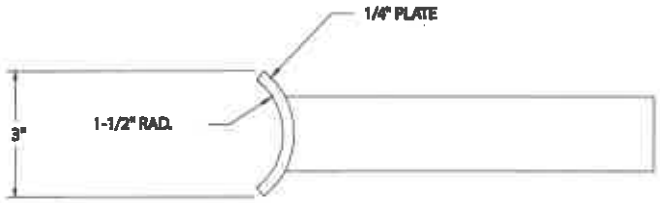

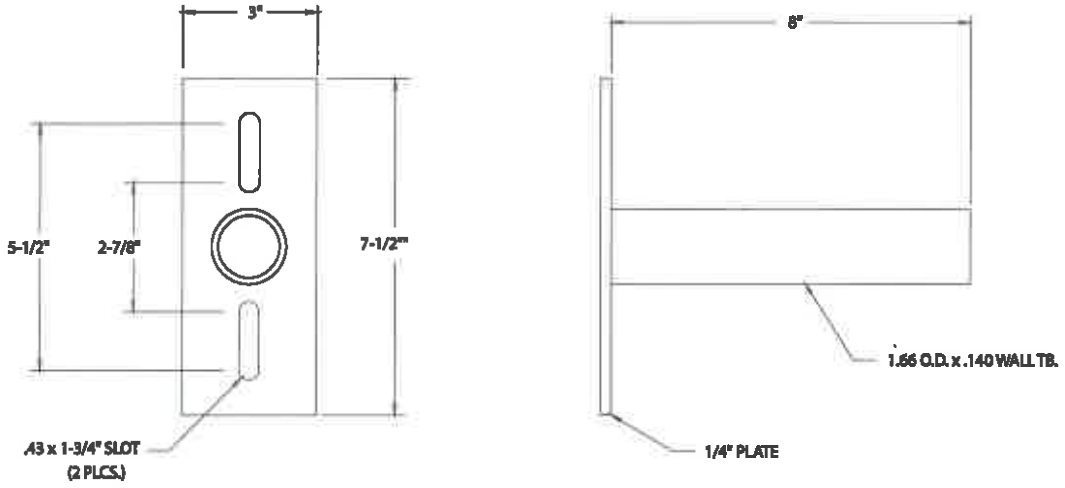

UMS POLE ADAPTOR

© 2014-2021 Acuity Brands Lighting, Inc. All Rights Reserved.

Warranty Five-year limited warranty. Complete warranty terms located at:
www.acuitybrands.com/support/customer-support/terms-and-conditions
Actual performance may differ as a result of end-user environment and application.
All values are design or typical values, measured under laboratory conditions at 25 °C.
Specifications subject to change without notice.

Please contact your sales representative for the latest product information.

Autobahn Series ATBM
Roadway

Consistent with LEED® goals & Green Globes™ criteria for light pollution reduction

PRODUCT OVERVIEW



Applications:

- Residential streets
- Parking lots
- High speed roadways

DIMENSIONS

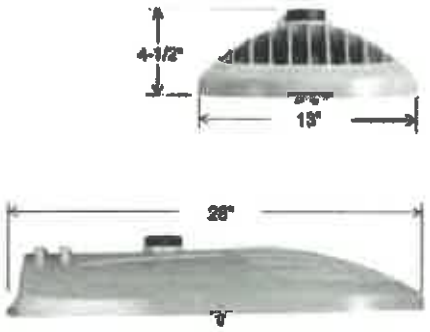

Effective Projected Area (EPA)
The EPA for the ATBM is 0.3 sq. ft.,
Approx. Wt. = 21 lbs. (9.5 kg)

STANDARDS

Color temperatures of ≤ 3000K must be specified for International Dark-Sky Association certification.

Rated for -40°C to 40°C ambient
CSA Certified to U.S. and Canadian standards
Complies with ANSI: C136.2, C136.10, C136.14, C136.31, C136.15, C136.37

Features:

OPTICAL

Same Light: Performance is comparable to 150W – 250W HPS

White Light: Correlated color temperature - 4000K, 70 CRI minimum, 3000K, 70 CRI minimum or optional 5000K, 70 CRI minimum.

IP66 rated borosilicate glass optics ensure longevity and minimize dirt depreciation. Unique IP66 rated LED light engines provide 0% uplight and restrict backlight to within sidewalk depth, providing optimal application coverage and optimal pole spacing.

Available distributions are Type II, III, IV, & V roadway distributions.

DualOptix™ visual comfort option is also available for all distributions.

ELECTRICAL

Expected Life: LED light engines are rated >100,000 hours at 25°C, L70. Electronic driver has an expected life of 100,000 hours at a 25°C ambient.

Lower Energy: Saves an expected 40-60% over comparable HID luminaires.

Robust Surge Protection: Standard surge protection is 20kV/10kA "Extreme Level" per ANSI C136.2. An optional MOV pack provides 10kV/5kA "Enhanced Level.

MECHANICAL

Includes standard AEL lineman-friendly features such as tool-less entry, 3 station terminal block and quick disconnects. Bubble level located inside the electrical compartment for easy leveling at installation.

Rugged die-cast aluminum housing and door are polyester powder-coated for durability and corrosion resistance. Rigorous five-stage pre-treating and painting process yields a finish that achieves a scribe creepage rating of 8 (per ASTM D1654) after over 5000 hours exposure to salt fog chamber (operated per ASTM B117).

Mast arm mount is adjustable for arms from 1-1/4" to 2" (1-5/8" to 2-3/8" O.D.) diameter. The 2 – bolt and optional 4 bolt clamping mechanism provide 3G vibration rating per ANSI C136.31.

The Wildlife shield is cast into the housing (not a separate piece).

CONTROLS

NEMA 3 pin photocontrol receptacle is standard, with the Acuity designed ANSI standard 7 pin receptacle optionally available.

Premium solid state locking-style photocontrol – PCSS (10 year rated life) Extreme long life solid state locking-style photocontrol – PCL1 (20 year rated life).

Extreme long life solid state locking-style photocontrol with on demand remote on/off control – PCCC (15 year rated life).

Optional onboard Adjustable Output module allows the light output and input wattage to be modified to meet site specific requirements, and also can allow a single fixture to be flexibly applied in many different applications.

ORDERING INFORMATION

Series	Performance Packages	Voltage	Optics	Mounting
ATBM Autobahn LED Roadway	**P05** 9,700 lumens **P10** 11,000 lumens **P20** 12,800 lumens **P30** 15,500 lumens **P40** 17,400 lumens **P50** 18,700 lumens **P60** 20,000 lumens **P70** 21,500 lumens	**MVOLT** Multi-volt, 120-277V **347** 347V **480** 480V	**R2** Roadway Type II **R3** Roadway Type III **R4** Roadway Type IV **R5** Roadway Type V	**(Blank)** 2 Bolt Mounting **4B** 4 Bolt Mounting

Options

Color Temperature (CCT)
- **(Blank)** 4000K CCT, 70 CRI Min.
- **3K** 3000K CCT, 70 CRI Min.
- **5K** 5000K CCT, 70 CRI Min.

Paint
- **(Blank)** Gray
- **BK** Black
- **BZ** Bronze
- **DDB** Dark Bronze
- **GI** Graphite
- **WH** White

Surge Protection
- **(Blank)** Standard 20kV/10kA SPD
- **MP** MOV Pack

Miscellaneous Options
- **HSS** House Side Shield
- **NL** NEMA Label Indicating Wattage
- **XL** Not CSA Certified – No Terminal Block Cover
- **VR**[5] Dual Optix visual comfort
- **UMR-XX** 8" Horizontal Arm for Round Pole, Painted to match Fixture
- **UMS-XX** 8" Horizontal Arm for Square Pole, Painted to match Fixture
- **UMR-GALV** 8" Horizontal Arm for Round Pole, Galvanized
- **UMS-GALV** 8" Horizontal Arm for Square Pole, Galvanized

Control Options
- **(Blank)** 3 Pin NEMA Photocontrol Receptacle
- **P7** 7 Pin Photocontrol Receptacle (dimmable driver included) [1]
- **NR** No Photocontrol Receptacle
- **AO** Field Adjustable Output [2]
- **DM** 0-10V Dimmable Driver [2]
- **PCSS** Solid-State Lighting Photocontrol [4]
- **PCLL** Solid-State Long Life Photocontrol
- **PCCC** Solid-State Long Life Photocontrol with remote control on/off [4]
- **SH** Shorting Cap

Packages
- **(Blank)** Standard Pack
- **JP** Job Pack (36/pallet)

Accessories
- **ATBMHSS** House Side Shield
- **ATBMLTS** Light Trespass Shield
- **RKATBMMVOLTSPD** ATBM Acuity SPD, MVOLT
- **RKATBMHVSPD** ATBM Acuity SPD, 347/480V
- **RKATBMMVOLTMP** ATBM MOV Pack, MVOLT
- **RKATBMHVMP** ATBM MOV Pack, 347/480V

Notes:
1. Dimmable Driver included. Not available with DM or NR.
2. Controls by others. Not available with P7 or AO.
3. Not available with DM.
4. MVOLT only.
5. VR option does not provide zero uplight performance.

© 2014-2021 Acuity Brands Lighting, Inc. All Rights Reserved. 03/10/21

Warranty Five-year limited warranty. Complete warranty terms located at: www.acuitybrands.com/support/warranty/terms-and-conditions
Actual performance may differ as a result of end-user environment and application.
Specifications subject to change without notice.

Please contact your sales representative for the latest product information.

PERFORMANCE PACKAGE

Performance Package	Distribution	Input Watts	3K (3000K CCT, 70 CRI)					4K/5K (4000K/5000K CCT, 70 CRI)					LLD @ 25°C		
			Lumens	LPW	B	U	G	Lumens	LPW	B	U	G	25k Hours	75k Hours	100k Hours
P05	R2	68	9,396	138	1	0	2	9,718	143	1	0	2	0.93	0.86	0.83
	R3		9,366	138	1	0	3	9,688	142	1	0	3			
	R4		9,030	133	1	0	3	9,340	137	1	0	3			
	R5		10,334	152	3	0	2	10,689	157	3	0	2			
P10	R2	81	10,635	131	2	0	3	11,299	139	2	0	3	0.93	0.86	0.83
	R3		10,675	132	2	0	3	11,302	140	2	0	3			
	R4		10,391	128	2	0	4	10,994	136	2	0	4			
	R5		11,504	142	3	0	2	12,086	149	3	0	2			
P20	R2	94	12,073	128	2	0	3	12,874	137	2	0	3	0.93	0.86	0.83
	R3		12,065	128	2	0	3	12,818	136	2	0	3			
	R4		11,948	127	2	0	4	12,525	133	2	0	4			
	R5		13,085	139	4	0	2	13,776	147	4	0	2			
P30	R2	118	14,637	124	2	0	3	15,514	131	2	0	3	0.93	0.86	0.83
	R3		14,631	124	2	0	3	15,452	131	2	0	3			
	R4		14,317	121	2	0	4	15,151	128	2	0	5			
	R5		15,775	134	4	0	2	16,685	141	4	0	2			
P40	R2	135	16,233	120	2	0	3	17,493	130	2	0	3	0.93	0.86	0.83
	R3		16,402	121	2	0	3	17,367	129	2	0	3			
	R4		15,911	118	2	0	5	17,008	126	2	0	5			
	R5		17,507	130	4	0	2	18,596	138	4	0	2			
P50	R2	152	17,541	115	2	0	3	18,748	123	2	0	3	0.93	0.86	0.83
	R3		17,677	116	2	0	4	18,712	123	2	0	4			
	R4		17,154	113	2	0	5	18,246	120	2	0	5			
	R5		19,008	125	4	0	2	20,088	132	4	0	2			
P60	R2	168	18,770	112	2	0	3	20,095	120	3	0	3	0.93	0.86	0.83
	R3		18,830	112	2	0	4	20,094	120	3	0	4			
	R4		18,365	109	2	0	5	19,648	117	2	0	5			
	R5		20,350	121	4	0	2	21,505	128	4	0	2			
P70	R2	190	20,190	106	3	0	3	21,585	114	3	0	3	0.93	0.86	0.83
	R3		20,142	106	3	0	4	21,504	113	3	0	4			
	R4		19,660	103	2	0	5	21,024	111	3	0	5			
	R5		21,988	116	4	0	2	23,076	121	4	0	2			

Note: Individual fixture performance may vary. Specifications subject to change without notice.

© 2014-2021 Acuity Brands Lighting, Inc. All Rights Reserved. 03/10/21

Warranty Five-year limited warranty. Complete warranty terms located at:
www.acuitybrands.com/support/warranty/terms-and-conditions
Actual performance may differ as a result of end-user environment and application.
Specifications subject to change without notice.

Please contact your sales representative for the latest product information.

PERFORMANCE PACKAGE

ATBM with DualOptix	Distribution	Input Watts	3000K					4000K/5000K					LDD @ 25°C		
			Lumens	LPW	B	U	G	Lumens	LPW	B	U	G	50k Hours	75k Hours	100k Hours
P05	R2 with VR	68	8,923	122	2	3	3	8,609	127	2	3	3	0.93	0.88	0.83
	R3 with VR		8,296	122	2	3	3	8,581	126	2	3	3			
	R4 with VR		7,998	118	2	3	4	8,273	122	2	3	4			
	R5 with VR		9,164	135	3	3	3	9,468	139	3	3	3			
P10	R2 with VR	81	9,421	116	2	3	3	10,009	124	2	3	3	0.93	0.88	0.83
	R3 with VR		9,456	117	2	3	4	10,012	124	2	3	4			
	R4 with VR		9,204	114	2	3	4	9,738	120	2	3	4			
	R5 with VR		10,191	126	3	3	3	10,706	132	3	3	3			
P20	R2 with VR	94	10,694	114	2	3	4	11,404	121	2	3	4	0.93	0.88	0.83
	R3 with VR		10,687	114	2	3	4	11,354	121	2	3	4			
	R4 with VR		10,581	113	2	3	5	11,094	118	2	3	5			
	R5 with VR		11,591	123	3	3	3	12,203	130	3	3	3			
P30	R2 with VR	118	12,988	110	2	3	4	13,742	116	2	3	4	0.93	0.88	0.83
	R3 with VR		12,980	110	2	3	4	13,687	116	2	3	5			
	R4 with VR		12,681	107	2	3	5	13,420	114	2	3	5			
	R5 with VR		13,974	118	3	3	3	14,780	125	3	3	3			
P40	R2 with VR	135	14,379	107	2	3	4	15,495	115	3	3	5	0.93	0.88	0.83
	R3 with VR		14,529	108	2	3	5	15,384	114	3	3	5			
	R4 with VR		14,093	104	2	3	5	15,066	112	3	3	5			
	R5 with VR		15,508	115	3	3	3	16,471	122	4	3	3			
P50	R2 with VR	152	15,538	102	3	3	5	16,607	109	3	3	5	0.93	0.88	0.83
	R3 with VR		15,858	103	3	3	5	16,575	109	3	3	5			
	R4 with VR		15,195	100	3	3	5	16,162	106	3	3	5			
	R5 with VR		16,837	111	4	3	3	17,794	117	4	3	4			
P60	R2 with VR	168	16,828	99	3	3	5	17,800	106	3	3	5	0.93	0.88	0.83
	R3 with VR		16,679	99	3	3	5	17,799	106	3	3	5			
	R4 with VR		16,271	97	3	3	5	17,404	104	3	3	5			
	R5 with VR		18,026	107	4	3	4	19,049	113	4	3	4			
P70	R2 with VR	190	17,884	94	3	3	5	19,102	101	3	3	5	0.93	0.88	0.83
	R3 with VR		17,842	94	3	3	5	19,048	100	3	3	5			
	R4 with VR		17,415	92	3	3	5	18,623	98	3	3	5			
	R5 with VR		19,477	103	4	3	4	20,440	108	4	3	4			

© 2014-2021 Acuity Brands Lighting, Inc. All Rights Reserved. 03/10/21

Warranty Five-year limited warranty. Complete warranty terms located at: www.acuitybrands.com/support/warranty/terms-and-conditions
Actual performance may differ as a result of end-user environment and application.
Specifications subject to change without notice.

Please contact your sales representative for the latest product information.

UMR POLE ADAPTOR

RECOMMENDED FOR USE WITH POLES OF 4" DIAMETER OR SMALLER

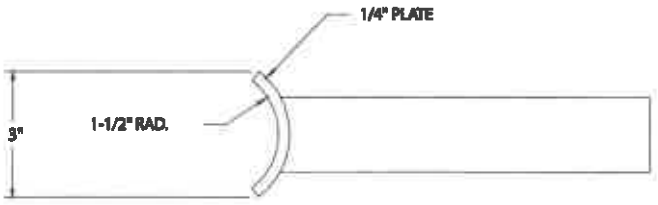

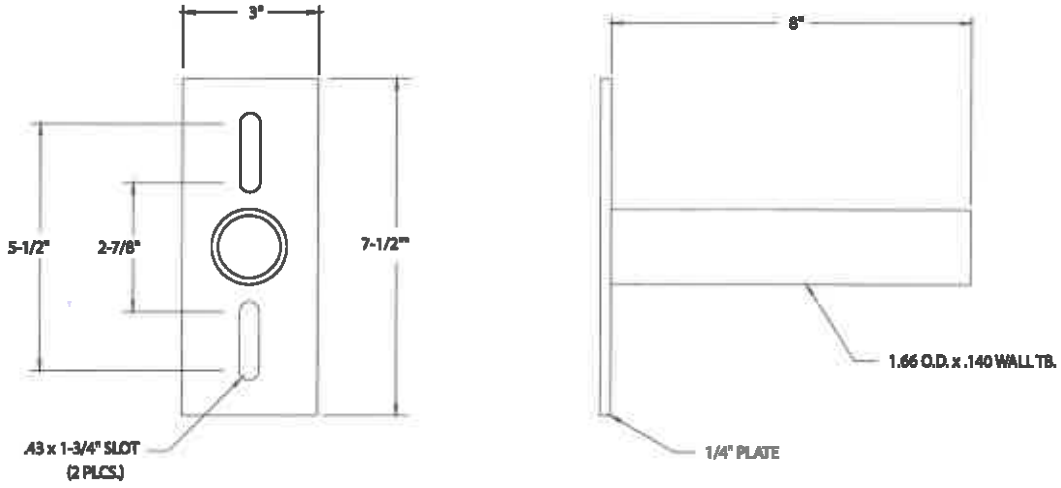

UMS POLE ADAPTOR

© 2014-2021 Acuity Brands Lighting, Inc. All Rights Reserved. 03/10/21

Warranty Five-year limited warranty. Complete warranty terms located at:
www.acuitybrands.com/support/warranty/terms-and-conditions
Actual performance may differ as a result of end-user environment and application.
Specifications subject to change without notice.

Please contact your sales representative for the latest product information.

SMART CONTROL
SPECIFICATIONS SHEETS

Ubicell Model 2.0 Smart Streetlight Controller

ubicell™

Specifications

Lamp Interface	LED, CF and HID
Lamp Power	960W@480V, 554W@277V, 480W@240V, 240W@120V
On/Off	Photocell control, software programmable
Dimming Controls	PWM, 0-10V, DALI, DALI2
Dimming Range	DIM 1 - 0-10V PWM, ability to detect stray voltage but prohibits external sensor use DIM 2 - 0-10V PWM, ability to hardwire an external sensor, but prohibits the ability to detect stray voltage DIM 3 - DALI enabled, ability to hardwire an external sensor, plus the ability to detect stray voltage
External Sensor Interface	DALI/DALI 2
Communication Module	LTE CAT-1
Location Based Services	GPS, WiFi traffic movement, Bluetooth info beacons
OTA Updates	Yes
Security	AES 128/256-bit encryption
Voltage Detection	Real-time detection of "energized" metal poles
Power Surge Protection	10KV/5KA
Power Supply	90V to 506V (50/60Hz)
Average Power Consumption	1W
IP Ratings	IP66
Impact Rating	IK07
Operating Temperature Range	-30C to +70C
Dimensions	Diameter: 82.5mm (3.25 in) Height: 98mm (3.86 in)
Weight	290 grams
Network Protocol	IPV4 and IPV6 network compliant





Utility Power Metering

Accuracy	ANSI C12.20 Class 0.5
Accuracy Verification	Infrared pulse
Line Voltage	90V to 506V (50/60Hz)
Line Voltage Accuracy	+/- 0.5%
Current Accuracy	+/- 0.5%
Power	Active/reactive/power factor
Energy Consumption	kWh
Sag & Swell Detection	Yes
On/Off Cycles	Cycle count and cycle variation (fault detection)
Running Hour	0-10 years



Programmable Parameters

- Customer device management
- Scheduling controls
- Alert thresholds
- Sunrise/sunset offsets
- Tilt detection
- Vibration detection
- Voltage detection
- Power detection
- Photocell levels
- Luminaire fault detection
- Power loss after power failure
- Network communication failure
- Wireless network configuration

Warranty

5-Year Warranty

10-Year Optional Warranty

ubicquia

POLE AND ARM
SPECIFICATIONS SHEETS

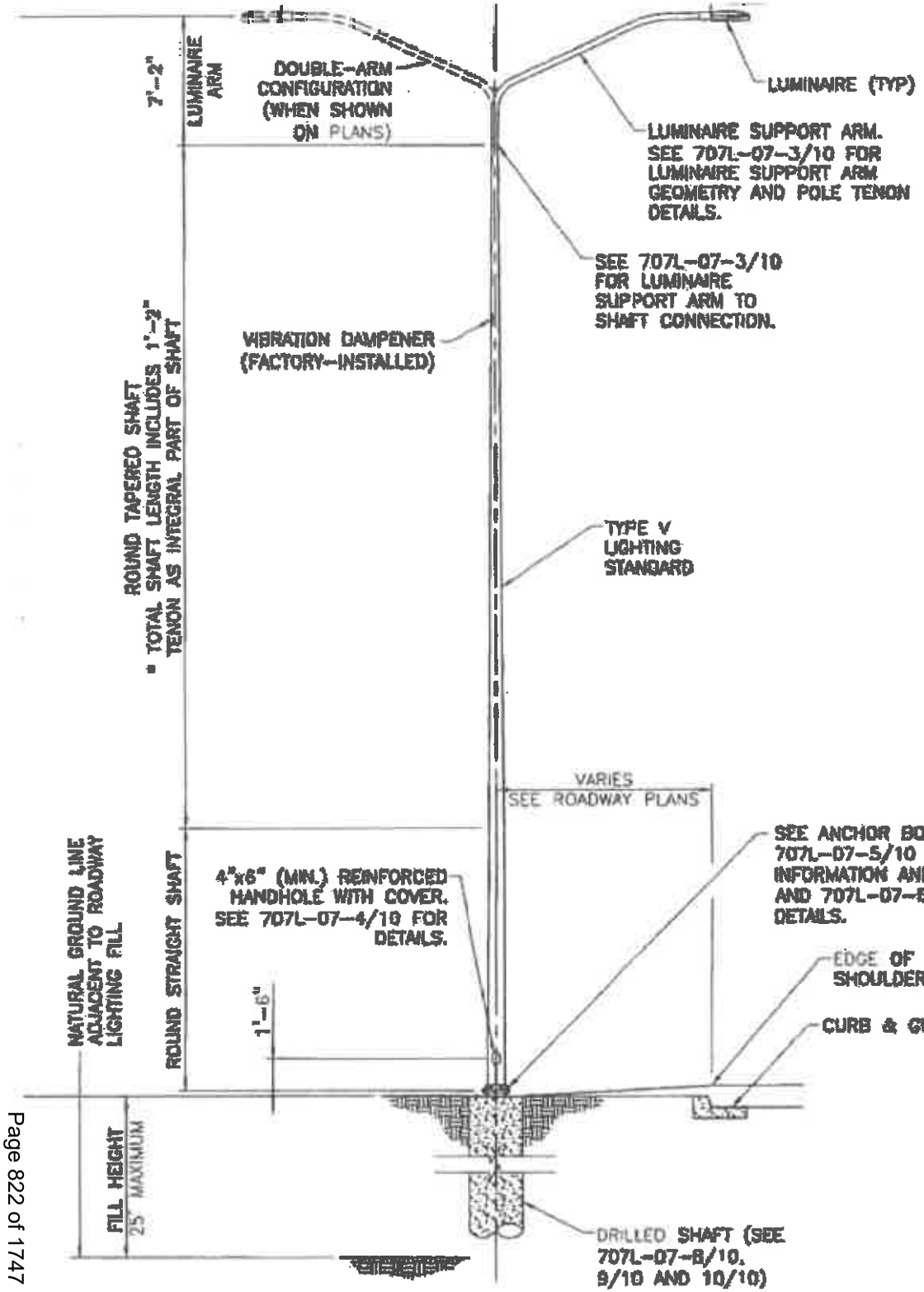

TABLE OF VARIABLE POLE DIME

MOUNTING HEIGHT	ARM CONFIGURATION	MAX TAPERED SHAFT LENGTH	TOTAL SHAFT LENGTH*	OUTSIDE DIA BOTTOM
30'-0"	SINGLE	22'-7"	24'-0"	8.00
	DOUBLE			
40'-0"	SINGLE	30'-0"	34'-0"	8.00
	DOUBLE			
50'-0"	SINGLE	39'-6"	44'-0"	10.00
	DOUBLE			

THIS STAND
PROJECTS.
DRAWINGS
DRAWINGS TH
WILL BE IDE
NOT BE PR
DESIGNER W
THE RESPON

DATE

DEPART



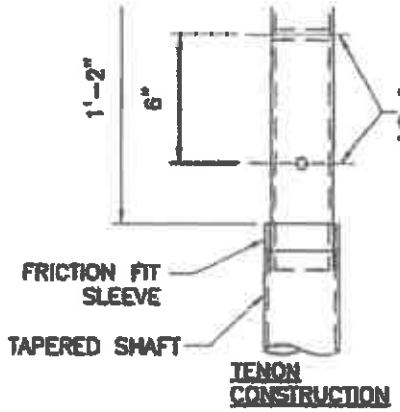

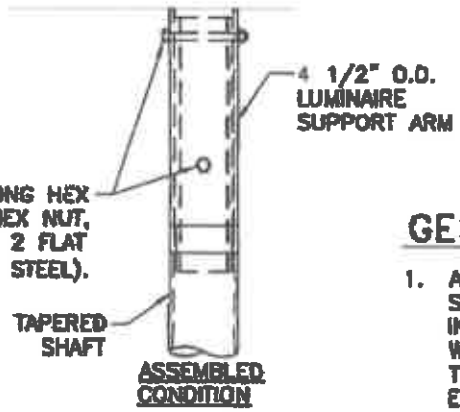

POLE TENON DETAILS
NOT TO SCALE

GENERAL

1. ARM BOTTOM SLIPFITTER CC INTERNAL AND WOULD DAMAG THE PROPER ELECTRICAL CI
2. ARM MEMBERS DIAMETER AT
3. HORIZONTAL M A SQUARE GR FABRICATOR'S
4. IF ARM CONNI DEPICTED HER SHALL ENSURI THE STRENGTI MEMBER. DIM CONNECTIONS WITH THE DIM

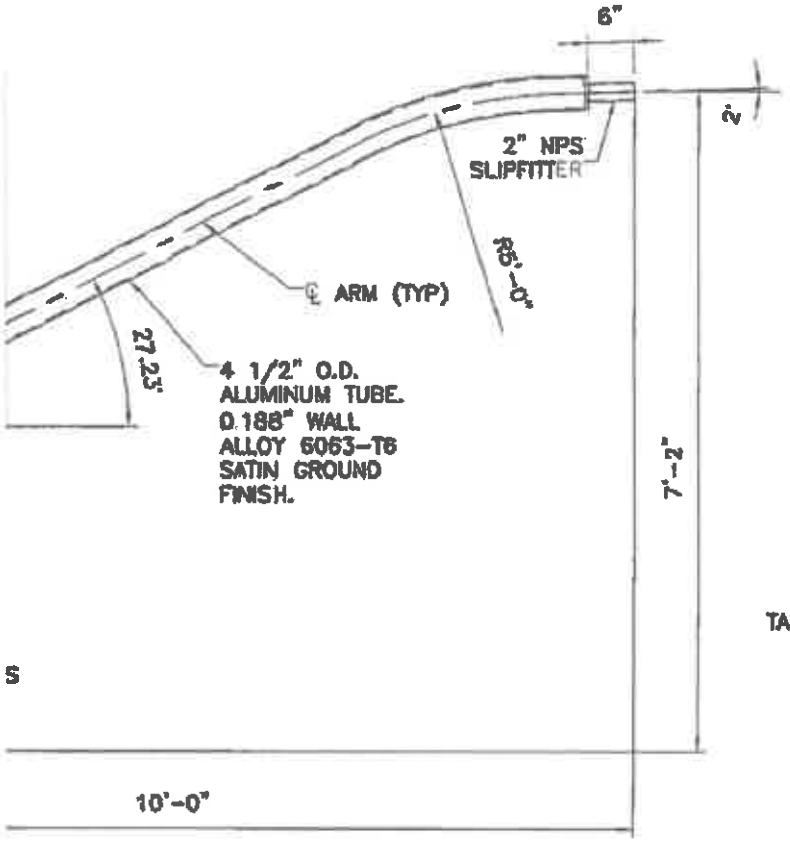

E SUPPORT ARM GEOMETRY
NOT TO SCALE

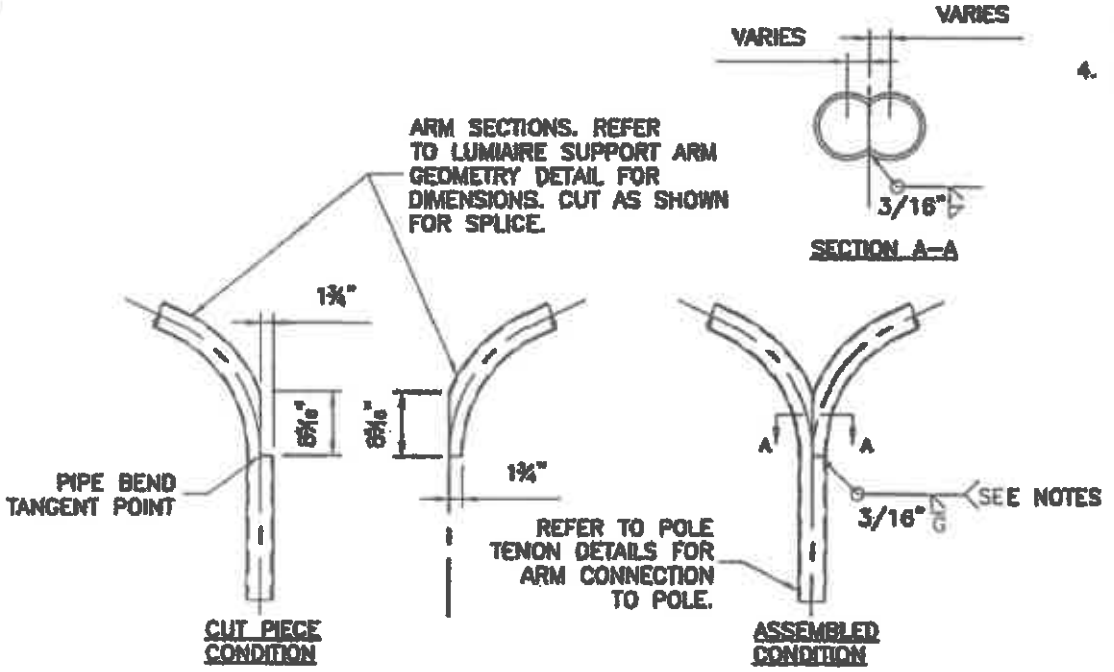

DOUBLE ARM SPLICE DETAILS
NOT TO SCALE

THIS STAND
PROJECTS.
DRAWINGS
DRAWINGS TH
WILL BE IDE
NOT BE PR
DESIGNER IN
THE RESPON

DATE

DEPAR

JOHN MIGLIACCIO NEW JERSEY 19258 03/19/18

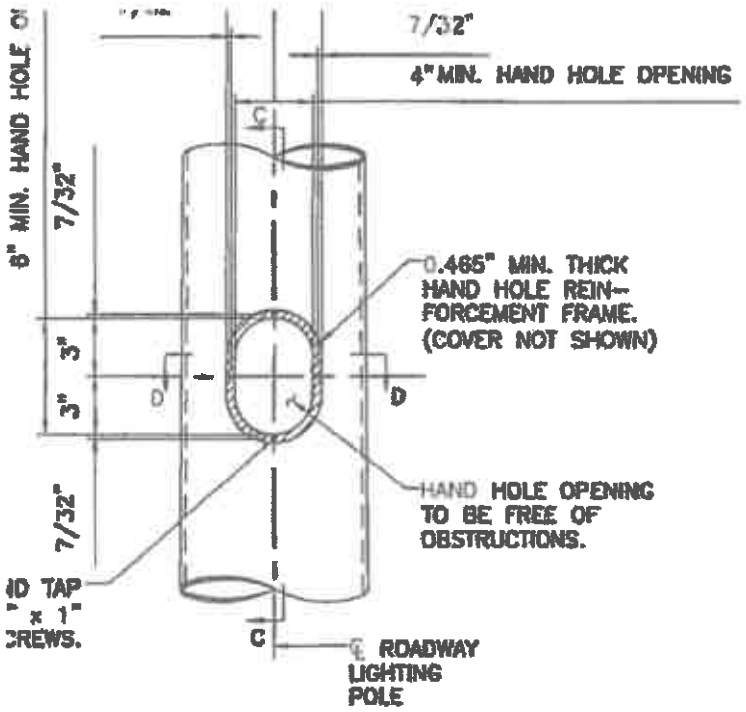

HAND HOLE DETAIL
NOT TO SCALE

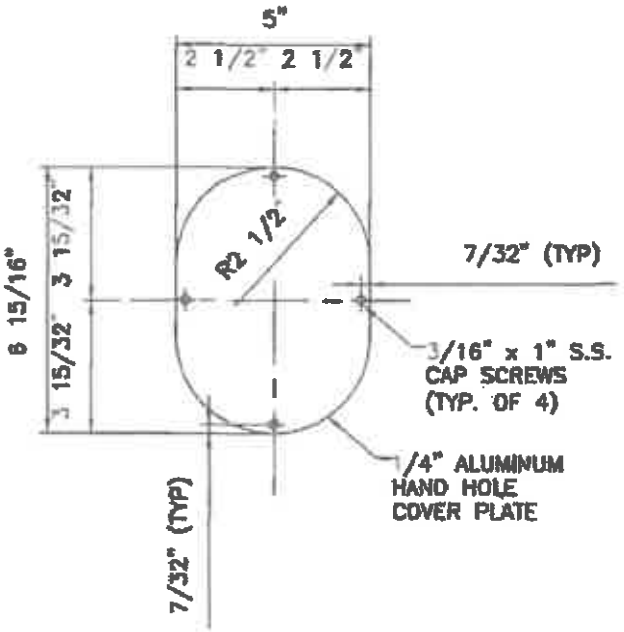

HAND HOLE COVER
NOT TO SCALE

1. HANDHOLES SHALL BE FREE OF OBSTRUCTIONS WHICH WOULD D OR THE PROPER OPERATION OF COMPONENT.
2. HAND HOLE COVER SHALL BE F 6063-T6 PLATE OR MAY BE HIN OF CLOSURE AS APPROVED BY
3. HAND HOLE REINFORCEMENT FRA 15/32" (MIN) WALL TUBING, CAS
4. COORDINATE LOCATIONS OF HOLI HOLE COVER PLATES WITH CONS REINFORCING FRAME. TAPPED H REINFORCING FRAME RING.
5. HAND HOLES SHALL BE ORIENTE TRAFFIC.
6. IF HAND HOLE FABRICATION DET HEREIN ARE PROPOSED, THE DE HAND HOLE REINFORCEMENT SHA SECTION TO THAT OF A SHAFT F DIMENSIONS OF ALTERNATE HAND GENERALLY CONSISTENT WITH TH

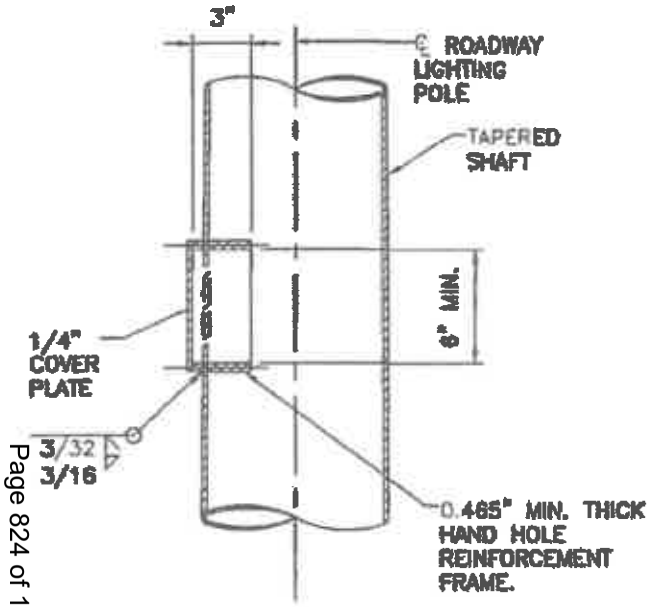

SECTION C–C

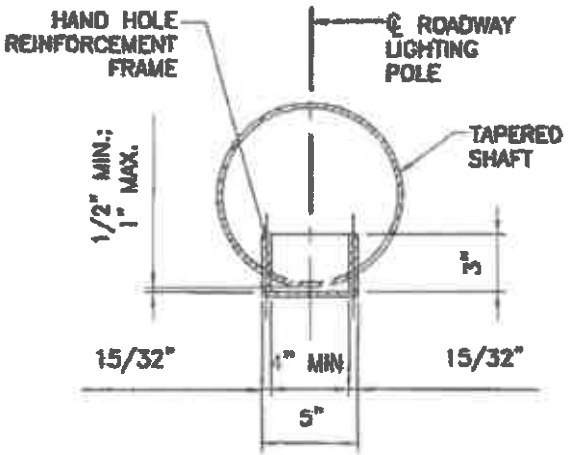

SECTION D–D

THIS STAN PROJECTS. DRAWINGS DRAWINGS T WILL BE ID NOT BE PI DESIGNER W THE RESPO

DATE

DEPAR

NUMBER OF BOLTS	SLOTTED HOLE SIZE	BOLT CIRCLE DIAMETER	BOLT TEMPLATE		BASE PLATE OPENING	BASE PLATE WIDTH	BASE PLATE THICKNESS
		"B"	O.D.	I.D.	"A"	"C"	"D"
	(IN x IN)	(IN)	(IN)	(IN)	(IN)	(IN)	(IN)
4	1.25 x 2.25	15.0	18.0	12.0	7.0	16.0	1.0
4	1.25 x 2.25	11.5	14.5	8.5	6.0	14.0	1.0
4	1.25 x 2.25	11.5	14.5	8.5	5.0	14.0	1.0

MOUNTING HEIGHT	WELD SIZE (SINGLE ARM)	WELD SIZE (DOUBLE ARM)
(FT)	(IN)	(IN)
50	5/16	3/8
40	5/16	3/8
30	1/4	1/4

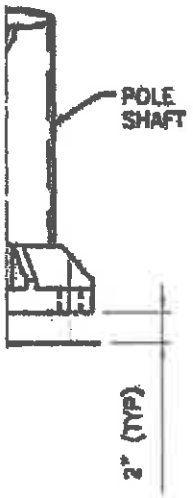

EVATION
ALE

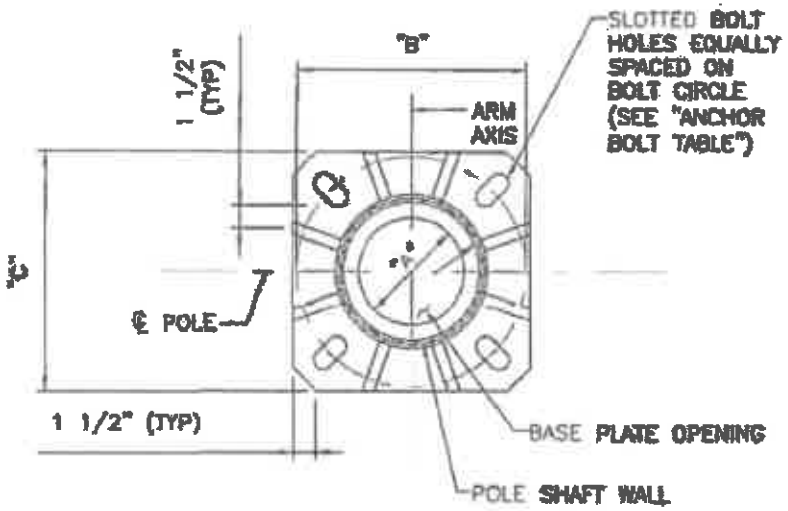

POLE BASE PLAN
NOT TO SCALE

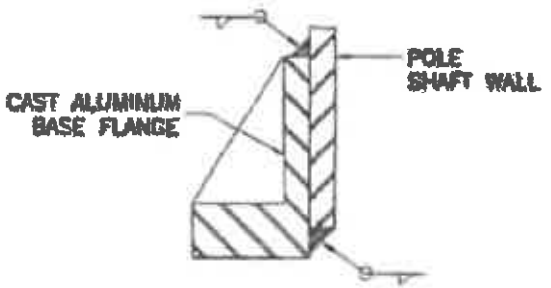

BASE WELD DETAIL
NOT TO SCALE

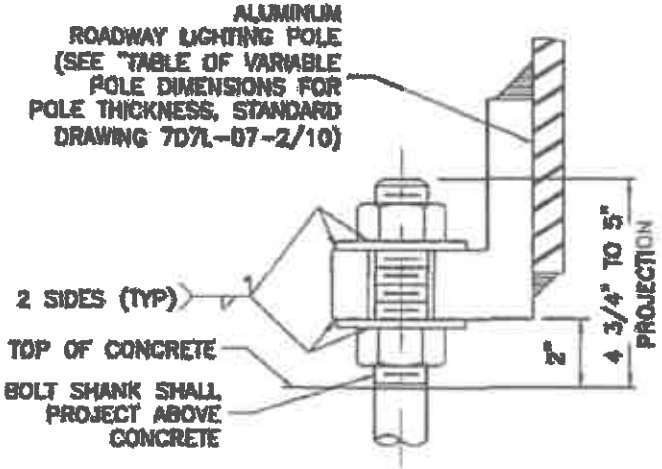

ANCHOR BOLT DETAIL
NOT TO SCALE

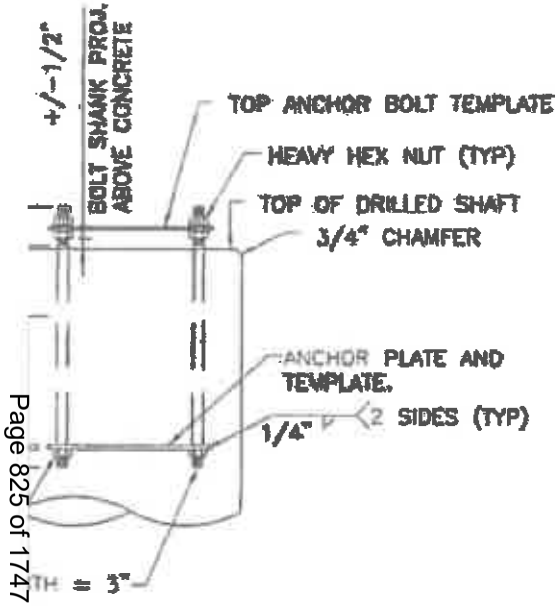

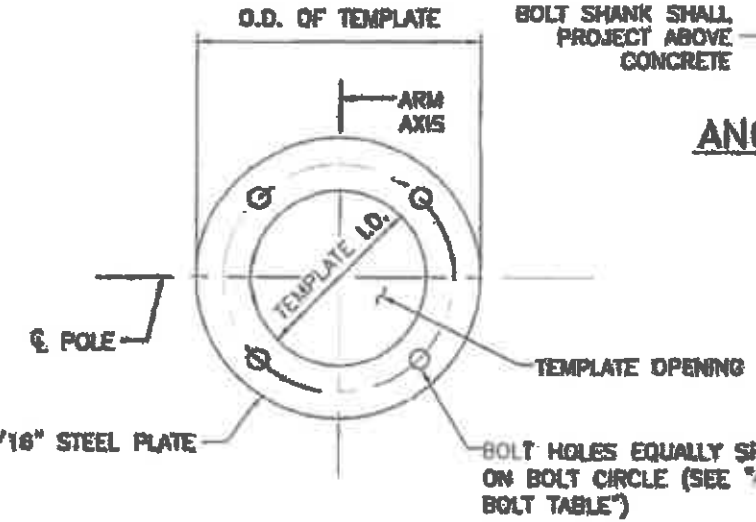

FOR BREAKA
AND REQUIR

2. INSTALL DIRI
SPECIFIED.
DIRECT-MOU
REQUIREMEN

3. ALUMINUM E
ALUMINUM A
ASTM B 10
ACCOMMODA
AND SHALL
FULL MOME
STRENGTHS
BASE FLANG
OUTSIDE DIA
MAY BE INCI
BASE FLANG

4. ANCHOR BOI
FOR THE AL
THE PROVIDI
BOLT SIZES
MINIMUM.

5. ANCHOR BOI
LENGTHS SH
7071-07-9,
DIRECT-MOU
ACCORDINGL

6. WHEN BREA
THREAD UNC
THAT OF THI

THIS STANDA
PROJECTS. C
DRAWINGS O
DRAWINGS TH
WILL BE FOR
NOT BE FIN
DESIGNER IN
THE RESPONS

DATE

DEPART

JOHN MIGLIACCIO
NEW MEXICO
19258
PROFESSIONAL ENGINEER

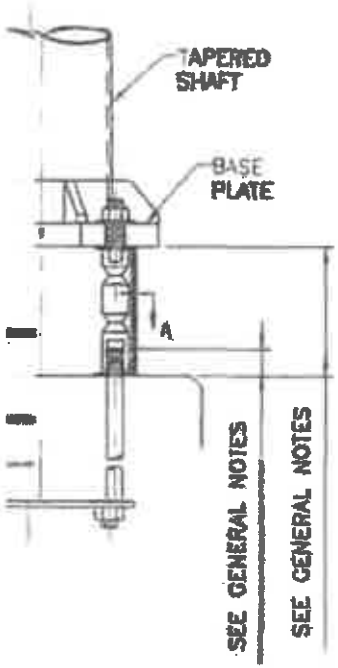

WAY POLE
ELEVATION
O SCALE

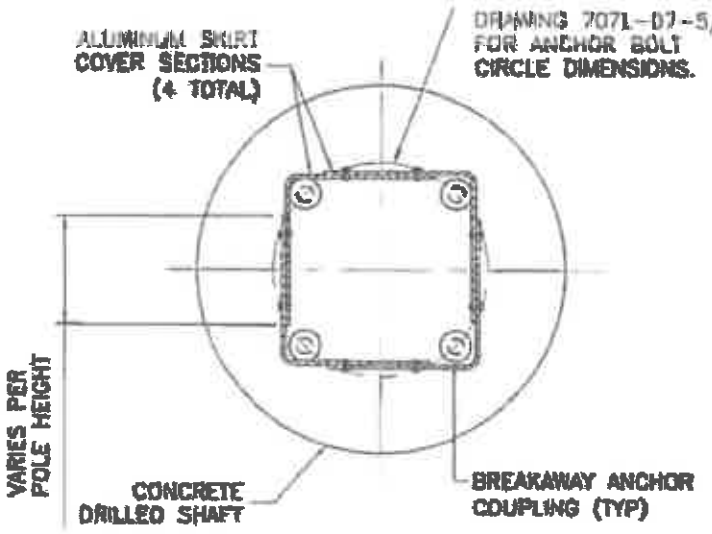

SECTION A–A: BREAKAWAY BASE SECTION

NOT TO SCALE

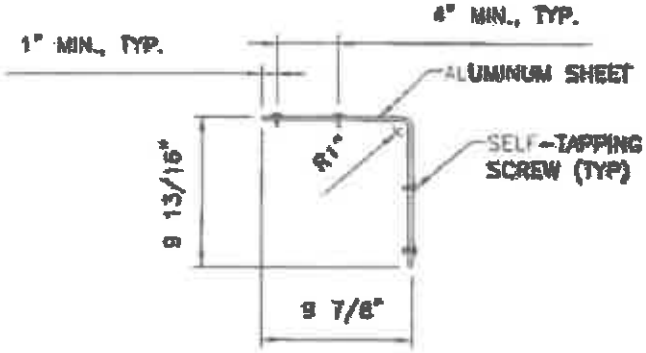

PLAN

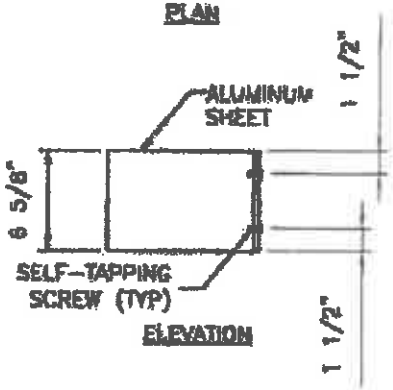

ELEVATION

ANCHOR BOLT DETAILS AND REQUIREMENTS.

2. SKIRT COVER SHALL BE FABRICATED FROM 1/16" SHEET ALUMIN
3. WHEN BREAKAWAY BASES ARE SPECIFIED, EACH LIGHT POLE SHA FOUR (4) SKIRT COVER SECTIONS AND SIXTEEN (16) SCREWS.
4. THE INTENDED USE OF THE SKIRT COVER IS TO ENCLOSE THE V BREAKAWAY SUPPORT COUPLINGS.
5. SCREWS SHALL BE SELF-TAPPING #10 x 5/8" STAINLESS STEEL.
6. BREAKAWAY SUPPORT COUPLINGS SHALL MEET THE REQUIREMENT 350, AND THE REQUIREMENTS IN 2015 (1st EDITION) AASHTO LR STRUCTURAL SUPPORTS FOR HIGHWAY SIGNS, LUMINAIRES AND TI SECTION 12.
7. WHEN BREAKAWAY BASES ARE SPECIFIED, EACH LIGHT POLE SHA FOUR (4) COUPLING SYSTEMS, COMPLETE WITH COUPLINGS, THRE NUTS, AND SHIMS.
8. BREAKAWAY ASSEMBLY DIMENSIONS VARY PER MANUFACTURER. I PROJECTIONS AND BASE PLATE OFFSETS IN ACCORDANCE WITH S ASSEMBLY MANUFACTURER'S SPECIFICATIONS.
9. ALTERNATE DESIGNS OF BREAKAWAY ASSEMBLIES MAY BE APPRO MANAGER, PROVIDED THEY MEET THE REQUIREMENTS HEREIN. WHI BREAKAWAY SYSTEMS ARE UTILIZED, IT SHALL BE THE THE CONTR RESPONSIBILITY TO PROVIDE COMPATIBLE SKIRT COVERS, AND MA ADJUSTMENTS TO ANCHOR BOLT PROJECTIONS.
10. CERTIFICATION OF BOTH BREAKAWAY AND STRUCTURAL ADEQUACY, AND/OR TEST DATA OF PRODUCTION SAMPLES TO SUPPORT CERT PROVIDED FOR BREAKAWAY SYSTEMS.

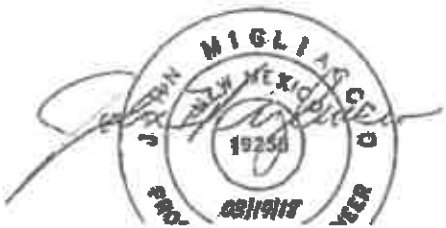

THIS STAND
PROJECTS.
DRAWINGS
DRAWINGS TH
WILL BE RE
NOT BE PR
DESIGNER W
THE RESPON

	DATE

DEPART

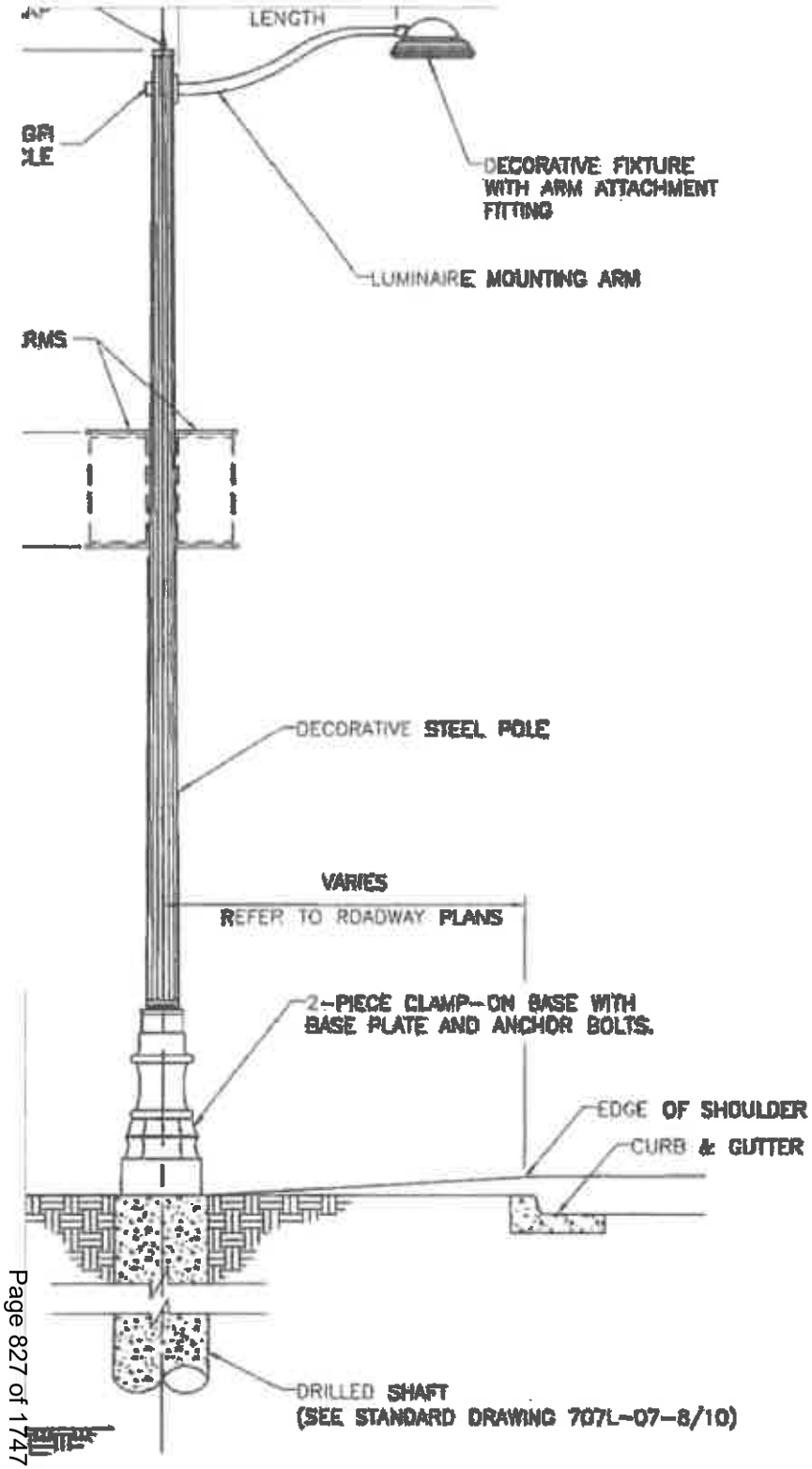

2. SHOP DRAWINGS FOR ORNAMENTAL LIGHT ASSEMBLIES SHALL BE PROVIDED TO THE NMDOT PROJECT MANAGER FOR APPROVAL, PRIOR TO FABRICATION AND CONSTRUCTION. SHOP DRAWINGS SHALL DEPICT ALL FEATURES AND OPTIONS CALLED FOR IN THE CONTRACT DOCUMENTS INCLUDING, BUT NOT LIMITED TO:

   A. POLE MODEL
   B. POLE HEIGHT
   C. POLE SHAFT MATERIAL
   D. POLE SHAFT STYLE
   E. POST CAP STYLE
   F. ARM MODEL
   G. ARM LENGTH
   H. ARM MATERIAL
   I. ARM STYLE
   J. LUMINAIRE FIXTURE MODEL
   K. LUMINAIRE FITTING MOUNT METHOD
   L. WATTAGE
   M. LIGHT SOURCE TYPE
   N. VOLTAGE
   O. LUMINAIRE LENS TYPE
   P. OPTICS TYPE
   Q. DECORATIVE BASE STYLE
   R. ACCESS DOOR LOCATION AND SIZE
   S. BASE PLATE
   T. ANCHOR BOLTS
   U. FOUNDATION LOADINGS
   V. GROUND FAULT INTERRUPTER LOCATION
   W. BANNER ARM LOCATIONS
   X. FINISHES

3. FOR ALL STRUCTURAL COMPONENTS PROVIDED BY THE ORNAMENTAL LIGHTING MANUFACTURER, CERTIFICATION OF STRUCTURAL ADEQUACY AND DESIGN CALCULATIONS TO SUPPORT CERTIFICATION SHALL BE PROVIDED.

4. THE POLE AND BASE ASSEMBLY SHALL BE PROVIDED WITH ONE ACCESS DOOR FOR WIRING AND MECHANICALLY SECURED WITH TWO, TAMPER-PROOF STAINLESS STEEL SCREWS OR OTHER APPROVED METHOD. ACCESS DOOR SHALL BE LOCATED OPPOSITE FROM THE STREET-FACING SIDE OF THE POLE.

5. THE 30' DECORATIVE ROADWAY LIGHTING OPTION ELEVATION SHOWN ON THIS STANDARD DRAWING IS A SCHEMATIC REPRESENTATION OF POSSIBLE FEATURES IN THE ASSEMBLY. ACTUAL OPTIONS, FEATURES, AND COMPONENTS SHALL BE SELECTED BY NMDOT ON A PROJECT BASIS AND WILL BE SPECIFIED IN THE ROADWAY PLANS.

THIS STAND
PROJECTS. D
DRAWINGS. D
DRAWINGS TH
WILL BE IDE
NOT BE PRI
DESIGNER WH
THE RESPONS

	DATE

DEPART

JOSEPH MIGLIACCIO
NEW MEXICO
19250
PROFESSIONAL ENGINEER
05/19/18

ION 511 OF THE LATEST EDITION OF THE NEW MEXICO STANDARD SPECIFICATIONS FOR HIGHWAY AND BRIDGE STRUCTION. FOUNDATIONS SHALL BE COMPLETED AT LEAST 7 DAYS BEFORE ERECTING LIGHTING STRUCTURES ON THE IDATIONS.

INUM ROADWAY LIGHTING SUPPORT STRUCTURES TYPE V FOR THE 30 FT, 40 FT, AND 50 FT CASES, AND ASSOCIATED IDATIONS, ARE DESIGNED TO CONFORM TO 2015 (1ST EDITION) AASHTO STANDARD SPECIFICATIONS FOR STRUCTURAL ORTS FOR HIGHWAY SIGNS, LUMINAIRES AND TRAFFIC SIGNALS. STEEL DECORATIVE (ORNAMENTAL) LIGHTING, AND CIATED FOUNDATIONS, IS DESIGNED TO CONFORM TO 2009 (5TH EDITION) AASHTO STANDARD SPECIFICATIONS FOR CTURAL SUPPORTS FOR HIGHWAY SIGNS, LUMINAIRES AND TRAFFIC SIGNALS.

CONCRETE FOR DRILLED SHAFT FOUNDATIONS SHALL BE CLASS G, f'c = 3000 PSI. ALL CONCRETE FOR SPREAD ING FOUNDATIONS SHALL BE CLASS A, f'c = 3000 PSI. CONCRETE SHALL CONFORM TO SECTION 510 – PORTLAND NT CONCRETE. ALL EXPOSED EDGES OF CONCRETE SHALL BE CHAMFERED ¾" UNLESS OTHERWISE NOTED.

ORCING STEEL (REBAR) SHALL CONFORM TO SECTION 540 – STEEL REINFORCEMENT AASHTO M 31 (ASTM A615), E 60. DIMENSIONS REFER TO THE CENTERLINE OF THE BAR. ALL REINFORCING STEEL SHALL BE NON–EPOXY SS OTHERWISE NOTED.

OR BOLTS SHALL CONFORM TO AASHTO M 314 (ASTM F1554 GRADE 55). PROVIDE A HEX NUT, LEVELING NUT AND SHERS TOP AND BOTTOM OF EACH BOLT. ANCHOR BOLTS SHALL BE CONSIDERED INCIDENTAL TO THE FOUNDATIONS.

IDE BOLT TEMPLATE FOR CAST–IN–PLACE INSTALLATION OF ANCHOR BOLTS. COORDINATE TEMPLATE REQUIREMENTS BOLT CIRCLE DIAMETER, BOLT DIAMETER, AND DRILLED SHAFT DIAMETER FOR PLACEMENT AND FIT. TAKE PROPER TO ALIGN FOUNDATION BOLT PATTERN WITH THE BASE PLATE PATTERN THAT RESULTS IN CORRECT CENTERLINE MENT OF SUPPORT STRUCTURE WITH BOLT PATTERN.

TO ERECTION OF POSTS, EXCAVATION CREATED FOR FOUNDATION CONSTRUCTION SHALL BE BACKFILLED IN RDANCE WITH SECTION 210 OF THE LATEST EDITION OF THE NEW MEXICO STANDARD SPECIFICATIONS FOR HIGHWAY BRIDGE CONSTRUCTION WITH MATERIAL EQUIVALENT TO THE SURROUNDING SOIL. FOUNDATION CONCRETE SHALL HAVE HED A MINIMUM STRENGTH OF 2200 PSI PRIOR TO BACKFILLING. BACKFILL SHALL BE CONSIDERED INCIDENTAL TO TRUCTION.

IDATION DESIGN IS FOR THE ROADWAY LIGHTING SUPPORT STRUCTURES STANDARD DIAMETERS. IF A LARGER DIAMETER RNISHED, THE CONTRACTOR SHALL BUILD A LARGER FOUNDATION AS DETERMINED NECESSARY BY THE PROJECT GER AND NO ADDITIONAL PAYMENT OR COMPENSATION SHALL BE MADE.

ED SHAFT DESIGN CONSIDERED PARAMETERS FOR COHESIVE AND NON–COHESIVE SOILS AS WELL AS ROCK. SHOULD OR SOIL CONDITIONS POSE UNIQUE CHALLENGES, CONSULT WITH THE STATE GEOTECHNICAL ENGINEER FOR ANY DIAL MEASURES BEFORE PLACEMENT OF THE FOUNDATION.

ED SHAFT FOUNDATION DEPTH MUST BE INCREASED IF INSTALLED ON OR NEAR (WITHIN A SHAFT DIAMETER OF) A ND SLOPE. IF GROUND SLOPES MINIMALLY DOWN NO MORE THAN 2 FEET AND THEN BACK UP WITHIN ½ IDATION DEPTH, AS IN A DRAINAGE DITCH, TREAT AS IF LEVEL. SEE FOUNDATION DETAIL FOR SLOPING GROUND, THIS T.

HED GRADE FOR ALL FOUNDATIONS SHALL BE PER THE CONTRACT DOCUMENTS. THE TOP OF STANDARD FOUNDATIONS BE FLUSH WITH ADJACENT SIDEWALK OR PAVED AREAS WHEN PRESENT AND SHALL CONFORM TO THE AMERICANS DISABILITIES ACT.

BASE PLATE AND ANCHOR BOLT DETAILS, SEE 707L–07–5/10.

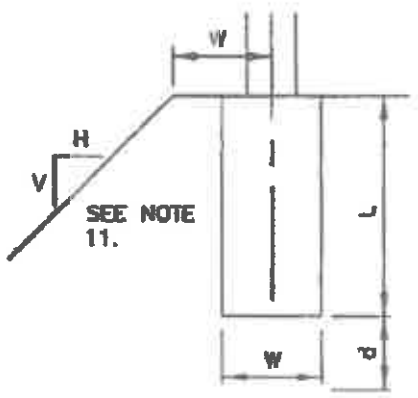

FOUNDATION DETAIL FOR SLOPING GROUND

THIS STA
PROJECTS.
DRAWINGS
DRAWINGS
WILL BE
NOT BE
DESIGNER
THE RESP

NO.	DAT

DEPAI



IDWAY LIGHTING
T STRUCTURE
STANDARD DRAWINGS
7-1/10
4
7-7/10

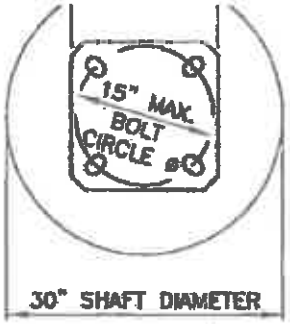

SECTION A-A
NOT TO SCALE

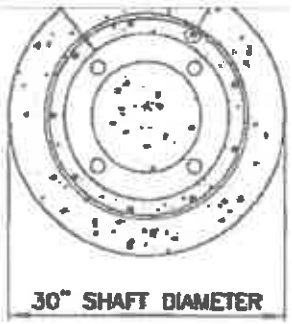

SECTION B-B
NOT TO SCALE

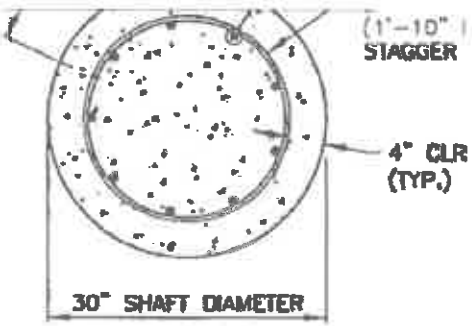

SECTION C-C
NOT TO SCALE

DRILLED SHAFT LENGTHS

SEE NOTE 9 FOUNDATION NOTES 707-07-8/10

POLE HEIGHT (ft)	DRILLED SHAFT LENGTH (ft)
50	8.5
30 ORNAMENTAL	7.0
40	7.5
30	6.0

ANCHOR BOLTS

POLE HEIGHT (ft)	POLE DIAMETER O.D. (in)	BOLT DIAMETER (in)	BOLT LENGTH (in)	NUMBER OF BOLTS	BOLT CIRCLE DIAMETER (in)
50	10	1.000	52	4	15
40	9	1.000	52	4	11.5
30	8	1.000	52	4	11.5

REINFORCI

#8V1	DRILLED SHAFT LI



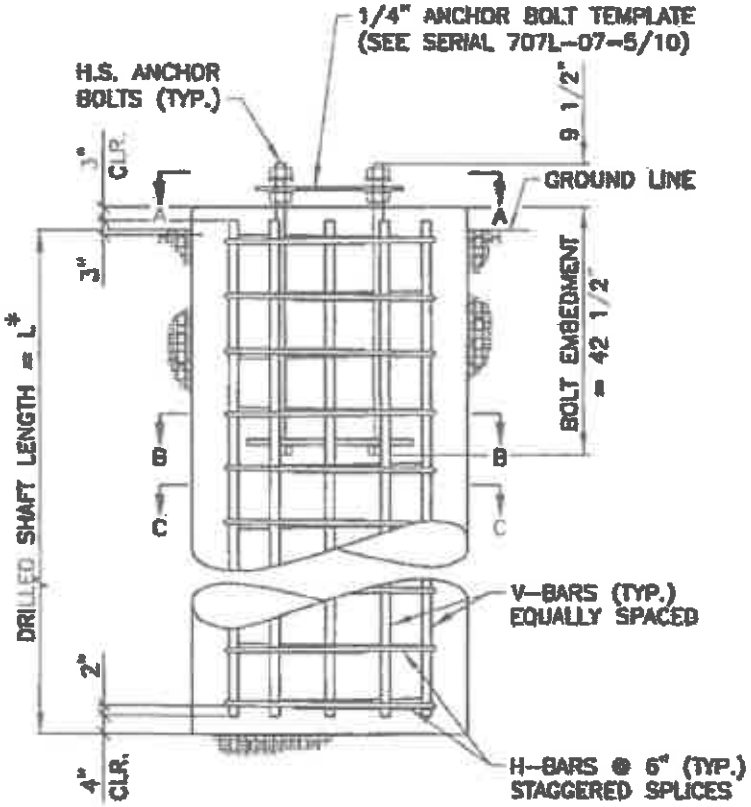

FOUNDATION ELEVATION

NOT TO SCALE

* DRILLED SHAFT LENGTH IS MEASURED AS LENGTH OF SHAFT IN SOIL OR ROCK AS APPLICABLE. SEE DRILLED SHAFT LENGTHS TABLE FOR LENGTH.

ADE
11
IN NOTES
8/10

THIS STAN
PROJECTS.
DRAWINGS
DRAWINGS
WILL BE
NOT BE
DESIGNER
THE RESPO

NO.	DAT

DEPAR



DWAY LIGHTING
STRUCTURE
STANDARD DRAWINGS
-1/10
-
-7/10

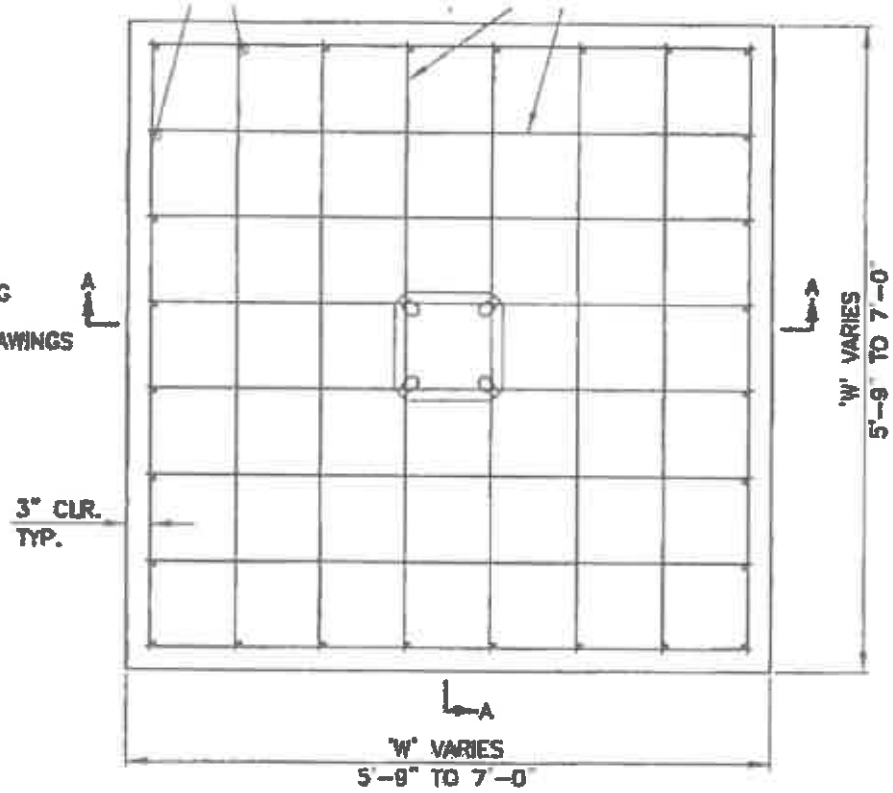

PLAN VIEW OF SPREAD FOOTING
NOT TO SCALE

DESIGN DATA:

DESIGN STRENGTH:

CONCRETE: fc' = 3000 PSI @ 28 DAYS = NMDOT CLA
REINFORCING STEEL: fy = 60 KSI
ALLOWABLE SOIL BEARING PRESSURE: 1.0 T/SQ. FT.

ROADWAY LIGHTING MOUNTING HEIGHT (ft)	SQUARE FOOTING WIDTH 'W' (ft)	SQUARE FOOTING DEPTH 'D' (ft)	REINFORCING SCHEDU		
			MARK	SIZE	LENGTH
50	7.00	3.50	#4V	#4	3'-0"
			#4H	#4	6'-6"
40	6.50	3.50	#4V	#4	3'-0"
			#4H	#4	6'-0"
30	5.75	3.50	#4V	#4	3'-0"
			#4H	#4	5'-3"
30 ORNAMENTAL	6.75	3.50	#4V	#4	3'-0"
			#4H	#4	6'-3"

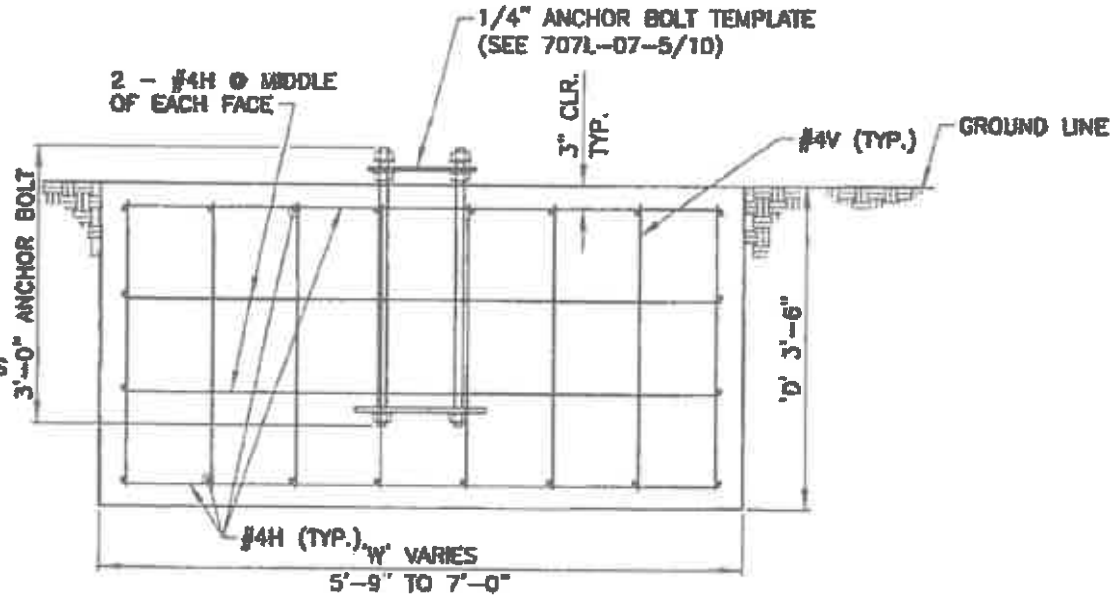

ISH GRADE
E NOTE 11
UNDATION NOTES
PL-07-8/10

THIS STA
PROJECTS.
DRAWINGS
DRAWINGS
WILL BE
NOT BE
DESIGNER
THE RESP

NO.	DA

DEPAI



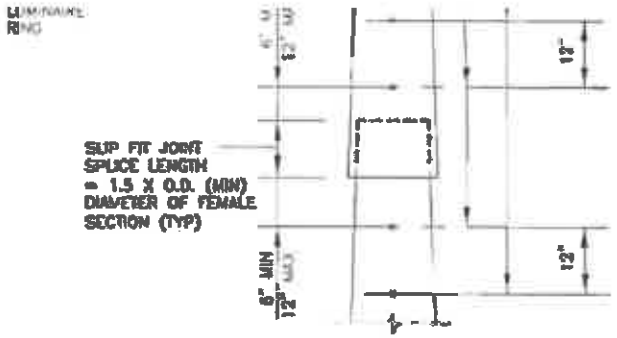

SLIP JOINT DETAIL
NOT TO SCALE

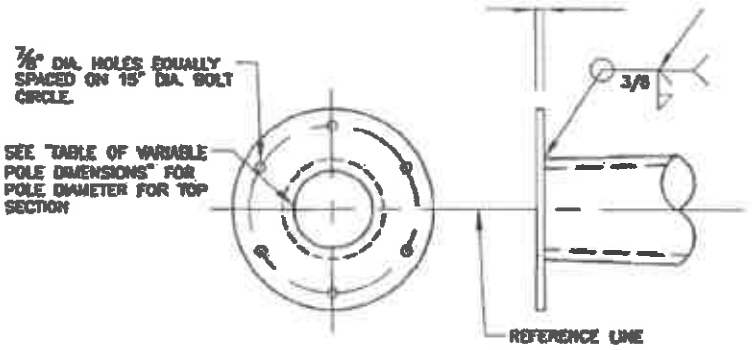

TOP CONNECTION DETAIL
NOT TO SCALE

HEIGHT "H"	SECTION	SECTION LENGTH	SPL LEN
(FT)		(FT)	(I
150	1	40.00	53
	2	39.50	26.
	3	39.42	18
	4	37.50	0.0
120	1	42.00	26
	2	41.33	18
	3	40.33	0.0
100	1	32.00	25
	2	31.67	19
	3	40.00	0.0
75	1	38.92	20
	2	37.75	0.0

TYPE VI LIGHTING STANDARD

SLIP FIT JOINT SPLICE LENGTH = 1.5 X O.D. (MIN) DIAMETER OF FEMALE SECTION (TYP) (SEE "SLIP JOINT DETAIL" THIS SHEET).

NOTE 7, TYP

11" X 30" REINFORCED HAND HOLE

SEE ANCHOR BOLT TABLE 707L-08-3/7 FOR ANCHOR BOLT INFORMATION.

GENERAL NOTES:

1. DESIGN CONFORMS TO 2001 AASHTO STANDARD SPECIFICATIONS FOR STRUCTURAL SUPPORTS FOR HIGHWAY SIGNS, LUMINAIRES AND TRAFFIC SIGNALS, WITH REVISIONS UP TO AND INCLUDING 2006 INTERIMS.

2. DESIGN CRITERIA:

   RECURRENCE INTERVAL = 50 YRS
   SERVICE LIFE = 50 YRS
   DESIGN WIND SPEED = 90 MPH
   GUST EFFECT FACTOR = 1.14
   FATIGUE CATEGORY I
   MATERIALS (POLES AND HAND HOLES): 55,000 PSI MINIMUM YIELD

   MAXIMUM NUMBER OF LUMINAIRES IS EIGHT (8). MAXIMUM WEIGHT OF EACH LUMINAIRE IS 85 LBS. WITH A PROJECTED AREA OF 3.4 FT².

   MAXIMUM ALLOWABLE DEFLECTION = 9% OF POLE HEIGHT.

3. WORKMANSHIP AND MATERIALS SHALL CONFORM TO NEW MEXICO DEPARTMENT OF TRANSPORTATION (NMDOT) STANDARD SPECIFICATIONS FOR HIGHWAY AND BRIDGE CONSTRUCTION CURRENT EDITION. CONTRACTOR SHALL CONTACT NMDOT FOR APPROVED PRODUCTS LISTING.

4. POLES SHALL CONSIST OF ROUND TELESCOPING SECTIONS, TAPERED AT A RATE OF 0.14"/FOOT. MULTI-SIDED SECTIONS WILL BE PERMITTED AS AN ALTERNATE DESIGN. SEE NOTE 9 FOR REQUIREMENTS.

5. MATERIALS:

   A. POLES SHALL BE STEEL OF 50 KSI MINIMUM YIELD STRENGTH AFTER FABRICATION.

   B. BASE PLATES AND ANCHOR BOLT TEMPLATES SHALL BE PER AASHTO M-183 (ASTM A-36).

   C. HARDWARE AND ANCHOR BOLTS SHALL BE PER AASHTO M-314 (ASTM F-1554), GR. 55. EACH BOLT SHALL BE SUPPLIED WITH A MINIMUM OF THREE HEAVY HEX NUTS AND TWO FLAT WASHERS. STEEL BOLT TEMPLATES SHALL BE SUPPLIED WITH ANCHOR BOLTS. NUTS SHALL BE ASTM A-563. WASHERS SHALL BE ASTM A-436.

   D. PRELOAD BOLTS BASED ON BOLT TYPE AND DIAMETER. PROVIDE LOCKING ADHESIVE (NO INDUSTRIES, NYLOCK, LOCKTITE, OR APPROVED EQUAL).

6. GALVANIZING:

   A. POLES AND PLATES SHALL BE GALVANIZED PER AASHTO M-111-84 (ASTM A-123).

   B. HARDWARE AND ANCHOR BOLTS SHALL BE HOT-DIPPED GALVANIZED PER AASHTO M-232 M (ASTM A-153).

7. WELDS:

   ALL FABRICATORS SHALL BE CERTIFIED UNDER NMDOT SPECIFICATION SECTION 541.3 "CERTIFICATION OF STEEL FABRICATORS", AND SHALL CONFORM TO THE LATEST EDITION OF THE STRUCTURAL WELDING CODE (ANSI/AWS D1.1) AND SHALL

8. THE CONTRACTOR/FABRICATOR SHALL FURNISH EIGHT SETS OF SHOP DRAWINGS OF ALL HIGH MAST LUMINAIRE SUPPORT STRUCTURE COMPONENTS FOR THE TYPE VI LIGHTING STANDARD TO THE STATE BRIDGE ENGINEER FOR APPROVAL. SHOP DRAWINGS SHALL COVER ALL MECHANISMS/PARTS REQUIRED FOR THE INSTALLATION. THE CONTRACTOR SHALL FURNISH AN APPROPRIATE CERTIFICATION OF COMPLIANCE WITH ALL DESIGN REQUIREMENTS. THE CONTRACTOR'S CERTIFICATION SHALL APPEAR ON THE DRAWINGS. THE CONTRACTOR MUST RECEIVE WRITTEN APPROVAL OF THE SHOP DRAWINGS FROM THE ENGINEER PRIOR TO BEGINNING FABRICATION OR ASSEMBLY OF PARTS.

9. THE INFORMATION AND DETAILS PROVIDED FOR POLES, ANCHOR BOLTS, HAND HOLE, AND FOUNDATIONS IN THESE STANDARDS ARE MINIMUM REQUIREMENTS. DESIGN AND DETAILS FOR ALTERNATE DESIGNS AND ALL OTHER LUMINAIRE SUPPORT STRUCTURE COMPONENTS SUCH AS TOP CONNECTION PLATE, SPECIFIC REQUIREMENTS FOR HAND HOLES TO ACCOMMODATE EXTERNAL WINCH, HEADFRAME ASSEMBLY, LUMINAIRE RING ASSEMBLY, AND TOP LATCH LOWERING DEVICE SHALL BE PROVIDED BY CONTRACTOR/FABRICATOR IN COMPLIANCE WITH AASHTO SPECIFICATIONS REFERENCED IN NOTE 1 AND ALL OTHER GOVERNING ELECTRICAL AND MECHANICAL SPECIFICATIONS.

10. THE TOP CONNECTION DETAIL MAY BE REVISED TO COMPLY WITH THE REQUIREMENTS OF THE TOP LATCH LOWERING DEVICE SYSTEM. THE REVISED TOP CONNECTION DETAIL SHALL BE SUBMITTED TO NMDOT FOR REVIEW AND APPROVAL AS PART OF THE DESIGN FOR THE TOP LATCH LOWERING DEVICE SYSTEM.

11. ALL TYPE VI STANDARDS SHALL BE EQUIPPED WITH AN INTERNAL MOTOR ASSEMBLY WITH 20' REMOTE CONTROL FOR THE LOWERING DEVICE. LOWERING DEVICES SHALL BE TOP LATCH AS APPROVED BY LIGHTING DESIGN ENGINEER. THE INTERNAL MOTOR ASSEMBLY AND LOWERING DEVICE WILL BE SUBSIDIARY TO THE HIGH MAST POLE PAY ITEM.

12. THE LOWERING DEVICE, LIGHTING FIXTURES AND POLES SHALL BE MANUFACTURED AND TESTED AS AN INTEGRATED SYSTEM AND BE PROVIDED AND WARRANTED BY THE MANUFACTURER.

13. FACTORY REPRESENTATIVE SHALL PROVIDE ONE DAY TRAINING AND VIDEO TAPE ON OPERATING THE LOWERING DEVICE SYSTEM FOR THE LOCAL MAINTAINING AGENCY AND LOCAL POWER COMPANY. THIS TRAINING SHALL BE APPROXIMATELY ONE-HALF IN THE CLASSROOM AND ONE-HALF IN THE FIELD.

14. APPROXIMATELY 90 DAYS AFTER INSTALLATION, A FACTORY REPRESENTATIVE SHALL RETURN TO THE PROJECT SITE TO ADJUST THE LOWERING DEVICE CABLES AND LATCHING MECHANISMS. THE CONTRACTOR SHALL COORDINATE WITH THE NMDOT LIGHTING ENGINEER, THE LOCAL MAINTENANCE AGENCY, AND THE LOCAL POWER COMPANY TO BE PRESENT WHILE THE ADJUSTMENTS ARE MADE.

15. DURING THE ERECTION OF THE HIGH MAST LIGHTING POLES AND LOWERING DEVICES, A FACTORY REPRESENTATIVE SHALL BE PRESENT TO ENSURE CORRECT ERECTION.

16. CONTRACTOR SHALL PROVIDE COPIES OF ALL HIGH MAST LIGHTING SYSTEM TECHNICAL DATA, CALCULATIONS, SHOP DRAWINGS, AND LUMINAIRE TYPE INFORMATION TO THE LOCAL MAINTAINING AGENCY AND THE LOCAL POWER COMPANY.

17. THE DESIGN PROVIDED FOR THIS STANDARD MUST BE RE-EVALUATED FOR POLES LOCATED IN ELEVATED REGIONS AND POLES LOCATED IN SPECIAL WIND REGIONS

a yes

NO.	DATE

DEPAR

Community-Guided Smart LED Street Lighting Monthly Operations Report

October 2023

Report Date: 11/09/2023

Table of Contents

Energy Savings 3
Lighting Levels & Dark Sky Protection 4
Service 4
- Self-Detection 4
- New Lights Detected Out & Open Cases 5
- O&M and Repairs Activity 5
- Outage Rate 6
- Availability of the Assets 6
- Operational KPI Summary Table 7

Financial Reporting 8
- Operations & Maintenance 8
- Repairs 8
- Additional Work 8

Energy Savings

One of the greatest benefits of the GMPC is the continued energy savings. The conversion of the lights guarantees savings of at least 2,234,042 kWh energy savings. Figure 1 shows the energy consumption of the system before being upgraded to the Community-Guided Smart Lighting Design LED specifications (Ksb) and the energy consumption of the system fully converted to Smart LED (Kpb) today.

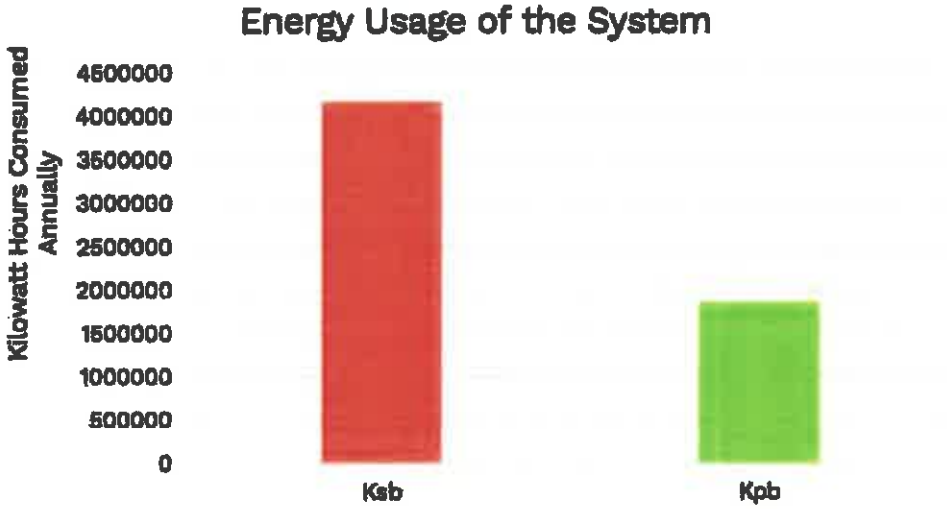

The energy savings captured through the GMPC currently (Ke) is 2,563,317 kWh/year. The *estimated** on-bill electricity savings accumulated through the date of this report is $337,764.58. The estimated annual on-bill savings is $233,060.93.

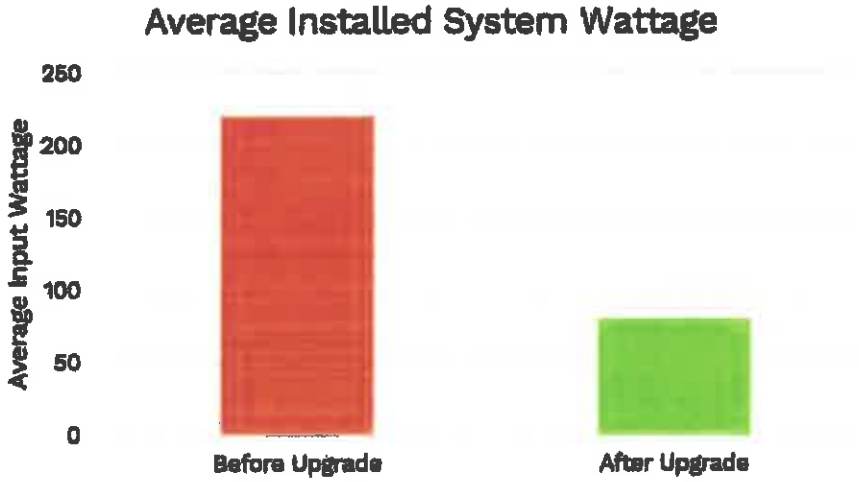

The current average installed wattage of the system (Kw) is 82.8 W.

**based on information Dalkia has provided to PNM.*

Lighting Levels & Dark Sky Protection

The program has increased lighting levels on the roadways across Santa Fe without increasing up lighting through using dark sky friendly luminaires.



Service

Self-Detection

Self-Detection allows Dalkia to proactively monitor the System and respond to outages as quickly as possible. The minimum allowable percentage of self-reported (Smart Node) outages is 75%. This month, the self-detection ratio exceeded this at 97.9%.

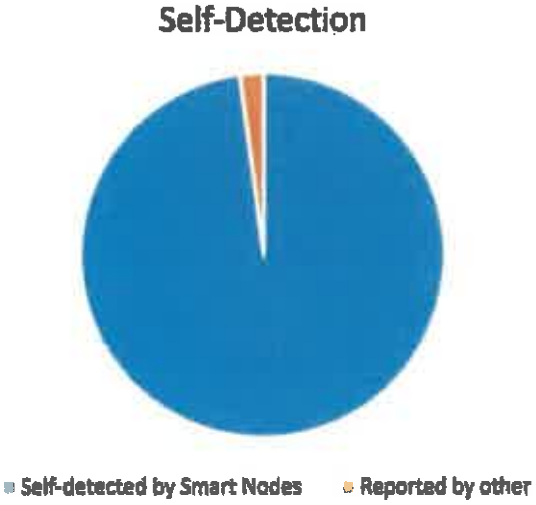

New Lights Detected Out & Open Cases

During the month, 47 incidents were detected or reported out. The table below summarizes the breakdown by fault type along with other new open cases:

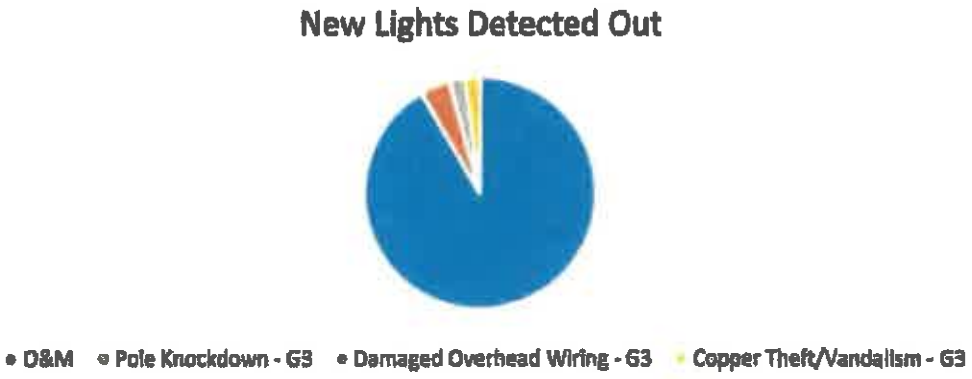

Cases have been opened for all detected outages. For specific inquiries, reach out to Dalkia.

O&M and Repairs Activity

During the previous month, 41 outages were addressed through routine operation and maintenance. Additionally, 8 outages were resolved through unscheduled maintenance.

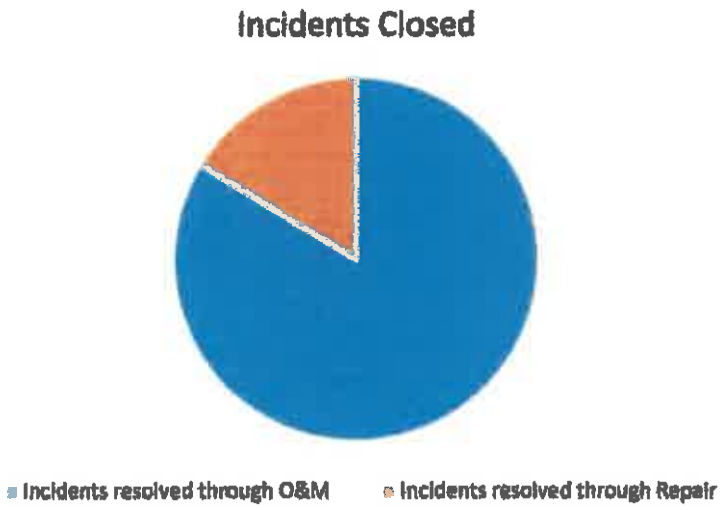

Outage Rate

The outage rate (Ko) is the number of assets out during a given month compared to the total number of existing assets. This KPI measures the maintenance program's efficiency in proactively servicing the System to prevent outages and should be below 2.00%. This month, Ko was 1.1%.



Availability of the Assets

The KPI for the availability of the assets (Ka) measures the average percentage of time that the System is operating on a monthly basis. Dalkia reviews each street light individually to calculate the number of days that each street light is operating and functioning within the respective month.

$$K_a = \frac{\sum_i^N \left(\frac{d_i}{D_a}\right)}{N}$$

$$N = number\ of\ assets\ in\ inventory\ during\ given\ month$$
$$d_i = number\ of\ days\ a\ given\ fixture\ was\ out\ during\ given\ month$$
$$D_a = number\ of\ days\ in\ given\ month$$

Dalkia is responsible for maintaining Ka at 2% or less, such that the average availability of the assets meets or exceeds 98%. During this month, availability was 99.7%.

Operational KPI Summary Table

Category	Sub-Category	Designation	Commitment	Unit	Periodicity	Actual
Energy	Consumptions	Ke- Guaranteed Annual Savings	2,234,042	kWh	Annually	2,563,317
Operations and Maintenance	Operation & Maintenance	Km - Accuracy of CMMS database	97%	% of assets	Monthly	100%
	Maintenance	Kc - Outage Rate	Less than 2%	% of assets	Monthly	1.1%
	Maintenance	Ka - Availability of the assets	More than 98%	% of assets	Monthly	99.7%
	Operations	Ks - Self Detection	More than 75%	% of tickets	Monthly	97.9%
	Operations	Kt - Emergency Response Time	3 Hours	Hour	Per occurrence	0.5
	Operations	Kd1 - Delay of Unscheduled Maintenance or Repairs - single SL*	5 Days	Business Day	Per occurrence	2.6
	Operations	Kd2 - Delay of Unscheduled Maintenance or Repairs - more than 3 single lights in a row	2 Days	Business Day	Per occurrence	N/A
	Operations	Kd3 - Delay of Unscheduled Maintenance or Repairs - Poles, Arms & Foundation	8 Weeks	Standard Week	Per occurrence	4.1
	Operations	Kq - Monthly Report	One Report	Report	Monthly	1
	Operations	Klp - Lighting Performance	100%	% of IES standard values	Annually	N/A
	Operations	Kw - Average Installed Wattage	84	Watts	Annually	82.8

Financial Reporting

Operations & Maintenance

The annual Services payment, adjusted annually to reflect the applicable CPI, is $186,774.12 before applicable tax. This is invoiced in monthly installments of $15,564.51 before applicable tax.

Repairs

Repairs are considered separate scopes of work and, in accordance, independent from the annual Services payment.

During this month, Dalkia completed the pole knockdown at E Alameda St & Shelby St.

Report Number	Location	Pre-tax Total
SF23-029	E Alameda St & Shelby St	$4,764.34

Additional Work

There are currently no additional projects.

City of Santa Fe

Summary of Contract, Agreement, Amendment & Lease

All applicable fields to be completed by department (complete 1.b only if you are processing an amendment):

1.a Munis Contract: 3204540 Procurement # (RFP/ITB# If any): _____

Contractor: Public Service Company of New Mexico (PNM)

Procurement Method: *Small Purchase* *RFP* *ITB* *Sole Source* *GSA* *Cooperative* Exempt ☑

Description/Title: LED Streetlight Conversion for approx 1,100 PNM owned streetlights to meet Roadway Lighting Standards.

Contract: ☐ Agreement: ☑ Lease/Rent: ☐ Amendment: ☐

Term Start Date: _____ Term End Date: TBD Total Contract Amount: $568,511

☐ Approved by Council *(If over the City Manager's approval threshold, you must go through GB)* TBD

Contract / Lease:

1.b Amendment #: _____ to the Original Contract/Lease # _____

Increase/(Decrease) Amount $: _____

Extend Expiration Date to: _____

☐ Approved by Council *(If the original went through GB, all amendments must go through GB regardless of the amendment reason)* Date: _____

Amendment is for:

2. HISTORY of Contract, Amendments & Lease / Rent - Please Elaborate (option: attach spreadsheet if multiple amendments)

04/14/2021 - GB approved contract with PNM to convert 2,000 PNM owned streetlights to LED's

3. Procurement History: Exempt Procurement (NMSA13-1-98.D)

_____ Feb 15, 2024

Purchasing Officer Review: Date:

Comment & Exceptions: _____

4. Funding Source: CIP Resource Conservation **Org / Object:** 3159980-572970

Andy Hopkins _____ Feb 15, 2024

Budget Officer Approval: Date:

Comment & Exceptions: _____

5. Grant History (If applicable): N/A

Grants Administrator Approval: _____ Date _____

Staff Contact who Completed This Form: Amanda Archuleta Phone #: 505-955-6631

To be recorded by City Clerk:

Clerk # _____ Email: ajarchuleta@santafenm.gov

Date of Execution: _____

_____

ITT Representative (attesting that all information is reviewed) Title Date

CITY OF SANTA FE PROCUREMENT CHECKLIST

Contractor Name: PNM (Public Service Company of New Mexico)

Procurement/contract Title: Streetlight Conversion to LED's

Procurement Method: ☐Sole Source ☐State Price Agreement/Existing ☐ Cooperative

☐Request For Proposals(RFP) ☐Invitation To Bid (ITB) ☒Exempt: 13-1-98.D

☐Small Purchase (Contract Under $60,000) ☐Other: _____

Requesting Department: Public Works Staff Name: Mike Dalmolin

Procurement Requirements:

Procurement files shall be maintained for all purchases and contracts, regardless of the method of procurement. The procurement files shall contain the basis on which the awards are made, all submitted bids/proposals, all evaluation materials (bid tabs or Evaluation Committee Reports), scoresheets, quotations, and all other documentation related to or prepared in conjunction with evaluations, negotiations, and the award processes. The procurements shall contain written determinations from the Requesting Departments, signed by the Chief Procurement Officers (this document), setting forth the reasoning for the contract award decisions before submitting them to the Committees.

REQUIRED DOCUMENTS FOR APPROVAL BY PURCHASING

YES	N/A		YES	N/A	
☒	☐	Written Determination (srvs)	☐	☒	Quote(s) (3 Valid & Current for Over 20k)
☐	☒	RFP (include ECR)	☐	☒	BAR
☐	☒	ITB (include bid tab)	☐	☒	FIR
☐	☒	Other: _____	☐	☐	Certificate of Insurance (srvs)
☐	☐	Cooperative Agreements and GSAs and Statewide Price Agreements (include the cover page to show valid date, scope page, and items to be purchased)			
☐	☒	Horizon Declination or Screenshot of horizonsofnewmexico.org/services.html (srvs)			
☒	☐	Summary of Contract (only on contracts)			
☐	☐	Current Business Registration (always)			
☒	☐	Executed Contract or Price Agreement (legal and contractor must sign before purchasing approves)			
☐	☒	Chief Procurement Officer (or designee) Approval for Exempt from Procurement (use memo on our site)			
☐	☒	Evaluation Committee Report (RFPs only)			
☐	☒	Signed Sole Source Determination, Vendor Written Quote, SS Letter from Contractors, and 30 Days Email			
☐	☒	>20k = Memo addressed to City Manager (Under 150K) Committees/City Council (Over 150K)			

Mike Dalmolin — Department Point of Contact

Traffic Operations Engineering Supervisor — Title

01/30/2024 — Date

_____ — Department Director — Date

_____ — Chief Procurement Officer — Feb 15, 2024 — Date

_____ — ITT Representative — Title — Date

CoSF

Version 2 10.17.2023

24-0120 Public Service Company of New Mexico - PNM

Final Audit Report 2024-02-29

Created:	2024-02-29
By:	Xavier Vigil (xivigil@ci.santa-fe.nm.us)
Status:	Signed
Transaction ID:	CBJCHBCAABAAisq9AG-j3HFasdrPeCUDbsRyHrH5b6mt

"24-0120 Public Service Company of New Mexico - PNM" History

Document created by Xavier Vigil (xivigil@ci.santa-fe.nm.us)
2024-02-29 - 9:58:45 PM GMT- IP address: 63.232.20.2

Document emailed to Alan Webber (amwebber@santafenm.gov) for signature
2024-02-29 - 10:00:07 PM GMT

Email viewed by Alan Webber (amwebber@santafenm.gov)
2024-02-29 - 10:17:34 PM GMT- IP address: 104.28.123.135

Document e-signed by Alan Webber (amwebber@santafenm.gov)
Signature Date: 2024-02-29 - 10:17:53 PM GMT - Time Source: server- IP address: 63.232.20.2

Document emailed to Geralyn Cardenas (gfcardenas@santafenm.gov) for signature
2024-02-29 - 10:17:54 PM GMT

Email viewed by Geralyn Cardenas (gfcardenas@santafenm.gov)
2024-02-29 - 10:43:31 PM GMT- IP address: 104.47.64.254

Document e-signed by Geralyn Cardenas (gfcardenas@santafenm.gov)
Signature Date: 2024-02-29 - 10:43:39 PM GMT - Time Source: server- IP address: 63.232.20.2

Agreement completed.
2024-02-29 - 10:43:39 PM GMT

Powered by Adobe Acrobat Sign

ACORD

CERTIFICATE OF LIABILITY INSURANCE

DATE (MM/DD/YYYY)
3/4/2024

THIS CERTIFICATE IS ISSUED AS A MATTER OF INFORMATION ONLY AND CONFERS NO RIGHTS UPON THE CERTIFICATE HOLDER. THIS CERTIFICATE DOES NOT AFFIRMATIVELY OR NEGATIVELY AMEND, EXTEND OR ALTER THE COVERAGE AFFORDED BY THE POLICIES BELOW. THIS CERTIFICATE OF INSURANCE DOES NOT CONSTITUTE A CONTRACT BETWEEN THE ISSUING INSURER(S), AUTHORIZED REPRESENTATIVE OR PRODUCER, AND THE CERTIFICATE HOLDER.

IMPORTANT: If the certificate holder is an ADDITIONAL INSURED, the policy(ies) must have ADDITIONAL INSURED provisions or be endorsed. If SUBROGATION IS WAIVED, subject to the terms and conditions of the policy, certain policies may require an endorsement. A statement on this certificate does not confer rights to the certificate holder in lieu of such endorsement(s).

PRODUCER	CONTACT NAME:	
Alliant Insurance Services, Inc. 701 B St 6th Fl San Diego, CA 92101	PHONE (A/C, No, Ext): (619) 238-1828	FAX (A/C, No):
	E-MAIL ADDRESS:	

INSURER(S) AFFORDING COVERAGE	NAIC #
INSURER A : Liberty Mutual Fire Insurance Company	23035
INSURER B : Liberty Insurance Corporation	42404
INSURER C :	
INSURER D :	
INSURER E :	
INSURER F :	

INSURED

PNM Resources, Inc.
414 Silver Ave SW
Albuquerque, NM 87102

COVERAGES **CERTIFICATE NUMBER:** **REVISION NUMBER:**

THIS IS TO CERTIFY THAT THE POLICIES OF INSURANCE LISTED BELOW HAVE BEEN ISSUED TO THE INSURED NAMED ABOVE FOR THE POLICY PERIOD INDICATED. NOTWITHSTANDING ANY REQUIREMENT, TERM OR CONDITION OF ANY CONTRACT OR OTHER DOCUMENT WITH RESPECT TO WHICH THIS CERTIFICATE MAY BE ISSUED OR MAY PERTAIN, THE INSURANCE AFFORDED BY THE POLICIES DESCRIBED HEREIN IS SUBJECT TO ALL THE TERMS, EXCLUSIONS AND CONDITIONS OF SUCH POLICIES. LIMITS SHOWN MAY HAVE BEEN REDUCED BY PAID CLAIMS.

INSR LTR	TYPE OF INSURANCE	ADDL INSD	SUBR WVD	POLICY NUMBER	POLICY EFF (MM/DD/YYYY)	POLICY EXP (MM/DD/YYYY)	LIMITS	
A	X COMMERCIAL GENERAL LIABILITY			EB2-641-444990-023	6/1/2024	6/1/2025	EACH OCCURRENCE	$ 1,000,000
	CLAIMS-MADE X OCCUR						DAMAGE TO RENTED PREMISES (Ea occurrence)	$ 1,000,000
							MED EXP (Any one person)	$ Excluded
							PERSONAL & ADV INJURY	$ 1,000,000
	GEN'L AGGREGATE LIMIT APPLIES PER:						GENERAL AGGREGATE	$ 10,000,000
	POLICY X PRO-JECT X LOC						PRODUCTS - COMP/OP AGG	$ 10,000,000
	X OTHER: $SIR: $1,000,000							$
A	AUTOMOBILE LIABILITY			AS2-641-444990-135	6/1/2024	6/1/2025	COMBINED SINGLE LIMIT (Ea accident)	$ 1,000,000
	X ANY AUTO						BODILY INJURY (Per person)	$
	OWNED AUTOS ONLY / SCHEDULED AUTOS						BODILY INJURY (Per accident)	$
	HIRED AUTOS ONLY / NON-OWNED AUTOS ONLY						PROPERTY DAMAGE (Per accident)	$
								$
	UMBRELLA LIAB OCCUR						EACH OCCURRENCE	$
	EXCESS LIAB CLAIMS-MADE						AGGREGATE	$
	DED RETENTION $							$
B	WORKERS COMPENSATION AND EMPLOYERS' LIABILITY			WA7-64D-444990-033	6/1/2024	6/1/2025	X PER STATUTE OTH-ER	
	ANY PROPRIETOR/PARTNER/EXECUTIVE OFFICER/MEMBER EXCLUDED? (Mandatory in NH) Y / N: N	N / A					E.L. EACH ACCIDENT	$ 1,000,000
	If yes, describe under DESCRIPTION OF OPERATIONS below						E.L. DISEASE - EA EMPLOYEE	$ 1,000,000
							E.L. DISEASE - POLICY LIMIT	$ 1,000,000

DESCRIPTION OF OPERATIONS / LOCATIONS / VEHICLES (ACORD 101, Additional Remarks Schedule, may be attached if more space is required)

CERTIFICATE HOLDER

City of Santa Fe Public Works Dept
801 W. San Mateo
Santa Fe, NM 87505

CANCELLATION

SHOULD ANY OF THE ABOVE DESCRIBED POLICIES BE CANCELLED BEFORE THE EXPIRATION DATE THEREOF, NOTICE WILL BE DELIVERED IN ACCORDANCE WITH THE POLICY PROVISIONS.

AUTHORIZED REPRESENTATIVE

© 1988-2015 ACORD CORPORATION. All rights reserved.
The ACORD name and logo are registered marks of ACORD

CITY OF SANTA FE

Date: October 29, 2024

To: Governing Body, Finance Committee, and Public Works & Utilities Committee

From: Michael Dalmolin, PE Traffic Operations Engineer

Via: Regina Wheeler, Public Works Department Director

Subject: PNM Streetlight Conversion - Amendment #1

Vendor Name: PNM

Munis Vendor Number: 8279

ACTION:

Request for Approval of the First Amendment to The Agreement for Conversion of Streetlights Owned by the Public Service Company of New Mexico (PNM) Item #24-0120 with PNM to Complete the Conversion of Streetlights to LEDs , Increasing the Compensation by $480,000 to a new Not to Exceed Total Compensation of $1,050,000 Including NMGRT and Extending the Term for One Year.

CONTRACT NUMBER:

The FY24 Munis contract number is 3202638

BACKGROUND AND SUMMARY:

There are approximately 5,600 streetlights in the City of Santa Fe. The City owns approximately 3,500 and PNM owns most of the remaining streetlights within the City.

The conversion of City owned lights was completed in March 2022 and results in approximately 2,560,000 kWh and $230,000 of energy savings each year. LEDs reduce power consumption by 60%, have a longer life span, improve reliability, have full cutoff fixtures protecting the night sky, and can be fit with shields to reduce fugitive light trespass. The new LED streetlights are performing with high reliability, and we have seen a significant decrease in complaints.

PNM is currently completing conversion of approximately 1,100 streetlights, or about half of the PNM-owned lights within the City. Completion is expected by December 2024. The energy and maintenance savings are expected to be $135,000 per year and thus the project would pay for itself in approximately 4 years.

The City and PNM now propose to extend the project to complete the conversion of the remaining 1,000 PNM streetlights. If approved, PNM expects to begin the final phase of their streetlight conversion in early 2025 and to complete the conversion in 4-6 months. PNM's price for LED retrofits is regulated by the PRC. The cost to the City for this conversion is $480,000. A payback analysis conservatively estimates that the second phase will pay for itself within 5 years. This work is being funded by recently appropriated fund balance one time funding.

Public Engagement for the PNM Streetlight Conversion included an Early Neighborhood Notification (ENN) meeting held online on February 22nd. PNM also hosts a public webmap, allowing residents to track the progress of the conversion street by street.

Prior Approvals and Supporting Information:

PROCUREMENT METHOD:

The procurement method used was NMSA 1978, Section 13-1-98, Exempt

Since PNM, the local electric utility company, owns thee lights and PRC regulations define the conversion by PNM.

Chief Procurement Officer (CPO) / Designee: _____ **Date:** Nov 12, 2024
CPO Comment/Exceptions: _____

FUNDING SOURCE:

Fund Name/Number: 1/2 GRT / 365

Munis Org Name/Number: Roadways & Drainage / 3650414

Munis Object Name/Number: WIP Construction / 572970

Budget Officer / Designee: ALEXIS LOTERO (Nov 12, 2024 10:45 MST) **Date:** Nov 12, 2024
Budget Officer Comment/Exceptions: _____

ASSOCIATED APPROVALS:

Does this purchase require any of the following associated approvals: ☐ Yes | ☐ No
(ITT, Vehicles/Fleet, Facilities, Asset, Grant Review)

IT Components included? ☐ Yes | ☒ No
Approval: _____ **Title:** _____ **Date:** _____
Comment/Exceptions: _____

Vehicles included? ☐ Yes | ☒ No
Approval: _____ **Title:** _____ **Date:** _____
Comment/Exceptions: _____

Construction, Facilities, Furniture, Fixtures, Equipment included? ☒ Yes | ☐ No
Approval: _____ **Title:** _____ **Date:** _____
Comment/Exceptions: _____

Capital Asset* or Project ☒ Yes | ☐ No**
Project Ledger #: STREETLTS
(*will this procurement result in a tangible item that costs more than $5,000?)
(**Capital Projects are new and improvement projects that are going to cost $10,000 or more)
Approval: Lisa Storey (Nov 12, 2024 12:23 MST) **Title:** Accounting Manager **Date:** Nov 12, 2024
Comment/Exceptions: to be determined. Most lights are not owned by City, but the project will benefit the city & pay for itself over 5 years.

Is this a Grant Funded Purchase? ☐ Yes | ☒ No
Approval: _____ **Title:** _____ **Date:** _____
Comment/Exceptions: _____

ATTACHMENTS:

Procurement Document: Choose an item.

Vendor's Proposal

Goods/General Services Contract

Original contract packet
First Contract Amendment with Public Service Company of New Mexico
City of Santa Fe Roadway Lighting Guidelines

Reviewed by Halona Crowe

Docusign Envelope ID: 74D8647D-72EF-4265-9E97-E3F751986F87

FIRST AMENDMENT TO THE AGREEMENT FOR CONVERSION OF STREETLIGHTS OWNED BY THE PUBLIC SERVICE COMPANY OF NEW MEXICO Item #24-0120

This First Amendment to the Agreement for Conversion of Streetlights Owned by the Public Service Company of New Mexico ("First Amendment"), executed as of October ___, 2024, is by and between the Public Service Company of New Mexico, a New Mexico corporation ("PNM" or "Company"), and the City of Santa Fe ("Santa Fe" or "City"), a municipal corporation. The Parties may be referred to herein individually as "Party" or collectively as "Parties."

RECITALS

WHEREAS the Parties executed the Agreement for the Conversion of Streetlights Owned by the Public Service Company of New Mexico ("Agreement") in February of 2024;

WHEREAS the Agreement contemplated the conversion of some of the Company's streetlights into light-emitting diode ("LED") lights ("LED Streetlight Conversion Project");

WHEREAS Santa Fe has asked PNM to complete a second phase of the LED Streetlight Conversion Project, which will consist of converting an additional 957 streetlights into LED lights;

WHEREAS the City has appropriated the funds necessary to complete the second phase of the LED Streetlight Conversion Project, which PNM estimates to be Four Hundred Eighty Thousand Dollars and Zero Cents ($480,000.00); and

WHEREAS the Parties wish to amend the Agreement to contemplate the completion of the second phase of the LED Streetlight Conversion Project and payment for same by Santa Fe.

AGREEMENT

NOW, THEREFORE, in consideration of the mutual covenants herein contained, the receipt and sufficiency of which are hereby acknowledged, the Parties hereby agree to the following:

1. Paragraph 3(a) shall be amended as follows:

   Santa Fe agrees to issue a Purchase Order to PNM in the amount of Four Hundred Eighty Thousand Dollars and Zero Cents ($480,000.00) including applicable GRT for the completion of the second phase of the LED Conversion Project, which shall consist of the conversion of 957 additional streetlights into LED lights. The total amount of compensation, including the amount for the original agreement, shall not exceed $1,050,000.00 including GRT.

   The Purchase Order shall memorialize in writing Santa Fe's request that PNM convert the 957 additional Company-owned streetlights to LED lights within the City of Santa Fe in accordance with the Rate Tariff, the Agreement, and this First Amended Agreement. PNM will share with Santa Fe certain information regarding

Docusign Envelope ID: 74D8647D-72EF-4265-9E97-E3F751986F87

Company-owned streetlights, if needed, so that Santa Fe can prepare the Purchase Order contemplated by this section. Such information includes the number of Company-owned streetlights, the geographic location of Company-owned streetlights, and the types of Company-owned streetlights, categorized by light wattage. PNM will also provide Santa Fe with the cost of a conversion to an LED by listing the cost per operational substitute on Appendix A. Santa Fe agrees to include within the Purchase Order the information required by Section 3(b) of the Agreement.

2. Paragraph 1(k) shall be added to the Agreement. Paragraph 1(k) shall state as follows:

   PNM will make a good faith effort to complete the second phase of the LED Conversion Project within twelve (12) months of the execution of the First Amendment to the Agreement, although the Company cannot guarantee an exact date of completion, as such date is likely to fluctuate, and the City recognizes that the estimated timeline may change due to the lead time necessary for procuring fixtures from the manufacturer, which PNM currently estimates to be approximately 6 weeks.

Section 3. All capitalized terms used in this First Amendment and not otherwise defined or modified herein shall have the meanings set forth in the Agreement.

Section 4. Except as expressly amended by this First Amendment, all other terms of the Agreement shall remain in full force and effect.

Section 5. This First Amendment may be executed in one or more counterparts, including by facsimile or electronic signature, but each such counterpart shall be deemed an original and all such counterparts shall be deemed one and the same instrument.

Section 6. This First Amendment contains the entire understanding of the Parties and supersedes all prior agreements and understandings between the Parties relating to the subject matter herein. This First Amendment shall be binding upon and inure to the benefit of the Parties' respective successors and permitted assigns.

[Signature Page Follows]

Docusign Envelope ID: 74D8647D-72EF-4265-9E97-E3F751986F87

CITY OF SANTA FE

By: _____

Alan Webber
Mayor, City of Santa Fe, New Mexico

Attest:

_____
Geralyn Cardenas, Interim City Clerk

City Attorney's Office:

Marcos Martinez
Marcos Martinez (Oct 29, 2024 13:09 MDT)
_____
Senior Assistant City Attorney

Approved for Finances:

Emily K. Oster
_____
Emily Oster, Finance Director

PUBLIC SERVICE COMPANY OF NEW MEXICO

Signed by:
By: _____
B51818D1E09D410...

Mike Mertz
PNM Vice President, New Mexico Operations

City of Santa Fe
New Development
Roadway Lighting Guidelines

SUMMARY

1. Roadway luminaires must meet the following requirements:

Roadway Type	Correlated Color Temperature (Kelvin)	Input Wattage Range (W)	Nominal Lumen Output (lumen) +/- 10%	Minimum Color Rendering Index	IES Distribution	Visual Comfort Refractor	IES TM-15 Backlight, Uplight, and Glare Rating		
							B	U	G
Residential	2700K	28-45	4,000	70	Type 2	Required	1	0	1
Local/Collector	3000K	90-100	8,900	70	Type 2 or Type 3	Required	2	0	2
Major	3000K	190-200	20,000	70	Type 2 or Type 3	Not required	3	0	3

Luminaires must be fitted with a Ubicquia Ubicell control. Full specifications are in Appendix B.

2. Pole and arm composition varies by area in the City of Santa Fe. To expedite approval, seek recommendations based on proposed construction location from the City's street lighting maintenance provider, Dalkia Energy Solutions.

3. Submit a package with the following components
    a. Plans indicating the location, type, and height of both building and ground mounted luminaires; and
    b. Specification sheets for proposed luminaires, arms, poles, foundations, supports, shielding devices, and smart controls; and
    c. Photometric data: provide photometric showing footcandles on the ground or luminaire .ies files with .dwg of proposed layouts. (Examples included in Appendix A)

Submit package to City Traffic Engineer and the City's street lighting maintenance provider, Dalkia Energy Solutions. A response will be provided within five business days.

Jeanne Wolfenbarger <jawolfenbarger@santafenm.gov>
Matt O'Brien <matt.obrien@dalkiasolutions.com>

Appendix A:

EXAMPLE ROADWAY PHOTOMETRICS

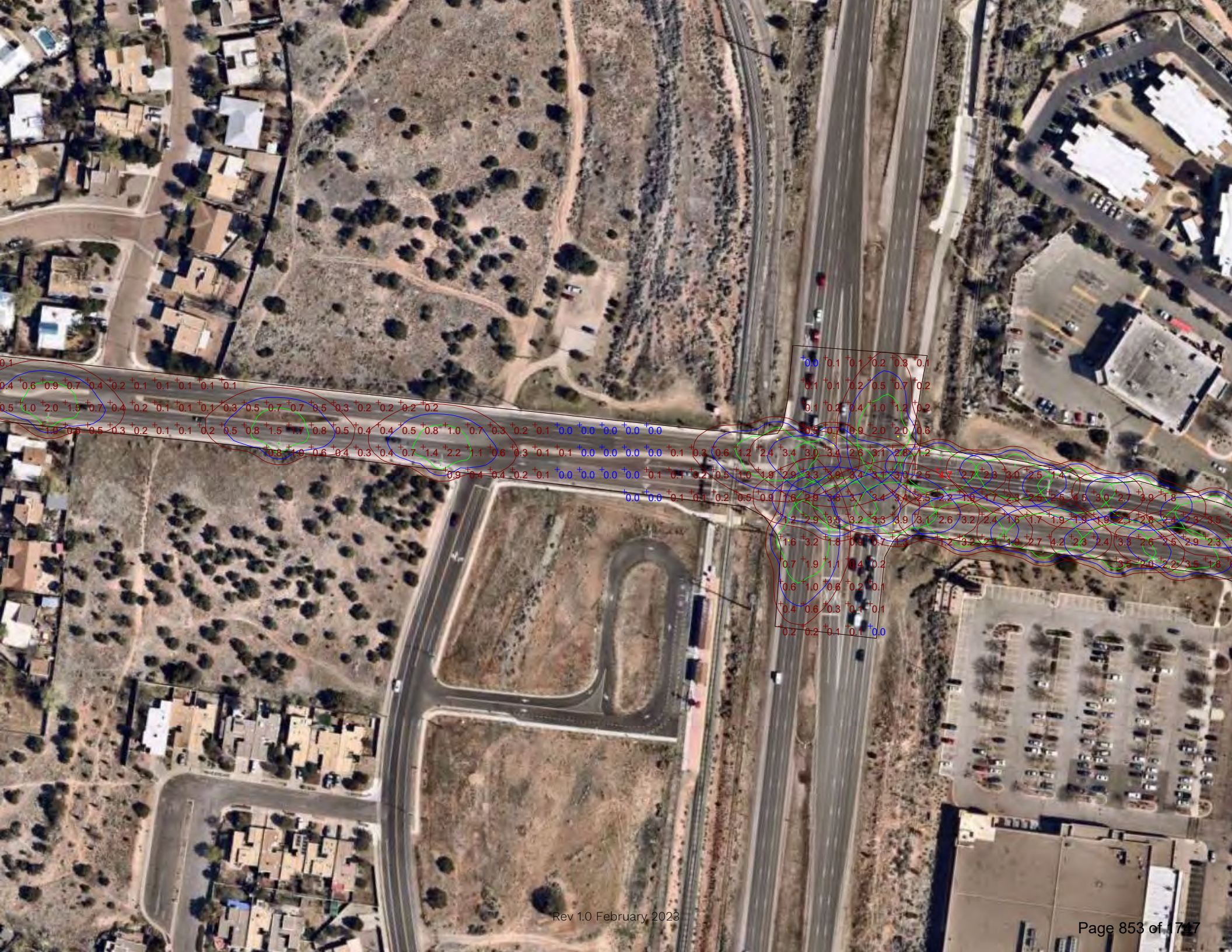

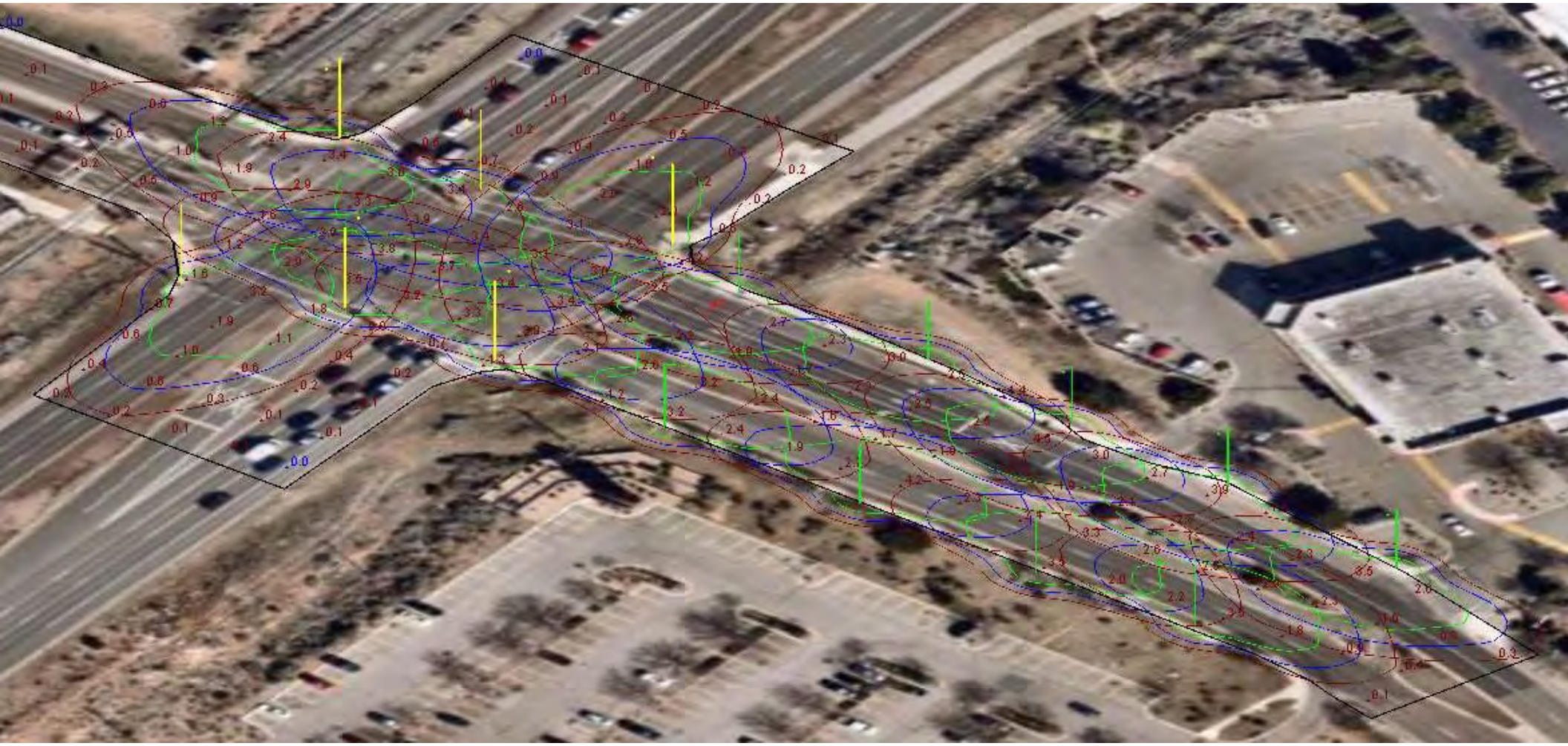

Current View

Appendix B:

COMMUNITY-GUIDED SMART STREET LIGHTING DESIGN SPECIFICATIONS

City of Santa Fe

Department of Public Works

Community-Guided Smart Street Lighting Design Specifications

The City of Santa Fe seeks to convert its existing street lighting assets to smart LED technology in order to "reduce light pollution, reduce or prevent glare, reduce or prevent light trespass, conserve energy, promote a sense of safety and security, and ensure aesthetically appropriate outdoor lighting in keeping with the character of Santa Fe." - (City of Santa Fe Ord. No. 2011-37 § 10)

Following the Community-Guided Design phase outlined in its Global Management Contract with Dalkia, the Department of Public Works is recommending to the Governing Body the smart lighting design summarized in the below table and described with detailed specifications in the following pages.

Roadway Type	Correlated Color Temperature (Kelvin)	Input Wattage Range (W)	Nominal Lumen Output (lumen) +/- 10%	Minimum Color Rendering Index	IES Distribution	Visual Comfort Refractor	IES TM-15 Backlight, Uplight, and Glare Rating		
							B	U	G
Residential	2700K	28-45	4,000	70	Type 2	Required	1	0	1
Local/Collector	3000K	90-100	8,900	70	Type 2 or Type 3	Required	2	0	2
Major	3000K	190-200	20,000	70	Type 2 or Type 3	Not required	3	0	3

Roadway Type	Number of Fixtures	Percentage of Total
Residential	3,137	58%
Local/Collector	1,578	29%
Major	697	13%

In order to develop this Community-Guided Smart Lighting Design Plan, Dalkia worked with multiple stakeholders, including PNM, and compiled various sets of data; evaluated various products and performed a comprehensive set of photometric analyses; gathered community feedback from multiple channels; and combined all analyses into this recommendation. The final plan is designed to be actionable and to provide results in line with the Sustainable Santa Fe 25-Year Plan and the City of Santa Fe's expectations. The City of Santa Fe and Dalkia will work together to develop a dimming strategy to further increase energy savings and dark-sky protection, aligned with dark-sky best practices.

Part A: STREET LIGHTING LIGHT EMITTING DIODE (LED) LUMINAIRE SPECIFICATIONS

1.0 REFERENCES

The publications listed below form a part of this specification to the extent referenced. Publications are referenced within the text by their basic designation only. Versions listed shall be superseded by updated versions as they become available.

1.1 American National Standards Institute (ANSI)
- A. C136.2 (Most current), American National Standard for Roadway and Area Lighting Equipment—Luminaire Voltage Classification
- B. C136.10-2010 (Most current), American National Standard for Roadway and Area Lighting Equipment Locking-Type Photocontrol Devices and Mating Receptacle Physical and Electrical Interchangeability and Testing
- C. C136.15-2011 (Most current), American National Standard for Roadway and Area Lighting Equipment Luminaire Field Identification
- D. C136.25-2009 (Most current), American National Standard for Roadway and Area Lighting Equipment Ingress Protection (Resistance to Dust, Solid Objects and Moisture) for Luminaire Enclosures
- E. C136.31-2010 (Most current), American National Standard for Roadway Lighting Equipment – Luminaire Vibration.
- F. C136.41

1.2 American Society for Testing and Materials International (ASTM)
- A. B117-09 (Most current), Standard Practice for Operating Salt Spray (Fog) Apparatus
- B. D1654-08 (Most current), Standard Test Method for Evaluation of Painted or Coated Specimens Subjected to Corrosive Environments
- C. D523-08 (Most current), Standard Test Method for Specular Gloss
- D. G154-06 (Most current), Standard Practice for Operating Fluorescent Light Apparatus for UV Exposure of Nonmetallic Materials

1.3 Council of the European Union (EC)
- A. RoHS Directive 2002/95/EC, on the restriction of the use of certain hazardous substances in electrical and electronic equipment

1.4 Illuminating Engineering Society of North America (IESNA or IES)
- A. DG-4-03 (Most current), Design Guide for Roadway Lighting Maintenance
- B. HB-10-11 (Most current), IES Lighting Handbook, 10th Edition
- C. LM-50-99 (Most current), IESNA Guide for Photometric Measurement of Roadway Lighting Installations
- D. LM-61-06 (Most current), IESNA Approved Guide for Identifying Operating Factors Influencing Measured Vs. Predicted Performance for Installed Outdoor High Intensity Discharge (HID) Luminaires
- E. LM-79-08 (Most current), IESNA Approved Method for the Electrical and Photometric Measurements of Solid-Sate Lighting Products
- F. LM-80-08 (Most current), IESNA Approved Method for Measuring Lumen Maintenance of LED Light Sources
- G. RP-8-18 (Most current), ANSI / IESNA American National Standard Practice for Roadway Lighting

H. RP-16-10 (Most current), ANSI/IES Nomenclature and Definitions for Illuminating Engineering
I. TM-3-95 (Most current), A Discussion of Appendix E - "Classification of Luminaire Lighting Distribution," from ANSI/IESNA RP-8-83
J. TM-15-11 (Most current), Luminaire Classification System for Outdoor Luminaires
K. TM-21-11 (Most current), Projecting Long Term Lumen Maintenance of LED Light Sources

1.5 National Electrical Manufacturers Association (NEMA)
A. ANSI/NEMA/ANSLG C78.377-2008 (or latest), American National Standard for the Chromaticity of Solid State Lighting Products

1.6 National Fire Protection Association (NFPA)
A. 70 – National Electrical Code (NEC)

1.7 Underwriters Laboratories (UL)
A. 1449, Surge Protective Devices
B. 1598, Luminaires.
C. 8750, Light Emitting Diode (LED) Equipment for Use in Lighting Products LED Roadway Specification

1.8 CSA
1. 1598, Luminaires

2.0 GENERAL CONSTRUCTION

2.1 Shall be compliant with CSA C22.2 No. 250.0-08 – UL 1598 Harmonized Std.
2.2 Luminaire housing to be fabricated from die cast aluminum low copper content alloy.
A. Luminaire housing to act as passive heat sink for LED Array.
B. Housing to be designed in such a manner that debris build-up with-in “heat-fin” structure will not significantly impact lamp lumen depreciation (LLD).
C. Luminaire finish and casting to be tested to ASTM B117 salt fog, and must maintain a scribe creepage rating of 8 per ASTM D1654 after 5000 hours.
D. Access to electrical compartment shall be tool-less by means of a thumb screw.
E. Tool-less access should accommodate user wearing electrical gloves.
2.3 LED light engine
A. Shall be IP66 rated (provide 0% uplight and restrict backlight to within sidewalk depth).
B. Lens shall be created from borosilicate glass.
2.4 Luminaire Attachment
A. Luminaire shall be able to attach to 1 ¼” and/or 2” IPS schedule 40 mast arms (1 5/8” to 2 3/8” OD).
B. Luminaire shall be designed to be able to tilt +/- 5 degrees from horizontal.
C. Luminaire shall be designed to withstand 3G vibration testing prescribed in ANSI C136.31.
D. Luminaire shall include internal integral leveling bubble to assist in the installation.
2.5 Luminaire Markings
A. Shall have external wattage label affixed on underside of luminaire to be seen from ground per ANSI C136.15.
B. Luminaire shall have internal label indicating manufacturer’s name, product name, input voltage and date of manufacture.
2.6 Wildlife shield shall be a cast in feature (not a separate component).

3.0 ELECTRICAL

3.1 All electrical components shall be terminated through the use of quick disconnect couplings.

- A. There shall not be any wire nuts supplied in the luminaire
- B. All luminaires shall be equipped with a 3 station tunnel style terminal block for terminating supply wire.
  1. Terminal block shall accommodate up to 6 AWG conductors.
  2. For ease of installation, the terminal block shall be positioned in such a manner that supply wires do not need to bent or re-routed around components to make electrical termination.
- C. Luminaire shall provide means to protect LED driver and LED lighting array from electrical transients caused by electrical storms or capacitor switching by means of surge protection device.
  1. Surge Protection Device (SPD) shall be UL1449 recognized.
  2. SPD shall be 3 wire and provide both common and differential mode protection.
  3. SPD must have an inductive filter circuit that reduces the amount of energy passed thru to electronics during a surge event.
  4. Surge protection device shall be rated to protect the luminaire up to 10kV/5kA combination wave surges in accordance with ANSI C136.2 (Most Current).
  5. Surge protection shall be thermally fused.
  6. Failure mode of surge protection is to leave luminaire off.
- D. LED Driver shall meet the following minimum requirements
  1. LED Driver shall have a minimum power factor of 90% at full load.
  2. LED Driver THD shall be less than 20% at full load.
  3. LED Driver shall comply with the requirements of UL, CSA, FCC47 subpart 15
  4. LED Driver maximum case temperature shall not be exceeded when luminaire is operating in a 40C ambient.
  5. LED Driver shall be RoHS compliant
  6. LED Driver shall have in ingress protection rating IP66.
- E. Photocontrol receptacle shall comply with ANSI C136.10 for standard 7 PIN configurations. When using smart controls receptacle shall comply with ANSI C136.41.

4.0 LIFE

4.1 Component rated life shall be a minimum of 20 years (or 100,000 hours) when operating in a continuous 25C ambient.

4.2 The design life of the LED array (based on LM80/TM21) shall be defined as L80 at 98,000 hours operation in an ambient of 25C.

5.0 WARRANTY

5.1 Luminaire shall be warranted to be free from manufacturing defects for a minimum period of 10 years.

6.0 LED LUMINAIRE PERFORMANCE

6.1 Residential Roadway LED Luminaires

- A. Correlated Color Temperature (CCT) shall be nominally rated at 2700 Kelvin CCT.
- B. Luminaire input wattage shall be between 28 watts and 45 watts.

C. Luminaire nominal lumen output shall be between 4000 lumens and 5000 lumens.
D. Minimum Color Rendering Index (CRI) shall be 70.
E. Luminaire shall have a distribution pattern consistent with IES RP-8-18 Type II Distribution.
F. Luminaire shall have a maximum BUG rating per IES TM-15 of B1-U0-G1.
G. Product shall have a visual comfort glare reduction refractor.

6.2 Local/Collector Roadway LED Luminaires

A. Correlated Color Temperature (CCT) shall be nominally rated at 3000 Kelvin CCT.
B. Luminaire input wattage shall be between 90 watts and 120 watts.
C. Luminaire nominal lumen output shall be between 8000 lumens and 12000 lumens.
D. Minimum Color Rendering Index (CRI) shall be 70.
E. Luminaire shall have a distribution pattern consistent with IES RP-8-18 Type II or Type III Distribution.
F. Luminaire shall have a maximum BUG rating per IES TM-15 of B2-U0-G2.
G. Product shall have a visual comfort glare reduction refractor.

6.3 Major Roadway LED Luminaires

A. Correlated Color Temperature (CCT) shall be nominally rated at 3000 Kelvin CCT.
B. Luminaire input wattage shall be between 190 watts and 260 watts.
C. Luminaire nominal lumen output shall be between 20000 lumens and 24000 lumens.
D. Minimum Color Rendering Index (CRI) shall be 70.
E. Luminaire shall have a distribution pattern consistent with IES RP-8-18 Type II or Type III Distribution.
F. Luminaire shall have a BUG rating per IES TM-15 of B3-U0-G3.
G. Product shall be Design Lights Consortium (DLC) qualified.

Part 2: SMART CONTROLS

One of the use-cases for smart controls technology on the city's street lighting infrastructure is dimming capability. Dimming control will allow luminaires to be adjusted as an additional mechanism to increase energy savings and dark-sky protection.

7.0 Smart Node Technology

7.1 Node shall have twist-lock controller compatibility with 3, 5 or 7 pin NEMA socket receptacle.
7.2 Node shall utilize AES 128/256-bit encryption in its communication security.
7.3 Node shall function with a 0-10V, DALI or DALI2 driver and will provide a dimming circuit with a range of 0% to 100%.
7.4 Node shall have a single SKU to handle both low voltage and high voltage.
7.5 Node shall have a minimum of 10KV/5KA power surge protection and a single power supply range for 90V to 506V line voltage.
7.6 Node shall have a minimum IP66 rating to withstand harsh weather conditions with a -30C to +70C (-22F to +158F) operating temperature range.
7.7 Node shall utilize LTE CAT-1 cellular communication per module and provide advanced lighting and IoT functions and services to include, but not limited to, Tilt, Scheduling, Dynamic Dimming, Asset Management, GPS, Outage Notification, Traffic Trends, Beaconing, and Utility Grade Power Metering accuracy of ANSI C12.20 Class + or - 0.5.
7.8 Node must have a 10-year warranty and include 10 years of Software as a Service and connectivity.

Appendix C:

EXISTING CITY EQUIPMENT SPECIFICATIONS SHEETS

LUMINAIRE
SPECIFICATIONS SHEETS

Autobahn Series ATBS
Roadway & Security Lighting

Consistent with LEED® goals & Green Globes™ criteria for light pollution reduction

PRODUCT OVERVIEW



Applications:

Residential streets
Parking lots
General security lighting

DIMENSIONS

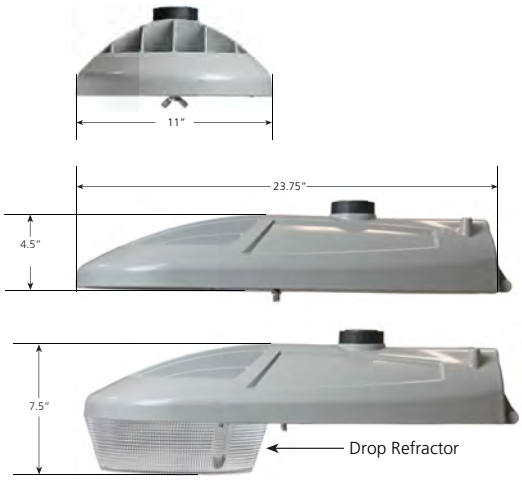

Effective Projected Area (EPA) The EPA for the ATBS is 0.3 sq. ft.,
Approx. Wt. = 12 lbs. (5 kg)

STANDARDS

DesignLights Consortium® (DLC) qualified product. Not all versions of this product may be DLC qualified. Please check the DLC Qualified Products List at www.designlights.org/QPL to confirm which versions are qualified.

Color temperatures of ≤ 3000K must be specified for International Dark-Sky Association certification.

Rated for -40°C to 40°C ambient
CSA Certified to U.S. and Canadian standards
Complies with ANSI: C136.2, C136.10, C136.14, C136.31, C136.15, C136.37

Features:

OPTICAL

Same Light: Performance is comparable to 100W – 200W HPS and up to 175W Mercury Vapor roadway and security lighting luminaires.

White Light: Correlated color temperature - 4000K, 70 CRI minimum, 3000K, 70 CRI minimum or optional 5000K, 70 CRI minimum.

IP66 rated borosilicate glass optics ensure longevity and minimize dirt depreciation. Unique IP66 rated LED light engines provide 0% uplight and restrict backlight to within sidewalk depth, providing optimal application coverage and optimal pole spacing.

Available distributions are Type II, III, and V roadway distributions. When used with the optional acrylic refractor the unit provides approximately 10% uplight and increased vertical foot-candles

ELECTRICAL

Expected Life: LED light engines are rated >100,000 hours at 25°C, L70. Electronic driver has an expected life of 100,000 hours at a 25°C ambient.

Lower Energy: Saves an expected 40-60% over comparable HID luminaires.

Standard surge protection is 20kV/10kA "Extreme Level" per ANSI C136.2. An optional MOV pack provides 10kV/5kA "Enhanced Level".

MECHANICAL

Includes standard AEL lineman-friendly features such as tool-less entry, 3 station terminal block and quick disconnects. Bubble level located inside the electrical compartment for easy leveling at installation.

Rugged die-cast aluminum housing and door are polyester powder-coated for durability and corrosion resistance. Rigorous five-stage pre-treating and painting process yields a finish that achieves a scribe creepage rating of 8 (per ASTM D1654) after over 5000 hours exposure to salt fog chamber (operated per ASTM B117).

Mast arm mount is adjustable for arms from 1-1/4" to 2" (1-5/8" to 2-3/8" O.D.) diameter. The 2 – bolt clamping mechanism provides 3G vibration rating per ANSI C136.31.

The Wildlife shield is cast into the housing (not a separate piece).

CONTROLS

NEMA 3 pin photocontrol receptacle is standard, with the Acuity designed ANSI standard 7 pin receptacles optionally available.

Premium solid state locking-style photocontrol – PCSS (10 year rated life) Extreme long life solid state locking-style photocontrol – PCL1 (20 year rated life)

Optional onboard Adjustable Output module allows the light output and input wattage to be modified to meet site specific requirements, and also can allow a single fixture to be flexibly applied in many different applications.

Note: Actual performance may differ as a result of end-user environment and application. Specifications subject to change without notice.

© 2014-2021 Acuity Brands Lighting, Inc.

ORDERING INFORMATION

Series

ATBS Autobahn LED Roadway & Security

Performance Packages

P10 5,500 lumens
P20 6,800 lumens
P30 8,300 lumens
P40 9,400 lumens
P50 10,800 lumens
P60[4] 11,850 lumens

Voltage

MVOLT Multi-volt, 120-277V
347 347V
480 480V

Optics

R2 Roadway Type II
R3 Roadway Type III
R5 Roadway Type V
D3 Type III, Drop Refractor included
D5 Type V, Drop Refractor included

Options

Color Temperature (CCT)
(Blank) 4000K CCT, 70 CRI Min.
3K 3000K CCT, 70 CRI Min.
5K 5000K CCT, 70 CRI Min.

Paint
Blank Gray (Standard)
BK Black
WH White
BZ Bronze

Surge Protection
Blank Standard 20kV/10kA SPD
MP MOV Pack 10kV/5kA

Misc.
HS House Side Shield
NL NEMA Label
XL Not CSA Certified
VR[3] Visual Comfort Optic
UMR-XX 8" Horizontal Arm for Round Pole, Painted to match Fixture
UMS-XX 8" Horizontal Arm for Square Pole, Painted to match Fixture
UMR-GALV 8" Horizontal Arm for Round Pole, Painted to match Fixture
UMS-GALV 8" Horizontal Arm for Square Pole, Painted to match Fixture

Controls
(Blank) 3 Pin NEMA Photocontrol Receptacle
NR[1] No Photocontrol Receptacle
DM[2] 0V-10V Dimmable Driver
P7 7 Pin Photocontrol Receptacle (dimmable driver included)
PCSS[1] DTL DSS Photocontrol
PCL1[1] DTL DLL Photocontrol 120-277V
AO Field Adjustable Output
SH Shorting Cap

Packages
(Blank) Standard Pack
JP Job Pack (54/pallet)

Install Packages
PKGS DTL DSS Photocontrol
PKGL DTL DLL Photocontrol
Packages ship with selected photocontrol, 24", 1 1/4" diameter arm, 5' of prewire and mounting hardware

Accessories
ATBSREF Drop Refractor for field installation
ATBSHSS House Side Shield for field installation
ATBSLTS Light Trespass Shield for field installation
ATBS LOUVER KIT Louver Kit for field installation
ATBSVR-XX Visual Comfort Refractor and painted skirt for field installation

Notes
1. Not available with Install Packages.
2. Not available with AO option.
3. Not available with D3 or D5 option.
4. Not available with 347V and 480V supply voltage options.

American Electric Lighting
AEL Headquarters, 3825 Columbus Road, Granville, OH 43023
www.americanelectriclighting.com
© 2014-2021 Acuity Brands Lighting, Inc. All Rights Reserved. Rev. 04/08/21 ATBS

Warranty Five-year limited warranty. Complete warranty terms located at: www.acuitybrands.com/support/customer-support/terms-and-conditions
Actual performance may differ as a result of end-user environment and application. All values are design or typical values, measured under laboratory conditions at 25 °C. Specifications subject to change without notice.

Please contact your sales representative for the latest product information.

PERFORMANCE PACKAGE

ATBS

Performance Package	Distribution	Input Watts	3K (3000K CCT, 70 CRI)					4K/5K (4000K/5000K CCT, 70 CRI)					LLD @ 25°C		
			Lumens	LPW	B	U	G	Lumens	LPW	B	U	G	50k Hours	75k Hours	100k Hours
P10	R2	40	5,360	134	1	0	2	5,577	139	1	0	2	0.92	0.89	0.85
	R3		5,287	132	1	0	1	5,524	138	1	0	1			
	R5		5,576	139	3	0	1	5,758	144	3	0	1			
	D3		4,963	124	1	3	3	5,163	129	1	3	3			
	D5		5,372	134	2	3	3	5,590	140	2	3	3			
P20	R2	50	6,707	134	1	0	2	6,809	136	1	0	2	0.92	0.89	0.85
	R3		6,687	134	2	0	2	6,760	135	2	0	2			
	R5		6,926	139	3	0	1	7,108	142	3	0	1			
	D3		6,496	130	2	3	4	6,244	125	1	3	4			
	D5		7,032	141	3	4	4	7,317	146	3	4	4			
P30	R2	60	8,092	135	2	0	2	8,067	134	1	0	1	0.92	0.89	0.85
	R3		7,971	133	2	0	2	8,328	139	2	0	2			
	R5		8,470	141	3	0	2	8,760	146	3	0	2			
	D3		7,491	125	2	3	4	7,795	130	2	3	4			
	D5		8,110	135	3	4	4	8,438	141	3	4	4			
P40	R2	70	9,138	131	2	0	2	9,533	136	2	0	2	0.92	0.89	0.85
	R3		9,136	131	2	0	2	9,355	134	2	0	2			
	R5		9,868	141	3	0	2	9,710	139	3	0	2			
	D3		8,460	121	2	3	4	8,802	126	2	3	5			
	D5		9,158	131	3	4	5	9,529	136	3	4	5			
P50	R2	82	10,628	130	2	0	3	10,829	132	2	0	3	0.92	0.89	0.85
	R3		10,624	130	2	0	2	10,826	132	2	0	2			
	R5		11,450	140	4	0	2	11,181	136	4	0	2			
	D3		10,143	124	2	4	5	10,553	129	2	4	5			
	D5		10,651	130	3	4	5	11,082	135	3	4	5			
P60	R2	92	11,050	120	2	0	3	11,848	129	2	0	3	0.92	0.89	0.85
	R3		10,911	119	2	0	2	11,862	129	2	0	2			
	R5		12,199	133	4	0	2	12,756	139	4	0	2			
	D3		10,230	111	2	4	5	10,644	116	2	4	5			
	D5		11,074	120	3	4	5	11,523	125	3	4	5			

ATBS with VR

Performance Package	Distribution	Input Watts	3K (3000K CCT, 70 CRI)					4K/5K (4000K/5000K CCT, 70 CRI)					LLD @ 25°C		
			Lumens	LPW	B	U	G	Lumens	LPW	B	U	G	50k Hours	75k Hours	100k Hours
P10	R2 with VR	40	4,450	111	1	0	1	4,561	114	1	0	1	0.92	0.89	0.85
	R3 with VR		4,273	107	1	0	1	4,605	115	1	0	1			
	R5 with VR		4,539	113	2	0	1	4,679	117	2	0	1			
P20	R2 with VR	50	5,491	110	1	0	1	5,550	111	1	0	1	0.92	0.89	0.85
	R3 with VR		5,379	108	1	0	1	5,582	112	2	0	1			
	R5 with VR		5,647	113	2	0	1	5,692	114	2	0	1			
P30	R2 with VR	60	6,479	108	2	0	1	6,530	109	2	0	1	0.92	0.89	0.85
	R3 with VR		6,400	107	2	0	1	6,564	109	2	0	1			
	R5 with VR		6,703	112	3	0	1	6,693	112	2	0	1			
P40	R2 with VR	70	7,307	104	2	0	1	7,561	108	2	0	1	0.92	0.89	0.85
	R3 with VR		7,347	105	2	0	1	7,638	109	2	0	1			
	R5 with VR		7,693	110	3	0	1	7,749	111	3	0	1			
P50	R2 with VR	82	8,552	104	2	0	2	8,711	106	2	0	2	0.92	0.89	0.85
	R3 with VR		8,494	104	2	0	1	8,814	107	2	0	1			
	R5 with VR		8,895	108	3	0	1	8,911	109	3	0	1			
P60	R2 with VR	92	8,989	98	2	0	2	9,815	107	2	0	2	0.92	0.89	0.85
	R3 with VR		8,899	97	2	0	1	9,857	107	2	0	2			
	R5 with VR		9,309	101	3	0	1	10,256	111	3	0	1			

Note: Individual fixture performance may vary. Specifications subject to change without notice.

© 2014-2021 Acuity Brands Lighting, Inc. All Rights Reserved.

Warranty Five-year limited warranty. Complete warranty terms located at: www.acuitybrands.com/support/customer-support/terms-and-conditions
Actual performance may differ as a result of end-user environment and application.
All values are design or typical values, measured under laboratory conditions at 25 °C.
Specifications subject to change without notice.

Please contact your sales representative for the latest product information.

UMR POLE ADAPTOR

RECOMMENDED FOR USE WITH POLES OF 4" DIAMETER OR SMALLER

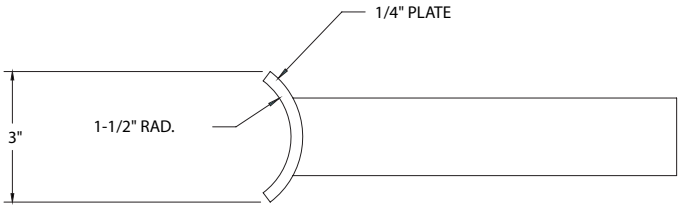

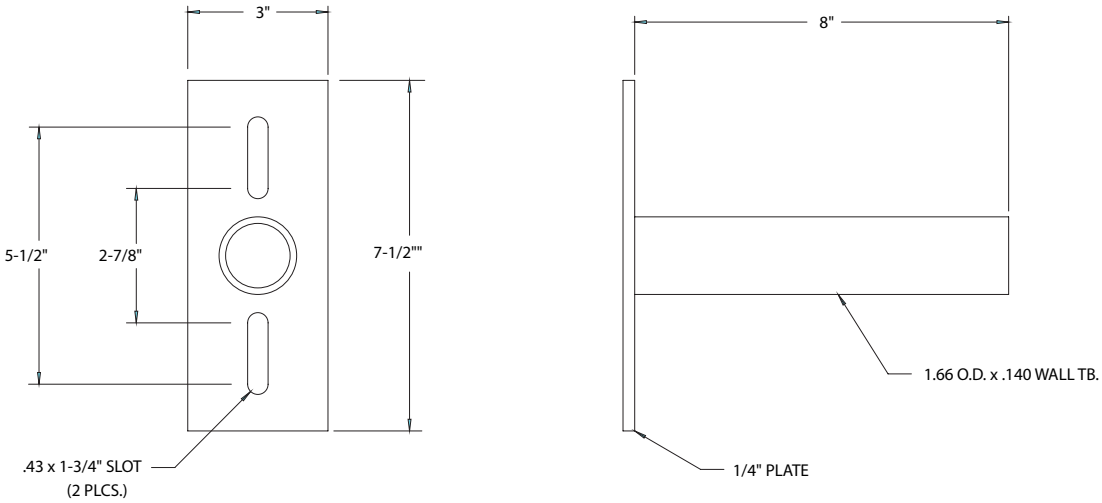

UMS POLE ADAPTOR

© 2014-2021 Acuity Brands Lighting, Inc. All Rights Reserved.

Warranty Five-year limited warranty. Complete warranty terms located at: www.acuitybrands.com/support/customer-support/terms-and-conditions
Actual performance may differ as a result of end-user environment and application.
All values are design or typical values, measured under laboratory conditions at 25 °C.
Specifications subject to change without notice.

Please contact your sales representative for the latest product information.

Consistent with LEED® goals & Green Globes™ criteria for light pollution reduction

Autobahn Series ATBM
Roadway

PRODUCT OVERVIEW

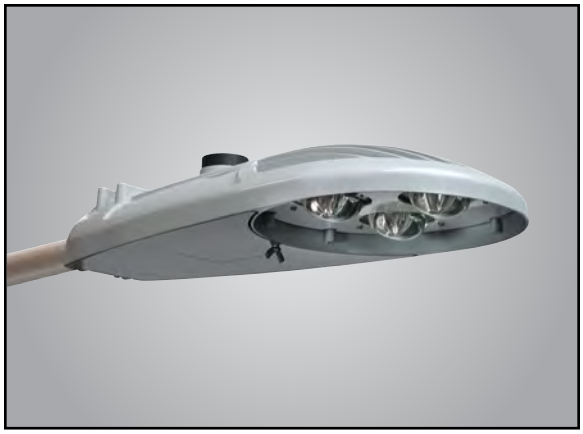

Applications:

Residential streets
Parking lots
High speed roadways

DIMENSIONS

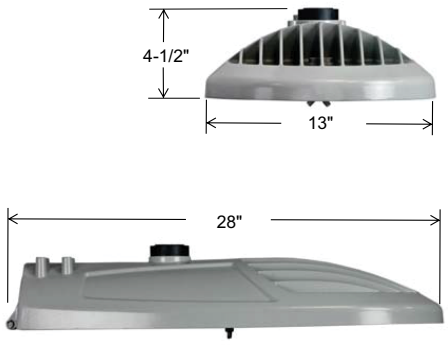

Effective Projected Area (EPA)
The EPA for the ATBM is 0.3 sq. ft.,
Approx. Wt. = 21 lbs. (9.5 kg)

STANDARDS

Color temperatures of ≤ 3000K must be specified for International Dark-Sky Association certification.

Rated for -40°C to 40°C ambient
CSA Certified to U.S. and Canadian standards
Complies with ANSI: C136.2, C136.10, C136.14, C136.31, C136.15, C136.37

Features:

OPTICAL

Same Light: Performance is comparable to 150W – 250W HPS

White Light: Correlated color temperature - 4000K, 70 CRI minimum, 3000K, 70 CRI minimum or optional 5000K, 70 CRI minimum.

IP66 rated borosilicate glass optics ensure longevity and minimize dirt depreciation. Unique IP66 rated LED light engines provide 0% uplight and restrict backlight to within sidewalk depth, providing optimal application coverage and optimal pole spacing.

Available distributions are Type II, III, IV, & V roadway distributions.

DualOptix™ visual comfort option is also available for all distributions.

ELECTRICAL

Expected Life: LED light engines are rated >100,000 hours at 25°C, L70. Electronic driver has an expected life of 100,000 hours at a 25°C ambient.

Lower Energy: Saves an expected 40-60% over comparable HID luminaires.

Robust Surge Protection: Standard surge protection is 20kV/10kA "Extreme Level" per ANSI C136.2. An optional MOV pack provides 10kV/5kA "Enhanced Level.

MECHANICAL

Includes standard AEL lineman-friendly features such as tool-less entry, 3 station terminal block and quick disconnects. Bubble level located inside the electrical compartment for easy leveling at installation.

Rugged die-cast aluminum housing and door are polyester powder-coated for durability and corrosion resistance. Rigorous five-stage pre-treating and painting process yields a finish that achieves a scribe creepage rating of 8 (per ASTM D1654) after over 5000 hours exposure to salt fog chamber (operated per ASTM B117).

Mast arm mount is adjustable for arms from 1-1/4" to 2" (1-5/8" to 2-3/8" O.D.) diameter. The 2 – bolt and optional 4 bolt clamping mechanism provide 3G vibration rating per ANSI C136.31.

The Wildlife shield is cast into the housing (not a separate piece).

CONTROLS

NEMA 3 pin photocontrol receptacle is standard, with the Acuity designed ANSI standard 7 pin receptacle optionally available.

Premium solid state locking-style photocontrol – PCSS (10 year rated life) Extreme long life solid state locking-style photocontrol – PCL1 (20 year rated life).

Extreme long life solid state locking-style photocontrol with on demand remote on/off control - PCCC (15 year rated life).

Optional onboard Adjustable Output module allows the light output and input wattage to be modified to meet site specific requirements, and also can allow a single fixture to be flexibly applied in many different applications.

ORDERING INFORMATION

Series	Performance Packages	Voltage	Optics	Mounting
ATBM Autobahn LED Roadway	**P05** 9,700 lumens **P10** 11,000 lumens **P20** 12,800 lumens **P30** 15,500 lumens **P40** 17,400 lumens **P50** 18,700 lumens **P60** 20,000 lumens **P70** 21,500 lumens	**MVOLT** Multi-volt, 120-277V **347** 347V **480** 480V	**R2** Roadway Type II **R3** Roadway Type III **R4** Roadway Type IV **R5** Roadway Type V	**(Blank)** 2 Bolt Mounting **4B** 4 Bolt Mounting

Options

Color Temperature (CCT)
- **(Blank)** 4000K CCT, 70 CRI Min.
- **3K** 3000K CCT, 70 CRI Min.
- **5K** 5000K CCT, 70 CRI Min.

Paint
- **(Blank)** Gray
- **BK** Black
- **BZ** Bronze
- **DDB** Dark Bronze
- **GI** Graphite
- **WH** White

Surge Protection
- **(Blank)** Standard 20kV/10kA SPD
- **MP** MOV Pack

Miscellaneous Options
- **HSS** House Side Shield
- **NL** NEMA Label Indicating Wattage
- **XL** Not CSA Certified – No Terminal Block Cover
- **VR**[5] Dual Optix visual comfort
- **UMR-XX** 8" Horizontal Arm for Round Pole, Painted to match Fixture
- **UMS-XX** 8" Horizontal Arm for Square Pole, Painted to match Fixture
- **UMR-GALV** 8" Horizontal Arm for Round Pole, Galvanized
- **UMS-GALV** 8" Horizontal Arm for Square Pole, Galvanized

Control Options
- **(Blank)** 3 Pin NEMA Photocontrol Receptacle
- **P7** 7 Pin Photocontrol Receptacle (dimmable driver included) [1]
- **NR** No Photocontrol Receptacle
- **AO** Field Adjustable Output [3]
- **DM** 0-10V Dimmable Driver [2]
- **PCSS** Solid-State Lighting Photocontrol [4]
- **PCLL** Solid-State Long Life Photocontrol
- **PCCC** Solid-State Long Life Photocontrol with remote control on/off [4]
- **SH** Shorting Cap

Packages
- **(Blank)** Standard Pack
- **JP** Job Pack (36/pallet)

Accessories
- **ATBMHSS** House Side Shield
- **ATBMLTS** Light Trespass Shield
- **RKATBMMVOLTSPD** ATBM Acuity SPD, MVOLT
- **RKATBMHVSPD** ATBM Acuity SPD, 347/480V
- **RKATBMMVOLTMP** ATBM MOV Pack, MVOLT
- **RKATBMHVMP** ATBM MOV Pack, 347/480V

Notes:
1. Dimmable Driver included. Not available with DM or NR.
2. Controls by others. Not available with P7 or AO.
3. Not available with DM.
4. MVOLT only.
5. VR option does not provide zero uplight performance.

American Electric Lighting®
AEL Headquarters, 3825 Columbus Road, Granville, OH 43023
www.americanelectriclighting.com
© 2014-2021 Acuity Brands Lighting, Inc. All Rights Reserved. 03/10/21

Warranty Five-year limited warranty. Complete warranty terms located at: www.acuitybrands.com/support/warranty/terms-and-conditions
Actual performance may differ as a result of end-user environment and application. Specifications subject to change without notice.

Please contact your sales representative for the latest product information.

PERFORMANCE PACKAGE

Performance Package	Distribution	Input Watts	3K (3000K CCT, 70 CRI)					4K/5K (4000K/5000K CCT, 70 CRI)					LLD @ 25ºC		
			Lumens	LPW	B	U	G	Lumens	LPW	B	U	G	25k Hours	75k Hours	100k Hours
P05	R2	68	9,396	138	1	0	2	9,718	143	1	0	2	0.93	0.86	0.83
	R3		9,366	138	1	0	3	9,688	142	1	0	3			
	R4		9,030	133	1	0	3	9,340	137	1	0	3			
	R5		10,334	152	3	0	2	10,689	157	3	0	2			
P10	R2	81	10,635	131	2	0	3	11,299	139	2	0	3	0.93	0.86	0.83
	R3		10,675	132	2	0	3	11,302	140	2	0	3			
	R4		10,391	128	2	0	4	10,994	136	2	0	4			
	R5		11,504	142	3	0	2	12,086	149	3	0	2			
P20	R2	94	12,073	128	2	0	3	12,874	137	2	0	3	0.93	0.86	0.83
	R3		12,065	128	2	0	3	12,818	136	2	0	3			
	R4		11,946	127	2	0	4	12,525	133	2	0	4			
	R5		13,085	139	4	0	2	13,776	147	4	0	2			
P30	R2	118	14,637	124	2	0	3	15,514	131	2	0	3	0.93	0.86	0.83
	R3		14,631	124	2	0	3	15,452	131	2	0	3			
	R4		14,317	121	2	0	4	15,151	128	2	0	5			
	R5		15,775	134	4	0	2	16,685	141	4	0	2			
P40	R2	135	16,233	120	2	0	3	17,493	130	2	0	3	0.93	0.86	0.83
	R3		16,402	121	2	0	3	17,367	129	2	0	3			
	R4		15,911	118	2	0	5	17,008	126	2	0	5			
	R5		17,507	130	4	0	2	18,595	138	4	0	2			
P50	R2	152	17,541	115	2	0	3	18,748	123	2	0	3	0.93	0.86	0.83
	R3		17,677	116	2	0	4	18,712	123	2	0	4			
	R4		17,154	113	2	0	5	18,246	120	2	0	5			
	R5		19,008	125	4	0	2	20,088	132	4	0	2			
P60	R2	168	18,770	112	2	0	3	20,095	120	3	0	3	0.93	0.86	0.83
	R3		18,830	112	2	0	4	20,094	120	3	0	4			
	R4		18,369	109	2	0	5	19,648	117	2	0	5			
	R5		20,350	121	4	0	2	21,505	128	4	0	2			
P70	R2	190	20,190	106	3	0	3	21,565	114	3	0	3	0.93	0.86	0.83
	R3		20,142	106	3	0	4	21,504	113	3	0	4			
	R4		19,660	103	2	0	5	21,024	111	3	0	5			
	R5		21,988	116	4	0	2	23,076	121	4	0	2			

Note: Individual fixture performance may vary. Specifications subject to change without notice.

© 2014-2021 Acuity Brands Lighting, Inc. All Rights Reserved. 03/10/21

Warranty Five-year limited warranty. Complete warranty terms located at:
www.acuitybrands.com/support/warranty/terms-and-conditions
Actual performance may differ as a result of end-user environment and application.
Specifications subject to change without notice.

Please contact your sales representative for the latest product information.

PERFORMANCE PACKAGE

ATBM with DualOptix	Distribution	Input Watts	3000K					4000K/5000K					LDD @ 25°C		
			Lumens	LPW	B	U	G	Lumens	LPW	B	U	G	50k Hours	75k Hours	100k Hours
P05	R2 with VR	68	8,323	122	2	3	3	8,609	127	2	3	3	0.93	0.86	0.83
	R3 with VR		8,296	122	2	3	3	8,581	126	2	3	3			
	R4 with VR		7,998	118	2	3	4	8,273	122	2	3	4			
	R5 with VR		9,154	135	3	3	3	9,468	139	3	3	3			
P10	R2 with VR	81	9,421	116	2	3	3	10,009	124	2	3	3	0.93	0.86	0.83
	R3 with VR		9,456	117	2	3	4	10,012	124	2	3	4			
	R4 with VR		9,204	114	2	3	4	9,738	120	2	3	4			
	R5 with VR		10,191	126	3	3	3	10,706	132	3	3	3			
P20	R2 with VR	94	10,694	114	2	3	4	11,404	121	2	3	4	0.93	0.86	0.83
	R3 with VR		10,687	114	2	3	4	11,354	121	2	3	4			
	R4 with VR		10,581	113	2	3	5	11,094	118	2	3	5			
	R5 with VR		11,591	123	3	3	3	12,203	130	3	3	3			
P30	R2 with VR	118	12,966	110	2	3	4	13,742	116	2	3	4	0.93	0.86	0.83
	R3 with VR		12,960	110	2	3	4	13,687	116	2	3	5			
	R4 with VR		12,681	107	2	3	5	13,420	114	2	3	5			
	R5 with VR		13,974	118	3	3	3	14,780	125	3	3	3			
P40	R2 with VR	135	14,379	107	2	3	4	15,495	115	3	3	5	0.93	0.86	0.83
	R3 with VR		14,529	108	2	3	5	15,384	114	3	3	5			
	R4 with VR		14,093	104	2	3	5	15,066	112	3	3	5			
	R5 with VR		15,508	115	3	3	3	16,471	122	4	3	3			
P50	R2 with VR	152	15,538	102	3	3	5	16,607	109	3	3	5	0.93	0.86	0.83
	R3 with VR		15,658	103	3	3	5	16,575	109	3	3	5			
	R4 with VR		15,195	100	3	3	5	16,162	106	3	3	5			
	R5 with VR		16,837	111	4	3	3	17,794	117	4	3	4			
P60	R2 with VR	168	16,626	99	3	3	5	17,800	106	3	3	5	0.93	0.86	0.83
	R3 with VR		16,679	99	3	3	5	17,799	106	3	3	5			
	R4 with VR		16,271	97	3	3	5	17,404	104	3	3	5			
	R5 with VR		18,026	107	4	3	4	19,049	113	4	3	4			
P70	R2 with VR	190	17,884	94	3	3	5	19,102	101	3	3	5	0.93	0.86	0.83
	R3 with VR		17,842	94	3	3	5	19,048	100	3	3	5			
	R4 with VR		17,415	92	3	3	5	18,623	98	3	3	5			
	R5 with VR		19,477	103	4	3	4	20,440	108	4	3	4			

© 2014-2021 Acuity Brands Lighting, Inc. All Rights Reserved. 03/10/21

Warranty Five-year limited warranty. Complete warranty terms located at:
www.acuitybrands.com/support/warranty/terms-and-conditions
Actual performance may differ as a result of end-user environment and application.
Specifications subject to change without notice.

Please contact your sales representative for the latest product information.

UMR POLE ADAPTOR

RECOMMENDED FOR USE WITH POLES OF 4" DIAMETER OR SMALLER

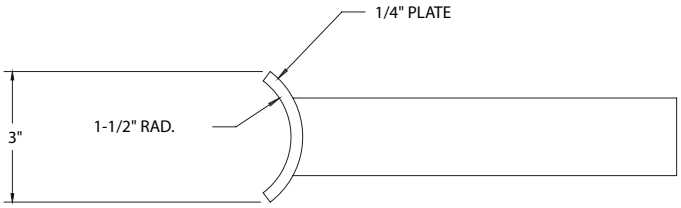

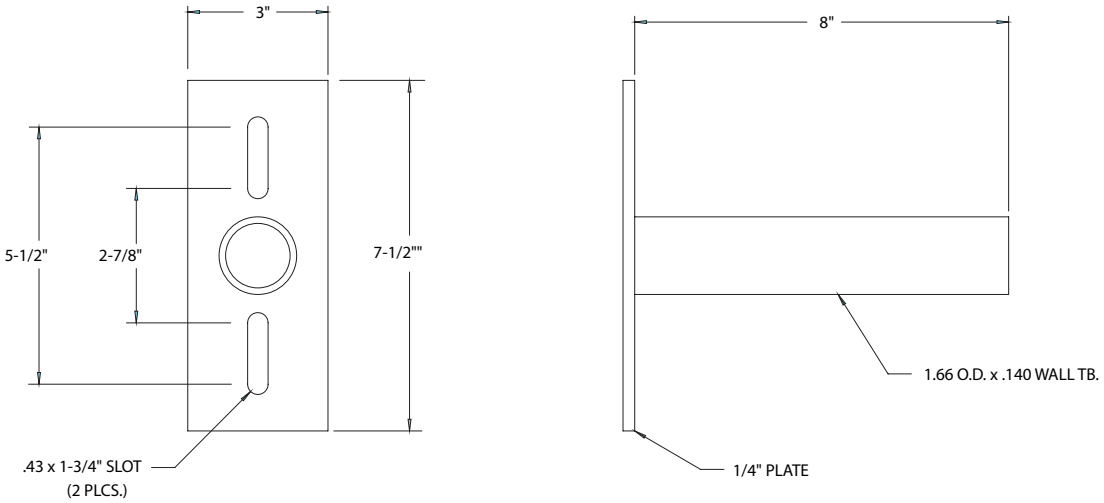

UMS POLE ADAPTOR

© 2014-2021 Acuity Brands Lighting, Inc. All Rights Reserved. 03/10/21

Warranty Five-year limited warranty. Complete warranty terms located at:
www.acuitybrands.com/support/warranty/terms-and-conditions
Actual performance may differ as a result of end-user environment and application.
Specifications subject to change without notice.

Please contact your sales representative for the latest product information.

SMART CONTROL
SPECIFICATIONS SHEETS

Ubicell Model 2.0 Smart Streetlight Controller

ubicell™

Specifications

Lamp Interface	LED, CF and HID
Lamp Power	960W@480V, 554W@277V, 480W@240V, 240W@120V
On/Off	Photocell control, software programmable
Dimming Controls	PWM, 0-10V, DALI, DALI2
Dimming Range	DIM 1 - 0-10V PWM, ability to detect stray voltage but prohibits external sensor use DIM 2 - 0-10V PWM, ability to hardwire an external sensor, but prohibits the ability to detect stray voltage DIM 3 - DALI enabled, ability to hardwire an external sensor, plus the ability to detect stray voltage
External Sensor Interface	DALI/DALI 2
Communication Module	LTE CAT-1
Location Based Services	GPS, WiFi traffic movement, Bluetooth info beacons
OTA Updates	Yes
Security	AES 128/256-bit encryption
Voltage Detection	Real-time detection of “energized” metal poles
Power Surge Protection	10KV/5KA
Power Supply	90V to 506V (50/60Hz)
Average Power Consumption	1W
IP Ratings	IP66
Impact Rating	IK07
Operating Temperature Range	-30C to +70C
Dimensions	Diameter: 82.5mm (3.25 in) Height: 98mm (3.86 in)
Weight	290 grams
Network Protocol	IPV4 and IPV6 network compliant







Utility Power Metering

Accuracy	ANSI C12.20 Class 0.5
Accuracy Verification	Infrared pulse
Line Voltage	90V to 506V (50/60Hz)
Line Voltage Accuracy	+/- 0.5%
Current Accuracy	+/- 0.5%
Power	Active/reactive/power factor
Energy Consumption	kWh
Sag & Swell Detection	Yes
On/Off Cycles	Cycle count and cycle variation (fault detection)
Running Hour	0-10 years

Programmable Parameters

- Customer device management
- Scheduling controls
- Alert thresholds
- Sunrise/sunset offsets
- Tilt detection
- Vibration detection
- Voltage detection
- Power detection
- Photocell levels
- Luminaire fault detection
- Power loss after power failure
- Network communication failure
- Wireless network configuration

Warranty

5-Year Warranty

10-Year Optional Warranty

ubicquia

APPROVED FOR PUBLIC USE

Copyright © 2020 Ubicquia, Inc. All rights reserved. Patent pending.

POLE AND ARM
SPECIFICATIONS SHEETS

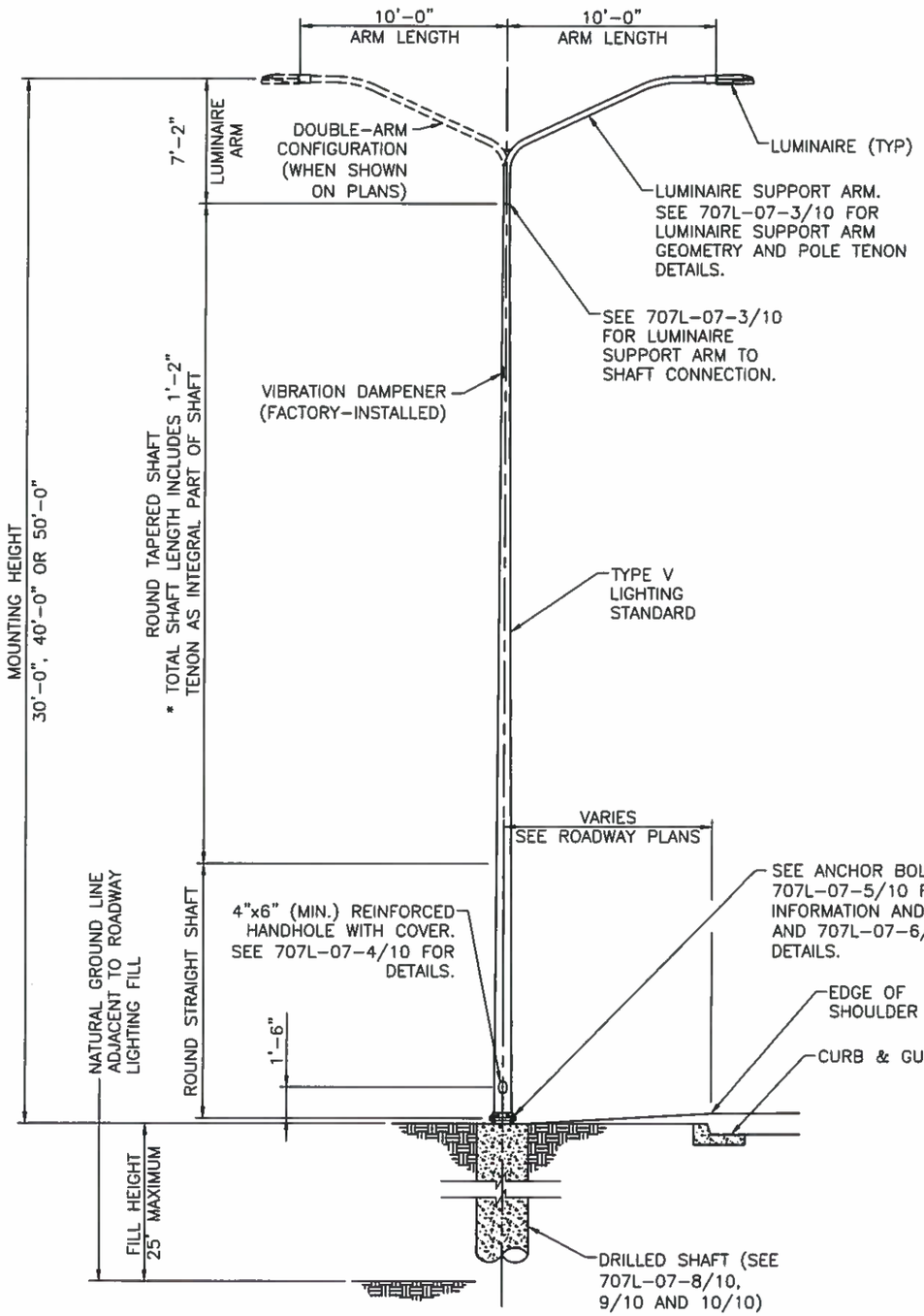

ROADWAY LIGHTING TYPE V POLE ELEVATION

NOT TO SCALE

TABLE OF VARIABLE POLE DIMENSIONS						
MOUNTING HEIGHT	ARM CONFIGURATION	MAX TAPERED SHAFT LENGTH	TOTAL SHAFT LENGTH*	OUTSIDE DIAMETER (IN)		MIN SHAFT SECTION THICKNESS (IN)
				BOTTOM	TOP	
30'-0"	SINGLE	22'-7"	24'-0"	8.00	4.50	0.156
	DOUBLE					0.219
40'-0"	SINGLE	30'-0"	34'-0"	8.00	4.50	0.25
	DOUBLE					0.375
50'-0"	SINGLE	39'-6"	44'-0"	10.00	4.50	0.25
	DOUBLE					0.375

THIS STANDARD DRAWING IS FOR USE ON NMDOT PROJECTS. OTHERS WHO USE THE NMDOT STANDARD DRAWINGS DO SO AT THEIR OWN RISK. STANDARD DRAWINGS THAT ARE APPLICABLE TO A SPECIFIC PROJECT WILL BE IDENTIFIED ON THE PROJECT PLANS BUT WILL NOT BE PHYSICALLY INCLUDED IN THOSE PLANS. THE DESIGNER WHO SPECIFIES A STANDARD DRAWING ACCEPTS THE RESPONSIBILITY OF DETERMINING THEIR APPLICABILITY.

	DATE	BY	DESCRIPTION

REVISIONS (OR CHANGE NOTICES)

JOHN MIGLIACCIO
NEW MEXICO
19258
03/19/18
PROFESSIONAL ENGINEER

NEW MEXICO DEPARTMENT OF TRANSPORTATION STANDARD DRAWING

ROADWAY LIGHTING SUPPORT STRUCTURES TYPE V

POLE ELEVATION AND DIMENSIONS

DESIGNED BY: JAZ DRAWN BY: RJK CHECKED BY: JJM

APPROVED FOR USE ON NMDOT PROJECTS: Kathy Caudell DATE: 3/22/18

707L-07-2/10 2 OF 10

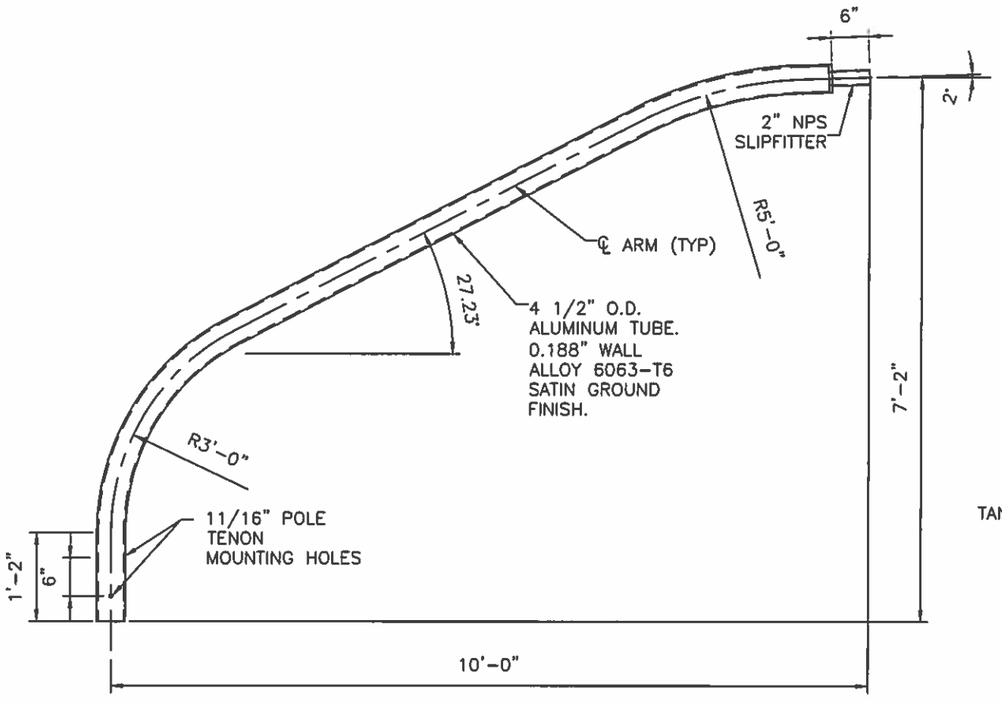

LUMINAIRE SUPPORT ARM GEOMETRY
NOT TO SCALE

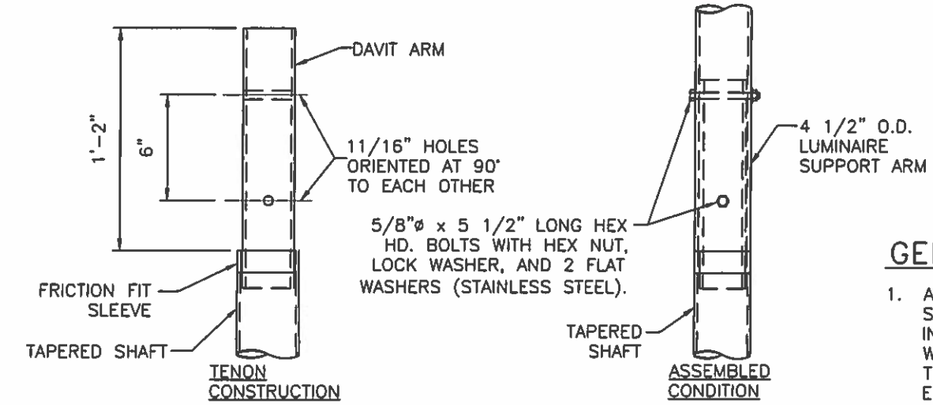

POLE TENON DETAILS
NOT TO SCALE

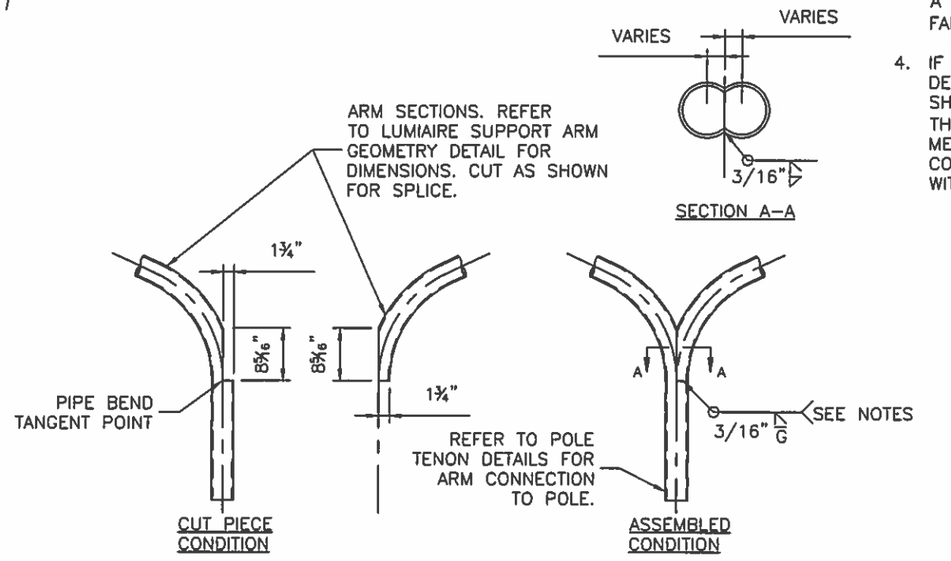

DOUBLE ARM SPLICE DETAILS
NOT TO SCALE

GENERAL NOTES

1. ARM BOTTOM CONNECTIONS AS WELL AS TOP SLIPFITTER CONNECTIONS SHALL BE FREE OF INTERNAL AND EXTERNAL OBSTRUCTIONS WHICH WOULD DAMAGE OR INTERFERE WITH WIRES OR THE PROPER OPERATION OF ANY OTHER ELECTRICAL COMPONENT.
2. ARM MEMBERS MAY TAPER FROM 4 1/2" DIAMETER AT BASE, AT FABRICATOR'S OPTION.
3. HORIZONTAL WELD AT DOUBLE-ARM SPLICE MAY A SQUARE GROOVE WELD WITH BACKING RING, AT FABRICATOR'S OPTION.
4. IF ARM CONNECTION DETAILS OTHER THAN THOSE DEPICTED HEREIN ARE PROPOSED, THE DESIGN SHALL ENSURE THAT THE CONNECTION DEVELOPS THE STRENGTH OF THE 4 1/2" DIAMETER MEMBER. DIMENSIONS OF ALTERNATE CONNECTIONS SHALL BE GENERALLY CONSISTENT WITH THE DIMENSIONS HEREIN.

THIS STANDARD DRAWING IS FOR USE ON NMDOT PROJECTS. OTHERS WHO USE THE NMDOT STANDARD DRAWINGS DO SO AT THEIR OWN RISK. STANDARD DRAWINGS THAT ARE APPLICABLE TO A SPECIFIC PROJECT WILL BE IDENTIFIED ON THE PROJECT PLANS BUT WILL NOT BE PHYSICALLY INCLUDED IN THOSE PLANS. THE DESIGNER WHO SPECIFIES A STANDARD DRAWING ACCEPTS THE RESPONSIBILITY OF DETERMINING THEIR APPLICABILITY.

	DATE	BY	DESCRIPTION

REVISIONS (OR CHANGE NOTICES)

NEW MEXICO
DEPARTMENT OF TRANSPORTATION
STANDARD DRAWING

ROADWAY LIGHTING
SUPPORT STRUCTURES
TYPE V

ARM AND TENON DETAILS

707L-07-3/10 3 of 10

JOSEPH MIGLIACCIO NEW MEXICO 19258 03/19/18 PROFESSIONAL ENGINEER

DESIGNED BY: JAZ DRAWN BY: RJK CHECKED BY: JJM

APPROVED FOR USE ON NMDOT PROJECTS: DATE: 3/22/18

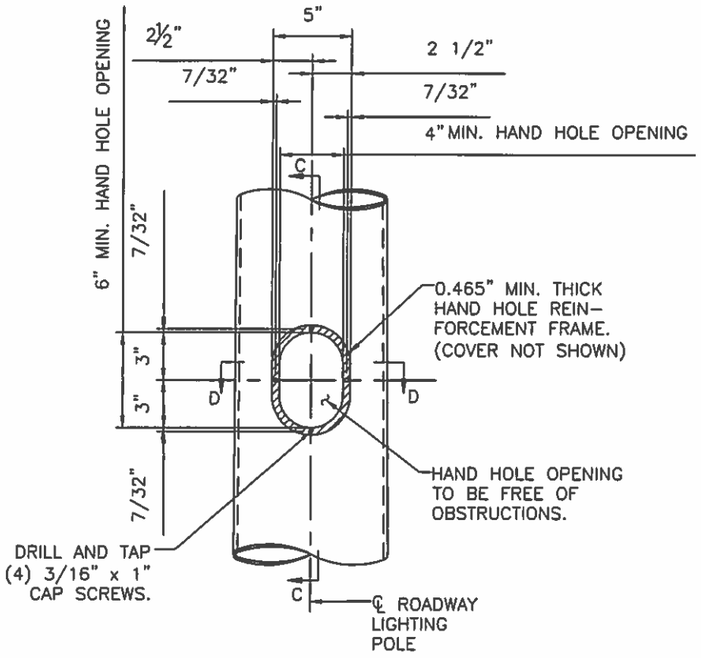

HAND HOLE DETAIL
NOT TO SCALE

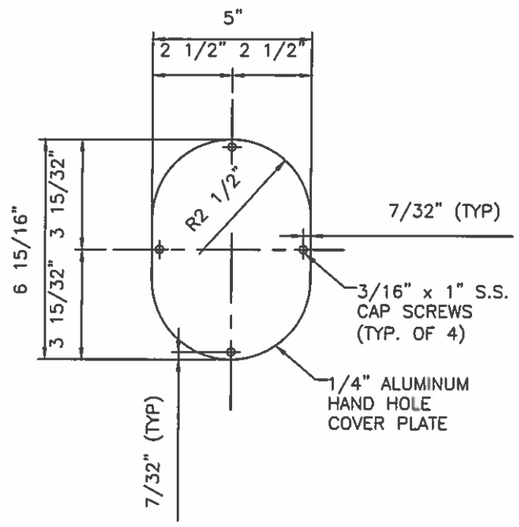

HAND HOLE COVER
NOT TO SCALE

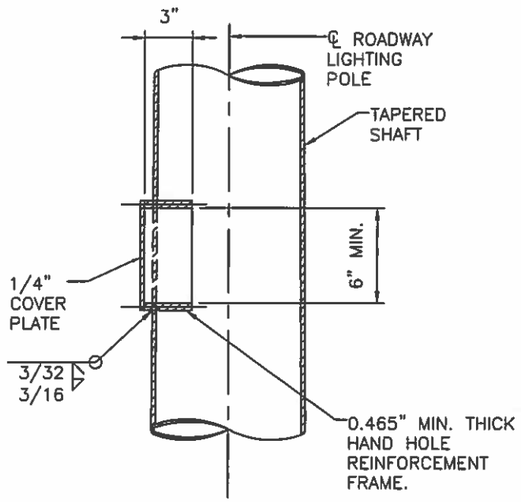

SECTION C–C
NOT TO SCALE

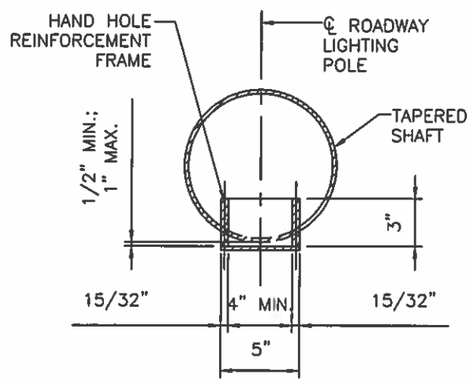

SECTION D–D
NOT TO SCALE

GENERAL NOTES

1. HANDHOLES SHALL BE FREE OF INTERNAL AND EXTERNAL OBSTRUCTIONS WHICH WOULD DAMAGE OR INTERFERE WITH WIRES OR THE PROPER OPERATION OF ANY OTHER ELECTRICAL COMPONENT.
2. HAND HOLE COVER SHALL BE FABRICATED FROM 1/4", ALLOY 6063–T6 PLATE OR MAY BE HINGED WITH A SUITABLE METHOD OF CLOSURE AS APPROVED BY THE PROJECT MANAGER.
3. HAND HOLE REINFORCEMENT FRAME SHALL BE FABRICATED FROM 15/32" (MIN) WALL TUBING, CAST ALLOY 356–T6.
4. COORDINATE LOCATIONS OF HOLES FOR CAP SCREWS IN HAND HOLE COVER PLATES WITH CONSTRUCTION OF HAND HOLE REINFORCING FRAME. TAPPED HOLES SHALL BE CENTERED IN REINFORCING FRAME RING.
5. HAND HOLES SHALL BE ORIENTED DOWNSTREAM OF ONCOMING TRAFFIC.
6. IF HAND HOLE FABRICATION DETAILS OTHER THAN THOSE DEPICTED HEREIN ARE PROPOSED, THE DESIGN SHALL ENSURE THAT SUCH HAND HOLE REINFORCEMENT SHALL STRENGTHEN POLE SHAFT SECTION TO THAT OF A SHAFT FABRICATED WITHOUT A HANDHOLE. DIMENSIONS OF ALTERNATE HAND HOLES FABRICATIONS SHALL BE GENERALLY CONSISTENT WITH THE DIMENSIONS HEREIN.

THIS STANDARD DRAWING IS FOR USE ON NMDOT PROJECTS. OTHERS WHO USE THE NMDOT STANDARD DRAWINGS DO SO AT THEIR OWN RISK. STANDARD DRAWINGS THAT ARE APPLICABLE TO A SPECIFIC PROJECT WILL BE IDENTIFIED ON THE PROJECT PLANS BUT WILL NOT BE PHYSICALLY INCLUDED IN THOSE PLANS. THE DESIGNER WHO SPECIFIES A STANDARD DRAWING ACCEPTS THE RESPONSIBILITY OF DETERMINING THEIR APPLICABILITY.

	DATE	BY	DESCRIPTION

REVISIONS (OR CHANGE NOTICES)

NEW MEXICO
DEPARTMENT OF TRANSPORTATION
STANDARD DRAWING

ROADWAY LIGHTING
SUPPORT STRUCTURES
TYPE V

HAND HOLE DETAILS

707L–07–4/10 4 of 10

JOHN MIGLIACCIO — NEW MEXICO — 19258 — 03/19/18 — PROFESSIONAL ENGINEER

DESIGNED BY: JAZ DRAWN BY: RJK CHECKED BY: JJM

APPROVED FOR USE ON NMDOT PROJECTS: DATE: 3/22/18

ANCHOR BOLT TABLE

MOUNTING HEIGHT	BOLT DIAMETER	NUMBER OF BOLTS	SLOTTED HOLE SIZE	BOLT CIRCLE DIAMETER	BOLT TEMPLATE		BASE PLATE OPENING	BASE PLATE	
								WIDTH	THICKNESS
				"B"	O.D.	I.D.	"A"	"C"	"D"
(FT)	(IN)		(IN x IN)	(IN)	(IN)	(IN)	(IN)	(IN)	(IN)
50	1.0	4	1.25 x 2.25	15.0	18.0	12.0	7.0	16.0	1.0
40	1.0	4	1.25 x 2.25	11.5	14.5	8.5	6.0	14.0	1.0
30	1.0	4	1.25 x 2.25	11.5	14.5	8.5	5.0	14.0	1.0

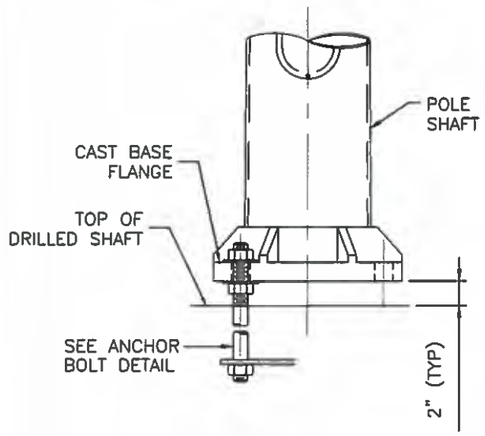

POLE BASE ELEVATION
NOT TO SCALE

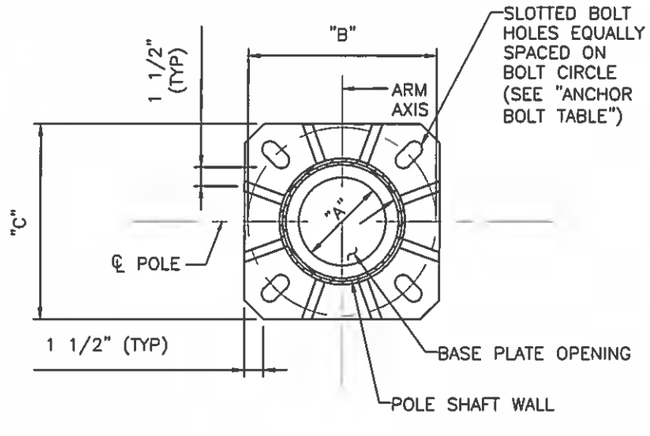

POLE BASE PLAN
NOT TO SCALE

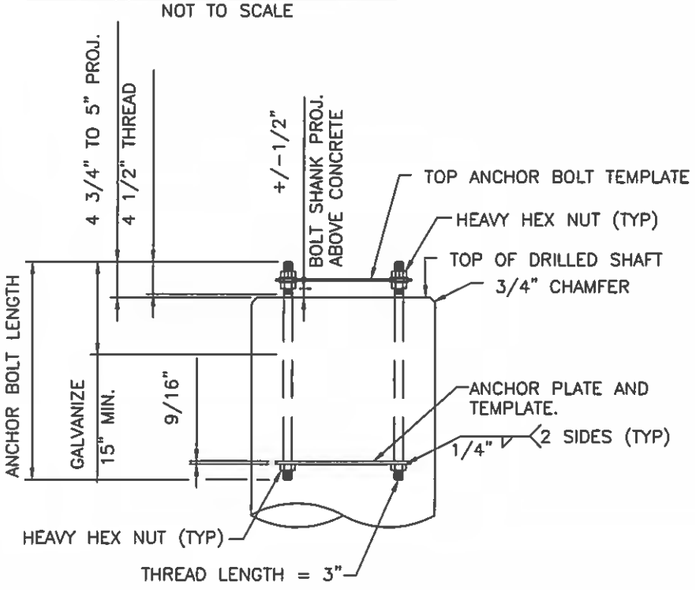

ANCHOR BOLT ASSEMBLY
NOT TO SCALE
(SEE ANCHOR BOLT TABLE)

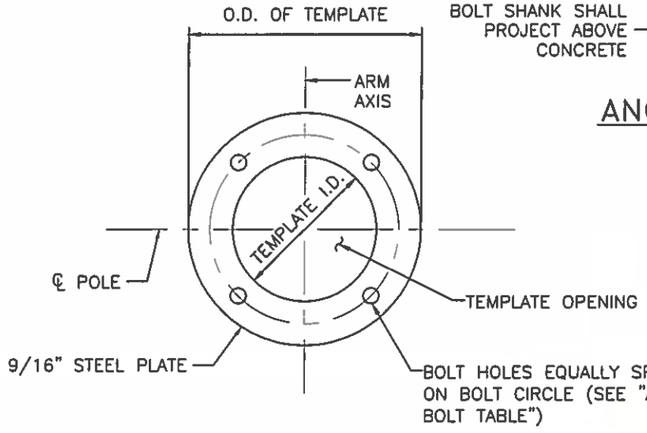

ANCHOR BOLT AND ANCHOR PLATE TEMPLATE
NOT TO SCALE

BASE WELD TABLE

MOUNTING HEIGHT	WELD SIZE (SINGLE ARM)	WELD SIZE (DOUBLE ARM)
(FT)	(IN)	(IN)
50	5/16	3/8
40	5/16	3/8
30	1/4	1/4

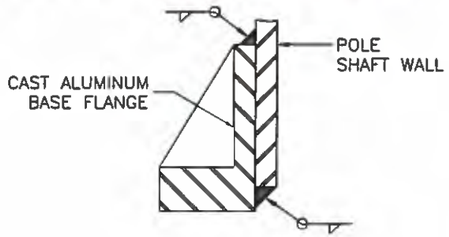

BASE WELD DETAIL
NOT TO SCALE

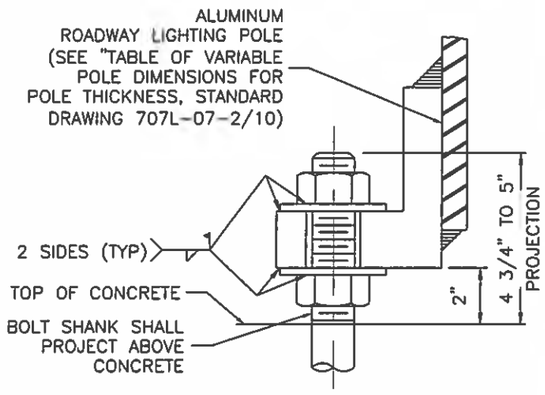

ANCHOR BOLT DETAIL
NOT TO SCALE

GENERAL NOTES

1. REFER TO STANDARD DRAWING 707L-07-6/10 FOR BREAKAWAY POLE BASE SYSTEM DETAILS AND REQUIREMENTS.
2. INSTALL DIRECT-MOUNT BASE ONLY WHEN SPECIFIED. REFER TO PLANS FOR DIRECT-MOUNT OR BREAKAWAY BASE REQUIREMENT.
3. ALUMINUM BASE FLANGE SHALL BE CAST FROM ALUMINUM ALLOY 356 T6, CONFORMING TO ASTM B 108. BASE FLANGE SHALL ACCOMMODATE FOUR ANCHOR BOLTS AS SHOWN, AND SHALL BE CAPABLE OF DEVELOPING THE FULL MOMENT, SHEAR, AND TORSIONAL STRENGTHS OF THE ALUMINUM POLE SHAFTS. BASE FLANGE SHALL ACCOMMODATE POLE SHAFT OUTSIDE DIAMETER, OR POLE SHAFT DIAMETER MAY BE INCREASED TO BE COMPATIBLE WITH BASE FLANGE.
4. ANCHOR BOLTS AND BOLT CIRCLE DIMENSIONS FOR THE ALUMINUM POLE SHALL ACCOMMODATE THE PROVIDED CAST BASE FLANGE. ANCHOR BOLT SIZES SHOWN SHALL BE CONSIDERED A MINIMUM.
5. ANCHOR BOLT PROJECTION LENGTHS AND TOTAL LENGTHS SHOWN IN STANDARD DRAWINGS 707L-07-9/10 AND 10/10 APPLY TO DIRECT-MOUNT BASE CONDITION. ADJUST ACCORDINGLY FOR BREAKAWAY BASE CONDITION.
6. WHEN BREAKAWAY COUPLINGS ARE SPECIFIED, THREAD UNC OF ANCHOR BOLTS SHALL MATCH THAT OF THE COUPLINGS.

THIS STANDARD DRAWING IS FOR USE ON NMDOT PROJECTS. OTHERS WHO USE THE NMDOT STANDARD DRAWINGS DO SO AT THEIR OWN RISK. STANDARD DRAWINGS THAT ARE APPLICABLE TO A SPECIFIC PROJECT WILL BE IDENTIFIED ON THE PROJECT PLANS BUT WILL NOT BE PHYSICALLY INCLUDED IN THOSE PLANS. THE DESIGNER WHO SPECIFIES A STANDARD DRAWING ACCEPTS THE RESPONSIBILITY OF DETERMINING THEIR APPLICABILITY.

	DATE	BY	DESCRIPTION

REVISIONS (OR CHANGE NOTICES)

NEW MEXICO
DEPARTMENT OF TRANSPORTATION
STANDARD DRAWING

ROADWAY LIGHTING
SUPPORT STRUCTURES
TYPE V

BASE PLATE & ANCHOR BOLT DETAILS

707L-07-5/10 5 of 10

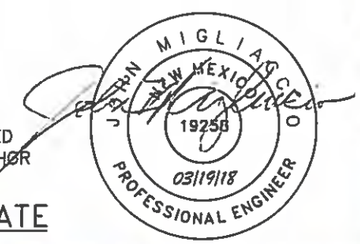

DESIGNED BY: JAZ DRAWN BY: RJK CHECKED BY: JJM

APPROVED FOR USE ON NMDOT PROJECTS: DATE: 3/22/18

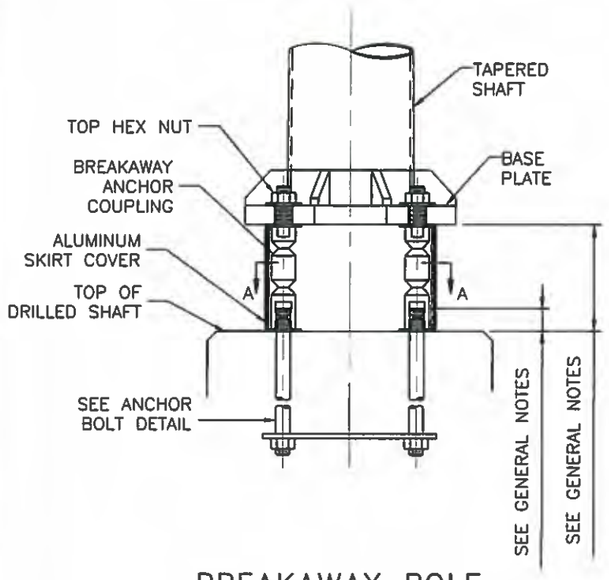

BREAKAWAY POLE BASE ELEVATION

NOT TO SCALE

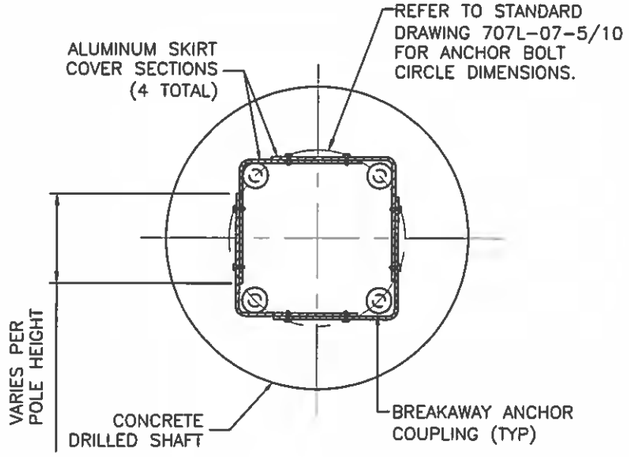

SECTION A-A: BREAKAWAY BASE SECTION

NOT TO SCALE

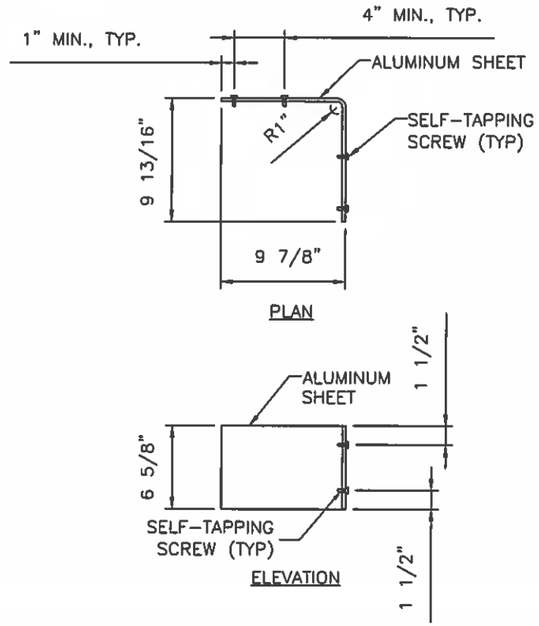

SKIRT COVER DIMENSIONS

NOT TO SCALE

GENERAL NOTES

1. REFER TO STANDARD DRAWING 707L-07-5/10 FOR BASE PLATE AND ADDITIONAL ANCHOR BOLT DETAILS AND REQUIREMENTS.
2. SKIRT COVER SHALL BE FABRICATED FROM 1/16" SHEET ALUMINUM ALLOY 3003H14.
3. WHEN BREAKAWAY BASES ARE SPECIFIED, EACH LIGHT POLE SHALL BE FURNISHED WITH FOUR (4) SKIRT COVER SECTIONS AND SIXTEEN (16) SCREWS.
4. THE INTENDED USE OF THE SKIRT COVER IS TO ENCLOSE THE VOID UNDER POLES WITH BREAKAWAY SUPPORT COUPLINGS.
5. SCREWS SHALL BE SELF-TAPPING #10 x 5/8" STAINLESS STEEL.
6. BREAKAWAY SUPPORT COUPLINGS SHALL MEET THE REQUIREMENTS IN NCHRP REPORT 350, AND THE REQUIREMENTS IN 2015 (1st EDITION) AASHTO LRFD SPECIFICATIONS FOR STRUCTURAL SUPPORTS FOR HIGHWAY SIGNS, LUMINAIRES AND TRAFFIC SIGNALS, SECTION 12.
7. WHEN BREAKAWAY BASES ARE SPECIFIED, EACH LIGHT POLE SHALL BE FURNISHED WITH FOUR (4) COUPLING SYSTEMS, COMPLETE WITH COUPLINGS, THREADED STUDS, WASHERS, NUTS, AND SHIMS.
8. BREAKAWAY ASSEMBLY DIMENSIONS VARY PER MANUFACTURER. INSTALL ANCHOR BOLT PROJECTIONS AND BASE PLATE OFFSETS IN ACCORDANCE WITH SPECIFIC BREAKAWAY ASSEMBLY MANUFACTURER'S SPECIFICATIONS.
9. ALTERNATE DESIGNS OF BREAKAWAY ASSEMBLIES MAY BE APPROVED BY THE PROJECT MANAGER, PROVIDED THEY MEET THE REQUIREMENTS HEREIN. WHEN ALTERNATE BREAKAWAY SYSTEMS ARE UTILIZED, IT SHALL BE THE THE CONTRACTOR'S RESPONSIBILITY TO PROVIDE COMPATIBLE SKIRT COVERS, AND MAKE NECESSARY ADJUSTMENTS TO ANCHOR BOLT PROJECTIONS.
10. CERTIFICATION OF BOTH BREAKAWAY AND STRUCTURAL ADEQUACY, DESIGN CALCULATIONS AND/OR TEST DATA OF PRODUCTION SAMPLES TO SUPPORT CERTIFICATION SHALL BE PROVIDED FOR BREAKAWAY SYSTEMS.

THIS STANDARD DRAWING IS FOR USE ON NMDOT PROJECTS. OTHERS WHO USE THE NMDOT STANDARD DRAWINGS DO SO AT THEIR OWN RISK. STANDARD DRAWINGS THAT ARE APPLICABLE TO A SPECIFIC PROJECT WILL BE IDENTIFIED ON THE PROJECT PLANS BUT WILL NOT BE PHYSICALLY INCLUDED IN THOSE PLANS. THE DESIGNER WHO SPECIFIES A STANDARD DRAWING ACCEPTS THE RESPONSIBILITY OF DETERMINING THEIR APPLICABILITY.

	DATE	BY	DESCRIPTION

REVISIONS (OR CHANGE NOTICES)

NEW MEXICO
DEPARTMENT OF TRANSPORTATION
STANDARD DRAWING

ROADWAY LIGHTING
SUPPORT STRUCTURES
TYPE V

BREAKAWAY BASE DETAILS

707L-07-6/10 6 of 10

JOHN MIGLIACCIO — NEW MEXICO — 19258 — 03/19/18 — PROFESSIONAL ENGINEER

DESIGNED BY: JAZ DRAWN BY: RJK CHECKED BY: JJM

APPROVED FOR USE ON NMDOT PROJECTS: DATE: 3/22/18

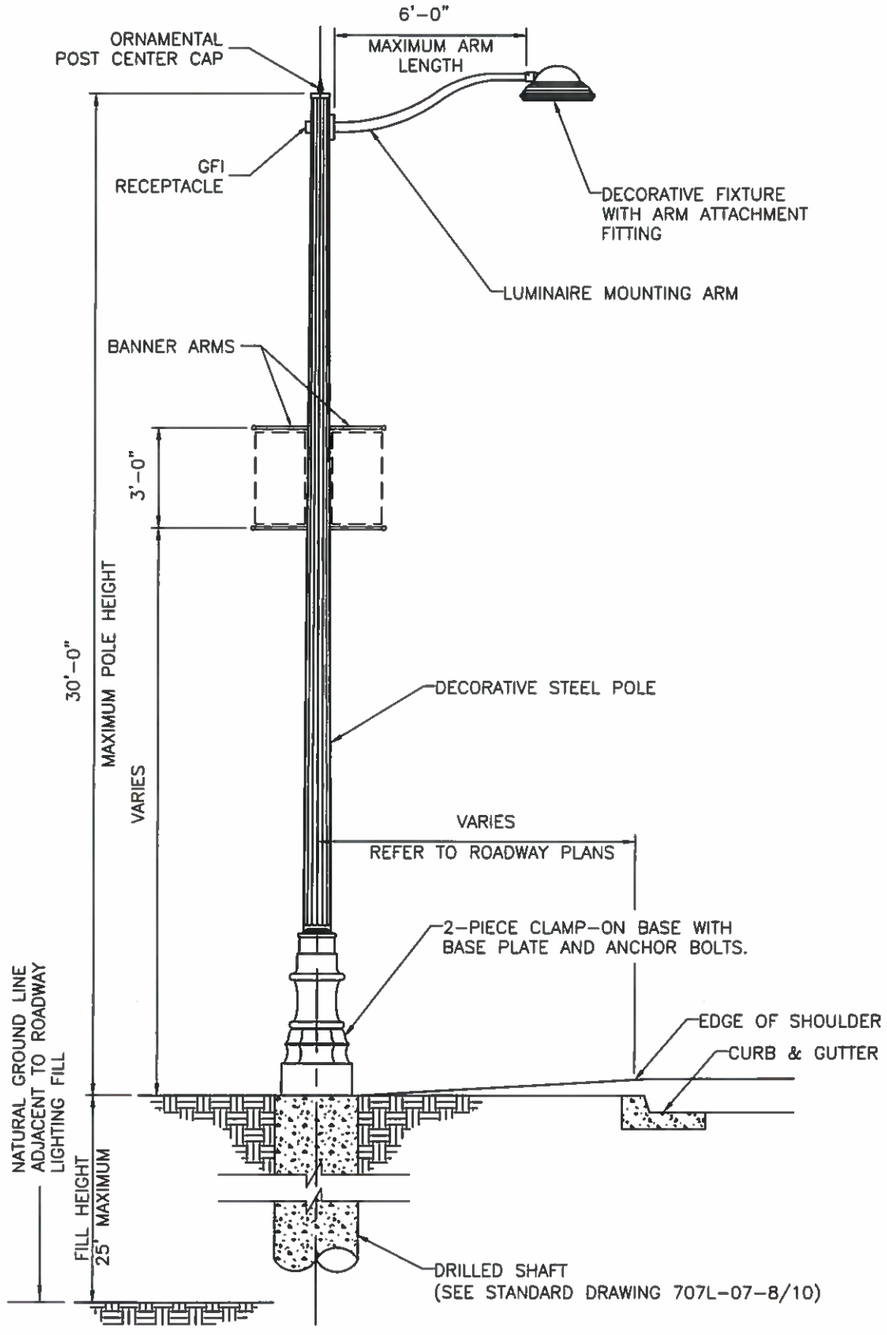

30' DECORATIVE ROADWAY LIGHTING OPTION ELEVATION

NOT TO SCALE

GENERAL NOTES

1. REFER TO STANDARD DRAWING 707L-07-1/10 FOR GENERAL DESIGN CRITERIA, WORKMANSHIP REQUIREMENTS, AND SUBMITTAL REQUIREMENTS.

2. SHOP DRAWINGS FOR ORNAMENTAL LIGHT ASSEMBLIES SHALL BE PROVIDED TO THE NMDOT PROJECT MANAGER FOR APPROVAL, PRIOR TO FABRICATION AND CONSTRUCTION. SHOP DRAWINGS SHALL DEPICT ALL FEATURES AND OPTIONS CALLED FOR IN THE CONTRACT DOCUMENTS INCLUDING, BUT NOT LIMITED TO:

   A. POLE MODEL
   B. POLE HEIGHT
   C. POLE SHAFT MATERIAL
   D. POLE SHAFT STYLE
   E. POST CAP STYLE
   F. ARM MODEL
   G. ARM LENGTH
   H. ARM MATERIAL
   I. ARM STYLE
   J. LUMINAIRE FIXTURE MODEL
   K. LUMINAIRE FITTING MOUNT METHOD
   L. WATTAGE
   M. LIGHT SOURCE TYPE
   N. VOLTAGE
   O. LUMINAIRE LENS TYPE
   P. OPTICS TYPE
   Q. DECORATIVE BASE STYLE
   R. ACCESS DOOR LOCATION AND SIZE
   S. BASE PLATE
   T. ANCHOR BOLTS
   U. FOUNDATION LOADINGS
   V. GROUND FAULT INTERRUPTER LOCATION
   W. BANNER ARM LOCATIONS
   X. FINISHES

3. FOR ALL STRUCTURAL COMPONENTS PROVIDED BY THE ORNAMENTAL LIGHTING MANUFACTURER, CERTIFICATION OF STRUCTURAL ADEQUACY AND DESIGN CALCULATIONS TO SUPPORT CERTIFICATION SHALL BE PROVIDED.

4. THE POLE AND BASE ASSEMBLY SHALL BE PROVIDED WITH ONE ACCESS DOOR FOR WIRING AND MECHANICALLY SECURED WITH TWO, TAMPER-PROOF STAINLESS STEEL SCREWS OR OTHER APPROVED METHOD. ACCESS DOOR SHALL BE LOCATED OPPOSITE FROM THE STREET-FACING SIDE OF THE POLE.

5. THE 30' DECORATIVE ROADWAY LIGHTING OPTION ELEVATION SHOWN ON THIS STANDARD DRAWING IS A SCHEMATIC REPRESENTATION OF POSSIBLE FEATURES IN THE ASSEMBLY. ACTUAL OPTIONS, FEATURES, AND COMPONENTS SHALL BE SELECTED BY NMDOT ON A PROJECT BASIS AND WILL BE SPECIFIED IN THE ROADWAY PLANS.

THIS STANDARD DRAWING IS FOR USE ON NMDOT PROJECTS. OTHERS WHO USE THE NMDOT STANDARD DRAWINGS DO SO AT THEIR OWN RISK. STANDARD DRAWINGS THAT ARE APPLICABLE TO A SPECIFIC PROJECT WILL BE IDENTIFIED ON THE PROJECT PLANS BUT WILL NOT BE PHYSICALLY INCLUDED IN THOSE PLANS. THE DESIGNER WHO SPECIFIES A STANDARD DRAWING ACCEPTS THE RESPONSIBILITY OF DETERMINING THEIR APPLICABILITY.

	DATE	BY	DESCRIPTION

REVISIONS (OR CHANGE NOTICES)

JOHN MIGLIACCIO
NEW MEXICO
19258
03/19/18
PROFESSIONAL ENGINEER

NEW MEXICO
DEPARTMENT OF TRANSPORTATION
STANDARD DRAWING

ROADWAY LIGHTING
SUPPORT STRUCTURES
TYPE V

DECORATIVE LIGHTING DETAILS

DESIGNED BY: JAZ DRAWN BY: RJK CHECKED BY: JJM

APPROVED FOR USE ON NMDOT PROJECTS: Kathy Ward DATE: 3/22/18

707L-07-7/10 7 of 10

FOUNDATION NOTES:

1. DRILLED SHAFT FOUNDATIONS SHALL CONFORM TO SECTION 502 AND SPREAD FOOTING FOUNDATIONS SHALL CONFORM TO SECTION 511 OF THE LATEST EDITION OF THE NEW MEXICO STANDARD SPECIFICATIONS FOR HIGHWAY AND BRIDGE CONSTRUCTION. FOUNDATIONS SHALL BE COMPLETED AT LEAST 7 DAYS BEFORE ERECTING LIGHTING STRUCTURES ON THE FOUNDATIONS.

2. ALUMINUM ROADWAY LIGHTING SUPPORT STRUCTURES TYPE V FOR THE 30 FT, 40 FT, AND 50 FT CASES, AND ASSOCIATED FOUNDATIONS, ARE DESIGNED TO CONFORM TO 2015 (1ST EDITION) AASHTO STANDARD SPECIFICATIONS FOR STRUCTURAL SUPPORTS FOR HIGHWAY SIGNS, LUMINAIRES AND TRAFFIC SIGNALS. STEEL DECORATIVE (ORNAMENTAL) LIGHTING, AND ASSOCIATED FOUNDATIONS, IS DESIGNED TO CONFORM TO 2009 (5TH EDITION) AASHTO STANDARD SPECIFICATIONS FOR STRUCTURAL SUPPORTS FOR HIGHWAY SIGNS, LUMINAIRES AND TRAFFIC SIGNALS.

3. ALL CONCRETE FOR DRILLED SHAFT FOUNDATIONS SHALL BE CLASS G, f'c = 3000 PSI. ALL CONCRETE FOR SPREAD FOOTING FOUNDATIONS SHALL BE CLASS A, f'c = 3000 PSI. CONCRETE SHALL CONFORM TO SECTION 510 – PORTLAND CEMENT CONCRETE. ALL EXPOSED EDGES OF CONCRETE SHALL BE CHAMFERED ¾" UNLESS OTHERWISE NOTED.

4. REINFORCING STEEL (REBAR) SHALL CONFORM TO SECTION 540 – STEEL REINFORCEMENT AASHTO M 31 (ASTM A615), GRADE 60. DIMENSIONS REFER TO THE CENTERLINE OF THE BAR. ALL REINFORCING STEEL SHALL BE NON–EPOXY UNLESS OTHERWISE NOTED.

5. ANCHOR BOLTS SHALL CONFORM TO AASHTO M 314 (ASTM F1554 GRADE 55). PROVIDE A HEX NUT, LEVELING NUT AND 2 WASHERS TOP AND BOTTOM OF EACH BOLT. ANCHOR BOLTS SHALL BE CONSIDERED INCIDENTAL TO THE FOUNDATIONS.

6. PROVIDE BOLT TEMPLATE FOR CAST–IN–PLACE INSTALLATION OF ANCHOR BOLTS. COORDINATE TEMPLATE REQUIREMENTS WITH BOLT CIRCLE DIAMETER, BOLT DIAMETER, AND DRILLED SHAFT DIAMETER FOR PLACEMENT AND FIT. TAKE PROPER CARE TO ALIGN FOUNDATION BOLT PATTERN WITH THE BASE PLATE PATTERN THAT RESULTS IN CORRECT CENTERLINE ALIGNMENT OF SUPPORT STRUCTURE WITH BOLT PATTERN.

7. PRIOR TO ERECTION OF POSTS, EXCAVATION CREATED FOR FOUNDATION CONSTRUCTION SHALL BE BACKFILLED IN ACCORDANCE WITH SECTION 210 OF THE LATEST EDITION OF THE NEW MEXICO STANDARD SPECIFICATIONS FOR HIGHWAY AND BRIDGE CONSTRUCTION WITH MATERIAL EQUIVALENT TO THE SURROUNDING SOIL. FOUNDATION CONCRETE SHALL HAVE REACHED A MINIMUM STRENGTH OF 2200 PSI PRIOR TO BACKFILLING. BACKFILL SHALL BE CONSIDERED INCIDENTAL TO CONSTRUCTION.

8. FOUNDATION DESIGN IS FOR THE ROADWAY LIGHTING SUPPORT STRUCTURES STANDARD DIAMETERS. IF A LARGER DIAMETER IS FURNISHED, THE CONTRACTOR SHALL BUILD A LARGER FOUNDATION AS DETERMINED NECESSARY BY THE PROJECT MANAGER AND NO ADDITIONAL PAYMENT OR COMPENSATION SHALL BE MADE.

9. DRILLED SHAFT DESIGN CONSIDERED PARAMETERS FOR COHESIVE AND NON–COHESIVE SOILS AS WELL AS ROCK. SHOULD SITE OR SOIL CONDITIONS POSE UNIQUE CHALLENGES, CONSULT WITH THE STATE GEOTECHNICAL ENGINEER FOR ANY REMEDIAL MEASURES BEFORE PLACEMENT OF THE FOUNDATION.

10. DRILLED SHAFT FOUNDATION DEPTH MUST BE INCREASED IF INSTALLED ON OR NEAR (WITHIN A SHAFT DIAMETER OF) A GROUND SLOPE. IF GROUND SLOPES MINIMALLY DOWN NO MORE THAN 2 FEET AND THEN BACK UP WITHIN ½ FOUNDATION DEPTH, AS IN A DRAINAGE DITCH, TREAT AS IF LEVEL. SEE FOUNDATION DETAIL FOR SLOPING GROUND, THIS SHEET.

11. FINISHED GRADE FOR ALL FOUNDATIONS SHALL BE PER THE CONTRACT DOCUMENTS. THE TOP OF STANDARD FOUNDATIONS SHALL BE FLUSH WITH ADJACENT SIDEWALK OR PAVED AREAS WHEN PRESENT AND SHALL CONFORM TO THE AMERICANS WITH DISABILITIES ACT.

12. FOR BASE PLATE AND ANCHOR BOLT DETAILS, SEE 707L–07–5/10.

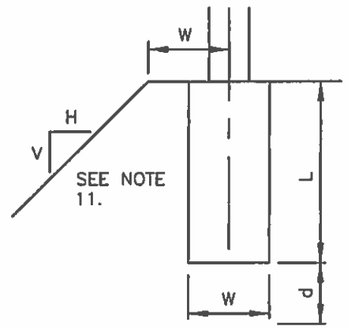

SLOPE	d
3H:1V	0
2H:1V	0.5W
1.5H:1V	1.0W

d = INCREASE IN FOUNDATION DEPTH AND REBAR LENGTH DUE TO SLOPE

FOUNDATION DETAIL FOR SLOPING GROUND



THIS STANDARD DRAWING IS FOR USE ON NMDOT PROJECTS. OTHERS WHO USE THE NMDOT STANDARD DRAWINGS DO SO AT THEIR OWN RISK. STANDARD DRAWINGS THAT ARE APPLICABLE TO A SPECIFIC PROJECT WILL BE IDENTIFIED ON THE PROJECT PLANS BUT WILL NOT BE PHYSICALLY INCLUDED IN THOSE PLANS. THE DESIGNER WHO SPECIFIES A STANDARD DRAWING ACCEPTS THE RESPONSIBILITY OF DETERMINING THEIR APPLICABILITY.

NO.	DATE	BY	DESCRIPTION

REVISIONS (OR CHANGE NOTICES)

NEW MEXICO DEPARTMENT OF TRANSPORTATION STANDARD DRAWING

ROADWAY LIGHTING SUPPORT STRUCTURES TYPE V

FOUNDATION GENERAL NOTES

DESIGNED BY: ADA DRAWN BY: DLH CHECKED BY: NJB

APPROVED FOR USE ON NMDOT PROJECTS: DATE: 11/17/17

707L–07–8/10 8 of 10

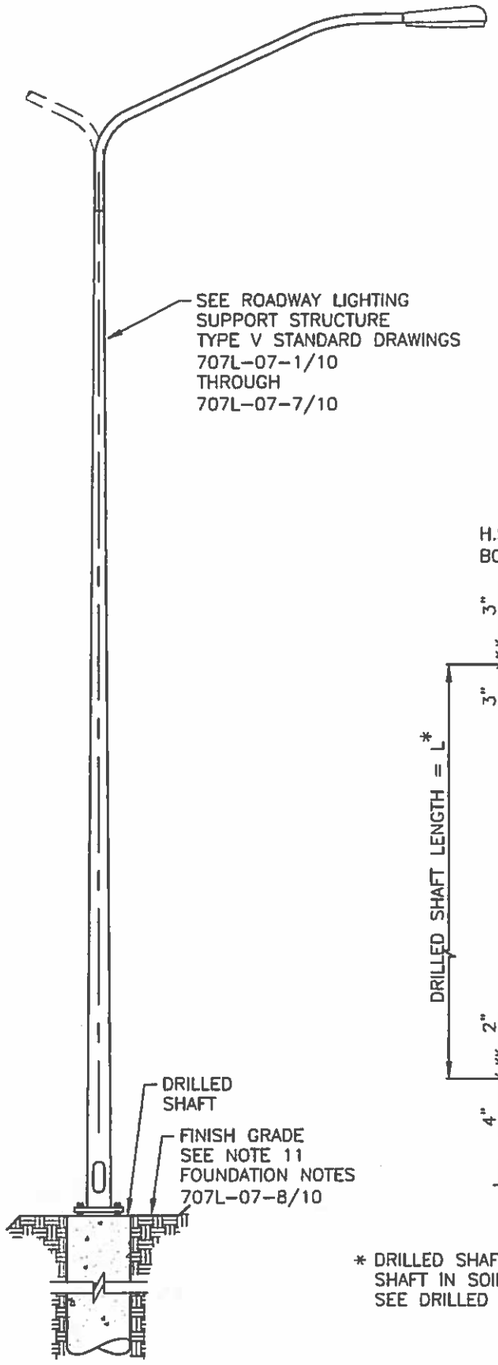

ROADWAY LIGHTING
POLE ELEVATION
NOT TO SCALE

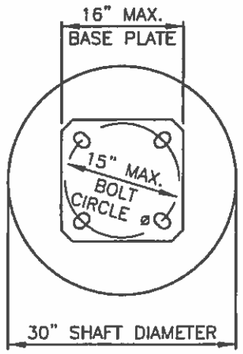

SECTION A–A
NOT TO SCALE

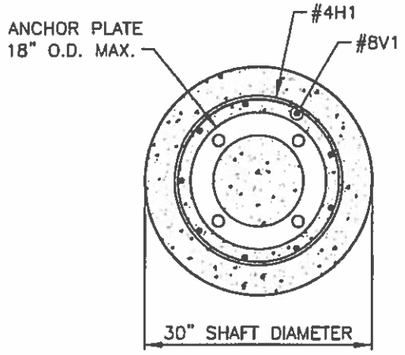

SECTION B–B
NOT TO SCALE

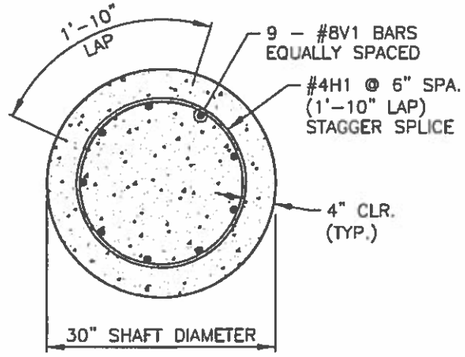

SECTION C–C
NOT TO SCALE

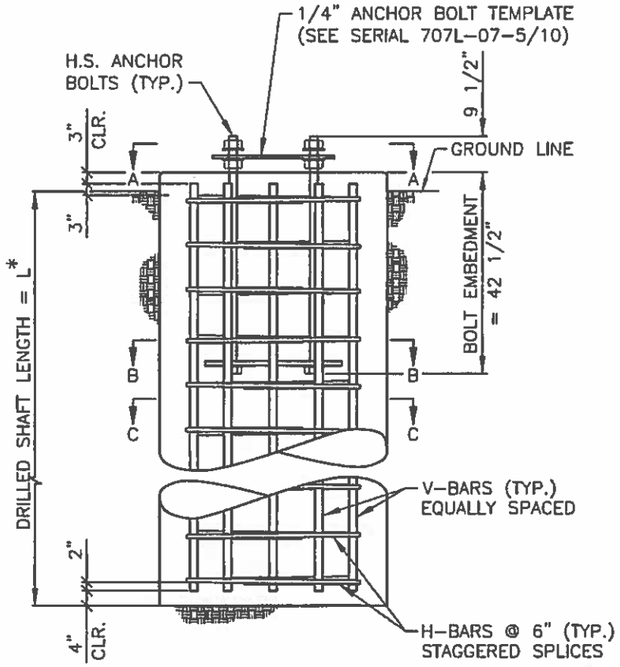

FOUNDATION ELEVATION
NOT TO SCALE

* DRILLED SHAFT LENGTH IS MEASURED AS LENGTH OF SHAFT IN SOIL OR ROCK AS APPLICABLE. SEE DRILLED SHAFT LENGTHS TABLE FOR LENGTH.

DRILLED SHAFT LENGTHS

SEE NOTE 9 FOUNDATION NOTES 707-07-8/10

POLE HEIGHT (ft)	DRILLED SHAFT LENGTH (ft)
50	8.5
30 ORNAMENTAL	7.0
40	7.5
30	6.0

ANCHOR BOLTS

POLE HEIGHT (ft)	POLE DIAMETER O.D. (in)	BOLT DIAMETER (in)	BOLT LENGTH (in)	NUMBER OF BOLTS	BOLT CIRCLE DIAMETER (in)
50	10	1.000	52	4	15
40	9	1.000	52	4	11.5
30	8	1.000	52	4	11.5

REINFORCING SCHEDULE

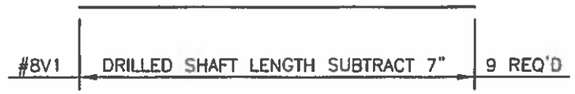

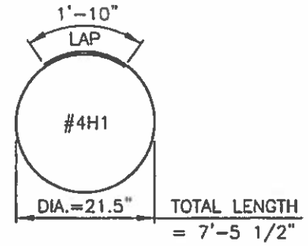

THIS STANDARD DRAWING IS FOR USE ON NMDOT PROJECTS. OTHERS WHO USE THE NMDOT STANDARD DRAWINGS DO SO AT THEIR OWN RISK. STANDARD DRAWINGS THAT ARE APPLICABLE TO A SPECIFIC PROJECT WILL BE IDENTIFIED ON THE PROJECT PLANS BUT WILL NOT BE PHYSICALLY INCLUDED IN THOSE PLANS. THE DESIGNER WHO SPECIFIES A STANDARD DRAWING ACCEPTS THE RESPONSIBILITY OF DETERMINING THEIR APPLICABILITY.

NO.	DATE	BY	DESCRIPTION

REVISIONS (OR CHANGE NOTICES)



NEW MEXICO DEPARTMENT OF TRANSPORTATION STANDARD DRAWING

ROADWAY LIGHTING
SUPPORT STRUCTURES
TYPE V

DRILLED SHAFT DETAILS

DESIGNED BY: ADA DRAWN BY: DLH CHECKED BY: NJB

APPROVED FOR USE ON NMDOT PROJECTS: Kathy Conrad DATE: 11/17/17

707L-07-9/10 9 of 10

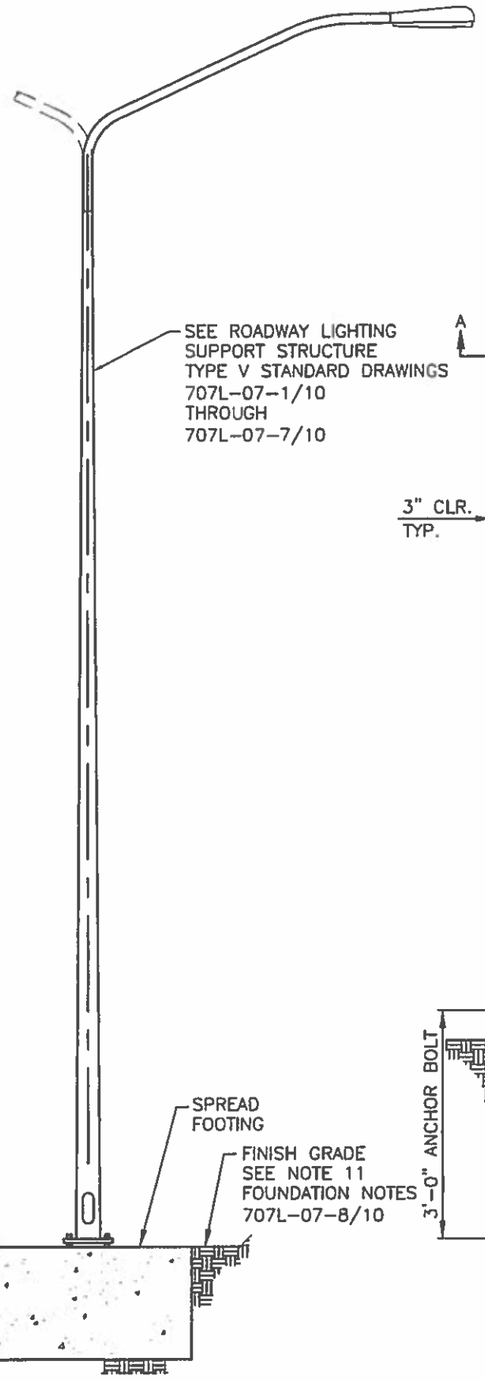

ROADWAY LIGHTING
POLE ELEVATION
NOT TO SCALE

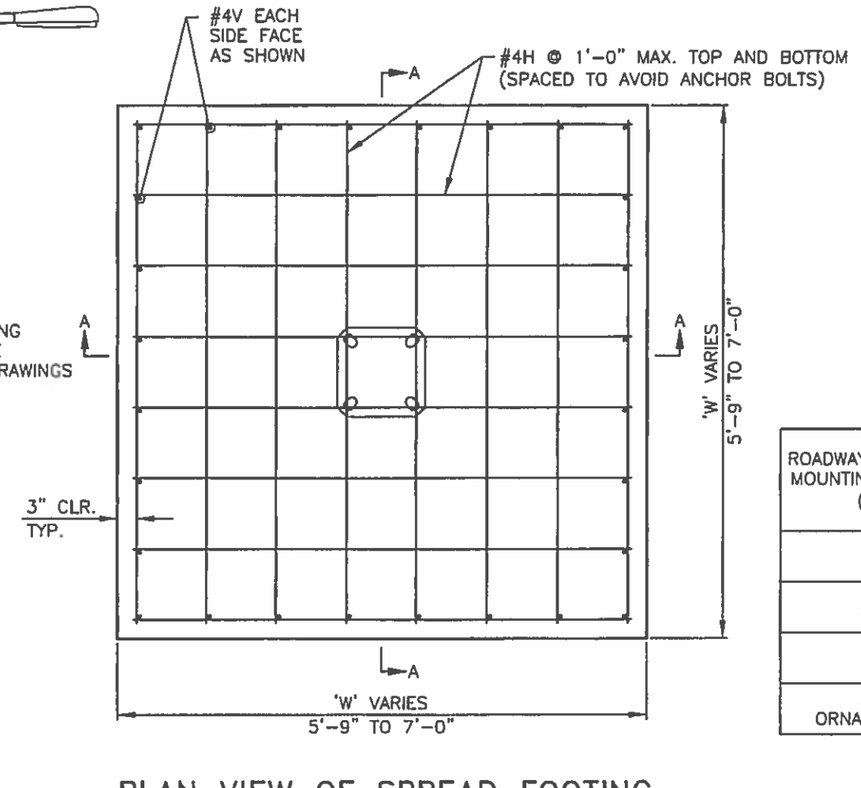

PLAN VIEW OF SPREAD FOOTING
NOT TO SCALE

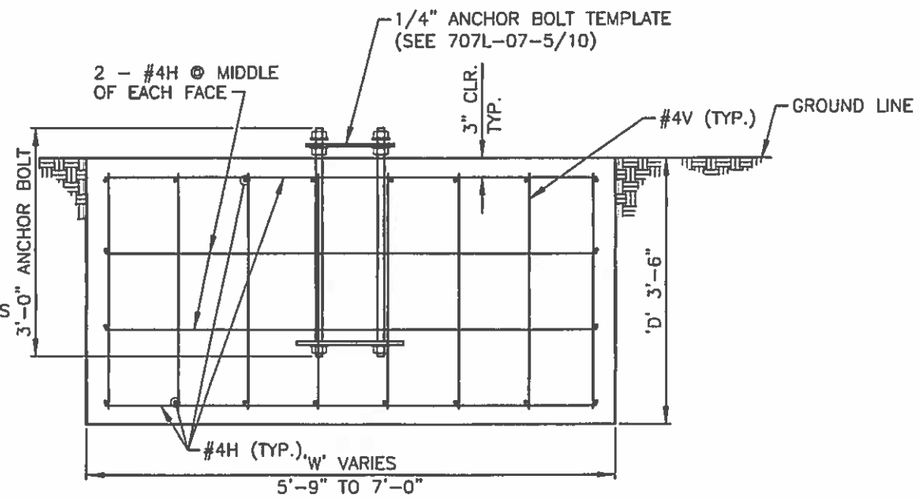

SECTION A-A
NOT TO SCALE

DESIGN DATA:

DESIGN STRENGTH:

CONCRETE: fc' = 3000 PSI @ 28 DAYS = NMDOT CLASS "A" CONCRETE.
REINFORCING STEEL: fy = 60 KSI
ALLOWABLE SOIL BEARING PRESSURE: 1.0 T/SQ. FT.

ROADWAY LIGHTING MOUNTING HEIGHT (ft)	SQUARE FOOTING WIDTH 'W' (ft)	SQUARE FOOTING DEPTH 'D' (ft)	REINFORCING SCHEDULE				ESTIMATED QUANTITIES	
			MARK	SIZE	LENGTH	NO. REQ'D	CONCRETE CLASS "A" (cu. yd.)	BARS (lbs)
50	7.00	3.50	#4V	#4	3'-0"	28	6.4	230
			#4H	#4	6'-6"	40		
40	6.50	3.50	#4V	#4	3'-0"	24	5.5	193
			#4H	#4	6'-0"	36		
30	5.75	3.50	#4V	#4	3'-0"	20	4.3	153
			#4H	#4	5'-3"	32		
30 ORNAMENTAL	6.75	3.50	#4V	#4	3'-0"	24	5.9	199
			#4H	#4	6'-3"	36		

THIS STANDARD DRAWING IS FOR USE ON NMDOT PROJECTS. OTHERS WHO USE THE NMDOT STANDARD DRAWINGS DO SO AT THEIR OWN RISK. STANDARD DRAWINGS THAT ARE APPLICABLE TO A SPECIFIC PROJECT WILL BE IDENTIFIED ON THE PROJECT PLANS BUT WILL NOT BE PHYSICALLY INCLUDED IN THOSE PLANS. THE DESIGNER WHO SPECIFIES A STANDARD DRAWING ACCEPTS THE RESPONSIBILITY OF DETERMINING THEIR APPLICABILITY.

NO.	DATE	BY	DESCRIPTION

REVISIONS (OR CHANGE NOTICES)

ALYSSA J BEACH
NEW MEXICO
23675
5/19/2017
REGISTERED PROFESSIONAL ENGINEER

DESIGNED BY: ADA DRAWN BY: DLH CHECKED BY: NJB

APPROVED FOR USE ON NMDOT PROJECTS: Kathy Campbell DATE: 11/17/17

NEW MEXICO DEPARTMENT OF TRANSPORTATION STANDARD DRAWING

ROADWAY LIGHTING
SUPPORT STRUCTURES
TYPE V

SPREAD FOOTING DETAILS

707L-07-10/10 10 of 10

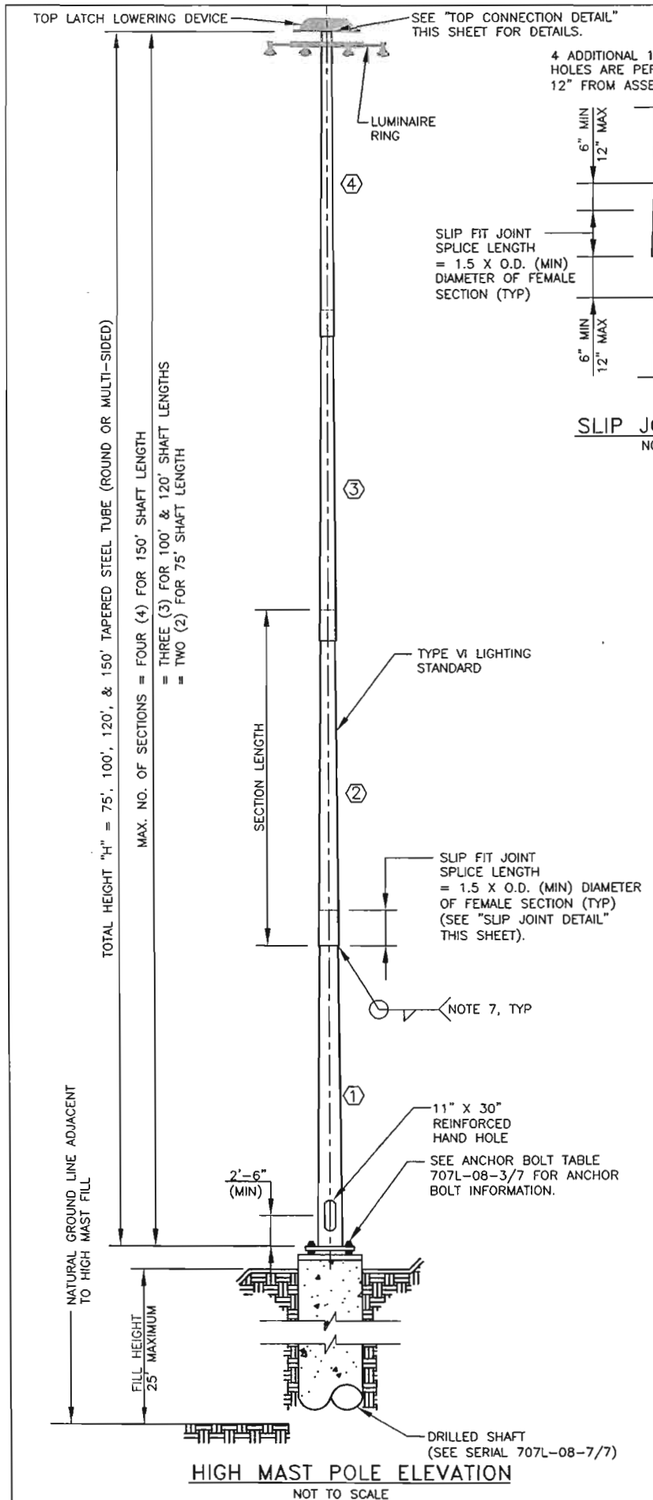

HIGH MAST POLE ELEVATION
NOT TO SCALE

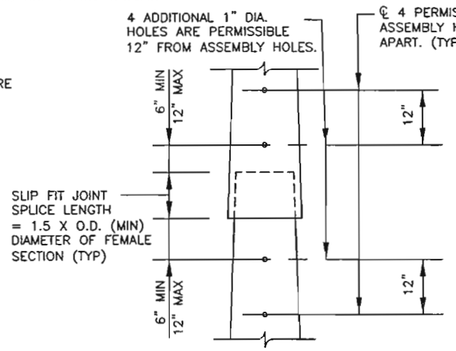

SLIP JOINT DETAIL
NOT TO SCALE

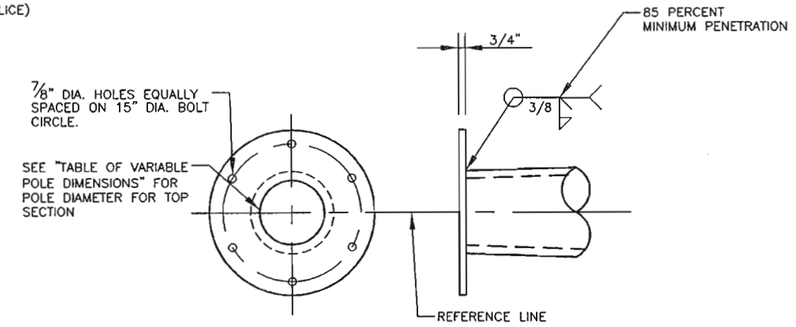

TOP CONNECTION DETAIL
NOT TO SCALE

TABLE OF VARIABLE POLE DIMENSIONS

TOTAL HEIGHT "H"	SECTION	SECTION LENGTH	SPLICE LENGTH	RATE OF TAPER	OUTSIDE DIAMETER		SECTION THICKNESS
					BOTTOM	TOP	
(FT)		(FT)	(IN)	(IN/FT)	(IN)	(IN)	(IN)
150	1	40.00	33.00	0.14	26.000	20.400	0.3750
	2	39.50	26.00	0.14	21.410	15.880	0.3125
	3	39.42	18.00	0.14	16.683	11.165	0.2500
	4	37.50	0.00	0.14	11.853	6.603	0.2391
120	1	42.00	26.00	0.14	22.000	16.120	0.2500
	2	41.33	18.00	0.14	16.902	11.115	0.2391
	3	40.33	0.00	0.14	11.700	6.054	0.1875
100	1	32.00	25.00	0.14	20.000	15.520	0.1875
	2	31.67	19.00	0.14	16.187	11.753	0.1875
	3	40.00	0.00	0.14	12.350	6.750	0.1875
75	1	38.92	20.00	0.14	18.000	12.551	0.1875
	2	37.75	0.00	0.14	13.160	7.875	0.1875

GENERAL NOTES:

1. DESIGN CONFORMS TO 2001 AASHTO STANDARD SPECIFICATIONS FOR STRUCTURAL SUPPORTS FOR HIGHWAY SIGNS, LUMINAIRES AND TRAFFIC SIGNALS, WITH REVISIONS UP TO AND INCLUDING 2006 INTERIMS.

2. DESIGN CRITERIA:

   RECURRENCE INTERVAL = 50 YRS
   SERVICE LIFE = 50 YRS
   DESIGN WIND SPEED = 90 MPH
   GUST EFFECT FACTOR = 1.14
   FATIGUE CATEGORY I
   MATERIALS (POLES AND HAND HOLES): 55,000 PSI MINIMUM YIELD

   MAXIMUM NUMBER OF LUMINAIRES IS EIGHT (8). MAXIMUM WEIGHT OF EACH LUMINAIRE IS 85 LBS, WITH A PROJECTED AREA OF 3.4 FT².

   MAXIMUM ALLOWABLE DEFLECTION = 9% OF POLE HEIGHT.

3. WORKMANSHIP AND MATERIALS SHALL CONFORM TO NEW MEXICO DEPARTMENT OF TRANSPORTATION (NMDOT) STANDARD SPECIFICATIONS FOR HIGHWAY AND BRIDGE CONSTRUCTION CURRENT EDITION. CONTRACTOR SHALL CONTACT NMDOT FOR APPROVED PRODUCTS LISTING.

4. POLES SHALL CONSIST OF ROUND TELESCOPING SECTIONS, TAPERED AT A RATE OF 0.14"/FOOT. MULTI-SIDED SECTIONS WILL BE PERMITTED AS AN ALTERNATE DESIGN. SEE NOTE 9 FOR REQUIREMENTS.

5. MATERIALS:

   A. POLES SHALL BE STEEL OF 50 KSI MINIMUM YIELD STRENGTH AFTER FABRICATION.

   B. BASE PLATES AND ANCHOR BOLT TEMPLATES SHALL BE PER AASHTO M-183 (ASTM A-36).

   C. HARDWARE AND ANCHOR BOLTS SHALL BE PER AASHTO M-314 (ASTM F-1554), GR. 55. EACH BOLT SHALL BE SUPPLIED WITH A MINIMUM OF THREE HEAVY HEX NUTS AND TWO FLAT WASHERS. STEEL BOLT TEMPLATES SHALL BE SUPPLIED WITH ANCHOR BOLTS. NUTS SHALL BE ASTM A-563. WASHERS SHALL BE ASTM A-436.

   D. PRELOAD BOLTS BASED ON BOLT TYPE AND DIAMETER. PROVIDE LOCKING ADHESIVE (ND INDUSTRIES, NYLOCK, LOCKTITE, OR APPROVED EQUAL).

6. GALVANIZING:

   A. POLES AND PLATES SHALL BE GALVANIZED PER AASHTO M-111-94 (ASTM A-123).

   B. HARDWARE AND ANCHOR BOLTS SHALL BE HOT-DIPPED GALVANIZED PER AASHTO M-232 M (ASTM A-153).

7. WELDS:

   ALL FABRICATORS SHALL BE CERTIFIED UNDER NMDOT SPECIFICATION SECTION 541.3 "CERTIFICATION OF STEEL FABRICATORS", AND SHALL CONFORM TO THE LATEST EDITION OF THE STRUCTURAL WELDING CODE (ANSI/AWS D1.1) AND SHALL CONFORM TO SECTION 707 "SIGNAL AND LIGHTING STANDARDS" OF THE CURRENT NEW MEXICO DEPARTMENT OF TRANSPORTATION (NMDOT) STANDARD SPECIFICATIONS AND SPECIAL PROVISIONS OR MEET THE DATA SHOWN ON THESE DRAWINGS.

   FILLET WELD AT BOTTOM OF SLIP FIT JOINT SHALL BE MINIMUM SIZE PER AWS D1.1.

8. THE CONTRACTOR/FABRICATOR SHALL FURNISH EIGHT SETS OF SHOP DRAWINGS OF ALL HIGH MAST LUMINAIRE SUPPORT STRUCTURE COMPONENTS FOR THE TYPE VI LIGHTING STANDARD TO THE STATE BRIDGE ENGINEER FOR APPROVAL. SHOP DRAWINGS SHALL COVER ALL MECHANISMS/PARTS REQUIRED FOR THE INSTALLATION. THE CONTRACTOR SHALL FURNISH AN APPROPRIATE CERTIFICATION OF COMPLIANCE WITH ALL DESIGN REQUIREMENTS. THE CONTRACTOR'S CERTIFICATION SHALL APPEAR ON THE DRAWINGS. THE CONTRACTOR MUST RECEIVE WRITTEN APPROVAL OF THE SHOP DRAWINGS FROM THE ENGINEER PRIOR TO BEGINNING FABRICATION OR ASSEMBLY OF PARTS.

9. THE INFORMATION AND DETAILS PROVIDED FOR POLES, ANCHOR BOLTS, HAND HOLE, AND FOUNDATIONS IN THESE STANDARDS ARE MINIMUM REQUIREMENTS. DESIGN AND DETAILS FOR ALTERNATE DESIGNS AND ALL OTHER LUMINAIRE SUPPORT STRUCTURE COMPONENTS SUCH AS TOP CONNECTION PLATE, SPECIFIC REQUIREMENTS FOR HAND HOLES TO ACCOMMODATE EXTERNAL WINCH, HEADFRAME ASSEMBLY, LUMINAIRE RING ASSEMBLY, AND TOP LATCH LOWERING DEVICE SHALL BE PROVIDED BY CONTRACTOR/FABRICATOR IN COMPLIANCE WITH AASHTO SPECIFICATIONS REFERENCED IN NOTE 1 AND ALL OTHER GOVERNING ELECTRICAL AND MECHANICAL SPECIFICATIONS.

10. THE TOP CONNECTION DETAIL MAY BE REVISED TO COMPLY WITH THE REQUIREMENTS OF THE TOP LATCH LOWERING DEVICE SYSTEM. THE REVISED TOP CONNECTION DETAIL SHALL BE SUBMITTED TO NMDOT FOR REVIEW AND APPROVAL AS PART OF THE DESIGN FOR THE TOP LATCH LOWERING DEVICE SYSTEM.

11. ALL TYPE VI STANDARDS SHALL BE EQUIPPED WITH AN INTERNAL MOTOR ASSEMBLY WITH 20' REMOTE CONTROL FOR THE LOWERING DEVICE. LOWERING DEVICES SHALL BE TOP LATCH AS APPROVED BY LIGHTING DESIGN ENGINEER. THE INTERNAL MOTOR ASSEMBLY AND LOWERING DEVICE WILL BE SUBSIDIARY TO THE HIGH MAST POLE PAY ITEM.

12. THE LOWERING DEVICE, LIGHTING FIXTURES AND POLES SHALL BE MANUFACTURED AND TESTED AS AN INTEGRATED SYSTEM AND BE PROVIDED AND WARRANTED BY THE MANUFACTURER.

13. FACTORY REPRESENTATIVE SHALL PROVIDE ONE DAY TRAINING AND VIDEO TAPE ON OPERATING THE LOWERING DEVICE SYSTEM FOR THE LOCAL MAINTAINING AGENCY AND LOCAL POWER COMPANY. THIS TRAINING SHALL BE APPROXIMATELY ONE-HALF IN THE CLASSROOM AND ONE-HALF IN THE FIELD.

14. APPROXIMATELY 90 DAYS AFTER INSTALLATION, A FACTORY REPRESENTATIVE SHALL RETURN TO THE PROJECT SITE TO ADJUST THE LOWERING DEVICE CABLES AND LATCHING MECHANISMS. THE CONTRACTOR SHALL COORDINATE WITH THE NMDOT LIGHTING ENGINEER, THE LOCAL MAINTENANCE AGENCY, AND THE LOCAL POWER COMPANY TO BE PRESENT WHILE THE ADJUSTMENTS ARE MADE.

15. DURING THE ERECTION OF THE HIGH MAST LIGHTING POLES AND LOWERING DEVICES, A FACTORY REPRESENTATIVE SHALL BE PRESENT TO ENSURE CORRECT ERECTION.

16. CONTRACTOR SHALL PROVIDE COPIES OF ALL HIGH MAST LIGHTING SYSTEM TECHNICAL DATA, CALCULATIONS, SHOP DRAWINGS, AND LUMINAIRE TYPE INFORMATION TO THE LOCAL MAINTAINING AGENCY AND THE LOCAL POWER COMPANY.

17. THE DESIGN PROVIDED FOR THIS STANDARD MUST BE RE-EVALUATED FOR POLES LOCATED IN ELEVATED REGIONS AND POLES LOCATED IN SPECIAL WIND REGIONS EXCEEDING THE DESIGN CRITERIA PROVIDED IN THESE STANDARDS.

18. CONTRACTOR/POLE FABRICATOR SHALL SUBMIT GROUNDING DETAILS FOR REVIEW AND APPROVAL.

19. ALL DESIGNS SUBMITTED FOR APPROVAL MUST BE SIGNED AND SEALED BY A LICENSED ENGINEER IN THE STATE OF NEW MEXICO.

ALFRED P. MURILLO
NEW MEXICO
18841
PROFESSIONAL ENGINEER

12-15-08

NO.	DATE	REV.BY	DESCRIPTION

REVISIONS (OR CHANGE NOTICES)

NEW MEXICO
DEPARTMENT OF TRANSPORTATION
STANDARD DRAWING

HIGH MAST LUMINAIRE
SUPPORT STRUCTURES
TYPE VI

DESIGNED BY NB/MS DRAWN BY CCS CHECKED BY APM

707L-08-1/7 1 of 7

12/15/2008 1:29:59 PM

GB 600 PNM Amendment 1

Final Audit Report 2024-11-01

Created:	2024-10-30
By:	Amanda Archuleta (ajarchuleta@santafenm.gov)
Status:	Canceled / Declined
Transaction ID:	CBJCHBCAABAAO2dtAooY47aaiUmvdxrXeaz5OB4YXTKv

"GB 600 PNM Amendment 1" History

Document created by Amanda Archuleta (ajarchuleta@santafenm.gov)
2024-10-30 - 10:55:31 PM GMT- IP address: 63.232.20.2

Document emailed to Halona Crowe (hcrowe@santafenm.gov) for signature
2024-10-30 - 10:56:55 PM GMT

Email viewed by Halona Crowe (hcrowe@santafenm.gov)
2024-10-31 - 1:49:38 PM GMT- IP address: 174.231.18.16

Document canceled by Amanda Archuleta (ajarchuleta@santafenm.gov)
2024-11-01 - 1:31:24 PM GMT- IP address: 63.232.20.2

Powered by Adobe Acrobat Sign

Docusign Envelope ID: 74D8647D-72EF-4265-9E97-E3F751986F87

FIRST AMENDMENT TO THE AGREEMENT FOR CONVERSION OF STREETLIGHTS OWNED BY THE PUBLIC SERVICE COMPANY OF NEW MEXICO Item #24-0120

This First Amendment to the Agreement for Conversion of Streetlights Owned by the Public Service Company of New Mexico ("First Amendment"), executed as of October ___, 2024, is by and between the Public Service Company of New Mexico, a New Mexico corporation ("PNM" or "Company"), and the City of Santa Fe ("Santa Fe" or "City"), a municipal corporation. The Parties may be referred to herein individually as "Party" or collectively as "Parties."

RECITALS

WHEREAS the Parties executed the Agreement for the Conversion of Streetlights Owned by the Public Service Company of New Mexico ("Agreement") in February of 2024;

WHEREAS the Agreement contemplated the conversion of some of the Company's streetlights into light-emitting diode ("LED") lights ("LED Streetlight Conversion Project");

WHEREAS Santa Fe has asked PNM to complete a second phase of the LED Streetlight Conversion Project, which will consist of converting an additional 957 streetlights into LED lights;

WHEREAS the City has appropriated the funds necessary to complete the second phase of the LED Streetlight Conversion Project, which PNM estimates to be Four Hundred Eighty Thousand Dollars and Zero Cents ($480,000.00); and

WHEREAS the Parties wish to amend the Agreement to contemplate the completion of the second phase of the LED Streetlight Conversion Project and payment for same by Santa Fe.

AGREEMENT

NOW, THEREFORE, in consideration of the mutual covenants herein contained, the receipt and sufficiency of which are hereby acknowledged, the Parties hereby agree to the following:

1. Paragraph 3(a) shall be amended as follows:

   Santa Fe agrees to issue a Purchase Order to PNM in the amount of Four Hundred Eighty Thousand Dollars and Zero Cents ($480,000.00) including applicable GRT for the completion of the second phase of the LED Conversion Project, which shall consist of the conversion of 957 additional streetlights into LED lights. The total amount of compensation, including the amount for the original agreement, shall not exceed $1,050,000.00 including GRT.

   The Purchase Order shall memorialize in writing Santa Fe's request that PNM convert the 957 additional Company-owned streetlights to LED lights within the City of Santa Fe in accordance with the Rate Tariff, the Agreement, and this First Amended Agreement. PNM will share with Santa Fe certain information regarding

Docusign Envelope ID: 74D8647D-72EF-4265-9E97-E3F751986F87

Company-owned streetlights, if needed, so that Santa Fe can prepare the Purchase Order contemplated by this section. Such information includes the number of Company-owned streetlights, the geographic location of Company-owned streetlights, and the types of Company-owned streetlights, categorized by light wattage. PNM will also provide Santa Fe with the cost of a conversion to an LED by listing the cost per operational substitute on Appendix A. Santa Fe agrees to include within the Purchase Order the information required by Section 3(b) of the Agreement.

2. Paragraph 1(k) shall be added to the Agreement. Paragraph 1(k) shall state as follows:

   PNM will make a good faith effort to complete the second phase of the LED Conversion Project within twelve (12) months of the execution of the First Amendment to the Agreement, although the Company cannot guarantee an exact date of completion, as such date is likely to fluctuate, and the City recognizes that the estimated timeline may change due to the lead time necessary for procuring fixtures from the manufacturer, which PNM currently estimates to be approximately 6 weeks.

Section 3. All capitalized terms used in this First Amendment and not otherwise defined or modified herein shall have the meanings set forth in the Agreement.

Section 4. Except as expressly amended by this First Amendment, all other terms of the Agreement shall remain in full force and effect.

Section 5. This First Amendment may be executed in one or more counterparts, including by facsimile or electronic signature, but each such counterpart shall be deemed an original and all such counterparts shall be deemed one and the same instrument.

Section 6. This First Amendment contains the entire understanding of the Parties and supersedes all prior agreements and understandings between the Parties relating to the subject matter herein. This First Amendment shall be binding upon and inure to the benefit of the Parties' respective successors and permitted assigns.

[Signature Page Follows]

Docusign Envelope ID: 74D8647D-72EF-4265-9E97-E3F751986F87

CITY OF SANTA FE

By: _____

Alan Webber
Mayor, City of Santa Fe, New Mexico

Attest:

_____
Geralyn Cardenas, Interim City Clerk

City Attorney's Office:

Marcos Martinez
Marcos Martinez (Oct 29, 2024 13:09 MDT)
_____
Senior Assistant City Attorney

Approved for Finances:

_____
Emily Oster, Finance Director

PUBLIC SERVICE COMPANY OF NEW MEXICO

Signed by:
By: _____
B51818D1E09D410...

Mike Mertz
PNM Vice President, New Mexico Operations

GB 600 PNM Amendment 1

Final Audit Report 2024-11-12

Created:	2024-11-12
By:	Kristy Miera (kamiera@santafenm.gov)
Status:	Signed
Transaction ID:	CBJCHBCAABAAbDMVlAb4Tr6rYaaplbS9w-UKf9FlipQa

"GB 600 PNM Amendment 1" History

Document digitally presigned by DocuSign\, Inc. (enterprisesupport@docusign.com)
2024-10-29 - 3:39:22 PM GMT- IP address: 63.232.20.2

Document created by Kristy Miera (kamiera@santafenm.gov)
2024-11-12 - 5:34:09 PM GMT- IP address: 63.232.20.2

Document sent to ALEXIS LOTERO (aclotero@santafenm.gov) and ajhopkins@santafenm.gov ajhopkins@santafenm.gov (ajhopkins@santafenm.gov) for signature. One of them to sign
2024-11-12 - 5:35:15 PM GMT

Email viewed by ALEXIS LOTERO (aclotero@santafenm.gov)
2024-11-12 - 5:43:24 PM GMT- IP address: 104.47.64.254

Document e-signed by ALEXIS LOTERO (aclotero@santafenm.gov)
Signature Date: 2024-11-12 - 5:45:03 PM GMT - Time Source: server- IP address: 63.232.20.2

Agreement completed.
2024-11-12 - 5:45:03 PM GMT

Powered by Adobe Acrobat Sign

URGENT GB 600 PNM Amendment

Final Audit Report 2024-11-12

Created:	2024-11-12
By:	Kristy Miera (kamiera@santafenm.gov)
Status:	Canceled / Declined
Transaction ID:	CBJCHBCAABAAGsYcaxhHgdJ6Fnz9jtLpayXbL7CvZtVT

"URGENT GB 600 PNM Amendment" History

Document digitally presigned by DocuSign\, Inc. (enterprisesupport@docusign.com)
2024-10-29 - 3:39:22 PM GMT- IP address: 63.232.20.2

Document created by Kristy Miera (kamiera@santafenm.gov)
2024-11-12 - 6:28:19 PM GMT- IP address: 63.232.20.2

Document emailed to Lisa Storey (lmstorey@santafenm.gov) for signature
2024-11-12 - 6:32:28 PM GMT

Email viewed by Lisa Storey (lmstorey@santafenm.gov)
2024-11-12 - 7:18:22 PM GMT- IP address: 104.47.65.254

Document e-signed by Lisa Storey (lmstorey@santafenm.gov)
Signature Date: 2024-11-12 - 7:23:27 PM GMT - Time Source: server- IP address: 63.232.20.2

Document sent to ALEXIS LOTERO (aclotero@santafenm.gov) and Travis Dutton-Leyda (tkduttonleyda@santafenm.gov) for signature. One of them to sign
2024-11-12 - 7:23:32 PM GMT

Document canceled by Kristy Miera (kamiera@santafenm.gov)
Cancel reason: Accidentally added Alexis to the Purchasing group
2024-11-12 - 8:21:59 PM GMT- IP address: 63.232.20.2

URGENT GB 600 PNM Amendment (1)

Final Audit Report 2024-11-12

Created:	2024-11-12
By:	Kristy Miera (kamiera@santafenm.gov)
Status:	Signed
Transaction ID:	CBJCHBCAABAA9V6EeMR-889UWcqFjJOO1R01PqYFVMGl

"URGENT GB 600 PNM Amendment (1)" History

Document digitally presigned by DocuSign\, Inc. (enterprisesupport@docusign.com)
2024-10-29 - 3:39:22 PM GMT- IP address: 63.232.20.2

Document created by Kristy Miera (kamiera@santafenm.gov)
2024-11-12 - 8:25:07 PM GMT- IP address: 63.232.20.2

Document sent to JoAnn Lovato (jdlovato@santafenm.gov) and Travis Dutton-Leyda (tkduttonleyda@santafenm.gov) for signature. One of them to sign
2024-11-12 - 8:27:03 PM GMT

Email viewed by Travis Dutton-Leyda (tkduttonleyda@santafenm.gov)
2024-11-12 - 8:27:32 PM GMT- IP address: 63.232.20.2

Email viewed by JoAnn Lovato (jdlovato@santafenm.gov)
2024-11-12 - 8:48:08 PM GMT- IP address: 63.232.20.2

Document e-signed by Travis Dutton-Leyda (tkduttonleyda@santafenm.gov)
Signature Date: 2024-11-12 - 10:09:59 PM GMT - Time Source: server- IP address: 63.232.20.2

Document emailed to EMILY OSTER (ekoster@santafenm.gov) for signature
2024-11-12 - 10:10:02 PM GMT

Email viewed by EMILY OSTER (ekoster@santafenm.gov)
2024-11-12 - 10:11:18 PM GMT- IP address: 174.240.23.14

Document e-signed by EMILY OSTER (ekoster@santafenm.gov)
Signature Date: 2024-11-12 - 10:59:18 PM GMT - Time Source: server- IP address: 63.232.20.2

Agreement completed.
2024-11-12 - 10:59:18 PM GMT

Powered by Adobe Acrobat Sign

City of Santa Fe
Emergency Determination Form

The emergency procurement method may only be used as described in NMSA 1978, § 13-1-127 and in the City's Procurement Manual XII.

The Department that makes an emergency procurement to plan or prepare for the response to a serious threat to public health, welfare, safety or property caused by a flood, fire, epidemic, riot, act of terrorism, equipment failure or similar event shall account for the money spent in making the procurement and report on that accounting to the City's Finance Department Director within ninety days after the end of the contract or fiscal year in which the procurement was made, whichever comes first.

I. Department: Public Utilities, City of Santa Fe

Department Director: John Dupuis

Department Contact: P. Fred Heerbrandt, P.E.

Department Telephone Number: 505-955-4623

City of SF Chief Procurement Officer: Travis Dutton-Leyda, CPO

Telephone Number: (505) 629-8351

II. Name of Contractor: SKE Contractors, LLC.

Address of Contractor: 44 Coyote Mountain Road, Santa Fe, NM 87505

Amount of prospective contract: $3,027,178

Term of prospective contract: 24 Months, Proposed Contract Attached

Location of Services: Within Call Mejia and adjacent, and adjacent to St Francis Road to its intersection with Paseo de Peralta

III. **Please thoroughly list the services (scope of work), construction or items of tangible personal property of the contract:**

Provide pipe bursting/crushing of a sanitary sewer line named as the Calle Mejia Project (Sewer line restoration from Calle Mejia to the intersection of Paso De Peralta), (The "Project"). The Project consists of replacing approximately19,500 feet of ten-inch clay sewer line with a 12-inch High Density Polyethylene (HDPE) pipe, including, Closed Circuit Television Video (CTTV) inspection, washing of the existing sanitary sewer line, and insert a new 12-inch HDPE pipe utilizing pipe bursting method following insertion procedure specification ASTM F 585.

IV. **Provide an explanation for the justification of the procurement including a description of the emergency condition(s) requiring use of emergency procurement and the practicable competition utilized in compliance with NMSA 1978, § 13-1-127.**

Within FY23, Wastewater attempted a closed-circuit television review of the Sanitary Sewer line located on Calle Mejia. While attempting to televise the existing sewer, the line collapsed on the rover. A point repair was completed within the section of the collapsed line, but when trying to repair the pipe, it continued to collapse, due to the poor condition of the clay pipe, and an expanded section was replaced. This section of Sanitary Sewer line is old and could collapse at any time blocking the sewage flow which represents a public health risk to users within the area, including sewage backing up into their houses and businesses and spilling into the road.

On 7/10/2024 I was informed of the concern, and I immediately contacted the Chief Procurement Officer and informed him of the situation and mentioned emergency procurement, I also investigated the Texas Buy Board, a Cooperative Purchasing agreement which we believed we could utilize. After additional investigation the Buy Board could not be used because New Mexico was not included within the bid Process. It is imperative that we move forward with the repairs as this Sewer Line could fail at any time creating blockage and back-ups. This would be costly for the city, with possible repairs to residents and business locations.

Public Utilities is also working to formulate a contract based on the requirements of this project, and possible liability which may arise.

V. **Please describe what measures are being taken to minimize the duration and effect of this emergency procurement (for example: is the emergency only in place until a competitive process can be completed, etc.).**

The Wastewater Management Division is addressing this situation with an Emergency Determination since based on past experience, this sewer main is at risk of imminent failure due to observed structural issues with the clay pipe. Only this previously identified length of sewer main is being addressed under this Determination.

VI. **Describe what measures the Department will take in the future to prevent/mitigate use of emergency procurement under similar circumstances.**

Sanitary Sewer rehabilitation projects are conducted periodically to address older sewer lines within the city using other procurement methods, but the timeline to acquire these services for Calle Mejia presented unacceptable risks

Certified by:



City Chief Procurement Officer, Travis Dutton-Leyda — **Date** Oct 24, 2024

City Approval by:



Department Director, John Dupuis — **Date** Oct 24, 2024



City Attorney, Erin McSherry — **Date** Oct 23, 2024



John Blair, City Manager — **Date** Oct 25, 2024



Finance Director, Emily Oster — **Date** Oct 24, 2024

Note: All emergencies must be posted to the SPD website:
https://www.generalservices.state.nm.us/statepurchasing/submit-emergency.aspx
and the City of Santa Fe's website:
https://santafenm.gov/finance-2/purchasing-1/solicitations

Calle Mejia Sewer Pipe Bursting Project
Proposal for Sanitary Sewer Pipe-bursting Project
SKE Project Number: NM001-2024
8/28/2024

ITEM #	UNIT	DESCRIPTION	EST. QUANTITY	UNIT PRICE	TOTAL PRICE
1	EA	Mobilization - CCTV (Pre/Post TV)	2	$ 8,500.00	$ 17,000.00
2	EA	Mobilization - Pipe Bursting	1	$ 51,000.00	$ 51,000.00
3	EA	Mobilization - CIPP/MH Rehab	1	$ 100,000.00	$ 100,000.00
4	WK	Traffic Control	14	$ 7,400.00	$ 103,600.00
5	LS	Bonds and Insurance	1	$ 130,000.00	$ 130,000.00
6	LF	Pre-TV and Clean Existing 10" Line	3735	$ 7.50	$ 28,012.50
7	LF	Post TV 12" Rehabilitated Lines	3735	$ 5.00	$ 18,675.00
8	HR	Extra cleaning for obstruction removal (4hr min)	12	$ 675.00	$ 8,100.00
9	LF	Pipe burst existingg 10" sanitary sewer to 12.75" OD SDR 17 HDPE, up to 12 ft deep	3735	$ 290.00	$ 1,083,150.00
10	EA	San Swr Lateral reconnection of 4" to 6" PVC (SDR35) to main using PVC saddle, includes up to 5 LF of lateral, 0-10 ft deep	6	$ 3,000.00	$ 18,000.00
11	LF	Extra length San Swr lateral 4" to 6" (SDR 35 or SCH 40, 0-10 ft deep	150	$ 115.00	$ 17,250.00
12	EA	San Swr cleanouts for laterals (SDR 35 or SCH 40, no box	6	$ 700.00	$ 4,200.00
13	EA	Obstruction removal, 0-10 ft deep	12	$ 1,300.00	$ 15,600.00
14	EA	Obstruction removal, up to 15 ft deep	2	$ 3,200.00	$ 6,400.00
15	LS	Trench safety	1	$ 33,750.00	$ 33,750.00
16	WK	Bypass pumping with flow control	12	$ 10,800.00	$ 129,600.00
17	CY	Flowable fill (If required)	10	$ 500.00	$ 5,000.00
18	TON	Select fill (If required)	40	$ 140.00	$ 5,600.00
19	LF	10" UV Cured CIPP (4.375 MM	1729	$ 220.00	$ 380,380.00
20	EA	CIPP Bypass setup	7	$ 14,500.00	$ 101,500.00
21	EA	Internal service reinstatement	25	$ 1,900.00	$ 47,500.00
22	LF	CIPP clean and TV for liner prep	1729	$ 40.00	$ 69,160.00
23	LF	Post TV liner inspection	1729	$ 9.50	$ 16,425.50
24	EA	Bench and Invert of all manholes	22	$ 3,900.00	$ 85,800.00
25	SF	1" Cementitious grout all manholes	2927	$ 60.00	$ 175,620.00
26	SF	Manhole Spraywall epoxy liner (300 MILS)	2927	$ 65.00	$ 190,255.00
27	GAL	Chemical grout as nneded	50	$ 800.00	$ 40,000.00
28	EA	Point repair, up to 10ft deep	2	$ 5,500.00	$ 11,000.00
29	EA	Pont repair, up to 15ft deep	2	$ 8,000.00	$ 16,000.00
30	SY	City Street replacement, with laydown machine, Virgin asphalt	100	$ 101.00	$ 10,100.00
31	SY	City Street replacement, w/o laydown machine, Virgin asphalt	100	$ 101.00	$ 10,100.00
32	SY	Replace City Street pavement with temporary cold patch	50	$ 95.00	$ 4,750.00
		TOTAL BASE BID			**$ 2,933,528.00**

ITEM #	UNIT	DESCRIPTION	EST. QUANTITY				
EX1	CY	Rock excavation	20	$	295.00	$	5,900.00
EX2	CY	Spoil haul-off	20	$	2,500.00	$	50,000.00
EX3	SF	Site restoration, if needed (landscape vegitation)	50	$	135.00	$	6,750.00
EX4	LF	Waterline relocation, 2" to 10" PVC	100	$	84.00	$	8,400.00
EX5	LS	Archeological required Mob/Demob	1	$	1,400.00	$	1,400.00
EX5	HR	Archeological required delay	12	$	350.00	$	4,200.00
EX6	CY	Exploratory excavation	200	$	85.00	$	17,000.00
		TOTAL EXTRA ITEMS BID				**$**	**93,650.00**

TOTAL BASE BID + EXTRA ITEMS	**$ 3,027,178.00**

CITY OF SANTA FE

Date: October 18, 2024

To: Mayor Alan Webber and Governing Body
Finance and Public Works, and Utilities Committees

Via: John Dupuis, Public Utilities Director JD

From: P. Fred Heerbrandt, P.E., Engineer Supervisor FH

Subject: Calle Mejia Sanitary Sewer Rehabilitation Project

Vendor Name: SKE Contractors, LLC

Vendor Number: 10552

ITEM AND ISSUE:
The Public Utilities Department respectfully requests your review and approval of an Emergency Determination for the rehabilitation of 19,500 feet of vitrified clay sewer pipe using a pipe bursting construction method. Request for the Approval of a construction contract in the total amount of $ 3,275,028.20, including NMGRT for construction services for a two-year period from the date of approval

Action Requested: Approval of a construction contract and a BAR in the amount of $3,275,029 from the WWMD Enterprise Fund

BACKGROUND AND SUMMARY:
The sanitary sewer line to be replaced is in Calle Mejia and proximate to the roadway and St. Frances Drive. The Project consists of installing approximately19,500 feet of twelve-inch diameter High Density Polyethylene (HDPE) pipe along the grade line of the existing ten-inch clay sewer pipe. The operation shall be conducted with a hydraulic or pneumatic pulling or pushing apparatus and a pipe expander or pipe reaming device.

PROCUREMENT METHOD:
This project is being procured by an Emergency Determination due to the poor condition of the existing pipe and high probability of a future collapse or structural failure, which could impact the sewer facilities and/or the roadway.

Chief Procurement Officer Approval: _____ **Date:** Oct 29, 2024
Comment/Exceptions: _____
Supporting Information:

CONTRACT NUMBER:
The FY25 Munis contract number is 3250255

$$$$$ SOURCE/REVENUE: ☒**Expense** | ☐**Revenue**

The funding source is:
Fund Name/Number: WWMD Enterprise Fund/Fund 500
Munis Org Name/Number: Wastewater-Capital Projects 5000375
Munis Object Name/Number: WIP Construction 572970

Budget Officer Approval: Andy Hopkins **Date:** Oct 29, 2024
Comment/Exceptions: _____

Grant ☐Yes | ☒ No

Grant #: _____

Grant Manager/Accounting Officer Approval: _____ **Date:** _____
Comment/Exceptions: _____

Project ☐Yes | ☒ No

Project Ledger #: _____

CAPITAL ASSET (will this procurement result in a tangible item that costs more than $5,000
☐Yes | ☒ No

Asset # (if known): _____

Repair or Replacement of Existing Equipment:

☒Yes | ☐ No
~If yes -> ☐Repair | ☒ Replacement

Please explain: The existing 10" VCP sewer pipe will be replaced with a 12" HDPE sewer pipe.

Capital Project:
(New and improvement projects that are going to cost $10,000 or more)
☒ Yes | ☐ No

Anticipated length of project: Contract is for two years from date of approval.

Asset Manager Approval: Lisa Storey (Oct 29, 2024 16:30 MDT) **Date:** Oct 29, 2024
Comment/Exceptions: Project will be tracked in CIP until completed

Was this service deemed construction: ☒ Yes | ☐ No
~If yes, does this expenditure exceed $25,000? ☒ Yes | ☐ No
~If yes, did you obtain the appropriate bond? ☒ Yes | ☐ No
~Performance and Payment & Labor - NMSA 1978, Section 13-4-18

Department Approvals:
IT Components: ☐ **Yes** | ☒ **No**
Vehicles: ☐ **Yes** | ☒ **No**
Facilities, Furniture, Fixtures, Equipment: ☐ **Yes** | ☒ **No**

Approval:_____ **Title:**_____ **Date**:_____
Approval:_____ **Title:**_____ **Date**:_____
Comment & Exceptions:_____

Department Contract Administrator Contact Info: P. Fred Heerbrandt, P.E., pfheerbrandt@santafenm.gov

ATTACHMENTS:

Vendor's Quote
Memo
Santa Fe Business License
Certificate of Liability Insurance
Construction Services Contract
Emergency Determination

Log # *{Finance use only}*:	
Journal # *{Finance use only}*:	

City of Santa Fe, New Mexico
BUDGET AMENDMENT RESOLUTION (BAR)

DEPARTMENT / DIVISION NAME	DATE
Public Utilities/Wastewater	9/17/2024

ITEM DESCRIPTION	ORG	OBJECT	PROJECT	INCREASE	DECREASE
EXPENDITURES				*{enter as positive #}*	*{enter as negative #}*
WIP Construction	5000375	572970		3,275,029	
REVENUES				*{enter as negative #}*	*{enter as positive #}*
				$ 3,275,029	$ -

JUSTIFICATION: *(use additional page if needed)*
--Attach supporting documentation/memo

Budget Increase from Fund 500 Cash Balances: Waste Water Enterprise Fund for SKE CONTRATORS LLC

See attached memo for additonal information.

{Complete section below if BAR results in a net change to ANY Fund}

Fund(s) Affected	Fund Balance Increase/(Decrease)
500	
TOTAL:	$ (3,275,029)

Lawrence Garcia — 9/25/2024
Prepared By *{print name}* — Date

Division Director Signature *{optional}* — Date

John Dupuis (Oct 22, 2024 09:31 MDT) — Oct 22, 2024
Department Director Signature — Date

{Use this form for Finance Committee/ City Council agenda items ONLY}

CITY COUNCIL APPROVAL

City Council Approval Date:

Agenda Item #:

Andy Hopkins — Oct 29, 2024
Budget Officer — Date

Emily K. Osler — Oct 29, 2024
Finance Director *{≤ $5,000}* — Date

City Manager *{≤ $60,000}* — Date

Item #:
Munis Contract #: 3250255
SWPA/GSA/Coop/RFP/ITB #:
Emergency

CITY OF SANTA FE

CONSTRUCTION CONTRACT

THIS CONTRACT is made and entered into by and between the City of Santa Fe, New Mexico, hereinafter referred to as the "City," and SKE Contractors, LLC. hereinafter referred to as the "Contractor," and is effective as of the date set forth below upon which it is executed by the Parties.

RECITALS

WHEREAS, the City, through its Governing Body, is authorized to enter into a construction Contract for the project; and

WHEREAS, the City has procured this Contract according to the established State and Local Purchasing procedures for contracts of the type and amount; and

The City and the Contractor hereby agree as follows:

1. Scope of Work

A. The Contractor shall perform the following work:

The Contractor shall perform all the work required by the Contract Documents. The work consists of furnishing all mobilization, equipment, labor and materials for the rehabilitation of sanitary sewer lines through pipe bursting methods as specified in the sewer line location plans and specifications and other incidental work and traffic control as required in the City of Santa Fe, New Mexico.

The contractor's attention is directed to the fact that all applicable Federal Laws, State Laws, Municipal Ordinances, and the rules and regulations of all authorities having jurisdiction over said item shall apply to the project throughout, and they will be deemed to be included in the contract documents the same as though herein written out in full.

The sanitary sewer line to be replaced is in Calle Mejia and proximate to the roadway and St. Frances Drive. The Project consists of installing approximately19,500 feet of twelve-inch diameter High Density Polyethylene (HDPE) pipe along the grade line of the existing ten-inch clay sewer pipe. The operation shall be conducted with a hydraulic or pneumatic pulling or pushing apparatus and a pipe expander or pipe reaming device. The pipe expander or reaming device shall be pushed or pulled through the existing pipe on grade, widening the existing pipe material for the insertion of the new pipe material.

SUBMITTALS

A. Submit all information, shop drawings, and product data as directed below to the owner's representative for review and approval.

B. Product Data:
    1. All pipe, fittings, and accessories to be used.
    2. The manufacturer's installation recommendations including the recommended allowable pulling force to prevent damage to the pipe.
    3. If HDPE is used, information indicating the interior color for the HDPE pipe.

C. Installation Procedure:
    1. The Contractor shall submit, in detail, the procedure and the steps to be followed for the installation of the pipe bursting system selected including, but not limited to:
        a) Traffic control plan.
        b) Layout, storage, and pipe handling areas.
        c) Plan for locating, exposing, and reconnecting service laterals.
        d) Bypass pumping plan.
        e) Point repair plan for removing sags, offset joints, constrictions, or obstructions.
    2. Any proposed changes in installation procedures shall require submittal of revised procedures and acceptance by the City.
D. Preconstruction Television Inspections.
E. Post-Construction Television Inspections.
F. Updated schedule of repairs for the segments included in the contract documents which are to be submitted after the preconstruction CCTV inspections have taken place and the segments reviewed for any modifications to the planned work.
G. Certificates:
    1. Affidavit of compliance with applicable standards.
    2. Test certificates.
    3. As requested, Certificates of Training for the processes used.

QUALITY ASSURANCE

A. The Contractor is responsible for the quality assurance and quality control of the Work.
B. Work shall be performed by a Contractor, with a proven record of performance for similar installations. Contractor shall submit the following:
    1. Contractor shall be experienced in the installation of HDPE sewer mains using the pipe bursting method of trenchless rehab for a minimum period of 5 years.
    2. Warranty:
        a) Terms: Standard Manufacturer's warranty.
        b) Contractor Warranty Period: Two year from City Acceptance.

PRODUCTS

HIGH DENSITY POLYETHYLENE (HDPE) PIPE

A. HDPE pipe for trenchless sewer line replacement shall be solid wall high density polyethylene (HDPE) pipe, meeting the requirements of ASTM F714, ASTM D1248, and ASTM D3350.
B. The pipe shall be manufactured from high density high molecular weight polyethylene resin and shall meet or exceed the requirements of ASTM D3350 for PE4710 material with a cell classification of 445474C, or better.
C. The minimum wall thickness of the HDPE shall meet the following:

1. 0-15 feet = SDR 17
2. >15 feet = SDR 15.5

D. The pipe shall have sufficient strength to withstand both service and installation loads.
E. The pipe and fitting manufacturer shall certify that samples of their production pipe have undergone stress regression testing, evaluation, and validation in accordance with ASTM D2837 and PPI TR-3. Under these procedures, the minimum hydrostatic design basis shall be certified by the pipe manufacturer to be 1600 psi at 73°F and 800 psi at 140°F.

MANHOLE ADAPTERS

A. Manhole adapters for pipes between 4 and 12 inches in diameter shall be Fernco Concrete Manhole Adapter or approved equal.

RE-ESTABLISHMENT OF SERVICE CONNECTIONS

A. Saddles:
   1. HDPE Pipe:
      a) Heat fusion saddles shall be made of polyethylene pipe that meets the minimum specified physical properties and is suitable for fusion welding.
      b) Fusion saddles shall be Branch Saddle as manufactured by Driscopipe, Miller, DuPont, or approved equal.
B. Compression Fit Connection:
   1. The connection shall be specifically designed for connection to the sewer main being installed.
   2. Service connection shall consist of a PVC hub, rubber sleeve and stainless-steel band. Rubber sleeve and gasket shall meet the requirements of ASTM F 477. Gaskets shall be installed by the manufacturer. The water-based solution provided by the manufacturer shall be used during assembly. Do not use pipe lube.
   3. Connection shall be Inserta Tee as manufactured by Inserta Fittings Co. or approved equal.
C. Non-Shear Flexible Coupling:
   1. Connections to existing service laterals shall be made using non-shear flexible couplings.
   2. All flexible couplings shall conform to ASTM Cl 173 and shall be as manufactured by Fernco Inc., MaxAdaptor or approved equal.

EXECUTION

INSTALLATION PROCEDURE

The Contractor shall submit, in detail, the procedure and the steps to be followed for the installation of the pipe bursting system selected, including location of insertion and launching pits, even if the process is named in the specification. All such instructions and procedures submitted shall be carefully followed during installation. Any proposed changes in installation procedures shall require submittal of revised procedures and acceptance by the City.

PIT LOCATIONS

Location and number of insertion or launching pits will be chosen by the Contractor and will typically be located near existing or proposed manholes, at logical breaks in the construction phasing, or at locations to comply with access or maintenance requirements.

EQUIPMENT

The Contractor shall utilize pipe bursting equipment with adequate pulling/pushing force to complete pulls in a timely manner. The Contractor shall provide equipment on the pulling mechanism to verify the pulling/pushing force exerted on the pipe does not exceed the manufacturer's recommendation for allowable pulling force to prevent damage to the pipe. Where the actual pulling force exceeds the allowable pulling force the Contractor shall take steps to reduce the pulling force necessary by either oversizing the cut or lubricating the outside pipe surface.

MINIMIZE NOISE IMPACTS

A. Means and methods should be employed and described in appropriate submittals to ensure that work of a high decibel volume is performed away from business and/or residential properties to the best extent possible. Such description shall include times and durations that are compatible with the neighborhood in which the work is being performed. No such work will be performed in the late afternoon, early evening or weekends unless described, submitted and approved in advance on projects that work outside of usual and customary hours has been previously approved.
B. Provide silencers or other approved devices to reduce machine noise, when it exceeds the City's noise ordinance.

PROTECTION

A. The Contractor shall provide protection for the general safety of workers, pedestrians and traveling public throughout this project. Existing surface improvements and underground facilities and utilities shall be the contractor's responsibility to protect and/or support. Damage caused by the Contractor shall be repaired at no expense to the City. Protection to be provided includes, but is not limited to:
    1. Barricades, warning lights and signs for excavations.
    2. The Contractor shall install all pulleys, rollers, bumpers, alignment control devices and other equipment to protect existing manholes, and to protect the pipe from damage during installation. Lubrication may be used as recommended by the manufacturer. Under no circumstances shall the pipes be stressed beyond their elastic limit.
    3. Do not allow sand, debris, or runoff to enter sewer system.
    4. Verify location of all underground utilities and facilities potentially impacted by rehabilitation or other activities and take necessary precautions to provide protection from damage. Damage caused by Contractor shall be Contractor's responsibility and repaired at Contractor's own expense, and at no additional cost to the City.
    5. Protect the new pipe and components during all phases of work, including hauling, installation, entry into the launching pit, and prevention of scarring or gouging of the pipe or components.

TELEVISION INSPECTION

A. The Contractor shall video (CCTV) inspect the sewer pipe.
B. Preconstruction Television Inspection: Pipe shall be inspected immediately prior to pipe bursting to verify the existing pipe conditions are acceptable for pipe bursting and to locate and verify all active service line connections. If existing pipe conditions are not acceptable for pipe bursting, contact the City. If there is a sag in the existing line, see paragraph SAGS IN LINE below.
C. Post-Construction Television Inspection: Contractor shall inspect the pipe after pipe bursting to locate and verify that all active service line connections were re-established.

D. Preconstruction and Post-Construction Television Inspection documentation shall be submitted to the City for review and acceptance of the Work.

SEWAGE BYPASS

When required for acceptable completion of pipe bursting, the Contractor shall provide for continuous sewage flow around the section(s) of pipe designated for the installation of replacement pipe. The pump and bypass lines shall be of adequate size and capacity to handle the flow. A backup pumping system shall be available on-site if the primary system fails.

SAGS IN LINE

A. If the Pre-Installation CCTV reveals an unidentified sag in the existing sewer, the Contractor shall inform the City and request direction. The city may require the Contractor to eliminate the sag and install new pipe at a uniform grade prior to pipe bursting the remaining portion of the pipe segment. If the sag has been identified in the Contract Documents, the Contractor shall address the sag as directed in the Contract Documents prior to pipe bursting.
B. If post-installation video (CCTV) inspection reveals a sag in the new line where none existed prior to the Work being performed, the Contractor shall remove or repair the sag at no additional cost to the City.

SERVICE LATERALS AND CONNECTIONS

A. Existing service connections shall be located and exposed before initiating sewer main replacement operations. All service laterals attached to the existing sewer shall be completely disconnected and isolated from the existing sewer before the pipe bursting operations. Service laterals shall not be reconnected to the new sewer line until the new line is installed. Any services remaining offline for more than 12 hours, or any connections deemed necessary by the City to protect the customer, shall be bypass pumped until such time that they can be reconnected.
B. Reconnection of service laterals to the installed pipe shall be accomplished using an approved method.

PIPE JOINING

A. HDPE Pipe:
    1. The HDPE pipe shall be assembled and joined at the site using the butt-fusion method conforming to ASTM D2657 to provide a leak proof joint. All equipment and procedures used shall be used in strict compliance with the manufacturer's recommendations. Fusing shall be accomplished by personnel certified as fusion technicians by a manufacturer of HDPE pipe and/or fusing equipment.
    2. The butt-fused joint shall be in true alignment and shall have uniform roll-back beads resulting from the use of proper temperature and pressure. The joint shall be allowed adequate cooling time before removal of pressure. The fused joint shall be watertight and shall have tensile strength equal to or greater than that of the pipe.
    3. All internal beads shall be removed after the cooling time using a suitable bead removal tool. Use of the bead removal tool shall not induce any slits, gouges or defects in the pipe wall. The beads shall be bent back at several positions. No evidence of the bead splitting shall be seen. If the bead is seen to split at any point, then the joint shall be cut from the pipeline and remade. If a similar defect recurs, all further production jointing shall cease

until the equipment has been thoroughly cleaned and examined. New trial joints shall be made and shown to be satisfactory.

4. All defective joints shall be cut out and replaced at no additional cost to the City. All joints shall be subject to acceptance by the City and/or his representative prior to insertion. Any section of the pipe with a gash, blister, abrasion, nick, scar, or other deleterious fault greater in depth than ten percent (10%) of the wall thickness, shall not be used and must be removed from the site. However, a defective area of the pipe may be cut out and joint fused in accordance with the procedures stated above. In addition, any section of the pipe having other defects such as concentrated ridges, discoloration, excessive spot roughness, pitting, variable wall thickness or any other defect of manufacturing or handling as determined by the City and/or his representative shall be discarded and not used.
5. The wall color of the interior pipe surfaces shall be light green or other color approved by the City so that a clear detail examination with CCTV inspection equipment may be made. Product data indicating the interior color to be used shall be submitted for review and approval.

HDPE PIPE RELAXATION AND COOLING

The installed pipe shall be allowed the manufacturer's recommended amount of time, but not less than four (4) hours, for cooling and relaxation due to tensile stressing prior to any reconnection of any service lines, sealing of the annulus or backfilling of the insertion pit. Four (4) inches to eight (8) inches of excess length of new pipe shall be allowed to protrude into the manhole.

MANHOLE SEALING

A. Existing Manholes:
   1. A manhole adapter shall be placed circumferentially on the replacement pipe and encased with a non-shrink grout to prevent infiltration into the manhole.
   2. The manhole adapter shall be installed in accordance with manufacturer's recommendations.
   3. Non-shrink grout shall be installed in accordance with Section 03370 - Sewer Manhole Construction.
B. New Manholes:
   1. Where new manholes are installed in conjunction with pipe bursting, the manhole shall be sealed in accordance with Section 03370 - Sanitary Sewer Manhole Construction.

FIELD QUALITY CONTROL

A. Prior to service line reinstatement, all pipelines shall be tested in accordance with City Standards.
B. If air testing is not possible, the Contractor shall notify the City for further direction.

PROTECTION OF WORK AND PROPERTY

A. The Contractor shall always safely guard the Owner's property from injury or loss in connection with this contract.
B. The Contractor will bear all costs if any damage occurs due to poor weather, etc., while excavation is open.
C. The Contractor will construct the project without any damage to adjacent property, sidewalks, street,

vegetation, etc., unless specifically called out on the drawings to be removed and/or removed and replaced. If damage does occur, Contractor will bear all costs of repair and restoration to its original state.

PUBLIC RELATIONS

The Contractor shall cooperate with the City's Authorized Representative in maintaining a high degree of sensitivity to the needs of property and residence owners along the routes at the various project sites. The use of door hangers and/or personal visits to each affected residence informing them of the Work at least two days prior to beginning the Work is required. The Contractor shall prepare a brief and concise Fact Sheet of the proposed closures for submittal to the City's Office of Public Affairs (505-955-6045) of the planned construction activities one week in advance of the construction activity. This shall also include information for a Fact Sheet regarding public health concerns and the construction process. The Contractor may be required to contact public/private agencies at the direction of the City's Office of Public Affairs. The Contractor shall provide the City's Authorized Representative with a copy of each Fact Sheet that is sent to the City's Office of Public Affairs. The preparation and delivery of the door hangers, visits, and Fact Sheet will not be a separate pay item but shall be considered incidental to the work in executing the construction contract.

2. Compensation

A. The City shall pay to the Contractor in full payment for services satisfactorily performed as described in Exhibit "A" attached and incorporated herein. such compensation not to exceed three million twenty-seven thousand one hundred and seventy-eight dollars ($3,027,178.00), excluding gross receipts tax. The New Mexico gross receipts tax levied on the amounts payable under this Contract shall be paid by the City to the Contractor, as follows:

The Unit Bid Contract Total is determined as follows:

Base Bid (OR BID ALTERNATE A)	$ 3,027,178
Gross Receipts Tax (8.1875%)	$ 247,850.20
Base Bid (OR BID ALTERNATE A) including NMGRT	$ 3,275,028.20

The total amount payable to the Contractor under this Contract, including Alternates (if needed) gross receipts tax and expenses, shall not exceed three million two hundred seventy-five thousand twenty-eight dollars and twenty cents, ($3,275,028.20) including NM gross receipts tax. This amount is a maximum and not a guarantee that the work assigned to be performed by Contractor under this Contract shall equal the amount stated herein. The parties do not intend for the Contractor to continue to provide services without compensation when the total compensation amount is reached. Contractor is responsible for notifying the City when the services provided under this Contract reach the total compensation amount. In no event will the Contractor be paid for services provided in excess of the total compensation amount without this Contract being amended in writing prior to those services in excess of the total compensation amount being provided.

B. Payment is subject to availability of funds pursuant to the Appropriations Paragraph set forth below and to any negotiations between the parties from year to year pursuant to Paragraph 1, Scope of

Work, and to approval by the City. All invoices MUST BE received by the City no later than thirty 30) days after the termination of the Fiscal Year in which the services were delivered. Invoices received after such date WILL NOT BE PAID.

C. Contractor must submit a detailed statement accounting for all services performed and expenses incurred. If the City finds that the services are not acceptable, within thirty days after the date of receipt of written notice from the Contractor that payment is requested, it shall provide the Contractor a letter of exception explaining the defect or objection to the services, and outlining steps the Contractor may take to provide remedial action. Upon certification by the City that the services have been received and accepted, payment shall be tendered to the Contractor within twenty-one days after the date of acceptance. If payment is made by mail, the payment shall be deemed tendered on the date it is postmarked.

D. If the City fails to pay the contractor within twenty-one days after receipt of an undisputed request for payment, the City shall pay interest to the contractor beginning on the twenty-second day after payment was due, computed at one and one-half percent of the undisputed amount per month or fraction of a month until the payment is issued. If the City receives an improperly completed invoice, the City shall notify the sender of the invoice within seven days of receipt in what way the invoice is improperly completed, and the owner has no further duty to pay on the improperly completed invoice until it is resubmitted as complete.

E. **Notice of Extended Payment Provision for Grant Funded Contracts**. This contract allows the City to make payment within 45 days after submission of an undisputed request for payment for contracts funded by grant money consistent with NMSA 1978, sec. 57-28-5(B).

3. Term

THIS CONTRACT SHALL NOT BECOME EFFECTIVE UNTIL APPROVED IN WRITING BY THE CITY. This contract shall terminate two (2) years from date of final signature. The City reserves the right to renew this contract on an annual basis by mutual agreement not to exceed a total of ten (10) years in accordance with NMSA 1978, Sections 13-1-150 through 152.

4. Termination

A. Grounds. The City may terminate this Contract for convenience or cause. For contracts within their authority, the City Manager or their designee is authorized to provide the notice of termination, otherwise such notice of termination shall be provided by the Mayor or their designee as authorized by the Governing Body. The Contractor may only terminate this Contract based upon the City's uncured, material breach of this Contract.

B. Notice; City Opportunity to Cure.

1) Except as otherwise provided in Paragraphs 7.A and 17, the City shall give Contractor written notice of termination at least thirty (30) days prior to the intended date of termination.

2) Contractor shall give City written notice of termination at least thirty (30) days prior to the intended date of termination, which notice shall (i) identify all the City's material breaches of this Contract upon which the termination is based and (ii) state what the City must do to cure such material breaches. Contractor's notice of termination shall only be effective (i) if the City does not cure all material breaches within the thirty (30) day notice period or (ii) in the case of material breaches that cannot be cured within thirty (30) days, the City does not, within the thirty

(30) day notice period, notify the Contractor of its intent to cure and begin with due diligence to cure the material breach.

3) Notwithstanding the foregoing, this Contract may be terminated immediately upon written notice to the Contractor (i) if the Contractor becomes unable to perform the services contracted for, as determined by the City; (ii) if, during the term of this Contract, the Contractor is suspended or debarred by the City; or (iii) the Contract is terminated pursuant to Paragraph 5, "Appropriations," of this Contract.

C. Liability. Except as otherwise expressly allowed or provided under this Contract, the City's sole liability upon termination shall be to pay for acceptable work performed prior to the Contractor's receipt or issuance of a notice of termination; provided, however, that a notice of termination shall not nullify or otherwise affect either party's liability for pre-termination defaults under or breaches of this Contract. The Contractor shall submit an invoice for such work within thirty (30) days of receiving or sending the notice of termination. *THIS PROVISION IS NOT EXCLUSIVE AND DOES NOT WAIVE THE CITY'S OTHER LEGAL RIGHTS AND REMEDIES CAUSED BY THE CONTRACTOR'S DEFAULT/BREACH OF THIS CONTRACT.*

5. Appropriations

The terms of this Contract are contingent upon sufficient appropriations and authorization being made by the Governing Body for the performance of this Contract. If sufficient appropriations and authorization are not made by the Governing Body, this Contract shall terminate immediately upon written notice being given by the City to the Contractor. The City's decision as to whether sufficient appropriations are available shall be accepted by the Contractor and shall be final. If the City proposes an amendment to the Contract to unilaterally reduce funding, the Contractor shall have the option to terminate the Contract or to agree to the reduced funding, within thirty (30) days of receipt of the proposed amendment.

6. Status of Contractor

The Contractor and its agents and employees are independent contractors performing construction services for the City and are not employees of the City. The Contractor and its agents and employees shall not accrue leave, retirement, insurance, bonding, use of City vehicles, or any other benefits afforded to employees of the City as a result of this Contract. The Contractor acknowledges that all sums received hereunder are reportable by the Contractor for tax purposes, including without limitation, self-employment and business income tax. The Contractor agrees not to purport to bind the City unless the Contractor has express written authority to do so, and then only within the strict limits of that authority.

7. Construction Contract Performance and Payment Bond

A. When a construction contract is awarded in excess of twenty-five thousand dollars ($25,000), the following bonds or security shall be delivered to the City and shall become binding on the parties upon the execution of the contract. If the Contractor fails to deliver the required performance and payment bonds, the Contractor's bid shall be rejected, its bid security shall be enforced to the extent of actual damages. Award of the contract shall be made pursuant to the Procurement Code in the following manner:

(1) a performance bond satisfactory to the City, executed by a surety company authorized to do business in this state and said surety to be approved in federal circular 570 as published by the United States treasury department or the state board of finance or the local governing authority, in an amount equal to one hundred percent of the price specified in the contract; and

(2) a payment bond satisfactory to the City, executed by a surety company authorized to do business in this state and said surety to be approved in federal circular 570 as published by the

United States treasury department or the state board of finance or the local governing authority, in an amount equal to one hundred percent of the price specified in the contract, for the protection of all persons supplying labor and material to the contractor or its subcontractors for the performance of the work provided for in the contract.

B. A subcontractor shall provide a performance and payment bond on a public works building project if the subcontractor's contract for work to be performed on a project is one hundred twenty-five thousand dollars ($125,000) or more.

8. Assignment

The Contractor shall not assign or transfer any interest in this Contract or assign any claims for money due or to become due under this Contract without the prior written approval of the City.

9. Subcontracting

The Contractor shall not subcontract any portion of the services to be performed under this Contract without the prior written approval of the City. No such subcontract shall relieve the primary Contractor from its obligations and liabilities under this Contract, nor shall any subcontract obligate direct payment from the City.

10. Release

Final payment of the amounts due under this Contract shall operate as a release of the City, its officers and employees from all liabilities, claims and obligations whatsoever arising from or under this Contract.

11. Confidentiality

Any confidential information provided to or developed by the Contractor in the performance of this Contract shall be kept confidential and shall not be made available to any individual or organization by the Contractor without the prior written approval of the City.

12. Product of Service -- Copyright

All materials developed or acquired by the Contractor under this Contract shall become the property of the City and shall be delivered to the City no later than the termination date of this Contract. Nothing developed or produced, in whole or in part, by the Contractor under this Contract shall be the subject of an application for copyright or other claim of ownership by or on behalf of the Contractor.

13. Conflict of Interest; Governmental Conduct Act

A. The Contractor represents and warrants that it presently has no interest and, during the term of this Contract, shall not acquire any interest, direct or indirect, which would conflict in any manner or degree with the performance or services required under the Contract.

B. The Contractor further represents and warrants that it has complied with, and, during the term of this Contract, will continue to comply with, and that this Contract complies with all applicable provisions of the Governmental Conduct Act, Chapter 10, Article 16 NMSA 1978.

C. Contractor’s representations and warranties in Paragraphs A and B of this Article 12 are material representations of fact upon which the City relied when this Contract was entered into by the parties. Contractor shall provide immediate written notice to the City if, at any time during the term of this Contract, Contractor learns that Contractor’s representations and warranties in Paragraphs A and B of this Article 12 were erroneous on the effective date of this Contract or have become erroneous by reason of

new or changed circumstances. If it is later determined that Contractor's representations and warranties in Paragraphs A and B of this Article 12 were erroneous on the effective date of this Contract or have become erroneous by reason of new or changed circumstances, in addition to other remedies available to the City and notwithstanding anything in the Contract to the contrary, the City may immediately terminate the Contract.

D. All terms defined in the Governmental Conduct Act have the same meaning in this section.

14. Amendment

A. This Contract shall not be altered, changed or amended except by instrument in writing executed by the parties hereto and all other required signatories.

B. If the City proposes an amendment to the Contract to unilaterally reduce funding due to budget or other considerations, the Contractor shall, within thirty (30) days of receipt of the proposed Amendment, have the option to terminate the Contract, pursuant to the termination provisions as set forth in Article 4 herein, or to agree to the reduced funding.

15. Change Orders

A. Changes. The Contractor may only make changes or revisions within the Scope of Work as defined by Article 1 and/or Exhibit 1 after receipt of written approval by the City Manager or his/her designee. Such change may only be made to Tasks or Sub-Task as defined in the Scope of Work. Under no circumstance shall such change affect the:

1) Deliverable requirements, as outlined in the Scope of Work;
2) Due date of any Deliverable, as outlined in the Scope of Work;
3) Compensation of any Deliverable, as outlined in the Scope of Work;
4) Contract compensation, as outlined in Article 2; or
5) Contract termination, as outlined in Article 4.

B. Change Request Process. In the event that circumstances warrant a change to accomplish the Scope of Work as described above, a Change Request shall be submitted that meets the following criteria:

1) The Project Manager shall draft a written Change Request for review and approval by the City Manager to include:
   (a) the name of the person requesting the change;
   (b) a summary of the required change;
   (c) the start date for the change;
   (d) the reason and necessity for change;
   (e) the elements to be altered; and
   (f) the impact of the change.

2. The City Manager shall provide a written decision on the Change Request to the Contractor within a maximum of ten (10) Business Days of receipt of the Change Request. All decisions made by the City Manager are final. Change Requests, once approved, become a part of the Contract, and become binding as a part of the original Contract.

16. Merger

This Contract incorporates all the agreements, covenants, and understandings between the parties hereto concerning the subject matter hereof, and all such covenants, agreements and understandings have been merged into this written contract.

No prior Agreement or understanding, oral or otherwise, of the parties or their agents shall be valid or enforceable unless embodied in this Contract.

17. Penalties for violation of law

NMSA 1978, sections 13-1-28 through 13-1-199, imposes civil and criminal penalties for its violation. In addition, the New Mexico criminal statutes impose felony penalties for illegal bribes, gratuities and kickbacks.

18. Equal Opportunity Compliance

The Contractor agrees to abide by all federal and state laws and rules and regulations, and Santa Fe City Code, pertaining to equal employment opportunity. In accordance with all such laws of the State of New Mexico, the Contractor assures that no person in the United States shall, on the grounds of race, religion, color, national origin, ancestry, sex, age, physical or mental handicap, or serious medical condition, spousal affiliation, sexual orientation or gender identity, be excluded from employment with or participation in, be denied the benefits of, or be otherwise subjected to discrimination under any program or activity performed under this Contract. If Contractor is found not to be in compliance with these requirements during the life of this Contract, Contractor agrees to take appropriate steps to correct these deficiencies.

19. Applicable Law

The laws of the State of New Mexico shall govern this Contract, without giving effect to its choice of law provisions. Venue shall be proper only in a New Mexico court of competent jurisdiction in accordance with NMSA 1978, section 38-3-2. By execution of this Contract, Contractor acknowledges and agrees to the jurisdiction of the courts of the State of New Mexico over any and all lawsuits arising under or out of any term of this Contract.

20. Workers Compensation

The Contractor agrees to comply with state laws and rules applicable to workers compensation benefits for its employees. If the Contractor fails to comply with the Workers Compensation Act and applicable rules when required to do so, this Contract may be terminated by the City.

21. Other Insurance

If the services contemplated under this Contract will be performed on or in City facilities or property, Contractor shall maintain in force during the entire term of this Contract, the following insurance coverage(s), naming the City as additional insured.

A. Commercial General Liability insurance shall be written on an occurrence basis and be a broad as ISO Form CG 00 01 with limits not less than $2,000,000 per occurrence and $2,000,000 in the aggregate for claims against bodily injury, personal and advertising injury, and property damage. Said policy shall include broad form Contractual Liability coverage and be endorsed to name the City of Santa Fe their officials, officers, employees, and agents as additional insureds.

B. Business Automobile Liability insurance for all owned, non-owned automobiles, with a combined single limit not less than $1,000,000 per accident.

C. Broader Coverage and Limits. The insurance requirements under this Contract shall be the greater of (1) the minimum coverage and limits specified in this Contract, or (2) the broader coverage and maximum limits of coverage of any insurance policy or proceeds available to the Named Insured. It is agreed that these insurance requirements shall not in any way act to reduce coverage that is broader or that includes higher limits than the minimums required herein. No representation is made that the minimum insurance requirements of this Contract are sufficient to cover the obligations of Contractor hereunder.

D. Contractor shall maintain the above insurance for the term of this Contract and name the City as an additional insured and provide for 30 days cancellation notice on any Certificate of Insurance form furnished by Contractor. Such certificate shall also specifically state the coverage provided under the policy is primary over any other valid and collectible insurance and provide a waiver of subrogation.

22. Records and Financial Audit

The Contractor shall maintain detailed time and expenditure records that indicate the date; time, nature and cost of services rendered during the Contract's term and effect and retain them for a period of three (3) years from the date of final payment under this Contract. The records shall be subject to inspection by the City. The City shall have the right to audit billings both before and after payment. Payment under this Contract shall not foreclose the right of the City to recover excessive or illegal payments

23. Indemnification

The Contractor shall defend, indemnify and hold harmless the City from all actions, proceeding, claims, demands, costs, damages, attorneys' fees and all other liabilities and expenses of any kind from any source which may arise out of the performance of this Contract, caused by the negligent act or failure to act of the Contractor, its officers, employees, servants, subcontractors or agents, or if caused by the actions of any client of the Contractor resulting in injury or damage to persons or property during the time when the Contractor or any officer, agent, employee, servant or subcontractor thereof has or is performing services pursuant to this Contract. In the event that any action, suit or proceeding related to the services performed by the Contractor or any officer, agent, employee, servant or subcontractor under this Contract is brought against the Contractor, the Contractor shall, as soon as practicable but no later than two (2) days after it receives notice thereof, notify the legal counsel of the City.

24. New Mexico Tort Claims Act

Any liability incurred by the City of Santa Fe in connection with this Contract is subject to the immunities and limitations of the New Mexico Tort Claims Act, Section 41-4-1, et. seq. NMSA 1978, as amended. The City and its "public employees" as defined in the New Mexico Tort Claims Act, do not waive sovereign immunity, do not waive any defense and do not waive any limitation of liability pursuant to law. No provision in this Contract modifies or waives any provision of the New Mexico Tort Claims Act.

25. Invalid Term or Condition

If any term or condition of this Contract shall be held invalid or unenforceable, the remainder of this

Contract shall not be affected and shall be valid and enforceable.

26. Enforcement of Contract

A party's failure to require strict performance of any provision of this Contract shall not waive or diminish that party's right thereafter to demand strict compliance with that or any other provision. No waiver by a party of any of its rights under this Contract shall be effective unless express and in writing, and no effective waiver by a party of any of its rights shall be effective to waive any other rights.

27. Notices

Any notice required to be given to either party by this Contract shall be in writing and shall be delivered in person, by courier service or by U.S. mail, either first class or certified, return receipt requested, postage prepaid, as follows:

To the City: P. Fred Heerbrandt, P.E.
73 Paseo Real
Santa Fe, NM 87507
pfheerbrandt@santafenm.gov

To the Contractor: Brent Costlow
44 Coyote Mountain Road
Santa Fe, NM 87505
Brent@ske1.net

28. Authority

If Contractor is other than a natural person, the individual(s) signing this Contract on behalf of Contractor represents and warrants that he or she has the power and authority to bind Contractor, and that no further action, resolution, or approval from Contractor is necessary to enter into a binding contract.

29. Progress Payments

Based upon Application for Payment submitted to the City by the Contractor and Certificates for Payment issued by the City, the City shall make progress payments on account of the Contract sum to the Contractor as provided in the Contract documents for the period ending the last day of the month as follows:

Not later than twenty-one (21) days following the end of the period covered by the Application for Payment, one hundred percent (100%) of the portion of the Contract Sum properly allocable to labor, materials, and equipment incorporated in the work and one hundred percent (100%) of the portion of the Contract sum properly allocable to materials and equipment suitably stored at the site or some other location agreed upon in writing for the period covered by the Application for Payment, less the aggregate of previous payments made by the City; and upon substantial completion of the entire work, a sum sufficient to increase the total payments to one hundred percent (100%) of the Contract sum, less such amounts as the City shall determine for all incomplete work and unsettled claims as provided in the Contract documents.

30. Final Payment

Final payment, constituting the entire unpaid balance of the Contract sum, unless it is a disputed payment, shall be paid by the City to the Contractor within twenty-one (21) calendar days, after all deficiencies to the Contract document that were noted during the Substantial Completion Inspection and listed on the attachment to

the Certificate of Substantial Completion have been corrected, and provided the Contract has been fully performed and a final Certificate for Payment has been issued by the City. In addition, the Contractor shall provide to the City a certified statement of Release of Lien (AIA Document G706A or approved form), Consent of Surety, Warranty from Prime Contractor, Warranties from Suppliers and Manufacturers, training sessions, equipment/operating manuals, and as-built drawings.

31. Schedule

The Contractor shall, within five (5) days after the effective date of Notice to Proceed, prepare and submit a progress schedule covering project operations for the 30-day Contract period. This progress schedule shall be of the type generally referred to as a Critical Path Method (CPM), Critical Path Schedule (CPS), and Critical Path Analysis (CPA), and other similar designations. The CPM shall be used to control the timing and sequences of the project. All work shall be done in accordance with the CPM Planning and Scheduling. A written statement of explanation shall be submitted with the progress schedule. All costs incurred by the contractor to implement the CPM shall be borne by the Contractor and are part of their Contract.

32. General and Special Provisions

A. Terms used in this Contract which are defined in the Conditions of the Contract shall have the meanings designated in those Conditions.

B. An enumeration of the Contractor's General Comprehensive Liability Insurance requirements appears in the General Conditions of the Contract for construction. Insurance requirements are also described in the Instructions to the Bidder section of the Project Manual. Contractor shall maintain adequate insurance in at least the maximum amounts, which the City could be liable under the New Mexico Tort Claims Act and shall provide proof of such insurance coverage to the City. It is the sole responsibility of the Contractor to comply with the law.

C. This Contract shall not become effective until: (1) approved by the Governing Body; and (2) signed by all parties required to sign this Contract.

D. The Contractor shall maintain detailed time records which indicate the date, time and nature of services rendered. These records shall be subject to inspection by the City, the Department of Finance and Administration and the State Auditor. The City shall have the right to audit billings both before and after payment. Payment under this Contract shall not foreclose the right of the City to recover excessive illegal payments.

E. The Contractor warrants that the Contractor presently has no interest and shall not acquire any interest, direct or indirect, which would conflict in any manner or degree with the performance or services required under this Contract.

F. The Contractor hereby warrants that the Contractor complies with the Americans with Disabilities Act, 29 CFR 1630.

G. Gender, Singular/Plural. Words of any gender used in this Contract shall be held and construed to include any other gender, and words in the singular number shall be held to include the plural, unless the context otherwise requires.

H. Captions and Section Headings. The captions and section headings contained in this Contract are for convenience of reference only, and in no way limit, define, or enlarge the terms, scope, and conditions of this Contract.

I. Certificates and Documents Incorporated. All certificates and documentation required by the provisions of the Contract shall be attached to this Contract at the time of execution and are hereby incorporated by reference as though set forth in full in this Contract to the extent they are consistent with its conditions and terms.

J. Separability. If any clause or provision of this Contract is illegal, invalid or unenforceable under present or future laws effective during the term of this Contract, then and in that event, it is the intention of the parties hereto that the remainder of this Contract shall not be affected thereby.

K. Words and Phrases. Words, phrases, and abbreviations, which have well-known technical or trade meanings used in the Contract documents shall be used according to such recognized meaning. In the event of a conflict, the more stringent meaning shall govern.

L. Relationship of Contract Documents. The Contract Documents are complementary, and any requirement of one Contract Document shall be as binding as if required by all.

M. Pursuant to NMSA 1978, section 13-1-191, reference is hereby made to the Criminal Laws of New Mexico (including NMSA 1978, sections 30-14-1, 30-24-2, and 30-41-1 through 30-41-3) which prohibit bribes, kickbacks, and gratuities, violation of which constitutes a felony. Further, the Procurement Code (NMSA 1978, sections 13-1-28 through 13-1-199) imposes civil and criminal penalties for its violation.

N. Pursuant to NMSA 1978, section 13-4-11. Reference is hereby made to the Minimum Wage on Public Works; weekly payments; posting wage scale; withholding funds.

IN WITNESS WHEREOF, the Parties have executed this Contract as of the date of the signature by the required approval authorities below.

CITY OF SANTA FE:

_____
ALAN WEBBER, MAYOR

DATE: _____

CONTRACTOR:
SKE Contractors, LLC

Karl Eberhart
Karl Eberhart (Oct 15, 2024 15:20 CDT)
KARL EBERHADT, PRESIDENT

DATE: Oct 15, 2024

City of SF Business License #: 238295

ATTEST:

_____
GERALYN CARDENAS, INTERIM CITY CLERK

CITY ATTORNEY'S OFFICE:

Marcos Martinez
Marcos Martinez (Oct 15, 2024 14:23 MDT)
_____
SENIOR ASSISTANT CITY ATTORNEY

APPROVED FOR FINANCES:

Emily K. Oster
_____
FINANCE DIRECTOR

Calle Mejia Sewer Pipe Bursting Project
Proposal for Sanitary Sewer Pipe-bursting Project
SKE Project Number: NM001-2024
8/28/2024

ITEM #	UNIT	DESCRIPTION	EST. QUANTITY	UNIT PRICE	TOTAL PRICE
1	EA	Mobilization - CCTV (Pre/Post TV)	2	$ 8,500.00	$ 17,000.00
2	EA	Mobilization - Pipe Bursting	1	$ 51,000.00	$ 51,000.00
3	EA	Mobilization - CIPP/MH Rehab	1	$ 100,000.00	$ 100,000.00
4	WK	Traffic Control	14	$ 7,400.00	$ 103,600.00
5	LS	Bonds and Insurance	1	$ 130,000.00	$ 130,000.00
6	LF	Pre-TV and Clean Existing 10" Line	3735	$ 7.50	$ 28,012.50
7	LF	Post TV 12" Rehabilitated Lines	3735	$ 5.00	$ 18,675.00
8	HR	Extra cleaning for obstruction removal (4hr min)	12	$ 675.00	$ 8,100.00
9	LF	Pipe burst existingg 10" sanitary sewer to 12.75" OD SDR 17 HDPE, up to 12 ft deep	3735	$ 290.00	$ 1,083,150.00
10	EA	San Swr Lateral reconnection of 4" to 6" PVC (SDR35) to main using PVC saddle, includes up to 5 LF of lateral, 0-10 ft deep	6	$ 3,000.00	$ 18,000.00
11	LF	Extra length San Swr lateral 4" to 6" (SDR 35 or SCH 40, 0-10 ft deep	150	$ 115.00	$ 17,250.00
12	EA	San Swr cleanouts for laterals (SDR 35 or SCH 40, no box	6	$ 700.00	$ 4,200.00
13	EA	Obstruction removal, 0-10 ft deep	12	$ 1,300.00	$ 15,600.00
14	EA	Obstruction removal, up to 15 ft deep	2	$ 3,200.00	$ 6,400.00
15	LS	Trench safety	1	$ 33,750.00	$ 33,750.00
16	WK	Bypass pumping with flow control	12	$ 10,800.00	$ 129,600.00
17	CY	Flowable fill (If required)	10	$ 500.00	$ 5,000.00
18	TON	Select fill (If required)	40	$ 140.00	$ 5,600.00
19	LF	10" UV Cured CIPP (4.375 MM	1729	$ 220.00	$ 380,380.00
20	EA	CIPP Bypass setup	7	$ 14,500.00	$ 101,500.00
21	EA	Internal service reinstatement	25	$ 1,900.00	$ 47,500.00
22	LF	CIPP clean and TV for liner prep	1729	$ 40.00	$ 69,160.00
23	LF	Post TV liner inspection	1729	$ 9.50	$ 16,425.50
24	EA	Bench and Invert of all manholes	22	$ 3,900.00	$ 85,800.00
25	SF	1" Cementitious grout all manholes	2927	$ 60.00	$ 175,620.00
26	SF	Manhole Spraywall epoxy liner (300 MILS)	2927	$ 65.00	$ 190,255.00
27	GAL	Chemical grout as nneded	50	$ 800.00	$ 40,000.00
28	EA	Point repair, up to 10ft deep	2	$ 5,500.00	$ 11,000.00
29	EA	Pont repair, up to 15ft deep	2	$ 8,000.00	$ 16,000.00
30	SY	City Street replacement, with laydown machine, Virgin asphalt	100	$ 101.00	$ 10,100.00
31	SY	City Street replacement, w/o laydown machine, Virgin asphalt	100	$ 101.00	$ 10,100.00
32	SY	Replace City Street pavement with temporary cold patch	50	$ 95.00	$ 4,750.00
		TOTAL BASE BID			**$ 2,933,528.00**

EXHIBIT A

ITEM #	UNIT	DESCRIPTION	EST. QUANTITY				
EX1	CY	Rock excavation	20	$	295.00	$	5,900.00
EX2	CY	Spoil haul-off	20	$	2,500.00	$	50,000.00
EX3	SF	Site restoration, if needed (landscape vegitation)	50	$	135.00	$	6,750.00
EX4	LF	Waterline relocation, 2" to 10" PVC	100	$	84.00	$	8,400.00
EX5	LS	Archeological required Mob/Demob	1	$	1,400.00	$	1,400.00
EX5	HR	Archeological required delay	12	$	350.00	$	4,200.00
EX6	CY	Exploratory excavation	200	$	85.00	$	17,000.00
		TOTAL EXTRA ITEMS BID				**$**	**93,650.00**

TOTAL BASE BID + EXTRA ITEMS	**$ 3,027,178.00**

CERTIFICATE OF LIABILITY INSURANCE

DATE (MM/DD/YYYY): 7/23/2024

THIS CERTIFICATE IS ISSUED AS A MATTER OF INFORMATION ONLY AND CONFERS NO RIGHTS UPON THE CERTIFICATE HOLDER. THIS CERTIFICATE DOES NOT AFFIRMATIVELY OR NEGATIVELY AMEND, EXTEND OR ALTER THE COVERAGE AFFORDED BY THE POLICIES BELOW. THIS CERTIFICATE OF INSURANCE DOES NOT CONSTITUTE A CONTRACT BETWEEN THE ISSUING INSURER(S), AUTHORIZED REPRESENTATIVE OR PRODUCER, AND THE CERTIFICATE HOLDER.

IMPORTANT: If the certificate holder is an ADDITIONAL INSURED, the policy(ies) must have ADDITIONAL INSURED provisions or be endorsed. If SUBROGATION IS WAIVED, subject to the terms and conditions of the policy, certain policies may require an endorsement. A statement on this certificate does not confer rights to the certificate holder in lieu of such endorsement(s).

PRODUCER Higginbotham Insurance Agency, Inc. 1400 FM 528, Suite F Webster TX 77598	**CONTACT NAME:** Sarah Sowinski **PHONE (A/C, No, Ext):** 281-990-6051 **FAX (A/C, No):** 281-990-6052 **E-MAIL ADDRESS:** ssowinski@Higginbotham.com
	INSURER(S) AFFORDING COVERAGE / **NAIC #**
	INSURER A : State Automobile Mutual Insurance Company / 25135
INSURED SKECO SKE Contractors, LLC P.O. Box 1111 Cypress TX 77410	**INSURER B :** **INSURER C :** **INSURER D :** **INSURER E :** **INSURER F :**

COVERAGES **CERTIFICATE NUMBER:** 535747730 **REVISION NUMBER:**

THIS IS TO CERTIFY THAT THE POLICIES OF INSURANCE LISTED BELOW HAVE BEEN ISSUED TO THE INSURED NAMED ABOVE FOR THE POLICY PERIOD INDICATED. NOTWITHSTANDING ANY REQUIREMENT, TERM OR CONDITION OF ANY CONTRACT OR OTHER DOCUMENT WITH RESPECT TO WHICH THIS CERTIFICATE MAY BE ISSUED OR MAY PERTAIN, THE INSURANCE AFFORDED BY THE POLICIES DESCRIBED HEREIN IS SUBJECT TO ALL THE TERMS, EXCLUSIONS AND CONDITIONS OF SUCH POLICIES. LIMITS SHOWN MAY HAVE BEEN REDUCED BY PAID CLAIMS.

INSR LTR	TYPE OF INSURANCE	ADDL INSD	SUBR WVD	POLICY NUMBER	POLICY EFF (MM/DD/YYYY)	POLICY EXP (MM/DD/YYYY)	LIMITS	
A	X **COMMERCIAL GENERAL LIABILITY** CLAIMS-MADE X OCCUR GEN'L AGGREGATE LIMIT APPLIES PER: POLICY X PRO-JECT LOC OTHER:			10072588CP	5/1/2024	5/1/2025	EACH OCCURRENCE DAMAGE TO RENTED PREMISES (Ea occurrence) MED EXP (Any one person) PERSONAL & ADV INJURY GENERAL AGGREGATE PRODUCTS - COMP/OP AGG	$ 1,000,000 $ 100,000 $ 5,000 $ 1,000,000 $ 2,000,000 $ 2,000,000
A	**AUTOMOBILE LIABILITY** X ANY AUTO OWNED AUTOS ONLY / SCHEDULED AUTOS X HIRED AUTOS ONLY / X NON-OWNED AUTOS ONLY			10072635CA	5/1/2024	5/1/2025	COMBINED SINGLE LIMIT (Ea accident) BODILY INJURY (Per person) BODILY INJURY (Per accident) PROPERTY DAMAGE (Per accident)	$ 1,000,000 $ $ $
	UMBRELLA LIAB OCCUR **EXCESS LIAB** CLAIMS-MADE DED RETENTION $						EACH OCCURRENCE AGGREGATE	$ $
	WORKERS COMPENSATION AND EMPLOYERS' LIABILITY Y / N ANYPROPRIETOR/PARTNER/EXECUTIVE OFFICER/MEMBER EXCLUDED? **(Mandatory in NH)** If yes, describe under DESCRIPTION OF OPERATIONS below	N / A					PER STATUTE / OTH-ER E.L. EACH ACCIDENT E.L. DISEASE - EA EMPLOYEE E.L. DISEASE - POLICY LIMIT	 $ $ $
A	Inland Marine			10072588CP	5/1/2024	5/1/2025	Scheduled Equip. Rented/Leased Equip. Deductible	On File $250,000 $1,000

DESCRIPTION OF OPERATIONS / LOCATIONS / VEHICLES (ACORD 101, Additional Remarks Schedule, may be attached if more space is required)

The General Liability and Automobile Liability policies include a blanket automatic additional insured endorsement that provides additional insured status and General Liability and Automobile Liability policies include a blanket waiver of subrogation endorsement to the certificate holder only when there is a written contract between the named insured and the certificate holder that requires such status.

The General Liability and Automobile Liability policies have a blanket Primary & Non Contributory endorsement that affords that coverage to certificate holders only where there is a written contract between the Named Insured and the certificate holder that requires such status.

CERTIFICATE HOLDER

City of Santa Fe
200 Lincoln Avenue
Santa Fe NM 87501

CANCELLATION

SHOULD ANY OF THE ABOVE DESCRIBED POLICIES BE CANCELLED BEFORE THE EXPIRATION DATE THEREOF, NOTICE WILL BE DELIVERED IN ACCORDANCE WITH THE POLICY PROVISIONS.

AUTHORIZED REPRESENTATIVE

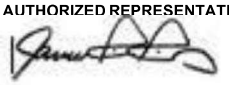

© 1988-2015 ACORD CORPORATION. All rights reserved.

City of Santa Fe

Treasury Department
200 Lincoln Ave.
Santa Fe, New Mexico 87504-0909
505-955-6551

BUSINESS REGISTRATION

Business Name: SKE Contractors, LLC

Business Location: 44 Coyote Mountain Rd RD
Santa Fe, NM 87505

CRS Number: 03-659053-00-3

Owner:

License Number: 238295

License Type: Business License - Renewable

Issued Date: September 18, 2024

Classification: Out of Jurisdiction Contractor - Genera

Expiration Date: September 18, 2025

Fees Paid: $10.00

SKE Contractors, LLC

THIS IS NOT A CONSTRUCTION PERMIT OR SIGN PERMIT. APPROPRIATE PERMITS MUST BE OBTAINED FROM THE CITY OF SANTA FE BUILDING PERMIT DIVISION PRIOR TO COMMENCEMENT OF ANY CONSTRUCTION OR THE INSTALLATION OF ANY EXTERIOR SIGN.

THIS REGISTRATION/LICENSE IS NOT TRANSFERRABLE TO OTHER BUSINESSES OR PREMISES.

TO BE POSTED IN A CONSPICUOUS PLACE

Calle Mejia ED Packet

Final Audit Report 2024-10-01

Created:	2024-09-27
By:	Kristy Miera (kamiera@santafenm.gov)
Status:	Signed
Transaction ID:	CBJCHBCAABAA4FLzxfgXREVt33wG49eVIwuxWqbDpz-4

"Calle Mejia ED Packet" History

Document created by Kristy Miera (kamiera@santafenm.gov)
2024-09-27 - 5:40:46 PM GMT- IP address: 63.232.20.2

Document emailed to Travis Dutton-Leyda (tkduttonleyda@santafenm.gov) for signature
2024-09-27 - 5:57:47 PM GMT

Email viewed by Travis Dutton-Leyda (tkduttonleyda@santafenm.gov)
2024-09-27 - 8:52:11 PM GMT- IP address: 63.232.20.2

Document e-signed by Travis Dutton-Leyda (tkduttonleyda@santafenm.gov)
Signature Date: 2024-09-27 - 9:02:59 PM GMT - Time Source: server- IP address: 63.232.20.2

Document emailed to John Dupuis (jedupuis@santafenm.gov) for signature
2024-09-27 - 9:03:01 PM GMT

Email viewed by John Dupuis (jedupuis@santafenm.gov)
2024-09-27 - 11:12:41 PM GMT- IP address: 104.47.64.254

Document e-signed by John Dupuis (jedupuis@santafenm.gov)
Signature Date: 2024-09-27 - 11:12:52 PM GMT - Time Source: server- IP address: 63.232.20.2

Document emailed to Erin McSherry (ekmcsherry@santafenm.gov) for signature
2024-09-27 - 11:12:54 PM GMT

Email viewed by Erin McSherry (ekmcsherry@santafenm.gov)
2024-09-28 - 0:00:00 AM GMT- IP address: 104.47.65.254

Document e-signed by Erin McSherry (ekmcsherry@santafenm.gov)
Signature Date: 2024-09-28 - 0:01:37 AM GMT - Time Source: server- IP address: 63.232.20.2

Document emailed to EMILY OSTER (ekoster@santafenm.gov) for signature
2024-09-28 - 0:01:39 AM GMT

Email viewed by EMILY OSTER (ekoster@santafenm.gov)

2024-10-01 - 7:01:49 PM GMT- IP address: 104.47.64.254

Document e-signed by EMILY OSTER (ekoster@santafenm.gov)

Signature Date: 2024-10-01 - 7:06:28 PM GMT - Time Source: server- IP address: 63.232.20.2

Agreement completed.

2024-10-01 - 7:06:28 PM GMT

Signature: P. Fred Heerbrandt, P.E.

Email: pfheerbrandt@ci.santa-fe.nm.us

City of Santa Fe, New Mexico

memo

Date: October 29, 2024

To: Public Works and Utilities Committee / Finance Committee / City Council

Via: John Dupuis, Public Utilities Department Director JD
Jesse D. Roach, Water Division Director JR

From: Bill Huey, Water Division Engineer BH

Subject: Request for Approval of Amendment No. 2 to Price Agreement #21-0378 with Sub Surface Contracting, Inc. to Increase Maximum Compensation by $542,187.50 for a New Total Contract Amount of $1,626,562.50 including NMGRT. (Bill Huey, Engineer, bchuey@santafenm.gov).

Vendor Name: Sub Surface Contracting, Inc.

Vendor Number: 1921

Contract Number: 3202777

ITEM AND ISSUE:

The Public Utilities Department Water Division requests approval of Amendment No. 2 to Price Agreement #21-0378 with Sub Surface Contracting, Inc. (Sub Surface) to Increase Maximum Compensation by $542,187.50 for a New Total Contract Amount of $1,626,562.50 including New Mexico Gross Receipt Tax (NMGRT) with No Corresponding Change to the Term of the Agreement. (Bill Huey, Engineer, bchuey@santafenm.gov).

ACTION REQUESTED:

Approval of Amendment No. 2 to Price Agreement #21-0378

BACKGROUND AND SUMMARY:

The City Wide Water Utility Construction Contract is a multi-contractor on-call requirements contract, with the Water Division issuing work orders as needed for work such as water line replacements, and emergency repairs. In July 2021, the Governing Body approved ITB No. '21/37/B for $250,000.00 plus NMGRT per year for each of the two contractors, Sub Surface and A.A.C. Construction LLC. Due to Supply Chain delays, $467,000.00 in orders from Sub Surface on the previous contract were delayed until after this contract was in effect and were paid under this contract. Current contract possible funding is limited to $29,713.52 without approval of Amendment #3.

This is a multi-contractor award ITB to set the applicable Bid Items for future work. Future work will be assigned under fully signed Work Orders for planned work on will be followed with a signed Work Order

for Emergency repair. The exact type of work required will be used to select from the applicable Bid Items.

PROCUREMENT METHOD:

ITB No. '21/37/B FY 21/22 City Wide Water Utility Construction & Repair Price Agreement, CIP # 3057 approved by City Council on 7/28/2021.

Chief Procurement Officer Approval: _____ **Date:** Nov 12, 2024
Comment/Exceptions: _____

Supporting Information:

CONTRACT NUMBER:
The FY25 Munis contract number is 3202777
The FY25 Project ledger number for City Wide Construction is WTR2550504
$$$$$ SOURCE/REVENUE: ☒Expense ☐Revenue

The funding source is:
Fund Name/Number: Water Enterprise Fund 505
Munis Org Name/Number: Water CIP/5050395
Munis Object Name/Number: WIP Construction/572970

If the project is grant funded? List grant award number: _____

Grant Manager / Accounting Officer Approval: _____ **Date:** _____
Comment/Exceptions: _____

Project Ledger #: _____

Budget Officer Approval: ALEXIS LOTERO (Nov 12, 2024 10:42 MST) **Date:** Nov 12, 2024
Comment/Exceptions: _____

CAPITAL ASSET (will this procurement result in a tangible item that costs more than $5,000?):

☒Yes | ☐ No

 # (if known): _____

Repair or Replacement of Existing Equipment:

☒Yes | ☐ No
If yes -> ☒Repair | ☒ Replacement

Please explain: Contract is used for water line main break emergency repairs and replacements.

Capital Project:
(New and improvement projects that are going to cost $10,000 or more)
☒ Yes | ☐ No

Project Ledger #: _____

Anticipated length of project: To be determined

Asset Manager Approval: Lisa Storey (Nov 12, 2024 10:53 MST) **Date:** Nov 12, 2024
Comment/Exceptions: Nov 12, 2024

Department Approvals:
IT Components: ☐ **Yes |** ☒ **No**
Vehicles: ☐ **Yes |** ☒ **No**
Facilities, Furniture, Fixtures, Equipment: ☐ **Yes |** ☒ **No**

Approval: _____ **Title:** _____ **Date**: _____
Approval: _____ **Title:** _____ **Date**: _____
Comment & Exceptions: _____

Department Contract Administrator Contact Info:

Gina Wolff
vawolff@santafenm.gov
505-955-4271

ATTACHMENTS:

Amendment No. 2
Budget Amendment Request (BAR)

cc:

Item#_____
Munis Contract# 3202777
Original Contract Item#_21-0378
CIP # 3057

CITY OF SANTA FE
AMENDMENT No.2
TO
PRICE AGREEMENT# 21-0378

This AMENDMENT No. 2 (the "Amendment") amends the CITY OF SANTA FE PRICE AGREEMENT, dated July 28, 2021 (the "Agreement"), between the City of Santa Fe (the "City") and Sub Surface Contracting, Inc. (the "Contractor"). The date of this Amendment shall be the date when it is executed by the City and the Contractor whichever occurs last.

RECITALS

A. Under the terms of the Agreement, Contractor has agreed to provide On-Call Construction Services for City Wide Utility Construction & Repair for the City of Santa Fe.

B. Pursuant to Article 14 of the Agreement, and for good and valuable consideration, the receipt and sufficiency of which are acknowledged by the parties, the City and the Contractor agree as follows:

1. COMPENSATION.

Article 2, paragraph A of the Agreement is amended to add five hundred forty-two thousand one hundred eighty-seven dollars and fifty cents ($542,187.50), inclusive of New Mexico Gross Receipts Tax (NMGRT), so that Article 2, paragraph A reads in its entirety as follows:

> The City shall pay to the Contractor in full payment for services satisfactorily performed BASED UPON THE ATTACHED PRICE SHEETS, such compensation not to exceed one million dollars ($1,626,563.50) including NMGRT for a total of four (4) years. **The total amount payable to the Contractor under this Agreement, including gross receipts tax and expenses, shall not exceed one million six hundred twenty-six thousand five hundred and sixty-three dollars and fifty**

cents ($1,626,563.50). This amount is a maximum and not a guarantee that the **work** assigned to be performed by Contractor under this Agreement shall equal the amount stated herein. The parties do not intend for the Contractor to continue to provide services without compensation when the total compensation amount is reached. Contractor is responsible for notifying the City when the services provided under this Agreement reach the total compensation amount. In no event will the Contractor be paid for services provided in excess of the total compensation amount without this Agreement being amended in writing prior to those services in excess of the total compensation amount being provided.

2. AGREEMENT IN FULL FORCE.

Except as specifically provided in this Amendment, the Agreement remains and shall remain in full force and effect, in accordance with its terms.

IN WITNESS WHEREOF, the parties have executed this Amendment No. 2 to the Contract as of the dates set forth below.

CITY OF SANTA FE:

_____
ALAN WEBBER, MAYOR

Date: _____

ATTEST:

_____
CITY CLERK

CONTRACTOR:
SUB SURFACE CONTRACTING, INC.

_____
JEREMY SANDERSON, VICE PRESIDENT
Date: 11/8/24

CRS # 02104256000

CITY ATTORNEY'S OFFICE:

Marcos Martinez
Marcos Martinez (Nov 8, 2024 13:10 MST)
SENIOR ASSISTANT CITY ATTORNEY

APPROVED FOR FINANCES:

Emily K. Oster
EMILY OSTER, FINANCE DIRECTOR

	Sub Surface		
Bid Item	**Article and Description**	**Unit**	**Unit Price**
Construction Items			
5	2" PVC Water Main, cip, all lengths	LF	$ 30.00
10	4" PVC Water Main, cip, <100'	LF	$ 36.00
15	4" PVC Water Main, cip, >100'	LF	$ 34.00
20	6" PVC Water Main, cip, <100'	LF	$ 42.00
25	6" PVC Water Main, cip, >100'	LF	$ 39.00
30	8" PVC Water Main, cip, <100'	LF	$ 48.00
35	8" PVC Water Main, cip, >100'	LF	$ 45.50
40	10" PVC Water Main, cip, <100'	LF	$ 52.00
45	10" PVC Water Main, cip, >100'	LF	$ 49.00
50	12" PVC Water Main, cip, <100'	LF	$ 66.75
55	12" PVC Water Main, cip, >100'	LF	$ 64.50
60	14" PVC Water Main, cip	LF	$ 79.00
65	16" PVC Water Main, cip	LF	$ 97.00
70	24" PVC Water Main, cip	LF	$ 100.00
75	2" DI Water Main, cip, all lengths	LF	$ -
80	4" DI Water Main, cip, <100'	LF	$ 57.50
85	4" DI Water Main, cip, >100'	LF	$ 56.00
90	6" DI Water Main, cip, <100'	LF	$ 53.00
95	6" DI Water Main, cip, >100'	LF	$ 51.00
100	8" DI Water Main, cip, <100'	LF	$ 60.25
105	8" DI Water Main, cip, >100'	LF	$ 58.00
110	10" DI Water Main, cip, <100'	LF	$ 65.00
115	10" DI Water Main, cip, >100'	LF	$ 63.00
120	12" DI Water Main, cip, <100'	LF	$ 78.00
125	12" DI Water Main, cip, >100'	LF	$ 74.00
130	14" DI Water Main, cip	LF	$ 87.00
135	16" DI Water Main, cip	LF	$ 101.00
140	24" DI Water Main, cip	LF	$ 159.00
145	Extra Pay for Trench Depth, 6'-8'	LF	$ 8.00
150	Extra Pay for Trench Depth, 8'-10'	LF	$ 12.00
155	Extra Pay for Trench Depth, 10'-14'	LF	$ 30.00
160	Rock Excavation	CY	$ 220.00
165	Exploratory Excavation (as SDCW Approved)	CY	$ 65.00
170	Imported Backfill (as SDCW Approved)	CY	$ 24.00
175	Fitting Installation	LB	$ 4.00
180	Fitting Insertion	LB	$ 34.00
185	4" Retainer Ring/ Bolt on Flange	EA	$ 75.00
190	6" Retainer Ring/ Bolt on Flange	EA	$ 105.00
195	8" Retainer Ring/ Bolt on Flange	EA	$ 119.00
200	10" Retainer Ring/ Bolt on Flange	EA	$ 121.00
205	12" Retainer Ring/ Bolt on Flange	EA	$ 145.00
210	14" Retainer Ring/ Bolt on Flange	EA	$ 179.00
215	16" Retainer Ring/ Bolt on Flange	EA	$ 285.00
220	4"Joint Harness	EA	$ 96.00
225	6" Joint Harness	EA	$ 130.00
230	8" Joint Harness	EA	$ 155.00

235	10" Joint Harness	EA	$ 160.00
240	12" Joint Harness	EA	$ 200.00
245	14" Joint Harness	EA	$ 375.00
250	16" Joint Harness	EA	$ 455.00
255	Concrete Thrust Blocking (as SDCW Approved)	CY	$ 355.00
260	Tapping Sleeve w/ Tap, 4" X 4"	EA	$ 1,400.00
265	Tapping Sleeve w/ Tap, 6" X 4" - 6"	EA	$ 1,600.00
270	Tapping Sleeve w/ Tap, 8" X 4" - 8"	EA	$ 1,800.00
275	Tapping Sleeve w/ Tap, 10" X 4" - 10"	EA	$ 2,100.00
280	Tapping Sleeve w/ Tap, 12" X 4" - 12"	EA	$ 2,300.00
285	Tapping Sleeve w/Tap, 20" X 4" - 20"	EA	$ 4,200.00
290	Non-Pressurized Connections, 2" line	EA	$ 2,500.00
295	Non-Pressurized Connections, 4"-10" line	EA	$ 3,675.00
300	Non-Pressurized Connections, 12"-20" line	EA	$ 4,100.00
305	2" CL125 Gate Valves, cip.	EA	$ 975.00
310	4" CL125 Gate Valves, cip.	EA	$ 1,050.00
315	6" CL125 Gate Valves, cip.	EA	$ 1,300.00
320	8" CL125 Gate Valves, cip.	EA	$ 1,825.00
325	10" CL125 Gate Valves, cip.	EA	$ 2,335.00
330	12" CL125 Gate Valves, cip.	EA	$ 2,800.00
335	2" CL250 Gate Valves, cip.	EA	$ 945.00
340	4" CL250 Gate Valves, cip.	EA	$ 1,925.00
345	6" CL250 Gate Valves, cip.	EA	$ 2,050.00
350	8" CL250 Gate Valves, cip.	EA	$ 2,950.00
355	10" CL250 Gate Valves, cip.	EA	$ 4,200.00
360	12" CL250 Gate Valves, cip.	EA	$ 4,625.00
365	16" CL250 Gate Valves, cip.	EA	$ 7,100.00
370	20" CL250 Gate Valves, cip.	EA	$ 16,190.00
375	24" CL250 Gate Valves, cip.	EA	$ 23,250.00
380	12" CL250 Butterfly Valves, cip.	EA	$ 2,800.00
385	16" CL250 Butterfly Valves, cip.	EA	$ 4,850.00
390	20" CL250 Butterfly Valves, cip.	EA	$ 6,700.00
395	24" CL250 Butterfly Valves, cip.	EA	$ 9,325.00
400	Fire Hydrant, 5' or less bury, cip.	EA	$ 3,125.00
405	Fire Hydrant Extension, 6" or 12" length	EA	$ 840.00
410	Fire Hydrant Extension, 18" or 24" length	EA	$ 1,225.00
415	Fire Hydrant Remove & Relay	EA	$ 800.00
420	Fire Hydrant Remove & Return	EA	$ 575.00
425	2 1/4" Flush Hydrant	EA	$ 1,565.00
430	2" Blow-Off Valve Installation	EA	$ 1,340.00
435	2" Pressure Relief Valve, cip.	EA	$ 6,830.00
440	3" Pressure Relief Valve, cip.	EA	$ 7,075.00
445	4" Pressure Relief Valve, cip.	EA	$ 8,195.00
450	6" Pressure Relief Valve, cip.	EA	$ 10,950.00
455	8" Pressure Relief Valve, cip.	EA	$ 15,525.00
460	12" Pressure Relief Valve, cip.	EA	$ 29,725.00
465	Air & Vacuum Release Valve, 1"	EA	$ 2,950.00
470	Air & Vacuum Release Valve, 2"	EA	$ 4,140.00
475	Install City of Santa Fe Furnished Valve/Meter, 2" - 4"	EA	$ 450.00
480	Install City of Santa Fe Furnished Valve/Meter, 6" - 8"	EA	$ 550.00

485	Install City of Santa Fe Furnished Valve/Meter, 10"-12"	EA	$ 750.00
490	Metered 2” Bypass – Vault Installation	EA	$ 3,185.00
495	Valve Box, cip.	EA	$ 825.00
500	Valve Box Replacement	EA	$ 975.00
505	Valve Box Removal of Existing	EA	$ 450.00
510	Valve Box Adjustment	EA	$ 625.00
515	Valve Stem Extension, 0’-4’ Depth	EA	$ 250.00
520	Precast 4' Diameter Pit w/ Lid Min. 4' Depth	VF	$ 4,000.00
525	Precast 6' Diameter Pit w/ Lid Min. 4' Depth	VF	$ 5,150.00
530	Precast 8' Diameter Pit w/ Lid Min. 4' Depth	VF	$ 6,200.00
535	Cast-In-Place RCP Vault w/ Lid	CY	$ 12,500.00
540	Prefabricated Vault, 4' X 8'	EA	$ 8,995.00
545	Native Seeding	ACRE	$ 2,275.00
550	Bollards (pair)	EA	$ 1,200.00
555	4" Steel Casing	LF	$ 95.00
560	4" PVC Casing	LF	$ 85.00
565	14" Steel Casing	LF	$ 225.00
570	16" Steel Casing	LF	$ 240.00
575	18" Steel Casing	LF	$ 275.00
580	22" Steel Casing	LF	$ 330.00
585	26" Steel Casing	LF	$ 400.00
590	28" Steel Casing	LF	$ 475.00
595	30" Steel Casing	LF	$ 425.00
600	36" Steel Casing	LF	$ 460.00
605	Bore & Jack Casing Pipe	DIA-IN- LF	$ 28.00
610	Open Cut Casing Pipe Installation, < 6' Deep	LF	$ 39.00
615	Asphalt Pavement Removal & Disposal, <2”	SY	$ 65.00
620	Asphalt Pavement Removal & Disposal, 2”-6”	SY	$ 65.00
625	Concrete Pavement Removal & Disposal, <2”	SY	$ 95.00
630	Concrete Pavement Removal & Disposal, 2”-6”	SY	$ 110.00
635	Concrete Curb and Gutter Removal & Disposal	LF	$ 29.00
640	Concrete Sidewalk Removal & Disposal	SY	$ 30.00
645	Replace City Street Pavement w/o Laydown Machine, Virgin Asphalt	SY	$ 75.00
650	Replace City Street Pavement w/o Laydown Machine, Recycled Asphalt	SY	$ 75.00
655	Replace City Street Pavement with Laydown Machine, Virgin Asphalt	SY	$ 265.00
660	Replace City Street Pavement with Laydown Machine, Recycled Asphalt	SY	$ 265.00
665	Replace City Street Pavement with Temporary Cold Mix	SY	$ 105.00
670	Replace Non-City Street Pavement w/o Laydown Machine, Virgin Asphalt	SY	$ 75.00
675	Replace Non-City Street Pavement w/o Laydown Machine, Recycled Asphalt	SY	$ 75.00
680	Replace Non-City Street Pavement with Laydown Machine, Virgin Asphalt	SY	$ 265.00
685	Replace Non-City Street Pavement with Laydown Machine, Recycled Asphalt	SY	$ 265.00
690	Replace Non-City Street Pavement with Temporary Cold Mix	SY	$ 105.00

695	Replace Concrete Pavement	SY	$ 290.00
700	Replace Concrete Curb & Gutter	LF	$ 45.00
705	Replace Concrete Sidewalk	SY	$ 190.00
710	Replace Gravel Surface, 0”-2”	CY	$ 55.00
715	Replace Gravel Surface, 2”-4”	CY	$ 65.00
720	Base course/Gravel (crushed or landscape), 0’-3”	SY	$ 35.00
725	Base course/Gravel (crushed or landscape), 3”-6”	SY	$ 45.00
730	Service, 3/4" Single, New Main	EA	$ 1,650.00
735	Service, 3/4" Double, New Main	EA	$ 1,975.00
740	Service, 1", New Main	EA	$ 1,825.00
745	Service, 1 1/2", New Main	EA	$ 3,590.00
750	Service, 2", New Main	EA	$ 3,970.00
755	Service, 3/4" Single, Existing Main	EA	$ 1,650.00
760	Service, 3/4" Double, Existing Main	EA	$ 1,975.00
765	Service, 1", Existing Main	EA	$ 1,825.00
770	Service, 1 1/2", Existing Main	EA	$ 3,590.00
775	Service, 2", Existing Main	EA	$ 3,950.00
780	Service Replacement, 3/4"	EA	$ 1,850.00
785	Service Replacement, Double, 3/4"	EA	$ 2,100.00
790	Service Replacement, 1”	EA	$ 1,950.00
795	Service Replacement, 1 1/2"	EA	$ 3,750.00
800	Service Replacement, 2”	EA	$ 4,125.00
805	Meter Box Relocation/Replacement, 3/4"	EA	$ 1,200.00
810	Meter Box Relocation/Replacement, 1”	EA	$ 1,400.00
815	Meter Box Relocation/Replacement, 1-1/2"	EA	$ 1,600.00
820	Meter Box Relocation/Replacement, 2”	EA	$ 1,600.00
825	Service Transfer, 3/4"	EA	$ 625.00
830	Service Transfer, 1”	EA	$ 725.00
835	Service Transfer, 1 1/2"	EA	$ 825.00
840	Service Transfer at Main, 2”	EA	$ 850.00
845	Retire Existing Service at Main, 3/4"- 2"	EA	$ 725.00
850	Retire Existing Meter Box & Setting	EA	$ 525.00
855	Adjust Meter Box To Grade	EA	$ 450.00
860	Service Saddle, 3/4" Tap, 4"-12" Main	EA	$ 650.00
865	Service Saddle, 1" Tap, 4"-12" Main	EA	$ 775.00
870	Service Saddle, 1 1/2" Tap, 4"-12" Main	EA	$ 950.00
875	Service Saddle, 2" Tap, 4"-12" Main	EA	$ 1,075.00
880	Service Tubing, 3/4"	LF	$ 33.50
885	Service Tubing, 1”	LF	$ 36.25
890	Service Tubing, 1 1/2"	LF	$ 44.00
895	Service Tubing, 2”	LF	$ 53.00
900	Air and Vacuum Valve (individual)	EA	$ 2,350.00
905	Air and Vacuum Valves	GROUP OF 10	$ 21,250.00
910	Automatic Flushing Valve	EA	$ 6,235.00
915	Materials Mark-Up Over Invoice	%	$ 20,000.00
920	Traffic Control Mark-Up Over Invoice	%	$ 8,000.00
925	Street-Cut Permits	Allow.	$ 375.00
930	Project Signs	EA	$ 450.00
935	Archeological Required Delay (after 2 hrs.)	HR	$ 375.00

940	Archeological Required Mob/Demob	LS	$ 450.00
EMERGENCY REPAIR			
9000	Supervisor's Truck with tools	HR	$ 35.00
9100	Backhoe/Skid Steer	HR	$ 58.00
9200	Compressor with tools	HR	$ 55.00
9300	Dump Truck	HR	$ 60.00
9400	Pump	HR	$ 30.00
9500	Laborer	HR	$ 43.00
9600	Pipe Fitter	HR	$ 45.00
9700	Equipment Operator	HR	$ 58.00
9800	Foreman	HR	$ 70.00
9900	Rental Items Mark-Up Over Invoice (multiply $5,000 x your % for Item Price)	%	$ 5,000.00
9950	Materials Mark-Up Over Invoice (multiply $20,000 x your 5 for Item Price)	%	$ 20,000.00

Tax Rate: **8.1875%**

Log # *{Finance use only}*:	
Journal # *{Finance use only}*:	

City of Santa Fe, New Mexico
BUDGET AMENDMENT RESOLUTION (BAR)

DEPARTMENT / DIVISION NAME	DATE
Public Utilities Department / Water Division	10/29/2024

ITEM DESCRIPTION	ORG	OBJECT	PROJECT	INCREASE	DECREASE
EXPENDITURES				*{enter as positive #}*	*{enter as negative #}*
Water Cap Proj, WIP Construction	5050395	572970	WTR2550504	542,188	
REVENUES				*{enter as negative #}*	*{enter as positive #}*
				$ 542,188	$ -

JUSTIFICATION: *(use additional page if needed)*
--Attach supporting documentation/memo

Please see attached Memo.

Contract (3202777) with Sub Surface Contracting Inc for city-wide water line emergency repairs and replacements

Amendment No. 2, Item No. 21-0378.

{Complete section below if BAR results in a net change to ANY Fund}

Fund(s) Affected	Fund Balance Increase/(Decrease)
505	(542,188)
TOTAL:	**(542,188)**

Jonna Leigh Stack for Bill Huey — 10/29/2024
Prepared By *{print name}* — Date

Division Director Signature *{optional}* — Date

John Dupuis (Nov 1, 2024 10:29 MDT)
Department Director Signature, John Dupuis — Date

{Use this form for Finance Committee/ City Council agenda items ONLY}

CITY COUNCIL APPROVAL

City Council Approval Date

Agenda Item #:

Budget Officer — Date

Finance Director *{≤ $5,000}* — Date

City Manager *{≤ $60,000}* — Date

CERTIFICATE OF LIABILITY INSURANCE

DATE (MM/DD/YYYY) 7/19/2024

THIS CERTIFICATE IS ISSUED AS A MATTER OF INFORMATION ONLY AND CONFERS NO RIGHTS UPON THE CERTIFICATE HOLDER. THIS CERTIFICATE DOES NOT AFFIRMATIVELY OR NEGATIVELY AMEND, EXTEND OR ALTER THE COVERAGE AFFORDED BY THE POLICIES BELOW. THIS CERTIFICATE OF INSURANCE DOES NOT CONSTITUTE A CONTRACT BETWEEN THE ISSUING INSURER(S), AUTHORIZED REPRESENTATIVE OR PRODUCER, AND THE CERTIFICATE HOLDER.

IMPORTANT: If the certificate holder is an ADDITIONAL INSURED, the policy(ies) must have ADDITIONAL INSURED provisions or be endorsed. If SUBROGATION IS WAIVED, subject to the terms and conditions of the policy, certain policies may require an endorsement. A statement on this certificate does not confer rights to the certificate holder in lieu of such endorsement(s).

PRODUCER License # 0757776 HUB International Insurance Services (SOW) 2905 Rodeo Park Drive East Building 6, Suite 100 Santa Fe, NM 87505	CONTACT NAME: Michelle Vialpando PHONE (A/C, No, Ext): (505) 992-1873 FAX (A/C, No): (866) 487-3972 E-MAIL ADDRESS: michelle.vialpando@hubinternational.com
INSURED Sub Surface Contracting Inc 27A Paseo De River St Santa Fe, NM 87507	INSURER(S) AFFORDING COVERAGE / NAIC # INSURER A : ACUITY, A Mutual Insurance Company 14184 INSURER B : Builders Trust of New Mexico INSURER C : INSURER D : INSURER E : INSURER F :

COVERAGES **CERTIFICATE NUMBER:** **REVISION NUMBER:**

THIS IS TO CERTIFY THAT THE POLICIES OF INSURANCE LISTED BELOW HAVE BEEN ISSUED TO THE INSURED NAMED ABOVE FOR THE POLICY PERIOD INDICATED. NOTWITHSTANDING ANY REQUIREMENT, TERM OR CONDITION OF ANY CONTRACT OR OTHER DOCUMENT WITH RESPECT TO WHICH THIS CERTIFICATE MAY BE ISSUED OR MAY PERTAIN, THE INSURANCE AFFORDED BY THE POLICIES DESCRIBED HEREIN IS SUBJECT TO ALL THE TERMS, EXCLUSIONS AND CONDITIONS OF SUCH POLICIES. LIMITS SHOWN MAY HAVE BEEN REDUCED BY PAID CLAIMS.

INSR LTR	TYPE OF INSURANCE	ADDL INSD	SUBR WVD	POLICY NUMBER	POLICY EFF (MM/DD/YYYY)	POLICY EXP (MM/DD/YYYY)	LIMITS	
A	X COMMERCIAL GENERAL LIABILITY CLAIMS-MADE X OCCUR X PD Ded: $500 GEN'L AGGREGATE LIMIT APPLIES PER: POLICY X PRO-JECT LOC OTHER:	X		Z75944	7/1/2024	7/1/2025	EACH OCCURRENCE DAMAGE TO RENTED PREMISES (Ea occurrence) MED EXP (Any one person) PERSONAL & ADV INJURY GENERAL AGGREGATE PRODUCTS - COMP/OP AGG	$ 1,000,000 $ 250,000 $ 10,000 $ 1,000,000 $ 3,000,000 $ 3,000,000
A	AUTOMOBILE LIABILITY X ANY AUTO OWNED AUTOS ONLY SCHEDULED AUTOS X HIRED AUTOS ONLY X NON-OWNED AUTOS ONLY			Z75944	7/1/2024	7/1/2025	COMBINED SINGLE LIMIT (Ea accident) BODILY INJURY (Per person) BODILY INJURY (Per accident) PROPERTY DAMAGE (Per accident)	$ 1,000,000 $ $ $
A	UMBRELLA LIAB X OCCUR X EXCESS LIAB CLAIMS-MADE DED X RETENTION $ 0			Z75944	7/1/2024	7/1/2025	EACH OCCURRENCE AGGREGATE	$ 2,000,000 $ 2,000,000
B	WORKERS COMPENSATION AND EMPLOYERS' LIABILITY ANY PROPRIETOR/PARTNER/EXECUTIVE OFFICER/MEMBER EXCLUDED? (Mandatory in NH) Y / N: Y If yes, describe under DESCRIPTION OF OPERATIONS below	N / A		0692	1/1/2024	1/1/2025	X PER STATUTE OTH-ER E.L. EACH ACCIDENT E.L. DISEASE - EA EMPLOYEE E.L. DISEASE - POLICY LIMIT	$ 2,000,000 $ 2,000,000 $ 2,000,000
A	Leased/Rented Eqpt			Z75944	7/1/2024	7/1/2025	Ded: $500 / Limit:	200,000

DESCRIPTION OF OPERATIONS / LOCATIONS / VEHICLES (ACORD 101, Additional Remarks Schedule, may be attached if more space is required)

.

SEE ATTACHED ACORD 101

CERTIFICATE HOLDER

City of Santa Fe
Wastewater Division
Attn: Stan Holland
73 Paseo Real
Santa Fe, NM 87507

CANCELLATION

SHOULD ANY OF THE ABOVE DESCRIBED POLICIES BE CANCELLED BEFORE THE EXPIRATION DATE THEREOF, NOTICE WILL BE DELIVERED IN ACCORDANCE WITH THE POLICY PROVISIONS.

AUTHORIZED REPRESENTATIVE

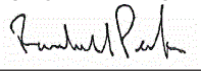

© 1988-2015 ACORD CORPORATION. All rights reserved.
The ACORD name and logo are registered marks of ACORD

AGENCY CUSTOMER ID: SUBSURF-01 DONISCHUK

LOC #: 1

ADDITIONAL REMARKS SCHEDULE

AGENCY	License # 0757776	NAMED INSURED
HUB International Insurance Services (SOW)		Sub Surface Contracting Inc 27A Paseo De River St Santa Fe, NM 87507
POLICY NUMBER		
SEE PAGE 1		
CARRIER	NAIC CODE	EFFECTIVE DATE: SEE PAGE 1
SEE PAGE 1	SEE P 1	

ADDITIONAL REMARKS

THIS ADDITIONAL REMARKS FORM IS A SCHEDULE TO ACORD FORM,

FORM NUMBER: ACORD 25 FORM TITLE: Certificate of Liability Insurance

Description of Operations/Locations/Vehicles:
Where required by written contract or agreement, the City of Santa Fe, Wastewater Division, City Representative, other parties reasonably requested in writing by the City of Santa Fe, and their officials, members, officers, employees, and agents are included as additional insured with respects to general liability, on a primary & non-contributory basis.

© 2008 ACORD CORPORATION. All rights reserved.
The ACORD name and logo are registered marks of ACORD

ADDITIONAL INSURED - OWNERS, LESSEES OR CONTRACTORS - AUTOMATIC STATUS WHEN REQUIRED IN CONSTRUCTION AGREEMENT WITH YOU **CG-2033R(6-13)**

This endorsement modifies insurance provided under the following:

COMMERCIAL GENERAL LIABILITY COVERAGE PART

1. Section II - Who Is An Insured is amended to include as an additional insured:

a. Any person or organization for whom you are performing operations when you and such person or organization have agreed in writing in a contract or agreement that such person or organization be added as an additional insured on your policy; and

b. Any other person or organization you are required to add as an additional insured under the contract or agreement described in paragraph a above.

Such person or organization is an additional insured only with respect to liability for *bodily injury, property damage* or *personal and advertising injury* caused, in whole or in part, by:

a. Your acts or omissions; or

b. The acts or omissions of those acting on your behalf;

in the performance of your ongoing operations for the additional insured.

However the insurance afforded to such additional insured:

a. Only applies to the extent permitted by law; and

b. Will not be broader than that which you are required by the contract or agreement to provide for such additional insured.

A person's or organization's status as an additional insured under this endorsement ends when your operations for that additional insured are completed.

2. With respect to the insurance afforded these additional insureds, the following additional exclusions apply:

This insurance does not apply to:

a. *Bodily injury, property damage* or *personal and advertising injury* arising out of the rendering of, or the failure to render, any professional architectural, engineering or surveying services, including:

(1) The preparing, approving or failing to prepare or approve maps, shop drawings, opinions, reports, surveys, field orders, change orders or drawings and specifications; or

(2) Supervisory, inspection, architectural or engineering activities.

This exclusion applies even if the claims against any insured allege negligence or other wrongdoing in the supervision, hiring, employment, training or monitoring of others by that insured, if the *occurrence* which caused the *bodily injury* or *property damage* involved the rendering of or the failure to render any professional architectural, engineering or surveying services.

b. *Bodily injury* or *property damage* occurring after:

(1) All work, including materials, parts or equipment furnished in connection with such work, on the project (other than service, maintenance or repairs) to be performed by or on behalf of the additional insured(s) at the location of the covered operations has been completed; or

(2) That portion of *your work* out of which the injury or damage arises has been put to its intended use by any person or organization other than another contractor or subcontractor engaged in performing operations for a principal as a part of the same project.

3. With respect to the insurance afforded to these additional insureds, the following is added to Section III - Limits Of Insurance:

The most we will pay on behalf of the additional insured is the amount of insurance:

a. Required by the contract or agreement you have entered into with the additional insured; or

b. Available under the applicable Limits of Insurance shown in the Declarations;

whichever is less.

This endorsement shall not increase the applicable Limits of Insurance shown in the Declarations.

ADDITIONAL INSURED - COMPLETED OPERATIONS AUTOMATIC STATUS WHEN REQUIRED IN CONSTRUCTION AGREEMENT WITH YOU (OWNERS, LESSEES OR CONTRACTORS) **CG-7277(6-13)**

This endorsement modifies insurance provided under the following:

COMMERCIAL GENERAL LIABILITY COVERAGE PART

PRODUCTS-COMPLETED OPERATIONS LIABILITY COVERAGE FORM

1. Section II - Who Is An Insured is amended to include as an additional insured:

a. Any person(s) or organization(s) for whom you have performed operations if you and such person(s) or organization(s) have agreed in writing in a contract or agreement that such person(s) or organization(s) be added as additional insured on your policy for completed operations; and

b. Any other person(s) or organization(s) you are required to add as an additional insured under the contract or agreement described in paragraph a above.

Such person or organization is an additional insured only with respect to liability included in the *products-completed operations hazard* for *bodily injury* or *property damage* caused, in whole or in part, by *your work* performed for that additional insured at the location designated and described in the contract or agreement.

However:

a. The insurance afforded to such additional insured only applies to the extent permitted by law; and

b. If coverage provided to the additional insured is required by a contract or agreement, the insurance afforded to such additional insured will not be broader than that which you are required by the contract or agreement to provide for such additional insured.

2. This insurance does not apply to:

a. *Bodily injury* or *property damage* which occurs prior to the execution of the contract or agreement described in item 1; or

b. *Bodily injury* or *property damage* that occurs after the time period during which the contract or agreement described in item 1 requires you to add such person or organization onto your policy as an additional insured for completed operations; or

c. *Bodily injury* or *property damage* arising out of the rendering of, or the failure to render, any professional, architectural, engineering or surveying services, including:

(1) The preparing, approving or failing to prepare or approve maps, shop drawings, opinions, reports, surveys, field orders, change orders or drawings and specifications; or

(2) Supervisory, inspection, architectural or engineering activities.

This exclusion applies even if the claims against any insured allege negligence or other wrongdoing in the supervision, hiring, employment, training or monitoring of others by that insured, if the *occurrence* which caused the *bodily injury* or *property damage* involved the rendering of or the failure to render any professional services by or for you.

3. With respect to the insurance afforded to these additional insureds, the following is added to Section III - Limits Of Insurance:

If coverage provided to the additional insured is required by a contract or agreement, the most we will pay on behalf of the additional insured is the amount of insurance:

a. Required by the contract or agreement; or

b. Available under the applicable Limits of Insurance shown in the Declarations;

whichever is less.

This endorsement shall not increase the applicable Limits of Insurance shown in the Declarations.

PRIMARY AND NONCONTRIBUTORY - OTHER INSURANCE CONDITION

CG-2001R(4-13)

This endorsement modifies insurance provided under the following:

COMMERCIAL GENERAL LIABILITY COVERAGE PART

PRODUCTS-COMPLETED OPERATIONS LIABILITY COVERAGE FORM

RESIDENTIAL CARE FACILITY LIABILITY COVERAGE PART

The following is added to the Other Insurance Condition and supersedes any provision to the contrary:

Primary And Noncontributory Insurance

This insurance is primary to and will not seek contribution from any other insurance available to an additional insured under your policy provided that:

(1) The additional insured is a Named Insured under such other insurance; and

(2) You have agreed in writing in a contract or agreement that this insurance would be primary and would not seek contribution from any other insurance available to the additional insured.

CITY OF SANTA FE
AMENDMENT No. 1 TO
PRICE AGREEMENT # 21-0378

AMENDMENT No. 1 (the "Amendment") to the CITY OF SANTA FE PRICE AGREEMENT, July 28, 2021 (the "Agreement"), between the City of Santa Fe (the "City") and Sub Surface Contracting Inc. (the "Contractor"). The date of this Amendment shall be the date when it is executed by the City.

RECITALS

A. Under the terms of the Agreement, Contractor has agreed to provide Construction Services for City Wide Utility Construction & Repair for the City of Santa Fe.

B. Pursuant to Article 14 of the Agreement, and for good and valuable consideration, the receipt and sufficiency of which are acknowledged by the parties, the City and the Contractor agree as follows:

1. COMPENSATION.

Article 2, paragraph A of the Agreement is amended to remove the per Fiscal Year Cap, so that Article 2, paragraph A reads in its entirety as follows:

2. Compensation.

A. The City shall pay to the Contractor in full payment for services satisfactorily performed BASED UPON THE ATTACHED PRICE SHEETS, such compensation not to exceed one million dollars ($1,000,000) excluding gross receipts tax for a total of 4 years. The New Mexico gross receipts tax levied on the amounts payable under this Agreement totaling eighty-four thousand three hundred seventy-five dollars ($84,375) shall be paid by the City to the Contractor. **The total amount payable to the Contractor under this Agreement, including gross receipts tax and expenses, shall not exceed one million eighty-four thousand three hundred and seventy-six dollars ($1,084,376). This amount is a maximum and not a guarantee that the work assigned to be performed by Contractor under this Agreement shall equal the amount stated herein. The parties do not intend for the Contractor to continue to**

provide services without compensation when the total compensation amount is reached. Contractor is responsible for notifying the City when the services provided under this Agreement reach the total compensation amount. In no event will the Contractor be paid for services provided in excess of the total compensation amount without this Agreement being amended in writing prior to those services in excess of the total compensation amount being provided.

2. AGREEMENT IN FULL FORCE.

Except as specifically provided in this Amendment, the Agreement remains and shall remain in full force and effect, in accordance with its terms.

IN WITNESS WHEREOF, the parties have executed this Amendment No.1 to the City of Santa Fe Price Agreement as of the dates set forth below.

CITY OF SANTA FE:

ALAN WEBBER, MAYOR

Date: May 23, 2022

CONTRACTOR:
SUB SURFACE CONTRACTING.
NEAL KEIPER

NAME & TITLE

Date: 4-14-22

CRS# 02104256000
Registration #4691

ATTEST:

KRISTINE BUSTOS MIHELCIC, CITY CLERK
GB MTG 05/11/2022

CITY ATTORNEY'S OFFICE:

Marcos Martinez
Marcos Martinez (Apr 11, 2022 08:11 MDT)

Apr 11, 2022

SENIOR ASSISTANT CITY ATTORNEY

APPROVED:

Alexis Lotero
Alexis Lotero (May 22, 2022 21:51 MDT)

~~MARY MCCOY~~, FINANCE DIRECTOR
5050386.520200 AH
AH

(Rev. 4/20)

City of Santa Fe
Central Purchasing Office

Price Agreement

Awarded Contractor(s): 1) Sub Surface Contracting, Inc. 2) A.A.C. Construction, LLC.	**Price Agreement Number:** **Payment Terms: Net 30**
Ship To: **All City of Santa Fe Departments and Political Subdivisions allowed by Law**	**F.O.B.: Destination**
Invoice To: **City of Santa Fe** **Accounts Payable** **PO Box 909** **Santa Fe, NM 87504-0909**	**Term: July 1, 2021 to June 30, 2025** **Delivery: As requested by Department**

Title: City Wide Water Utility Construction & Repair Price Agreement, CIP # 3057

This Price Agreement is to be awarded pursuant to the respective Invitation to Bid (ITB) 21/37/B and shall become a part thereof.

This Price Agreement is made subject to the "terms and conditions" as indicated on subsequent price agreement articles and construction contract pages.

Instructions to Supplier:

- By commencing under this Price Agreement (Agreement), the Contractor agrees to all terms and conditions within and attached and agrees that if there is a conflict with the Contractors terms, the City of Santa Fe's terms and conditions shall govern. In cases of discrepancy between the work order, purchase order and this Agreement, the terms and conditions of this Agreement shall prevail.
- Do not fill orders for goods/services not listed in this Agreement.
- Orders against this Agreement must be placed with as a separate contract work order with a purchase order.
- Do not fill orders without a valid quote, purchase order work order.
- The purchase order release number must be on all invoices.
- The City of Santa Fe (City) will not be liable for purchases made by unauthorized individuals.

Please forward all original invoice(s) to the Accounts Payable Department at PO Box 909, Santa Fe, NM 87504-0909

Instructions to Requesting Department:

- Do not place orders for goods/services not listed in the Procurement Contract.
- To place an order against this Procurement Contract, issue a Purchase Order Release before placing the order with the Supplier.

This Price Agreement is made subject to the "terms and conditions" as indicated on subsequent pages.

Terms and Conditions

General: When the City or the Requesting Department issues a contract or a purchase order release, a binding contract is created.

Variation in Quantity: No variation in the quantity of any item called for by this order will be accepted unless such variation has been caused by conditions of loading, shipping, packing or allowances in manufacturing process and then only to the extent, if any, specified in this order.

Assignment:

a. Neither the order, nor any interest therein, nor any claim thereunder, shall be assigned or transferred by the Contractor, except as set forth in Subparagraph 3b or as expressly authorized in writing by the Chief Procurement Officer or his/her designee. No such assignment or transfer shall relieve the Contractor from the obligations and liabilities under this order.

b. Contractor agrees that any and all claims for overcharge resulting from antitrust violations which are borne by the City as to goods, services, and materials purchased in connection with this agreement are hereby assigned to the City.

City Furnished Property: City furnished property shall be returned to the City upon request in the same condition as received except for ordinary wear, tear and modifications ordered hereunder.

Inspection: Final inspection and acceptance will be made at the destination. Supplies rejected at the destination for nonconformance with specifications shall be removed at the Contractor's risk and expense, promptly after notice of rejection.

Inspection of Plant: The Chief Procurement Officer or his/her designee may inspect, at any reasonable time, the part of the Contractor's, or any subcontractor's plant or place of business, which is related to the performance of this contract.

Commercial Warranty: The Contractor agrees that the supplies or services furnished under this order shall be covered by the most favorable commercial warranties the Contractor gives for such to any customer for such supplies or services. The rights and remedies provided herein shall extend to the City and are in addition to and do not limit any rights afforded to the City by any other clause of this order. **Contractor agrees not to disclaim warranties of fitness for a particular purpose of merchantability.**

Taxes: The unit price shall exclude all state taxes.

Default: The City reserves the right to cancel all or any part of this order without cost to the City, if the Contractor fails to meet the provisions of this order and, except as otherwise provided herein, to hold the Contractor liable for any excess cost occasioned by the City due to the Contractor's default. The Contractor shall not be liable for any excess costs if failure to perform the order arises out of causes beyond the control and without the fault or negligence of the Contractor, such causes include but are not restricted to, acts of God or the public enemy, acts of the State or Federal Government, fires, floods, epidemics, quarantine restrictions, strikes, freight embargoes, unusually severe weather and defaults of subcontractors due to any of the above, unless the City shall determine that the supplies or services to be furnished by the subcontractor were obtainable from other sources in sufficient time to permit the Contractor to meet the required delivery scheduled. The rights of

the City provided in this paragraph shall not be exclusive and are in addition to any other rights now being provided by law or under this order.

Non-Collusion: In signing this bid the Contractor certifies he/she has not, either directly or indirectly, entered into action in restraint of free competitive bidding in connection with this offer submitted to the Chief Procurement Officer or his/her designee.

Nondiscrimination: Contractor doing business with the City must be in compliance with the Federal Civil Rights Act of 1964 and Title VII of the Act (Rev. 1979) and the Americans with Disabilities Act of 1990 (Public Law 101-336).

The Procurement Code: Sections 13-1-28 through 13-1-199 NMSA 1978, imposes civil and criminal penalties for its violation. In addition the New Mexico criminal statutes impose felony penalties for bribes, gratuities and kickbacks.

Items: All bid items are to be NEW and of most current production, unless otherwise specified.

Payment for Purchases: Except as otherwise agreed to: late payment charges may be assessed against the Requesting Department in the amount and under the conditions set forth in Section 13-1-158 NMSA 1978.

Workers' Compensation: The Contractor agrees to comply with state laws and rules pertaining to Workers' Compensation benefits for its employees. If the Contractor fails to comply with Workers' Compensation Act and applicable rules when required to do so, this Agreement may be terminated by the contracting agency.

Contractor Personnel: Personnel proposed in the Contractor's written bid to the Procuring Agency are considered material to any work performed under this Price Agreement. Once a Purchase Order or contract has been executed, no changes of personnel will be made by the Contractor without prior written consent of the Requesting Department. Replacement of any Contractor personnel, if approved, shall be with personnel of equal ability, experience, and qualifications. The Contractor will be responsible for any expenses incurred in familiarizing the replacement personnel to insure their being productive to the project immediately upon receiving assignments. Approval of replacement personnel shall not be unreasonably withheld. The Requesting Department shall retain the right to request the removal of any of the Contractor's personnel at any time.

Subcontracting: The Contractor shall not subcontract any portion of the Price Agreement without the prior written approval of the Requesting Department. No such subcontracting shall relieve the Contractor from its obligations and liabilities under this Price Agreement, nor shall any subcontracting obligate payment from the City.

Records and Audit: The Contractor shall maintain detailed time and expenditure records that indicate the date, time, nature, and cost of services rendered during this Price Agreement's term and effect, and retain them for a period of three (3) years from the date of final payment under this Price Agreement. The records shall be subject to inspection by the City. The City shall have the right to audit billings, both before and after payment. Payment for services under this Price Agreement shall not foreclose the right of the City to recover excessive or illegal payments.

Subcontracts: The foregoing requirements for Contractor Personnel, Subcontracting, and Audit shall be inserted into all subcontracts from the prime contractor to the subcontractor.

ARTICLES

Article I – Statement of Work
Under the terms and conditions of this Price Agreement all commissions, institutions, political subdivisions and local public bodies allowed by law may issue orders for items and/or services described herein. The terms and conditions of this Price Agreement shall form a part of each order issued hereunder.

The items and/or services to be ordered shall be as listed under Article IX - Price Schedule. All orders issued hereunder will bear both an order number and this Price Agreement number. It is understood that no guarantee or warranty is made or implied by the City's Chief Procurement Officer, his/her designee or the Requesting Department that any order for any definite quantity will be issued under this Price Agreement. The Contractor is required to accept the order and furnish the items and/or services in accordance with the articles contained hereunder for the quantity of each order.

Article II – Term
The term of this Price Agreement, for issuance of orders, shall be as indicated in the specifications.

Article III – Specifications
Items and/or services furnished hereunder shall conform to the requirements of specifications and/or drawings applicable to items listed under Article IX-Price Schedule. Orders issued against this schedule will show the applicable Price Agreement item(s), number(s), and price(s); however they may not describe the item(s) fully.

Article IV – Shipping and Billing Instructions
Delivery shall be as called for by the Requesting Department. Shipment shall be made only against specific orders which the Requesting Department may place with the Contractor during the term. Contractor shall ship in accordance with the following instructions:

a. The Contractor shall enclose a packing list with each shipment listing the City's purchasing document number and the Contractor's name, Requesting Department's contact name and location shall be shown on each packing and delivery ticket, package, bill of lading, the commercial parts number (if any) for each item and other correspondence in connection with the shipments. The Requesting Department's count will be accepted by the Contractor as final and conclusive on all shipments not accompanied by a packing ticket.

b. The Contractor's invoice shall be submitted duly certified and shall contain the following information: order number, description of supplies or services, quantities, unit price and extended totals. Separate invoices shall be rendered for each and every complete shipment.

c. Invoices must be submitted to the City's **Accounts Payable** and NOT the Central Purchasing Office.

If Contractor is unable to meet stated delivery the City's Chief Procurement Officer or his/her designee must be notified.

Article V – Termination
The City may terminate this Agreement for convenience or cause. The Contractor may only terminate this Agreement based upon the City's uncured, material breach of this Agreement. Contractor shall give the City written notice of termination at least thirty (30) days prior to the intended date of termination, which notice shall (i) identify all the City's material breaches of this Agreement upon which the termination is based and (ii) state what the City must do to cure such material breaches. Contractor's notice of termination shall only be effective (i) if the City does not cure all material breaches within the thirty (30) day notice period or (ii) in the case of material breaches that cannot be cured within thirty (30) days, the City does not, within the thirty (30) day notice period, notify the Contractor of its intent to cure and begin with due diligence to cure the material breach.

Termination of this Contract, however, shall not affect any outstanding orders. This provision is not exclusive and shall not waive other rights and remedies afforded either party in the event of breach of contract or default. In such instances the contract may be cancelled effective immediately.

Article VI – Amendment
This Price Agreement may be amended by mutual agreement of the City's Chief procurement Officer or his/her designee and the Contractor upon written notice by either party to the other. An amendment to this Price Agreement shall not affect any outstanding orders issued prior to the effective date of the amendment as mutually agreed upon, and as published by the City's Chief procurement Officer or his/her designee. Amendments affecting price adjustments and/or the extension of a price agreement expiration date are not allowed unless specifically provided in the bid and price agreement specifications.

Article VII – Indemnity Clause
Contractor shall indemnify and hold harmless the City, its officers and employees, against liability, claims, damages, losses or expenses arising out of bodily injury to persons or damage to properties caused by, or resulting from Contractor's, and/or its employees, own negligent act or omission while Contractor, and/or its employees, perform or fails to perform its obligations and duties under the Terms and Conditions of this agreement. This hold harmless and indemnification clause is subject to the immunities, provisions, and limitations of the Tort Claims Act (Section 41-4-1, et seq., N.M.S.A. 1978 comp. and Section 57-7-1 N.M.S.A. 1878 comp. and any amendments thereto.

It is specifically agreed between the parties executing this agreement that it is not intended by any of the provisions of any part of the agreement to create in the public or any member thereof a third party beneficiary or to authorize anyone not a party to the agreement to maintain a suit(s) for wrongful death(s), bodily and/ or personal injury(s) to person(s), damage(s) to property(ies) and/or any other claim(s) whatsoever pursuant to the provisions of this agreement.

Contractor shall provide all insurance necessary to employees on the work site, including but not limited to Worker's Compensation.

Article VIII – Issuance or Orders
Only written signed orders are valid under this Price Agreement.

Article IX – Packing (if applicable)
Packing shall be in conformance with standard commercial practices.

Article X – Price Schedule
Prices as listed in the item(s) price schedule hereto attached are firm.

Article XI – Wage Rates
Pursuant to the requirements of any Contract entered into that will have a Work Order (WO) in excess of sixty thousand dollars ($60,000) for construction is subject to the minimum wage rate determination issued by the New Mexico Department of Work Force Solutions for this project/WO.

Item# 21-0378
Munis Contract#_____

CITY OF SANTA FE

ON CALL CITY-WIDE WATER UTILITY CONSTRUCTION & REPAIR PRICE AGREEMENT, CIP # 3057

THIS AGREEMENT is made and entered into by and between the **CITY OF SANTA FE, NEW MEXICO**,hereinafter referred to as the "City," and **SUB SURFACE CONTRACTING, INC. AND A.A.C. CONSTRUCTION**, hereinafter referred to as the "Contractor" and is effective as of the date set forth below upon which it is executed by the Parties.

IT IS AGREED BETWEEN THE PARTIES:

1. Scope of Work.

A. The Contractor shall perform the following work:

1) The Contractor shall perform all the work required by Water Division, as required, on each Work Order (W/O) in the Contract Documents (attached) for City-Wide Water Construction & Repair Contract. The work consists of, but is not limited to furnishing all equipment, labor and materials for the construction and repair of water mains, valves, hydrants, metered water service lines and settings, pressure reducing valves, vaults, and other incidental work such as pavement removal and replacement, traffic control all as required to extend, replace or repair water distribution, water storage, and water supply infrastructure, in accordance with the drawings, specifications, W/O, attached price sheets and other Contract Documents. All water piping shall be new, poly-wrapped ductile iron, unless otherwise specified.

2) The Contractor shall be responsible for verifications of all measurements and dimensions for bidding on each subsequent Work Order.

3) The Contractor shall provide and keep at the work site, a complete "as-built" record set of drawings that shall be corrected daily and shall show every change from the original approved drawings and specifications. These changes shall be forwarded to City periodically. The drawings shall reflect exact and actual "as-built" conditions of construction, installation, and erection as it progresses. Where drawings are not adequate to show "as-built" conditions, Contractor shall prepare sketches which delineate the necessary "as-built" information. City shall furnish two (2) sets of all paper "blue-line" print "approved" drawings for use in accomplishing specified mark-up. Final "as-built" drawings shall be delivered to City by Contractor upon completion of the work.

4) The Contractor shall be responsible for maintaining traffic control at the site in conformance with the Manual on Uniform Traffic Control Devices.

5) The Contractor shall be responsible for all permits, fees, and State and City inspections associated with the construction.

6) Incorporation by Reference. All exhibits, addenda, schedules of ITB 21/37/B attached hereto and all certificates, work order documents, drawings, as-builts and other instruments contemplated to be delivered hereunder are hereby expressly made a part of this Agreement as fully as though set forth herein, and all references to this Agreement herein or in any of such writings shall be deemed to refer to and include all of such writings. This Agreement contains the entire agreement between the parties with respect to the subject matter hereof and supersedes all prior agreements and understandings, both written and oral, among the parties with respect to the subject matter hereof. If there is any conflict between such exhibits or addenda and the terms of this Agreement, such exhibits or addenda shall control.

2. Compensation.

A. The City shall pay to the Contractor in full payment for services satisfactorily performed BASED UPON THE ATTACHED PRICE SHEETS, such compensation not to exceed two hundred and fifty thousand dollars ($250,000) excluding gross receipts tax per Fiscal Year for a total of four (4) years. The New Mexico gross receipts tax levied on the amounts payable under this Agreement totaling twenty one thousand and ninety four dollars ($21,094) shall be paid by the City to the Contractor per Fiscal Year. **The total amount payable to the Contractor under this Agreement, including gross receipts tax and expenses, shall not exceed one million eighty four thousand three hundred and seventy six dollars ($1,084,376.). This amount is a maximum and not a guarantee that the work assigned to be performed by Contractor under this Agreement shall equal the amount stated herein. The parties do not intend for the Contractor to continue to provide services without compensation when the total compensation amount is reached. Contractor is responsible for notifying the City when the services provided under this Agreement reach the total compensation amount. In no event will the Contractor be paid for services provided in excess of the total compensation amount without this Agreement being amended in writing prior to those services in excess of the total compensation amount being provided.**

B. Payment is subject to availability of funds pursuant to the Appropriations Paragraph set forth below and to any negotiations between the parties from year to year pursuant to Paragraph 1, Scope of Work, and to approval by the City. All invoices MUST BE received by the City no later than thirty 30) days after the termination of the Fiscal Year in which the services were delivered. Invoices received after such date WILL NOT BE PAID.

C. Payment in future fiscal years is subject to availability of funds pursuant to the Appropriations Paragraph set forth below and to any negotiations between the parties from year to year pursuant to Paragraph 1, Scope of Work, and to approval by the City. All invoices MUST BE received by the City no later than fifteen (15) days after the termination of the Fiscal Year in which the services were delivered. Invoices received after such date WILL NOT BE PAID.)

E. The Contractor must submit a detailed statement accounting for all services performed and expenses incurred. If the City finds that the services are not acceptable, within thirty days after the date of receipt of written notice from the Contractor that payment is requested, it shall provide the Contractor a letter of exception explaining the defect or objection to the services, and outlining steps the Contractor may take to provide remedial action. Upon certification by the City that the services have been received and accepted, payment shall be tendered to the Contractor within thirty days after the date of acceptance. If payment is made by mail, the payment shall be deemed tendered on the date it is

postmarked. However, the City shall not incur late charges, interest, or penalties for failure to make payment within the time specified herein.

3. Term.

THIS AGREEMENT SHALL NOT BECOME EFFECTIVE UNTIL APPROVED BY THE CITY. This Agreement shall terminate on **June 30, 2025**unless terminated pursuant to paragraph 4 (Termination), or paragraph 5 (Appropriations). In accordance with Section 13-1-150 NMSA 1978, no contract term for a professional services contract, including extensions and renewals, shall exceed four years, except as set forth in Section 13-1-150 NMSA 1978.

4. Termination.

A. Termination. This Agreement may be terminated by either of the parties hereto upon written notice delivered to the other party at least thirty (30) days prior to the intended date of termination. Except as otherwise allowed or provided under this Agreement, the City's sole liability upon such termination shall be to pay for acceptable work performed prior to the Contractor's receipt of the notice of termination, if the City is the terminating party, or the Contractor's sending of the notice of termination, if the Contractor is the terminating party; provided, however, that a notice of termination shall not nullify or otherwise affect either party's liability for pre-termination defaults under or breaches of this Agreement. The Contractor shall submit an invoice for such work within thirty (30) days of receiving or sending the notice of termination. Notwithstanding the foregoing, this Agreement may be terminated immediately upon written notice to the Contractor if the Contractor becomes unable to perform the services contracted for, as determined by the City or if, during the term of this Agreement, the Contractor or any of its officers, employees or agents is indicted for fraud, embezzlement or other crime due to misuse of City funds or due to the Appropriations paragraph herein. *THIS PROVISION IS NOT EXCLUSIVE AND DOES NOT WAIVE THE City's OTHER LEGAL RIGHTS AND REMEDIES CAUSED BY THE CONTRACTOR'S DEFAULT/BREACH OF THIS AGREEMENT.*

B. Termination Management. Immediately upon receipt by either the City or the Contractor of notice of termination of this Agreement, the Contractor shall: 1) not incur any further obligations for salaries, services or any other expenditure of funds under this Agreement without written approval of the City; 2) comply with all directives issued by the City in the notice of termination as to the performance of work under this Agreement; and 3) take such action as the City shall direct for the protection, preservation, retention or transfer of all property titled to the City and records generated under this Agreement. Any non-expendable personal property or equipment provided to or purchased by the Contractor with contract funds shall become property of the City upon termination and shall be submitted to the City as soon as practicable.

5. Appropriations.

The terms of this Agreement are contingent upon sufficient appropriations and authorization being made by the City Council for the performance of this Agreement. If sufficient appropriations and authorization are not made by the City Council, this Agreement shall terminate immediately upon written notice being given by the City to the Contractor. The City's decision as to whether sufficient appropriations are available shall be accepted by the Contractor and shall be final. If the City proposes an amendment to the Agreement to unilaterally reduce funding, the Contractor shall have the option to terminate the Agreement or to agree to the reduced funding, within thirty (30) days of receipt of the proposed amendment.

6. Status of Contractor.

The Contractor and its agents and employees are independent contractors performing professional services for the City and are not employees of the City. The Contractor and its agents and employees shall not accrue leave, retirement, insurance, bonding, use of City vehicles, or any other benefits afforded to employees of the City as a result of this Agreement. The Contractor acknowledges that all sums received hereunder are reportable by the Contractor for tax purposes, including without limitation, self-employment and business income tax. The Contractor agrees not to purport to bind the City unless the Contractor has express written authority to do so, and then only within the strict limits of that authority.

7. Construction Contract Performance and Payment Bond.

A. When a construction contract is awarded in excess of twenty-five thousand dollars ($25,000), the following bonds or security shall be delivered to the City and shall become binding on the parties upon the execution of the contract. If the Contractor fails to deliver the required performance and payment bonds, the Contractor's bid shall be rejected, its bid security shall be enforced to the extent of actual damages. Award of the contract shall be made pursuant to the Procurement Code in the following manner:

1) a performance bond satisfactory to the City, executed by a surety company authorized to do business in this state and said surety to be approved in federal circular 570 as published by the United States treasury department or the state board of finance or the local governing authority, in an amount equal to one hundred percent of the price specified in the contract; and

2) a payment bond satisfactory to the City, executed by a surety company authorized to do business in this state and said surety to be approved in federal circular 570 as published by the United States treasury department or the state board of finance or the local governing authority, in an amount equal to one hundred percent of the price specified in the contract, for the protection of all persons supplying labor and material to the contractor or its subcontractors for the performance of the work provided for in the contract.

B. A subcontractor shall provide a performance and payment bond on a public works building project if the subcontractor's contract for work to be performed on a project is one hundred twenty-five thousand dollars ($125,000) or more.

8. Assignment.

The Contractor shall not assign or transfer any interest in this Agreement or assign any claims for money due or to become due under this Agreement without the prior written approval of the City.

9. Subcontracting.

The Contractor shall not subcontract any portion of the services to be performed under this Agreement without the prior written approval of the City. No such subcontract shall relieve the primary Contractor from its obligations and liabilities under this Agreement, nor shall any subcontract obligate direct payment from the City.

10. Release.

Final payment of the amounts due under this Agreement shall operate as a release of the City, its officers and employees from all liabilities, claims and obligations whatsoever arising from or under this Agreement.

11. Confidentiality.

Any confidential information provided to or developed by the Contractor in the performance of this Agreement shall be kept confidential and shall not be made available to any individual or organization by the Contractor without the prior written approval of the City.

12. Product of Service – Copyright.

All materials developed or acquired by the Contractor under this Agreement shall become the property of the City and shall be delivered to the City no later than the termination date of this Agreement. Nothing developed or produced, in whole or in part, by the Contractor under this Agreement shall be the subject of an application for copyright or other claim of ownership by or on behalf of the Contractor.

13. Conflict of Interest; Governmental Conduct Act.

A. The Contractor represents and warrants that it presently has no interest and, during the term of this Agreement, shall not acquire any interest, direct or indirect, which would conflict in any manner or degree with the performance or services required under the Agreement.

B. The Contractor further represents and warrants that it has complied with, and, during the term of this Agreement, will continue to comply with, and that this Agreement complies with all applicable provisions of the Governmental Conduct Act, Chapter 10, Article 16 NMSA 1978.

C. Contractor's representations and warranties in Paragraphs A and B of this Article 12 are material representations of fact upon which the City relied when this Agreement was entered into by the parties. Contractor shall provide immediate written notice to the City if, at any time during the term of this Agreement, Contractor learns that Contractor's representations and warranties in Paragraphs A and B of this Article 12 were erroneous on the effective date of this Agreement or have become erroneous by reason of new or changed circumstances. If it is later determined that Contractor's representations and warranties in Paragraphs A and B of this Article 12 were erroneous on the effective date of this Agreement or have become erroneous by reason of new or changed circumstances, in addition to other remedies available to the City and notwithstanding anything in the Agreement to the contrary, the City may immediately terminate the Agreement.

D. All terms defined in the Governmental Conduct Act have the same meaning in this section.

14. Amendment.

A. This Agreement shall not be altered, changed or amended except by instrument in writing executed by the parties hereto and all other required signatories.

B. If the City proposes an amendment to the Agreement to unilaterally reduce funding due to budget or other considerations, the Contractor shall, within thirty (30) days of receipt of the proposed Amendment, have the option to terminate the Agreement, pursuant to the termination provisions as set forth in Article 4 herein, or to agree to the reduced funding.

15. Change Orders.

Changes. The Contractor may only make changes or revisions within the Scope of Work as defined by Article 1 and/or Exhibit 1 after receipt of written approval by the City Manager or his/her designee. Such change may only be made to Tasks or Sub-Task as defined in the Scope of Work. Under no circumstance shall such change affect the:

1. Deliverable requirements, as outlined in the Scope of Work;
2. Due date of any Deliverable, as outlined in the Scope of Work;
3. Compensation of any Deliverable, as outlined in the Scope of Work;
4. Agreement compensation, as outlined in Article 2; or
5. Agreement termination, as outlined in Article 4.

Change Request Process. In the event that circumstances warrant a change to accomplish the Scope of Work as described above, a Change Request shall be submitted that meets the following criteria:

The Project Manager shall draft a written Change Request for review and approval by the City Manager to include:

1. the name of the person requesting the change;
2. a summary of the required change;
3. the start date for the change;
4. the reason and necessity for change;
5. the elements to be altered; and
6. the impact of the change.

The City Manager shall provide a written decision on the Change Request to the Contractor within a maximum of ten (10) Business Days of receipt of the Change Request. All decisions made by the City Manager are final. Change Requests, once approved, become a part of the Agreement and become binding as a part of the original Agreement.

16. Merger.

This Agreement incorporates all the Agreements, covenants and understandings between the parties hereto concerning the subject matter hereof, and all such covenants, Agreements and understandings have been merged into this written Agreement. No prior Agreement or understanding, oral or otherwise, of the parties or their agents shall be valid or enforceable unless embodied in this Agreement.

17. Entire Agreement.

This Agreement, together with any other documents incorporated herein by reference and all related Exhibits and Schedules constitutes the sole and entire agreement of the Parties with respect to the subject matter of this Agreement, and supersedes all prior and contemporaneous understandings, agreements, representations, and warranties, both written and oral, with respect to the subject matter. In the event of any inconsistency between the statements in the body of this Agreement, and the related Exhibits and Schedules, the statements in the body of this Agreement shall control.

18. Penalties for violation of law.

The Procurement Code, Sections 13-1-28 through 13-1-199, NMSA 1978, imposes civil and criminal penalties for its violation. In addition, the New Mexico criminal statutes impose felony penalties for illegal bribes, gratuities and kickbacks.

19. Equal Opportunity Compliance.

The Contractor agrees to abide by all federal and state laws and rules and regulations, and Santa Fe City Code, pertaining to equal employment opportunity. In accordance with all such laws of the State of New Mexico, the Contractor assures that no person in the United States shall, on the grounds of race, religion, color, national origin, ancestry, sex, age, physical or mental handicap, or serious medical condition, spousal affiliation, sexual orientation or gender identity, be excluded from employment with or participation in, be denied the benefits of, or be otherwise subjected to discrimination under any program or activity performed under this Agreement. If Contractor is found not to be in compliance with these requirements during the life of this Agreement, Contractor agrees to take appropriate steps to correct these deficiencies.

20. Applicable Law.

The laws of the State of New Mexico shall govern this Agreement, without giving effect to its choice of law provisions. Venue shall be proper only in a New Mexico court of competent jurisdiction in accordance with Section 38-3-1 (G) NMSA 1978. By execution of this Agreement, Contractor acknowledges and agrees to the jurisdiction of the courts of the State of New Mexico over any and all lawsuits arising under or out of any term of this Agreement.

21. Workers Compensation.

The Contractor agrees to comply with state laws and rules applicable to workers compensation benefits for its employees. If the Contractor fails to comply with the Workers Compensation Act and applicable rules when required to do so, this Agreement may be terminated by the City.

22. Professional Liability Insurance.

Contractor shall maintain professional liability insurance throughout the term of this Agreement providing a minimum coverage in the amount required under the New Mexico Tort Claims Act. The Contractor shall furnish the City with proof of insurance of Contractor's compliance with the provisions of this section as a condition prior to performing services under this Agreement.

23. Other Insurance

If the services contemplated under this Agreement will be performed on or in City facilities or property, Contractor shall maintain in force during the entire term of this Agreement, the following insurance coverage(s), naming the City as additional insured.

A. Commercial General Liability insurance shall be written on an occurrence basis and be a broad as ISO Form CG 00 01 with limits not less than $2,000,000 per occurrence and $2,000,000 in the aggregate for claims against bodily injury, personal and advertising injury, and property damage. Said policy shall include broad form Contractual Liability coverage and be endorsed to name the City of Santa Fe their officials, officers, employees, and agents as additional insureds.

B. Business Automobile Liability insurance for all owned, non-owned automobiles, with a combined single limit not less than $1,000,000 per accident.

C. Broader Coverage and Limits. The insurance requirements under this Agreement shall be the greater of (1) the minimum coverage and limits specified in this Agreement, or (2) the broader coverage and maximum limits of coverage of any insurance policy or proceeds available to the Named Insured. It is agreed that these insurance requirements shall not in any way act to reduce coverage that is broader or that includes higher limits than the minimums required herein. No representation is made that the minimum insurance requirements of this Agreement are sufficient to cover the obligations of Contractor hereunder.

D. Contractor shall maintain the above insurance for the term of this Agreement and name the City as an additional insured and provide for 30 days cancellation notice on any Certificate of Insurance form furnished by Contractor. Such certificate shall also specifically state the coverage provided under the policy is primary over any other valid and collectible insurance and provide a waiver of subrogation.

24. Records and Financial Audit.

The Contractor shall maintain detailed time and expenditure records that indicate the date; time, nature and cost of services rendered during the Agreement's term and effect and retain them for a period of three (3) years from the date of final payment under this Agreement. The records shall be subject to inspection by the City. The City shall have the right to audit billings both before and after payment. Payment under this Agreement shall not foreclose the right of the City to recover excessive or illegal payments

25. Indemnification.

The Contractor shall defend, indemnify and hold harmless the City from all actions, proceeding, claims, demands, costs, damages, attorneys' fees and all other liabilities and expenses of any kind from any source which may arise out of the performance of this Agreement, caused by the negligent act or failure to act of the Contractor, its officers, employees, servants, subcontractors or agents, or if caused by the actions of any client of the Contractor resulting in injury or damage to persons or property during the time when the Contractor or any officer, agent, employee, servant or subcontractor thereof has or is performing services pursuant to this Agreement. In the event that any action, suit or proceeding related to the services performed by the Contractor or any officer, agent, employee, servant or subcontractor under this Agreement is brought against the Contractor, the Contractor shall, as soon as practicable but no later than two (2) days after it receives notice thereof, notify the legal counsel of the City.

26. New Mexico Tort Claims Act

Any liability incurred by the City of Santa Fe in connection with this Agreement is subject to the immunities and limitations of the New Mexico Tort Claims Act, Section 41-4-1, et. seq. NMSA 1978, as amended. The City and its "public employees" as defined in the New Mexico Tort Claims Act, do not waive sovereign immunity, do not waive any defense and do not waive any limitation of liability pursuant to law. No provision in this Agreement modifies or waives any provision of the New Mexico Tort Claims Act.

27. Invalid Term or Condition.

If any term or condition of this Agreement shall be held invalid or unenforceable, the remainder of this Agreement shall not be affected and shall be valid and enforceable.

28. Enforcement of Agreement.

A party's failure to require strict performance of any provision of this Agreement shall not waive or diminish that party's right thereafter to demand strict compliance with that or any other provision. No waiver by a party of any of its rights under this Agreement shall be effective unless express and in writing, and no effective waiver by a party of any of its rights shall be effective to waive any other rights.

29. Notices.

Any notice required to be given to either party by this Agreement shall be in writing and shall be delivered in person, by courier service or by U.S. mail, either first class or certified, return receipt requested, postage prepaid, as follows:

To the City:
Public Utilities Department
Water Division
801 W. San Mateo
Santa Fe, NM 87504

To the Contractor:
Sub Surface Contracting Inc.
27A Paseo de River
Santa Fe, NM 87507

30. Authority.

If Contractor is other than a natural person, the individual(s) signing this Agreement on behalf of Contractor represents and warrants that he or she has the power and authority to bind Contractor, and that no further action, resolution, or approval from Contractor is necessary to enter into a binding contract.

IN WITNESS WHEREOF, the Parties have executed this Agreement as of the date of the signature by the required approval authorities below.

CITY OF SANTA FE:

ALAN WEBBER, MAYOR

DATE: Aug 4, 2021

CONTRACTOR:
SUB SURFACE CONTRACTING INC.

NAME

General Manager
TITLE

DATE: 6-17-2021

CRS# 02104256000
Registration # 46991

ATTEST:

Kristine Mihelcic
Kristine Mihelcic (Aug 4, 2021 14:46 MDT)

KRISTINE BUSTOS MIHIELCIC, CITY CLERK
GB MTG 07/28/2021

CITY ATTORNEY'S OFFICE:

Marcos Martinez
Marcos Martinez (Jun 16, 2021 16:07 MDT)

SENIOR ASSISTANT CITY ATTORNEY

APPROVED FINANCES:

Mary McCoy

MARY MCCOY, FINANCE DIRECTOR

5050395.572970 AJH
Org. Name/Org#. AJH

WTR1950536

GB Subsurface CW Contract 3202777 Amend 2 Full Packet For Purchasing Budget FD Sig 11Nov2024

Interim Agreement Report 2024-11-12

Created:	2024-11-12
By:	JAMES EDWARDS (jwedwards@santafenm.gov)
Status:	Out for Signature
Transaction ID:	CBJCHBCAABAApjATGnLxq3NOmSG08YbSOyQhD_Zc_zuk

Agreement History

Agreement history is the list of the events that have impacted the status of the agreement prior to the final signature. A final audit report will be generated when the agreement is complete.

"GB Subsurface CW Contract 3202777 Amend 2 Full Packet For Purchasing Budget FD Sig 11Nov2024" History

Document created by JAMES EDWARDS (jwedwards@santafenm.gov)

2024-11-12 - 2:56:51 PM GMT- IP address: 97.182.23.177

Document emailed to ajhopkins@santafenm.gov ajhopkins@santafenm.gov (ajhopkins@santafenm.gov) for signature

2024-11-12 - 2:59:45 PM GMT

Powered by Adobe Acrobat Sign

GB Subsurface CW Contract 3202777 Amend 2 Full Packet For Purchasing Budget FD Sig 11Nov2024

Final Audit Report 2024-11-12

Created:	2024-11-12
By:	Kristy Miera (kamiera@santafenm.gov)
Status:	Signed
Transaction ID:	CBJCHBCAABAAhzi69-TfuhrCTZ5ZMtKTWKEN9Z-a9J0O

"GB Subsurface CW Contract 3202777 Amend 2 Full Packet For Purchasing Budget FD Sig 11Nov2024" History

Document created by Kristy Miera (kamiera@santafenm.gov)
2024-11-12 - 5:31:21 PM GMT- IP address: 63.232.20.2

Document sent to ALEXIS LOTERO (aclotero@santafenm.gov) and ajhopkins@santafenm.gov ajhopkins@santafenm.gov (ajhopkins@santafenm.gov) for signature. One of them to sign
2024-11-12 - 5:32:28 PM GMT

Email viewed by ALEXIS LOTERO (aclotero@santafenm.gov)
2024-11-12 - 5:41:58 PM GMT- IP address: 104.47.64.254

Document e-signed by ALEXIS LOTERO (aclotero@santafenm.gov)
Signature Date: 2024-11-12 - 5:42:33 PM GMT - Time Source: server- IP address: 63.232.20.2

Agreement completed.
2024-11-12 - 5:42:33 PM GMT

Powered by Adobe Acrobat Sign

CITY OF SANTA FE

Memorandum

Date: October 8, 2024

To: Governing Body, Public Works and Utilities Committee, Finance Committee

From: Romella Glorioso-Moss, PhD, CPM, Complete Streets Capital Projects Manager

Via: Regina Wheeler, Public Works Department Director RW

RE: New Mexico Department of Transportation Project Fund Grant Agreement - Project Control Number HW2LP50060

EXECUTIVE SUMMARY:

The Resolution accepts a Transportation Project Fund Grant administered by the New Mexico Department of Transportation ("NMDOT") and approves entering into a Grant Agreement, Project Control Number HW2LP50060, to reconstruct the pavement of Buckman Road from Camino De Las Crucitas to Paseo Nopal, a total distance of 1.7 miles. The anticipated total for the project is two million, three hundred thousand dollars ($2,300,000). The Grant Agreement establishes that NMDOT's share of the total amount will be two million, one hundred eighty-five dollars ($2,185,000), which is ninety-five percent (95%) of the project's total cost. The City of Santa Fe's ("City's") share of the total amount will be one hundred fifteen thousand dollars ($115,000), which is five percent (5%) of the project's total cost. Any dollars spent above the anticipated total of two million, three hundred thousand dollars ($2,300,000) will be paid by the City.

BACKGROUND:

Since 2021, the pavement reconstruction of Buckman Road has been a top priority identified by the City's Bicycling and Pedestrian Advisory Committee. Buckman Road is a key bicycle route into the city and to La Tierra Trails and allows cyclists to avoid the at-grade crossings along New Mexico State Road 599. This project has been prioritized by the Governing Body in the Impact Fees Capital Improvements Plan Fiscal Year 2026-2030, Resolution No. 2024-28. The pavement design funding was obtained in 2022 via the Local Government Road Fund, Resolution No. 2022-50 and in May 2024, the City's Public Works Department applied for the Transportation Project Fund Grant.

The proposed grant agreement, included in the Resolution as Attachment A, terminates on June 30, 2027. NMDOT requires a resolution documenting acceptance of this funding, approved by the Governing Body.

ATTACHMENTS:

Resolution
FIR

CITY OF SANTA FE, NEW MEXICO

RESOLUTION NO. 2024 -__

INTRODUCED BY:

Councilor Michael Garcia

A RESOLUTION

ACCEPTING A GRANT FROM THE TRANSPORTATION PROJECT FUND PROGRAM ADMINISTERED BY NEW MEXICO DEPARTMENT OF TRANSPORTATION AND ENTERING INTO GRANT AGREEMENT CONTROL NUMBER HW2LP50060.

WHEREAS, the City of Santa Fe ("City") and the New Mexico Department of Transportation ("NMDOT") wish to enter a Transportation Project Fund Grant Agreement, control number HW2LP50060, under the Transportation Fund Program for a local road project, incorporated as Exhibit A, the purpose of which is the road and pavement reconstruction of Buckman Road; and

WHEREAS, the NMDOT and City estimate the total cost of the project will be two million, three hundred thousand dollars ($2,300,000), which the Grant Agreement provides will be funded in proportional share by the parties hereto as follows:

1. NMDOT's share shall be ninety-five percent (95%) or two million, one hundred eighty-five thousand dollars ($2,185,000); and

2. The City's proportional matching share shall be five percent (5%) or one hundred

fifteen thousand dollars $115,000.

WHEREAS, the Grant Agreement provides that the City shall pay all costs that exceed the total project cost of two million, three hundred thousand dollars ($2,300,000).

NOW, THEREFORE, BE IT RESOLVED BY THE GOVERNING BODY OF THE CITY OF SANTA FE that the fiscal year 2025 Transportation Project fund Grant Agreement, Project Control Number HW2LP50060, included as Exhibit A, as part of a program administered under the Transportation Project Fund Program, for Buckman Road's reconstruction and pavement, is hereby approved.

THEREFORE, BE IT FURTHER RESOLVED, that the project for this grant agreement has a priority standing, as is established in Resolution No. 2024-28;

THEREFORE, BE IT FURTHER RESOLVED, that the cooperative agreement terminates on June 30, 2027, and the City incorporates all the agreements, covenants, and understandings between the parties hereto concerning the subject matter hereof, and all such covenants, agreements and understandings have been merged into the written agreement.

BE IT FURTHER RESOLVED that the City shall accept responsibility for the Project; assumes the lead role in design development and construction of the Project; agrees to the terms, conditions, and certification and reporting requirements of the Transportation Project Fund Grant Agreement; and assumes ownership, liability, and maintenance responsibilities for all amenities related to the completion of the Project.

PASSED, APPROVED, and ADOPTED this _____day of _____, 2024.

_____

ALAN WEBBER, MAYOR

ATTEST:

_____

GERALYN CARDENAS, INTERIM CITY CLERK

APPROVED AS TO FORM:

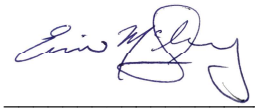

_____

ERIN K. McSHERRY, CITY ATTORNEY

EXHIBIT A

Contract No. _____
Vendor No. 0000054360
Control No. HW2LP50060

TRANSPORTATION PROJECT FUND
GRANT AGREEMENT

This Agreement is between the **New Mexico Department of Transportation** (Department) and **City of Santa Fe** (Public Entity). This Agreement is effective as of the date of the last party to sign it on the signature page below.

Pursuant to NMSA 1978, Sections 67-3-28 and 67-3-78 and 18.27.6 NMAC, the parties agree as follows:

1. Purpose.
The purpose of this Agreement is to provide Transportation Project Funds (TPF) to the Public Entity for the following project scope **Buckman Road Reconstruction-Pavement reconstruction of Buckman Road for approximately 1.1 miles and mill and overlay for 0.6 miles. The road will be brought up to current standards. The width of the road will remain at 22' wide. The shoulders will be racked to match the asphalt.** (Project or CN LP50060). This Agreement specifies and delineates the rights and duties of the parties.

2. Project Funding.
a. The estimated total cost for the Project is Two Million Three Hundred Thousand Dollars and No Cents **($2,300,000.00)** to be funded in proportional share by the parties as follows:

Project Funding	Department Share	Public Entity Share	Total Cost
Funding Source 1	**95%**	**5%**	
FY 2025 Transportation Project Fund **For the purpose stated above in Section 1.**	**$2,185,000.00**	**$115,000.00**	**$2,300,000.00**
Total Transportation Project Funds			**$2,300,000.00**

b. The Public Entity is responsible for all costs that exceed Project funding.
c. All allocated funds must be spent by **June 30, 2027**.
d. The Public Entity represents that no federal funds will be used to finance the Project.
e. The Public Entity must repay Project funding to the Department if:
   1. The Project is cancelled or partially performed.

2. A final audit conducted by the Department at Project completion determines the following: an overpayment, unexpended monies or ineligible expenses.

3. The Department:

a. Shall distribute the funds, identified in Section 2a1, in a lump sum to the Public Entity after:
   1. The Department has received this Agreement fully executed with a Resolution of Sponsorship attached as Exhibit B.
   2. Receipt of a letter requesting funds, which includes the following Project documents: Notice of Award/Work Order and Notice to Proceed for the Project.
   3. If a Department's or another entity's right-of-way is involved, a permit or letter of approval/authorization, from the entity with jurisdiction over the Project right-of-way.

b. Will not:
   1. Perform any detailed technical reviews of Project scope, cost, budget, schedule, design or other related documents;
   2. Have any involvement in the construction phase;
   3. Be involved in permit preparation or the review or coordination with regulatory agencies.
   4. Conduct periodic assurance inspections or comparison material testing.
   5. Participate in resolving bidding and contract disputes between the Public Entity and contractors.

c. May perform Project monitoring that might consist of the following:
   1. Review of Project status to ensure that project goals, objectives, performance requirements, timelines, milestone completion budgets and other guidelines are being met.
   2. Request written Project status reports.
   3. Conduct a review of the Local Entity's performance and administration of the Project funds identified in Section 2a.

d. Reserves the right, upon receipt of the Public Entity's Certification of Completion, Exhibit A, to request additional documents that demonstrate Project completion.

e. If required, the District Engineer or designee, will conduct a Project review to determine if permit is required from the Department. If there is a determination that a permit is not required, a letter of approval and authorization will be forwarded to the Public Entity.

4. The Public Entity Shall:

a. Act in the capacity of lead agency for the purpose as described in Section 1.

b. Procure and award any contract in accordance with applicable procurement law, rules, regulations and ordinances.

c. Be responsible for all design activities necessary to advance the Project to construction and coordinate construction.

d. Unless otherwise specified in a letter of authorization or permit, design and construct the Project in accordance with the Public Entity's established design standards.

e. Have sole responsibility and control of all project phases and resulting quality of the completed work.

f. If the Project is in full or on a portion of a state highway, on a Department right of way or a National Highway System route:

1. Obtain from the Department a permit in accordance with 18.31.6.14 NMAC, State Highway Access Management Requirements or a letter of authorization; and
2. Design and construct the Project in accordance with standards established by the Department.

g. Adopt a written resolution of Project support that includes a commitment to funding, ownership, liability and maintenance. The resolution is attached to this Agreement as Exhibit B.
h. Consider placing pedestrian, bicycle and equestrian facilities in the Project design in accordance with NMSA 1978, Section 67-3-62.
i. Comply with any and all state, local and federal regulations including the Americans with Disabilities Act (ADA) and laws regarding noise ordinances, air quality, surface water quality, ground water quality, threatened and endangered species, hazardous materials, historic and cultural properties, and cultural resources.
j. Be responsible for all permit preparation, review and coordination with regulatory agencies.
k. Cause all designs, plans, specifications and estimates to be performed under the direct supervision of a Registered New Mexico Professional Engineer, in accordance with NMSA 1978 Section 61-23-26.
l. Allow the Department to perform a final inspection of the Project and all related documentation to determine if the Project was constructed in accordance with the provisions of this Agreement. At the Department's request, provide additional documentation to demonstrate completion of the required terms and conditions.
m. Meet with the Department, as needed, or provide Project status reports within thirty (30) days of request.
n. Within 60 days after Project completion, provide the Certification of Completion, which is attached as Exhibit A, that it has complied with the requirements of 18.27.6 NMAC and this Agreement.
o. Upon completion, maintain all the Public Entity's facilities constructed or reconstructed under this Agreement.

5. Both Parties Agree:

a. Upon termination of this Agreement any remaining property, materials, or equipment belonging to the Department will be accounted for and disposed of by the Public Entity as directed by the Department.
b. Unless otherwise indicated in a letter of authorization, the Project will not be incorporated into the State Highway System and the Department is not assuming maintenance responsibility or liability.
c. Pursuant to NMSA 1978, Section 67-3-78, Transportation Project Funds granted under this provision cannot be used by the Public Entity to meet a required match under any other program.
d. The requirements of 18.27.6 NMAC are incorporated by reference.
e. The inability to properly complete and administer the Project may result in the Public Entity being denied future grant funding.

6. Term.

This Agreement becomes effective upon signature of all parties. The effective date is the date when the last party signed the Agreement on the signature page below. This Agreement terminates on the earliest of the following dates: (a) Department receipt of the Certification of Completion or (b) **June 30, 2027**. In the event an extension to the term is needed, the Public Entity shall provide written notice along with detailed justification to the Department sixty (60) days prior to the expiration date to ensure timely processing of an Amendment. Neither party shall have any obligation after said date except as stated in Sections 2e, 4l, 4n and 7.

7. Termination.
If the Public Entity fails to comply with any provision of this Agreement, the Department may terminate this Agreement by providing thirty (30) days written notice. This Agreement may also be terminated pursuant to Section 15. Neither party has any obligation after termination, except as stated in Sections 2e, 4l, 4n and 7.

8. Third Party Beneficiary.
It is not intended by any of the provisions of any part of this Agreement to create in the public or any member of the public a third party beneficiary or to authorize anyone not a party to the Agreement to maintain a suit(s) for wrongful death(s), bodily and/or personal injury(ies) to person(s), damage(s) to property(ies), and/or any other claim(s) whatsoever pursuant to the provisions of this Agreement.

9. New Mexico Tort Claims Act.
As between the Department and Public Entity, neither party shall be responsible for liability incurred as a result of the other party's acts or omissions in connection with this Agreement. Any liability incurred in connection with this Agreement is subject to the immunities and limitations of the New Mexico Tort Claims Act, NMSA 1978, Section 41-4-1, *et seq*.

10. Contractors Insurance Requirements.
The Public Entity shall require contractors and subcontractors hired for the Project to have a general liability insurance policy, with limits of liability of at least $1,000,000 per occurrence. The Department is to be named as an additional insured on the contractors and subcontractor's policy and a certificate of insurance must be provided to the Department and it must state that coverage provided under the policy is primary over any other valid insurance.

To the fullest extent permitted by law, the Public Entity shall require the contractor and subcontractors to defend, indemnify and hold harmless the Department from and against any liability, claims, damages, losses or expenses (including but not limited to attorney's fees, court costs, and the cost of appellate proceedings) arising out of or resulting from the negligence, act, error, or omission of the contractor and subcontractor in the performance of the Project, or anyone directly or indirectly employed by the contractor or anyone for whose acts they are liable in the performance of the Project.

11. Scope of Agreement.
This Agreement incorporates all the agreements, covenants, and understandings between the parties concerning the subject matter. All such covenants, agreements, and understandings have been merged into this written Agreement. No prior Agreement or understandings, verbal or

otherwise, of the parties or their agents will be valid or enforceable unless embodied in this Agreement.

12. Terms of this Agreement.
The terms of this Agreement are lawful; performance of all duties and obligations must conform with and not contravene any state, local, or federal statutes, regulations, rules, or ordinances.

13. Legal Compliance.
The Public Entity shall comply with all applicable federal, state, local, and Department laws, regulations and policies in the performance of this Agreement, including, but not limited to laws governing civil right, equal opportunity compliance, environmental issue, workplace safety, employer-employee relations and all other laws governing operations of the workplace. The Public Entity shall include the requirements of this Section 13 in each contract and subcontract at all tiers.

14. Equal Opportunity Compliance.
The parties agree to abide by all federal and state laws and rules and regulations, and executive orders of the Governor of the State of New Mexico, pertaining to equal employment opportunity. In accordance with all such laws and rules and regulations, and executive orders of the Governor of the State of New Mexico, the parties agree to assure that no person in the United States will, on the grounds of race, color, national origin, ancestry, sex, sexual preference, age or handicap, be excluded from employment with, or participation in, any program or activity performed under this Agreement. If the parties are found to not be in compliance with these requirements during the term of this Agreement, the parties agree to take appropriate steps to correct these deficiencies.

15. Appropriations and Authorizations.
The terms of this Agreement are contingent upon sufficient appropriations and authorizations being made by the governing board of the Public Entity, the Legislature of New Mexico for performance of the Agreement. If sufficient appropriations and authorizations are not made by the Public Entity and the Legislature this Agreement will terminate upon written notice being given by one party to the other. The Department and Public Entity are expressly not committed to expenditure of any funds until such time as they are programmed, budgeted, encumbered, and approved for expenditure.

16. Accountability of Receipts and Disbursements.
There shall be strict accountability for all receipts and disbursements relating to this Agreement. The Public Entity shall maintain all records and documents relative to the Project for a minimum of five (5) years after completion of the Project. The Public Entity shall furnish the Department and State Auditor, upon demand, any and all such records relevant to this Agreement. If an audit finding determines that specific funding was inappropriate or not related to the Project, the Public Entity shall reimburse that portion to the Department within thirty (30) days of written notification. If documentation is insufficient to support an audit by customarily accepted accounting practices, the expense supported by such insufficient documentation must be reimbursed to the Department within thirty (30) days.

17. Severability.
In the event that any portion of this Agreement is determined to be void, unconstitutional or otherwise unenforceable, the remainder of this Agreement will remain in full force and effect.

18. Applicable Law.
The laws of the State of New Mexico shall govern this Agreement, without giving effect to its choice of law provisions. Venue is proper in a New Mexico Court of competent jurisdiction in accordance with NMSA 1978, Section 38-3-1(G).

19. Amendment.
This Agreement may be amended by an instrument in writing executed by the parties.

The remainder of this page is intentionally left blank.

In witness whereof, each party is signing this Agreement on the date stated opposite that party's signature.

NEW MEXICO DEPARTMENT OF TRANSPORTATION

By:_____ Date: _____
Cabinet Secretary or Designee

Approved as to form and legal sufficiency by the New Mexico Department of Transportation's Office of General Counsel

By:_____ Date: _____
Assistant General Counsel

City of Santa Fe

By:_____ Date: _____
Alan Webber, City Mayor

Attest

By:_____ Date: _____
Geralyn Cardenas, Interim City Clerk

Approved as to form and legal sufficiency

By: Marcos Martinez
Marcos Martinez (Oct 10, 2024 11:16 MDT) Date: Oct 10, 2024
Marcos Martinez, Senior Assistant City Attorney

Approved for finances

By:_____ Date: _____
Emily Oster, Finance Director

EXHIBIT A

CERTIFICATION OF PROJECT COMPLETION

Public Entity:

Control No. LP50060

I, _____, in my capacity as _____ of _____ certify in regard to Control No. **LP50060**:

1. That the Public Entity has complied with the terms and conditions of the requirements under this Agreement and 18.27.6 NMAC.
2. That all work in was performed in accordance with the Agreement.
3. That the total Project cost of _____, with New Mexico Department of Transportation 95% share of _____ and the Public Entity share of _____ is accurate, legitimate, and appropriate for the Project.
4. That the Project was completed on _____ of _____, 20____

In Witness Whereof, _____ in his/her capacity as_____ of _____ certify that the matters stated above are true to his/her knowledge and belief.

City of Santa Fe

By:_____ Date: _____

Title: _____ Date: _____

ATTEST:

By:_____ Date: _____

Public Entity Clerk

When completed, send Certification of Project Completion to the District Coordinator, New Mexico Department of Transportation.

EXHIBIT B

RESOLUTION

City of Santa Fe

PARTICIPATION IN TRANSPORTATION PROJECT FUND PROGRAM ADMINISTERED BY NEW MEXICO DEPARTMENT OF TRANSPORTATION

WHEREAS, the **City of Santa Fe** and the New Mexico Department of Transportation have entered into a grant agreement under the Transportation Fund Program for a local road project.

WHEREAS, the total cost of the project will be $2,300,000 to be funded in proportional share by the parties hereto as follows:

a. New Mexico Department of Transportation's share shall be 95% or $2,185,000.00

and

b. **City of Santa Fe**'s proportional matching share shall be 5% or $115,000.00

TOTAL PROJECT COST IS $2,300,000.00

The **City of Santa Fe** shall pay all costs, which exceed the total amount of $2,300,000.00**.**

Now therefore, be it resolved in official session that **City of Santa Fe** determines, resolves, and orders as follows:

That the project for this Cooperative agreement is adopted and has a priority standing.

The agreement terminates on June 30, 2027 and the **City of Santa Fe** incorporates all the agreements, covenants, and understandings between the parties hereto concerning the subject matter hereof, and all such covenants, agreements and understandings have been merged into the written agreement.

Now therefore, be it resolved by the **City of Santa Fe** to enter into Cooperative Agreement for Project Control Number **LP50060** with the New Mexico Department of Transportation for the TPF Program for year 2025 for Buckman Road Reconstruction-Pavement reconstruction of Buckman Road for approximately 1.1 miles and mill and overlay for 0.6 miles. The road will be brought up to current standards. The width of the road will remain at 22' wide. The shoulders will be racked to match the asphalt.- within the control of the **City of Santa Fe** in New Mexico.

(Appropriate Signatures below (Council, Commission, School Board, Tribe, Pueblo, Nation, etc.)

_____ _____

(PRINTED NAME, POSITION) DATE

_____ _____

(PRINTED NAME, POSITION) DATE

FIR No. 10628.1

FISCAL IMPACT REPORT

General Information:

(Check) Bill: _____ Resolution: X

Short Title(s): Acceptance of Transportation Project Fund Grant Agreement to Reconstruct Buckman Road Pavement

Sponsor(s): Councilor Michael Garcia

Reviewing Department(s): Public Works Department

Staff Completing FIR: Romella Glorioso-Moss Date: 10/08/2024 Phone: (505) 955-6623

Reviewed by City Attorney: _____ Date: Oct 31, 2024

Reviewed by Finance Director: Emily K. Oster Date: Nov 1, 2024

Summary:

This Resolution accepts a Transportation Project Fund grant, administered by the New Mexico Department of Transportation ("NMDOT") for the pavement reconstruction of Buckman road from Camino De Las Crucitas to Paseo Nopal, a total distance of 1.7 miles. The project is identified as Project Control Number HW2LP50060, and the grant amount is two million, three hundred thousand dollars ($2,300,000) . The City of Santa Fe ("City") will contribute one hundred fifteen thousand dollars ($115,000), or five percent (5%) of the total project cost. NMDOT will contribute two million, one hundred eighty-five thousand dollars ($2,185,000), or ninety-five percent (95%) of the total project cost. This funding agreement terminates on June 30, 2027.

Departments Affected:

Public Works Department

Consequences of Not Enacting Legislation:

If this legislation is not adopted, the City will not receive NMDOT's funding share from the Transportation Project Fund in the amount of $2,185,000, meaning the City will not receive the additional funding needed to complete the pavement reconstruction of Buckman road. In addition, NMDOT will not prioritize any future application for project funding by the City.

Conflict, Duplication, Companionship, or Relationship to Other Legislation:

The proposed resolution relates to Resolution No. 2022-50, which accepted a Local Government Road Fund to design the project, Resolution No. 2024-12 Maintenance of Bicycle and Pedestrian Infrastructure, and Resolution No. 2024-28 the Impact Fees Capital Improvements Plan for Fiscal Year 2026-2030.

Performance and Administrative Implications:

Complete Streets Division staff will need to administer the project, including the bidding process. The construction manager will ensure the project is completed within the funding agreement term and will make

sure the project complies with the funding agreement, and will also submit reimbursements to NMDOT.

Fiscal Implications:
The City of Santa Fe's funding share is five percent (5%) or one hundred fifteen thousand dollars ($115,000).

Fiscal Impact

_____ Check here if no fiscal impact

Expenditures

Expenditure Type	FYE 25	FYE ___	FYE ___	Require BAR (Y/N)	Recurring (R) or Non-recurring (NR)	Fund	3-Year Total Cost
Personnel and Benefits*	$	$	$				
Capital Outlay	$	$	$	Y	NR	Road Impact Fees	$ $115,000
Contractual/ Professional Services	$	$	$				
Operating	$	$	$				$
Total:	$	$	$				$ 115,000

*This includes all staff time associated with executing the job functions of the proposed legislation.

Expenditure Narrative:

The City's five percent (5%) share of funding for the project is one hundred fifteen thousand dollars ($115,000), which will come out of Road Impact Fees fund. Road impact fees can only be used for roadway improvements.

Revenue

Revenue Type	FYE 25	FYE __	FYE __	Recurring (R) or Non-recurring (NR)	Fund
General Fund	$	$	$		
Special Revenue	$	$	$		
CIP	$	$	$		
Enterprise	$	$	$		
Internal Service	$	$	$		
Trust and Agency	$	$	$		
Federal	$	$	$		
Other (State)	$2,185,000	$	$	NR	NMDOT
Total	$2,185,000	$	$		

Revenue Narrative:

This revenue of two million, one hundred eighty-five thousand dollars ($2,185,000) is NMDOT's 95% share of the funding to reconstruct the pavement of Buckman Road.

Signature: Regina Wheeler (Nov 1, 2024 14:37 MDT)

Email: rawheeler@santafenm.gov

Signature:

Email: rsglorioso-moss@santafenm.gov

CITY OF SANTA FE

Memorandum

Date: October 22, 2024

To: Governing Body, Quality of Life Committee, Public Works and Utilities Committee, Finance Committee

From: Regina Wheeler, Public Works and Utilities Department Director
Marci Eannarino, Legislation and Policy Innovation Manager
Christine M. Spiers, Legislative Assistant

Via: Erin K. McSherry, City Attorney
Randy Randall, Interim City Manager

RE: 2025 Legislative Priorities

EXECUTIVE SUMMARY:
The proposed resolution establishes the City's priorities for the 2025 Legislative Session. The resolution includes citywide capital outlay requests, district capital outlay requests, and policy priorities of the Governing Body.

The capital outlay requests this year are those adopted as the top five requests in the City's ICIP list. Specifically, they include the following items: 1) any statewide capital outlay initiatives associated with homelessness and housing, 2) replacement of the Paseo Real Wastewater Reclamation Facility, 3) the Arroyo De Los Chamisos/Richards Avenue projects, 4) the Santa Fe Regional Airport Terminal Expansion Phase II, and 5) Midtown Redevelopment Infrastructure improvements.

This resolution also includes district-specific capital outlay requests as follows: funding for the construction of a replacement of the Santa Fe River Pedestrian Bridge at Shelby St. in District 1, funding for the Ragle Park Baseball Field Upgrades in District 2, funding for the Municipal Recreation Complex Irrigation System Upgrades to conserve water and steward turf in District 3, and funding for the Rufina Street and Lopez Lane Intersection Improvements in District 4.

The policy priorities include, but are not limited to, the expansion of affordable housing availability; expansion of services for homeless families and individuals; support for the City and Santa Fe County partnership, "CONNECT"; support for economic mobility efforts related to community and economic development; support for violence intervention programs; support for addressing fentanyl as a community health crisis through meaningful partnerships between State, County and City agencies; support for water conservation, recycling, and other environmental

priorities; elimination of the three percent property tax increase on non-owner-occupied residences, and a statewide business licensing system.

BACKGROUND:
Every year the Governing Body adopts capital outlay and policy priorities for the Legislature's consideration during the next legislative session. The City has successfully lobbied for numerous capital outlay projects and policy issues in the past. Some items included in the resolution have been policy priorities for multiple years and have either never been considered by the legislature, died in committee at some point in the process, or were vetoed by the Governor.

ATTACHMENTS:
Resolution
Fiscal Impact Report

CITY OF SANTA FE, NEW MEXICO

RESOLUTION NO. 2024-

INTRODUCED BY:

Mayor Alan Webber

A RESOLUTION

ESTABLISHING THE CITY OF SANTA FE'S PRIORITIES FOR CONSIDERATION BY THE NEW MEXICO STATE LEGISLATURE DURING THE 57TH LEGISLATURE – STATE OF NEW MEXICO – FIRST SESSION, 2025.

WHEREAS, the 60-day Legislative Session ("Legislative Session") of the 2025 New Mexico State Legislature ("Legislature") begins on January 21, 2025, and ends on March 22, 2025; and

WHEREAS, the Governing Body desires to establish City of Santa Fe ("City") legislative priorities to be considered by the City's legislative delegation and the Legislature; and

WHEREAS, the Governing Body's legislative priorities include City-wide capital outlay priorities, statutory priorities, general fund priorities, City Council District capital outlay priorities, and other legislative priorities beneficial to the City to be pursued during the Legislative Session.

NOW, THEREFORE, BE IT RESOLVED BY THE GOVERNING BODY OF THE CITY OF SANTA FE that the Governing Body hereby adopts priorities for the Legislative Session, consistent with Resolution No. 2024-28 (adopting the City's Infrastructure Capital Improvements Plan for 2026-2030) and as specified below.

1. From any statewide capital outlay initiative associated with homelessness and housing, the City requests funding in the amount of **$5,000,000** for permanent and transitional housing to end veteran, youth, and chronic homelessness;

2. From any statewide capital outlay initiative associated with water and wastewater, the City requests funding in the amount of **$4,500,000** for the replacement Paseo Real Wastewater Reclamation Facility;

3. From any statewide capital outlay initiative associated with roads and transportation, the City requests funding in the amount of **$2,500,000** for the Arroyo De Los Chamisos/Richards Avenue project.

4. From any statewide capital outlay initiative associated with airports, regional transportation and economic development, the City requests funding in the amount of **$10,000,000** for the Santa Fe Regional Airport Terminal Expansion Phase II.

5. From any statewide capital outlay initiative associated with economic development, affordable housing, and urban redevelopment, the City requests funding in the amount of **$5,000,000** for the Midtown Redevelopment Infrastructure Improvements.

BE IT FURTHER RESOLVED that, as is consistent with Resolution No. 2022-12 (establishing next steps for the Midtown Property), the Governing Body requests the Legislature enact a Joint Resolution ratifying and approving the transfer of one or more tracts of City-owned real property to the State of New Mexico Department of Public Safety in trade and exchange for the transfer of multiple tracts of State-owned real property to the City of Santa Fe, New Mexico for the Midtown Redevelopment Project.

BE IT FURTHER RESOLVED that the Governing Body supports legislation that funds the New Mexico Department of Transportation for safety and multimodal improvements and pavement rehabilitation of New Mexico 475 (being Hyde Park Road) and Cerrillos Road Phase III Construction.

BE IT FURTHER RESOLVED that the Governing Body supports any legislation that

enhances the Downtown Improvement District of Santa Fe including such items as revised streetscapes, improved signage, placemaking, Americans with Disabilities Act considerations, and litter collection.

BE IT FURTHER RESOLVED that the Governing Body renews its request that the Legislature support legislation that promotes water reuse and water planning and other legislation designed to improve overall sustainability at the state and local level.

BE IT FURTHER RESOLVED that the Governing Body re-affirms its support for and endorsement of any legislation that would support municipal recycling programs and other programs that support recycling market development.

BE IT FURTHER RESOLVED that the Governing Body hereby establishes the following City Council District capital outlay legislative funding priorities for improvements of citywide infrastructure for consideration by the Legislature during the Legislative Session:

1. For a capital outlay initiative located within **City Council District 1**, **$1,000,000** to construct a replacement Santa Fe River Pedestrian Bridge at Shelby St.

2. For a capital outlay initiative located within **City Council District 2**, **$1,000,000** for the Ragle Park Baseball Field Upgrades.

3. For a capital outlay initiative located within **City Council District 3**, **$1,000,000** for the Municipal Recreation Complex Irrigation System Upgrades to conserve water and steward turf.

4. For a capital outlay initiative located within **City Council District 4**, **$1,000,000** for Rufina Street & Lopez Lane Intersection Improvements.

BE IT FURTHER RESOLVED that, consistent with Resolution No. 2023-32, the Governing Body hereby establishes the following capital outlay legislative funding priority for any initiative associated with public safety: **$1,150,000** to plan, design, and construct much needed renovations of the Municipal Court building including adding security measures.

BE IT FURTHER RESOLVED that the Governing Body supports and endorses any legislation that expressly provides that legislative appropriations are not subject to extra-statutory

limitations.

BE IT FURTHER RESOLVED that the Governing Body supports legislation to place a constitutional referendum on the ballot to permit municipalities and counties to restrict firearms to the extent constitutionally permissible, while continuing to disallow municipalities and counties from regulating firearms in a manner that is less restrictive than the State.

BE IT FURTHER RESOLVED that the Governing Body supports and endorses the following firearms legislation:

1. Creation of a New Mexico Office of Gun Violence Prevention;
2. Funding for regional and/or local collaboration to address youth gun violence;
3. Raising the age of purchase for certain rifles;
4. Placing a ban on assault-style weapons;
5. Creating mandatory minimum sentencing for illegal firearms trafficking; and
6. Enhancing the penalty for the illegal possession of a firearm during any crime, including during the illegal sale of drugs;
7. Updating the Extreme Risk Firearm Protection Order Act, or "Red Flag" statute, to allow law enforcement to act as a petitioner.

BE IT FURTHER RESOLVED that the Governing Body supports continued funding for the Violence Intervention Program fund, including money for operational capacity.

BE IT FURTHER RESOLVED that the Governing Body supports and endorses funding for interventions and responses to domestic violence, sexual assault, and human trafficking, including the expansion of a coordinated, comprehensive approach that benefits both the survivor and the perpetrator.

BE IT FURTHER RESOLVED that the Governing Body re-affirms its support for and endorsement of the establishment of the Santa Fe County Detox Center that would serve the residents of Santa Fe and northern New Mexico.

BE IT FURTHER RESOLVED that, as is consistent with Resolution No. 2022-47

(supporting state and federal legislation protecting the right to a safe abortion), the Governing Body endorses any legislation that supports reproductive rights and that would codify the right to safe abortion into law.

BE IT FURTHER RESOLVED that, as is consistent with initiatives such as what is contained in Resolution No. 2024-29, the Governing Body supports the rights of the LGBTQIA+ population such that every individual, regardless of the individual's reproductive choices, sexual orientation, or gender identity, can live, work, and pursue their dreams free from discrimination and prejudice and supports any legislation that preserves and protects the rights of the LGBTQIA+ community.

BE IT FURTHER RESOLVED that the Governing Body supports and endorses any legislation and allocation of funding designed to interrupt intergenerational cycles of poverty, such as appropriations for operations of a state-wide pilot program that provides a monthly, guaranteed income.

BE IT FURTHER RESOLVED that the Governing Body supports and endorses funding mental health and behavioral health programs focused on addressing the needs of residents and individuals struggling with mental illness and/or substance abuse or addiction, including the expansion or augmentation of treatment opportunities and facilities to support that treatment.

BE IT FURTHER RESOLVED that the Governing Body endorses any legislation that supports meaningful partnerships between State, county, and municipal governmental agencies to address fentanyl as a health crisis by removing barriers to services for those struggling with addiction, and supporting the coordination of response efforts, and funding such initiatives.

BE IT FURTHER RESOLVED that, as is consistent MOA No. 2020-0629, the Governing Body supports any legislation dedicated to the City and Santa Fe County partnership program, "CONNECT," defined by the City and County as "a network of navigators at clinics, community organizations, and city and county programs," which has successfully connected approximately ten thousand (10,000) Santa Fe County residents with resources such as housing, food, transportation, childcare, and other essential needs.

BE IT FURTHER RESOLVED that the Governing Body supports legislation that improves and affirms the City's multicultural initiatives and programs, including but not limited to Mariachi Competitions, Spanish-Language Music Festivals, Powwow Grounds, Spanish-Language literary festivals, Sister City Student Exchange programs, , culture-specific TED Talks, and that uplifts the pride and acknowledgement of the City's diverse history, specifically as it relates to associated community development.

BE IT FURTHER RESOLVED that the Governing Body re-affirms its support for and endorsement of any legislation that supports the development and construction of affordable and workforce housing to decrease and/or subsidize the cost of housing for residents of Santa Fe and New Mexico.

BE IT FURTHER RESOLVED that the Governing Body supports and endorses any legislation that increases housing availability, including transitional housing options tailored to the individual's needs, and expands available social services for homeless families and individuals, including those who are chronically homeless, veterans experiencing homelessness, and young people experiencing homelessness, as well as those living in outdoor unsupervised encampments.

BE IT FURTHER RESOLVED that the Governing Body re-affirms its support for and endorsement of any legislation that slows down the timeline for eviction, connects tenants to rental assistance resources, and improves opportunities for mediation between renters and landlords.

BE IT FURTHER RESOLVED that, as is consistent with Resolution No. 2022-52 (affirming the partnership of the City and Santa Fe County to develop strategies to end homelessness), the Governing Body supports and endorses appropriations for the expansion of program staff that supports the goals of housing preservation and homelessness prevention, emergency shelter, building housing units, individual housing vouchers, project-based housing vouchers, supportive services, and system infrastructure;

BE IT FURTHER RESOLVED that the Governing Body supports and endorses

appropriations for mental health and behavioral health programs, including the development of the Santa Fe County's Youth Behavioral Health Center and the La Salla Center, focused on addressing the needs of residents and individuals struggling with mental illness and/or substance abuse or addiction, including the expansion or augmentation of treatment opportunities and facilities to support that treatment.

BE IT FURTHER RESOLVED that the Governing Body re-affirms its support for and endorsement of any legislation that replenishes and seeks a recurring funding source to support New Mexico Mortgage Finance Authority's Housing Trust Fund.

BE IT FURTHER RESOLVED that the Governing Body supports and endorses legislation promoting the facilitation of community efforts to address the cleanup of trash, litter, and weeds which may include methods such as using compost and chipping, with a specific emphasis on elevating the quality of the City's roadways, rights of way, medians, arroyos, open spaces, trails, and parks.

BE IT FURTHER RESOLVED that the Governing Body supports the creation of and funding for a state-wide litter prevention and reduction program through messaging, marketing, advertising, and communications, such as public service announcements or new campaigns that will encourage all New Mexicans, as well as Santa Feans, to stop putting trash, littler, or other throw-away items into the streets, roadways, highways, freeways, parks, and other public spaces across the state.

BE IT FURTHER RESOLVED that the Governing Body supports and endorses legislation or appropriations to improve the environment, enhance the quality of the City's public spaces, and achieve its sustainability goals, including but not limited to funding for projects and programs that support water conservation, erosion control, tree planting, biodiversity, outdoor recreation, and public art.

BE IT FURTHER RESOLVED that that Governing Body re-affirms its support for and endorsement of any legislation that establishes an "extended producer responsibility" program that requires manufacturers and retailers to be responsible for the costs associated with a product throughout

its life cycle, from creation to disposal, and/or re-use.

BE IT FURTHER RESOLVED that the Governing Body re-affirms its support for and endorsement of any legislation that advances the environmental sustainability goals of the City, including renewable energy generation and storage, building electrification, public transportation and complete streets, carbon neutrality or net-zero greenhouse gas emissions, as well as continued support for implementation of the Community Solar Act and funding for watershed restoration and forest fire mitigation.

BE IT FURTHER RESOLVED that the Governing Body re-affirms its support for and endorsement of any legislation that would expand the Air Quality Control Act, NMSA 1978, § 74-2-2(J), to include an express option for local governments to opt-in to an emissions inspections program.

BE IT FURTHER RESOLVED that the Governing Body supports and endorses any legislation that funds the New Mexico Climate Investment Center to combat climate change that would increase green infrastructure development, energy conservation and sustainability measures, and access to funding for green energy investments for assisting lower-income individuals and families, rural communities, and pueblos.

BE IT FURTHER RESOLVED that the Governing body supports continued analysis and study of how to improve emergency response, preparation, and management strategies for addressing environmental and radiological emergencies, which could include climate change adaptation strategies and improvement to and development of emergency management infrastructure.

BE IT FURTHER RESOLVED that the Governing Body supports appropriations to New Mexico's Department of Cultural Affairs in support of the expansion of local library programming for local communities.

BE IT FURTHER RESOLVED that the Governing Body re-affirms its support for and endorsement of any legislation that would improve and expand early childhood education, with an emphasis on the following initiatives: infant and toddler care; capital improvements for center-based

and in-home care; stipend-based training opportunities for the family, friends, and neighbor network (FFN); and investment in pre-apprentice and apprenticeship programs to develop the early childcare educator pipeline.

BE IT FURTHER RESOLVED that the Governing Body endorses any legislation that supports childcare as a guaranteed, basic right for families.

BE IT FURTHER RESOLVED that the Governing Body supports legislation for early childcare apprenticeship and pre-apprenticeship programs, including expansion of the workforce to run such programs.

BE IT FURTHER RESOLVED that the City continues to support statewide paid sick leave legislation, as described in the City's Resolution No. 2021-11, unanimously passed by the members of the Governing Body in 2021.

BE IT FURTHER RESOLVED that the Governing Body urges the legislature to address the underfunding of the Public Employees Retirement Association pension plans.

BE IT FURTHER RESOLVED that the Governing Body re-affirms its support for and endorsement of any legislation that would increase funding for the New Mexico Tourism Department for use in advertising, a state-wide co-op grant program, and expansion of its advertising scope to include new markets with strong potential for travel to the state.

BE IT FURTHER RESOLVED that the Governing Body directs the City's lobbyist to oppose any legislation introduced during the Legislative Session deemed to be detrimental to the City.

BE IT FURTHER RESOLVED that the Governing Body renews its requests that the Legislature ensure that hold harmless payments to counties and municipalities are not eliminated or further reduced and returned to their original schedule; ensure that any tax reform continues to hold counties and municipalities harmless in lieu of the enactment of legislation reinstating the gross receipts tax on food and medical; and that protects local governments' annual revenues if the Legislature enacts legislation modifying State gross receipts tax deductions and exemptions.

BE IT FURTHER RESOLVED that the Governing Body supports and endorses legislation that expands the permitted uses of existing lodgers' tax or creates an additional lodgers' tax, to defray the cost of providing affordable housing, permanent supportive housing and addressing the needs of low-income people by providing wraparound services such as childcare and/or that leverages federal funding for affordable housing.

BE IT FURTHER RESOLVED that the Governing Body re-affirms its support for and endorsement of any legislation that would eliminate the three percent (3%) cap on annual property tax increases on residences that are not owner-occupied as the owner's principal place of residence.

BE IT FURTHER RESOLVED that the Governing Body re-affirms its support for and endorsement of legislation during the Legislative Session that would allow for a New Mexico Public Bank owned by and for the people of New Mexico that would direct the State's investment decisions to support and diversify the economy including achieving goals in education, eco-tourism, food security, solar energy installations, broadband expansion, health clinic upgrades, and clean energy infrastructure projects, by keeping New Mexico's money in New Mexico.

BE IT FURTHER RESOLVED that the Governing Body supports and endorses any legislation that increases the likelihood of local governments recruiting, retaining, promoting, and housing first responders and Alternative Response Unit case workers and behavioral health employees in the communities in which they serve to improve public safety and enhance emergency response capacity.

BE IT FURTHER RESOLVED that the Governing Body renews its requests that the Legislature appropriate money from the general fund to support the City's "Alternative Response Unit", which allows law enforcement officers to work with the Santa Fe Fire Department and with case managers under the supervision of a licensed Clinical Social Worker to redirect persons who are experiencing non-violent mental health episodes, public intoxication, and/or who may be suspected of involvement in non-violent, low-level crimes, to alternative, community-based services in lieu of

prosecution or jail.

BE IT FURTHER RESOLVED, if the New Mexico Supreme Court adopts the proposed case management order for the First Judicial district, then the State will allocate funding to the impacted criminal justice agencies, including law enforcement, to ensure sufficient funding to allow them to comply with the order.

BE IT FURTHER RESOLVED, that the Legislature should adopt interpretive language regarding the terms "dangerousness" and "safety" with respect to Article II, Section 13 of the New Mexico State Constitution, disallowing a narrow reading of those terms.

BE IT FURTHER RESOLVED that the Governing Body supports legislation that creates a major entertainment venue in Santa Fe for sports, concerts, and music festivals throughout the state, specifically as it relates to associated economic development.

BE IT FURTHER RESOLVED that the Governing Body re-affirms its support for and endorsement of any legislation that improves broadband infrastructure throughout the state, specifically as it relates to associated community and economic development.

BE IT FURTHER RESOLVED that the Governing Body renews its request that the Legislature adopt legislation that pertains to statewide business licensing to permit business owners to operate in all cities, counties, and municipalities, provided business owners comply with local land use and safety requirements.

BE IT FURTHER RESOLVED that the Governing Body supports any legislation that improves small business diversity throughout the state, specifically as it relates to increased tourism and associated economic development.

BE IT FURTHER RESOLVED that the Governing Body supports any legislation that supports mixed-use manufacturing with associated workforce housing, community convenience amenities, walkability, and sustainability, such as the El Lucero Development, specifically as small business manufacturing relates to associated community and economic development.

BE IT FURTHER RESOLVED that the Governing Body supports legislation that increases economic mobility efforts, specifically as these efforts relate to community and economic development.

BE IT FURTHER RESOLVED that the Governing Body supports legislation that promotes equity and entrepreneurship for the City's Hispanic Spanish-language speaking and immigrant entrepreneur communities and provides increased diversity in the City's efforts for resilient economic development.

BE IT FURTHER RESOLVED that the Governing Body directs the City's lobbyist to work with the New Mexico Municipal League in support of any Municipal League 2025 Legislative Priority from which the City would benefit from the passage of such initiative.

BE IT FURTHER RESOLVED that the Governing Body directs the City's lobbyist to make any capital outlay project directly or indirectly included in the City ICIP Priority List a priority.

BE IT FURTHER RESOLVED that the Governing Body directs the City's lobbyist to work to advance any legislation introduced during the Legislative Session deemed to be beneficial to the City.

BE IT FURTHER RESOLVED that while this Resolution represents a majority of the intent of the Governing Body as to 2025 legislative priorities, other timely priorities may be approved by the Governing Body, incorporated into the City's legislative agenda, and forwarded to the City's lobbying team for action.

BE IT FURTHER RESOLVED that the City Clerk be directed to forward a copy of this Resolution to the City's lobbyist, the City's legislative delegation, and the Governor of New Mexico.

PASSED, APPROVED, and ADOPTED this ____ day of____, 2024.

_____

ALAN WEBBER, MAYOR

ATTEST:

_____

GERALYN F. CARDENAS, INTERIM CITY CLERK

APPROVED AS TO FORM:



_____

ERIN K. McSHERRY, CITY ATTORNEY

Legislation/2024/Resolutions)/Legislative Priorities 2025

FIR No. 10626.1

FISCAL IMPACT REPORT

General Information:

(Check) **Bill:** _____ **Resolution:** X

Short Title(s): 2025 Legislative Priorities

Sponsor(s): Mayor Alan Webber

Reviewing Department(s): Public Works Department and City Attorney's Office

Staff Completing FIR: Marci Eannarino, Legislation and Policy Innovation Manager and

Christine Spiers, Legislative Assistant **Date:** 10/23/2024 **Phone:** (505) 955-6518; (505) 955-6692

Reviewed by City Attorney: _____ **Date:** Nov 7, 2024

Reviewed by Finance Director: Emily K. Oster **Date:** Nov 7, 2024

Summary:
The proposed resolution establishes the City of Santa Fe's ("City's") legislative priorities for the 2025 Legislative Session. The resolution includes citywide capital outlay requests, district capital outlay requests, and policy priorities.

Departments Affected:
All departments.

Consequences of Not Enacting Legislation:
If this legislation is not adopted, the City will have limited capital outlay and policy priorities identified prior to the 2025 New Mexico Legislative Session.

Conflict, Duplication, Companionship, or Relationship to Other Legislation:
None identified.

Performance and Administrative Implications:
The resolution would direct the City Clerk to send the adopted resolution to the City's lobbyist, the City's legislative delegation, and the Governor of New Mexico.

Fiscal Implications:
None identified.

Fiscal Impact
X Check here if no fiscal impact

Expenditures

Expenditure Type	FYE 2025	FYE 2026	FYE 2027	Require BAR (Y/N)	Recurring (R) or Non-recurring (NR)	Fund	3-Year Total Cost
Personnel and Benefits*	$	$	$				
Capital Outlay	$	$	$				
Contractual/ Professional Services	$	$	$				
Operating	$	$	$				$
Total:	$	$	$				$

Expenditure Narrative:

Revenue

Revenue Type	FYE 2025	FYE 2026	FYE 2027	Recurring (R) or Non-recurring (NR)	Fund
General Fund	$	$	$		
Special Revenue	$	$	$		
CIP	$	$	$		
Enterprise	$	$	$		
Internal Service	$	$	$		
Trust and Agency	$	$	$		
Federal	$	$	$		
Other	$	$	$		
Total	$	$	$		

Revenue Narrative:

Signature:

Email: rawheeler@santafenm.gov

Signature:

Email: cmspiers@santafenm.gov

Signature:

Email: maeannarino@santafenm.gov

CITY OF SANTA FE, NEW MEXICO
PROPOSED AMENDMENT(S) TO RESOLUTION NO. 2024-__
2025 Legislative Priorities

Mayor and Members of the City Council:

In relation to Resolution No. 2024-__:

ESTABLISHING THE CITY OF SANTA FE'S PRIORITIES FOR CONSIDERATION BY THE NEW MEXICO STATE LEGISLATURE DURING THE 57TH LEGISLATURE – STATE OF NEW MEXICO – FIRST SESSION, 2025.

I intend to propose the following amendment(s)

1. On page 2, line 25, ***delete*** "any".
2. On page 3, line 7, ***delete*** "any".
3. On page 3, line 24, ***delete*** "any".
4. On page 5, line 2, ***delete*** "any".
5. On page 5, line 8, ***delete*** "any".
6. On page 5, line 9, ***delete*** "any".
7. On page 5, line 16, ***delete*** "any".
8. On page 5, line 21, ***delete*** "any".
9. On page 6, line 8, ***delete*** "any".
10. On page 6, line 11, ***delete*** "any".
11. On page 6, line 17, ***delete*** "any".
12. On page 7, line 7, ***delete*** "any".
13. On page 7, line 24, ***delete*** "any".
14. On page 8, line 3, ***delete*** "any".
15. On page 8, line 9, ***delete*** "any".
16. On page 8, line 11, ***delete*** "any".
17. On page 8, line 24, ***delete*** "any".
18. On page 9, line 4, ***delete*** "any".
19. On page 9, line 15, ***delete*** "any".
20. On page 9, line 19, ***delete*** "any".
21. On page 10, line 7, ***delete*** "any".
22. On page 10, line 15, ***delete*** "any".
23. On page 11, lines 6 through 8, ***delete*** "BE IT FURTHER RESOLVED, that the Legislature should adopt interpretive language regarding the terms "dangerousness" and "safety" with respect to Article II, Section 13 of the New Mexico State Constitution, disallowing a narrow reading of those terms.
24. On page 11, line 13, ***delete*** "any".
25. On page 11, line 19 ***delete*** "any".
26. On page 11, line 22, ***delete*** "any".
27. On page 12, line 8, ***delete*** "any"
28. On page 12, line 10 through 11, after the words "lobbyist to" ***delete*** "make any".
29. On page 12, line 11, before the words "capital outlay" ***insert*** "prioritize".
30. On page 12, line 11, ***insert*** the letter "s" at the end of the word "project".

31. On page 12, line 11, after the word "project" ***delete*** the words "directly or indirectly".
32. On page 12, line 11, after the words "Priority List" ***delete*** "a priority".

This amendment WILL change the caption. _____

This amendment WILL NOT change the caption. __x__

Respectfully submitted,



Carol Romero-Wirth, Councilor

Approved as to Form:

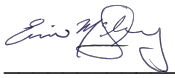

Erin K. McSherry, City Attorney

ADOPTED: _____
NOT ADOPTED: _____
DATE: _____

_____
ANDRÉA SALAZAR, City Clerk

CITY OF SANTA FE

Date: October 22, 2024

To: Governing Body
Finance
Quality of Life

Via: Henri Hammond-Paul, Community Health and Safety Department Director

HENRI HAMMOND-PAUL (Nov 8, 2024 10:12 MST)

From: **Julie Sanchez, Youth and Family Services Division Director**

Subject: **The Life Link Amendment**

Vendor Name: **The Life Link**

Vendor Number: **1340**

ITEM AND ISSUE:
Request for Approval of Contract Amendment No. 1 with the Life Link Item# 23-0700 of Recovery Funds Subrecipient Contract Increasing the Total Amount to $1,600,000 for Professional Services and extend the term to June 30th, 2026. (Youth and Family Services Division Director; Julie Sanchez, jjsanchez@santafenm.gov)

Action Requested: **Approve Contract Amendment for The Life Link**

BACKGROUND AND SUMMARY:
The Life Link has been the Service Provider at the Safe Outdoor Space at Christ Lutheran Church since it opened. The Contract is being amended in order to continue their excellent service in support of providing services to formerly unsheltered individuals.

PROCUREMENT METHOD:
RFA# 24-13-A

Chief Procurement Officer Approval:_____ **Date:** Nov 8, 2024
Comment/Exceptions:_____

Supporting Information:

CONTRACT NUMBER:
The FY25 Munis contract number is 3204464
The FY25 Project ledger number is COM222400C

$$$$$ SOURCE/REVENUE: ☒**Expense** ☐**Revenue**
The funding source is:

Fund Name/Number: Health and Human Services/Fund 240
Munis Org Name/Number: Community Services/2400122
Munis Object Name/Number: Grants and Services/ 510400

If the project is grant funded? List grant award number*:* *SLFRP5552*

Grant Manager / Accounting Officer Approval: Matthew Bonifer Matthew Bonifer (Nov 8, 2024 17:41 MST) **Date:** Nov 8, 2024
Comment/Exceptions: _____

Project Ledger #:_____

Budget Officer Approval: ALEXIS LOTERO (Nov 8, 2024 17:13 MST) **Date:** Nov 8, 2024
Comment/Exceptions: _____

CAPITAL ASSET (will this procurement result in a tangible item that costs more than $5,000?):

☐Yes | ☐ No

 # (if known): _____

Repair or Replacement of Existing Equipment:

☐Yes | ☒ No
If yes -> ☐Repair | ☐ Replacement

Please explain: NA

Capital Project:
(New and improvement projects that are going to cost $10,000 or more)
☐ Yes | ☒ No

Project Ledger #:_____

Anticipated length of project: _____

Asset Manager Approval:_____ **Date:**_____
Comment/Exceptions: _____

Department Approvals:
IT Components: ☐ **Yes | ☒ No**
Vehicles: ☐ **Yes | ☒ No**
Facilities, Furniture, Fixtures, Equipment: ☐ **Yes | ☒ No**

Approval:_____ **Title:**_____ **Date**:_____
Approval:_____ **Title:**_____ **Date**:_____
Comment & Exceptions:

Department Contract Administrator Contact Info:

ATTACHMENTS:

Santa Fe Business License
Certificate of Liability Insurance
Original Contract

\ Item# 23-0700
Munis Contract# 3204464
RFA# 24/13/A

CITY OF SANTA FE
AMENDMENT No. 1 TO
RECOVERY FUNDS SUBRECIPIENT
CONTRACT BETWEEN CITY OF SANTA FE AND THE LIFE LINK
FOR SERVICES
ITEM# 23-0700

This AMENDMENT No. 1 (the "Amendment") amends the CITY OF SANTA FE RECOVERY FUNDS SUBRECIPIENT CONTRACT, dated December 21, 2023 (the "Contract"), between the City of Santa Fe (the "City") and **The Life Link**. (the "Contractor"). The date of this Amendment shall be the date when it is executed by the City and the Contractor whichever occurs last.

RECITALS:

A. Under the terms of the Contract, Contractor has agreed to provide outreach, housing navigation, case management, life skills training, assessments and other operational services to homeless individuals residing at the Safe Outdoor Space (SOS).

B. Pursuant to Article 7 of the Contract, and for good and valuable consideration, the receipt and sufficiency of which are acknowledged by the parties, the City and the Contractor agree as follows:

1. COMPENSATION.

Article 3 of the Contract is amended to increase the amount of compensation by a total of one million one hundred fifty-nine thousand eight hundred and eight dollars ($1,159,808) as to reach a total compensation as indicated in Exhibit A (SOS Adjusted Budget Proposal), so that the first paragraph of Article 3, under Compensation reads in its entirety as follows:

A. The City shall pay the Contractor in full payment for services satisfactorily performed based upon the deliverables outlined in the Scope of Work. The total compensation under this Contract shall not exceed one million six hundred thousand dollars ($1,600,000.00), including New Mexico gross receipts tax. This amount is a maximum and not a guarantee that the work assigned to be performed by Contractor under this Contract shall equal the amount stated herein. The Parties do not intend for the Contractor to continue to provide Services without compensation when the total compensation amount is reached. Contractor is responsible for notifying the City when the Services provided under this Contract reach the total compensation amount. In no event will the Contractor be paid for Services provided in excess of the total compensation amount without this Contract being amended in writing prior to services, in excess of the total compensation amount being provided.

2. TERM.

Article 4of the Contract is hereby deleted in its entirety and following language is substituted so that Article 4, "Term" reads in its entirety as follows:

THIS CONTRACT SHALL NOT BECOME EFFECTIVE UNTIL APPROVED IN WRITING BY THE CITY. This Contract shall begin on date approved by the City and end on June 30th, 2026. In no event will the term exceed the duration allowed by statute, NMSA 1978 13-1-150.3.

3. CONTRACT IN FULL FORCE.

Except as specifically provided in this Amendment, the Contract remains and shall remain in full force and effect, in accordance with its terms.

IN WITNESS WHEREOF, the parties have executed this Amendment No. 1 to the Contract as of the dates set forth below.

CITY OF SANTA FE:

_____
ALAN WEBBER, MAYOR

DATE:_____

ATTEST:

_____
CITY CLERK

CITY ATTORNEY'S OFFICE:

_____
ASSISTANT CITY ATTORNEY

APPROVED FOR FINANCES:

Emily K. Oster
_____
EMILY OSTER, FINANCE DIRECTOR

CONTRACTOR:
THE LIFE LINK

_____
MICHAEL DeBERNARDI, CEO

DATE: Nov 8, 2024
CRS# 02-097780-00-8
Registration #29352

EXHIBIT A

SOS Adjusted Budget Proposal

EXPENSES			
Expense Categories	**Details**	**Totals**	
Contractual Services	Mileage	19,600.00	
	Program Evaluator	27,025.00	
	Work Stipends for Residents	30,000.00	
	Flex funds for client needs	80,854.00	
	Training Services	1,388.00	
	Internet Services	2,000.00	
	Laundry Services	10,000.00	
	Recruiting Services	1,000.00	
	Food preparation staff $14.60 x 15 hrs wk x 52 wks	11,388.00	
	Meals (2 meals per day 5 days a week)	23,000.00	
	Travel	4,078.00	
	Contractual Subtotal	210,333.00	
Personnel	Program Director + Benefits	39,999.00	
	Outreach Program Director + Benefits	79,860.00	
	Program Manager + Benefits	151,008.00	
	Outreach Specialist(s) + Benefits	314,600.00	
	Site Coordinator (s) + Benefits	176,160.00	
	Case Manager (s) + Benefits	179,560.00	
	Clubhouse Manager + Benefits	10,000.00	
	Security for after hours 40 hrs per wk @ $24 x 52 wk	208,480.00	
	Overtime for staff	180,000.00	
	Personnel Subtotal	1,339,667.00	
Equipment Supplies	Supplies table/chairs/ phone chargers / food storage etc.	20,000.00	
	Maintenance + Repair	10,000.00	
	Transportation Services	20,000.00	
	Equipment/Supplies	50,000.00	
	BUDGET TOTAL	**1,600,000.00**	

REVISED DRAFT Life Link_S0S_Amendment No. 1-final CAO

Final Audit Report 2024-11-08

Created:	2024-11-07
By:	Amy Cawthon (amcawthon@santafenm.gov)
Status:	Signed
Transaction ID:	CBJCHBCAABAAIMMMJRPfEIDxlx3Hmg9n4pFGmdhZbO-_

"REVISED DRAFT Life Link_S0S_Amendment No. 1-final CAO" History

Document created by Amy Cawthon (amcawthon@santafenm.gov)
2024-11-07 - 4:40:33 PM GMT- IP address: 63.232.20.2

Document emailed to Michael DeBernardi (drdebernardi@thelifelink.org) for signature
2024-11-07 - 4:41:14 PM GMT

Email viewed by Michael DeBernardi (drdebernardi@thelifelink.org)
2024-11-07 - 4:45:04 PM GMT- IP address: 96.19.182.76

Document e-signed by Michael DeBernardi (drdebernardi@thelifelink.org)
Signature Date: 2024-11-08 - 4:30:31 PM GMT - Time Source: server- IP address: 65.133.22.242

Document emailed to Rebecca Mnuk-Herrmann (ramnukherrmann@santafenm.gov) for signature
2024-11-08 - 4:30:35 PM GMT

Email viewed by Rebecca Mnuk-Herrmann (ramnukherrmann@santafenm.gov)
2024-11-08 - 4:34:27 PM GMT- IP address: 174.218.18.59

Document e-signed by Rebecca Mnuk-Herrmann (ramnukherrmann@santafenm.gov)
Signature Date: 2024-11-08 - 4:35:05 PM GMT - Time Source: server- IP address: 174.218.18.59

Agreement completed.
2024-11-08 - 4:35:05 PM GMT

Powered by Adobe Acrobat Sign

City of Santa Fe

Treasury Department
200 Lincoln Ave.
Santa Fe, New Mexico 87504-0909
505-955-6551

BUSINESS REGISTRATION

Business Name: THE LIFE LINK
DBA: THE LIFE LINK - 505 GET FREE

Business Location: 1807 SECOND ST 46A
SANTA FE , NM 87505

Owner: THE LIFE LINK

License Number: 227753

Issued Date: December 04, 2023

Expiration Date: December 04, 2024

License Type: Business License - Renewable

Classification: Business Registration - Standard

Fees Paid: $35.00

THE LIFE LINK
2325 CERRILLOS RD
SANTA FE , NM 87505

THIS IS NOT A CONSTRUCTION PERMIT OR SIGN PERMIT. APPROPRIATE PERMITS MUST BE OBTAINED FROM THE CITY OF SANTA FE BUILDING PERMIT DIVISION PRIOR TO COMMENCEMENT OF ANY CONSTRUCTION OR THE INSTALLATION OF ANY EXTERIOR SIGN.

THIS REGISTRATION/LICENSE IS NOT TRANSFERRABLE TO OTHER BUSINESSES OR PREMISES.

TO BE POSTED IN A CONSPICUOUS PLACE

CERTIFICATE OF LIABILITY INSURANCE

DATE (MM/DD/YYYY): 11/06/2023

THIS CERTIFICATE IS ISSUED AS A MATTER OF INFORMATION ONLY AND CONFERS NO RIGHTS UPON THE CERTIFICATE HOLDER. THIS CERTIFICATE DOES NOT AFFIRMATIVELY OR NEGATIVELY AMEND, EXTEND OR ALTER THE COVERAGE AFFORDED BY THE POLICIES BELOW. THIS CERTIFICATE OF INSURANCE DOES NOT CONSTITUTE A CONTRACT BETWEEN THE ISSUING INSURER(S), AUTHORIZED REPRESENTATIVE OR PRODUCER, AND THE CERTIFICATE HOLDER.

IMPORTANT: If the certificate holder is an ADDITIONAL INSURED, the policy(ies) must have ADDITIONAL INSURED provisions or be endorsed. If SUBROGATION IS WAIVED, subject to the terms and conditions of the policy, certain policies may require an endorsement. A statement on this certificate does not confer rights to the certificate holder in lieu of such endorsement(s).

PRODUCER Daniels Insurance, Inc.-Santa Fe 805 St Michaels Drive Santa Fe NM 87505	**CONTACT NAME:** Ed Risley **PHONE (A/C, No, Ext):** (505) 982-4302 **FAX (A/C, No):** (505) 989-9186 **E-MAIL ADDRESS:** erisley@danielsinsuranceinc.com
INSURED The Life Link P.O. Box 6094 Santa Fe NM 875026094	**INSURER(S) AFFORDING COVERAGE** — **NAIC #** INSURER A: New Mexico Premier Insurance Com — 13675 INSURER B: ACE Property and Casualty Insura — 20699 INSURER C: Ace American Insurance Company — 22667 INSURER D: Travelers Casualty and Surety — 19038 INSURER E: INSURER F:

COVERAGES MN **CERTIFICATE NUMBER:** Cert ID 36899 (20) **REVISION NUMBER:**

THIS IS TO CERTIFY THAT THE POLICIES OF INSURANCE LISTED BELOW HAVE BEEN ISSUED TO THE INSURED NAMED ABOVE FOR THE POLICY PERIOD INDICATED. NOTWITHSTANDING ANY REQUIREMENT, TERM OR CONDITION OF ANY CONTRACT OR OTHER DOCUMENT WITH RESPECT TO WHICH THIS CERTIFICATE MAY BE ISSUED OR MAY PERTAIN, THE INSURANCE AFFORDED BY THE POLICIES DESCRIBED HEREIN IS SUBJECT TO ALL THE TERMS, EXCLUSIONS AND CONDITIONS OF SUCH POLICIES. LIMITS SHOWN MAY HAVE BEEN REDUCED BY PAID CLAIMS.

INSR LTR	TYPE OF INSURANCE	ADDL INSD	SUBR WVD	POLICY NUMBER	POLICY EFF (MM/DD/YYYY)	POLICY EXP (MM/DD/YYYY)	LIMITS	
C	[X] COMMERCIAL GENERAL LIABILITY [ ] CLAIMS-MADE [X] OCCUR GEN'L AGGREGATE LIMIT APPLIES PER: [ ] POLICY [ ] PRO-JECT [X] LOC [ ] OTHER:			SVRD37800545002	11/30/2023	11/30/2024	EACH OCCURRENCE DAMAGE TO RENTED PREMISES (Ea occurrence) MED EXP (Any one person) PERSONAL & ADV INJURY GENERAL AGGREGATE PRODUCTS - COMP/OP AGG Empl Benefits Liab	$ 1,000,000 $ 1,000,000 $ 20,000 $ 1,000,000 $ 3,000,000 $ 3,000,000 $ 1,000,000
B	AUTOMOBILE LIABILITY [X] ANY AUTO [ ] OWNED AUTOS ONLY [ ] SCHEDULED AUTOS [ ] HIRED AUTOS ONLY [ ] NON-OWNED AUTOS ONLY			CALH0861555A002	11/30/2023	11/30/2024	COMBINED SINGLE LIMIT (Ea accident) BODILY INJURY (Per person) BODILY INJURY (Per accident) PROPERTY DAMAGE (Per accident)	$ 1,000,000 $ $ $
	[ ] UMBRELLA LIAB [ ] OCCUR [ ] EXCESS LIAB [ ] CLAIMS-MADE [ ] DED [ ] RETENTION $						EACH OCCURRENCE AGGREGATE	$ $
A	WORKERS COMPENSATION AND EMPLOYERS' LIABILITY ANYPROPRIETOR/PARTNER/EXECUTIVE OFFICER/MEMBER EXCLUDED? Y / N [ ] (Mandatory in NH) If yes, describe under DESCRIPTION OF OPERATIONS below	N / A		6145.134	11/27/2023	11/27/2024	[X] PER STATUTE [ ] OTH-ER E.L. EACH ACCIDENT E.L. DISEASE - EA EMPLOYEE E.L. DISEASE - POLICY LIMIT	$ 1,000,000 $ 1,000,000 $ 1,000,000
C	Professional Services			OGLG25507411002	11/30/2023	11/30/2024	Limit	$ 1,000,000
D	Crime			105649125	11/01/2023	11/30/2024	Employee Theft	$ 400,000

DESCRIPTION OF OPERATIONS / LOCATIONS / VEHICLES (ACORD 101, Additional Remarks Schedule, may be attached if more space is required)

General liability policies contain a Blanket Additional Insured provision that establishes the scope of Additional Insured coverage granted to the Certificate Holder.

CERTIFICATE HOLDER

City of Santa Fe

P.O. Box 909

Santa Fe NM 87504

CANCELLATION

SHOULD ANY OF THE ABOVE DESCRIBED POLICIES BE CANCELLED BEFORE THE EXPIRATION DATE THEREOF, NOTICE WILL BE DELIVERED IN ACCORDANCE WITH THE POLICY PROVISIONS.

AUTHORIZED REPRESENTATIVE

© 1988-2015 ACORD CORPORATION. All rights reserved.

MEMORANDUM

TO: Governing Body
VIA: John Blair, City Manager
FROM: Mary McCoy, Finance Department Director
Rich Brown, Community Development Department Director
Kyra Ochoa, Community Health and Safety Department Director KO (Apr 22, 2022 13:27 MDT)
Regina Wheeler, Public Works Department Director RW (Apr 22, 2022 13:14 MDT)
RE: City of Santa Fe's American Rescue Plan Act (ARPA) Grant Allocation
DATE: April 22, 2022

Item and Issue:
Request for Approval of an FY22 Budget Adjustment Resolution (BAR) in amount of $15,049,631 for the American Rescue Plan Act (ARPA) grant.

Description:
The federal American Rescue Plan Act (ARPA) established the Coronavirus State Fiscal Recovery Fund and Coronavirus Local Fiscal Recovery Fund, which together make up the Coronavirus State and Local Fiscal Recovery Funds ("SLFRF") program. This program is intended to provide support to State, territorial, local, and Tribal governments in responding to the economic and public health impacts of COVID-19 and in their efforts to contain impacts on their communities, residents, and businesses.

The City of Santa Fe's plan to deploy the $15,049,631 in ARPA grant funding allocated by the U.S. Department of Treasury is to guide resources to families, job seekers, non-profits and businesses in Santa Fe in order to build a strong, resilient, and equitable recovery. For Santa Fe, the funding provided with the federal ARPA will be transformational in addressing the social and economic challenges exacerbated during the pandemic. The ARPA projects described below are consistent with the ARPA requirements and the funds must be spent by the end of calendar year 2024.

The City of Santa Fe will be one of hundreds of American municipalities receiving funds from the ARPA. To expend these funds in an equitable, just, and community-driven fashion, the City of Santa Fe commissioned a community engagement data collection effort to better understand the needs of Santa Fe residents. Respondents were asked to indicate the categories of City services that they felt should receive the most attention as the City determined the allocation of ARPA funding over the course of the next three years. Community Health and Safety, Children and Youth Support Services, and Economic Health were the three areas that respondents felt needed the most funding allocation.

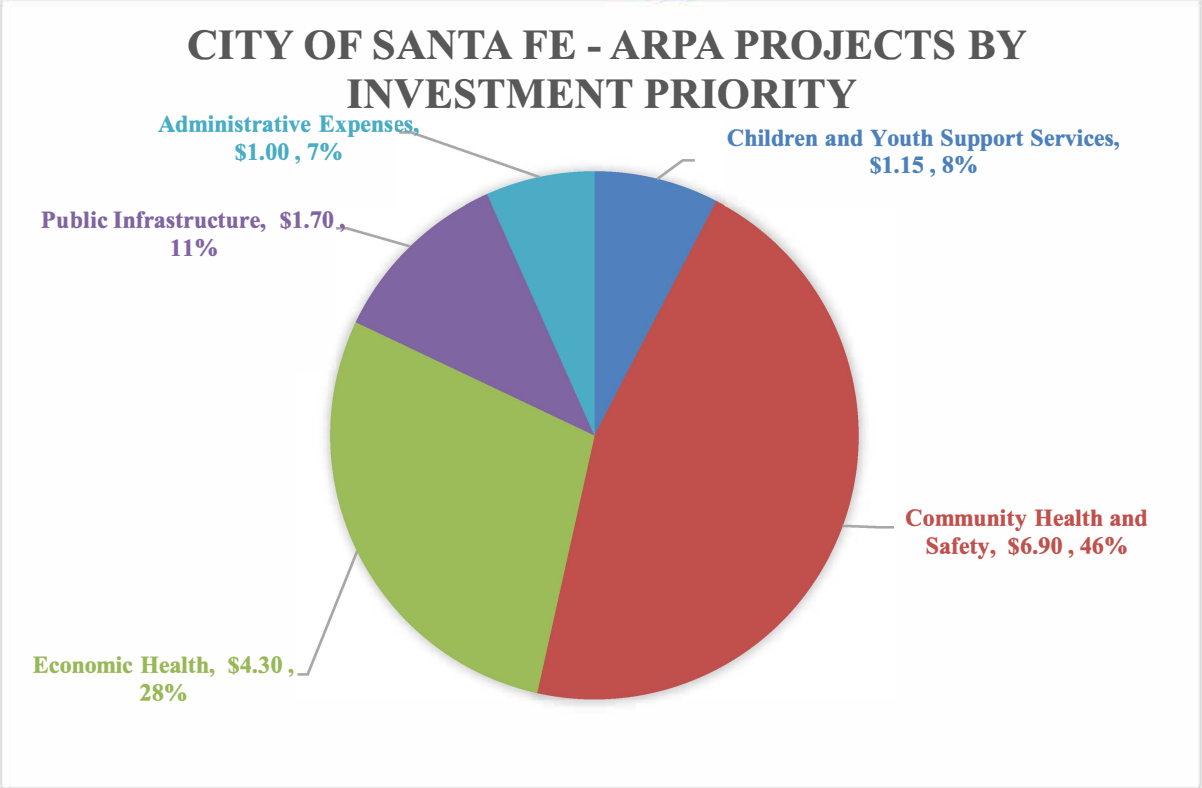

The City's plan allocates almost half of the City's ARPA funds, or $6.9 million, or 45.9% to address the community health and safety including expanding guaranteed income programs, support for community mental health, piloting a community cash assistance program, providing solutions for unsheltered homelessness, continuing operations of the Midtown Emergency Homeless Shelter, providing additional support for affordable housing, assistance for vulnerable populations in Santa Fe; COVID-19 safe retrofits for City facilities, and continued purchases of personal protective equipment to mitigate the spread of COVID-19.

The City's plan allocates $4.3 million, or 28.6%, to Economic Health including support for small businesses, job training programs, and direct support to non-profits. The City's plan allocates $1.15, or 7.6%, to Children and Youth Support services including expanding childcare capacity and the creation of a college and career youth work corps. The City will allocate $1.7 million, or 11.3%, to fund public infrastructure investments including, public Wi-Fi and parks and trails improvements.

The City will use 6.6%, or just under $1 million, to fund administrative expenses in managing the $15 million grant. The City Attorney's Office has reviewed these expenditures and determined that they are legally permissible for projects that apply the federal rule's limitations and reporting requirements. Below is summary of the proposed projects broken out by investment priority. Descriptions on each of the projects follows.

No.	Investment Priority	Project Title	ARPA Amount
1	Children and Youth Support Services	Early Childcare Job Development/ Navigation and Community Resiliency Pilot	$ 900,000
2	Children and Youth Support Services	College & Career Youth Workforce Corps	$ 250,000
3	Community Health and Safety	Guaranteed Income Expansion/Community Cash Assistance Pilot	$ 1,500,000
4	Community Health and Safety	Solutions for Unsheltered Homelessness	$ 1,000,000
5	Community Health and Safety	Midtown Emergency Shelter Services	$ 600,000
6	Community Health and Safety	Affordable Housing Support- Lamplighter Inn Conversion	$ 2,000,000
7	Community Health and Safety	Assistance for Vulnerable Populations	$ 150,000
8	Community Health and Safety	Behavioral Health and Community Violence Intervention Services	$ 1,000,000
9	Community Health and Safety	COVID-Safe Retrofits for City Facilities	$ 500,000
10	Community Health and Safety	PPE and Supplies for COVID Mitigation	$ 150,000
11	Economic Health	Small Business Support	$ 2,500,000
12	Economic Health	Job Training	$ 1,200,000
13	Economic Health	Non-profit Operational Support	$ 600,000
14	Public Infrastructure	Public Wi-Fi Project - Phase 2	$ 400,000
15	Public Infrastructure	Parks and Trails Improvements	$ 1,300,000
16	Administrative Expenses	Administrative Expense	$ 999,631
		Total	$ 15,049,631

Schedule:
Finance Committee: 4/26/2022
Governing Body: 4/27/2022

Funding Source:

The source of funding is the $15,049,631 from the American Rescue Plan grant.
Fund Name/Number: Multiple, see BAR attached
Munis Org Name/Number: Multiple, see BAR attached
Munis Object Name/Number: Multiple, see BAR attached

Action Requested:
Approval is requested of the FY22 budget adjustment for the ARPA grant.

CITY OF SANTA FE – AMERICAN RESCUE PLAN ACT FUNDING

Project Title: Early Childcare Job Development/Navigation and Community Resiliency Pilot

U.S. Department of Treasury Expenditure Category: 2.10 Assistance to Unemployed or Underemployed Workers

Funding Amount: $900,000

Department: Community Services Department **Department Contact:** Julie Sanchez

Proposal Description:
The Early Childcare Job Development/Navigation and Community Resiliency Pilot will train and develop more childcare workers. The project commits $300,000 per year for three years to subsidize students who will attend the Community College to obtain their credentials to provide much needed childcare services. The approach is to build the pipeline of providers; as students obtain their credentials, they will also be doing a practicum to provide childcare. The proposal includes opportunities for both job training as well as providing childcare.

- Curriculum development – quick certification program
- Cohort navigation/support services
- Training/workshop development
- Internship coordination
- Mentorship/Apprenticeship payments

Proposal Start Date: 5/2022 **Proposal End Date:** 12/2024

Performance Metrics:
- % recruited
- # finishing the program
- % entering the workforce

What City of Santa Fe constituents will be affected by this initiative/project?
Future and current childcare providers

CITY OF SANTA FE – AMERICAN RESCUE PLAN ACT FUNDING

Project Title: Guaranteed Income Expansion/Community Cash Assistance Pilot

U.S. Department of Treasury Expenditure Category: 2.3 Household Assistance: Cash Transfers

Funding Amount: $1,500,000

Department: Community Services Department **Department Contact:** Julie Sanchez

Proposal Description:
The program will continue with a partial second year of funding for current Guaranteed Income students (additional resources will come from other funding). The program will also add a second cohort of a mix of one-time cash assistance payments and on-going (short term) cash assistance to eligible community members utilizing the CONNECT network of navigators.

Proposal Start Date: 5/2022 **Proposal End Date:** 12/2024

Performance Metrics:
Recipients will be asked to respond to the following:
a. What impacted and/or disproportionally Impacted population does this project primarily serve? Please select the population primarily served.
b. If this project primarily serves more than one impacted and/or disproportionately impacted population, please select up to two additional populations served.

Recipients will select from the following options:

- Low-income households and populations
- Households and populations residing in Qualified Census Tracts
- Households that qualify for certain federal programs
- Households receiving services provided by Tribal governments
- Households residing in the U.S. territories or receiving services from these governments

What City of Santa Fe constituents will be affected by this initiative/project?
Community members that continue to be financially impacted by the pandemic.

CITY OF SANTA FE – AMERICAN RESCUE PLAN ACT FUNDING

Project Title: Solutions for Unsheltered Homelessness

U.S. Department of Treasury Expenditure Category: 2.18 Housing Support: Other Housing Assistance

Funding Amount: $1,000,000

Department: Community Services Department **Department Contact:** Julie Sanchez

Proposal Description:

- Contract services for encampment clean up
- Contract services for nonprofit service providers to house unsheltered people and provide services at campsites
- Contract services for portable toilets

Proposal Start Date: 5/2022 **Proposal End Date:** 12/2024

Performance Metrics:

- # served
- # transitioned in permanent housing
- # arrests
- # constituent complaints

What City of Santa Fe constituents will be affected by this initiative/project?
Unsheltered individuals, neighborhoods, waterways, Police and Fire services

CITY OF SANTA FE – AMERICAN RESCUE PLAN ACT FUNDING

Project Title: Midtown Emergency Shelter Services

U.S. Department of Treasury Expenditure Category: 2.16 Long-term Housing Security: Services for Unhoused Persons

Funding Amount: $600,000

Department: Affordable Housing **Department Contact:** Alexandra Ladd

Proposal Description:
The Midtown Emergency Shelter operated by Consuelo's Place provides emergency shelter and services to people experiencing homelessness including unsheltered individuals that test positive for COVID-19. The shelter is staffed 24/7, providing meals, hygiene services, case management. The shelter has the capacity to serve 50+ individuals at any single time and is integrated with the City's Code Blue response.

Proposal Start Date: 5/2022 **Proposal End Date:** 12/2024

Performance Metrics:

- # individuals served
- # individuals placed in long-term housing
- # individuals served w/covid
- # homeless hospitalizations

What City of Santa Fe constituents will be affected by this initiative/project?
Unsheltered individuals

CITY OF SANTA FE – AMERICAN RESCUE PLAN ACT FUNDING

Project Title: Affordable Housing Support - Lamplighter Inn Conversion

U.S. Department of Treasury Expenditure Category: 2.16 Long-term Housing Security: Services for Unhoused Persons

Funding Amount: $2,000,000

Department: Affordable Housing **Department Contact:** Alexandra Ladd

Proposal Description:
Funds will be used to offset purchase costs and predevelopment costs for purchase/conversion of the Lamplighter Inn (2405 Cerrillos Rd) into permanent affordable rental housing, with 25% of units set aside for "special needs" renters. Public health outcomes are directly improved by housing vulnerable people and providing necessary health care and social services. Purchasing this property enables the long-term implementation of a supportive housing model that the City piloted through its operations at the Midtown Property (formerly Santa Fe University of Art and Design) and further supported at the Santa Fe Suites. This project ensures that people currently housed during the pandemic will have a longer-term housing option when the City's Midtown Shelter is phased out. High wait lists at the Midtown Emergency Homeless Shelter and Santa Fe Suites indicate continuing demand for deeply affordable rental housing, in addition to opportunities for workforce renters priced out of Santa Fe's market.

Proposal Start Date: 5/2022 **Proposal End Date:** 12/2024

Performance Metrics:

- # of ""special needs"" renters housed at property - # of tenant-based voucher holders housed at property
- duration of occupancy (longer terms means higher rate of stabilization for ""special needs"" renters)
- # of workforce renters able to ""move up"" to market rate rental or homeownership after stabilizing financial situation because living at project eases housing cost burden

What City of Santa Fe constituents will be affected by this initiative/project?
This project will make available affordable workforce rental units as well as deeply affordable supportive units for special needs renters.

CITY OF SANTA FE – AMERICAN RESCUE PLAN ACT FUNDING

Project Title: Public WiFi Project - Phase 2

U.S. Department of Treasury Expenditure Category: 2.4 Household Assistance: Internet Access Programs

Funding Amount: $400,000

Department: Economic Development Department

Department Contact: Rich Brown

Proposal Description:
Build and manage public WiFi infrastructure in economically distressed, high-density southside and midtown communities who will need support to cross the digital divide. This project is a key element for bridging the digital divide for many students, adults and families who are still struggling through the ongoing negative economic impacts of the COVID-19 pandemic.

Proposal Start Date: 5/2022 **Proposal End Date:** 6/2024

Performance Metrics:

- Installation and launch in eight, southside mobile home parks by end of year 2023
- Installation and launch in three midtown high-density housing locations by end of year 2024

What City of Santa Fe constituents will be affected by this initiative/project?
Residents of our high poverty/un and under-employed and high-density communities.

CITY OF SANTA FE – AMERICAN RESCUE PLAN ACT FUNDING

Project Title: Assistance for Vulnerable Populations

U.S. Department of Treasury Expenditure Category: 2.18 Housing Support: Other Housing Assistance

Funding Amount: $150,000

Department: Emergency Management and Safety Department **Department Contact:** Brian Williams

Proposal Description:
The Emergency Management and Safety Department will provide other departments with equipment and supplies needed to reduce the risk to vulnerable populations. This would include sleeping bags, tents and other essential supplies needed to reduce the risk of exposure and other hazards to vulnerable populations within the City.

Proposal Start Date: 5/2022 **Proposal End Date:** 12/2024

Performance Metrics:

- # of persons served

What City of Santa Fe constituents will be affected by this initiative/project?
Vulnerable populations in Santa Fe.

CITY OF SANTA FE – AMERICAN RESCUE PLAN ACT FUNDING

Project Title: Small Business Support

U.S. Department of Treasury Expenditure Category: 2.30 Technical Assistance, Counseling, or Business Planning

Funding Amount: $2,500,000

Department: Economic Development Department **Department Contact:** Rich Brown

Proposal Description:
Working with Santa Fe County, local foundations, local business advisory organizations and the North Central New Mexico COG, a variety of business recovery programs are being considered, including:

- An Economic Security & Opportunities grant program that supports nonprofits that provide career counseling and other services to attain employment; re-engage disconnected youth in paths for jobs; provide job training to low-wage earners to advance their skills; provide finance literacy training and foster the ability to save for and invest in future economic success; and/or provide opportunities to explore career paths, attain internships or apprenticeships, and enter a career with the skills to succeed.
- A Small Business Technical Advisory program that will engage navigators and our ecosystem partners to set up access and resources for small businesses affected by the COVID-19 economic recession. This would include a full roster of webinars, personal consultation and data collection targeted to small businesses that are still finding the right path to sustainable growth.
- A unique program concept that helps bridge the capital gap faced by many business owners by providing no-to-low interest rate small business loans in addition to training and consulting services; including access to loan programs that are targeted to Women, Black, Indigenous, People of Color (BIPOC), Immigrants, Refugees, and low-wealth New Mexicans.
- An investment in a technical support and information fund that also provides a small infusion of capital ($500- $3,000) to help businesses affected by the COVID pandemic diversify, sustain, or grow revenue, leverage other investments, and put systems in place that lead to growth and more job opportunities.
- Collaborate with the COG to support a simple and straightforward 'Working Now Loans' of up to $25,000 that would be available to help small businesses affected by the pandemic with expenses like payroll, rent, marketing, inventory, ecommerce development, personal protective equipment, and small capital improvements.

Proposal Start Date: 5/2022 **Proposal End Date:** 12/2024

Performance Metrics:

- # of small businesses enrolled

- # of small businesses that report growth
- # of small businesses that increase employment
- # of business support programs that proposed
- % of businesses from economically-distressed census tracts
- Number of workers enrolled in sectoral job training programs
- Number of workers completing sectoral job training programs
- Number of people participating in summer youth employment programs

What City of Santa Fe constituents will be affected by this initiative/project?
Small Businesses, non-profit business advisory services

CITY OF SANTA FE – AMERICAN RESCUE PLAN ACT FUNDING

Project Title: Job Training

U.S. Department of Treasury Expenditure Category: 2.10 Assistance to Unemployed or Underemployed Workers

Funding Amount: $1,200,000

Department: Economic Development Department **Department Contact:** Rich Brown

Proposal Description:
Bright Future Job Training Program - $600,000 to fund the Bright Future Job Training Program. Working with the SF Community College, the Bright Future Jobs Training Program will create and support jobs training and economic mobility in the broadband, clean energy, construction, trades and computer coding industries for our unemployed and pivot-career workers.

Build Back Better Business & Workforce Project (BBBBWP) - $600,000 to fund the Build Back Better Business & Workforce Project to work with a host of local partners in the job training and workforce development ecosystem in Santa Fe. With a strong reliance on tourism, Santa Fe's economy was especially vulnerable to the economic fallout from COVID-19. Unemployment still remains high as we enter year three of the pandemic. As Santa Fe builds back, this initiative will build and expand upon proven programming and approaches to simultaneously help people get back to work, while supporting a more vibrant and diverse economy as Santa Fe builds back. Partner organizations will deliver entrepreneur and small business with programming and materials available in both English and Spanish.

Proposal Start Date: 5/2022 **Proposal End Date:** 12/2024

Performance Metrics:
Bright Future Job Training Program - Enroll at least 30 cohort per program, place at least 50% of graduates in local careers, involve at least one local business to provide matching funds or employment track, provide a two-year employment opportunity; template one program into a new industry cluster.

Build Back Better Business & Workforce Project - Libraries as Launchpads project: Four rounds of Launchpads in Spanish, two rounds in English; Total of 90 entrepreneurs "accelerated"; four community centers and/or libraries activated. Recovery Corps Internships project: 10 interns per year and 5 private sector companies as hosts = 30 interns placed. Digital Divide Workshops Project: Two in Spanish, two in English per year, 10 business owners in each = 160 served

What City of Santa Fe constituents will be affected by this initiative/project?
Bright Future Job Training Program -Veterans, post-high school graduates, essential workers looking for new career opportunities, etc.

Build Back Better Business & Workforce Project – Unemployed, underserved and underemployed Santa Feans looking for opportunities for new job training.

CITY OF SANTA FE – AMERICAN RESCUE PLAN ACT FUNDING

Project Title: College & Career Youth Workforce Corps

U.S. Department of Treasury Expenditure Category: 2.10 Assistance to Unemployed or Underemployed Workers

Funding Amount: $250,000

Department: Economic Development Department **Department Contact:** Rich Brown

Proposal Description:
In partnership with the Santa Fe Public Schools, the City will create a College & Career Youth Corps program. The Corps is a professional development, paid summer internship program for youth interested in arts-based, trades and diversified industries leadership opportunities. Interested rising high school juniors, seniors and recent graduates living in the Santa Fe will be eligible to apply. The College & Career Youth Corps strives to provide Santa Fe's youth a safe and meaningful opportunity to develop their skills, build a professional network, and prepare for the future.

Proposal Start Date: 5/2022 **Proposal End Date:** 12/2024

Performance Metrics:

- Reach and enroll 60 local youth
- Focus on job training & career development in three industries (arts, technical trades, computer coding)
- Provide opportunities for at least 50% of cohort to achieve full time employment

What City of Santa Fe constituents will be affected by this initiative/project?
Local Santa Fe Youth

CITY OF SANTA FE – AMERICAN RESCUE PLAN ACT FUNDING

Project Title: Non-profit Operational Support

U.S. Department of Treasury Expenditure Category: 2.34 Assistance to Impacted Nonprofit Organizations

Funding Amount: $600,000

Department: Community Services Department **Department Contact:** Julie Sanchez

Proposal Description:
Operational support to nonprofits providing vital community services that have been financially impacted by the COVID-19 pandemic. A Request for Applications will be released targeted to non-profits that provide assistance to those disproportionately impacted by the COVID-19 pandemic and which have themselves been financially impacted by the COVID-19 pandemic. A review panel from within Community Health and Safety, as well as committee members, will rank the proposals; the organizations will be assessed financially as to financial need and ability to serve target populations. The primary mission of the organization must be to provide one of the following vital public services to indigent populations: access to food, access to affordable housing, case management, addressing homelessness, personal safety and domestic violence, providing essential utilities (gas, water, electricity), transportation, behavioral health and grief crisis services, and/or medical/dental services. In order to be eligible for funding the contracted agency must have the following requirements met:

A. Received 501(c)(3) status on or before December 31, 2018 and has no part of its net earnings inuring to the benefit of any member, founder, contributor, or individual OR began providing a vital public service on or before December 31, 2018 and had a fiscal sponsor that is a registered nonprofit or foundation; and

B. Primarily serve City of Santa Fe residents who are considered indigent; and

C. The primary mission of the organization must be to provide one of the following vital public services to indigent populations: access to food, access to affordable housing, case management, addressing homelessness, personal safety and domestic violence, providing essential utilities (gas, water, electricity), transportation, behavioral health and grief crisis services, and/or medical/dental services; and

D. Has been negatively impacted by the pandemic, either through a loss of operating income or an increase in demand for services. Organizations must prove that they have lost at least 10% of their operating income (comparing the last audited financial statements for the fiscal year ended on or before January 1, 2020 to the most recent completed fiscal year) OR has had at least a 10% unfunded increase in direct service expenses related to providing vital public services related to the pandemic which lead to a budget shortfall (comparing the last audited financial statements for the fiscal year ended on or before January 1, 2020 to the most recent completed fiscal year) OR a 10% decrease in net operating income (comparing the last audited financial statements for the fiscal year ended on or before January 1, 2020 to the most recent completed fiscal year).; and

E. Had the equivalent of at least 2 FTE as of January 1, 2020.

F. Organizations that are at risk of significantly reducing services or permanent/temporary closure (going concern) will be prioritized when funding decisions are made.

Proposal Start Date: 5/2022 **Proposal End Date:** 12/2024

Performance Metrics:

- # nonprofits served
- Increase in capacity
- Increase in services
- Increase in clients served

What City of Santa Fe constituents will be affected by this initiative/project?
Santa Fe residents who are considered indigent that are served by non-profit organizations which were, like their clients, financially impacted by COVID.

CITY OF SANTA FE – AMERICAN RESCUE PLAN ACT FUNDING

Project Title: Behavioral Health and Community Violence Intervention Services

U.S. Department of Treasury Expenditure Category: 1.11 Community Violence Interventions

Funding Amount: $1,000,000

Department: Community Services Department **Department Contact:** Julie Sanchez

Proposal Description:
The Behavioral Health and Community Violence Intervention Services initiative will detect, track and intervene in community violence. Build resiliency in communities through collaborative efforts with the Santa Fe Police Department in training, education, advocacy and peer navigation services; building capacity and training with Santa Fe Fire Departments Alternative Response Unit. Investment in peer navigation services—training for people who have experienced behavioral health problems to be employed as case managers and mentors. These peer navigators assist efforts to reach and support communities impacted by COVID. An RFA would solicit proposals. The project would support organizations to implement evidence-based violence prevention programs and expand their capacity by allowing them to train and employ qualified navigators. This builds on work currently underway to interrupt or provide remedial support for youth violence prevention.

Proposal Start Date: 5/2022 **Proposal End Date:** 12/2024

Performance Metrics:

- Individuals served, both in becoming peer navigators and by peer navigators
- Increase in protective factors for young people at risk for violence
- Reduction in community violence
- # of activities

What City of Santa Fe constituents will be affected by this initiative/project?
Community members, especially young people, who have been in a mental health crisis and/or experience trauma related to violence.

CITY OF SANTA FE – AMERICAN RESCUE PLAN ACT FUNDING

Project Title: COVID-Safe Retrofits for City Facilities

U.S. Department of Treasury Expenditure Category: 1.14 Capital Investments or Physical Plant Changes to Public Facilities that respond to the COVID-19 public health emergency

Funding Amount: $500,000

Department: Public Works Department **Department Contact:** Regina Wheeler

Proposal Description:
Ensuring the highest-quality indoor air is a direct link to public health and can help limit airborne illness. This program provides a level of disease prevention. The capital investment projects include City-wide COVID health and safety retrofits in City facilities. See itemized list below:

- Replacement MERV13 Filters for city facilities. All city facilities now use high performance MERV13 and they have to be replaced 3 times as often as lower performance filters.
- Additional air filtration unit for Council Chambers.
- Replacement filters for portable air filtration units.
- Cubicle enhancements and other office covid safety improvements.

Proposal Start Date: 5/2022 **Proposal End Date:** 12/2024

Performance Metrics:

- Project milestones and deliverables completed on time and on budget

What City of Santa Fe constituents will be affected by this initiative/project?
City of Santa Fe staff and residents

CITY OF SANTA FE – AMERICAN RESCUE PLAN ACT FUNDING

Project Title: Parks and Trails Improvements

U.S. Department of Treasury Expenditure Category: 1.14, Capital Investments or Physical Plant Changes to Public Facilities that respond to the COVID-19 public health emergency

Funding Amount: $1,300,000

Department: Public Works Department **Department Contact:** Melissa McDonald

Proposal Description:
Outdoor activity during the pandemic helped decrease the transmission of COVID-19 and other infectious diseases. Encouragement from governments to stay outside during the COVID-19 pandemic increased usage in City of Santa Fe parks and open spaces such as the City's trail system. The capital investment projects include City-wide COVID health and safety measures in the City's parks and trails. Funds will be used to renovate one baseball field at Ragle Park on West Zia Road at Yucca to improve play and conserve water. Funds will also be used to repair trails and park equipment.

Proposal Start Date: 5/2022 **Proposal End Date:** 12/2024

Performance Metrics:

- Project milestones and deliverables completed on time and on budget

What City of Santa Fe constituents will be affected by this initiative/project?
City of Santa Fe residents, visitors and staff

CITY OF SANTA FE – AMERICAN RESCUE PLAN ACT FUNDING

Project Title: Citywide personal protective equipment and supplies for COVID Mitigation

U.S. Department of Treasury Expenditure Category: 1.5 Personal Protective Equipment

Funding Amount: $150,000

Department: Emergency Management and Safety Department **Department Contact:** Brian Williams

Proposal Description:
The Office of Emergency Management and the Safety Office will coordinate with City departments and private non-profits to support the need for personal protective equipment, operating supplies such as hand sanitizing stations and other measures to mitigate COVID-19 throughout the City.

Proposal Start Date: 5/2022 **Proposal End Date:** 12/2024

Performance Metrics:

- Total number of locations offering PPE.
- Number of locations is areas with high Social Vulnerability Index.
- Volume of distribution as a percentage of available supply.

What City of Santa Fe constituents will be affected by this initiative/project?
This project will impact all residents and visitors who seek assistance, as well as all City employees.

CITY OF SANTA FE – AMERICAN RESCUE PLAN ACT FUNDING

Project Title: Financial Reporting and Procurement

U.S. Treasury Department Expenditure Category: 7.1 Administrative Expenses

Funding Amount: $999,631

Department: Finance Department **Department Contact:** Mary McCoy

Proposal Description:
The City will use these funds for administering the $15 million grant award from the U.S. Department of the Treasury, including costs of consultants to support effective management and oversight, including consultation for ensuring compliance with legal, regulatory, and other requirements. The ARPA guidance outlines that recipients may use up to 10% of the modified total direct costs for administrative expenses. The City is electing to allocate 6.6% to administrative expenses to ensure full compliance with all federal, state, and local laws in order to limit any subsequent audits and reviews. The purpose of hiring a contractor(s) to focus on compliance is so that the City will not have any disallowed programs and/or expenses or face any claw-backs. The consultants will work together with City Departments and the Finance Department and will

- Assist the City in developing appropriate policies and procedures for use of ARPA funds;
- Ensure that the ARPA programs comply with requirements, terms and conditions of the award;
- Process the procurement of ARPA projects according to the City's procurement code;
- Complete the required financial reporting in a timely and accurate manner to the U.S. Department of the Treasury;
- Establish a central ARPA electronic file to maintain guidance and reporting
- Compile documentation to support eligibility of each program;
- Assist with the implementation of the program objectives, such as contract support for a project;
- Establish a dashboard update of each ARPA project, encumbered, spent and remaining amount to assist with managing projects and preparing expenditure reports.

Proposal Start Date: 5/2022 **Proposal End Date:** 12/2024

Performance Metrics:

- # of reports submitted on time, # of reports submitted on accurately

What City of Santa Fe constituents will be affected by this initiative/project?
Taxpayers, Internal Staff

Log # *{Finance use only}*:	
Journal # *{Finance use only}*:	

City of Santa Fe, New Mexico
BUDGET AMENDMENT RESOLUTION (BAR)

DEPARTMENT / DIVISION NAME	DATE
Community Development/Community Health & Safety/Public Works/Finance	4/18/2022

ITEM DESCRIPTION	ORG	OBJECT	PROJECT	INCREASE	DECREASE
EXPENDITURES				*{enter as positive #}*	*{enter as negative #}*
Community Services / Human Services / Grants & Services - Early Childcare Job Development	2400122	510400	COM222400A	900,000	
Community Services / Human Services / Grants & Services - Guaranteed Income Expansion	2400122	510400	COM222400B	1,500,000	
Community Services / Human Services / Grants & Services - Solutions for Unsheltered Homelessness	2400122	510400	COM222400C	1,000,000	
Affordable Housing / Housing & Comm Dev Programs / Grants & Services - Midtown Emergency Homeless Shelter	2402750	510400	AFH222400B	600,000	
Housing & Comm Dev Programs / Grants & Services - Affordable Housing/Lamplighter Inn Conversion	2402750	510400	AFH222400A	2,000,000	
Economic Development / Comm Dev Grants / Other Consulting - Public WiFi Project Phase 2	2402800	510340	ECD222400A	400,000	
Emergency Management / Comm Dev Grants / Operating Supplies - Assistance for Vulnerable Populations	2402850	530200	EMR222400A	150,000	
Economic Development / Comm Dev Grants / Grants & Services - Small Business Support	2402800	510400	ECD222400B	2,500,000	
Economic Development / Comm Dev Grants / Other Consulting - Job Training	2402800	510340	ECD222400C	1,200,000	
REVENUES				*{enter as negative #}*	*{enter as positive #}*
Community Services / Human Services / US Treasury ARPA Grant - Early Childcare Job Development	2400122	490615	COM222400A	(900,000)	
Community Services / Human Services / US Treasury ARPA Grant - Guaranteed Income Expansion	2400122	490615	COM222400B	(1,500,000)	
Community Services / Human Services / US Treasury ARPA Grant - Solutions for Unsheltered Homelessness	2400122	490615	COM222400C	(1,000,000)	
Housing & Comm Dev Programs / US Treasury ARPA Grant - Midtown Emergency Homeless Shelter	2402750	490615	AFH222400B	(600,000)	
Housing & Comm Dev Programs / US Treasury ARPA Grant - Affordable Housing/Lamplighter Inn Conversion	2402750	490615	AFH222400A	(2,000,000)	
Economic Development / Comm Dev Grants / US Treasury ARPA Grant - Public WiFi Project Phase 2	2402800	490615	ECD222400A	(400,000)	
Emergency Management / Comm Dev Grants / US Treasury ARPA Grant - Assistance for Vulnerable Populations	2402850	490615	EMR222400A	(150,000)	
Economic Development / Comm Dev Grants / US Treasury ARPA Grant - Small Business Support	2402800	490615	ECD222400B	(2,500,000)	
Economic Development / Comm Dev Grants / US Treasury ARPA Grant - Job Training	2402800	490615	ECD222400C	(1,200,000)	
				$ -	$ -

JUSTIFICATION: *(use additional page if needed)*
--Attach supporting documentation/memo

Appropriation of American Rescue Plan (ARPA) Grants for various purposes - see attached memo and documentation.

[BAR p. 1 of 2]

{Complete section below if BAR results in a net change to ANY Fund}	
Fund(s) Affected	Fund Balance Increase/(Decrease)
TOTAL:	0

Andy Hopkins — 4/18/2022
Prepared By *{print name}* — Date

N/A
Division Director Signature *{optional}* — Date

Mary McCoy
Department Director Signature — Date

{Use this form for Finance Committee/ City Council agenda items ONLY}

CITY COUNCIL APPROVAL

City Council Approval Date

Agenda Item #:

Alexis Lotero
Alexis Lotero (Apr 22, 2022 13:49 MDT)
Budget Officer — Date

N/A
Finance Director *{≤ $5,000}* — Date

N/A
City Manager *{≤ $60,000}* — Date

Log # *{Finance use only}*:	*[see BAR p. 1 for log/journal]*
Journal # *{Finance use only}*:	*[see BAR p. 1 for log/journal]*

City of Santa Fe, New Mexico
BUDGET AMENDMENT RESOLUTION (BAR)

DEPARTMENT / DIVISION NAME	DATE
Community Development/Community Health & Safety/Public Works/Finance	4/18/2022

ITEM DESCRIPTION	ORG	OBJECT	PROJECT	INCREASE	DECREASE
EXPENDITURES				*{enter as positive #}*	*{enter as negative #}*
Economic Development / Comm Dev Grants / Other Consulting - College & Career Youth Workforce Corps	2402800	510340	ECD222400D	250,000	
Community Services / Human Services / Grants & Services - Direct Support for Non-Profits	2400122	510400	COM222400F	600,000	
Community Services / Human Services / Grants & Services - Behavioral Health & Community Violence Intervention Svcs	2400122	510400	COM222400G	1,000,000	
Public Works / Facilities / Comm Dev Grants / Furniture & Fixtures - COVID-Safe Retrofits for City Facilities	2400431	570600	PWD222400A	500,000	
Public Works / Parks Division / Comm Dev Grants / WIP Construction - Parks and Trails Improvements	2404150	572970	PWD222400B	1,300,000	
Emergency Management / Comm Dev Grants / Operating Supplies - Citywide PPE and Supplies for COVID Mitigation	2402850	530200	EMR222400B	150,000	
Finance / Comm Dev Grants / Professional Contracts - Administrative Expense	2401501	510300	FIN222400A	999,631	
REVENUES				*{enter as negative #}*	*{enter as positive #}*
Economic Development / Comm Dev Grants / US Treasury ARPA Grant - College & Career Youth Workforce Corps	2402800	490615	ECD222400D	(250,000)	
Community Services / Human Services / US Treasury ARPA Grant - Direct Support for Non-Profits	2400122	490615	COM222400F	(600,000)	
Community Services / Human Services / US Treasury ARPA Grant - Behavioral Health & Community Violence Intervention	2400122	490615	COM222400G	(1,000,000)	
Public Works / Facilities / Comm Dev Grants / US Treasury ARPA Grant - COVID-Safe Retrofits for City Facilities	2400431	490615	PWD222400A	(500,000)	
Public Works / Parks Division / Comm Dev Grants / US Treasury ARPA Grant - Parks and Trails Improvements	2404150	490615	PWD222400B	(1,300,000)	
Emergency Management / US Treasury ARPA Grant - Citywide PPE and Supplies for COVID Mitigation	2402850	490615	EMR222400B	(150,000)	
Finance / Comm Dev Grants / US Treasury ARPA Grant - Administrative Expense	2401501	490615	FIN222400A	(999,631)	
				$ -	$ -

JUSTIFICATION: *(use additional page if needed)*
--Attach supporting documentation/memo

Appropriation of American Rescue Plan (ARPA) Grants for various purposes - see attached memo and documentation.

[BAR p. 2 of 2]

{Complete section below if BAR results in a net change to ANY Fund}	
Fund(s) Affected	Fund Balance Increase/(Decrease)
TOTAL:	0

Andy Hopkins — Prepared By *{print name}* — 4/18/2022 Date

N/A — Division Director Signature *{optional}* — Date

[see BAR p. 1 for signatures] — Department Director Signature — Date

{Use this form for Finance Committee/ City Council agenda items ONLY}

CITY COUNCIL APPROVAL

City Council Approval Date

Agenda Item #:

[see BAR p. 1 for signatures] — Budget Officer — Date

N/A — Finance Director *{≤ $5,000}* — Date

N/A — City Manager *{≤ $60,000}* — Date

Item# 23-0700
Munis Contract# 3204464

RECOVERY FUNDS SUBRECIPIENT
CONTRACT BETWEEN CITY OF SANTA FE AND THE LIFE LINK
FOR SERVICES

THIS AGREEMENT is made and entered into by and between the City of Santa Fe, herein after referred to as the "City", and **The Life Link** herein after referred to as the "Contractor."

RECITALS

WHEREAS, the City, as a recipient of a State and Local Fiscal Recovery Funds (SLFRF) award, has substantial discretion to use the award funds in the ways that best suit the needs of the City if such use fits into one of the following four statutory categories:

1. To respond to the COVID-19 public health emergency or its negative economic impacts;
2. To respond to workers performing essential work during the COVID-19 public health emergency by providing premium pay to eligible workers of the recipient that are performing such essential work, or by providing grants to eligible employers that have eligible workers who perform essential work;
3. For the provision of government services, to the extent of the reduction in revenue of such recipient due to the COVID–19 public health emergency, relative to revenues collected in the most recent full fiscal year of the recipient prior to the emergency; or
4. To make necessary investments in water, sewer, or broadband infrastructure;

WHEREAS this Contract falls within the **first** statutory category;

WHEREAS, recipients are responsible for ensuring that any procurement using SLFRF funds, or payments under procurement contracts using such funds, Coronavirus State and Local Fiscal Recovery Funds Compliance and Reporting Guidance are consistent with the procurement standards set forth in the Uniform Guidance at 2 CFR 200.317 through 2 CFR 200.327, as applicable;

WHEREAS, the Uniform Guidance establishes in 2 CFR 200.319 that all procurement transactions for property or services must be conducted in a manner providing full and open competition, consistent with standards outlined in 2 CFR 200.320, which allows for non-competitive procurements only in circumstances where at least one of the conditions below is true: the item is below the micro-purchase threshold; the item is only available from a single source; the public exigency or emergency will not permit a delay from publicizing a competitive solicitation; or after solicitation of a number of sources, competition is determined inadequate; and

WHEREAS, Subrecipients under the SLFRF program are entities that receive a subaward from a recipient to carry out the purposes (program or project) of the SLFRF award on behalf of the recipient.

IT IS MUTUALLY AGREED BETWEEN THE PARTIES:

1. **Definitions**

A. "Products and Services Schedule" refers to the complete list of products and services offered under this Agreement and the price for each. Product and service descriptions may be amended with the prior approval of the Agreement Administrator. New products and services shall not be added to the Products and Services Schedule.

B. "Business Hours" means 8:00 a.m. to 5:00 p.m. Mountain Time.

C. "Subrecipient" means an entity, usually but not limited to non–Federal entities, that receives a subaward from a pass-through entity to carry out part of a Federal award; but does not include an individual that is a beneficiary of such award. 2 C.F.R. § 200.1

D. "You" and "your" refers to **The Life Link.** "We," "us" or "our" refers to the City and whose accounts are created under this Agreement.

E. "Good Neighbor Agreement" means a collaborative working agreement created by the site owner, service provider, and neighbors, including, at a minimum, owners and/or occupants of residences and businesses directly across from the SOS on Old Pecos Trail, Arroyo Chamiso Road, and St. Michaels Drive.

2. **Scope of Work**

The contractor agrees to perform the work as follows:

A. Submit to the City, before operations begin, a final draft of policies and procedures which encompass the Safe Outdoor Space (SOS) site rules and operating procedures including:
   a. Day to day operations and services
   b. Application and Selection Process of Applicants
   c. Intake and Participation Agreement
   d. Data Collection
   e. Reasonable Accommodations
   f. Disciplinary Action for Violations against Participation Agreement
   g. Grievance Process
   h. Referral Procedure if the client is asked to leave the program.
   i. Job descriptions for staffing of the SOS.
   j. Good Neighbor Agreement

B. Provide 24/7 staffing to the SOS documented as follows:
   a. Staff on the payroll must be directly involved in the daily operations of the safe outdoor space.
   b. Time sheets and activity reports are required and the number of hours on the payroll must match the timesheets.

c. Activity reports must delineate the activities of daily operations, as outlined in Appendix A. Eligible activities include:
    i. Outreach
    ii. Case Management (goal setting, accessing basic needs, referrals to outside services, transportation to appointments)
    iii. Housing Navigation (voucher applications, apartment showings, housing applications, housing assessments, rental assistance)
    iv. Assessment (VI-SPDAT, Treat First, DLA)
    v. Administration (contract management, staffing)
    vi. Life Skills Training (DLA activities)
    vii. Employment (supportive employment, job applications, resume building, social security applications if employment is not an option)
    viii. Security

C. Provide services including emergency shelter, case management, housing navigation, assessment, skills training, employment, and security.
D. Use CONNECT/Unite Us for Case Management referrals.
E. Serve a minimum of 40 unsheltered adult households in the first year of operations.
F. Participate in the NM Coordinated Entry System (CES), Community Case Conferencing, HMIS and Quality Data Improvement, managed by the New Mexico Coalition to End Homelessness (NMCEH).
    a. Ensure all staff are trained in completing the VI-SPDAT and navigating the CES.
    b. Ensure, at minimum, case management staff are licensed and trained in HMIS.
    c. Complete a VI-SPDAT for every person staying at the SOS.
    d. Participate fully in weekly case conferencing, taking a strong advocacy role to appropriately house individuals from the SOS.
    e. Participate fully in quality improvement activities including outreach, data collection and community collaboration.
G. Report to the city on a quarterly basis on the use of ARPA funds, program outcomes achieved and specifying eligibility of people served using forms provided in Appendix B.
H. Facilitate weekly meetings with the Site Owner to review:
    a. Unit Maintenance
    b. Property Maintenance
    c. Owner, operator, guest, and neighborhood concerns
    d. Coordination of Services
I. Conduct Outreach to identify and engage individuals who are unsheltered and work to assess and refer them to the Safe Outdoor Space as well as added to CES.
J. Provide ongoing training and development to site staff including, but not limited to, trauma-informed care, crisis intervention and de-escalation, housing first and harm reduction practices.

B. Performance measures. The disproportionately impacted population this project will serve are unsheltered homeless individuals who are unable or unwilling to stay in congregate shelters due to fear of contracting COVID 19 and/or the inability/unwillingness to be vaccinated against the virus, which is a requirement for even the lowest barrier shelters.

C. The Life Link understands that this contract represents a subaward of SLFRF funds, agrees to maintain records to satisfy all compliance requirements for use of SLFRF, and agrees to all reporting requirements for expenditures of SLFRF funds.

3. **Compensation**

The City shall pay to the Contractor in full payment for services satisfactorily performed based upon deliverables outlined in the Scope of Work. The total compensation under this Agreement shall not exceed $440,192.00, including New Mexico gross receipts tax. This amount is a maximum and not a guarantee that the work assigned to be performed by Contractor under this Agreement shall equal the amount stated herein. The Parties do not intend for the Contractor to continue to provide Services without compensation when the total compensation amount is reached. Contractor is responsible for notifying the City when the Services provided under this Agreement reach the total compensation amount. In no event will the Contractor be paid for Services provided in excess of the total compensation amount without this Agreement being amended in writing prior to services, in excess of the total compensation amount being provided.

C. Payment shall be made upon acceptance of each Deliverable and upon the receipt and acceptance of a detailed, certified Payment Invoice. Payment will be made to the Contractor's designated mailing address. In accordance with Section 13-1-158 NMSA 1978, the City shall determine if the product or services provided meet specifications. Until the products or services have been accepted in writing by the City, the City shall not pay for any products or services. Unless otherwise agreed upon between the City and the Contractor, within thirty (30) days from the date the City receives written notice from the Contractor that payment is requested for services or within thirty (30) days from the receipt of products, the City shall issue a written certification (by letter or email) of complete or partial acceptance or rejection of the products or services. Unless the City gives notice of rejection within the specified time period, the products or services will be deemed to have been accepted. Payment shall be tendered to the Contractor within thirty (30) days of the date of written certification of acceptance. All Payment Invoices MUST BE received by the City no later than fifteen (15) days after the termination of this Agreement. Payment Invoices received after such date WILL NOT BE PAID.

D. Retainage. Not Applicable – The Parties agree there is no retainage.

E. Performance Bond. Not Applicable. The Parties agree there is no Performance Bond.

F. The contractor may use SLFRF funds to cover eligible costs incurred during the period that begins on March 3, 2021 and ends on December 31, 2024, if the award funds for the obligations incurred by December 31, 2024 are expended by December 31, 2026. Costs for projects incurred by the subrecipient prior to March 3, 2021 are not eligible, as provided for in

Treasury's final rule. Any funds not obligated or expended for eligible uses by the timelines above must be returned to Treasury, including any unobligated or unexpended funds that have been provided to subrecipients and contractors as part of the award closeout process pursuant to 2 C.F.R. 200.344(d).

4. **Term**

THIS AGREEMENT SHALL NOT BECOME EFFECTIVE UNTIL APPROVED IN WRITING BY THE CITY. This Agreement shall begin on date approved by the City and end on December 31st, 2024. In no event will the term exceed the duration allowed by statute, NMSA 1978, § 13-1-150.

5. **Default and Force Majeure**

The City reserves the right to cancel all or any part of any orders placed under this contract without cost to the City, if the Contractor fails to meet the provisions of this contract and, except as otherwise provided herein, to hold the Contractor liable for any excess cost occasioned by the City due to the Contractor's default. The Contractor shall not be liable for any excess costs if failure to perform the order arises out of causes beyond the control and without the fault or negligence of the Contractor; such causes include, but are not restricted to, acts of God or the public enemy, acts of the State or Federal Government, fires, floods, epidemics, quarantine restrictions, strikes, freight embargoes, unusually severe weather and defaults of sub-contractors due to any of the above, unless the City shall determine that the supplies or services to be furnished by the sub-contractor were obtainable from other sources in sufficient time to permit the Contractor to meet the required delivery scheduled. The rights and remedies of the City provided in this paragraph shall not be exclusive and are in addition to any other rights now being provided by law or under this contract.

6. **Termination**

A. Grounds. The City may terminate this Agreement for convenience or cause. For contracts within their authority, the City Manager or their designee is authorized to provide the notice of termination, otherwise such notice of termination shall be provided by the Mayor or their designee as authorized by the Governing Body. The Contractor may only terminate this Agreement based upon the City's uncured, material breach of this Agreement.

B. Notice; City Opportunity to Cure.

1) Except as otherwise provided in Paragraphs 7.A and 17, the City shall give Contractor written notice of termination at least thirty (30) days prior to the intended date of termination.

2) Contractor shall give City written notice of termination at least thirty (30) days prior to the intended date of termination, which notice shall (i) identify all the City's material breaches of this Agreement upon which the termination is based and (ii) state what the City must do to cure such material breaches. Contractor's notice of termination shall only be effective (i) if the City does not cure all material breaches within the thirty (30) day notice period

or (ii) in the case of material breaches that cannot be cured within thirty (30) days, the City does not, within the thirty (30) day notice period, notify the Contractor of its intent to cure and begin with due diligence to cure the material breach.

3) Notwithstanding the foregoing, this Agreement may be terminated immediately upon written notice to the Contractor (i) if the Contractor becomes unable to perform the services contracted for, as determined by the City; (ii) if, during the term of this Agreement, the Contractor is suspended or debarred by the City; or (iii) the Agreement is terminated pursuant to Paragraph 17, "Appropriations", of this Agreement.

C. Liability. Except as otherwise expressly allowed or provided under this Agreement, the City's sole liability upon termination shall be to pay for acceptable work performed prior to the Contractor's receipt or issuance of a notice of termination; provided, however, that a notice of termination shall not nullify or otherwise affect either party's liability for pre-termination defaults under or breaches of this Agreement. The Contractor shall submit an invoice for such work within thirty (30) days of receiving or sending the notice of termination. *THIS PROVISION IS NOT EXCLUSIVE AND DOES NOT WAIVE THE CITY'S OTHER LEGAL RIGHTS AND REMEDIES CAUSED BY THE CONTRACTOR'S DEFAULT/BREACH OF THIS AGREEMENT.*

7. **Amendment**

A. This Agreement shall not be altered, changed or amended except by instrument in writing executed by the parties hereto and all other required signatories.

B. If the City proposes an amendment to the Agreement to unilaterally reduce funding due to budget or other considerations, the Contractor shall, within thirty (30) days of receipt of the proposed Amendment, have the option to terminate the Agreement, pursuant to the termination provisions as set forth in Paragraph 7 herein, or to agree to the reduced funding.

8. **Status of Contractor**

The Contractor, and Contractor's agents and employees, are independent Contractors for the City and are not employees of the City. The Contractor, and Contractor's agents and employees, shall not accrue leave, retirement, insurance, bonding, use of City vehicles, or any other benefits afforded to employees of the City as a result of this Agreement. The Contractor acknowledges that all sums received hereunder are personally reportable by the Contractor for income tax purposes, including without limitation, self-employment tax and business income tax. The Contractor agrees not to purport to bind the City unless the Contractor has written authority to do so, and then only within the strict limits of that authority.

9. **Assignment**

The Contractor shall not assign or transfer any interest in this Agreement or assign any claims for money due or to become due under this Agreement without the prior written approval of the City.

10. **Subcontracting**

The Contractor shall not subcontract any portion of the services to be performed under this Agreement without the prior written approval of the City. No such subcontract shall relieve the primary Contractor from its obligations and liabilities under this Agreement, nor shall any subcontract obligate direct payment from the City.

11. **Non-Collusion**

In signing this Agreement, the Contractor/Contractor certifies the Contractor/Contractor has not, either directly or indirectly, entered into action in restraint of free competitive bidding in connection with this offer submitted to the City.

12. **Inspection of Plant**

The City may inspect, at any reasonable time during Contractor's regular business hours and upon prior written notice, the Contractor's plant or place of business, or any subcontractor's plant or place of business, which is related to the performance of this contract.

13. **Commercial Warranty**

The Contractor agrees that the tangible personal property or services furnished under this Agreement shall be covered by the most favorable commercial warranties the Contractor gives to any customer for such tangible personal property or services, and that the rights and remedies provided herein shall extend to the City and are in addition to and do not limit any rights afforded to the City by any other clause of this order. Contractor agrees not to disclaim warranties of fitness for a particular purpose or merchantability.

14. **Condition of Proposed Items**

Where tangible personal property is a part of this Agreement, all proposed items are to be NEW and of most current production, unless otherwise specified.

15. **Records and Audit**

During the term of this Agreement and for five years thereafter, the Contractor shall maintain detailed records pertaining to the services rendered and products delivered. These records shall be subject to inspection by the City, the State Auditor and other appropriate state and federal authorities. The City shall have the right to audit billings both before and after payment. Payment under this Agreement shall not foreclose the right of the City to recover excessive or illegal payments.

16. **Appropriations**

The terms of this Agreement, and any orders placed under it, are contingent upon sufficient appropriations and authorization being made by the Governing Body for the performance of this Agreement. If sufficient appropriations and authorization are not made by the legislature, this Agreement, and any orders placed under it, shall terminate upon written

notice being given by the City to the Contractor. The City's decision as to whether sufficient appropriations are available shall be accepted by the Contractor and shall be final. If the City proposes an amendment to the Agreement to unilaterally reduce funding, the Contractor shall have the option to terminate the Agreement or to agree to the reduced funding, within thirty (30) days of receipt of the proposed amendment.

17. **Release**

The Contractor, upon final payment of the amount due under this Agreement, releases the City, its officers and employees, from all liabilities, claims and obligations whatsoever arising from or under this Agreement. The Contractor agrees not to purport to bind the City, unless the Contractor has express written authority to do so, and then only within the strict limits of that authority.

18. **Confidentiality**

Any confidential information provided to or developed by the Contractor in the performance of this Agreement shall be kept confidential and shall not be made available to any individual or organization by the Contractor without prior written approval by the City.

19. **Conflict of Interest**

A. The Contractor represents and warrants that it presently has no interest and, during the term of this Agreement, shall not acquire any interest, direct or indirect, which would conflict in any manner or degree with the performance or services required under the Agreement. The Contractor shall comply with any applicable provisions of the New Mexico Governmental Conduct Act and the New Mexico Financial Disclosures Act.

B. The Contractor further represents and warrants that it has complied with, and, during the term of this Agreement, will continue to comply with, and that this Agreement complies with all applicable provisions of the Governmental Conduct Act, Chapter 10, Article 16 NMSA 1978.

C. Contractor's representations and warranties in Paragraphs A and B of this Paragraph are material representations of fact upon which the City relied when this Agreement was entered into by the parties. Contractor shall provide immediate written notice to the City if, at any time during the term of this Agreement, Contractor learns that Contractor's representations and warranties in Paragraphs A and B of this Paragraph 20 were erroneous on the effective date of this Agreement or have become erroneous by reason of new or changed circumstances. If it is later determined that Contractor's representations and warranties in Paragraphs A and B of this Paragraph 20 were erroneous on the effective date of this Agreement or have become erroneous by reason of new or changed circumstances, in addition to other remedies available to the City and notwithstanding anything in the Agreement to the contrary, the City may immediately terminate the Agreement.

D. All terms defined in the Governmental Conduct Act have the same meaning in this section.

20. **Approval of Contractor Representative(s)**

The City reserves the right to require a change in Contractor representative(s) if the assigned representative(s) are not, in the opinion of the City, adequately serving the needs of the City.

21. **Scope of Agreement; Merger**

This Agreement incorporates all the agreements, covenants, and understandings between the parties hereto concerning the subject matter hereof, and all such covenants, agreements and understandings have been merged into this written Agreement. No prior agreements or understandings, verbal or otherwise, of the parties or their agents shall be valid or enforceable unless embodied in this Agreement.

22. **Notice**

The Procurement Code, Sections 13-1-28 through 13-1-199 NMSA 1978, imposes civil and criminal penalties for its violation. In addition, the New Mexico criminal statutes impose felony penalties for bribes, gratuities and kickbacks.

23. **Equal Opportunity Compliance**

The Contractor agrees to abide by all federal and state laws, and local Ordinances, pertaining to equal employment opportunity. In accordance with all such laws, rules, and regulations, the Contractor agrees to assure that no person in the United States shall on the grounds of race, religion, color, national origin, ancestry, sex, age, physical or mental handicap, or serious medical condition, spousal affiliation, sexual orientation or gender identity, be excluded from employment with or participation in, be denied the benefits of, or be otherwise subjected to discrimination under any program or activity performed under this Agreement. If Contractor is found not to be in compliance with these requirements during the life of this Agreement, Contractor agrees to take appropriate steps to correct these deficiencies.

24. **Indemnification**

The Contractor shall hold the City and its employees harmless and shall indemnify the City and its employees against any and all claims, suits, actions, liabilities and costs of any kind, including attorney's fees for personal injury or damage to property arising from the acts or omissions of the Contractor, its agents, officers, employees or subcontractors. The Contractor shall not be liable for any injury or damage as a result of any negligent act or omission committed by the City, its officers or employees.

25. **New Mexico Tort Claims Act**

Any liability incurred by the City of Santa Fe in connection with this Agreement is subject to the immunities and limitations of the New Mexico Tort Claims Act, Section 41-4-1, et. seq. NMSA 1978, as amended. The City and its "public employees" as defined in the New Mexico Tort Claims Act, do not waive sovereign immunity, do not waive any defense and do not waive any limitation of liability pursuant to law. No provision in this Agreement modifies or waives any provision of the New Mexico Tort Claims Act.

26. **Applicable Law**

The laws of the State of New Mexico shall govern this Agreement, without giving effect to its choice of law provisions. Venue shall be proper only in a New Mexico court of competent jurisdiction in accordance with NMSA 1978, § 38-3-2. By execution of this Agreement, Contractor acknowledges and agrees to the jurisdiction of the courts of the State of New Mexico over any and all lawsuits arising under or out of any term of this Agreement.

27. **Limitation of Liability**

The Contractor's liability to the City, for any cause whatsoever shall be limited to the purchase price paid to the Contractor for the products and services that are the subject of the City's, claim. The foregoing limitation does not apply to paragraph 25 of this Agreement or to damages resulting from personal injury caused by the Contractor's negligence.

28. **Incorporation by Reference and Precedence**

If this Agreement has been procured pursuant to a request for proposals, this Agreement is derived from (1) the request for proposal, (including any written clarifications to the request for proposals and any City response to questions); (2) the Contractor's best and final offer; and (3) the Contractor's response to the request for proposals.

In the event of a dispute under this Agreement, applicable documents will be referred to for the purpose of clarification or for additional detail in the following order of precedence: (1) amendments to the Agreement in reverse chronological order; (2) the Agreement, including the scope of work and all terms and conditions thereof; (3) the request for proposals, including attachments thereto and written responses to questions and written clarifications; (4) the Contractor's best and final offer if such has been made and accepted by the City; and (5) the Contractor's response to the request for proposals.

29. **Workers' Compensation**

The Contractor agrees to comply with state laws and rules applicable to workers' compensation benefits for its employees. If the Contractor fails to comply with the Workers' Compensation Act and applicable rules when required to do so, this Agreement may be terminated by the City.

30. **Inspection**

If this contract is for the purchase of tangible personal property (goods), final inspection and acceptance shall be made at Destination. Tangible personal property rejected at Destination for non-conformance to specifications shall be removed at Contractor's risk and expense promptly after notice of rejection and shall not be allowable as billable items for payment.

31. **Inspection of Services**

If this contract is for the purchase of services, the following terms shall apply.

A. Services, as used in this Article, include services performed, workmanship, and material furnished or utilized in the performance of services.

B. The Contractor shall provide and maintain an inspection system acceptable to the City covering the services under this Agreement. Complete records of all inspection work performed by the Contractor shall be maintained and made available to the City and for as long thereafter as the Agreement requires. The City has the right to inspect and test all services contemplated under this Agreement to the extent practicable at all times and places during the term of the Agreement. The City shall perform inspections and tests in a manner that will not unduly delay or interfere with Contractor's performance.

C. If the City performs inspections or tests on the premises of the Contractor or a subcontractor, the Contractor shall furnish, and shall require subcontractors to furnish, at no increase in contract price, all reasonable facilities and assistance for the safe and convenient performance of such inspections or tests.

D. If any part of the services do not conform with the requirements of this Agreement, the City may require the Contractor to re-perform the services in conformity with the requirements of this Agreement at no increase in contract amount. When the defects in services cannot be corrected by re-performance, the City may:

(1) require the Contractor to take necessary action(s) to ensure that future performance conforms to the requirements of this Agreement; and

(2) reduce the contract price to reflect the reduced value of the services performed.

E. If the Contractor fails to promptly re-perform the services or to take the necessary action(s) to ensure future performance in conformity with the requirements of this Agreement, the City may:

(1) by contract or otherwise, perform the services and charge to the Contractor any cost incurred by the City that is directly related to the performance of such service; or

(2) terminate the contract for default.

32. **Insurance**

If the services contemplated under this Agreement will be performed on or in City facilities or property, Contractor shall maintain in force during the entire term of this Agreement, the following insurance coverage(s), naming the City as additional insured.

A. Commercial General Liability insurance shall be written on an occurrence basis and be a broad as ISO Form CG 00 01 with limits not less than $2,000,000 per occurrence and $2,000,000 in the aggregate for claims against bodily injury, personal and advertising injury, and

property damage. Said policy shall include broad form Contractual Liability coverage and be endorsed to name the City of Santa Fe their officials, officers, employees, and agents as additional insureds.

B. Business Automobile Liability insurance for all owned, non-owned automobiles, with a combined single limit not less than $1,000,000 per accident.

C. Broader Coverage and Limits. The insurance requirements under this Agreement shall be the greater of (1) the minimum coverage and limits specified in this Agreement, or (2) the broader coverage and maximum limits of coverage of any insurance policy or proceeds available to the Named Insured. It is agreed that these insurance requirements shall not in any way act to reduce coverage that is broader or that includes higher limits than the minimums required herein. No representation is made that the minimum insurance requirements of this Agreement are sufficient to cover the obligations of Contractor hereunder.

D. Contractor shall maintain the above insurance for the term of this Agreement and name the City as an additional insured and provide for 30 days cancellation notice on any Certificate of Insurance form furnished by Contractor. Such certificate shall also specifically state the coverage provided under the policy is primary over any other valid and collectible insurance and provide a waiver of subrogation.

33. **Impracticality of Performance**

A party shall be excused from performance under this Agreement for any period that the party is prevented from performing as a result of an act of God, strike, war, civil disturbance, epidemic, or court order, provided that the party has prudently and promptly acted to take any and all steps that are within the party's control to ensure performance. Subject to this provision, such non-performance shall not be deemed a default or a ground for termination.

34. **Invalid Term or Condition**

If any term or condition of this Agreement shall be held invalid or unenforceable, the remainder of this Agreement shall not be affected and shall be valid and enforceable.

35. **Enforcement of Agreement**

A party's failure to require strict performance of any provision of this Agreement shall not waive or diminish that party's right thereafter to demand strict compliance with that or any other provision. No waiver by a party of any of its rights under this Agreement shall be effective unless express and in writing, and no effective waiver by a party of any of its rights shall be effective to waive any other rights.

36. **Patent, Copyright and Trade Secret Indemnification**

A. The Contractor shall defend, at its own expense, the City against any claim that any product or service provided under this Agreement infringes any patent, copyright to

trademark in the United States or Puerto Rico, and shall pay all costs, damages and attorneys' fees that a court finally awards as a result of any such claim. In addition, if any third party obtains a judgment against the City based upon Contractor's trade secret infringement relating to any product or services provided under this Agreement, the Contractor agrees to reimburse the City for all costs, attorneys' fees and amount of the judgment. To qualify for such defense and or payment, the City shall:

1) give the Contractor prompt written notice within 48 hours of any claim;
2) allow the Contractor to control the defense of settlement of the claim; and
3) cooperate with the Contractor in a reasonable way to facilitate the defense or settlement of the claim.

B. If any product or service becomes, or in the Contractor's opinion is likely to become the subject of a claim of infringement, the Contractor shall at its option and expense:

1) provide the City the right to continue using the product or service and fully indemnify the City against all claims that may arise out of the City's use of the product or service;

2) replace or modify the product or service so that it becomes non-infringing; or,

3) accept the return of the product or service and refund an amount equal to the value of the returned product or service, less the unpaid portion of the purchase price and any other amounts, which are due to the Contractor. The Contractor's obligation will be void as to any product or service modified by the City to the extent such modification is the cause of the claim.

37. **Survival**

The Agreement paragraphs titled "Patent, Copyright, Trademark, and Trade Secret Indemnification; Indemnification; and Limit of Liability" shall survive the expiration of this Agreement. Software licenses, leases, maintenance and any other unexpired Agreements that were entered into under the terms and conditions of this Agreement shall survive this Agreement.

38. **Disclosure Regarding Responsibility**

A. Any prospective Contractor and any of its Principals who enter into a contract greater than sixty thousand dollars ($60,000.00) with any City for professional services, tangible personal property, services or construction agrees to disclose whether the Contractor, or any principal of the Contractor's company is presently debarred, suspended, proposed for debarment, or declared ineligible for award of contract by any federal entity, state agency or local public body.

B. Principal, for the purpose of this disclosure, means an officer, director, owner, partner, or a person having primary management or supervisory responsibilities within a business entity or related entities.

C. The Contractor shall provide immediate written notice to the City if, at any time during the term of this Agreement, the Contractor learns that the Contractor's disclosure was at

any time erroneous or became erroneous by reason of changed circumstances.

D. A disclosure that any of the items in this requirement exist will not necessarily result in termination of this Agreement. However, the disclosure will be considered in the determination of the Contractor's responsibility and ability to perform under this Agreement. Failure of the Contractor to furnish a disclosure or provide additional information as requested will be grounds for immediate termination of this Agreement pursuant to the conditions set forth in Paragraph 7 of this Agreement.

E. Nothing contained in the foregoing shall be construed to require establishment of a system of records in order to render, in good faith, the disclosure required by this document. The knowledge and information of a Contractor is not required to exceed that which is the normally possessed by a prudent person in the ordinary course of business dealings.

F. The disclosure requirement provided is a material representation of fact upon which reliance was placed when making an award and is a continuing material representation of the facts during the term of this Agreement. If during the performance of the contract, the Contractor is indicted for or otherwise criminally or civilly charged by any government entity (federal, state or local) with commission of any offenses named in this document the Contractor must provide immediate written notice to the City. If it is later determined that the Contractor knowingly rendered an erroneous disclosure, in addition to other remedies available to the Government, the City may terminate the involved contract for cause. Still further the City may suspend or debar the Contractor from eligibility for future solicitations until such time as the matter is resolved to the satisfaction of the City.

39. **Suspension, Delay or Interruption of Work**

The City may, without cause, order the Contractor, in writing, to suspend, delay or interrupt the work in whole or in part for such period as the City may determine. The contract sum and contract time shall be adjusted for increases in cost and/or time associated with Contractor's compliance therewith. Upon receipt of such notice, Contractor shall leave the jobsite and any equipment in a safe condition prior to departing. Contractor must assert rights to additional compensation within thirty (30) days after suspension of work is lifted and return to work is authorized. Any compensation requested for which entitlement is granted and the contract sum adjusted, shall have profit included (for work completed) and for cost only (not profit) for Contractor costs incurred directly tied to the suspension itself and not otherwise covered by Contract remedy. Any change in Total Compensation must be reflected in an Amendment executed pursuant to Section 8 of this Agreement.

40. **Notification**

Either party may give written notice to the other party in accordance with the terms of this Paragraph. Any written notice required or permitted to be given hereunder shall be deemed to have been given on the date of delivery if delivered by personal service or hand delivery or three (3) business days after being mailed.

To the City:

Youth and Family Services Division

Brittany Rodriguez, Program Manager

PO Box 909

Santa Fe, New Mexico, 87504-0909

bcrodriguez@santafenm.gov

To the Contractor:

The Life Link

Michael DeBernardi, CEO

2325 Cerrillos Road, Santa Fe, NM

drdebernardi@thelifelink.org

Either party may change its representative or address above by written notice to the other in accordance with the terms of this Paragraph. The carrier for mail delivery and notices shall be the agent of the sender.

41. **Succession**

This Agreement shall extend to and be binding upon the successors and assigns of the parties.

IN WITNESS WHEREOF, the Parties have executed this Agreement as of the date of the signature by the required approval authorities below.

CITY OF SANTA FE:

ALAN WEBBER, MAYOR

DATE: Dec 21, 2023

THE LIFE LINK:

MICHAEL DeBERNARDI, CEO

DATE: Nov 30, 2023

CRS# 02-097780-00-8

Registration # 29352

ATTEST:

Geralyn Cardenas (Dec 21, 2023 11:46 MST)

GERALYN CARDENAS, INTERIM CITY CLERK

GB MTG 12/13/2023 XIV

CITY ATTORNEY'S OFFICE:

ASSISTANT CITY ATTORNEY

APPROVED FOR FINANCES:

Emily K. Oster
Emily K. Oster (Dec 1, 2023 18:07 MST)

EMILY OSTER, FINANCE DIRECTOR

510400/2400122 AL

Life Link Amend-1-Packet

Final Audit Report 2024-11-08

Created:	2024-11-08
By:	Justin Gonzales (jmgonzales@santafenm.gov)
Status:	Signed
Transaction ID:	CBJCHBCAABAAc4b9K2aSHcCKVoqtFMAhgdcrl87BZGDf

"Life Link Amend-1-Packet" History

Document created by Justin Gonzales (jmgonzales@santafenm.gov)
2024-11-08 - 4:48:58 PM GMT- IP address: 63.232.20.2

Document emailed to JULIE SANCHEZ (jjsanchez@santafenm.gov) for signature
2024-11-08 - 4:50:10 PM GMT

Email viewed by JULIE SANCHEZ (jjsanchez@santafenm.gov)
2024-11-08 - 4:57:52 PM GMT- IP address: 104.47.64.254

Document e-signed by JULIE SANCHEZ (jjsanchez@santafenm.gov)
Signature Date: 2024-11-08 - 4:58:25 PM GMT - Time Source: server- IP address: 63.232.20.2

Document emailed to HENRI HAMMOND-PAUL (hmhammondpaul@santafenm.gov) for signature
2024-11-08 - 4:58:27 PM GMT

Email viewed by HENRI HAMMOND-PAUL (hmhammondpaul@santafenm.gov)
2024-11-08 - 4:59:15 PM GMT- IP address: 104.47.65.254

Document e-signed by HENRI HAMMOND-PAUL (hmhammondpaul@santafenm.gov)
Signature Date: 2024-11-08 - 5:12:21 PM GMT - Time Source: server- IP address: 63.232.20.2

Agreement completed.
2024-11-08 - 5:12:21 PM GMT

Powered by Adobe Acrobat Sign

City of Santa Fe, New Mexico

200 Lincoln Avenue, P.O. Box 909, Santa Fe, N.M. 87504-0909
www.santafenm.gov

Alan Webber, Mayor

Councilors:
Signe I. Lindell, Mayor Pro Tem, District 1
Alma G. Castro, District 1
Michael J. Garcia, District 2
Carol Romero-Wirth, District 2
Lee Garcia, District 3
Pilar F.H. Faulkner, District 3
Jamie Cassutt, District 4
Amanda Chavez, District 4

DATE October 25, 2024

TO Governing Body

VIA John Blair, City Manager

FROM Regina Wheeler, Public Works Director
Regina Wheeler (Oct 29, 2024 16:58 MDT)
Emily Oster, Finance Director

ACTION
Request for Approval of Amendment #3 to the Intergovernmental Services Agreement With North Central New Mexico Economic Development District for Fiscal Agent Services Item #23-0688 to Add 2024 Capital Appropriations to the Agreement. (Regina Wheeler, Public Works Director; rawheeler@santafenm.gov)

BACKGROUND
At the December 13, 2023, regular meeting the Governing Body approved an Intergovernmental Services Agreement with North Central New Mexico Economic Development District (NCNMEDD) for Fiscal Agent Services for the 2021 capital appropriations due to requirement from New Mexico Department of Finance and Administration (DFA).

Amendment #1 added 2022 and 2023 capital appropriations to the scope based on DFA requirements, and lowered NCNMEDD fee from 3% to 1%.

Amendment #2 added 2023 “Junior Bill” capital projects to the fiscal agent agreement scope of work.

Amendment #3 adds 2024 Capital Appropriations to the scope of work so that the City may utilize these appropriations for community benefit. List of appropriation is shown on Exhibit A of the Amendment.

Note that the City pays the fiscal administrator a fee as funds are spent and pursued for reimbursement from the grant, not on the full grant amount. If and when the City no longer needs fiscal agent services, it may terminate the agreement with 30 days’ notice.

Attachments
Original Agreement
Amendment #1
Amendment #2
Amendment #3 for approval

INTERGOVERNMENTAL SERVICES AGREEMENT
BETWEEN CITY OF SANTA FE AND
NORTH CENTRAL NEW MEXICO ECONOMIC DEVELOPMENT DISTRICT
FOR FISCAL AGENT SERVICES

WHEREAS, the State of New Mexico appropriated funding for the purposes of improvements in the City of Santa Fe ("City") to the State of New Mexico, Department of Finance and Administration, Local Government Division, in the laws of Laws of 2021, Chapter 138, as detailed below ("Projects");

WHEREAS, NCNMEDD acknowledges that the appropriations for the Projects are intended for City;

WHEREAS, City, a municipality within Santa Fe County and the State of New Mexico, agrees to engage North Central New Mexico Economic Development District ("NCNMEDD") in providing fiscal agency services in relation to the Projects.

NOW, THEREFORE, the parties do mutually agree as follows:

This Agreement is entered into by and between City and NCNMEDD pursuant to the following purposes, conditions, and terms:

A. PURPOSE

The purpose of this Agreement is for NCNMEDD to provide fiscal agent services in connection with the Projects as specifically appropriated under New Mexico Legislative Appropriation Agreements identified as follows:

ApprID	Leg. Session	Appropriation Title	Year	Ch	Sect	Agency		Amount	Project Description
F2900	2021	SANTA FE PARKS UPGRADE	2021	138	29/341	341	Finance & Administration	1,000,000	to plan, design, construct, repair, improve and equip parks in Santa Fe in Santa Fe county;
F2902	2021	SANTA FE TIERRA CONTENTA TRAIL CONSTRUCT	2021	138	29/343	341	Finance & Administration	300,000	to plan, design and construct a trail in the Tierra Contenta subdivision in Santa Fe in Santa Fe county;
F2903	2021	SANTA FE MIDTOWN INFRA DES CONSTRUCT	2021	138	29/344	341	Finance & Administration	1,000,000	to plan, design, construct and improve infrastructure for the midtown Santa Fe property in Santa Fe in Santa Fe county;
F2899	2021	SANTA FE HOMEBOUND MEALS PROGRAM IMPROVE	2021	138	29/340	341	Finance & Administration	250,000	to plan, design, renovate, construct, improve and equip a facility for a meals program serving homebound and special needs individuals in Santa Fe in Santa Fe county;
F2901	2021	SANTA FE SOUTHSIDE TEEN CTR CONSTRUCT	2021	138	29/342	341	Finance & Administration	1,805,000	to plan, design, construct, furnish and equip a teen and resource center on the south side of Santa Fe in Santa Fe county;

Other projects may be included as agreed upon in writing and by amendment between the Parties.

B. SCOPE OF WORK

NCNMEDD's services in support of the above purpose shall be to provide fiscal agency services associated with the Projects, including:

1. NCNMEDD Fiscal Agency Services:

- Ensure that grant funds are expended in compliance with all applicable laws, regulations, and grant agreement and the transactions are appropriately accounted for in compliance with such laws, regulations, and grant agreement;
- Ensure safeguarding of grant funds and assets acquired with grant funds and proper accounting thereof in compliance with applicable laws, regulations, and grant agreement;
- Act as liaison between City and appropriate New Mexico state agencies as needed;
- Complete all required quarterly and financial reporting with information provided by City;
- Review and sign-off on project invoices to the appropriate State agency in a timely manner; and

- Work with the State on providing direct project reimbursements to City and act as a facilitator for such reimbursements as needed.

2. City Role and Responsibilities
   - City understands it remains ultimately responsible for executing and complying with all applicable laws, regulations, and grant agreement requirements such as flow down provisions, executing procurement responsibilities, and subcontractor management, as well as project, grant, and financial management.

C. TIMEFRAME

Work pursuant to this Agreement shall be effective no sooner than the date of last party signature below, and shall conclude upon notice by either party pursuant to paragraph I, but no later than one month following the reversion date of the appropriations, except as amended and mutually agreed upon in writing.

D. COMPENSATION:

NCNMEDD has agreed to provide the agreed upon services at three percent (3%) of the dollar amount(s) the City expends during the term of this Agreement towards the completion of the Projects, as those amounts were appropriated. Billing for services to City shall occur by NCNMEDD no more than on a monthly basis. The City will not use funds from this grant to make such payments.

E. RECORDS AND RECOVERY:

NCNMEDD shall maintain appropriate records of services rendered during the Agreement term and retain them for a period of three (3) years after the grant has been closed.

F. ACCESS TO INFORMATION

City and its contractors and subcontractors shall provide information, as needed, for purposes and work described in this Agreement. NCNMEDD will be included and copied on all invoices and reports, prior to City's submission to the appropriate State agency.

G. OWNERSHIP OF PROJECTS

All documents, capital improvements, and project assets produced pursuant to this Agreement shall be the property of City which shall assume full administrative responsibility for the life of the project; or the State grant agreement required period, whichever comes first.

H. LIMITATION OF LIABILITY

This Agreement shall not create a general liability of the constituent members of NCNMEDD.

City shall hold NCNMEDD harmless with respect to any damages, expenses, or claims arising or in connection with any negligent acts, errors, or omissions performed by City under this Agreement. This term shall not limit NCNMEDD liability with respect to NCNMEDD's negligence or willful misconduct.

I. MODIFICATION AND TERMINATION

Any modifications or amendments to this Agreement shall be in writing, and when signed by both parties shall be made part of the Agreement. This Agreement may be terminated by either party upon thirty (30) days written notice to the other.

J. CERTIFICATION

City shall comply with the requirements of all applicable laws, rules, and regulations, and shall assume full responsibility for payment of federal, state, and local taxes and contributions imposed or required under Social Security, Workers Compensation and income tax laws. City is required to follow all State procurement regulations and it is City obligation and responsibility to follow all State requirements as certified in the project bond questionnaire process and as included in associated State grant agreements, including reporting and drawdown requirements, such documents to be filed for each project in conjunction with this agreement.

K. ADEQUATE APPROPRIATIONS

Performance of this agreement is contingent upon sufficient appropriations and authorization being made for the performance of this Agreement. If sufficient appropriations and authorization are not made, this Agreement shall terminate immediately upon written notice being given by NCNMEDD to City. NCNMEDD's decision as to whether sufficient appropriations are available shall be accepted by City and shall be final. If NCNMEDD proposes an amendment to the Agreement to unilaterally reduce its Fiscal Agency Services, City shall have the option to terminate the Agreement or agree to negotiate for reduced Fiscal Agency Services: within thirty (30) days of receipt of the proposed amendment.

L. PENALTIES

The Procurement Code, NMSA 1978, Sections 13-1-28 to -199, imposes civil and criminal penalties for its violation. In addition, the New Mexico criminal statutes impose felony penalties for illegal bribes, gratuities, and kickbacks.

M. NOTICES

Any notice required to be given to either party by this Agreement shall be in writing

and shall be delivered in person, by courier service or by U.S. mail, either first class or certified, return receipt requested, postage prepaid as follows:

To: City
City Manager John Blair
City of Santa Fe
200 Lincoln
Santa Fe, New Mexico, 87501j

To NCNMEDD:
Monica Abeita Executive Director NCNMEDD
3900 Paseo del Sol
Santa Fe, NM 87507

N. DISPUTE RESOLUTION

The parties to this agreement agree that in the event of a dispute that may arise hereunder, which dispute cannot be reasonably resolve, they will submit to mediation by a neutral mediator, the cost of which will be borne equally by both parties. Disputes that cannot be resolved by mediation shall be subject to the laws of the State of New Mexico under the jurisdiction of the First Judicial District Court.

O. BREACH AND DEFAULT

If either party commits a breach or default in the performance or observance of any of its obligations under this agreement and such breach or default continues and is not corrected within thirty (30) days of written notification of such breach or default by either party to the other, the non-breaching or non-defaulting party shall have the right to terminate this agreement by giving notice to the breaching or defaulting party.

P. ASSIGNMENT

No portion of this agreement may be assigned to another party without the express written consent of the City and NCNMEDD.

APPROVED THIS 19th DAY OF December, 2023, BY CITY.

NORTH CENTRAL NEW MEXICO ECONOMIC DEVELOPMENT DISTRICT:

BY: Monica Abeita 12/8/23

Monica Abeita, Executive Director Date

IN WITNESS WHEREOF, the City of Santa Fe has agreed to this Waiver as of the date of the signature by the required approval authorities below.

CITY OF SANTA FE:

ALAN WEBBER, MAYOR

DATE: Dec 19, 2023

ATTEST:

Geralyn Cardenas (Dec 19, 2023 14:06 MST)

GERALYN CARDENAS, INTERIM CITY CLERK XIV

GB MTG 12/13/23

CITY ATTORNEY'S OFFICE:

Erin McSherry

Erin McSherry (Dec 8, 2023 13:36 MST)

ERIN MCSHERRY, CITY ATTORNEY

Munis Contract#_____
Original Contract Item#___23-0688____
SWPA/GSA/Coop/RFP/ITB #: _____

CITY OF SANTA FE
AMENDMENT No. 1 TO
Intergovernmental Service Agreement
ITEM#23-0688

This AMENDMENT No 1 (the "Amendment") amends the INTERGOVERNMENTAL SERVICES AGREEMENT BETWEEN CITY OF SANTA FE AND NORTH CENTRAL NEW MEXICO ECONOMIC DEVELOPMENT DISTRICT FOR FISCAL AGENT SERVICES, dated December 19, 2023 (the "Agreement"), between the City of Santa Fe (the "City") and the North Central New Mexico Economic Development District (NCNMEDD). The date of this Amendment shall be the date when it is executed by the City and the NCNMEDD whichever occurs last.

RECITALS:

A. Under the terms of the Agreement, the NCNMEDD has agreed to provide fiscal agent services in connection with the Capital Projects specified under the Agreement.

B. Pursuant to Article I of the Agreement, and for good and valuable consideration, the receipt and sufficiency of which are acknowledged by the parties, the City and the NCNMEDD agree as follows:

1. PURPOSE:

Article A of the Agreement is amended to add an additional twenty-two (22) Capital appropriations as seen on Exhibit A.

2. COMPENSATION:

Article D, of the Agreement is amended in its entirety as follows:

NCNMEDD has agreed to provide the agreed upon services at one percent (1%) of the dollar amount(s) the City expends during the term of this Agreement towards the completion of the Projects, as those amounts were appropriated. Billing for services to City shall occur by NCNMEDD no more than on a monthly basis. The City will not use funds from these Capital appropriations to make such payments.

3. CONTRACT IN FULL FORCE.

Except as specifically provided in this Amendment, the Agreement remains and shall remain in full force and effect, in accordance with its terms.

IN WITNESS WHEREOF, the parties have executed this Amendment No.1 to the Agreement as of the dates set forth below.

CITY OF SANTA FE:

Alan Webber (Mar 14, 2024 10:01 MDT)

ALAN WEBBER, MAYOR

DATE: Mar 14, 2024

NCNMEDD

Monica Abeita

MONICA ABEITA
EXECUTIVE DIRECTOR

Executive Director
TITLE

DATE: Feb. 20, 2024

ATTEST:

Geralyn Cardenas (Mar 14, 2024 11:32 MDT)

GERALYN CARDENAS, INTERIM CITY CLERK

GB MTG 03/13/2024 XIV

CITY ATTORNEY'S OFFICE:

Marcos Martinez
Marcos Martinez (Feb 16, 2024 13:08 MST)

SENIOR ASSISTANT CITY ATTORNEY

EXHIBIT A

Approp ID	Leg. Session	Appropriation Title	Approp. Amount	Reversion Date	Agency	Bond Series
22-G2419	2022	Jemez Road Construction	$ 400,000	6/30/2026	NMED	STB23SC
22-G3010	2022	SF Fire Fleet Equip / Upgrade Improv	$ 120,000	6/30/2026	DFA	STB23SC
22-G3012	2022	Harrison Rd Improve Construct	$ 100,000	6/30/2026	DFA	STB23SC
22-G3016	2022	Homebound Meals Program Improve	$ 200,000	6/30/2026	DFA	STB23SC
22-G3017	2022	Midtown Property Infra Improve	$ 1,100,000	6/30/2026	DFA	STB23SC
22-G3018	2022	SWAN Park Phase 2 Construct	$ 380,000	6/30/2026	DFA	STB23SC
22-G3019	2022	Tierra Contenta Trail Improve	$ 300,000	6/30/2026	DFA	STB23SC
22-G3165	2022	Median Beautify Phase 1 Design	$ 1,170,000	6/30/2026	DOT	STB23SC
22-G3169	2022	Governor Miles Rd. Construct	$ 300,000	6/30/2026	DOT	STB23SC
22-G3170	2022	Pacheco Street Improve	$ 150,000	6/30/2026	DOT	STB23SC
G22-5353	2022	Mary Esther Gonzales Senior Ctr- Equip	$ 235,630	6/30/2026	ALTSD	STB22SC- GO Bonds
G22-5354	2022	Pasatiemo Senior Ctr- Equip	$ 65,805	6/30/2026	ALTSD	STB22SC- GO Bonds
23-H3200	2023	Santa Fe Building Upgrade	$ 210,000	6/30/2027	DFA	General Fund
23-H3201	2023	SF Fire Station #2 Construction	$ 3,995,000	6/30/2027	DFA	General Fund
23-H3202	2023	SF Homebound Meals Faculty Ren	$ 200,000	6/30/2027	DFA	General Fund
23-H3203	2023	SF Midtown Infa. Improvement	$ 4,900,000	6/30/2027	DFA	General Fund
23-H3204	2023	SF Muni Rec Sports Cmplx Field Const.	$ 50,000	6/30/2027	DFA	General Fund
23-H3205	2023	SF Pickleball Cmplx Ft. Marcy Constr.	$ 650,000	6/30/2027	DFA	General Fund
23-H3206	2023	SF SWAN Park Phase 2 Improvement	$ 2,400,000	6/30/2027	DFA	General Fund
23-H3207	2023	SF Water History Park Improvement	$ 350,000	6/30/2027	DFA	General Fund
23-H3359	2023	Governor Miles Road Improvement	$ 210,000	6/30/2027	DOT	General Fund
23-H3360	2023	Pacheco Street Improvement	$ 350,000	6/30/2027	DOT	General Fund

INTERGOVERNMENTAL SERVICES AGREEMENT
BETWEEN CITY OF SANTA FE AND
NORTH CENTRAL NEW MEXICO ECONOMIC DEVELOPMENT DISTRICT
FOR FISCAL AGENT SERVICES

WHEREAS, the State of New Mexico appropriated funding for the purposes of improvements in the City of Santa Fe ("City") to the State of New Mexico, Department of Finance and Administration, Local Government Division, in the laws of Laws of 2021, Chapter 138, as detailed below ("Projects");

WHEREAS, NCNMEDD acknowledges that the appropriations for the Projects are intended for City;

WHEREAS, City, a municipality within Santa Fe County and the State of New Mexico, agrees to engage North Central New Mexico Economic Development District ("NCNMEDD") in providing fiscal agency services in relation to the Projects.

NOW, THEREFORE, the parties do mutually agree as follows:

This Agreement is entered into by and between City and NCNMEDD pursuant to the following purposes, conditions, and terms:

A. PURPOSE

The purpose of this Agreement is for NCNMEDD to provide fiscal agent services in connection with the Projects as specifically appropriated under New Mexico Legislative Appropriation Agreements identified as follows:

ApprID	Leg. Session	Appropriation Title	Year	Ch	Sect	Agency		Amount	Project Description
F2900	2021	SANTA FE PARKS UPGRADE	2021	138	29/341	341	Finance & Administration	1,000,000	to plan, design, construct, repair, improve and equip parks in Santa Fe in Santa Fe county;
F2902	2021	SANTA FE TIERRA CONTENTA TRAIL CONSTRUCT	2021	138	29/343	341	Finance & Administration	300,000	to plan, design and construct a trail in the Tierra Contenta subdivision in Santa Fe in Santa Fe county;
F2903	2021	SANTA FE MIDTOWN INFRA DES CONSTRUCT	2021	138	29/344	341	Finance & Administration	1,000,000	to plan, design, construct and improve infrastructure for the midtown Santa Fe property in Santa Fe in Santa Fe county;
F2899	2021	SANTA FE HOMEBOUND MEALS PROGRAM IMPROVE	2021	138	29/340	341	Finance & Administration	250,000	to plan, design, renovate, construct, improve and equip a facility for a meals program serving homebound and special needs individuals in Santa Fe in Santa Fe county;
F2901	2021	SANTA FE SOUTHSIDE TEEN CTR CONSTRUCT	2021	138	29/342	341	Finance & Administration	1,805,000	to plan, design, construct, furnish and equip a teen and resource center on the south side of Santa Fe in Santa Fe county;

Other projects may be included as agreed upon in writing and by amendment between the Parties.

B. SCOPE OF WORK

NCNMEDD's services in support of the above purpose shall be to provide fiscal agency services associated with the Projects, including:

1. NCNMEDD Fiscal Agency Services:

- Ensure that grant funds are expended in compliance with all applicable laws, regulations, and grant agreement and the transactions are appropriately accounted for in compliance with such laws, regulations, and grant agreement;
- Ensure safeguarding of grant funds and assets acquired with grant funds and proper accounting thereof in compliance with applicable laws, regulations, and grant agreement;
- Act as liaison between City and appropriate New Mexico state agencies as needed;
- Complete all required quarterly and financial reporting with information provided by City;
- Review and sign-off on project invoices to the appropriate State agency in a timely manner; and

- Work with the State on providing direct project reimbursements to City and act as a facilitator for such reimbursements as needed.

2. City Role and Responsibilities
   - City understands it remains ultimately responsible for executing and complying with all applicable laws, regulations, and grant agreement requirements such as flow down provisions, executing procurement responsibilities, and subcontractor management, as well as project, grant, and financial management.

C. TIMEFRAME

Work pursuant to this Agreement shall be effective no sooner than the date of last party signature below, and shall conclude upon notice by either party pursuant to paragraph I, but no later than one month following the reversion date of the appropriations, except as amended and mutually agreed upon in writing.

D. COMPENSATION:

NCNMEDD has agreed to provide the agreed upon services at three percent (3%) of the dollar amount(s) the City expends during the term of this Agreement towards the completion of the Projects, as those amounts were appropriated. Billing for services to City shall occur by NCNMEDD no more than on a monthly basis. The City will not use funds from this grant to make such payments.

E. RECORDS AND RECOVERY:

NCNMEDD shall maintain appropriate records of services rendered during the Agreement term and retain them for a period of three (3) years after the grant has been closed.

F. ACCESS TO INFORMATION

City and its contractors and subcontractors shall provide information, as needed, for purposes and work described in this Agreement. NCNMEDD will be included and copied on all invoices and reports, prior to City's submission to the appropriate State agency.

G. OWNERSHIP OF PROJECTS

All documents, capital improvements, and project assets produced pursuant to this Agreement shall be the property of City which shall assume full administrative responsibility for the life of the project; or the State grant agreement required period, whichever comes first.

H. LIMITATION OF LIABILITY

This Agreement shall not create a general liability of the constituent members of NCNMEDD.

City shall hold NCNMEDD harmless with respect to any damages, expenses, or claims arising or in connection with any negligent acts, errors, or omissions performed by City under this Agreement. This term shall not limit NCNMEDD liability with respect to NCNMEDD's negligence or willful misconduct.

I. MODIFICATION AND TERMINATION

Any modifications or amendments to this Agreement shall be in writing, and when signed by both parties shall be made part of the Agreement. This Agreement may be terminated by either party upon thirty (30) days written notice to the other.

J. CERTIFICATION

City shall comply with the requirements of all applicable laws, rules, and regulations, and shall assume full responsibility for payment of federal, state, and local taxes and contributions imposed or required under Social Security, Workers Compensation and income tax laws. City is required to follow all State procurement regulations and it is City obligation and responsibility to follow all State requirements as certified in the project bond questionnaire process and as included in associated State grant agreements, including reporting and drawdown requirements, such documents to be filed for each project in conjunction with this agreement.

K. ADEQUATE APPROPRIATIONS

Performance of this agreement is contingent upon sufficient appropriations and authorization being made for the performance of this Agreement. If sufficient appropriations and authorization are not made, this Agreement shall terminate immediately upon written notice being given by NCNMEDD to City. NCNMEDD's decision as to whether sufficient appropriations are available shall be accepted by City and shall be final. If NCNMEDD proposes an amendment to the Agreement to unilaterally reduce its Fiscal Agency Services, City shall have the option to terminate the Agreement or agree to negotiate for reduced Fiscal Agency Services: within thirty (30) days of receipt of the proposed amendment.

L. PENALTIES

The Procurement Code, NMSA 1978, Sections 13-1-28 to -199, imposes civil and criminal penalties for its violation. In addition, the New Mexico criminal statutes impose felony penalties for illegal bribes, gratuities, and kickbacks.

M. NOTICES

Any notice required to be given to either party by this Agreement shall be in writing

and shall be delivered in person, by courier service or by U.S. mail, either first class or certified, return receipt requested, postage prepaid as follows:

To: City
City Manager John Blair
City of Santa Fe
200 Lincoln
Santa Fe, New Mexico, 87501j

To NCNMEDD:
Monica Abeita Executive Director NCNMEDD
3900 Paseo del Sol
Santa Fe, NM 87507

N. DISPUTE RESOLUTION

The parties to this agreement agree that in the event of a dispute that may arise hereunder, which dispute cannot be reasonably resolve, they will submit to mediation by a neutral mediator, the cost of which will be borne equally by both parties. Disputes that cannot be resolved by mediation shall be subject to the laws of the State of New Mexico under the jurisdiction of the First Judicial District Court.

O. BREACH AND DEFAULT

If either party commits a breach or default in the performance or observance of any of its obligations under this agreement and such breach or default continues and is not corrected within thirty (30) days of written notification of such breach or default by either party to the other, the non-breaching or non-defaulting party shall have the right to terminate this agreement by giving notice to the breaching or defaulting party.

P. ASSIGNMENT

No portion of this agreement may be assigned to another party without the express written consent of the City and NCNMEDD.

APPROVED THIS 19th DAY OF December, 2023, BY CITY.

NORTH CENTRAL NEW MEXICO ECONOMIC DEVELOPMENT DISTRICT:

BY: Monica Abeita 12/8/23

Monica Abeita, Executive Director Date

IN WITNESS WHEREOF, the City of Santa Fe has agreed to this Waiver as of the date of the signature by the required approval authorities below.

CITY OF SANTA FE:

ALAN WEBBER, MAYOR

DATE: Dec 19, 2023

ATTEST:

Geralyn Cardenas (Dec 19, 2023 14:06 MST)

GERALYN CARDENAS, INTERIM CITY CLERK XIV

GB MTG 12/13/23

CITY ATTORNEY'S OFFICE:

Erin McSherry

Erin McSherry (Dec 8, 2023 13:36 MST)

ERIN MCSHERRY, CITY ATTORNEY

Emily K. Oster

Finance Director

Munis Contract#_____
Original Contract Item#___23-0688_____
SWPA/GSA/Coop/RFP/ITB #: _____

CITY OF SANTA FE
AMENDMENT No. 2 TO
Intergovernmental Service Agreement
ITEM#23-0688

This AMENDMENT No 2 (the "Amendment") amends the INTERGOVERNMENTAL SERVICES AGREEMENT BETWEEN CITY OF SANTA FE AND NORTH CENTRAL NEW MEXICO ECONOMIC DEVELOPMENT DISTRICT FOR FISCAL AGENT SERVICES, dated December 19, 2023 (the "Agreement"), between the City of Santa Fe (the "City") and the North Central New Mexico Economic Development District (NCNMEDD). The date of this Amendment shall be the date when it is executed by the City and the NCNMEDD whichever occurs last.

RECITALS:

A. Under the terms of the Agreement, the NCNMEDD has agreed to provide fiscal agent services in connection with the Capital Projects specified under the Agreement.

B. Pursuant to Article I of the Agreement, and for good and valuable consideration, the receipt and sufficiency of which are acknowledged by the parties, the City and the NCNMEDD agree as follows:

1. PURPOSE:

Article A of the Agreement is amended to add an additional three (3) capital appropriations as seen on Exhibit B.

2. CONTRACT IN FULL FORCE.

Except as specifically provided in this Amendment, the Agreement remains and shall remain in full force and effect, in accordance with its terms.

IN WITNESS WHEREOF, the parties have executed this Amendment No.2 to the Agreement as of the dates set forth below.

CITY OF SANTA FE:

Alan Webber (Apr 11, 2024 21:17 MDT)

ALAN WEBBER, MAYOR

DATE: Apr 11, 2024

CONTRACTOR:
NCNMEDD

Monica Abeita

MONICA ABEITA
EXECUTIVE DIRECTOR

Executive Director
TITLE

April 2, 2024

DATE:

ATTEST:

GERALYN CARDENAS (Apr 12, 2024 09:03 MDT)

GERALYN CARDENAS, INTERIM CITY CLERK

GB MTG 04/10/2024 XIV

CITY ATTORNEY'S OFFICE:

Marcos Martinez
Marcos Martinez (Apr 4, 2024 09:38 MDT)

SENIOR ASSISTANT CITY ATTORNEY

APPROVED FOR FINANCES:

Emily K. Oster

FINANCE DIRECTOR

EXHIBIT B

23-ZH9298	for Santa Fe to purchase security cameras and security systems at municipal parks	$	95,000.00
23-ZH9300	to purchase equipment and to provide arson investigation training to fire department three in Santa Fe	$	125,000.00
23-ZH9401	for sanitization and deep cleaning of all municipal swimming pools in Santa Fe	$	75,000.00

Original Contract Item# 23-0688
SWPA/GSA/Coop/RFP/ITB #: N/A

CITY OF SANTA FE
AMENDMENT No. 3 TO
Intergovernmental Service Agreement
ITEM#23-0688

This AMENDMENT No 3 (the "Amendment") amends the INTERGOVERNMENTAL SERVICES AGREEMENT BETWEEN CITY OF SANTA FE AND NORTH CENTRAL NEW MEXICO ECONOMIC DEVELOPMENT DISTRICT FOR FISCAL AGENT SERVICES, dated December 19, 2023 (the "Agreement"), between the City of Santa Fe (the "City") and the North Central New Mexico Economic Development District (NCNMEDD). The date of this Amendment shall be the date when it is executed by the City and the NCNMEDD whichever occurs last.

RECITALS:

A. Under the terms of the Agreement, the NCNMEDD has agreed to provide fiscal agent services in connection with the Capital Projects specified under the Agreement.

B. Pursuant to Article I of the Agreement, and for good and valuable consideration, the receipt and sufficiency of which are acknowledged by the parties, the City and the NCNMEDD agree as follows:

1. PURPOSE:

Article A of the Agreement is amended to add twenty-two (22) capital appropriations as seen on Exhibit A.

2. CONTRACT IN FULL FORCE.

Except as specifically provided in this Amendment, the Agreement remains and shall remain in full force and effect, in accordance with its terms.

IN WITNESS WHEREOF, the parties have executed this Amendment No.3 to the Agreement as of the dates set forth below.

CITY OF SANTA FE:

_____
ALAN WEBBER, MAYOR

DATE:_____

CONTRACTOR:
NCNMEDD

Monica Abeita
Monica Abeita (Oct 11, 2024 13:22 MDT)

MONICA ABEITA
EXECUTIVE DIRECTOR

DATE: Oct 11, 2024

ATTEST:

_____
GERALYN CARDENAS, INTERIM CITY CLERK

CITY ATTORNEY'S OFFICE:

Marcos Martinez
Marcos Martinez (Oct 11, 2024 13:26 MDT)

SENIOR ASSISTANT CITY ATTORNEY

APPROVED FOR FINANCES:

Emily K. Oster

FINANCE DIRECTOR

EXHIBIT A

Approp ID	Leg. Session	Appropriation Title	Approp. Amount	Reversion Date	Funding Agency	Funding Source
I2455	2024	Paseo Real Wastewater Facility	$1,600,000	30-Jun-28	NMED	General Fund
I2457	2024	Jemez Rd Sewer	$210,000	30-Jun-28	NMED	General Fund
I2458	2024	Vereda de Velencia WWater	$160,000	30-Jun-2028	NMED	General Fund
I3023	2024	Police Dept. Equipment Purchase	$250,000	30-Jun-2026	DFA	General Fund
I3134	2024	Fire Stn 2 Construct	$250,000	30-Jun-2028	DFA	General Fund
I3136	2024	Soccer Valley MRC Construct	$3,425,000	30-Jun-2028	DFA	General Fund
I3138	2024	Los Prados Park	$438,000	30-Jun-2028	DFA	General Fund
I3141	2024	Fire SCBA Equip Purchase	$250,000	30-Jun-2026	DFA	General Fund
I3142	2024	Ft Marcy Park Ren	$5,000,000	30-Jun-2028	DFA	General Fund
I3143	2024	Permanent and Transitional Housing	$400,000	30-Jun-2028	DFA	General Fund
I3144	2024	Railyard Bldg. Upgrade	$100,000	30-Jun-2028	DFA	General Fund
I3145	2024	Railyard Multipurpose Bldg	$175,000	30-Jun-2028	DFA	General Fund
I3146	2024	Regional Airport Phase 2 Improve	$2,000,000	30-Jun-2028	DFA	General Fund
I3147	2024	River Park Pedestrian Bridge	$240,000	30-Jun-2028	DFA	General Fund
I3318	2024	NM599-Airport Access Road	$4,500,000	30-Jun-2028	NMDOT	General Fund
I3319	2024	Rufina St. & Lopez Lane Intersection	$50,000	30-Jun-2028	NMDOT	General Fund
I3320	2024	Paseo del Sol Extension	$50,000	30-Jun-2028	NMDOT	General Fund
I3321	2024	St. Michael's Rail Trail Underpass	$100,000	30-Jun-2028	NMDOT	General Fund
I4219	2024	El Museo Improvements	$126,950	30-Jun-2026	DFA	Severance Tax Bond
I4220	2024	Homebound Meals	$100,000	30-Jun-2028	DFA	General Fund
I4221	2024	Municipal Court Renovations	$29,843	30-Jun-2028	DFA	General Fund
I4222	2024	Supportive Housing	$844,470	30-Jun-2026	DFA	General Fund

CITY OF SANTA FE PROCUREMENT CHECKLIST

Contractor Name: North Central New Mexico Economic Development District

Procurement/contract Title: Fiscal Agent Services

Procurement Method/Vehicle: ☐Sole Source ☐State Price Agreement/Existing ☐ Cooperative ☐Request For Proposals(RFP) ☐Invitation To Bid (ITB) ☐Exempt: 13-1-98 A

☐Small Purchase (Contract Under $60,000) ☐Other: _____

Requesting Department: Finance Department Staff Name: Emily K. Oster

Procurement Requirements:

Procurement files shall be maintained for all purchases and contracts, regardless of the method of procurement. The procurement files shall contain the basis on which the awards are made, all submitted bids/proposals, all evaluation materials (bid tabs or Evaluation Committee Reports), scoresheets, quotations, and all other documentation related to or prepared in conjunction with evaluations, negotiations, and the award processes. The procurements shall contain written determinations from the Requesting Departments, signed by the Chief Procurement Officers (this document), setting forth the reasoning for the contract award decisions before submitting them to the Committees.

REQUIRED DOCUMENTS FOR APPROVAL BY PURCHASING (CPD)

YES	N/A		YES	N/A	
☒	☐	**Written Determination (srvs)**	☐	☒	**Quote(s) (3 Valid & Current for Over 20k)**
☐	☒	**RFP - Confidential info to be provided to GB by CPD Buyer**	☐	☒	**BAR**
☐	☒	**ITB (include bid tab)**	☐	☒	**FIR**
☒	☐	**Other: Government to Government**	☐	☒	**Certificate of Insurance (srvs)**
☐	☒	**Cooperative Agreements and GSAs and Statewide Price Agreements (include the cover page to show valid date, s page, and items to be purchased)**			
☐	☒	**Horizon Declination or Screenshot of horizonsofnewmexico.org/services.html (srvs)**			
☒	☐	**Summary of Contract (only on contracts)**			
☐	☒	**Current Santa Fe Business Registration (or Exemption if no tax)**			
☒	☐	**Executed Contract or Price Agreement (legal and contractor must sign before purchasing approves)**			
☒	☐	**Chief Procurement Officer (or designee) Approval for Exempt from Procurement (use memo on our site)**			
☐	☒	**Evaluation Committee Report (RFPs only)**			
☐	☒	**Signed Sole Source Determination, Vendor Written Quote, SS Letter from Contractors, and 30 Days Email**			
☐	☒	**>20k = Memo addressed to City Manager (Under 150K) Committees/City Council (Over 150K)**			

Emily K. Oster		Finance Director	4/2/24
Department Point of Contact		Title	Date
Emily K. Oster			4/2/24
Department Director			Date
			Apr 5, 2024
Chief Procurement Officer			Date
N/A			
ITT Representative		Title	Date

City of Santa Fe

Summary of Contract, Agreement, Amendment & Lease

All applicable fields to be completed by department (complete 1.b only if you are processing an amendment):

1.a Munis Contract: _____ Procurement # (RFP/ITB# If any): _____

Contractor: North Central New Mexico Economic Development District

Procurement Method/Vehicle: *Small Purchase* ☐ *RFP* ☐ *ITB* ☐ *Sole Source* ☐ *GSA* ☐ *Cooperative* ☐ Exempt ☑ SWPA/Existing ☐

Description/Title: Fiscal Agent Services for the City of Santa Fe

Contract: ○ Agreement: ○ Lease/Rent: ○ Amendment: ◉

Term Start Date: upon approval Term End Date: one month after reversion date Total Contract Amount: 1% of dollar amount expended

☒ Approved by Council *(If over the City Manager's approval threshold, you must go through GB)* 12/13/23

Contract / Lease:

1.b Amendment #: Two to the Original Contract/Lease # 23-0688

Increase/(Decrease) Amount $: 1% of dollar amount expended, approx. $3,200

Extend Expiration Date to: _____

☐ Approved by Council *(If the original went through GB, all amendments must go through GB regardless of the amendment reason)* Date: _____

Amendment is for: Adds services for three 2023 Junior Bill appropriations.

2. HISTORY of Contract, Amendments & Lease / Rent - Please Elaborate (option: attach spreadsheet if multiple amendments)

Original agreement item 23-0688 approved by GB on 12/13/23
Amendment one approved by GB on 3/13/24

3. Procurement History: Exempt NMSA 1978, 13-1-98A

_____ Apr 5, 2024

Purchasing Officer Review: Date:

Comment & Exceptions: _____

4. Funding Source: General Fund 100 **Org / Object:** 1001501.510300

Andy Hopkins Apr 5, 2024

Budget Officer Approval: Date:

Comment & Exceptions: _____

5. Grant History (if applicable): _____

Grants Administrator Approval: _____ **Date** _____

Staff Contact who Completed This Form: _____ Phone #: _____

To be recorded by City Clerk:
Clerk # _____ Email: _____
Date of Execution: _____

ITT Representative (attesting that all information is reviewed) Title Date

DUTTON-LEYDA, TRAVIS K.

From: DUTTON-LEYDA, TRAVIS K.
Sent: Wednesday, March 6, 2024 9:21 AM
To: TAPIA, ERMINIA M.
Subject: RE: Amendment to Fiscal Agent Services agreement for NCNMEDD- for meetings next week 2/26 and 2/28

Government to government agreements are exempt per NMSA 1978, Section 13-1-98 A.

Thank you.

Regards,

Travis Dutton-Leyda
Chief Procurement Officer
City of Santa Fe
200 Lincoln Avenue
Santa Fe, NM 87501
505-629-8351
tkduttonleyda@santafenm.gov

https://santafenm.gov/finance-2/purchasing-1

Vision without action is merely a dream.
Action without vision passes the time.
Vision with action can change the world. ~ Joel A. Barker

Portion of Scope:
WHEREAS, the State of New Mexico appropriated funding for the purposes of improvements in the City of Santa Fe ("City") to the State of New Mexico, Department of Finance and Administration, Local Government Division, in the laws of Laws of 2021, Chapter 138, as detailed below ("Projects");

The purpose of this Agreement is for NCNMEDD to provide fiscal agent services in connection with the Projects as specifically appropriated under New Mexico Legislative Appropriation Agreements identified as follows:

NCNMEDD's services in support of the above purpose shall be to provide fiscal agency services associated with the Projects, including:

NCNMEDD Fiscal Agency Services:
Ensure that grant funds are expended in compliance with all applicable laws, regulations, and grant agreement and the transactions are

City of Santa Fe, New Mexico

memo

Date: **Wednesday, March 06, 2024**

To: **Travis Dutton-Leyda, Chief Procurement Officer**

From: **Erminia M. Tapia, Administrative Manager**

Subject: **Exemption Determination Request, NCNMEDD Fiscal Agent Services**

The Finance Department respectfully request exempt determination to be approved by the City's Chief Procurement Officer (CPO), Travis Dutton-Leyda, for the following scope of work (SOW):

NCNMEDD's services in support of the above purpose shall be to provide fiscal agency services associated with the Projects, including:

1. NCNMEDD Fiscal Agency Services:
Ensure that grant funds are expended in compliance with all applicable laws, regulations, and grant agreement and the transactions are appropriately accounted for in compliance with such laws, regulations, and grant agreement;

- Ensure safeguarding of grant funds and assets acquired with grant funds and proper accounting thereof in compliance with applicable laws, regulations, and grant agreement;

- Act as liaison between City and appropriate New Mexico state agencies as needed;

- Complete all required quarterly and financial reporting with information provided by City;

- Review and sign-off on project invoices to the appropriate State agency in a timely manner; and

- Work with the State on providing direct project reimbursements to City and act as a facilitator for such reimbursements as needed.

2. City Role and Responsibilities

City understands it remains ultimately responsible for executing and complying with all applicable laws, regulations, and grant agreement requirements such as flow down provisions, executing procurement responsibilities, and subcontractor management, as well as project, grant, and financial management.

City of Santa Fe follows the New Mexico State Procurement Code NMSA 1978, Sections 13-1-28 through 13-1-199 & City of Santa Fe Procurement Manual (CoSFPM).

NMSA 1978, Section 13-1-98 A / CoSFPM, Item VI. 1

Procurement of items of tangible personal property or services by the City from a state agency, a local public body or external procurement unit except as otherwise provided in NMSA 1978, §13-1-135 to §13- 1-137;

Amount: $60,000.00

Term: 06/30/2025

Approved Exemption

Travis Dutton-Leyda, Chief Procurement Officer

CITY OF SANTA FE

Date: November 6, 2024

To: Governing Body and Finance Committee

From: Larry Worstell, ITT Infrastructure Services Manager

Via: Eric Candelaria, ITT Department Director EC

Subject: Circuits Data Center

Vendor Name: Century Link Business/Lumen Technologies

Munis Vendor Number: 3590

ITEM AND ISSUE:

ITT Department respectfully requests your review and approval of a General Services Agreement in the total amount of $343,760 not to exceed for City data networks and Internet services fiber network between our Primary and Disaster Recovery data centers for a term of 36 Months with Century Link Business/Lumen Technologies.

CONTRACT NUMBER:

The FY25 Munis contract number is 3250299

BACKGROUND AND SUMMARY:

The ITT Department is requesting approval of the attached agreement called the Order Addendum. This addendum provides for our City data networks and Internet services fiber network between our Primary and Disaster Recovery data centers.

The Order Addendum is for the following circuits/services:

1) Fiber Circuits for the City's existing ANS Service to install at Big Byte Data Center.
2) Fiber Circuits for the City's existing SIP/Voice Complete Service to move them to Big Byte Data Center.
3) Professional Fiber Circuit Services
4) Fiber Wave circuit for Big Byte Data Center.

Lumen has bundled all 4 Circuit services under one addendum as the circuits are all terminated at the Big Byte Data Center.

The total costs of all agreements in the paperwork.

The costs are:

Monthly charges	$9,040.00
36-month contract on all circuits	$325,440.00
One time cost of Services	$18,320.00

Prior Approvals and Supporting Information:

PROCUREMENT METHOD:

The procurement method used was NMSA 1978, Section 13-1-129, Statewide Price Agreement

Chief Procurement Officer (CPO) / Designee: _____ **Date:** 11/12/2024
CPO Comment/Exceptions: NMSA 1978, Section 13-1-129 GSA - Not Statewide Price Agreement

FUNDING SOURCE:

Fund Name/Number: Other Department Services/620

Munis Org Name/Number: ITT Infrastructure Services/6203650

Munis Object Name/Number: Communication Services/514100

Budget Officer / Designee: _____ **Date:** 11/12/2024
Budget Officer Comment/Exceptions: _____

ASSOCIATED APPROVALS:

Does this purchase require any of the following associated approvals: ☐ Yes | ☐ No
(ITT, Vehicles/Fleet, Facilities, Asset, Grant Review)

IT Components included? ■ Yes | ☐ No
Approval: _____ **Title:** Director. IT **Date:** _____
Comment/Exceptions: _____

Vehicles included? ☐ Yes | ■ No
Approval: _____ **Title:** _____ **Date:** _____
Comment/Exceptions: _____

Construction, Facilities, Furniture, Fixtures, Equipment included? ☐ Yes | ☑ No
Approval: _____ **Title:** _____ **Date:** _____
Comment/Exceptions: _____

Capital Asset* or Project ☐ Yes | ☐ No**
Project Ledger #: _____
(*will this procurement result in a tangible item that costs more than $5,000?)
(**Capital Projects are new and improvement projects that are going to cost $10,000 or more)
Approval: _____ **Title:** _____ **Date:** _____
Comment/Exceptions: _____

Is this a Grant Funded Purchase? ☐ Yes | ☑ No
Approval: _____ **Title:** _____ **Date:** _____
Comment/Exceptions: _____

ATTACHMENTS:

Procurement Document: SWPA/Existing Contract

Vendor's Quote

Goods/General Services Contract

Horizons declination
CPO Service Determination Email
Department approval email from ITT, Fleet, or Facilities [pick one or more or delete]
Certificate of Liability Insurance (COI) (add City as an additional insured, project specifics, contact person, and primary project location)
Federally required forms (list all. Examples: SAM.gov check, etc.)
Original contract packet with previous contract amendments (if applicable)

Construction Contract Attachments:
Non-Collusion Affidavit of Subcontractor
Statement of Intent to pay prevailing wages
Affidavit of Wages Paid
Weekly Payroll Form
Payroll Statement of Compliance
Performance bond
Payment bond

City of Santa Fe, New Mexico
200 Lincoln Avenue, P.O. Box 909, Santa Fe, N.M. 87504-0909
www.santafenm.gov

Alan Webber, Mayor

Councilors:
Signe I. Lindell, Mayor Pro Tem, District 1
Renee Villarreal, District 1
Michael J. Garcia, District 2
Carol Romero-Wirth, District 2
Lee Garcia, District 3
Chris Rivera, District 3
Jamie Cassutt, District 4
Amanda Chavez, District 4

MEMORANDUM

Date: November 5, 2024

To: **Lumen Technologies**

Attn: **Larry Worstell, ITT Infrastructure Services Manager**

From: *Travis Dutton-Leyda, Chief Procurement Officer*, City of Santa Fe Purchasing Division
RE: GSA Contract **47QTCA20D077, Circuits Data Center**

The City of Santa Fe by mutual agreement between the City and **Lumen Technologies** is willing to enter into a GSA price agreement based on the following requirements:

1. Provide an updated Federal Supply Schedule to include current or updated contract dates.

2. *Purchases based on 13-1-129 (A)(1) NMSA 1978:* The Contractor is willing to extend their GSA pricing, terms and conditions to the City of Santa Fe at prices equal to or less than the contractor's current federal supply contract price (GSA), providing the contractor has indicated in writing a willingness to extend such contractor pricing, terms and conditions to the City of Santa Fe and the purchase order adequately identifies the contract relied upon.

Please respond by completing the information below. Check the proper box, fill in the requested information, including signature, scan and upload to the email you received with this request.

☑ **I agree to extend and/or renew the above referenced GSA price agreement.**

☐ **I DO NOT agree to extend and/or renew the above referenced GSA price agreement.**

Dan Sullivan, ACCOUNT DIRECTOR I - SLED	dan.sullivan@lumen.com
Print Name, Title	Email Address
Dan Sullivan	Lumen Technology Government Solutions, Inc. ("Lumen")
Signature	Company Name
11/5/2024	400 Tijeras Ave NW, Albuquerque NM 87102
Date	Address

Cc: Travis Dutton-Leyda, Chief Procurement Officer
Procurement File



General Services Administration Federal Supply

Authorized Federal Supply Service
Information Technology Schedule Price List
General Purpose Commercial Information Technology Equipment, Software and Services

Contract Number: 47QTCA20D0077.

Products and ordering information in this Authorized FSS Information Technology Schedule Pricelist are also available on the GSA *Advantage!* System. Agencies can browse GSA https://www.gsaadvantage.gov/advantage/main/start_page.do

For more information on ordering from Federal Supply Schedules click on the FSS Schedules button at fss.gsa.gov.

Confidential / Distribution restricted to Lumen Employees and Contractors under NDA

Approved Multiple Award Schedule (MAS) Special Item Numbers (SINs)

MAS SIN 33411 Purchase of New Electronic Equipment

MAS SIN 811212 Maintenance of Equipment, Repair Services and/or Repair/Spare Parts

MAS SIN 511210 Software Licenses

MAS SIN 518210C Cloud and Cloud-Related IT Professional Services

MAS SIN 611420 Information Technology Training

MAS SIN 54151S Information Technology Professional Services

MAS SIN 54151ECOM Electronic Commerce and Subscription Services

MAS SIN ANCILLARY Supplies and Services

Contract Number: 47QTCA20D0077
Period Covered by Contract: March 12, 2020, through March 11, 2025

Federal Supply Service
Authorized Federal Supply Schedule Price List
On-line access to contract ordering information, terms and conditions, up-to-date pricing, and the option to create an electronic delivery order are available through GSA *Advantage!*®, a menu-driven database system. The INTERNET address GSA *Advantage!*® is: GSAAdvantage.gov

Pricelist current through Modification Mod 107, 9/19/2024

Lumen Technologies Government Solutions, Inc.

4250 N. Fairfax Drive
Arlington, VA 22203

www.lumen.com
Contact: Shelley Rohleder
Senior Program Operations Manager
Email : Shelley.A.Rohleder@lumen.com
Phone : 913-312-2702
Fax : 703-363-3378

Products and ordering information in this Authorized FSS Information Technology Schedule Pricelist are also available on the GSA *Advantage!* System. Agencies can browse GSA https://www.gsaadvantage.gov/advantage/main/start_page.do

For more information on ordering from Federal Supply Schedules click on the FSS Schedules button at fss.gsa.gov.

Table of Contents

1.0 CUSTOMER INFORMATION 1

2.0 DEFINITION OF APPLICABLE SERVICE OFFERINGS AND TERMS & CONDITIONS 1

2.1 Multiple Award Schedule (MAS) SIN 511210: Definition of Service Offering and Terms & Conditions Applicable to Term Software Licenses for 1

2.1.1 Ciena Software 1
2.1.2 ARUBA Software 1

2.2 Multiple Award Schedule (MAS) SIN 518210C: Definition of Service Offering and Terms & Conditions Applicable to Cloud Computing Services 1

2.2.1 Lumen Federal Solutions Cloud Service Offering 1
2.2.2 Lumen Cloud Application Manager 6
2.2.3 Intact ReAccess 7

2.3 Multiple Award Schedule (MAS) SIN 54151ECOM: Definition of Service Offering and Terms & Conditions Applicable to Electronic Commerce Services 8

2.3.1 Uplogix 8
2.3.2 Lumen Distributed Denial of Service Mitigation Service Schedule 10
2.3.3 Lumen Hosted VoIP and IQ SIP Trunk 20
2.3.4 Lumen Hosted IVR 34
2.3.5 Lumen Interaction Routing (IR) 41
2.3.6 EZ Route 47
2.3.7 Lumen Hosted Area Network (HAN) Internet access. 48
2.3.8 Lumen Tailored Managed Network Services 48
2.3.9 Lumen Network Management Service (NMS) 51
2.3.10 Lumen IQ Networking 53
2.3.11 Lumen Dedicated Internet Access (DIA) 65
2.3.12 Voice Complete 69
2.3.13 Ethernet Line (E-Line) 75
2.3.14 eLynk 79
2.3.15 Voice T-1 81
2.3.16 Managed Network Service (Managed Router) 82
2.3.17 Wavelength Service 83
2.3.18 Telecommunications Service Priority (TSP) 86
2.3.19 IPVPN 86
2.3.20 E-LAN 90
2.3.21 Security Customer Premises Based Firewall (FW) 92
2.3.22 Security Non-Customer Premises Based Firewall (FW) 101
2.3.23 Managed Hosting Edge Hosting Environment (EHE) 110
2.3.24 Managed Server Foundation Hosting (FH) 118
2.3.25 Lumen Private Cloud on VMWare Cloud Foundation (VCF) 121
2.3.26 Lumen Edge Bare Metal 125
2.3.27 Lumen High Speed Internet Protocol 136
2.3.28 Lumen Metro Ethernet (ME) 139
2.3.29 Lumen Adaptive Network Security (ANS) 145
2.3.30 Cyxtera 153
2.3.31 Lumen Network Storage 154
2.3.32 Verge Technologies, Inc. SentientDB 157
2.3.33 Lumen Cloud Communications Service Schedule 158

2.4 Multiple Award Schedule (MAS) SIN Ancillary: Definition Of Service Offering and Terms & Conditions Applicable to Ancillary Supplies and Services 166

2.4.1 Ancillary Supplies & Services ADTRAN 166

3.0 PRICING 166

3.1 Multiple Award Schedule (MAS) SIN 33411 Purchase of Equipment Products and Pricing 166

Services not available everywhere. Business customers only. Lumen may change, cancel, or substitute products and services, or vary them by service area at its sole discretion without notice. ©2023 Lumen Technologies. All Rights Reserved.
Confidential / Distribution restricted to Lumen Employees and Contractors under NDA

3.1.1 ADTRAN Purchase of Equipment Products and Pricing 166
3.1.2 Hewlett Packard Enterprise (Aruba) Purchase of Equipment Products and Pricing 176
3.1.3 Uplogix Purchase of Equipment Products and Pricing 178
3.1.4 Ciena Purchase of Equipment Products and Pricing 179
3.2 Multiple Award Schedule (MAS) SIN 811212 Description of Maintenance, Repair Service, and Repair Parts/Spare Parts Products and Pricing 183
3.2.1 ADTRAN Maintenance and Repair 183
3.2.2 Aruba Maintenance and Repair 190
3.2.3 Uplogix Maintenance and Repair 191
3.2.4 Ciena Maintenance and Repair 191
3.3 Multiple Award Schedule (MAS) SIN 511210 Description of Software License 192
3.3.1 Ciena Software Licenses 192
3.3.2 Aruba Software Licenses 192
3.4 Multiple Award Schedule (MAS) SIN 518210C Cloud Computing Services Products and Pricing 193
3.4.1 Lumen Cloud Computing (CAM) 193
3.4.2 Intact ReAccess 194
3.5 Multiple Award Schedule (MAS) SIN 611420 Training Courses Products and Pricing 194
3.5.1 Adtran Training 194
3.6 Multiple Award Schedule (MAS) SIN 54151S Information Technology Professional Services and Pricing 195
3.6.1 Lumen Professional IT Services and Pricing 195
3.7 Multiple Award Schedule (MAS) SIN 54151ECOM Description of Electronic Commerce Services Products and Pricing 246
3.7.1 Lumen Distributed Denial of Service (DDoS) 246
3.7.2 Lumen Hosted VoIP 250
3.7.3 Lumen IQ SIP Trunk 252
3.7.4 Lumen Hosted IVR 252
3.7.5 Lumen Interaction Routing (IR) 253
3.7.6 Lumen EZRoute 254
3.7.7 Lumen HAN Internet (Access and Bandwidth) 254
3.7.8 Lumen Tailored Managed Network Services (TMNS) 255
3.7.9 Lumen Network Management Service (NMS) 257
3.7.10 Lumen IQ Networking 257
3.7.11 Dedicated Internet Access (DIA) 260
3.7.12 Voice Complete 262
3.7.13 Ethernet Line (E-Line) 262
3.7.14 eLynk 290
3.7.15 Voice T-1 292
3.7.16 Managed Router 292
3.7.17 Wavelengths 293
3.7.18 Telecommunications Service Priority (TSP) 295
3.7.19 IPVPN 295
3.7.20 E-LAN 296
3.7.21 Customer Premises Based Firewall 317
3.7.22 Non-Customer Premises Based Firewall 333
3.7.23 Managed Hosting Edge Hosting Environment (EHE) 344
3.7.24 Managed Server Foundation Hosting (FH) 344
3.7.25 Lumen Private Cloud on VMWare Cloud Foundation (VCF) 346
3.7.26 Lumen Edge Bare Metal 346
3.7.27 Lumen High Speed Internet Protocol Services (HSIP) 347
3.7.28 Lumen Metro Ethernet (ME) Services 348
3.7.29 Lumen Adaptive Network Security (ANS) Services 348

Services not available everywhere. Business customers only. Lumen may change, cancel, or substitute products and services, or vary them by service area at its sole discretion without notice. ©2023 Lumen Technologies. All Rights Reserved.
Confidential / Distribution restricted to Lumen Employees and Contractors under NDA

3.7.30 Cyxtera....351
3.7.31 Lumen Network Storage (LNS)....355
3.7.32 Verge SentientDB....355
3.7.33 Lumen Cloud Communications....355
3.8 Multiple Award Schedule (MAS) SIN Ancillary Supplies and Services And Pricing....360
3.8.1 ADTRAN Products and Pricing....360
3.8.2 Ciena Products and Pricing....361

Services not available everywhere. Business customers only. Lumen may change, cancel, or substitute products and services, or vary them by service area at its sole discretion without notice. ©2023 Lumen Technologies. All Rights Reserved.
Confidential / Distribution restricted to Lumen Employees and Contractors under NDA

1.0 CUSTOMER INFORMATION

1a. Awarded MAS SINs

MAS SIN 33411 PURCHASE OF NEW EQUIPMENT

FSC Class 5805 – TELEPHONE AND TELEGRAPH EQUIPMENT Audio and Video Teleconferencing Equipment

NOTE: Installation must be incidental to, in conjunction with and in direct support of the products sold under MAS SIN 33411 of this contract and cannot be purchased separately. If the construction, alteration or repair is segregable and exceeds $2,000, then the requirements of the Davis-Bacon Act apply.

MAS SIN 811212 MAINTENANCE OF EQUIPMENT, REPAIR SERVICES AND/OR REPAIR/SPARE PARTS

(FPDS Code J070 – Maintenance and Repair Service) (Repair Parts/Spare Parts – See FSC Class for basic equipment): Maintenance, Repair Service, Repair Parts/Spare Parts

MAS SIN 511210 SOFTWARE LICENSES

FSC CLASS 7030 – INFORMATION TECHNOLOGY SOFTWARE

Includes operating system software, application software, EDI translation and mapping software, enabled E-Mail message-based products, Internet software, database management programs, and other software. Software maintenance as a product includes the publishing of bug/defect fixes via patches and updates/upgrades in function and technology to maintain the operability and usability of the software product. It may also include other no charge support that is included in the purchase price of the product in the commercial marketplace. No charge process includes items such as user blogs, discussion forums, on-line help libraries and FAQs (Frequently Asked Questions), hosted chat rooms, and limited telephone, email and/or web-based general technical support for users self-diagnostics.

MAS SIN 518210C CLOUD AND CLOUD-RELATED IT PROFESSIONAL SERVICES—SUBJECT TO COOPERATIVE PURCHASING

Includes commercially available cloud computing services such as Infrastructure as a Service (IaaS), Platform as a Service (PaaS), and Software as a Service (SaaS) and emerging cloud services.

MAS SIN 611420 TRAINING COURSES FOR INFORMATION TECHNOLOGY EQUIPMENT AND SOFTWARE

(FPDS Code U012)

MAS SIN 54151S INFORMATION TECHNOLOGY (IT) PROFESSIONAL SERVICES

FPDS Code D301: IT Facility Operation and Maintenance
FPDS Code D307: Automated Information Systems Design and Integration Services

NOTE 1: All non-professional labor categories must be incidental to and used solely to support hardware, software and/or professional services, and cannot be purchased separately.

NOTE 2: Offerors and Agencies are advised that the Group 70—Information Technology Schedule is not to be used to procure services which properly fall under the Brooks Act. These services include, but are not limited to, architecture, engineering, mapping, cartographic production, remote sensing, geographic information systems, and related services. FAR 36.6 distinguishes between mapping services of an A/E nature and mapping services which are not connected nor incidental to the traditionally accepted A/E Services.

NOTE 3: This solicitation is not intended to solicit for the reselling of IT Professional Services, except for the provision of implementation, maintenance, integration, or training services in direct support of a product. Under such circumstances the services must be performed by the publisher or manufacturer or one of their authorized agents.

MAS SIN 54151ECOM ELECTRONIC COMMERCE (EC) ANS SUBSCRIPTION SERVICES

FPDS Code D304: Value Added Network Services (VANs)
FPDS Code D304: E-Mail Services
FPDS Code D304: Internet Access Services

Services not available everywhere. Business customers only. Lumen may change, cancel, or substitute products and services, or vary them by service area at its sole discretion without notice. ©2024 Lumen Technologies. All Rights Reserved.
Confidential / Distribution restricted to Lumen Employees and Contractors under NDA

FPDS Code D399: Other Data Transmission Services, Not Elsewhere Classified—Except "Voice" and Pager Services

NOTE: Electronic Commerce Services are not intended to supersede or be substitute for any voice requirements of FTS2001.

1b. Identification of the lowest priced model number and lowest unit price for that model for each special item number awarded in the contract.

MAS SIN	Sub SIN	Product Name	Part #	Product Description	Lumen or Supplier	GSA Price with IFF
33411	132-8.5975	**ADTRAN**	1100ALR2101WIF1	ADTRAN—ProStart Remote installation for a blue socket Access Point (1800, 1840, 1920, 1925, 1930, 1935, 2030, 2035). This part number must be purchased in conjunction with either the ProStart Remote Installation for Blue socket vWLAN or the ProStart Remote Installation for Blue socket vWLAN with ProCloud Wi-Fi. Part number includes remote configuration, testing, and turn up support of a BSAP. Includes 14 calendar day labor warranty. ADTRAN ProStart support is delivered during normal business hours, 8 am -5pm site time, Monday through Friday. If you require ProStart Installation support for AP expansion of an existing network, contact prostart@adtran.com for a custom quote.	**ADTRAN**	$9.06
811212	132-12.2633	**Ciena 80M-MCPBA-COM**	**80M-MCPBA-COM**	**MCP BASE SW, COMPREHENSIVE SUPPORT**	Ciena	$1.15
511210	132-32.88	**Ciena S74-LIC-NTK569MU**	**S74-LIC-NTK569MU**	**6500 REL 12.7 SOFTWARE LICENSE**	**Ciena**	**$0.40**
518210C	132-40.136	Cloud Application Manager BYOC	132-40.136	Cloud Application Manager (CAM). Lumen Platform & Bring Your Own Cloud Provider (BYOC). Application Lifecycle Management. Per instance/hour metering. Required: Additional Purchase Lumen Led Cloud Support (LLCS).	Lumen	$0.06
611420	132-50.0012	I&M Atlas Prod IN Ded and SWT Training	1600ATLAS01E	ADTRAN—Installation & Maintenance, Atlas Products Installation Dedicated and Switched Training; 3-day course; Per Person pricing	ADRAN	$1,086.59
54151S	QGSI-PS37	Hardware Specialist	QGSI-PS37	Partner in a team environment or be able to independently install, repair, and perform preventative maintenance, (including upgrades and backups) of computer systems. May resolve hardware, software, network, and application problems.	Lumen	$51.59
54151ECOM	132-52.9387	Voice Features DID Number Assignment and Maintenance	132-52.9387	DID Number Assignment and Maintenance	Lumen	$0.01
Ancillary	132-100.211	Ciena 495-0000-001	495-0000-001	FREIGHT/HANDLING CHARGES	Ciena	$1.15

1c. See Pricing for Details

2. Maximum Order (All dollar amounts are exclusive of any discount for prompt payment.)

- The Maximum Order value for the following Multiple Award Schedule (MAS) Special Item Numbers (SINs) is $500,000:
  - MAS SIN 33411—Purchase of Equipment
  - MAS SIN 811212—Maintenance, Repair Service and Repair Parts/Spare Parts
  - MAS SIN 511210—Term Software Licenses
  - MAS SIN 518210C—Cloud Computing Services
  - MAS SIN 54151S—Information Technology (IT) Professional Services
  - MAS SIN 54151ECOM—Electronic Commerce (EC) Services
- The Maximum Order value for the following MAS SIN is $25,000:
  - MAS SIN 611420—Training Courses

Services not available everywhere. Business customers only. Lumen may change, cancel, or substitute products and services, or vary them by service area at its sole discretion without notice. ©2024 Lumen Technologies. All Rights Reserved.
Confidential / Distribution restricted to Lumen Employees and Contractors under NDA

3. Minimum Order

The minimum dollar value of orders to be issued is $100.

4. Geographic Scope of Contract

The Geographic Scope of Contract will be domestic delivery only. Domestic delivery is delivery within the 48 contiguous states, Alaska, Hawaii, Puerto Rico, Washington, DC, and U.S. Territories. Domestic delivery also includes a port or consolidation point, within the aforementioned areas, for orders received from overseas activities.

5. Points of Production

6. Prices Shown Herein are Net (discount deducted)

7. Quantity Discounts

None

8. Prompt Payment Terms

0% - NET 30 days from receipt of invoice or date of acceptance, whichever is later

9a. Government Purchase Cards Below Micro Purchase

Contractors are required to accept the Government purchase card for payments equal to or less than the micro purchase threshold for oral or written delivery orders.

9b. Government Purchase Cards Above Micro Purchase

Government purchase cards will be acceptable for payment above the micro-purchase threshold. In addition, bank account information for wire transfer payments will be shown on the invoice.

10. Foreign Items

11a. Time of Delivery

The Contractor shall deliver to destination within the number of calendar days after receipt of order (ARO), as set forth below:

SPECIAL ITEM NUMBER	DELIVERY TIME (Days ARO)
All	30 Days

11b. Expedited Delivery

When the Federal Supply Schedule contract delivery period does not meet the bona fide urgent delivery requirements of an ordering agency, agencies are encouraged, if time permits, to contact the Contractor for the purpose of obtaining accelerated delivery. The Contractor shall reply to the inquiry within 3 workdays after receipt. (Telephonic replies shall be confirmed by the Contractor in writing.) If the Contractor offers an accelerated delivery time acceptable to the ordering agency, any order(s) placed pursuant to the agreed upon accelerated delivery time frame shall be delivered within this shorter delivery time and in accordance with all other terms and conditions of the contract.

11c. Overnight and 2 Day Delivery

The schedule customer may contact the Contractor for rates for overnight and 2-day delivery.

11d. Urgent Requirements

When the Federal Supply Schedule contract delivery period does not meet the bona fide urgent delivery requirements of an ordering agency, agencies are encouraged, if time permits, to contact the Contractor for the purpose of obtaining accelerated delivery. The Contractor shall reply to the inquiry within 3 workdays after receipt. (Telephonic replies shall be confirmed by the Contractor in writing.) If the Contractor offers an accelerated delivery time acceptable to the ordering agency, any order(s) placed pursuant to the agreed upon accelerated delivery time frame shall be delivered within this shorter delivery time and in accordance with all other terms and conditions of the contract.

12. F.O.B. Point(s).

Services not available everywhere. Business customers only. Lumen may change, cancel, or substitute products and services, or vary them by service area at its sole discretion without notice. ©2024 Lumen Technologies. All Rights Reserved.
Confidential / Distribution restricted to Lumen Employees and Contractors under NDA

13a. Ordering address:

Lumen Technologies Government Solutions, Inc.
4250 N. Fairfax Drive
Arlington, VA 22203-1665

The following telephone number can be used by ordering agencies to obtain technical and/or ordering assistance: Shelley Rohleder, 913-213-5299.

13b. Ordering Instructions

Ordering activities shall use the ordering procedures of Federal Acquisition Regulation (FAR) 8.405 when placing an order or establishing a BPA for supplies or services. These procedures apply to all schedules.

a. FAR 8.405-1 Ordering procedures for supplies, and services not requiring a statement of work.
b. FAR 8.405-2 Ordering procedures for services requiring a statement of work.

14. Payment Address:

Lumen Technologies Government Solutions, Inc.
P.O. Box 52187
Phoenix, Arizona 85072-2187

15. CONTRACTOR COMMITMENTS, WARRANTIES AND REPRESENTATIONS

a. For this contract, commitments, warranties, and representations includes, in addition to those agreed to for the entire schedule contract:
   (1) Time of delivery/installation quotations for individual orders.
   (2) Technical representations and/or warranties of products concerning performance, total system performance and/or configuration, physical, design and/or functional characteristics and capabilities of a product/equipment/ service/software package submitted in response to requirements which result in orders under this schedule contract.
   (3) Any representations and/or warranties concerning the products made in any literature, description, drawings and/or specifications furnished by the Contractor.
b. The above is not intended to encompass items not currently covered by the GSA Schedule contract.

16. Export Packing Charges

17. Terms and conditions of Government purchase card acceptance (any thresholds above the micro-purchase level).

18. Terms and conditions of rental, maintenance, and repair (if applicable).

19. Terms and conditions of installation (if applicable).

20. Terms and conditions of repair parts indicating date of parts price lists and any discounts from list prices (if applicable).

20a. Terms and conditions for any other services (if applicable).

21. List of service and distribution points (if applicable).

22. List of participating dealers (if applicable).

23. Preventive maintenance (if applicable).

Services not available everywhere. Business customers only. Lumen may change, cancel, or substitute products and services, or vary them by service area at its sole discretion without notice. ©2024 Lumen Technologies. All Rights Reserved.
Confidential / Distribution restricted to Lumen Employees and Contractors under NDA

24a. Special attributes such as environmental attributes (e.g., recycled content, energy efficiency, and/or reduced pollutants).

24b. If applicable, indicate that Section 508 compliance information is available on Electronic and Information Technology (EIT) supplies and services and show where full details can be found (e.g. contractor's website or other location.) The EIT standards can be found at: www.Section508.gov/.

25. Data Universal Numbering System (DUNS) Number: 178617031

26. Contractor has registered with the Central Contractor Registration Database.

Services not available everywhere. Business customers only. Lumen may change, cancel, or substitute products and services, or vary them by service area at its sole discretion without notice. ©2024 Lumen Technologies. All Rights Reserved.
Confidential / Distribution restricted to Lumen Employees and Contractors under NDA

ORDER ADDENDUM

This **ADDENDUM TO CUSTOMER ORDER** ("Addendum") is entered into as of the last date of signature below (the "Addendum Effective Date"), by and between **Lumen Technology Government Solutions, Inc.** ("Lumen") and **City of Santa Fe** ("Customer"), and modifies the Customer Order with **SM10650391/R694949, SM10650373/R694953, R701684/59508228, R573499/58967262** (the "Customer Order"), a copy of which is attached hereto as EXHIBIT A. Lumen and Customer may be referred to herein collectively as the "Parties" and individually as a "Party."

WHEREAS the Parties wish to modify the Customer Order to incorporate revised terms applicable to the same.

NOW THEREFORE, the Parties agree to modify the Customer Order in the following limited respects:

1. **Order Submittal.** Contemporaneously with the execution of this Addendum, Customer shall execute and deliver the Customer Order to Lumen.

2. **Section 4**. The Parties acknowledge and agree that Section 4 in the terms and conditions is replaced with the following:

"4. Customer places this Order by signing (including electronically or digitally) or otherwise acknowledging (in a manner acceptable to Lumen) this document and returning it to Lumen. The Service identified in this Order shall be governed by and subject to the contract number **47QTCA20D0077** between GSA and Qwest Government Services, Inc. Customer agrees to the terms and conditions set forth in the Schedule 70 contract between Qwest Government Services, Inc. and GSA and hereby confirms that it will follow the cooperative purchasing requirements set out by GSA. The service level agreement(s) for the Service(s) contained in this Order are subject to Lumen's standard Service Schedule(s) (as of the date of this Order), a copy of which are available upon request. Services contained within this Order that are not contained on the Schedule 70 contract shall be governed by and subject to the Master Service Agreement(s) and Service Schedule(s) (if any) between Lumen and Customer for those Service(s) not contained on the Schedule 70 contract applicable to such Service(s). The applicable agreement may be between Customer and Lumen's affiliate if expressly provided for under such affiliate Master Service Agreement. If Customer has not executed a Master Services Agreement with Lumen but has executed a services agreement (including but not limited to Standard Terms and Conditions) with an affiliate of Lumen ("Affiliate Agreement"), then the terms of the most recent such Affiliate Agreement shall apply to the Service herein (to the extent not inconsistent with this Order) provided that in such cases, the current standard Lumen Service Schedule applicable to the Services shall apply. In the event that Lumen and Customer have not executed a Master Service Agreement and/or applicable Service Schedule(s) with respect to such Service and have not executed an Affiliate Agreement, (i) Lumen's standard Master Service Agreement/Service Schedule(s) (as of the date of this Order) shall govern, a copy of which are available upon request and (ii) the Lumen contracting party shall be the Lumen entity invoicing such Services. Notwithstanding anything in any Affiliate Agreement to the contrary, Lumen's acceptance of this Order will be evidenced by (and this Order will be binding on both parties upon) the earlier of Lumen's written delivery of a Customer Commit Date ("CCD") (i.e. the projected installation date) or Lumen's delivery of the requested Service, and, at the end of the Service Term the Services set forth herein shall renew on a month to month basis, terminable by either party with 30 days' advanced written notice and the rates are subject to change upon 30 days' notice from Lumen. "Affiliate Agreement" for CenturyLink Communications. LLC d/b/a Lumen Technologies Group ("Lumen") or any companies that were affiliates of Lumen before the merger between CenturyLink, Inc. and Level 3 Communications, Inc. means only an applicable Interexchange Carrier network agreement (e.g. CenturyLink Total Advantage Agreement, CenturyLink Total Advantage Express Agreement, CenturyLink Wholesale Services Agreement or CenturyLink Master Service Agreement) for non-government customers. In the event of a Lumen Affiliate Agreement, (a) Lumen will deliver a written or electronic notice that the Service is installed (a "Connection Notice"), at which time billing will commence, and (b) if Customer cancels or terminates Service for any reason other than Lumen's uncured default or if Lumen terminates due to Customer's uncured default, Customer shall pay Lumen's standard early termination liability charges as identified in Lumen's ancillary charge summary, a copy of which is available upon request."

3. **Limitation**. This Addendum shall apply to the Customer Order and shall have no applicability to any other Customer Order(s) that Customer may have submitted or may submit to Lumen in the future.

These terms and conditions have been read, are understood, and are hereby accepted as of the Addendum Effective Date.

LUMEN TECHNOLOGY GOVERNMENT SOLUTIONS, INC.
("Lumen")

By: Alex Khanin
Alex Khanin (Oct 22, 2024 14:19 MDT)

Name: Alex Khanin

Title: Manager Offer Management

Date: Oct 22, 2024

City of Santa Fe
("Customer")

By: _____

Name: _____

Title: _____

Date: _____

OMR# **R701684, R573499, R694949, R694953**

OMR# **R701684, R573499, R694949, R694953**

EXHIBIT A

THE CUSTOMER ORDER

[SEE ATTACHED]

R701684 City of Santa Fe 6.20.24
QC Wave Table for GSA Cover Letter

CAR L341567 **Following prices requires a Minimum Service Period of 36 Months**

Circuit Type	Service Element	Quantity (# of rate ele-ments / miles)	Originating Location (address, city, state)	Terminating Location (address, city, state)	Design Type	Term	MRC per Rate Element / Miles	Total MRC	Total NRC
10 Gbps LAN PHY – Unprotected	Optical Channel	2	715 Alta Vista St, Santa Fe, NM, 87505	123 Central Ave NW, Albuquerque, NM, 87102	10 Gbps LAN PHY – Unprotected	36 Months	$1,000.00 Per Optical Channel	$2,000.00	$0.00
10 Gbps LAN PHY – Unprotected	Mileage	56	715 Alta Vista St, Santa Fe, NM, 87505	123 Central Ave NW, Albuquerque, NM, 87102	10 Gbps LAN PHY – Unprotected	36 Months	$10.00 Per Mile	$560.00	$0.00
10 Gbps LAN PHY – Unprotected	Optical Channel	2	715 Alta Vista St, Santa Fe, NM, 87505	123 Central Ave NW, Albuquerque, NM, 87102	10 Gbps LAN PHY – Unprotected	36 Months	$1,000.00 Per Optical Channel	$2,000.00	$0.00
10 Gbps LAN PHY – Unprotected	Mileage	56	715 Alta Vista St, Santa Fe, NM, 87505	123 Central Ave NW, Albuquerque, NM, 87102	10 Gbps LAN PHY – Unprotected	36 Months	$10.00 Per Mile	$560.00	$0.00
	Avoidance	1	715 Alta Vista St, Santa Fe, NM, 87505	123 Central Ave NW, Albuquerque, NM, 87102	Unprotected	36 Months	$20.00	$20.00	$0.00
							Total	$5,140.00	$0.00

Customer Information and Contract Specifications

Customer Name: City of Sante Fe - NM
Account Number: 3-A72803

Currency: USD
Monthly Recurring Charges (MRC): $1,449.00
Non Recurring Charges (NRC): 0

Service Order

Service Address	Description	Order Type	Term (Months)	Qty	Unit MRC	Unit NRC	Total MRC	Total NRC
123 CENTRAL AVE NW ALBUQUERQUE NEW MEXICO 87102 3408 UNITED STATES	**IP VPN Port and Access** - Standard Delivery - To the MPoE (Customer Provided)	New	36	1	$0.00	$0.00	$0.00	$0.00
	Port - 10GIG-E WAVE			1	$0.00	$0.00	$0.00	$0.00
	Transport	New	36	1			$1,000.00	$0.00
	Subtotal						**$1,000.00**	**$0.00**
123 CENTRAL AVE NW ALBUQUERQUE NEW MEXICO 87102 3408 UNITED STATES	**IP VPN Logical Interface (1 Gbps CIR, Flat Rate)** - Class of Service = Single: Premium Plus - Committed Information Rate (CIR) = 1 Gbps	New	36	1	$449.00	$0.00	$449.00	$0.00
	Subtotal						**$449.00**	**$0.00**
	Totals						**$1,449.00**	**$0.00**

*If the Service Address column above is blank, no Service Address is required for the Service or the Service Address is identified as a data center in the Description column.

SLED Terms and Conditions Governing This Order

1.“Lumen” is defined for purposes of this Order as CenturyLink Communications, LLC d/b/a Lumen Technologies Group or its affiliated entities providing Services under this Order. The Lumen entity providing Services is identified on the invoice. This Order is subject to the applicable state or municipal public records laws governing Customer and is non-binding until accepted by Lumen, as set forth in section 4. Customer places this Order by signing or otherwise acknowledging (in a manner acceptable to Lumen) this document and returning it to Lumen. Pricing is valid for 90

calendar days from the date indicated unless otherwise specified.

2. Prior to installation, Lumen may notify Customer in writing (including by e-mail) of price increases due to off-net vendors or increased construction costs. Customer has 5 business days following notice to cancel this Order without liability; or otherwise, Customer is deemed to accept the increase.

3. If a generic demarcation point (such as a street address) is provided, the demarcation point for on-net services will be Lumen's Minimum Point of Entry (MPOE) at such location (as determined by Lumen). Off-net demarcation points will be the off-net vendor's MPOE. If this Order identifies aspects of services that are procured by Customer directly from third parties, Lumen is not liable for such services.

4. The service(s) identified in this Order (the "Service(s)") is/are subject to the current, unexpired services agreement between Customer and Lumen ("Existing Agreement") provided if a service attachment describing the Services is not included in the Existing Agreement, then the current standard applicable Lumen Service Attachment(s) will apply in addition to the Existing Agreement. If Customer and Lumen do not have a current Existing Agreement,Services are subject to Lumen's standard Master Service Agreement(s), State, Local and Education Government Agencies Version, Public Safety Version for public safety services, or E-Rate Version for E-Rate eligible services (each, a "Lumen MSA"), and applicable Service Attachment(s) for the Services described in this Order will govern, copies of which are available at https://www.lumen.com/en-us/about/legal/business-customer-terms-conditions.html or upon request, unless Customer has executed a service agreement with Lumen or one of its affiliates applicable to the Services on this Order. In that case, the most recent service agreement will apply to the extent not inconsistent with this Order and the current Service Schedule(s) will apply and is/are specifically incorporated into the applicable agreement by this reference. Customer will accept and pay all charges indicated on invoices for the Services.

Notwithstanding anything to the contrary, Lumen will notify Customer of acceptance of requested Service in this Order by delivering (in writing or electronically) the date by which Lumen will install Service (the "Customer Commit Date"), by delivering the Service, or by the manner described in a Service Schedule. Lumen will deliver a written or electronic notice that the Service is provisioned, at which time billing will commence. At the expiration of the Service Term, Service will continue month-to-month at the existing rates, subject to change by Lumen on 30 days' written notice. If the service agreement or applicable service specific terms do not include cancellation or early termination charges and if Customer cancels or terminates Service for any reason other than Lumen's uncured default or if Lumen cancels or terminates or cause, then Customer will pay Lumen's standard cancellation or early termination liability charges in the current standard Lumen MSA.

5. Neither party will be liable for any damages for lost profits, lost revenues, loss of goodwill, loss of anticipated savings, loss of data or cost of purchasing replacement service, or any indirect, incidental, special, consequential, exemplary or punitive damages arising out of the performance or failure to perform under this Order. Customer's sole remedies for any nonperformance, outages, failures to deliver or defects in Service are contained in the service levels applicable to the affected Service.

6. Transport services ordered from Lumen will be treated as interstate for regulatory purposes except as otherwise agreed to in writing.

7. Charges for certain Services are subject to (a) a monthly property tax surcharge and (b) a monthly cost recovery fee per month to reimburse Lumen for various governmental taxes and surcharges. Such charges are subject to change by Lumen and will be applied regardless of whether Customer has delivered a valid tax exemption certificate. For additional details on taxes and surcharges that are assessed, visit http://www.lumen.com/taxes.

8. Unless otherwise set forth in a Service Attachment, Customer will pay Lumen's standard ancillary charges for expedites and additional activities, features, or options as set forth in the Ancillary Fee Schedule, available at http://www.lumen.com/ancillary-fees. If Lumen cannot complete installation due to Customer delay or inaction, Lumen

may begin charging Customer and Customer will pay such charges.

9. For colocation, data center and/or hosting services, pre-arranged escorted access may be required at certain locations, and cross connect services are subject to whether facilities are available at the particular location to complete the connection.

10. Compliance with Laws. The parties comply with all laws and regulations applicable to the execution of this Order and to the provision of Services by Lumen, including, as applicable, procurement laws or regulations regarding cumulative purchases of Services by Customer.

11. E-Rate and/or RHC/HCF Funding. If Customer applies for or seeks E-Rate and/or RHC/HCF funding for the Service(s) to be provided under this Order, Customer's Service(s) will be governed by a current eligible Existing Agreement, or if Customer and Lumen do not have a current eligible Existing Agreement, the Lumen E-Rate MSA or Lumen SLED MSA with the E-Rate and/or RHC/HCF Program Addendum will apply and must be executed contemporaneously with this Order.

12. If your network service utilizes TDM technologies, then the following applies: (a) During the Service Term and on 60 days' prior written notice, Lumen may re-provision Customer's off-net TDM services ("Service Re-provision"). If Customer objects to the Service Re-provision, Customer may terminate the affected service by notifying Lumen in writing within 30 days of the date of the Service Re-provision notification; and (b) During the Service Term, Lumen may increase rates for off-net TDM services. Lumen will provide Customer 60 days' prior written notice before implementing the increase ("Rerate Notice"). If Customer objects to the increase, Customer must notify Lumen in writing within 30 days of the date of the Rerate Notice whether Customer will (i) receive the affected service on a month-to-month basis or (ii) terminate the affected service, subject to early termination liability charges. Under subsection (ii), Customer's requested disconnect date must be within 90 days of the Rerate Notice. Unless Customer so notifies Lumen, the affected service will continue to be provided at the increased rates. If Customer does not respond to the Rerate Notice, the affected service will continue to be provided at the increased rates set forth in the Rerate Notice.

13. Infrastructure Investment and Jobs Act (IIJA) Grant Programs. If Customer participates in an IIJA program, including but not limited to, the Middle Mile Grant, Tribal Connectivity Broadband, and the Broadband Equity Access and Deployment (BEAD) Grant Programs, then Customer cannot pay for Services with funds obtained through the IIJA or other similar grants that would obligate Lumen to provide certain information or perform certain regulatory compliance functions, unless each of those functions and obligations is explicitly identified and agreed to by the parties in the Agreement or in an amendment to the Agreement.

Additional Order Terms

Invoices

Single prices shown above for bundled Services, or for Services provided at multiple locations, will be allocated among the individual services for the purpose of applying Taxes and regulatory fees and also may be divided on Customer's invoice by location served.

Activation Support

If requested by Customer, and for an additional charge, Lumen will provide assistance with activating and/or configuring equipment on Customer's side of the Demarcation Point ("Activation Support").

Signature Block

Customer: City of Sante Fe - NM
Signature:
Name: Alan Webber
Title: Mayor
Date:

Customer and the individual signing above represent that such individual has the authority to bind Customer to this Agreement.

Document Generation Date: 07-02-2024

Customer Information and Contract Specifications

Customer Name: City of Sante Fe - NM
Account Number: 3-A72803

Currency: USD
Monthly Recurring Charges (MRC): $1,200.00
Non Recurring Charges (NRC): 0

Service Order

Service Address	Description	Order Type	Term (Months)	Qty	Unit MRC	Unit NRC	Total MRC	Total NRC
123 CENTRAL AVE NW ALBUQUERQUE NEW MEXICO 87102 3408 UNITED STATES	**IP VPN Port and Access** - Standard Delivery - To the MPoE (Customer Provided)	New	36	1	$0.00	$0.00	$0.00	$0.00
	Port - 1 Gbps			1	$0.00	$0.00	$0.00	$0.00
	Transport	New	36	1			$940.00	$0.00
	Subtotal						**$940.00**	**$0.00**
123 CENTRAL AVE NW ALBUQUERQUE NEW MEXICO 87102 3408 UNITED STATES	**IP VPN Logical Interface (100 Mbps CIR, Flat Rate)** - Class of Service = Single: Premium Plus - Committed Information Rate (CIR) = 100 Mbps	New	36	1	$260.00	$0.00	$260.00	$0.00
	Subtotal						**$260.00**	**$0.00**
	Totals						**$1,200.00**	**$0.00**

*If the Service Address column above is blank, no Service Address is required for the Service or the Service Address is identified as a data center in the Description column.

SLED Terms and Conditions Governing This Order

1.“Lumen” is defined for purposes of this Order as CenturyLink Communications, LLC d/b/a Lumen Technologies Group or its affiliated entities providing Services under this Order. The Lumen entity providing Services is identified on the invoice. This Order is subject to the applicable state or municipal public records laws governing Customer and is non-binding until accepted by Lumen, as set forth in section 4. Customer places this Order by signing or otherwise acknowledging (in a manner acceptable to Lumen) this document and returning it to Lumen. Pricing is valid for 90

calendar days from the date indicated unless otherwise specified.

2. Prior to installation, Lumen may notify Customer in writing (including by e-mail) of price increases due to off-net vendors or increased construction costs. Customer has 5 business days following notice to cancel this Order without liability; or otherwise, Customer is deemed to accept the increase.

3. If a generic demarcation point (such as a street address) is provided, the demarcation point for on-net services will be Lumen's Minimum Point of Entry (MPOE) at such location (as determined by Lumen). Off-net demarcation points will be the off-net vendor's MPOE. If this Order identifies aspects of services that are procured by Customer directly from third parties, Lumen is not liable for such services.

4. The service(s) identified in this Order (the "Service(s)") is/are subject to the current, unexpired services agreement between Customer and Lumen ("Existing Agreement") provided if a service attachment describing the Services is not included in the Existing Agreement, then the current standard applicable Lumen Service Attachment(s) will apply in addition to the Existing Agreement. If Customer and Lumen do not have a current Existing Agreement,Services are subject to Lumen's standard Master Service Agreement(s), State, Local and Education Government Agencies Version, Public Safety Version for public safety services, or E-Rate Version for E-Rate eligible services (each, a "Lumen MSA"), and applicable Service Attachment(s) for the Services described in this Order will govern, copies of which are available at https://www.lumen.com/en-us/about/legal/business-customer-terms-conditions.html or upon request, unless Customer has executed a service agreement with Lumen or one of its affiliates applicable to the Services on this Order. In that case, the most recent service agreement will apply to the extent not inconsistent with this Order and the current Service Schedule(s) will apply and is/are specifically incorporated into the applicable agreement by this reference. Customer will accept and pay all charges indicated on invoices for the Services.

Notwithstanding anything to the contrary, Lumen will notify Customer of acceptance of requested Service in this Order by delivering (in writing or electronically) the date by which Lumen will install Service (the "Customer Commit Date"), by delivering the Service, or by the manner described in a Service Schedule. Lumen will deliver a written or electronic notice that the Service is provisioned, at which time billing will commence. At the expiration of the Service Term, Service will continue month-to-month at the existing rates, subject to change by Lumen on 30 days' written notice. If the service agreement or applicable service specific terms do not include cancellation or early termination charges and if Customer cancels or terminates Service for any reason other than Lumen's uncured default or if Lumen cancels or terminates or cause, then Customer will pay Lumen's standard cancellation or early termination liability charges in the current standard Lumen MSA.

5. Neither party will be liable for any damages for lost profits, lost revenues, loss of goodwill, loss of anticipated savings, loss of data or cost of purchasing replacement service, or any indirect, incidental, special, consequential, exemplary or punitive damages arising out of the performance or failure to perform under this Order. Customer's sole remedies for any nonperformance, outages, failures to deliver or defects in Service are contained in the service levels applicable to the affected Service.

6. Transport services ordered from Lumen will be treated as interstate for regulatory purposes except as otherwise agreed to in writing.

7. Charges for certain Services are subject to (a) a monthly property tax surcharge and (b) a monthly cost recovery fee per month to reimburse Lumen for various governmental taxes and surcharges. Such charges are subject to change by Lumen and will be applied regardless of whether Customer has delivered a valid tax exemption certificate. For additional details on taxes and surcharges that are assessed, visit http://www.lumen.com/taxes.

8. Unless otherwise set forth in a Service Attachment, Customer will pay Lumen's standard ancillary charges for expedites and additional activities, features, or options as set forth in the Ancillary Fee Schedule, available at http://www.lumen.com/ancillary-fees. If Lumen cannot complete installation due to Customer delay or inaction, Lumen

may begin charging Customer and Customer will pay such charges.

9. For colocation, data center and/or hosting services, pre-arranged escorted access may be required at certain locations, and cross connect services are subject to whether facilities are available at the particular location to complete the connection.

10. Compliance with Laws. The parties comply with all laws and regulations applicable to the execution of this Order and to the provision of Services by Lumen, including, as applicable, procurement laws or regulations regarding cumulative purchases of Services by Customer.

11. E-Rate and/or RHC/HCF Funding. If Customer applies for or seeks E-Rate and/or RHC/HCF funding for the Service(s) to be provided under this Order, Customer's Service(s) will be governed by a current eligible Existing Agreement, or if Customer and Lumen do not have a current eligible Existing Agreement, the Lumen E-Rate MSA or Lumen SLED MSA with the E-Rate and/or RHC/HCF Program Addendum will apply and must be executed contemporaneously with this Order.

12. If your network service utilizes TDM technologies, then the following applies: (a) During the Service Term and on 60 days' prior written notice, Lumen may re-provision Customer's off-net TDM services ("Service Re-provision"). If Customer objects to the Service Re-provision, Customer may terminate the affected service by notifying Lumen in writing within 30 days of the date of the Service Re-provision notification; and (b) During the Service Term, Lumen may increase rates for off-net TDM services. Lumen will provide Customer 60 days' prior written notice before implementing the increase ("Rerate Notice"). If Customer objects to the increase, Customer must notify Lumen in writing within 30 days of the date of the Rerate Notice whether Customer will (i) receive the affected service on a month-to-month basis or (ii) terminate the affected service, subject to early termination liability charges. Under subsection (ii), Customer's requested disconnect date must be within 90 days of the Rerate Notice. Unless Customer so notifies Lumen, the affected service will continue to be provided at the increased rates. If Customer does not respond to the Rerate Notice, the affected service will continue to be provided at the increased rates set forth in the Rerate Notice.

13. Infrastructure Investment and Jobs Act (IIJA) Grant Programs. If Customer participates in an IIJA program, including but not limited to, the Middle Mile Grant, Tribal Connectivity Broadband, and the Broadband Equity Access and Deployment (BEAD) Grant Programs, then Customer cannot pay for Services with funds obtained through the IIJA or other similar grants that would obligate Lumen to provide certain information or perform certain regulatory compliance functions, unless each of those functions and obligations is explicitly identified and agreed to by the parties in the Agreement or in an amendment to the Agreement.

Additional Order Terms

Invoices

Single prices shown above for bundled Services, or for Services provided at multiple locations, will be allocated among the individual services for the purpose of applying Taxes and regulatory fees and also may be divided on Customer's invoice by location served.

Activation Support

If requested by Customer, and for an additional charge, Lumen will provide assistance with activating and/or configuring equipment on Customer's side of the Demarcation Point ("Activation Support").

Signature Block

Customer: City of Sante Fe - NM
Signature:
Name: Alan Webber
Title: Mayor
Date:

Customer and the individual signing above represent that such individual has the authority to bind Customer to this Agreement.

Document Generation Date: 07-16-2024

4 STATEMENT OF WORK

SOW CHANGE REQUEST FOR City of Santa Fe – NM
Agreement Pramata ID # 3028478
Quote Number: >>XXXXXX [If Applicable]<<

1. SOW CHANGE REQUEST OVERVIEW

This SOW Change Request 02 ("SOW Change Request") sets forth the changes to the above identified Statement of Work for the Services concerning the ("Project") executed by Lumen and City of Santa Fe -NM on 03/09/2022 ("SOW") . "Lumen" is defined for purposes of this SOW as CenturyLink Communications, LLC d/b/a Lumen Technologies Group or an affiliated entity as identified below. In the event of any inconsistencies between the terms of this or any prior SOW Change Request(s) and the SOW, the terms of this SOW Change Request will govern. Except as modified within this or a prior SOW Change Request, all the terms of the SOW will remain unchanged. Any capitalized term not defined will have the meaning assigned in the SOW or Agreement.

This SOW Change Request encompasses the following amended terms for the Services, which collectively will be defined as the "Change in Service".

2. CHANGES TO THE DESCRIPTION OF WORK

2.1. Change in Service to Scope:

Lumen will provide an additional 80 hours of Site Infrastructure Services as described in the SOW.

Project Fees

Site Services NRC	Quality of Hours	Per Hour NRC	Total NRC
Block of Hours	80	$229.00	$18,320.00

2.2. Change in Service to Project Timeline: N/A

2.3. Change in Service to Customer Responsibilities : N/A

2.4. Change in Service to Project Assumptions : N/A

2.5 This is a 1 year engagement with a 12 month Term.

3. CHANGES TO CHARGES; SERVICE TERM

3.1. Change in Service to Services Fees:

3.2. Change in Service to Expenses : N/A

3.3. Change in Service to Service Term : N/A

Any pricing quoted within this SOW Change Request is valid until 12/31/2024

4. AUTHORIZATION

This SOW Change Request will not become effective until Lumen and Customer have executed the Agreement, applicable Service Attachments, and the initial SOW. This SOW Change Request is effective on the date the last party signs it (the "effective date").

Acknowledged & Agreed:

© Lumen Technologies. All Rights Reserved.

LUMEN	City of Santa Fe - NM
Alex Khanin Alex Khanin (Oct 22, 2024 14:19 MDT)	
Authorized Signature	Authorized Signature
Alex Khanin	
Name Typed or Printed	Name Typed or Printed
Manager Offer Management	
Title	Title
Oct 22, 2024	
Date	Date

© Lumen Technologies. All Rights Reserved.

IN WITNESS WHEREOF, the parties have agreed to this Amendment/Addendum as of the date when it is executed by the parties, whichever signature occurs last.

CITY OF SANTA FE:

_____
ALAN WEBBER, MAYOR

ATTEST:

_____
GERALYN CARDENAS, INTERIM CITY CLERK

CITY ATTORNEY'S OFFICE:

Oct 21, 2024
ASSISTANT CITY ATTORNEY

APPROVED FOR FINANCES:

Emily K. Oster
_____
EMILY OSTER, FINANCE DIRECTOR

CERTIFICATE OF LIABILITY INSURANCE

DATE (MM/DD/YYYY): 06/10/2024

THIS CERTIFICATE IS ISSUED AS A MATTER OF INFORMATION ONLY AND CONFERS NO RIGHTS UPON THE CERTIFICATE HOLDER. THIS CERTIFICATE DOES NOT AFFIRMATIVELY OR NEGATIVELY AMEND, EXTEND OR ALTER THE COVERAGE AFFORDED BY THE POLICIES BELOW. THIS CERTIFICATE OF INSURANCE DOES NOT CONSTITUTE A CONTRACT BETWEEN THE ISSUING INSURER(S), AUTHORIZED REPRESENTATIVE OR PRODUCER, AND THE CERTIFICATE HOLDER.

IMPORTANT: If the certificate holder is an ADDITIONAL INSURED, the policy(ies) must have ADDITIONAL INSURED provisions or be endorsed. If SUBROGATION IS WAIVED, subject to the terms and conditions of the policy, certain policies may require an endorsement. A statement on this certificate does not confer rights to the certificate holder in lieu of such endorsement(s).

PRODUCER
MARSH USA LLC.
CA License #0437153
1301 5th Avenue, Suite 1900
Seattle, WA 98101-2682
Attn: Seattle.certrequest@marsh.com / Fax: 212-948-4326
CN102197661-STND-ALL-23-24

CONTACT NAME: ...
PHONE (A/C, No, Ext): **FAX (A/C, No):**
E-MAIL ADDRESS:

INSURER(S) AFFORDING COVERAGE	NAIC #
INSURER A : Greenwich Insurance Company	22322
INSURER B : XL Specialty Insurance Co.	37885
INSURER C : Allianz Underwriters Ins Co	36420
INSURER D :	
INSURER E :	
INSURER F :	

INSURED
Lumen Technologies, Inc.
and all subsidiaries, including but not limited to:
Qwest Corporation; Embarq Corporation; Level 3 Communications, LLC and CenturyLink Communications, LLC
100 CenturyLink Dr.
Monroe, LA 71203

COVERAGES **CERTIFICATE NUMBER:** SEA-004021389-01 **REVISION NUMBER:** 3

THIS IS TO CERTIFY THAT THE POLICIES OF INSURANCE LISTED BELOW HAVE BEEN ISSUED TO THE INSURED NAMED ABOVE FOR THE POLICY PERIOD INDICATED. NOTWITHSTANDING ANY REQUIREMENT, TERM OR CONDITION OF ANY CONTRACT OR OTHER DOCUMENT WITH RESPECT TO WHICH THIS CERTIFICATE MAY BE ISSUED OR MAY PERTAIN, THE INSURANCE AFFORDED BY THE POLICIES DESCRIBED HEREIN IS SUBJECT TO ALL THE TERMS, EXCLUSIONS AND CONDITIONS OF SUCH POLICIES. LIMITS SHOWN MAY HAVE BEEN REDUCED BY PAID CLAIMS.

INSR LTR	TYPE OF INSURANCE	ADDL INSD	SUBR WVD	POLICY NUMBER	POLICY EFF (MM/DD/YYYY)	POLICY EXP (MM/DD/YYYY)	LIMITS	
A	X **COMMERCIAL GENERAL LIABILITY** CLAIMS-MADE [X] OCCUR X CONTRACTUAL LIABILITY GEN'L AGGREGATE LIMIT APPLIES PER: X POLICY [ ] PRO-JECT [ ] LOC OTHER:	X	X	RGD500033311	09/01/2023	09/01/2024	EACH OCCURRENCE DAMAGE TO RENTED PREMISES (Ea occurrence) MED EXP (Any one person) PERSONAL & ADV INJURY GENERAL AGGREGATE PRODUCTS - COMP/OP AGG	$ 3,000,000 $ 500,000 $ 10,000 $ 3,000,000 $ 15,000,000 $ 15,000,000
A	**AUTOMOBILE LIABILITY** X ANY AUTO X OWNED AUTOS ONLY [ ] SCHEDULED AUTOS X HIRED AUTOS ONLY [X] NON-OWNED AUTOS ONLY	X	X	RAD500033411 Auto Physical Damage - Self Insured	09/01/2023	09/01/2024	COMBINED SINGLE LIMIT (Ea accident) BODILY INJURY (Per person) BODILY INJURY (Per accident) PROPERTY DAMAGE (Per accident)	$ 2,000,000 $ $ $
C	X **UMBRELLA LIAB** [X] OCCUR **EXCESS LIAB** [ ] CLAIMS-MADE DED [ ] RETENTION $	X	X	U5Z000023220	09/01/2023	09/01/2024	EACH OCCURRENCE AGGREGATE	$ 10,000,000 $ 10,000,000
B B B B	**WORKERS COMPENSATION AND EMPLOYERS' LIABILITY** ANYPROPRIETOR/PARTNER/EXECUTIVE OFFICER/MEMBER EXCLUDED? Y/N [N] **(Mandatory in NH)** If yes, describe under DESCRIPTION OF OPERATIONS below	N / A	X	RWD500032911 (AOS) RWR500033011 (WI) RWE500033111 (WA) RWE500033211 (OH)	09/01/2023 09/01/2023 09/01/2023 09/01/2023	09/01/2024 09/01/2024 09/01/2024 09/01/2024	X PER STATUTE [ ] OTH-ER E.L. EACH ACCIDENT E.L. DISEASE - EA EMPLOYEE E.L. DISEASE - POLICY LIMIT	 $ 1,000,000 $ 1,000,000 $ 1,000,000
C	Technology E&O incl. Cyber/Privacy Liability			U5Z000023220	09/01/2023	09/01/2024	Each Claim/Aggregate Retention	10,000,000 5,000,000

DESCRIPTION OF OPERATIONS / LOCATIONS / VEHICLES (ACORD 101, Additional Remarks Schedule, may be attached if more space is required)
City of Santa Fe is included as Additional Insured as respects their interest in the operations of the Named Insured as required by contract or agreement regarding General Liability, Auto Liability, and Umbrella Liability.

CERTIFICATE HOLDER

City of Santa Fe
200 Lincoln Avenue
Santa Fe, NM 87504

CANCELLATION

SHOULD ANY OF THE ABOVE DESCRIBED POLICIES BE CANCELLED BEFORE THE EXPIRATION DATE THEREOF, NOTICE WILL BE DELIVERED IN ACCORDANCE WITH THE POLICY PROVISIONS.

AUTHORIZED REPRESENTATIVE
of Marsh USA LLC

Kathleen J. Stephens

© 1988-2016 ACORD CORPORATION. All rights reserved.

ADDITIONAL REMARKS SCHEDULE

AGENCY	NAMED INSURED
MARSH USA LLC.	Lumen Technologies, Inc. and all subsidiaries, including but not limited to: Qwest Corporation; Embarq Corporation; Level 3 Communications, LLC and CenturyLink Communications, LLC 100 CenturyLink Dr. Monroe, LA 71203
POLICY NUMBER	
CARRIER / NAIC CODE	EFFECTIVE DATE:

ADDITIONAL REMARKS

THIS ADDITIONAL REMARKS FORM IS A SCHEDULE TO ACORD FORM,

FORM NUMBER: 25 **FORM TITLE:** Certificate of Liability Insurance

---------- GENERAL LIABILITY ----------

Automatic Additional Insured's Primary Coverage
Additional Insured as respects your interest in the operations of the Named Insured as required by contract or agreement.
Coverage provided by the above General Liability policy shall be primary and is limited to liability arising out of Named Insured's ownership and/or operations. Any insurance carried by the additional insured shall not be contributory insurance.
Waiver of Transfer of Rights of Recovery Against Others to Us (Waiver of Subrogation) – any person or organization with whom you have entered into a contract or agreement, or by statute, law or code of ordinance. Separation of Insureds Applies. Insurance covers incidents that occur within 50' of railroad property, any railroad exclusions have been deleted per endorsement CG2417.

---------- AUTOMOBILE LIABILITY ----------

Any person or organization you are required in a written contract, agreement, statute, law or code of ordinances provided the "bodily injury" or "property damage" occurs subsequent to the executive of the contract, agreement, statute, law or code of ordinances.
Lessor - Additional Insured and Loss Payee - All Lessors
Waiver of Transfer of Rights of Recovery Against Others to Us (Waiver of Subrogation) – Any person or organization with whom you have waived prior to the "accident" or the "loss" under a contract with that person or organization, or under statute, law or code of ordinances.

--------- WORKERS' COMPENSATION AND EMPLOYER'S LIABILITY AND EXCESS WORKERS' COMPENSATION AND EMPLOYER'S LIABILITY (OH & WA - SELF-INSURED - $1,000,000 RETENTION) ---------

Waiver of Our Right to Recover from others Endorsement – Where required by written agreement signed prior to loss, or required by statute, law or code of ordinances executed prior to loss.

---------- EXCESS/UMBRELLA ----------
Coverage applies per occurrence. Additional Insured as respects your interest in the operations of the Named Insured as required by contract or agreement. Waiver of Transfer of Rights of Recovery Against Others to Us (Waiver of Subrogation) - Any person or organization with whom you have entered into a contract or agreement, but only to the extent required by such contract or agreement. Separation of Insureds Applies.

---------- COMMERCIAL CRIME - FIDELITY BOND ----------
Carrier: XL Specialty Insurance Company
Policy Number: ELU19204423
Effective Dates: 09/01/2023 - 09/01/2024
Deductible: $2,500,000
Each Occurrence: $15,000,000

---------- U.S. PROPERTY ----------
Carrier: Allianz Underwriters Insurance Company
Policy Number: U5Z000023220
Effective Dates: 09/01/2023 - 09/01/2024
Limit: $25,000,000
Deductible: $25,000,000

Property Coverage: "All Risk" of Direct Physical Loss or Damage to All Real and Personal Property, including Boiler & Machinery, Earthquake, Flood and Wind - Replacement Cost Basis, and Business Interruption - Actual Loss Sustained.
Loss Payee or mortgagee as required by written contract/loan agreement to the the extent of your insurable interest. Waiver of Subrogation - Any person or organization whom you have entered into a contract or agreement, but only to the extent required by such contract or agreement. Other deductibles may apply as per policy terms and conditions.

© 2008 ACORD CORPORATION. All rights reserved.
The ACORD name and logo are registered marks of ACORD

CoSF COLO move

Final Audit Report 2024-10-22

Created:	2024-10-22
By:	Casey Stone (casey.stone@insnetworks.com)
Status:	Signed
Transaction ID:	CBJCHBCAABAAufsi7kIgDLjkUg4vuaCru8HvywhnzbeX

"CoSF COLO move" History

Document created by Casey Stone (casey.stone@insnetworks.com)
2024-10-22 - 5:39:55 PM GMT- IP address: 98.60.213.51

Document emailed to pomdirectorsignature@lumen.com for signature
2024-10-22 - 5:42:42 PM GMT

Email viewed by pomdirectorsignature@lumen.com
2024-10-22 - 5:51:50 PM GMT- IP address: 155.70.52.174

Signer pomdirectorsignature@lumen.com entered name at signing as Alex Khanin
2024-10-22 - 8:19:36 PM GMT- IP address: 155.70.104.123

Document e-signed by Alex Khanin (pomdirectorsignature@lumen.com)
Signature Date: 2024-10-22 - 8:19:38 PM GMT - Time Source: server- IP address: 155.70.104.123

Agreement completed.
2024-10-22 - 8:19:38 PM GMT

SIN	MAS SIN	SubSIN	Manufacturer Name	MFR Part Number
132-52	54151ECOM	132-52.12040	Lumen	132-52.12040
132-51	54151S	QGSI-PS116	Lumen	QGSI-PS116
132-52	54151ECOM	132-52.9535	Lumen	132-52.9535
132-52	54151ECOM	132-52.9545	Lumen	132-52.9545

Product Category	Product Name / Service Proposed
WaveLengths	Wavelength Service - Metro (US)
Labor	Integration Architect Analytics—Interm.
IPVPN	IPVPN Port Gig-Ethernet (1000 Mb) (100 CDR Mbps)
IPVPN	IPVPN Port 10 GB (1000 CDR Mbps)

Product Description	Type	GSA Price with IFF	Price Effective Date
10 GigE LAN, Unprotected Wavelength, Custom or Diversely Routed, 3 Year	MRC	$ 1,632.24	2/8/2024
• 4-8 years' of experience in IT with expertise in Big Data integration. • Minimum 3 years' of experience in Big Data Analytics. • As an Integration Architect Analytics, will be responsible for integration architecture to provide solution of integrate multiple systems with various integration methodology & re-architect baseline middleware solution. • Expertise in computer-based software and / or statistical packages (e.g., SAS, SPSS, R, MATLAB, C, C++, JAVA) for developing predictive models. • BS / B Tech degree in Computer Science, related technical field preferred, or equivalent work experience. • Mutually agreed upon Statement of Work required before ordering (Professional Services)—BS / B Tech degree in Computer Science, related technical field preferred, or equivalent work experience.—4-8 years' of experience in IT with expertise in Big Data integration. Minimum 3 years' of experience in Big Data Analytics.	Hr	$ 289.98	9/1/2024
Internet Protocol Virtual Private Network (IPVPN) Port Gig-Ethernet (1000 Mb) (100 CDR Mbps)	MRC	$ 262.97	1/18/2024
Internet Protocol Virtual Private Network (IPVPN) Port 10 GB (1000 CDR Mbps)	MRC	$ 625.69	1/18/2024

Purchasing_Memo_Lumen (1)

Final Audit Report 2024-11-12

Created:	2024-11-12
By:	Kristy Miera (kamiera@santafenm.gov)
Status:	Signed
Transaction ID:	CBJCHBCAABAAd54Vro0-cJI1hS-jg-qB8BhNROBx-IAn

"Purchasing_Memo_Lumen (1)" History

Document created by Kristy Miera (kamiera@santafenm.gov)
2024-11-12 - 6:12:12 PM GMT- IP address: 63.232.20.2

Document sent to ALEXIS LOTERO (aclotero@santafenm.gov) and ajhopkins@santafenm.gov
ajhopkins@santafenm.gov (ajhopkins@santafenm.gov) for signature. One of them to sign
2024-11-12 - 6:21:05 PM GMT

Email viewed by ALEXIS LOTERO (aclotero@santafenm.gov)
2024-11-12 - 6:21:34 PM GMT- IP address: 104.47.64.254

Document e-signed by ALEXIS LOTERO (aclotero@santafenm.gov)
Signature Date: 2024-11-12 - 6:23:17 PM GMT - Time Source: server- IP address: 63.232.20.2

Agreement completed.
2024-11-12 - 6:23:17 PM GMT

Powered by Adobe Acrobat Sign

CITY OF SANTA FE

Memorandum

Date: October 7, 2024

To: Governing Body and Quality of Life Committee

From: Kyle Hibner, Assistant City Attorney

Via: Erin K. McSherry, City Attorney EM

RE: Mufflers Technical Correction

EXECUTIVE SUMMARY:
The bill would relocate sub-paragraphs A through G in Article I ("Definitions") in the Uniform Traffic Ordinance ("UTO"), Section 12-1-23.1, to Section 12-10-1.10 of Article X ("Vehicle Regulations"), "Mufflers - Prevention of Noise - Emission Control Devices". This change is technical in nature because the sub-paragraphs contain regulations for mufflers. The placement of regulations in a definitions section does not make sense and has contributed to instances of confusion.

BACKGROUND
In 2023, the Governing Body amended Section 12-1 via Ordinance 2023-2. It appears that a heading error resulted in the information being placed in Section 12-1-23.1 of Article I, "Definitions", rather than where it was intended: Section 12-10-1.10 of Article X "Mufflers- Prevention of Noise- Emission Control Devices".

ATTACHMENTS:
Bill
FIR

CITY OF SANTA FE, NEW MEXICO

BILL NO. 2024-20

INTRODUCED BY:

Councilor Signe Lindell

Councilor Pilar Faulkner

underscored material = new [~~bracketed material~~] = delete

A BILL

MAKING A TECHNICAL CORRECTION; RELOCATING SUBPARAGRAPHS A-G OF SECTION 12-1-23.1 OF ARTICLE I ("DEFINITIONS") OF EXHIBIT A, CHAPTER 24, SFCC 1987, TO SECTION 12-10-1.10 OF ARTICLE X ("VEHICLE REGULATIONS") OF THE SAME EXHIBIT.

BE IT ORDAINED BY THE GOVERNING BODY OF THE CITY OF SANTA FE:

Section 1. Section 12-1-23.1 of Article I ("Definitions") to Exhibit A of Chapter 24 (Uniform Traffic Ordinance) of SFCC 1987 (being Ord. No. 2023-2) is amended to read as follows:

12-1-23.1 FACTORY-INSTALLED EXHAUST OPTION.

"Factory-Installed Exhaust Option" means an exhaust system for a motor vehicle that is offered as an option by the manufacturer and/or dealer to the purchaser that allows the driver of the motor vehicle to adjust the sound levels of the motor vehicle's exhaust. Examples of Factory-Installed Exhaust Option include, but are not limited to, Ford's Active Valve Performance Exhaust and Porsche's Porsche Sports Exhaust.

[~~A. Every motor vehicle shall at all times be equipped with a muffler in good working order and in constant operation to prevent excessive or unusual noise, and no person shall use a muffler cutout, muffler bypass, straight-through mufflers that do not contain baffles (including but not limited to glass packs, steel packs, and straight pipes), or similar device upon a motor vehicle on a street in this municipality.~~

~~B. The muffler, emission control equipment or device, engine and power mechanism of every motor vehicle shall be so equipped and adjusted as to prevent the escape of excessive fumes or smoke.~~

~~C. Every registered gasoline-fueled motor vehicle manufactured or assembled, commencing with the 1968 models, shall at all times be equipped and maintained in good working order with the factory-installed devices and equipment or their replacements designed to prevent, reduce, or control exhaust emissions or air pollution. Such devices or equipment shall not be modified in a manner which will amplify or increase the noise emitted by the motor of such vehicle above that emitted by a muffler of the type originally installed on the vehicle.~~

~~D. The use of a factory-installed exhaust option is prohibited and violates this ordinance if the noise emitted exceeds the decibel level reading described in Section 10.2-9.~~

~~E. Muffler changes or modification. No person shall sell, offer for sale, install or offer to install, modify or change the exhaust muffler, intake muffler, or any other noise abatement device of a motor vehicle in a way that increases or tends to increase the exhaust fumes, smoke, or noise from a motor vehicle. Such prohibited changes or modifications shall include, but not be limited to cut-outs, by-passes, and straight-through mufflers that do not contain baffles (including but not limited to glass packs, steel packs, and straight pipes).~~

~~F. For a first offense under paragraphs A, B, or C above, a person shall not be convicted if repairs are affected on the motor vehicle and the vehicle passes a compliance test within ninety (90) days of the citation being issued.~~

~~G. The city manager or the city manager's designee shall prescribe the compliance test based on the decibel levels identified as excessive in Section 10.2-9. A person cited under this section may rely on measured decibel levels from the compliance test as an affirmative defense in challenging a citation. (Ord. No. 2023-2 , § 1)~~]

Section 2. Section 12-10-1.10 of Article X ("VEHICLE REGULATIONS") of Exhibit A of Chapter 24 (Uniform Traffic Ordinance) of SFCC 1987 is amended to read as follows:

12-10-1.10 - MUFFLERS—PREVENTION OF NOISE—EMISSION CONTROL DEVICES.

A. Every motor vehicle shall at all times be equipped with a muffler in good working order and in constant operation to prevent excessive or unusual noise, and no person shall use a muffler cutout, muffler bypass, straight-through mufflers that do not contain baffles (including but not limited to glass packs, steel packs, and straight pipes), or similar device upon a motor vehicle on a street in this municipality.

B. The muffler, emission control equipment or device, engine and power mechanism of every motor vehicle shall be so equipped and adjusted as to prevent the escape of excessive fumes or smoke.

C. Every registered gasoline-fueled motor vehicle manufactured or assembled, commencing with the 1968 models, shall at all times be equipped and maintained in good working order with the factory-installed devices and equipment or their replacements designed to prevent, reduce, or control exhaust emissions or air pollution. Such devices or equipment shall not be modified in a manner which will amplify or increase the noise emitted by the motor of such vehicle above that emitted by a muffler of the type originally installed on the vehicle. (66-3-844 NMSA 1978)

D. The use of a factory-installed exhaust option is prohibited and violates this

ordinance if the noise-emitted exceeds the decibel level reading described in Section 10.2-9.

E. Muffler changes or modification. No person shall sell, offer for sale, install or offer to install, modify or change the exhaust muffler, intake muffler, or any other noise abatement device of a motor vehicle in a way that increases or tends to increase the exhaust fumes, smoke, or noise from a motor vehicle. Such prohibited changes or modifications shall include, but not be limited to cut-outs, by-passes, and straight-through mufflers that do not contain baffles (including but not limited to glass packs, steel packs, and straight pipes).

F. For a first offense under paragraphs A, B, or C above, a person shall not be convicted if repairs are affected on the motor vehicle and the vehicle passes a compliance test within ninety (90) days of the citation being issued.

G. The city manager or the city manager's designee shall prescribe the compliance test based on the decibel levels identified as excessive in Section 10.2-9. A person cited under this section may rely on measured decibel levels from the compliance test as an affirmative defense in challenging a citation. *

PASSED, APPROVED, and ADOPTED this _____day of _____, 2024.

APPROVED AS TO FORM:

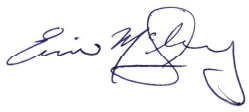

_____

ERIN K. McSHERRY, CITY ATTORNEY

Legislation/2024/Bills/2024)/Technical Amendment Muffler Noise Violation

FIR No. 10623.1

FISCAL IMPACT REPORT

General Information:

(Check) **Bill:** X **Resolution:** _____

Short Title(s): Muffler Regulation Technical Corrections

Sponsor(s): Councilor Signe Lindell and Councilor Pilar Faulkner

Reviewing Department(s): City Attorney's Office

Staff Completing FIR: Kyle Hibner, Assistant City Attorney **Date:** 10/07/2024

Phone: (505) 955-5195

Reviewed by City Attorney: Nov 8, 2024 **Date:**

Reviewed by Finance Director: Emily K. Oster **Date:** Nov 8, 2024

Summary:
The bill would make a technical correction to Article I, "Definitions," in the Uniform Traffic Ordinance ("UTO"), Section 12-1-23.1, to relocate sub-paragraphs A through G and relocate them in Section 12-10-1.20, of Article X, "Mufflers – Prevention of Noise – Emission Control Devices", which contains regulations for mufflers. Paragraphs A through G are regulatory in nature, and they do not contain definitions. Their placement in a section devoted to definitions has caused confusion.

Departments Affected:
City Attorney's Office (Prosecutor), Community Health and Safety Department (Santa Fe Police Department), and Municipal Court.

Consequences of Not Enacting Legislation:
If this legislation is not adopted, then sub-paragraphs A though G which outline rules regarding mufflers, would remain in the "Definitions" in Section 12-1-23.1 of Article I.

Conflict, Duplication, Companionship, or Relationship to Other Legislation:
None Identified.

Performance and Administrative Implications:
None Identified.

Fiscal Implications:
None Identified.

Fiscal Impact

_____X_____ Check here if no fiscal impact

Expenditures

Expenditure Type	FYE 2025	FYE 2026	FYE 2027	Require BAR (Y/N)	Recurring (R) or Non-recurring (NR)	Fund	3-Year Total Cost
Personnel and Benefits*	$	$	$				
Capital Outlay	$	$	$				
Contractual/ Professional Services	$	$	$				
Operating	$	$	$				$
Total:	$	$	$				$

Expenditure Narrative:

Revenue

Revenue Type	FYE 2025	FYE 2026	FYE 2027	Recurring (R) or Non-recurring (NR)	Fund
General Fund	$	$	$		
Special Revenue	$	$	$		
CIP	$	$	$		
Enterprise	$	$	$		
Internal Service	$	$	$		
Trust and Agency	$	$	$		
Federal	$	$	$		
Other	$	$	$		
Total	$	$	$		

Revenue Narrative:

Signature:

Email: kjhibner@santafenm.gov

CITY OF SANTA FE

Memorandum

Date: June 25, 2024

To: Governing Body, Quality of Life Committee

From: Kyle Hibner, Assistant City Attorney

Via: Erin McSherry, City Attorney EM

RE: Change Fee Schedule for Muffler Noise Violation

EXECUTIVE SUMMARY:

The proposed bill would amend Schedule A of Exhibit A to Chapter 24, SFCC 1987, the Uniform Traffic Ordinance ("UTO"), to increase the penalties for first-time offenses of muffler noise violations, described in Section 12-10-1.10, from one-hundred dollars ($100.00) to five-hundred dollars ($500.00). The bill would also eliminate the concept of a graduated penalty scale, which currently employs a "2nd Offense" category resulting in a two-hundred fifty-dollar ($250.00) fine and after that, a "Subsequent Offenses" category resulting in a five-hundred-dollar ($500.00) fee. Instead, the bill proposes to eliminate the "Second Offense" category altogether and implement a five-hundred-dollar ($500.00) fee for any Muffler Noise Penalty Ordinance offenses after the first violation.

ATTACHMENTS:
Bill
FIR

CITY OF SANTA FE, NEW MEXICO

BILL NO. 2024-13

INTRODUCED BY:

Councilor Signe Lindell

Councilor Pilar Faulkner

underscored material = new [~~bracketed material~~] = delete

A BILL

AMENDING SCHEDULE A OF THE UNIFORM TRAFFIC ORDINANCE TO INCREASE PENALTIES FOR MUFFLER NOISE VIOLATIONS, ELIMINATE A DISTINCTION BETWEEN THE CATEGORIES "SECOND OFFENSE" AND "SUBSEQUENT VIOLATIONS", RECOGNIZE COMMUNITY SERVICE IS AN ALTERNATIVE TO ALL TRAFFIC VIOLATION PENALTIES UNDER THE CITY'S GENERAL PENALTY, AND ESTABLISH AN EFFECTIVE DATE.

BE IT ORDAINED BY THE GOVERNING BODY OF THE CITY OF SANTA FE:

Section 1. Schedule A of Exhibit A of Chapter 24 (Uniform Traffic Ordinance) of SFCC 1987 (being Ord. No. 2023-2, as amended) is amended to read:

SCHEDULE A - TRAFFIC VIOLATION PENALTY ASSESSMENT SCHEDULE

ADOPTED: July 12, 2006 – Ord. No. 2006-24

AMENDED: March 25, 2009 – Ord. No. 2009-11

February 10, 2010 – Ord. No. 2010-2

June 29, 2011 – Ord. No. 2011-23

August 13, 2014 – Ord. No. 2014-26

February 24, 2021 – Ord. No. 2021-2

July 13, 2022 - Ord. No. 2022-11

January 25, 2023 - Ord. No. 2023-2

July 17, 2024 - Ord. No. 2024-4

SECTION 1.

This Exhibit may be cited as the city of Santa Fe traffic violation penalty assessment schedule for violations of the city of Santa Fe Uniform Traffic Code except those violations relating to parking which are set forth as Schedule B of the city of Santa Fe Uniform Traffic Code.

SECTION 2.

"Penalty assessment misdemeanor" means violation of the following listed sections of the city of Santa Fe Uniform Traffic Code for which the listed penalty assessment is established. The term "penalty assessment misdemeanor" does not include any violation which has caused or contributed to the cause of an accident resulting in injury or death to any person. When an alleged violator of a penalty assessment misdemeanor elects to accept a notice to appear in lieu of a notice of penalty assessment, the fine imposed upon late conviction shall not exceed the penalty assessment established for the particular penalty assessment misdemeanor and probation imposed upon a suspended or deferred sentence may include community service as contemplated in Section 1-3.1 and shall not exceed ninety days. (Ord. No. 2021-2, § 24)

[REMAINDER OF PAGE LEFT BLANK INTENTIONALLY]

COMMON NAME OF OFFENSE	SECTION VIOLATED	PENALTY ASSESSMENT
Obedience To Traffic-Control Devices/Failure To Stop	12-5-3	$25.00
Red Light	12-5-6	$25.00
Pedestrian Controls	12-5-7	$25.00
Flashing Signals	12-5-8	$25.00
Display of Unauthorized Signs, Signals, or Markings	12-5-10	$25.00
Basic (Speeding) Rule	12-6-1.1	$25.00
Speed Limits	12-6-1.2	
A. The following apply outside a school zone:		
Up to and including 10 miles an hour over speed limit		$15.00
From 11 up to and including 15 miles an hour over speed limit		$30.00
From 16 up to and including 20 miles an hour over speed limit		$65.00
From 21 up to and including 25 miles an hour over speed limit		$100.00
From 26 up to and including 30 miles an hour over the speed limit		$125.00
From 31 up to and including 35 miles an hour over the speed limit		$150.00
More than 35 miles an hour over the speed limit		$200.00

B. In a school zone	12-6-1.2A	$171.00
C. In a construction zone: The penalty assessment for speeding in violation of Section 12-6-1.2 (4) of the city of Santa Fe traffic ordinance is twice the penalty assessment established in subsection A above for the equivalent miles per hour over the speed limit		
D. In a pedestrian zone. The penalty assessment for speeding in violation of the posted speed limit in a designated pedestrian zone is twice the penalty assessment established in subsection A. above for the equivalent miles per hour over the speed limit.		
Minimum Speed Regulations	12-6-1.5	$25.00
Driving On Right Side Of Street	12-6-2.1	$25.00
Overtaking A Vehicle On The Left	12-6-2.3	$25.00
Limitations On Overtaking On The Left	12-6-2.4	$25.00
Overtaking A Vehicle On The Right	12-6-2.6	$25.00
No Passing Zones/Restrictions On Passing	12-6-2.7	$25.00
Streets Laned For Traffic	12-6-2.12	$25.00
Following Too Closely	12-6-2.13	$25.00
Driving On Divided Streets	12-6-2.14	$25.00
Driving Vehicle On Or Across Bicycle Lane Or Path.	12-6-2.17	$25.00
Turning Left At Intersection	12-6-4.2	$25.00
Entering Stop/Yield Intersection/Failure To Yield	12-6-4.3	$25.00

Required Position/Method of Turning/Improper Turn	12-6-5.1	$25.00
Obedience To No-Turn Signs	12-6-5.4	$25.00
Limitations On Turning Around/Illegal U-Turn	12-6-5.5	$25.00
Starting A Parked Vehicle	12-6-5.7	$25.00
Turn/Stop Movements	12-6-5.8	$25.00
Failure To Signal	12-6-5.9	$25.00
Motorist Turning Across Bicycle Lane.	12-6-5.11	$25.00
Stopping, Standing & Parking	12-6-6	See [~~Exhibit~~] <u>Schedule</u> B
Special Stops Required	12-6-7 (Excluding 12-6-7.3, 12-6-7.4, 12-6-7.5 and 12-6-7.7)	$25.00
Stopping For School Bus	12-6-7.3	$100.00
Failure To Stop At Railroad Crossing	12-6-7.5 and 12-6-7.7	$150.00
Operators and Chauffeurs Must Be Licensed	12-6-12.5	$25.00
Driving While License Suspended/Administratively Suspended	12-6-12.6 and 12-6-12.6A	$25.00
Driving While License Revoked	12-6-12.6B	$300-$500
Unattended Motor Vehicle	12-6-12.8	$25.00
Limitations On Backing	12-6-12.9	$25.00

Restriction On Use of Video In Motor Vehicles	12-6-12.11	$25.00
Coasting Prohibited	12-6-12.12	$25.00
Prohibited Activities While Driving (including handheld mobile communication device use)	12-6-12.18	$200.00
Mobile communication device use while driving in a school zone	12-6-12.18	$300.00
Permitting Unauthorized Persons To Drive	12-6-12.23	$25.00
Destructive Material On Roadway/Failure To Secure Load	12-6-13.5	$100.00
Improper Opening Of Doors	12-6-13.8	$25.00
Child Restraint Device Or Safety Belt	12-6-13.12	$100.00
Mandatory Use Of Seat Belts	12-6-13.13	$100.00
Open Container, 1st Offense	12-6-13.14	$100.00
for subsequent violations		mandatory court appearance
Littering	12-6-13.15	$300.00
Jaywalking	12-6-14.1 through 12-6-14.8	$25.00
Windshield	12-10-1.12	$25.00
When Lighted Lamps Are Required	12-10-1.3	$25.00
Headlamps On Vehicles	12-10-1.5	$25.00
Dimming Of Lights	12-10-1.6	$25.00

Tail Lamps	12-10-1.7, except 12-10-1.7C	$25.00
Plate Light Required	12-10-1.7C.	$10.00
Stop Lamps/Brake Lamps	12-10-1.9	$25.00
Mufflers, Prevention of Noise	12-10-1.10	[~~$100.00~~] $500.00
[~~Mufflers, Prevention of Noise, 1st Offense~~	~~12-10-1.10~~	~~$100.00~~
~~2nd Offense~~		~~$250.00~~
~~for subsequent offenses~~		~~$500.00~~]
Lamp or Flag On Projection Load	12-10-1.11	$25.00
Windshield Must Be Unobstructed and Equipped with Wipers and Windows Must Be Transparent	12-10-1.12	$25.00
Tinted Windows	12-10-1.12A	$25.00
Unsafe Equipment (Brakes)	12-10-1.16	$25.00
Display of Current Valid Registration Plate	12-10-4	$25.00

Section 4. Effective Date.

This ordinance shall go into effect ninety (90) days after adoption.

PASSED, APPROVED, and ADOPTED this _____day of _____, 2024.

APPROVED AS TO FORM:



_____

ERIN K. McSHERRY, CITY ATTORNEY

Legislation/2024/Bills/2024)/Change Fee Schedule for Muffler Noise Violation

FIR No. 10607.1

FISCAL IMPACT REPORT

General Information:

(Check) **Bill:** X **Resolution:** _____

Short Title(s): Change Fee Schedule for Muffler Noise Violation

Sponsor(s): Councilor Signe Lindell

Reviewing Department(s): City or Santa Fe Police Department

Staff Completing FIR: Kyle Hibner, Assistant City Attorney **Date:** 8/15/2024

Phone: (505) 955-5195

Reviewed by City Attorney: _____ **Date:** Nov 8, 2024

Reviewed by Finance Director: Emily K. Oster **Date:** Nov 8, 2024

Summary:
The proposed bill would amend Schedule A of Exhibit A to Chapter 24 of the City's Code, the Uniform Traffic Ordinance, to increase the penalties described in 12-10-1.10 for first time offenses of muffler noise violations from $100.00 to $500.00. The bill would also eliminate the current gradual scale which increases fine amounts for successive penalties and instead would implement a $500.00 fee for any offense of the Muffler Noise Penalty ordinance.

Departments Affected:
Santa Fe Police Department and Municipal Court.

Consequences of Not Enacting Legislation:
If this legislation is not adopted, the City will continue to impose the current fines for noise violations.

Conflict, Duplication, Companionship, or Relationship to Other Legislation:
Bill No. 2024-20 makes technical corrections to Section 12-10-1.10.

Performance and Administrative Implications:
None identified.

Fiscal Implications:
***According to data provided by the Santa Fe Municipal Court ("SFMC"), from April 2023 through September 2024, the Santa Fe Police Department issued 206 citations for muffler violations. The SFMC's judges (elected and pro tem) found defendants guilty in 114 of the 206 citations. In 38 muffler violation cases, the judges imposed a fine. In 2 of those 38 cases, the judges imposed a fine of $250, and in one case the judge imposed a $500 fine. For the 17 months of data, the monthly average number of cases in which judges imposed a fine is approximately 2.25 cases a month. Therefore, in a calendar year, the number of

cases in which the judge fines the defendant is approximately 27 cases, or $13,500 in fines. However, it is difficult to predict the number of violations for future years and if the court would impose a fine or defer the sentence or impose community service.

Fiscal Impact

***See above Check here if no fiscal impact

Expenditures

Expenditure Type	FYE __	FYE __	FYE __	Require BAR (Y/N)	Recurring (R) or Non-recurring (NR)	Fund	3-Year Total Cost
Personnel and Benefits*	$	$	$				
Capital Outlay	$	$	$				
Contractual/ Professional Services	$	$	$				
Operating	$	$	$				$
Total:	$	$	$				$

* This includes all staff time associated with executing the job functions of the proposed legislation.

Expenditure Narrative:

Revenue

Revenue Type	FYE __	FYE __	FYE __	Recurring (R) or Non-recurring (NR)	Fund
General Fund	$	$	$		
Special Revenue	$	$	$		
CIP	$	$	$		
Enterprise	$	$	$		
Internal Service	$	$	$		
Trust and Agency	$	$	$		
Federal	$	$	$		
Other	$	$	$		
Total	$	$	$		

Revenue Narrative:

*****See Fiscal Implications narrative.**

Signature:

Email: kjhibner@santafenm.gov

CITY OF SANTA FE

Memorandum

Date: November 4, 2024

To: Governing Body, Public Works and Utilities Committee, Finance Committee

From: Sean Moody, Public Works Capital Projects Manager

Via: Regina Wheeler, Public Works Department Director

RE: Authorizing Signatories for New Mexico Environment Department Grant Agreement – Grant Agreement Number SAP 22-G2419-STB

EXECUTIVE SUMMARY:

The Resolution designates a project contact and signature authority for the agreement and request for payment forms for Grant Agreement Number SAP 22-G2419-STB with the New Mexico Environment Department ("NMED"). The Grant Agreement makes available four hundred thousand dollars ($400,000.00) appropriated by the State of New Mexico Legislature to plan, design, and construct improvements on Jemez Road, including a sewer line south of Airport Road, to improve residential septic systems in the city of Santa Fe.

BACKGROUND:

The New Mexico Environment Department, through Article X. B. (v) of Grant Agreement Number SAP 22-G2419-STB, requires the City of Santa Fe, as the grantee, to agree that the Governing Body has duly adopted, as an official act, a resolution, motion, or similar action in order to receive the grant funding. Additionally, Article III of the agreement states that the resolution will identify who will act as the contact and signatory for request for payment forms related to the agreement. Adoption of this Resolution will satisfy this requirement, allowing the City to enter into the grant agreement.

ATTACHMENTS:
Resolution
FIR

CITY OF SANTA FE, NEW MEXICO

RESOLUTION NO. 2024-__

INTRODUCED BY:

Councilor Amanda Chavez

A RESOLUTION

ASSIGNING AUTHORIZED OFFICERS AND AGENTS FOR GRANT AGREEMENT NUMBER SAP 22-G2419-STB FOR THE PLAN, DESIGN, AND CONSTRUCTION OF IMPROVEMENTS ON JEMEZ ROAD.

WHEREAS, in the Laws of 2022, Chapter 52, Section 22, Subsection 118, the Legislature made an appropriation to the New Mexico Environment Department ("NMED"), funds from which NMED is making available to the City of Santa Fe ("Grantee") through Grant Agreement, number SAP 22-G2419-STB ("Agreement"), incorporated as Attachment A, in the amount of four hundred thousand dollars ($400,000), to plan, design, and construct improvements on Jemez Road, including a sewer line south of Airport Road, to improve residential septic systems in the city of Santa Fe, in Santa Fe County; and

WHEREAS, Article X.B.(v) of the Agreement states that, the "Grantee's governing body has duly adopted or passed as an official act a resolution, motion or similar action authorizing the person identified as the official representative of the Grantee to sign the Agreement and to sign Requests for Payment" and as is described in Article III of the agreement (Attachment A), the

signatories identified in the resolution "will be the contact and signatory for all disbursements and Notices of Obligation".

NOW, THEREFORE, BE IT RESOLVED BY THE GOVERNING BODY OF THE CITY OF SANTA FE that,

1) Alan Webber, Mayor, or successor(s) is the City's official authorized to sign the Agreement for this Project once approved by the Governing Body of the City of Santa Fe;
2) Stan Holland, Wastewater Division Engineer, or successor(s), is the Official Representative who is authorized to sign all other documents necessary to fulfill the Agreement and the requirements (Disbursements and Notices of Obligation) and to act as the Project contact;
3) Felicity Fonseca, Community Development Director, North Central New Mexico Economic Development District or successor(s) is the Fiscal Agent who is authorized to sign Disbursements.

PASSED, APPROVED, and ADOPTED this _____day of _____, 2024.

_____

ALAN WEBBER, MAYOR

ATTEST:

_____

GERALYN F. CARDENAS, INTERIM CITY CLERK

APPROVED AS TO FORM:



_____

ERIN K. McSHERRY, CITY ATTORNEY

STATE OF NEW MEXICO
DEPARTMENT OF ENVIRONMENT
FUND CAPITAL APPROPRIATION PROJECT
JEMEZ RD CONSTRUCT
SAP 22-G2419-STB

THIS AGREEMENT between the New Mexico Environment Department hereinafter called the "Department" or NMED, and City of Santa Fe, hereinafter called the "Grantee" becomes effective on the date signed by the NMED.

RECITALS

WHEREAS, in the Laws of 2022, Chapter 53, Section 22, Subsection 118, the Legislature made an appropriation to the Department, funds from which the Department is making available to the Grantee pursuant to this Agreement; and

WHEREAS, the Department is granting to Grantee, and the Grantee is accepting the grant of, funds from this appropriation, in accordance with the terms and conditions of this Agreement; and

WHEREAS, NMED is empowered pursuant to Section 74-1-6 B, NMSA 1978 to contract in its own name.

AGREEMENT

NOW, THEREFORE, in consideration of the mutual covenants and obligations contained herein, the parties hereby mutually agree as follows:

ARTICLE I. PROJECT DESCRIPTION, AMOUNT OF GRANT AND REVERSION DATE

A. The project that is the subject of this Agreement is described as follows:

SAP 22-G2419-STB $400,000.00 APPROPRIATION REVERSION DATE: June 30, 2026

Laws of 2022, Chapter 53, Section 22, Subsection 118, Four Hundred Thousand Dollars, ($400,000.00), for:

to plan, design and construct improvements on Jemez road, including a sewer line south of Airport road, to improve residential septic systems in Santa Fe in Santa Fe county

The Grantee's total reimbursements shall not exceed Four Hundred Thousand Dollars, $400,000.00 (the "Appropriation Amount") minus the allocation for Art in Public Places ("AIPP amount")[1], if applicable, No Dollars, $0.00, which equals Four Hundred Thousand Dollars, $400,000.00 (the "Adjusted Appropriation Amount").

[1] The AIPP amount is "an amount of money equal to one percent or two hundred thousand dollars ($200,000), whichever is less, of the amount of money appropriated for new construction or any major renovation exceeding one hundred thousand dollars ($100,000)." Section 13-4A-4 NMSA 1978.

In the event of a conflict among the Appropriation Amount, the Reversion Date, as defined herein and/or the purpose of the Project, as set forth in this Agreement, and the corresponding appropriation language in the laws cited above in this Article I(A), the language of the laws cited herein shall control.

This project is referred to throughout the remainder of this Agreement as the "Project"; the information contained in Article I(A) is referred to collectively throughout the remainder of this Agreement as the "Project Description." The Special Conditions Attachment may set forth additional or more stringent requirements and conditions, which are incorporated by this reference as if set forth fully herein. If the Special Conditions Attachment imposes more stringent requirements than any requirement set forth in this Agreement, the more stringent requirements of the Attachment shall prevail, in the event of irreconcilable conflict. The Grantee shall reference the Project's number in all correspondence with and submissions to the Department concerning the Project, including, but not limited to, Requests for Payment and reports.

ARTICLE II. LIMITATION ON DEPARTMENT'S OBLIGATION TO MAKE GRANT DISBURSEMENT TO GRANTEE

A. Upon the Effective Date of this Agreement, for permissible purposes within the scope of the Project Description, the Grantee shall only be reimbursed monies for which the Department has issued and the Grantee has received a Notice of Department's Obligation to Reimburse[2] Grantee (hereinafter referred to as "Notice of Obligation"). This Grant Agreement and the disbursement of any and all amounts of the above referenced Adjusted Appropriation Amount are expressly conditioned upon the following:

(i) Irrespective of any Notice of Obligation, the Grantee's expenditures shall be made on or before the Reversion Date and, if applicable, an Early Termination Date (i.e., the goods have been delivered and accepted or the title to the goods has been transferred to the Grantee and/or the services have been rendered for the Grantee); and

(ii) The total amount received by the Grantee shall not exceed the lesser of: (a) the Adjusted Appropriation Amount identified in Article I(A) herein or (b) the total of all amounts stated in the Notice(s) of Obligation evidencing that the Department has received and accepted the Grantee's Third Party Obligation(s), as defined in subparagraph iii of this Article II(A); and

(iii) The Grantee's expenditures were made pursuant to the State Procurement Code and execution of binding written obligations or purchase orders with third party contractors or vendors for the provision of services, including professional services, or the purchase of tangible personal property and real property for the Project, hereinafter referred to as "Third Party Obligations"; and

(iv) The Grantee's submittal of timely Requests for Payment in accordance with the procedures set forth in Article IX of this Agreement; and

(v) In the event that capital assets acquired with Project funds are to be sold, leased, or licensed to or operated by a private entity, the sale, lease, license, or operating agreement:

   a. must be approved by the applicable oversight entity (if any) in accordance with law; or
   b. if no oversight entity is required to approve the transaction, the Department must approve the transaction as complying with law.

Prior to the sale, lease, license, or operating agreement being approved pursuant to Articles II(A)(v)(a) and II(A)(v)(b) herein, the Department may, in its sole and absolute discretion and unless inconsistent with State Board of Finance imposed conditions, reimburse the Grantee for necessary expenditures

[2] "Reimburse" as used throughout this Agreement includes Department payments to the Grantee for invoices received, but not yet paid, by the Grantee from a third party contractor or vendor, if the invoices comply with the provisions of this Agreement and are a valid liability of the Grantee.

incurred to develop the Project sufficiently to make the sale, lease, license, or operating agreement commercially feasible, such as plan and design expenditures; and

(vi) The Grantee's submission of documentation of all Third-Party Obligations and amendments thereto (including terminations) to the Department and the Department's issuance and the Grantee's receiving of a Notice of Obligation for a particular amount in accordance with the terms of this Agreement shall be governed by the following:

a. The Grantee shall submit to the Department one copy of all Third-Party Obligations and amendments thereto (including terminations) as soon as possible after execution by the Third Party **but prior to execution by the Grantee.**

b. Grantee acknowledges and agrees that if it chooses to enter into a Third-Party Obligation prior to receiving a Notice of Obligation that covers the expenditure, it is solely responsible for such obligations.

c. The Department may, in its sole and absolute discretion, issue to Grantee a Notice of Obligation for the particular amount of that Third Party Obligation that only obligates the Department to reimburse Grantee's expenditures made on or before the Reversion Date or an Early Termination Date. The current Notice of Obligation form is attached to this Agreement as Exhibit 2.

d. The date the Department signs the Notice of Obligation is the date that the Department's Notice of Obligation is effective. After that date, the Grantee is authorized to budget the particular amount set forth in the Notice of Obligation, execute the Third-Party Obligation and request the Third Party to begin work. Payment for any work performed or goods received prior to the effective date of the Notice of Obligation is wholly and solely the obligation of the Grantee.

B. The Grantee shall implement, in all respects, the Project. The Grantee shall provide all necessary qualified personnel, material, and facilities to implement the Project. The Grantee shall finance its share (if any) of the costs of the Project, including all Project overruns.

C. Project funds shall not be used for purposes other than those specified in the Project Description.

D. Unless specifically allowed by law, Project funds cannot be used to reimburse Grantee for indirect Project costs.

ARTICLE III. NOTICE PROVISIONS AND GRANTEE AND DEPARTMENT DESIGNATED REPRESENTATIVES

Whenever written notices, including written decisions, are to be given or received, related to this Agreement, the following provisions shall apply.

For all matters related to this Agreement, the Grantee designates their official representative(s) or successor, in their Signatory Resolution, as required in Article X. B. (v). The official representative will be the contact and signatory for all disbursements and Notices of Obligation.

If applicable, the Grantee designates an Alternative Fiscal Agent in the Signatory Resolution as required in Article X. B. (v), and in the Alternative

The Department designates the persons listed below, or their successors, as the Points of Contact for matters related to this Agreement.

NMED Program Administrator
Name: Paulette Ortiz
Email: paulette.ortiz@env.nm.gov
Telephone: 505-670-3583

NMED Project Manager
Name: Stephanie DuBois
Email: stephanie.dubois@env.nm.gov
Telephone: 505-222-9568

The Grantee and the Department agree that either party shall send all notices, including written decisions, related to this Agreement to the above named persons by email or regular mail. In the case of mailings, notices shall be deemed to have been given and received upon the date of the receiving party's actual receipt or five calendar days after mailing, whichever shall first occur. In the case of email transmissions, the notice shall be deemed to have been given and received on the date reflected on the delivery receipt of email.

ARTICLE IV. REVERSION DATE, TERM, DEADLINE TO EXPEND FUNDS

A. As referenced in Article I(A), the applicable law establishes a date by which Project funds must be expended by Grantee, which is referred to throughout the remainder of this Agreement as the "Reversion Date." Upon being duly executed by both parties, this Agreement shall be effective as of the date of execution by the Department. It shall terminate on June 30, 2026 the Reversion Date unless Terminated Before Reversion Date ("Early Termination") pursuant to Article V herein.

B. The Project's funds must be expended on or before the Reversion Date and, if applicable, Early Termination Date of this Agreement. For purposes of this Agreement, it is not sufficient for the Grantee to encumber the Project funds on its books on or before the Project's Reversion Date or Early Termination Date. Funds are expended and an expenditure has occurred as of the date that a particular quantity of goods are delivered to and received by the Grantee or title to the goods is transferred to the Grantee and/or as of the date particular services are rendered for the Grantee. Funds are ***not*** expended and an expenditure has ***not*** occurred as of the date they are encumbered by the Grantee pursuant to a contract or purchase order with a third party.

ARTICLE V. EARLY TERMINATION

A. Early Termination Before Reversion Date Due to Completion of the Project or Complete Expenditure of the Adjusted Appropriation or Violation of this Agreement

Early Termination includes:

(i) Termination due to completion of the Project before the Reversion Date; or
(ii) Termination due to complete expenditure of the Adjusted Appropriation Amount before the Reversion Date; or
(iii) Termination for violation of the terms of this Agreement; or
(iv) Termination for suspected mishandling of public funds, including but not limited to, fraud, waste, abuse, and conflicts of interest.

Either the Department or the Grantee may early terminate this Agreement prior to the Reversion Date by providing the other party with a minimum of fifteen (15) days' advance, written notice of early termination. Grantee hereby waives any rights to assert an impairment of contract claim against the Department or the State of New Mexico in the event of Early Termination of this Agreement by the Department pursuant to Article V(A).

B. Early Termination Before Reversion Date Due to Non-appropriation

The terms of this Agreement are expressly made contingent upon sufficient appropriations and authorization being made by the Legislature of New Mexico for the performance of this Agreement. Throughout this Agreement the term "non-appropriate" or "non-appropriation" includes the following actions by the New Mexico Legislature: deauthorization, reauthorization or revocation of a prior authorization. The Legislature may choose to non-appropriate the Appropriation referred to in Article I and, if that occurs, the Department shall early terminate this Agreement for non-appropriation by giving the Grantee written notice of such termination, and such termination shall be effective as of the effective date of the law making the non-appropriation. The Department's decision as to whether sufficient appropriations or authorizations are available shall be accepted by the Grantee and shall be final. Grantee hereby waives any rights to assert an impairment of contract claim against the Department or the State of New Mexico in the event of Early Termination of this Agreement by the Department pursuant to Article V(B).

C. Limitation on Department's Obligation to Make Grant Disbursements to Grantee in the Event of Early Termination

In the event of Early Termination of this Agreement by either party, the Department's sole and absolute obligation to reimburse the Grantee is expressly conditioned upon the limitations set forth Article II.

ARTICLE VI. SUSPENSION OF NEW OR FURTHER OBLIGATIONS

A. The Department may choose, in its sole and absolute discretion, to provide written notice to the Grantee to suspend entering into new and further obligations. Upon the receipt of such written notice by the Grantee:

(i) The Grantee shall immediately suspend entering into new or further written obligations with third parties; and

(ii) The Department will suspend the issuance of any new or further Notice of Obligation under this Agreement; and

(iii) The Department may direct the Grantee to implement a corrective action plan in accordance with Article VI(D) herein.

B. In the event of Suspension of this Agreement, the Department's sole and absolute obligation to reimburse the Grantee is expressly conditioned upon the limitations set forth in Article II herein.

C. A suspension of new or further obligations under this Agreement shall remain in effect unless or until the date the Grantee receives written notice given by the Department informing the Grantee that the Suspension has been lifted or that the Agreement has been Early Terminated in accordance with Article V herein. If the Suspension is lifted, the Department will consider further requests for Notice of Obligation.

D. Corrective Action Plan in the Event of Suspension

In the event that the Department chooses, in its sole and absolute discretion to direct the Grantee to suspend entering into new or further written obligations with third parties pursuant to Article VI(A), the Department may, but is not obligated to, require the Grantee to develop and implement a written corrective action plan to remedy the grounds for the Suspension. Such corrective action plan must be approved by the Department and be signed by the Grantee. Failure to sign a corrective action plan or meet the terms and deadlines set forth in the signed corrective action plan, is hereby deemed a violation of the terms of this Agreement for purposes of Early Termination, Article V(A)(iii). The corrective action plan is in addition to, and not in lieu of, any other equitable or legal remedy, including but not limited to Early Termination.

ARTICLE VII. AMENDMENT

This Agreement shall not be altered, changed, or amended except by instrument in writing duly executed by both the parties hereto.

ARTICLE VIII. REPORTS

A. Database Reporting

The Grantee shall report quarterly Project activity by entering such Project information as the Department and the Department of Finance and Administration may require, such information entered directly into a database maintained by the Department of Finance and Administration (Budget & Formulation Management System). Additionally, the Grantee shall certify on the Request for Payment form (Exhibit 1) that updates have been maintained and are current in the database. The Grantee hereby acknowledges that failure to perform and/or certify updates into the database will delay or potentially jeopardize the reimbursement of funds. The Department shall give Grantee a minimum of thirty (30) days' advance written notice of any changes to the information the Grantee is required to report.

Quarterly reports shall be due on the last day of the month that is 30 days prior to the end of the quarter following execution of this Agreement by the Department and ending during the quarter of the submission of the final request for reimbursement for the Project, or the following quarter.

B. Requests for Additional Information/Project Inspection

During the term of this Agreement and during the period of time during which the Grantee must maintain records pursuant to Article VIII, the Department may:

(i) request such additional information regarding the Project as it deems necessary; and

(ii) conduct, at reasonable times and upon reasonable notice, onsite inspections of the Project.

Grantee shall respond to such requests for additional information within a reasonable period of time, as established by the Department.

ARTICLE IX. REQUEST FOR PAYMENT PROCEDURES AND DEADLINES

A. The Grantee shall request payment by submitting a Request for Payment, in the form attached hereto as Exhibit 1. Payment requests are subject to the following procedures:

(i) The Grantee must submit a Request for Payment; and

(ii) Each Request for Payment must contain proof of payment by the Grantee or liabilities incurred by the Grantee showing that the expenditures are valid or are liabilities incurred by the Grantee in the form of actual unpaid invoices received by the Grantee for services rendered by a third party or items of tangible personal property received by the Grantee for the implementation of the Project; provided, however, that the Grantee may be reimbursed for unpaid liabilities only if the

Department, in its sole and absolute discretion, agrees to do so and in accordance with any special conditions imposed by the Department.

(iii) In cases where the Grantee is submitting a Request for Payment to the Department based upon invoices received, but not yet paid, by the Grantee from a third party contractor or vendor, if the invoices comply with the provisions of this Agreement and are a valid liability of the Grantee, the Grantee shall make payment to those contractors or vendors within five (5) business days from the date of receiving reimbursement from the Department or such shorter period of time as the Department may prescribe in writing. The Grantee is required to certify to the Department proof of payment to the third party contractor or vendor within ten (10) business days from the date of receiving reimbursement from the Department.

B. The Grantee must obligate 5% of the Adjusted Appropriation Amount within six months of acceptance of the grant agreement and must have expended no less than 85% of the Adjusted Appropriation Amount six months prior to the reversion date.

C. **Deadlines**

Requests for Payments shall be submitted by Grantee to the Department on the earlier of:

(i) Immediately as they are received by the Grantee but at a minimum thirty (30) days from when the expenditure was incurred or liability of the Grantee was ~~a~~approved as evidenced by an unpaid invoice received by the Grantee from a third party contractor or vendor; or

(ii) Twenty (20) days from date of Early Termination; or

(iii) **Twenty (20) days from the Reversion Date**.

D. The Grantee's failure to abide by the requirements set forth in Article II and Article IX herein will result in the denial of its Request for Payment or will delay the processing of Requests for Payment. The Department has the right to reject a payment request for the Project unless and until it is satisfied that the expenditures in the Request for Payment are for permissible purposes within the meaning of the Project Description and that the expenditures and the Grantee are otherwise in compliance with this Agreement, including but not limited to, compliance with the reporting requirements and the requirements set forth in Article II herein to provide Third Party Obligations and the Deadlines set forth in Article IX herein. The Department's ability to reject any Request for Payment is in addition to, and not in lieu of, any other legal or equitable remedy available to the Department due to Grantee's violation of this Agreement.

ARTICLE X. PROJECT CONDITIONS AND RESTRICTIONS; REPRESENTATIONS AND WARRANTIES

A. The following general conditions and restrictions are applicable to the Project:

(i) The Project's funds must be spent in accordance with all applicable state laws, regulations, policies, and guidelines, including, but not limited to, the State Procurement Code (or local procurement ordinance, where applicable).

(ii) The Project must be implemented in accordance with the New Mexico Public Works Minimum Wage Act, Section 13-4-10 through 13-4-17 NMSA 1978, as applicable. Every contract or project in excess of sixty thousand dollars ($60,000) that the Grantee is a party to for construction, alteration, demolition or repair or any combination of these, including painting and decorating, of public buildings, public works or public roads and that requires or involves the employment of mechanics, laborers or both shall contain a provision stating the minimum wages

and fringe benefits to be paid to various classes of laborers and mechanics, shall be based upon the wages and benefits that will be determined by the New Mexico Department of Workforce Solutions to be prevailing for the corresponding classes of laborers and mechanics employed on contract work of a similar nature in the locality. Further, every contract or project shall contain a stipulation that the contractor, subcontractor, employer or a person acting as a contractor shall pay all mechanics and laborers employed on the site of the project, unconditionally and not less often than once a week and without subsequent unlawful deduction or rebate on any account, the full amounts accrued at time of payment computed at wage rates and fringe benefit rates not less than those determined pursuant to Section 13-4-11 (B) NMSA 1978 to be the prevailing wage rates and prevailing fringe benefit rates issued for the project.

(iii) The Project may only benefit private entities in accordance with applicable law, including, but not limited to, Article IX, Section 14 of the Constitution of the State of New Mexico, the "Anti-Donation Clause."

(iv) The Grantee shall not for a period of 10 years from the date of this agreement convert any property acquired, built, renovated, repaired, designed or developed with the Project's funds to uses other than those specified in the Project Description without the Department's and the Board of Finance's express, advance, written approval, which may include a requirement to reimburse the State for the cost of the project, transfer proceeds from the disposition of property to the State, or otherwise provide consideration to the State.

(v) The Grantee shall comply with all federal and state laws, rules and regulations pertaining to equal employment opportunity. In accordance with all such laws, rules and regulations the Grantee agrees to assure that no person shall, on the grounds of race, color, national origin, sex, sexual preference, age or handicap, be excluded from employment with Grantee, be excluded from participation in the Project, be denied benefits or otherwise be subject to discrimination under, any activity performed under this Agreement. If Grantee is found to be not in compliance with these requirements during the life of this Agreement, Grantee agrees to take appropriate steps to correct any deficiencies. The Grantee's failure to implement such appropriate steps within a reasonable time constitutes grounds for terminating this Agreement.

B. The Grantee hereby represents and warrants the following:

(i) The Grantee has the legal authority to receive and expend the Project's funds.

(ii) This Agreement has been duly authorized by the Grantee, the person executing this Agreement has authority to do so, and, once executed by the Grantee, this Agreement shall constitute a binding obligation of the Grantee, enforceable according to its terms.

(iii) This Agreement and the Grantee's obligations hereunder do not conflict with any law or ordinance or resolution applicable to the Grantee, the Grantee's charter (if applicable), or any judgment or decree to which the Grantee is subject.

(iv) The Grantee has independently confirmed that the Project Description, including, but not limited to, the amount and Reversion Date, is consistent with the underlying appropriation in law.

(v) The Grantee's governing body has duly adopted or passed as an official act a resolution, motion, or similar action authorizing the person identified as the official representative of the Grantee to sign the Agreement and to sign Requests for Payment.

(vi) The Grantee shall abide by New Mexico laws regarding conflicts of interest, governmental conduct and whistleblower protection. The Grantee specifically agrees that no officer or employee of the local jurisdiction or its designees or agents, no member of the governing body, and no other public official of the locality who exercises any function or responsibility with

respect to this Grant, during their tenure or for one year thereafter, shall have any interest, direct or indirect, in any contract or subcontract, or the proceeds thereof, for work to be performed or goods to be received, pursuant to this Grant. Further, Grantee shall require all of its contractors to incorporate in all subcontracts the language set forth in this paragraph prohibiting conflicts of interest.

(vii) No funds have been paid or will be paid, by or on behalf of the Grantee, to any person for influencing or attempting to influence an officer or employee of this or any agency or body in connection with the awarding of any Third Party Obligation and that the Grantee shall require certifying language prohibiting lobbying to be included in the award documents for all subawards, including subcontracts, loans and cooperative agreements. All subrecipients shall be required to certify accordingly.

ARTICLE XI. STRICT ACCOUNTABILITY OF RECEIPTS AND DISBURSEMENTS; PROJECT RECORDS

A. The Grantee shall be strictly accountable for receipts and disbursements relating to the Project's funds. The Grantee shall follow generally accepted accounting principles, and, if feasible, maintain a separate bank account or fund with a separate organizational code, for the funds to assure separate budgeting and accounting of the funds.

B. For a period of six (6) years following the Project's completion, the Grantee shall maintain all Project related records, including, but not limited to, all financial records, requests for proposals, invitations to bid, selection and award criteria, contracts and subcontracts, advertisements, minutes of pertinent meetings, as well as records sufficient to fully account for the amount and disposition of the total funds from all sources budgeted for the Project, the purpose for which such funds were used, and such other records as the Department shall prescribe.

C. The Grantee shall make all Project records available to the Department, the Department of Finance and Administration, and the New Mexico State Auditor upon request. With respect to the funds that are the subject of this Agreement, if the State Auditor or the Department of Finance and Administration finds that any or all of these funds were improperly expended, the Grantee may be required to reimburse to the State of New Mexico, to the originating fund, any and all amounts found to be improperly expended.

ARTICLE XII. IMPROPERLY REIMBURSED FUNDS

If the Department determines that part or all of the Appropriation Amount was improperly reimbursed to Grantee, including but not limited to, Project funds reimbursed to Grantee based upon fraud, mismanagement, misrepresentation, misuse, violation of law by the Grantee, or violation of this Agreement, the Grantee shall return such funds to the Department for disposition in accordance with law.

ARTICLE XIII. LIABILITY

Neither party shall be responsible for liability incurred as a result of the other party's acts or omissions in connection with this Agreement. Any liability incurred in connection with this Agreement is subject to immunities and limitations of the New Mexico Tort Claims Act.

ARTICLE XIV. SCOPE OF AGREEMENT

This Agreement constitutes the entire and exclusive agreement between the Grantee and Department concerning the subject matter hereof. The Agreement supersedes any and all prior or contemporaneous agreements, understandings, discussions, communications, and representations, written or verbal.

ARTICLE XV. REQUIRED NON-APPROPRIATIONS CLAUSE IN CONTRACTS FUNDED IN WHOLE OR PART BY FUNDS MADE AVAILABLE UNDER THIS AGREEMENT

The Grantee acknowledges, warrants, and agrees that Grantee shall include a "non-appropriations" clause in all contracts between it and other parties that are (i) funded in whole or part by funds made available under this Agreement and (ii) entered into after the effective date of this Agreement that states:

"The terms of this Agreement are contingent upon sufficient appropriations and authorization being made by the Legislature of New Mexico for the performance of this Agreement. If sufficient appropriations and authorization are not made by the Legislature, the Santa Fe may immediately terminate this Agreement by giving Contractor written notice of such termination. The Santa Fe's decision as to whether sufficient appropriations are available shall be accepted by the Contractor and shall be final. Contractor hereby waives any rights to assert an impairment of contract claim against the Santa Fe or the New Mexico Environment Department or the State of New Mexico in the event of immediate or Early Termination of this Agreement by the Santa Fe or the Department"

ARTICLE XVI. REQUIRED TERMINATION CLAUSE IN CONTRACTS FUNDED IN WHOLE OR PART BY FUNDS MADE AVAILABLE UNDER THIS AGREEMENT

Grantee acknowledges, warrants, and agrees that Grantee shall include the following termination clause in all contracts that are (i) funded in whole or part by funds made available under this Agreement and (ii) entered into after the effective date of this Agreement:

"This contract is funded in whole or in part by funds made available under a New Mexico Environment Department Grant Agreement. Should the NMED early terminate the grant agreement, the Santa Fe may early terminate this contract by providing Contractor written notice of such termination. In the event of termination pursuant to this paragraph, the Santa Fe only liability shall be to pay Contractor for acceptable goods delivered and services rendered before the termination date."

Grantee hereby waives any rights to assert an impairment of contract claim against the Department or the State of New Mexico in the event of Early Termination of this Agreement by the Department.

ARTICLE XVII. COMPLIANCE WITH UNIFORM FUNDING CRITERIA.

A. Throughout the term of this Agreement, Grantee shall:

1. submit all reports of annual audits and agreed upon procedures required by Section 12-6-3(A)-(B) NMSA 1978 by the due dates established in 2.2.2 NMAC, reports of which must be a public record pursuant to Section 12-6-5(A) NMSA 1978 within forty-five days of delivery to the State Auditor;
2. have a duly adopted budget for the current fiscal year approved by its budgetary oversight agency (if any);

3. timely submit all required financial reports to its budgetary oversight agency (if any); and

4. have adequate accounting methods and procedures to expend grant funds in accordance with applicable law and account for and safeguard grant funds and assets acquired by grant funds.

B. In the event Grantee fails to comply with the requirements of Paragraph A of this Article XVII, the Department may take one or more of the following actions:

1. suspend new or further obligations pursuant to Article VI(A) of this Agreement;

2. require the Grantee to develop and implement a written corrective action plan pursuant to Article VI(D) of this Agreement to remedy the non-compliance;

3. impose special grant conditions to address the non-compliance by giving the Grantee notice of such special conditions in accordance with Article III of this Agreement; the special conditions shall be binding and effective on the date that notice is deemed to have been given pursuant to Article III; or

4. terminate this Agreement pursuant to Article V(A) of this Agreement.

ARTICLE XVIII.]OPTIONAL IF THE APPROPRIATION IS FUNDED BY SEVERANCE TAX BONDS OR GENERAL OBLIGATION BONDS] SEVERANCE TAX BOND AND GENERAL OBLIGATION BOND PROJECT CLAUSES

A. Grantee acknowledges and agrees that the underlying appropriation for the Project is a severance tax bond or general obligation bond appropriation, and that the associated bond proceeds are administered by the New Mexico State Board of Finance (SBOF), an entity separate and distinct from the Department. Grantee acknowledges and agrees that (i) it is Grantee's sole and absolute responsibility to determine through SBOF staff what (if any) conditions are currently imposed on the Project; (ii) the Department's failure to inform Grantee of a SBOF imposed condition does not affect the validity or enforceability of the condition; (iii) the SBOF may in the future impose further or different conditions upon the Project; (iv) all SBOF conditions are effective without amendment of this Agreement; (v) all applicable SBOF conditions must be satisfied before the SBOF will release to the Department funds subject to the condition(s); and (vi) the Department's obligation to reimburse Grantee from the Project is contingent upon the then current SBOF conditions being satisfied.

B. Grantee acknowledges and agrees that the SBOF may in its sole and absolute discretion remove a project's assigned bond proceeds if the project doesn't proceed sufficiently. Entities must comply with the requirement to encumber five percent (5%) of Project funds within six months of bond issuance as certified by the grantee in the Bond Questionnaire and Certification documents submitted to the SBOF. Failure to comply may result in the bond proceeds reassignment to a new ready project. If this should occur this grant agreement will be suspended until the entity has demonstrated readiness as determined by the SBOF and the Department.

C. Grantee acknowledges and agrees that this Agreement is subject to the SBOF's Bond Project Disbursements rule, NMAC 2.61.6, as may be amended or re-codified. The rule provides definitions and interpretations of grant language for the purpose of determining whether a particular activity is allowable under the authorizing language of the agreement.

IN WITNESS WHEREOF, the parties have duly executed this Agreement as of the date of execution by the Department.

GRANTEE

_____
Signature of Official with Authority to Bind Grantee

_____
Entity Name

By: _____
(Type or Print Name)

Its: _____
(Type or Print Title)

_____
Date

New Mexico Environment Department

_____
Judith L. Kahl, P.E., Bureau Chief, NMED Construction Programs Bureau
Signed pursuant to the March 24, 2023 Secretary of Environment Delegation Order

IN WITNESS WHEREOF, the City of Santa Fe has agreed to this Grant as of the date of the signature by the required approval authorities below.

CITY OF SANTA FE:

__See Previous Page_____

ALAN WEBBER, MAYOR

DATE: _____

ATTEST:

_____

GERALYN CARDENAS, INTERIM CITY CLERK

CITY ATTORNEY'S OFFICE:

Kevin L. Nault
Kevin L. Nault (Aug 21, 2024 13:31 MDT)

ASSISTANT CITY ATTORNEY

FINANCE:

_____

EMILY OSTER, FINANCE DIRECTOR

SAMPLE

STATE OF NEW MEXICO
CAPITAL GRANT PROJECT
Request for Payment Form
Exhibit 1

I. Grantee Information

(Make sure information is complete & accurate)

A. Grantee:

B. Address:

(Complete Mailing, including Suite, if applicable)

City State Zip

C. Phone No:

D. Grant No:

E. Project Title:

F. Grant Expiration Date:

II. Payment Computation

A. Payment Request No.

B. Grant Amount:

C. AIPP Amount *(If Applicable)*:

D. Funds Requested to Date:

E. Amount Requested this Payment:

F. Reversion Amount (If *Applicable*):

G. Grant Balance:

H. ☐ GF ☐ GOB ☐ STB (*attach wire if first draw*)

I. ☐ Final Request for Payment (*if Applicable*)

III. Fiscal Year :

(The State of NM Fiscal Year is July 1, 20XX through June 30, 20XX of the following year)

IV. ☐ **Reporting Certification:** I hereby certify to the best of my knowledge and belief, that database reporting is up to date; to include the accuracy of expenditures and grant balance, project status, project phase, achievements and milestones; and in compliance with Article VIII of the Capital Outlay Grant Agreement.

V. ☐ **Compliance Certification:** Under penalty of law, I hereby certify to the best of my knowledge and belief, the above information is correct; expenditures are properly documented, and are valid expenditures or actual receipts; and that the grant activity is in full compliance with Article IX, Sec. 14 of the New Mexico Constitution known as the "anti donation" clause.

Grantee Fiscal Officer
or **Fiscal Agent** (*if applicable*)

Printed Name

Date:

Grantee Representative

Printed Name

Date:

(State Agency Use Only)

Vendor Code: **Fund No.:** **Loc No.:**

I certify that the State Agency financial and vendor file information agree with the above submitted information.

Division Fiscal Officer Date

Division Project Manager Date

NOTICE OF OBLIGATION TO REIMBURSE GRANTEE
SAMPLE EXHIBIT 2

Notice of Obligation to Reimburse Grantee [# 1]

DATE: [_____]

TO: Department Representative: [_____,_____]
FROM: Grantee: [_____]
Grantee Official Representative: [_____]

SUBJECT: Notice of Obligation to Reimburse Grantee
Grant Number: [_____]
Grant Termination Date: [_____]

As the designated representative of the Department for Grant Agreement number [_____] entered into between Grantee and the Department, I certify that the Grantee has submitted to the Department the following third party obligation executed, in writing, by the third party's authorized representative:

Vendor or Contractor: [_____]
Third Party Obligation Amount: [_____]

Vendor or Contractor: [_____]
Third Party Obligation Amount: [_____]

Vendor or Contractor: [_____]
Third Party Obligation Amount: [_____]

I certify that the State is issuing this Notice of Obligation to Reimburse Grantee for permissible purposes within the scope of the project description, subject to all the terms and conditions of the above referenced Grant Agreement.

Grant Amount (Minus AIPP if applicable): [_____]
The Amount of this Notice of Obligation: [_____]
The Total Amount of all Previously Issued Notices of Obligation: [_____]
The Total Amount of all Notices of Obligation to Date: [_____]
Note: Contract amounts may exceed the total grant amount, but the invoices paid by the grant will not exceed the grant amount.

Department Rep. Approver: [_____]
Title: [_____]
Signature: [_____]
Date: [_____]

1 Administrative and/or Indirect Cost – generally, the legislation authorizing the issuance of bonds prohibits the use of its proceeds for indirect expenses (e.g. penalty fees or damages other than pay for work performed, attorney fees, and administrative fees). Such use of bond proceeds shall not be allowed unless specifically authorized by statute.

New Mexico Environment Department (NMED)
Capital Appropriations Certification Document
Article IX. A. (ii) and (iii)
Project JEMEZ RD CONSTRUCT SAP 22-G2419-STB
Grantee Santa Fe
Payment Request No_____

I certify that payment to all vendors on the above referenced payment request were paid no more than five (5) days after receiving reimbursement from NMED.

Official Representative, Signed Name, Printed Name, Date

TECHNICAL REQUIREMENTS
NEW MEXICO ENVIRONMENT DEPARTMENT
CAPITAL OUTLAY

ARTICLE 1 REVIEW

Upon execution of the grant agreement, the Grantee will follow the procedures listed below unless waived in writing by the New Mexico Environment Department (NMED) (payment may be withheld if any of these procedures are not followed by the Grantee).

A. The Grantee must submit copies to NMED of all executed contracts entered into by the Grantee and related to the project, for review and, if appropriate, approval. Only approved eligible expenditures incurred **after** the effective date of the Grant Agreement shall be reimbursed or paid from these funds.

B. If these grant funds are to be used for engineering and/or other professional services, the hiring process for engineering services and/or other professional services must be performed in compliance with the New Mexico Procurement Code [Sections 13-1-21 et seq. NMSA 1978]. If engineering fees exceed $60,000, excluding gross receipt taxes, the Grantee is required to contact the Professional Technical Advisory Board (PTAB) for assistance in the preparation of the Request for Proposals (RFP) package. (PTAB: phone (505) 888-6161 and e-mail ptab@acecnm.org.)

C. If these grant funds are used for engineering and/or other professional services, the Grantee must submit a copy of any executed engineering agreement and/or other professional services contract so a notice of obligation can be prepared and issued. If the Grantee's staff will be used to prepare the design, a letter certifying that must be submitted to NMED for the project record. The grantee has the option of using the NMED engineering agreement. In any case all engineering agreements must include the non-appropriation and termination clauses required by DFA in all agreements funded by capital outlay.

D. A preliminary engineering report (PER), technical memorandum, or study by a registered New Mexico Professional Engineer may be required.

E. If the grant funds are to be used for engineering design or for construction, the Grantee must submit all plans, specifications, bid documents, and engineer's construction cost estimate, for the project (prepared and sealed by a licensed and registered New Mexico Professional Engineer) to NMED **before** the project is advertised for construction bids, along with a letter **from the Grantee** stating that they have reviewed and accepted the plans and specifications. If required, the Grantee must also submit the plans and specifications to the appropriate regulatory agency for review and approval and provide a copy of the approval letter from the regulatory agency. Upon receipt of these documents the NMED will issue a letter confirming receipt of the required documents and informing the Grantee to proceed with advertising the project for construction bids.

F. A site certificate must be submitted prior to project bid advertisement that certifies all necessary easements, rights-of-way, and/or property upon or through which the project is being constructed have been obtained. The Site Certificate must be signed by an attorney, engineer, surveyor, or title abstractor.

G. If grant funds are to be used for the purchase or acquisition of real property as a part of this project and within the project period, the Grantee will submit documentation of the acquisition to NMED, including a legal description of the property, the date the property will be acquired, evidence of clear title, and an appraisal report prepared by a qualified appraiser selected through applicable procurement procedures.

H. The Grantee will submit the proof of advertisement, recommendation of award, bid tabulation, complete bid submittal of the selected contractor, any addenda issued, and funding analysis listing all funds that will pay for construction to NMED prior to award of the construction contract, along with a letter from the Grantee stating they concur with the recommendation of award to the selected contractor and price and confirming that the Grantee has sufficient funds for construction.

I. The Grantee will submit the notice of the award, the notice of a pre-construction conference, a copy of the executed construction contract documents (including payment and performance bonds), and the notice to proceed to NMED. NMED will prepare and issue the notice of obligation for the construction cost making the grant funds available for reimbursement of construction costs. The selected contractor will be required to post a performance and payment bond in accordance with requirements of Section 13-4-18 NMSA 1978.

J. The Grantee will provide a full-time construction inspector during construction of the project unless NMED determines that part time inspection is adequate for the project. This must be requested and approved by NMED prior to the start of construction.

K. All daily construction inspection reports shall be made available to the NMED upon request.

L. Notwithstanding the inspections performed by the Grantee and its engineer, NMED will have the right to examine all installations comprising the project, including materials delivered and stored on-site for use on the project. Such examinations will not be considered an inspection for compliance with contract plans but will be a general NMED review as described in Article 2 below.

M. If applicable, the Grantee (or the system owner) will employ qualified utility operators and will comply with all provisions of the New Mexico Utility Operators Certification Act, Section 61-33-1 et seq. NMSA 1978.

N. NMED will reimburse the grantee its actual costs when NMED determines, in its sole discretion, that expenditures were appropriate under the terms of the Agreement and that the expenditures were properly documented.

ARTICLE 2 NMED OVERSIGHT

NMED inspection, review and oversight is only for purposes of compliance with applicable state grant requirements, procedures, statutes, and regulations. NMED approval will not be interpreted as a warranty or guarantee of any kind. Responsibility for the design of the project will lie solely with the engineer of record. All defects and their correction will be the responsibility of the Grantee and its contractors and engineers or consultants. Any questions raised by NMED during its inspections and reviews shall be resolved exclusively by the Grantee. The Grantee and its contractors and engineers or consultants will remain responsible for the completion and success of the project. No action by NMED shall relieve the

owner, engineer, or contractor of legal responsibilities for the overall integrity of the project, adequacy of the design, safety, or compliance with all applicable regulations.

ARTICLE 3 CLOSEOUT

A. The project will not be considered complete until the work as defined in this agreement has been fully performed, and finally and unconditionally accepted by the Grantee and the engineer of record.

B. If the grant funds are used for purchase of equipment, final payment will be made after receipt of the equipment and equipment title, if applicable. Appraisal reports are required for the purchase of used equipment.

C. If the grant funds are used for construction, final payment will be made after the final inspection has been conducted by NMED and the following items, unless waived by NMED, have been provided to NMED, and have been reviewed and approved by NMED:

i. A certificate of substantial completion including punch list items.

ii. A final certified construction pay request prepared by the Grantee's project engineer and approved by the Grantee.

iii. A written consent of the surety, if any, to final payment.

iv. Complete and legally effective releases or waivers (satisfactory to the Grantee) of all liens arising out of the contract documents and the labor services performed and the materials and equipment furnished there under. In lieu thereof and as approved by the Grantee, contractor(s) may furnish receipts or releases in full; an affidavit of contractor that the releases and receipts include labor, services, materials, and equipment for which a lien could be filed and that all payrolls, material and equipment bills, and other indebtedness connected with the work for which the Grantee or its property might in any way be responsible, have been paid or otherwise satisfied.

v. Certification letter by the Grantee and contractor that the Labor Standards Contract Provisions have been met.

vi. Certification letter of project acceptance by the Grantee and the Grantee's project engineer stating that work has been satisfactorily completed and the construction contractor has fulfilled all of the obligations required under the contract documents with the Grantee, or if payment and materials performance bonds are "called", an acceptance close-out settlement to the Grantee and contractors will be submitted to NMED.

vii. Certification letter from the Grantee confirming receipt and acceptance of the record drawings and operation and maintenance manuals.

Rev. May 2023

NEW MEXICO ENVIRONMENT DEPARTMENT
CONSTRUCTION PROGRAMS BUREAU

NMED DISBURSEMENT REQUEST

SPECIAL APPROPRIATIONS PROGRAM (SAP)

A. NAME OF ENTITY

C. DISBURSEMENT REQUEST NUMBER

B. PROJECT NUMBER

D. GRANT AMOUNT

	PREVIOUS EXPENDITURES		CURRENT EXPENDITURES		CUMULATIVE		FUNDS REMAINING	
	NMED PROGRAM	OTHER FUNDS	NMED PROGRAM	OTHER FUNDS	NMED PROGRAM	OTHER FUNDS	NMED PROGRAM	OTHER FUNDS
Engineer Fees								
Other Professional								
Service Fees								
Inspection Fees								
Property Acquisition								
Construction Cost								
Planning Cost								
Equipment								
Other Costs (specify)								
Contingencies								
TOTAL								

Article IX.A. (iii). By checking this box you are stating that payment has NOT been paid to the vendors associated with this request. Upon receipt of payment from NMED, certification of payment will be sent within 10 days from the date of receiving reimbursement.		Article IX. A. (ii). By checking this box you are certifying that the vendors associated with this request have been paid.	

Certification: Under penalty of law, I certify that all the above expenditures are true and correct and are for appropriate purposes in accordance with the terms and conditions of the pertinent Loan/Grant Agreement; that all of the above expenses are properly documented, and are actual invoices; that payment has not been received; and that the grant activity is in full compliance with Article IX, Sec. 14 of the New Mexico Constitution known as the "anti-donation" clause.

Signature of Official Representative:	Typed or Printed Name:	Phone:	Date:
X			
Signature of Fiscal Agent if appliable:	**Typed or Printed Name:**	**Phone:**	**Date:**
X			

A RESOLUTION AUTHORIZING THE ASSIGNMENT OF AUTHORIZED OFFICER(S) AND AGENT(S)

Resolution Number

Whereas, the Board of Directors / Council / Commission of Community / Utility of County Name County of the State of New Mexico shall enter into a Grant Agreement with the State of New Mexico Environment Department, and

Whereas, the Agreement is identified as Project Number SAP _____

NOW THEREFORE, BE IT RESOLVED by the named applicant that:

(Name), Mayor/ Chairperson / Director / Officer, or successor is authorized to sign the Grant Agreement for this project, and

(Authorized Officer Name), (Authorized Officer Title), (may have more than one) or successor is the OFFICAL REPRESENTATIVE(S) who is authorized to sign all other documents necessary to fulfill the Grant Agreement and the requirements (Disbursements and Notice of Obligations (NOO)) and to act as the project contact, and

(Designated Agent or Employee Name), (Title), or successor is the Budget & Formulation Management System (BFM) contact who is designated to update the BFM database quarterly per Article VIII. A. of the Intergovernmental Grant Agreement.

If a Fiscal Agent is required:
(Fiscal Agent Representative Name and Title) or successor, is the FISCAL AGENT and is authorized to sign Disbursements.
PASSED, APPROVED, AND ADOPTED: _____.

Name, Mayor / Chairperson / Director / Officer, Title, Community / Utility

_____ _____

(Signature) **Date**

(SEAL)

ATTEST:

_____

(Municipal Clerk)

Name of Grantee: _____ Project Number: _____

Current Authorized Signatures (submit with Signature Resolution; update when necessary)

Authorized to Sign Grant Agreement	
Name	
Title	
Signature	
Address	
Email	
Phone	

Official Representatives authorized to sign Disbursement Requests and All Other Documents,	
Name	
Title	
Signature	
Address	
Email	
Phone	

Alternate Official Representative; To sign Disbursement Requests and All Other Documents, Requirement and Act as the Project Contact	
Name	
Title	
Signature	
Address	
Email	
Phone	

Designated Agent or Employee that will make Quarterly BFM Updates	
Name	
Title	
Signature	Signature Not Required
Address	
Email	
Phone	

Designated Agent or Employee that will make Quarterly BFM Updates	
Name	
Title	
Signature	Signature Not Required

Address	
Email	
Phone	

FIR No. 10629

FISCAL IMPACT REPORT

General Information:

(Check) **Bill:** _____ **Resolution:** X

Short Title(s): Authorized Officers and Agents for SAP 22-G2419-STB

Sponsor(s): Councilor Amanda Chavez

Reviewing Department(s): Public Works Department

Staff Completing FIR: Regina Wheeler, Public Works Director

Date: 11/5/202 **Phone:** (505) 690-4197

Reviewed by City Attorney: _____ **Date:** Nov 8, 2024

Reviewed by Finance Director: Emily K. Oster **Date:** Nov 8, 2024

Summary:
This Resolution assigns authorized representatives and agents for Grant Agreement Number SAP 22-G2419-STB with the New Mexico Environment Department Fund ("NMED"). The Grant Agreement makes available four hundred thousand dollars ($400,000.00) appropriated by the State of New Mexico Legislature, to plan, design, and construct improvements on Jemez Road including a sewer line south of Airport Road. Adoption of this Resolution satisfies the Grant Agreement's requirement that the governing body must duly adopt or pass an official act a resolution, motion, or similar action authorizing the person identified as the official representative of the Grantee, the City of Santa Fe, to sign the agreement and to sign requests for payment.

Departments Affected:
Public Works Department.

Consequences of Not Enacting Legislation:
If this legislation is not adopted, the City will not receive the grant totaling four hundred thousand dollars ($400,000) from NMED, meaning the City of Santa Fe will not receive the funding needed to complete the plan, design, and construction for improvements on Jemez Road, which include a sewer line south of Airport Road.

Conflict, Duplication, Companionship, or Relationship to Other Legislation:
None.

Performance and Administrative Implications:
The plan, design, and construction of the project associated with this Grant Agreement will be undertaken by City of Santa Fe's Department of Public Utilities and the grant will be administered with support from the City's Public Works Department.

Fiscal Implications:
None.

Fiscal Impact

_____ Check here if no fiscal impact

Expenditures

Expenditure Type	FYE 2025	FYE 2026	FYE 2027	Require BAR (Y/N)	Recurring (R) or Non-recurring (NR)	Fund	3-Year Total Cost
Personnel and Benefits*	$	$	$				
Capital Outlay	$	$	$				
Contractual/ Professional Services	$ 200,000	$ 200,000	$				
Operating	$	$	$				$
Total:	$	$	$				$

Expenditure Narrative:

Design and construction of sewer trunk line extension.

Revenue

Revenue Type	FYE 2025	FYE 2026	FYE 2027	Recurring (R) or Non-recurring (NR)	Fund
General Fund	$	$	$		
Special Revenue	$	$	$		
CIP	$400,000	$	$		
Enterprise	$	$	$		
Internal Service	$	$	$		
Trust and Agency	$	$	$		
Federal	$	$	$		
Other	$	$	$		
Total	$	$	$		

Revenue Narrative:

Legislative grant via NMED provides this funding

Signature:

Email: rawheeler@santafenm.gov

Signature:

Email: sxmoody@santafenm.gov

CITY OF SANTA FE

Memorandum

Date: October 24, 2024

To: Governing Body, Public Works and Utilities Committee, Quality of Life Committee, Finance Committee, and Economic Development Advisory Committee

From: Daniel Hernandez, Metropolitan Redevelopment Agency, Director DH
Via: Randy Randall, Interim Community Development Director RR

RE: A Bill Approving the Sale of Buildings, Improvements, and Land at the Midtown Site, to ASPECT QOZB, LLC.

EXECUTIVE SUMMARY:
The City of Santa Fe ("City") and Midtown Santa Fe Productions QOF, LLC ("Offeror") entered into an Exclusive Negotiation Agreement on August 4, 2023, in order to negotiate a plan for Offeror to improve and purchase certain parcels of the Midtown Site, located at 1600 St Michaels Drive ("Property"). The proposed bill would approve the City and ASPECT QOZB, LLC ("Developer"), entering into a Development and Disposition Agreement (Agreement) for the Property. The DDA would requires a$5,000,000 payment, in four installments, required development of the property, and community benefits, if Purchaser completes all three phases of the purchase.

The date that the approved DDA goes into effect ("Effective Date") will be 45 days after the Bill is approved, unless a referendum is held. If a referendum is held and a majority of voters vote to approve the Ordinance, the Effective Date would be the date the election results are certified. If the majority of voters voted to disapprove the Ordinance, the Ordinance would not be effective and the Agreement would become obsolete.

NMSA 1987, Section 3-54-1, requires that the City approve the sale of City-owned property with an Ordinance. This Bill fulfills the City's requirement to comply with that statute. The purchase price consideration provided in this summary is further explained in a memorandum attached hereto called the Purchase Price Consideration for the Disposition and Development Agreement (DDA) by and between the City and Developer.

SUMMARY OF DEVELOPMENT AND DISPOSITION AGREEMENT

A. Introduction. The Agreement will set forth the terms and conditions of:

(i) Developer's obligation to design, develop and construct the Project (defined below) at the Property,

(ii) Developer's right to purchase the Property upon completion of the construction and satisfaction of certain related obligations,

(iii) the timeline, in relation to Developer's obligations, for the City's design and construction of roadway and other public improvements necessary for access to and use of the Project, and

(iv) the community benefit requirements that are required of Developer and its successors to satisfy after the purchase of the Property (as improved by Developer).

B. Project Requirements:

Project Overview: Developer's development and construction at the Property will be completed in three separate phases, as follows:

- "Phase 1" consists of the demolition of Onate Hall and the major renovation of the buildings currently known as Benildus Hall, Garson Studios (which includes "The Screen"), and Driscoll Hall, for the purpose of operating a state-of-the-art film and multi-media production studio and related office space, a publicly available theater or performance space, and a retail or restaurant space.
- "Phase 2" will include the construction of a multifamily residential building with at least 99 dwelling units (up to a maximum of 150 dwelling units), of which at least 15% will be affordable units subject to the City's inclusionary housing program.
- "Phase 3" will include the construction of either (i) a 65,000 square foot (or larger) film and multi-media production studio, or (ii) a comparable development project approved by the Governing Body that is complementary to and supportive of the film and multi-media production uses.

The buildings and other improvements contemplated as being constructed and installed for each Phase are collectively referred to as the "Private Improvements." The Private Improvements and the Property are collectively referred to as the "Project."

Financial Security: Developer will be required to provide a guaranty of performance and payment from its principal in connection with the initial Phase and a performance bond and a payment bond to the City with respect to the subsequent Phases, each of which will be in an amount sufficient to cover the cost of the construction of the applicable Private Improvements.

C. Master Plan Amendment: The uses contemplated for the Project are not all presently permitted under the Master Plan. As a condition precedent to the commencement of any construction at the Property, the MRA Office will need to submit and obtain approval for an amendment to the Master Plan that modifies the permitted uses at the Property to include addition uses previously not included, such as the housing mentioned above. If the additional uses are not approved, Developer will have the right to terminate the Agreement, upon which

City would return the Developer's deposit and neither the City nor Developer will have any further rights or obligations under the Agreement.

D. City Right-of-Way Improvements: The Agreement describes the City's responsibility for designing and constructing the public roadway improvements, storm drainage facilities, and related infrastructure lying within the areas of the Midtown Site that will be designated for public right of way, as described in the RFP. The Agreement describes that the City will use its best efforts to complete the portions of such public improvements necessary for Developer's use and operation of each Phase prior to Developer's completion of such Phase, provided that if the City is unable to timely complete the applicable public improvements, the City will not take any actions to impede the issuance to Developer of a certificate of occupancy for the completed Phase as a result of the City's delay so long as Developer constructs and installs temporary ADA improvements for access to such Phase in compliance with applicable law.

E. Developer's Purchase of the Property:

Purchase Price. The purchase price for the Property (the "Purchase Price") to be paid by Developer to the City is $5,000,000. On the Effective Date of the Agreement, Developer will pay an initial deposit of $1,000,000 ("Initial Deposit"), which amount is nonrefundable except in the event the amendment to the Master Plan is not approved.

Closing: Following the Initial Deposit, the City will continue to own the fee interest in the Property applicable to each Phase during Developer's construction of the Private Improvements for such Phase. Provided Developer is not in breach of the Agreement, the City will execute and record a quitclaim deed to the Property applicable to any Phase following Developer's receipt of the final certificates of occupancy for such Phase and the City's receipt of an installment payment of a portion of the Purchase Price, in the amount of $2,250,000 for Phase 1, $1,250,000 for Phase 2, and $500,000 for Phase 3.

F. Community Benefits:

- *Economic Impact Requirement*: Developer is required to cause film production companies operating at the Project to generate direct production expenditures in New Mexico of (i) at least $30,000,000 during the first five years of the Agreement, and (ii) at least $150,000,000, by the 15th year of the Agreement. If the Project fails to generate expenditures of at least the amounts set forth above, Developer will be required to pay a fee to the City of $25,000 per year per non-compliance event.
- *Economic Opportunity Requirement*: Developer is required to use commercially reasonable efforts to coordinate among local community organizations and certain employers operating at the Project from time to time to post or advertise employment opportunities available with such employers at the Project to local residents.

- *Commercial Use Requirement*: Developer is required to use commercially reasonable efforts to secure and maintain tenants for the retail space at Driscoll Hall that will continuously operate businesses open to the public during normal business hours.
- *Film Internship Requirement*: Developer is required to require that the production companies operating at the Property offer and fill an aggregate total of 20, six-week internships per year in partnership with a New Mexico-based film school or internship program, adjusted proportionally in relation to the percentage of leased studio space.
- *Cultural Elements Requirement*: Developer will (i) provide local community organizations access to the theater screen for at least eight days per year, (ii) coordinate with local community organizations to include within the programming for the theater space at least four events per year that promote the interests of a group historically subject to discrimination or otherwise underrepresented or of a cause supportive of any of such group's interests.
- *Educational Space Covenant*: The City will record a covenant against the Property requiring that at least 3,000 square feet of space in one of the buildings be used exclusively for educational uses (e.g., classroom study).

G. **Default Remedies**: If Developer defaults in its performance of any obligation under the Agreement beyond applicable notice and cure periods, in addition to other remedies available to the City, the City will have the right to terminate the Agreement, upon which the City may retake possession of the Property.

H. **Right of First Refusal**: During the five-year period following the completion of Phase I, if Developer receives an offer for the sale of any portion of the Property to a third-party that Developer desires to accept, the City will have a right of first refusal to purchase such portion of the Property on the terms and conditions set forth in the third-party offer.

ATTACHMENTS:
Bill
FIR
Memo Attachment - Memorandum: Purchase Price Consideration
Memo Attachment - Memorandum: Lease Summary

CITY OF SANTA FE, NEW MEXICO

BILL NO. 2024-19

INTRODUCED BY:

Mayor Alan Webber

A BILL

APPROVING THE SALE OF CITY-OWNED BUILDINGS, IMPROVEMENTS, AND SIX PARCELS LOCATED AT 1600 ST MICHAELS DRIVE WITHIN THE CITY AND COUNTY OF SANTA FE, NEW MEXICO, ASPECT QOZB, LLC, IN THREE PHASES, FOR A TOTAL OF $5,000,000.

BE IT ORDAINED BY THE GOVERNING BODY OF THE CITY OF SANTA FE:

Section 1. The City of Santa Fe ("City") hereby approves the sale of buildings, improvements, and land located at 1600 Saint Michaels Drive and further described in Section 3(A) below, to Aspect QOZB, LLC ("Purchaser"), with terms described in Section 3 below.

Section 2. This Ordinance shall be effective forty-five days after the date of adoption, unless a referendum is held pursuant to NMSA 1978, Section 3-54-1.

Section 3. Terms of the Sale:

A. Property to be Sold. The City agrees to sell its ownership interest in buildings, improvements, and land located at 1600 St. Michaels Drive in the City and County of Santa Fe, New Mexico, being more particularly described as follows to-wit: Ownership

interest in the buildings, improvements, and land which are located upon the six tracts of real estate more particularly described in Attachment A, the Development and Disposition Agreement ("Property").

B. The purpose for the municipality entering into the sale. The City issued a request for proposals for disposition of the Property and the Purchaser responded to that request. The City and the Purchaser entered into an Exclusive Negotiation Agreement on July 26, 2023, and, pursuant to this ordinance enter the attached Development and Disposition Agreement (Attachment A).

Amount of the Sale. The Purchaser shall pay $5,000,000 total in the following phases, as defined in Attachment A: $1,000,000.00 in cash on the Effective Date. Purchaser shall then pay $2,250,000 on the date of Phase 1 Closing, $1,250,000 at Phase 2 Closing, and $500,000 on the date of the Phase 3 Closing.

C. Time and Manner of the Sale. Closings shall comply with the statutory requirements in NMSA 1978, Section 3-54-1, and shall take place as described in in Article 10 of Attachment A.

D. Purchase "As Is". The Purchaser shall purchase the City's Property Interest in an "as is" condition with all known and latent defects. The City makes no representations or warranties as to the physical condition of the Property.

Section 4. This Ordinance shall be published as required by NMSA 1978, Sections 3-17-3 and 3-54-1.

Section 5. This Ordinance shall become effective forty-five (45) days after its adoption, unless a referendum election is held pursuant to NMSA 1978, Section 3-54-1.

Section 6. The City shall execute the necessary Quitclaim Deeds after the effective date of this ordinance, according to Exhibit A.

_____

ALAN WEBBER, MAYOR

ATTEST:

_____

GERALYN CARDENAS, INTERIM CITY CLERK

APPROVED AS TO FORM:



_____

ERIN K. MCSHERRY, CITY ATTORNEY

Attachment A

Recording Requested By,
And When Recorded Return To:

CITY OF SANTA FE
200 LINCOLN AVENUE
SANTA FE, NM 87501
ATTN: ERIN MCSHERRY, CITY ATTORNEY

DEVELOPMENT AND DISPOSITION AGREEMENT

BY AND BETWEEN

CITY OF SANTA FE

AND

ASPECT QOZB, LLC

Dated: _____, 20__

29272767.12

TABLE OF CONTENTS

Page

ARTICLE 1 DEFINITIONS **2**
ARTICLE 2 EFFECTIVE DATE; TERM OF AGREEMENT **13**
2.1 Effective Date 13
2.2 Term 13
2.3 Lease 13
2.4 Furniture, Fixtures & Equipment 13
ARTICLE 3 DEVELOPER REPRESENTATIONS, WARRANTIES AND COVENANTS **13**
ARTICLE 4 PROJECT CONSIDERATION **15**
4.1 Consideration 15
ARTICLE 5 DEVELOPER ROLE; PROJECT APPROVALS AND TIMELINE **15**
5.1 Developer Role 15
5.2 Phase 1 Plans; Phase 1 Construction Schedule 16
5.3 Phase 2 Plans; Phase 2 Construction Schedule 18
5.4 Phase 3 Plans; Phase 3 Construction Schedule 20
5.5 Defects in Plans 22
5.6 Cooperation with the City 22
ARTICLE 6 CONDITIONS PRECEDENT TO COMMENCEMENT OF CONSTRUCTION **22**
6.1 Master Plan Amendment. 22
6.2 Phase 1 Condition Precedent 23
6.3 Phase 2 Conditions Precedent. 24
6.4 Phase 3 Conditions Precedent 24
ARTICLE 7 PRIVATE IMPROVEMENTS **24**
7.1 Phase 1 Improvements 24
7.2 Phase 2 Improvements 25
7.3 Phase 3 Improvements 26
7.4 Construction Standard; Other Requirements 26
7.5 Site Restoration 26
ARTICLE 8 RIGHT OF WAY IMPROVEMENTS **27**
8.1 Right of Way Plans 27
8.2 Right of Way Completion 27
8.3 Cost of Project ROW Improvements 28
8.4 Coordination; Cooperation 28
8.5 Ancillary Midtown ROW Improvements; City Delay 28
8.6 Gas Loop Declaration; Existing Utilities and Utilities Agreement 29
ARTICLE 9 SUBDIVISION **30**
9.1 Subdivision Plat 30
ARTICLE 10 CONVEYANCE OF PROPERTY **30**
10.1 Closing; Closing Costs 30
10.2 Phase 1 Closing 30
10.3 Phase 2 Closing. 31
10.4 Phase 3 Closing. 32
10.5 Title and Permitted Exceptions 33
10.6 No Warranties as to Property; As-Is. 35
ARTICLE 11 COMMUNITY BENEFITS **35**
11.1 Economic Impact Requirements 35
11.2 Economic Impact Benefit 35
11.3 Economic Opportunity Requirements 36
11.4 Commercial Use Requirements 36
11.5 Film and Multi-Media Internship Requirements 36

TABLE OF CONTENTS

Page

11.6 Cultural Elements....37
11.7 Dedication of Educational Space....38
11.8 Housing Elements....38
11.9 Midtown District Assessments....38
11.10 Building Names....38
11.11 Environmental Elements....38
11.12 Environmental and Energy Design Requirements....39
ARTICLE 12 MAINTENANCE AND REPAIR 39
12.1 Maintenance and Repair....39
12.2 Damage....39
ARTICLE 13 RESERVED 40
ARTICLE 14 RELEASE & INDEMNIFICATION 40
14.1 Release....40
14.2 General Indemnity....40
14.3 Environmental Indemnity....41
14.4 Survival....41
ARTICLE 15 ASSIGNMENT; TRANSFER 41
15.1 Assignment; Transfer....41
15.2 Permitted Transfer....41
15.3 Collateral Assignment....42
15.4 Financing....42
ARTICLE 16 LIENS 43
ARTICLE 17 REPORTING REQUIREMENTS 43
17.1 Reporting Requirements....43
17.2 Audits and Inspections....44
17.3 IPRA Compliance....44
17.4 . Developer understands that records in the possession of the City are subject to IPRA, and to the extent required, Developer will comply with IPRA....44
ARTICLE 18 DEFAULT AND REMEDIES 44
18.1 Default by Developer....44
18.2 Remedies....46
18.3 Liquidated Damages....47
18.4 Community Benefit and Commercial Use Requirements....48
18.5 Rights and Remedies Cumulative....48
18.6 Event of Default by City....48
18.7 Waiver....49
18.8 Cross-Termination....49
ARTICLE 19 RIGHT OF FIRST REFUSAL 49
19.1 City Right of First Refusal....49
19.2 Contract Negotiation....50
19.3 Termination of Right of First Refusal....50
ARTICLE 20 GENERAL PROVISIONS 50
20.1 Compliance with Laws....50
20.2 Discrimination Prohibited....50
20.3 Recordation....51
20.4 Covenants Running With the Land....51
20.5 Notices....51
20.6 Relationship Between Parties....52
20.7 No Third-Party Rights....52

TABLE OF CONTENTS

Page

20.8 Counterparts 52
20.9 Exhibits; Ancillary Documents 52
20.10 Time of Essence 52
20.11 Computation of Time 53
20.12 Effect and Duration of Agreement Provisions 53
20.13 Force Majeure 53
20.14 Severability 53
20.15 Interpretation 54
20.16 Sections 54
20.17 Gender, Singular/Plural 54
20.18 Headings and Captions 54
20.19 Further Assurances 54
20.20 Waiver 54
20.21 Modifications; City Approval 54
20.22 Legal Advice 55
20.23 Non-Liability of Officials and Employees of the City 55
20.24 New Mexico Tort Claims Act 55
20.25 Governing Law 55
20.26 Legal Proceedings; Attorneys' Fees and Costs 55
20.27 Waiver of Jury Trial 55
20.28 Approval Required 56
20.29 Appropriations 56
20.30 No Pecuniary Liability of City 56
20.31 Officials, Agents and Employees Not Personally Liable 56
20.32 No Collusion 56
20.33 Public Records 56
20.34 Governmental Right and Powers 57
20.35 Survival 57

EXHIBITS

Exhibit A	Depiction of Midtown Site
Exhibit B-1	Depiction of Property
Exhibit B-2	Legal Description of Property
Exhibit C	Lease Agreement
Exhibit D	Developer Owner and Control Parties
Exhibit E	Phase 1 MRA-Approved Conceptual Plans
Exhibit F	LEED Requirements
Exhibit G-1	Form of Guaranty
Exhibit G-2	Form of Bond
Exhibit H	Aspect Electrical Loop Plans
Exhibit I	Location of Project ROW Improvements
Exhibit J	Utilities Agreement
Exhibit K	Form of Educational Use Covenants
Exhibit L	Form of Assignment of Plans
Exhibit M	Form of Report
Exhibit N	Required Uses
Exhibit O	Phasing Depiction

DEVELOPMENT AND DISPOSITION AGREEMENT

THIS DEVELOPMENT AND DISPOSITION AGREEMENT (this "**Agreement**") is entered into by and between the CITY OF SANTA FE, a municipal corporation and political subdivision of the State of New Mexico (the "**City**"), and ASPECT QOZB, LLC, a Delaware limited liability company ("**Developer**"), effective as of the Effective Date (defined below). The City and Developer are sometimes referred to herein individually as a "**Party**" and together as the "**Parties**."

RECITALS

A. The City owns the real property and improvements consisting of approximately 60 acres generally located within the block defined by Cerrillos Road, St. Michaels Drive, Llano Street, Siringo Road, and Camino Carlos Rey in the City of Santa Fe, County of Santa Fe, State of New Mexico, as generally depicted on Exhibit A attached hereto (the "**Midtown Site**").

B. By Resolution No. 2022-68, approved on November 30, 2022, the governing body of the City (the "**Governing Body**") adopted the Midtown Master Plan (the "**Master Plan**"), which, together with the Midtown Community Development Plan adopted on January 25, 2023 by Resolution No. 2023-5 (the "**Community Development Plan**"), sets forth the City's vision for development of the Midtown Site and establishes certain form-based zoning standards and certain other standards and policies for the future redevelopment of the Midtown Site as a sustainable, pedestrian-friendly, mixed-use neighborhood that provides employment and housing opportunities, improved mobility options, and access to recreation, public spaces, and cultural venues.

C. On August 9, 2023, the Governing Body, by Ordinance No. 2023-21, revised the City of Santa Fe metropolitan redevelopment code (the "**City Redevelopment Code**"), under which the Governing Body updated its ordinance establishing a metropolitan redevelopment agency (the "**MRA**"), comprised of the commission of the MRA (the "**MRA Commission**"), the director of the MRA ("**MRA Director**"), and staff, as the official body for making advisory recommendations to the Governing Body, at such time as an area is designated by the Governing Body with respect thereto, and for taking certain actions delegated to the MRA pursuant to the City Redevelopment Code. In the absence of a MRA Director, the City Manager or the City Manager's designee will act for the MRA Director hereunder.

D. The City released a Request for Proposals on December 1, 2022 (the "**Studio RFP**"), for the redevelopment and operation of the portion of the Midtown Site to, among other things, expand the existing film production studio facilities with the addition of more state-of-the art sound stages, pre- and post-production offices and work facilities to meet the needs of the industry and support film and multi-media production in the City, all as more specifically set forth in the Studio RFP. The City will subdivide the Property into parcels as set forth in Section 9.1 below.

E. Midtown Santa Fe Productions QOF, LLC, a Delaware limited liability company affiliated with Developer ("**QOF**"), submitted the only response to the Studio RFP on March 2, 2023, to redevelop the Property consistent with the Studio RFP (the "**Proposed Project**"). QOF proposed combining the Proposed Project with the adjacent Midtown Santa Fe Production Studio at the Shellaberger Property (defined below), and envisions that the combined projects will become the largest studio in northern New Mexico, featuring multi-family housing, six soundstages and nearly 180,000 square feet of production and support space across five different buildings.

F. Pursuant to the Studio RFP, the City established an Evaluation Committee to review and evaluate the response based on the factors set forth in the Studio RFP, following which the Evaluation Committee determined that QOF had the experience, qualifications, and capacity to implement the scope of work and achieve the vision and goals articulated in the Studio RFP.

G. The City and QOF entered into the Exclusive Negotiation Agreement approved by the Governing Body on July 26, 2023 (as extended, the "**ENA**"), for the redevelopment of the Proposed Project consistent with the Studio RFP. The ENA included, among other things, that the City and QOF would negotiate and enter into a disposition and development agreement setting forth the scope of the Proposed Project and the requirements and conditions for the design, development, operation and disposition of the completed Proposed Project.

H. The City intends to approve the Lease Agreement between the City and Developer attached hereto as Exhibit C (the "**Lease**"), for the purpose of leasing the Property to Developer to enable Developer to perform its obligations under this Agreement, until such time as the City conveys the Property (or a portion thereof) to Developer pursuant to the terms hereof.

I. Concurrently with Developer's lease of the Property, Developer will redevelop the Property in three phases (each, a "**Phase**" and, collectively, the "**Phases**"), as depicted on Exhibit B-1. The real property and the improvements now existing or hereinafter constructed pursuant to this Agreement, collectively, comprising the first, second and third Phases of the Property are referred to herein as "**Phase 1**", "**Phase 2**" and "**Phase 3**," respectively.

J. This Agreement sets forth the terms, conditions, covenants and obligations concerning (i) Developer's completion of the Private Improvements (defined below), (ii) the City's completion of the applicable Project ROW Improvements (defined below) applicable to Phase 1 and Phase 2, and (iii) the conveyance of each Phase to Developer upon satisfaction of the conditions for such Phase set forth in Article 10.

K. The City is authorized, pursuant to the City Code (defined below) to enter into a binding development and disposition agreement to carry out the plan for the development of the Property.

AGREEMENT

NOW THEREFORE, for and in consideration of the mutual promises, covenants and conditions contained herein, the receipt and sufficiency of which are hereby acknowledged, the City and Developer hereby agree that the foregoing recitals are true and correct and incorporated herein and as follows:

ARTICLE 1
DEFINITIONS

As used in this Agreement, the following terms shall have the following meanings:

1.1 "**ADA**" is defined in Section 20.1.

1.2 "**Adjacent Improvements**" is defined in Section 12.2.

1.3 "**Adjacent Land**" is defined in Section 12.2.

1.4 "**Affiliate**" means any Person (as defined below) which Controls, is Controlled by, or is under common Control with Developer.

1.5 "**Aggregate Spend Period**" is defined in Section 11.1.

1.6 "**Agreement**" is defined in the introductory paragraph.

1.7 "**Applicable Rules**" means, collectively, the provisions of this Agreement and the then-current versions of the following: (a) the City Code, including, but not limited to, the Midtown Local Innovation Corridor District adopted by the Governing Body on October 26, 2016 pursuant to Ordinance No. 2016-39, and all other rules, regulations, ordinances and officially adopted policies of the City; (b) the Master Plan, the Community Development Plan and the Plat (as of recordation thereof), in each case as may be amended pursuant to the City Code and this Agreement; and (c) any and all applicable local, state and federal laws, rules and regulations affecting the Property or otherwise applicable to the Parties. Subject to applicable laws, in the event of a conflict among the Applicable Rules, the more specific standard, limitation or requirement shall govern or prevail to the extent of the conflict. If neither standard is more specific, then the more stringent standard, limitation or requirement shall govern or prevail to the extent of the conflict unless otherwise specified by applicable laws.

1.8 "**Approvals**" is defined in Section 5.1.5.

1.9 "**Approved Designee**" has the meaning given in Section 15.1 of the Lease.

1.10 "**Approved Exceptions**" is defined in Section 10.5.5(a).

1.11 "**ArtHouse ROW Improvements**" is defined in Section 8.3.

1.12 "**Benildus Name**" is defined in Section 11.10.

1.13 "**Buildings**" is defined in Section 1.154.

1.14 "**Business Day**" means Monday through Friday and specifically excludes Federal, State, and City holidays and any additional days on which City offices are closed (other than essential services).

1.15 "**Certificate of Completion**" means a letter provided by the MRA Director for each Phase upon Developer's satisfactory achievement of Final Completion of such Phase, acknowledging satisfaction of the Private Improvement Project Specifications (defined below) required for each Phase.

1.16 "**City**" is defined in the introductory paragraph.

1.17 "**City Code**" means The Santa Fe City Code of 1987, as amended from time-to-time.

1.18 "**City Parties**" is defined in Section 5.5.

1.19 "**City Redevelopment Code**" is defined in Recital C above.

1.20 "**Claims**" is defined in Section 14.2.

1.21 "**Closing**" and "**Closings**" have the meaning set forth in Section 4.1.4.

1.22 "**Commercial Use Requirement**" is defined in Section 11.4.

1.23 "**Community Benefit Requirements**" is defined in Section 18.4.

1.24 "**Community Development Plan**" is defined in Recital B above.

1.25 "**Conceptual Plans**" means standard conceptual design and development plans required for development projects in the City of Santa Fe, including the following plans and information: dimensioned conceptual site plan(s) indicating building setbacks and frontages, circulation plans and landscape plans; conceptual building elevations indicating heights and massing, and conceptual renderings showing building elevations and site sections; and, as necessary, other concept drawings to indicate consistency with the Master Plan design concepts; together with the conceptual development program setting forth the number of buildings, square footage of building, space types, and uses, as well as any other conceptual uses, including affordability, that achieve requirements or goals of the Master Plan and Community Development Plan.

1.26 "**Construction Activities**" is defined in Section 12.1.

1.27 "**Construction Commencement**" or "**Commence Construction**" means, with respect to the construction of the applicable Private Improvements, such time as (a) the MRA Director has delivered to Developer a Notice to Proceed for the applicable Phase, (b) all Approvals required by any Governmental Authorities under the Applicable Rules have been issued, including payment of the required fees and the provision of required bonds, (c) Developer commences work or activities related to the grading, foundations, demolition or other site work at the Project, and (d) unless waived by the City, Developer has hosted a ground breaking ceremony in coordination with the City.

1.28 "**Consumer Price Index**" means the Consumer Price Index for All Urban Consumers for the West Region for all Items (1982-1984= 100) as published by the United States Department of Labor, Bureau of Labor Statistics. If the manner in which the Consumer Price Index is determined by the Bureau of Labor Statistics shall be substantially revised (including a change in the base index year), an adjustment shall be made by the City Manager in such revised index that produces results equivalent, as nearly as possible, to those which would have been obtained if the Consumer Price Index had not been so revised. If the Consumer Price Index is discontinued, then "Consumer Price Index" shall mean an index chosen by City Manager which is, in City Manager's reasonable judgment, comparable to the index specified above.

1.29 "**Control**" or "**Controlling**" (or any similar conjugated form thereof) means, when used with respect to any specified Person, the (a) possession, directly or indirectly, of the power to direct or cause the direction of the management or policies of such Person, whether through the ownership of voting securities or other ownership interests, by contract or otherwise, and (b) ownership, directly or indirectly, in the aggregate, of at least 51% of the beneficial ownership interests of such Person.

1.30 "**Cultural Elements Requirements**" is defined in Section 11.6.

1.31 "**Deed**" is defined in Section 10.5.1.

1.32 "**Developer**" is defined in the introductory paragraph.

1.33 "**Developer Parties**" is defined in Section 12.1.

1.34 "**Developer's Principal**" means Phillip Gesue.

1.35 "**Developer's Share**" is defined in Section 8.3.

1.36 "**Discretionary Modifications**" is defined in Section 6.1

1.37 "**Disputes**" is defined in Section 20.26.

1.38 "**Driscoll Retail Space**" is defined in Section 7.1.5(b).

1.39 "**Economic Impact Benefit**" is defined in Section 11.1.

1.40 "**Effective Date**" is defined in Section 2.1.

1.41 "**Election Notice**" is defined in Section 19.1.

1.42 "**ENA**" is defined in Recital G above.

1.43 "**Environmental Laws**" means all federal, state and local environmental, health and safety statutes, as may from time to time be in effect, including but not limited to federal laws such as, but not limited to, the Comprehensive Environmental Response, Compensation and Liability Act (CERCLA), 42 U.S.C. §§ 9602 *et seq*., the Superfund Amendments and Reauthorization Act of 1986, 42 U.S.C. § 9601(20)(D), the Resource Conservation and Recovery Act (RCRA), 42 U.S.C. §§ 6901 *et seq*., the Federal Water Pollution Control Act, as amended by the Clean Water Act Amendments of 1977, 33 U.S.C. §§ 1251 *et seq*. (CWA), the Clean Air Act of 1966, as amended, 42 U.S.C. §§ 7401 *et seq*., the Federal Insecticide, Fungicide and Rodenticide Act, 7 U.S.C. §§ 136 *et seq*., the Occupational Safety and Health Act, 29 U.S.C. §§ 651 *et seq*., the Safe Drinking Water Act, 42 U.S.C. §§ 300f *et seq*., the Toxic Substances Control Act, 15 U.S.C. §§ 2601 *et seq*., and any and all federal, state and local rules, regulations, authorizations, judgments, decrees, court decisions, concessions, grants, franchises, agreements, orders and other governmental restrictions and other agreements relating to the environment or to any Pollutants, as may from time to time be in effect.

1.44 "**Escrow Agent**" is defined in Section 8.3.

1.45 "**Escrow Amount**" is defined in Section 8.3.

1.46 "**Event of Default**" is defined in Section 18.1.

1.47 "**Film Internship Requirements**" is defined in Section 11.5.

1.48 "**Final Application**" is defined in Section 6.1.

1.49 "**Final Completion**" means, with respect to the applicable Phase, such time as (a) the Private Improvements for such Phase have been completed in accordance with the Final Design Plans and the Applicable Rules, subject only to minor punch list items (i.e., items that, individually and in

the aggregate, do not and will not prohibit, delay or adversely affect, under the Applicable Rules, the commencement and continued operation of business for the permitted use and can be corrected and completed within 60 days after identification), and if applicable, any land dedications required to be made and accepted by the City in accordance with the Applicable Rules, (b) a final or temporary certificate of occupancy (or its equivalent as the context requires) for all components of the applicable Private Improvements has been issued, (c) Developer has obtained all required approvals, permits, licenses, and certificates of any Governmental Authorities required under the Applicable Rules for the lawful occupancy and use of the applicable Private Improvements and applicable portion of the Property for its intended purpose, (d) the Developer has completed all obligations and liabilities of Developer set forth in this Agreement with respect to the Private Improvements for the applicable Phase to the City Manager's satisfaction, and (e) Developer has hosted a ribbon cutting ceremony in coordination with the City.

1.50 "**Final Design Plans**" means, collectively, the Phase 1 Component Final Design Plans, the Phase 2 Final Design Plans and the Phase 3 Final Design Plans.

1.51 "**Final Response Deadline**" is defined in Section 10.5.3.

1.52 "**Financial Statements**" is defined in Section 17.1.3.

1.53 "**Force Majeure Event**" is defined in Section 20.13.

1.54 "**Garson Name**" is defined in Section 11.10.

1.55 "**Gas Loop Declaration**" is defined in Section 8.6.1.

1.56 "**Gas Loop Regulations**" is defined in Section 8.6.1.

1.57 "**Guaranty**" is defined in Section 6.2.

1.58 "**Governance Documents**" is defined in Section 3.4.

1.59 "**Governing Body**" is defined in Recital B above.

1.60 "**Governmental Authorities**" means any and all federal, state, county, city, town, other municipal corporation, governmental or quasi-governmental board, agency, authority, department or body having jurisdiction over the Project.

1.61 "**Guaranty**" is defined in Section 6.2.

1.62 "**Historical Names**" is defined in Section 11.10.

1.63 "**Initial Spend Period**" is defined in Section 11.1.

1.64 "**IPRA**" means the New Mexico Inspection of Public Records Act (Sections 14-2-1 et seq., NMSA 1978).

1.65 "**Lease**" is defined in Recital H above.

1.66 "**Lease Term**" means the "Term" of the Lease, as such term is defined therein.

1.67 "**Leasing Deadline**" is defined in Section 11.4.

1.68 "**Legal Description**" is defined in Section 9.1.

1.69 "**Liabilities**" is defined in Section 5.5.

1.70 "**Lien**" is defined in Article 16.

1.71 "**Master Plan**" is defined in Recital B above.

1.72 "**Master Plan Amendment**" is defined in Section 6.1.

1.73 "**Midtown Engagement Partners**" means the community-based partners acting in concert with the City to provide outreach to the community, which partners are selected by the City from time to time.

1.74 "**Midtown Gas Loop**" is defined in Section 8.6.1.

1.75 "**Midtown ROW Improvements**" is defined in Section 8.1.

1.76 "**Midtown Site**" is defined in Recital A above.

1.77 "**Minimum Aggregate Amount**" is defined in Section 11.1.

1.78 "**Minimum Initial Amount**" is defined in Section 11.1.

1.79 "**Monetary Encumbrances**" is defined in Section 10.5.3.

1.80 "**MRA**" is defined in Recital C above.

1.81 "**MRA Director**" is defined in Recital C above.

1.82 "**New Exception**" is defined in Section 10.5.4.

1.83 "**New Exception Review Period**" is defined in Section 10.5.4.

1.84 "**Non-Compliance Fee**" is defined in Section 18.4.

1.85 "**Notice to Proceed**" means written notice from the MRA Director to Developer confirming that the conditions precedent to the commencement of a particular Phase have been satisfied.

1.86 "**Objection Deadline**" is defined in Section 10.5.3.

1.87 "**Objection Notice**" is defined in Section 10.5.3.

1.88 "**Offer Contract**" is defined in Section 19.2.

1.89 "**Offer Contract Deadline**" is defined in Section 19.2.

1.90 "**Offer Land**" is defined in Section 19.1.

1.91 "**Offer Notice**" is defined in Section 19.1.

1.92 "**Offer Party**" is defined in Section 19.1.

1.93 "**Official Records**" is defined in Section 20.3.

1.94 "**Party**" and "**Parties**" are defined in the introductory paragraph.

1.95 "**Permitted Exceptions**" is defined in Section 10.5.5.

1.96 "**Person**" means any individual, partnership, corporation, limited liability company, trust, estate, other legal entity or Governmental Authorities.

1.97 "**Phase**" is defined in Recital I above.

1.98 "**Phase 1**", "**Phase 2**", and "**Phase 3**" are defined in Recital I above.

1.99 "**Phase 1 Building Permit Submission Date**" is defined in Section 5.2.7.

1.100 "**Phase 1 Closing**" is defined in Section 10.2.2.

1.101 "**Phase 1 Closing Conditions**" is defined in Section 10.2.1.

1.102 "**Phase 1 Closing Date**" is defined in Section 10.2.2.

1.103 "**Phase 1 Commencement Date**" is defined in Section 5.2.8.

1.104 "**Phase 1 Component Final Design Plans**" is defined in Section 5.2.4.

1.105 "**Phase 1 Conceptual Plans**" is defined in Section 5.2.1.

1.106 "**Phase 1 Conveyance**" is defined in Section 10.2.1.

1.107 "**Phase 1 Final Completion Date**" means the date Developer achieves Final Completion of the Phase 1 Improvements.

1.108 "**Phase 1 Improvements**" is defined in Section 7.1.

1.109 "**Phase 1 MRA-Approved Component Design Plans**" is defined in Section 5.2.3.

1.110 "**Phase 1 Preliminary Component Design Plans**" is defined in Section 5.2.2.

1.111 "**Phase 1 Purchase Installment**" is defined in Section 4.1.2.

1.112 "**Phase 1 Purchase Notice**" is defined in Section 10.2.1(b).

1.113 "**Phase 2 Building Permit Submission Date**" is defined in Section 5.3.7.

1.114 "**Phase 2 Closing**" is defined in Section 10.3.2.

1.115 "**Phase 2 Closing Conditions**" is defined in Section 10.3.1.

1.116 "**Phase 2 Closing Date**" is defined in Section 10.3.2.

1.117 "**Phase 2 Commencement Date**" is defined in Section 5.2.8.

1.118 "**Phase 2 Conceptual Plans**" is defined in Section 5.3.1.

1.119 "**Phase 2 Conveyance**" is defined in Section 10.3.1.

1.120 "**Phase 2 Final Design Plans**" is defined in Section 5.3.4.

1.121 "**Phase 2 Improvements**" is defined in Section 7.2.

1.122 "**Phase 2 MRA-Approved Conceptual Plans**" is defined in Section 5.3.1.

1.123 "**Phase 2 MRA-Approved Design Plans**" is defined in Section 5.3.3.

1.124 "**Phase 2 Preliminary Design Plans**" is defined in Section 5.3.2.

1.125 "**Phase 2 Purchase Installment**" is defined in Section 4.1.3.

1.126 "**Phase 2 Purchase Notice**" is defined in Section 10.3.1(b).

1.127 "**Phase 3 Closing**" is defined in Section 10.4.2.

1.128 "**Phase 3 Closing Conditions**" is defined in Section 10.4.1.

1.129 "**Phase 3 Closing Date**" is defined in Section 10.4.2.

1.130 "**Phase 3 Commencement Date**" is defined in Section 5.4.8.

1.131 "**Phase 3 Conceptual Plans**" is defined in Section 5.4.1.

1.132 "**Phase 3 Conveyance**" is defined in Section 10.4.1.

1.133 "**Phase 3 Final Design Plans**" is defined in Section 5.4.4

1.134 "**Phase 3 Improvements**" is defined in Section 7.3.

1.135 "**Phase 3 MRA-Approved Conceptual Plans**" is defined in Section 5.4.1.

1.136 "**Phase 3 MRA-Approved Design Plans**" is defined in Section 5.4.3.

1.137 "**Phase 3 Preliminary Design Plans**" is defined in Section 5.4.2.

1.138 "**Phase 3 Purchase Installment**" is defined in Section 4.1.4.

1.139 "**Phase 3 Purchase Notice**" is defined in Section 10.4.1(c).

1.140 "**Phasing Plan**" is defined in Section 8.5.

1.141 "**Plans and Specifications**" means collectively any and all plans, site plans, specifications, architectural drawings, renderings, plans, plats, agreements, contracts, permits, certificates, entitlements and approvals, reports, assessments, studies, and surveys relating to the Property.

1.142 "**Plat**" is defined in Section 9.1.

1.143 "**Pollutant**" means any material, waste or substance that is now or may become regulated or governed by any Environmental Laws, or the presence of which requires investigation under any Environmental Laws, or any flammable, explosive, corrosive, reactive, carcinogenic, radioactive material, hazardous waste, toxic substance or related material and any other substance or material defined or designated as a hazardous or toxic substance, material or waste by any Environmental Laws.

1.144 "**Preliminary Approval Notice**" is defined in Section 5.2.

1.145 "**Preliminary Design Plans**" include detailed and dimensioned site plans indicating building setbacks and frontages, vehicular circulation, areas for parking and deliveries, pedestrian and bicycle circulation areas and facilities; landscape plans indicating plant and color palette, outdoor amenities, and materials identification; building elevations and floor plans indicating facade materials, color, entries/exits, and design features; site sections and general description of building systems, construction type, and green-building features, (for building rehabilitation, a general description of code compliance, accessibility, fire, health, and safety improvements) to indicate the design and construction intent of the proposed development, and consistency with the Master Plan. Preliminary Design Plans also includes a detailed development program with square footage of building area, space types, and uses, as well as any uses, including affordability, that achieve requirements or goals of the Master Plan and Community Development Plan.

1.146 "**Preliminary Disapproval Notice**" is defined in Section 5.2.

1.147 "**Private Improvement Project Specifications**" means, individually or collectively, as applicable, the obligations set forth in Article 7 required to be performed by Developer in order to achieve Final Completion of the Private Improvements for each Phase.

1.148 "**Private Improvements**" means, individually or collectively, as applicable, the Phase 1 Improvements, the Phase 2 Improvements, and the Phase 3 Improvements, or the applicable portion thereof.

1.149 "**Prohibited Person**" means any of the following: (a) a Person that is listed in the Annex to, or is otherwise subject to the provisions of, Executive Order No. 13224 on Terrorist Financing (effective September 24, 2001) (the "**Executive Order**"); (b) a Person owned or controlled by, or acting for or on behalf of any person or entity that is listed in the Annex to, or is otherwise

subject to the provisions of, the Executive Order; (c) a Person that is named as a "specially designated national" or "blocked person" on the most current list published by the U.S. Treasury Department's Office of Foreign Assets Control ("**OFAC**") at its official website, https://ofac.treasury.gov/sanctions-list-service; (d) a Person that is otherwise the target of any economic sanctions program currently administered by OFAC; or (e) a Person that is affiliated with any person or entity identified in clause (a), (b), (c) and/or (d) above.

1.150 "**Project**" means the Proposed Project, as developed and operated by Developer pursuant to the terms of this Agreement, including, but not limited to Developer's obligations under Article 7 and Article 11.

1.151 "**Project Employer**" is defined in Section 11.3.

1.152 "**Project Employment Opportunities**" is defined in Section 11.3.

1.153 "**Project ROW Improvements**" is defined in Section 8.1.

1.154 "**Property**" means the approximately 11 acres of land, together with the buildings known as Benildus Hall, Onate Hall, Driscoll Fitness Center and Garson Studios (collectively, the "**Buildings**"), and all other existing accessory structures and improvements located thereon, and rights of egress across adjacent roadways, located within in the Midtown Site and generally depicted on Exhibit B-1.

1.155 "**Proposed Project**" is defined in Recital E above.

1.156 "**Purchase Price**" is defined in Section 4.1.

1.157 "**QOF**" is defined in Recital E above.

1.158 "**Qualified Expenditures**" is defined in Section 11.1.

1.159 "**Qualified New Mexico Film School**" means any of the following: (a) a state authorized (in accordance with the Post-Secondary Educational Institution Act) or publicly-funded academic, vocational, technical, business, professional, or other post-secondary or other organization or Person offering or purporting to offer a curriculum that includes courses, instruction, training, or education in film and/or television production from a physical site in New Mexico; or (b) a nonprofit organization having a principal office in New Mexico that provides training and or academic curriculum in the film industry in partnership with a New Mexico-based film trade union.

1.160 "**Qualified New Mexico Internship Program**" means an internship program based in the State of New Mexico that offers on-the-job training to individuals pursuing or considering a career in the film or television industry.

1.161 "**Quarterly Construction Report**" is defined in Section 17.1.1.

1.162 "**Report**" is defined in Section 17.1.1.

1.163 "**Required Uses**" is defined in Section 6.1

1.164 "**Residential Project**" is defined in Section 7.2.

1.165 "**Response Deadline**" is defined in Section 10.5.3.

1.166 "**Response Notice**" is defined in Section 10.5.3.

1.167 "**Right of Way Plans**" is defined in Section 8.1.

1.168 "**Right of Way Schedule**" is defined in Section 8.2.

1.169 "**Shellaberger Property**" means the real property and improvements owned by Developer or an Affiliate of Developer and located at 1954 Siringo Road, Santa Fe, New Mexico 87505.

1.170 "**Solar Facilities**" is defined in Section 7.2.

1.171 "**Studio RFP**" is defined in Recital D above.

1.172 "**Survey**" is defined in Section 10.5.2.

1.173 "**Term**" is defined in Section 2.2.

1.174 "**Termination Event**" is defined in Section 18.2.1(b).

1.175 "**The Screen**" means the 165-seat theater located within the building known as Garson Studios.

1.176 "**TIF District**" is defined in Section 11.9.

1.177 "**Title Commitment**" is defined in Section 10.5.2.

1.178 "**Title Company**" is defined in Section 10.1.

1.179 "**Title Documents**" is defined in Section 10.5.2.

1.180 "**Title Objections**" is defined in Section 10.5.3.

1.181 "**Title Policy**" is defined in Section 10.5.2.

1.182 "**Title Receipt Deadline**" is defined in Section 10.5.2.

1.183 "**Transfer**" is defined in Section 15.1.

1.184 "**Uncontrollable Events**" means the occurrence of any (a) Force Majeure Event, (b) delay caused by Developer Parties, including Developer Parties' interference or failure to cooperate with the City's design and construction of the Midtown ROW Improvements, and/or (c) insufficiency of appropriations or authorizations as set forth in Section 20.29, that adversely impacts the ability of the City to complete any portion of the Project ROW Improvements.

1.185 "**Utilities**" is defined in Section 8.6.2.

1.186 "**Utilities Agreement**" is defined in Section 8.6.2.

ARTICLE 2
EFFECTIVE DATE; TERM OF AGREEMENT

2.1 Effective Date. This Agreement shall become effective on the date that is 45 days after the Governing Body adopts an ordinance approving this Agreement (the "**Effective Date**"); provided, however, if a referendum election is held, as required by Section 3-54-1, NMSA 1978, the Effective Date shall be suspended pending the outcome of the referendum election. If the results of the election are in favor of this Agreement, the Effective Date will commence on the date of the certification of a favorable election. If the referendum election results are against this Agreement, this Agreement shall be immediately null and void. Notwithstanding the foregoing, if the City has not recorded a new plat map to subdivide the Property into parcels (the "**Plat**") in the real property records of the Clerk's Office of Santa Fe County, New Mexico ("**Official Records**") prior to the Effective Date, the Effective Date shall be suspended until the recording date of the Plat.

2.2 Term. The term of this Agreement (the "**Term**") shall commence upon the Effective Date and shall continue until the earlier of (i) the expiration of the Lease, (ii) the consummation of the Phase 3 Conveyance, or (iii) the City's notice of termination pursuant to Article 18, provided that the provisions of Article 11 shall continue in effect for the duration of the terms set forth therein.

2.3 Lease. Concurrently herewith, the City and Developer shall enter into the Lease on the form attached hereto as Exhibit C, pursuant to which the City will lease the Property to Developer during the Lease Term for Developer to access, construct and operate the Project, all on the terms and conditions set forth herein and in the Lease.

2.4 Furniture, Fixtures & Equipment. As of the Effective Date, for good and valuable consideration forming a portion of the Initial Deposit, the sufficiency of which is hereby acknowledged, the City hereby conveys to Developer all furniture, fixtures and equipment located within or affixed to any Building at the Property.

ARTICLE 3
DEVELOPER REPRESENTATIONS, WARRANTIES AND COVENANTS

From and after the Effective Date, Developer represents and warrants to the City that:

3.1 Developer is a limited liability company duly organized, validly existing and in good standing under the laws of the State of Delaware, and has its principal office at 1954 Siringo Road, Santa Fe, New Mexico 87505. Developer is in good standing under the laws of the state of New Mexico.

3.2 Developer has full power and authority to execute, deliver and perform its obligations under this Agreement, and has taken all required entity actions and obtained all required approvals therefor, if any, and no other approvals or consents not obtained by Developer as of the Effective Date are necessary in connection with Developer's execution of or performance of obligations under this Agreement.

3.3 The individual signing this Agreement on behalf of Developer is authorized to sign this Agreement on Developer's behalf and to bind Developer hereto, and this Agreement is binding upon and enforceable against Developer in accordance with its terms.

3.4 The execution and delivery of this Agreement, the consummation of the transactions contemplated hereby, and Developer's compliance with the terms and conditions of this Agreement will not violate the terms of Developer's certificate of formation or limited liability company agreement (collectively, the "**Governance Documents**"), true and complete copies of which have been provided to the MRA Director prior to the Effective Date, or conflict with or result in a breach of any of the terms, conditions, or provisions of any restriction, agreement, or any instrument to which Developer is a party or by which it is bound, nor will it result in the creation or imposition of any prohibited lien, charge, or encumbrance of any nature whatsoever upon the Property or the Project, except for any permitted encumbrances.

3.5 Developer shall not amend or change its Governance Documents, including the addition of members or partners, in any manner that would conflict with or result in a breach of the terms of this Agreement.

3.6 Neither Developer nor Developer's Principal has (a) made a general assignment for the benefit of creditors, (b) filed for any voluntary petition in bankruptcy or, to Developer's knowledge, suffered the filing of an involuntary petition by Developer's creditors, (c) suffered the appointment of a receiver to take possession (or the attachment or other judicial seizure) of all, or substantially all, of such Person's assets, (d) admitted in writing its inability to pay its debts as they generally come due or (e) made an offer of settlement, extension or composition to its creditors generally.

3.7 There are no legal actions or proceedings pending or, to Developer's knowledge, threatened against Developer which would, if adversely determined, have a material adverse effect on Developer or the ability of Developer to perform its obligations under this Agreement.

3.8 Neither any member of the Governing Body nor any officer or employee of the City has any direct, indirect, legal, or beneficial interest in Developer, the Project, this Agreement or in any contract or agreement between the City and Developer or in any franchise, concession, right or privilege of any nature granted by the City to Developer in this Agreement.

3.9 Developer is not a Prohibited Person.

3.10 This Agreement is entered into by Developer without collusion on the part of Developer with any Person, without fraud and in good faith.

3.11 No gratuities, in the form of entertainment, gifts or otherwise, were, or during the Term of this Agreement, will be offered or given by Developer or any agent or representative of Developer to any officer or employee of the City with a view towards securing this Agreement or for securing more favorable treatment in connection with any matter hereunder for which a determination or performance invokes the City's discretion.

3.12 All members and officers of Developer, as well as all Persons (or their principals) holding an interest in any member of Developer, are set forth on Exhibit D attached hereto, and Developer shall provide the City with written notification of any change of Control of Developer within 30 days after any such change through the Term of this Agreement.

3.13 Developer has sufficient funds to enable Developer to develop and complete the construction of the Phase 1 Improvements and pay all fees and expenses necessary or related thereto, and prior to the commencement of construction of the Phase 2 Improvements and Phase 3 Improvements, Developer shall have sufficient funds and/or binding commitments from third parties to provide such funds to enable Developer to develop and complete the Phase 2 Improvements and Phase 3 Improvements and to pay all fees and expenses necessary or related thereto.

ARTICLE 4
PROJECT CONSIDERATION

4.1 Consideration. The purchase price for the Property (the "**Purchase Price**") to be paid by Developer to the City is $5,000,000.00. The Purchase Price, subject to the prorations and adjustments as provided in Article 10, shall be payable by Developer in immediately available funds as follows:

4.1.1 *Initial Deposit*. A portion of the Purchase Price in the amount of $1,000,000.00 (the "**Initial Deposit**") shall be payable in full on the Effective Date. The Initial Deposit shall be nonrefundable to Developer, except in the event Developer terminates this Agreement in accordance with Section 6.1 (Master Plan Amendment) or Section 18.6 (City Default).

4.1.2 *Phase 1 Purchase Installment*. A portion of the Purchase Price in the amount of $2,250,000 (the "**Phase 1 Purchase Installment**") shall be payable in full at the Phase 1 Closing.

4.1.3 *Phase 2 Purchase Installment*. A portion of the Purchase Price in the amount of $1,250,000 (the "**Phase 2 Purchase Installment**") shall be payable in full at the Phase 2 Closing.

4.1.4 *Phase 3 Purchase Installment*. A portion of the Purchase Price in the amount of $500,000 (the "**Phase 3 Purchase Installment**") shall be payable in full at the Phase 3 Closing. The Phase 1 Closing, Phase 2 Closing and Phase 3 Closing are referred to herein, collectively, as the "**Closings**" and, individually, as a "**Closing**."

ARTICLE 5
DEVELOPER ROLE; PROJECT APPROVALS AND TIMELINE

5.1 Developer Role. Developer shall be responsible for the overall conceptualization, design, and construction of the Project in accordance with the Final Design Plans and the Applicable Rules. In connection with the foregoing, Developer shall be responsible, at its sole cost and expense, for the entitlement, development, construction, and operation of the Project, including without limitation:

5.1.1 Assembling a Project team with the necessary expertise, experience, and capacity to develop and manage the Project.

5.1.2 Attending and/or facilitating public forums, hearings, and briefings with relevant stakeholders, adjacent neighborhood associations, the Governing Body, elected officials, City agencies, and other organizations as required to obtain the final permits for the Project.

5.1.3 Designing all Private Improvements related to the Project.

5.1.4 Securing all financing for the Project, including horizontal and vertical development and construction cost, acquisition costs, pre-development costs, soft costs, off-site costs, and infrastructure costs.

5.1.5 Preparing, processing and obtaining in a timely manner all required approvals, permits, licenses, and certificate(s) of any Governmental Authorities relating to the development and construction of the Project required under the Applicable Rules (collectively, as applicable, "**Approvals**").

5.1.6 Constructing the Project in accordance with the Approvals, and in compliance with the Project Standards. For purposes of this Agreement, "**Project Standards**" means the general standards of quality for construction, maintenance, operations, security and other activities applicable to the Project's use, in a first class manner consistent with reputable business standards and practices typical of similar projects within the Santa Fe metropolitan area.

5.1.7 Maintaining and operating the Project, including the community benefits set forth in Article 11, in compliance with the Project Standards.

5.1.8 Paying all property taxes and other taxes associated with the Project in accordance with this Agreement and the Lease.

5.2 Phase 1 Plans; Phase 1 Construction Schedule.

5.2.1 *Conceptual Plans*. Developer previously submitted its Conceptual Plans for Phase 1 to the MRA Director in the form attached hereto as Exhibit E (the "**Phase 1 Conceptual Plans**"), which Phase 1 Conceptual Plans have been reviewed by the MRA Director and deemed to be consistent with the Master Plan and Community Development Plan.

5.2.2 *Design Plans*. At least 30 days before Developer submits an application to the City and the State of New Mexico Construction Industries Division (the "**State CID**") for development plan and/or building permit approval for each component of Phase 1, Developer shall deliver to the MRA Director its Preliminary Design Plans for each such component of Phase 1 (the "**Phase 1 Preliminary Component Design Plans**"). The Phase 1 Preliminary Component Design Plans shall be in a format customarily acceptable to the City of Santa Fe Planning and Land Use Department. In addition to the foregoing, Developer shall provide a written affidavit to the City (a) setting forth Developer's estimate, based on Developer's initial modeling, of the total points the Phase 1 Improvements will receive within each of the subcategories designated as 'Required in RFP' on the Project Checklist attached as Appendix A to the Community Development Plan, as such subcategories and point system are further described in the United States Green Building Council (USGBC) Leadership in Environmental and Energy Design: Neighborhood Development (LEED-ND) attached hereto as Exhibit F (the "**LEED Requirements**"), and (b) identifying the fixtures, materials, systems and/or design elements incorporated within the Phase 1 Preliminary Component Design Plans that will cause the Phase 1 Improvements to meet the applicable LEED Requirements (i.e., those applicable to existing buildings and/or major renovation, as applicable) and which form the basis for Developer's estimate of the point totals for the Phase 1 Improvements. As of the Effective Date, to the City's knowledge, the Buildings known as Garson Studios, Benildus Hall, and Driscoll Hall either conform to the requirements of City Code or are legal nonconforming structures, as such term is defined in Article 14-12 of the City Code. Developer may submit individual Phase 1 Preliminary Component Design Plans for each building or parcel within Phase 1 to the MRA Director and the City or the State

CID, as applicable, and not all components must be completed simultaneously so long as all component submissions have been made by the date that is 120 days after the Effective Date.

5.2.3 *MRA Comments*. The MRA Director shall review each set of Phase 1 Preliminary Component Design Plans for consistency with the Phase 1 Conceptual Plans, the Master Plan and the Community Development Plan, and shall provide to Developer written notice of its approval or disapproval thereof (respectively, as applicable, the "**Preliminary Approval Notice**" or "**Preliminary Disapproval Notice**") within 20 Business Days following receipt of such Phase 1 Preliminary Component Design Plans, provided that any Preliminary Disapproval Notice shall identify the inconsistency or inconsistencies with the Phase 1 Conceptual Plans on which the disapproval is based. Any failure by the MRA Director to timely deliver Preliminary Approval Notice or Preliminary Disapproval Notice will be deemed to constitute the MRA Director's approval of the Phase 1 Preliminary Component Design Plans. If the MRA Director delivers a Preliminary Disapproval Notice, Developer shall revise the Phase 1 Preliminary Component Design Plans accordingly and deliver the Phase 1 Preliminary Component Design Plans, as revised, to the MRA Director for further review, following which the Preliminary Approval Notice or Preliminary Disapproval Notice and revision procedure detailed above shall continue until the MRA Director has delivered a Preliminary Approval Notice with respect to the Phase 1 Preliminary Component Design Plans (the "**Phase 1 MRA-Approved Component Design Plans**").

5.2.4 *Final Plans*. Any revisions to the Phase 1 MRA-Approved Component Design Plans required for approvals by the City in connection with any site improvements (other than vertical improvements) or by the State CID or other applicable Governmental Authorities in connection with the design or construction of the vertical improvements shall be incorporated into and made a part of the Phase 1 MRA-Approved Component Design Plans, without further approval of the MRA Director being required, and the Phase 1 MRA-Approved Component Design Plans, as revised and approved by the City or the State CID, as applicable, shall hereinafter be referred to as the "**Phase 1 Component Final Design Plans**."

5.2.5 *Development Approvals*. Developer acknowledges that Chapter 14 of the City Code sets forth certain review and approval requirements applicable to the Phase 1 Improvements which are not within the State CID's jurisdiction or authority pursuant to the Construction Industries Licensing Act, Chapter 60, Article 13, NMSA 1978 and Chapter 5, Title 14, N.M. Admin Code (collectively, the "**CIL Rules**"), including but not limited to zoning compliance and compliance with City Code provisions applicable to grading, landscaping, lighting, pedestrian and vehicular circulation, parking, infrastructure serving the site, and open space. Developer shall be required to complete the City review and approval process for each of the foregoing matters. Prior to submission of any application to the State CID for building permits in connection with the construction of the Phase 1 Improvements, Developer shall obtain a letter from the City Planning and Land Use Department confirming that the Phase 1 Component Final Design Plans comply with said regulations, and Developer acknowledges that Developer is not entitled to commence construction of the Phase 1 Improvements until Developer has obtained such letter.

5.2.6 *Inspection Approvals*. Developer shall not be deemed to have achieved Final Completion until such time as the City and State CID have inspected and approved the construction or installation of the Phase 1 Improvements for which the City or State CID, as applicable, approved the plans pursuant to Section 5.2.5, as the Phase 1 Improvements (or the applicable portion thereof) that correspond to such plans are completed. For the avoidance of doubt, the City's approval of plans shall

not be required for the issuance by the State CID of a temporary or permanent certificate of occupancy, but shall be required for Final Completion.

5.2.7 *Building Permit Submission Date*. Developer shall submit for building permits and all other Approvals for the Phase 1 Improvements (including each component thereof) no later than 30 days after the approval of the Phase 1 MRA-Approved Component Design Plans by all applicable Governmental Authorities ("**Phase 1 Building Permit Submission Date**").

5.2.8 *Commencement of Construction*. Developer shall Commence Construction for each component of Phase 1 within 45 days after Developer receives its building permit and zoning approval for said component. The date on which Developer is obligated to Commence Construction with respect to the first building permit obtained for Phase 1 is referred to herein as the "**Phase 1 Commencement Date**." Subject to the foregoing, Developer reserves the right to Commence Construction for components of Phase 1 at different times, and no provision hereof shall be construed to require Developer to commence all components of Phase 1 simultaneously. Notwithstanding the foregoing, if Developer has submitted applications for building permits to State CID in accordance with Section 5.2.7 prior to Developer's receipt of zoning approval from the City, but has not obtained zoning approval from the City despite commercially reasonable efforts to secure such approval, then Developer shall not be required to Commence Construction until such approval is granted so long as Developer diligently and continuously pursues such approvals.

5.2.9 *Completion of Construction*. Developer shall achieve substantial completion of the Phase 1 Improvements (as shall be evidenced by the issuance and receipt of applicable temporary or conditional certificates of occupancy therefor) on or before the first anniversary of the Phase 1 Commencement Date.

5.3 Phase 2 Plans; Phase 2 Construction Schedule.

5.3.1 *Conceptual Plans.* No later than nine months after the Effective Date, Developer shall deliver to the MRA Director its Conceptual Plans for Phase 2 (the "**Phase 2 Conceptual Plans**"). The MRA Director will have 20 Business Days after its receipt of the Phase 2 Conceptual Plans to review the same consistency with the requirements of this Agreement, the Master Plan and the Community Development Plan and deliver to Developer either a Preliminary Approval Notice or a Preliminary Disapproval Notice (which shall set forth the inconsistency or inconsistencies identified in the Phase 2 Conceptual Plans on which the MRA Director's disapproval is based). Any failure by the MRA Director to timely deliver a Preliminary Approval Notice or Preliminary Disapproval Notice will be deemed to constitute the MRA's approval of the Phase 2 Conceptual Plans. If the MRA Director delivers a Preliminary Disapproval Notice, Developer shall revise the Phase 2 Conceptual Plans accordingly and deliver the Phase 2 Conceptual Plans, as revised, to the MRA Director for further review, following which the Preliminary Approval Notice or Preliminary Disapproval Notice and revision procedure detailed above shall continue until the MRA Director has delivered a Preliminary Approval Notice with respect to the Phase 2 Conceptual Plans (the "**Phase 2 MRA-Approved Conceptual Plans**").

5.3.2 *Preliminary Design*. At least 30 days before Developer submits an application to the City or the State CID for development plan and/or building permits, Developer shall submit to the MRA Director Preliminary Design Plans for Phase 2 that are consistent with the Phase 2 MRA-Approved Conceptual Plans (the "**Phase 2 Preliminary Design Plans**"). Developer shall also provide a written affidavit to the City written affidavit to the City (a) setting forth Developer's estimate, based

on Developer's initial modeling, of the total points the Phase 2 Improvements will receive within each of the subcategories comprising the LEED Requirements, and (b) identifying the fixtures, materials, systems and/or design elements incorporated within the Phase 2 Preliminary Design Plans that will cause the Phase 2 Improvements to meet the applicable LEED Requirements and which form the basis for Developer's estimate of the point totals for the Phase 2 Improvements. Developer shall submit Phase 2 Preliminary Design Plans to the City or the State CID, as applicable, for approval on or before the first anniversary of the Effective Date.

5.3.3 *MRA Comment*. The MRA Director will have 20 Business Days following receipt from Developer to review the Phase 2 Preliminary Design Plans for consistency with the Phase 2 MRA-Approved Conceptual Plans and deliver to Developer either a Preliminary Approval Notice or a Preliminary Disapproval Notice, provided that any Preliminary Disapproval Notice shall identify the inconsistency or inconsistencies with the Phase 2 Preliminary Design Plans on which the disapproval is based. Any failure by the MRA Director to timely deliver a Preliminary Approval Notice or Preliminary Disapproval Notice will be deemed to constitute the MRA's approval of the Phase 2 Preliminary Design Plans. If the MRA Director delivers a Preliminary Disapproval Notice, Developer shall use commercially reasonable efforts to incorporate the MRA Director's comments into the Phase 2 Preliminary Design Plans in its next submission of the same to the City. Such submission shall be referred to herein as the "**Phase 2 MRA-Approved Design Plans**."

5.3.4 *Final Plans*. Any revisions to the Phase 2 MRA-Approved Design Plans required for approvals by the City in connection with any site improvements (other than vertical improvements) or by the State CID or other applicable Governmental Authorities in connection with the design or construction of the vertical improvements shall be incorporated into and made a part of the Phase 2 MRA-Approved Design Plans, without further approval of the MRA Director being required, upon which the Phase 2 MRA-Approved Design Plans, as revised and approved by the City, shall be referred to as the "**Phase 2 Final Design Plans**."

5.3.5 *Development Approvals*. Developer acknowledges that Chapter 14 of the City Code sets forth certain review and approval requirements applicable to the Phase 2 Improvements which are not within the State CID's jurisdiction or authority pursuant to the CIL Rules, including but not limited to zoning compliance and compliance with City Code provisions applicable to grading, landscaping, lighting, pedestrian and vehicular circulation, parking, infrastructure serving the site, and open space. Developer shall be required to complete the City review and approval process for each of the foregoing matters. Prior to submission of any application to the State CID for building permits in connection with the construction of the Phase 2 Improvements, Developer shall obtain a letter from the City Planning and Land Use Department confirming that the Phase 2 Final Design Plans comply with said regulations, and Developer acknowledges that Developer is not entitled to commence construction of the Phase 2 Improvements until Developer has obtained such letter.

5.3.6 *Inspection Approvals*. Developer shall not be deemed to have achieved Final Completion until such time as the City and State CID have inspected and approved the construction or installation of the Phase 2 Improvements for which the City or State CID, as applicable, approved the plans pursuant to Section 5.3.5, as the Phase 2 Improvements (or the applicable portion thereof) that correspond to such plans are completed. For the avoidance of doubt, the City's approval of plans shall not be required for the issuance by the State CID of a temporary or permanent certificate of occupancy, but shall be required for Final Completion.

5.3.7 *Building Permit Submission Date*. Developer shall submit for building permit and development plan approval for the Phase 2 Improvements no later than 60 days after the approval of the Phase 2 MRA-Approved Design Plans by all applicable Governmental Authorities (the "**Phase 2 Building Permit Submission Date**").

5.3.8 *Commencement of Construction*. Developer shall Commence Construction for each component of Phase 2 within 45 days after Developer receives its building permit and zoning approval for Phase 2. The date on which Developer is obligated to Commence Construction with respect to the first building permit obtained for Phase 2 is referred to herein as the "**Phase 2 Commencement Date**." Notwithstanding the foregoing, if Developer has submitted applications for building permits to State CID in accordance with Section 5.3.7 prior to Developer's receipt of zoning approval from the City, but has not obtained zoning approval from the City despite commercially reasonable efforts to secure such approval, then Developer shall not be required to Commence Construction until such approval is granted so long as Developer diligently and continuously pursues such approvals.

5.3.9 *Completion of Construction*. Developer shall achieve substantial completion of the Phase 2 Improvements (as shall be evidenced by the issuance and receipt of applicable temporary or conditional certificates of occupancy therefor) on or before the date that is 18 months after the Phase 2 Commencement Date.

5.4 Phase 3 Plans; Phase 3 Construction Schedule.

5.4.1 *Conceptual Plans.* No later than 27 months after the Effective Date, Developer shall deliver to the MRA Director the Conceptual Plans for Phase 3 (the "**Phase 3 Conceptual Plans**"). The MRA Director will have 15 Business Days after its receipt of the Phase 3 Conceptual Plans to review the same consistency with the requirements of this Agreement, the Master Plan and the Community Development Plan and deliver to Developer either a Preliminary Approval Notice or a Preliminary Disapproval Notice (which shall set forth the inconsistency or inconsistencies identified in the Phase 3 Conceptual Plans on which the MRA Director's disapproval is based). Any failure by the MRA Director to timely deliver a Preliminary Approval Notice or Preliminary Disapproval Notice will be deemed to constitute the MRA Director's approval of the Phase 3 Conceptual Plans. If the MRA Director delivers a Preliminary Disapproval Notice, Developer shall revise the Phase 3 Conceptual Plans accordingly and deliver the Phase 3 Conceptual Plans, as revised, to the MRA Director for further review, following which the Preliminary Approval Notice or Preliminary Disapproval Notice and revision procedure detailed above shall continue until the MRA Director has delivered a Preliminary Approval Notice with respect to the Phase 3 Conceptual Plans (the "**Phase 3 MRA-Approved Conceptual Plans**").

5.4.2 *Preliminary Design*. At least 30 days before Developer submits an application to the City and the State CID for development plan and/or building permit, Developer shall submit to the MRA Director the Preliminary Design Plans for Phase 3 that are consistent with the Phase 3 MRA-Approved Conceptual Plans (the "**Phase 3 Preliminary Design Plans**"). Developer shall also provide a written affidavit to the City (a) setting forth Developer's estimate, based on Developer's initial modeling, of the total points the Phase 3 Improvements will receive within each of the subcategories comprising the LEED Requirements, and (b) identifying the fixtures, materials, systems and/or design elements incorporated within the Phase 3 Preliminary Design Plans that will cause the Phase 3 Improvements to meet the applicable LEED Requirements and which form the basis for Developer's

estimate of the point totals for the Phase 3 Improvements. Developer shall submit Phase 3 Preliminary Design Plans to the City or the State CID, as applicable, for approval no later than 33 months after the Effective Date.

5.4.3 *MRA Comment*. The MRA Director will have 20 Business Days following receipt from Developer to review the Phase 3 Preliminary Design Plans for consistency with the Phase 3 MRA-Approved Conceptual Plans and deliver to Developer either a Preliminary Approval Notice or a Preliminary Disapproval Notice, provided that any Preliminary Disapproval Notice shall identify the inconsistency or inconsistencies with the Phase 3 Preliminary Design Plans on which the disapproval is based. Any failure by the MRA Director to timely deliver a Preliminary Approval Notice or Preliminary Disapproval Notice will be deemed to constitute the MRA's approval of the Phase 3 Preliminary Design Plans. If the MRA Director delivers a Preliminary Disapproval Notice, Developer shall use commercially reasonable efforts to incorporate the MRA Director's comments into the Phase 3 Preliminary Design Plans in its next submission of the same to the City. Such submission shall be referred to herein as the "**Phase 3 MRA-Approved Design Plans**."

5.4.4 *Final Plans*. Any revisions to the Phase 3 MRA-Approved Design Plans required for approvals by the City in connection with any site improvements (other than vertical improvements) or by the State CID or other applicable Governmental Authorities in connection with the design or construction of the vertical improvements shall be incorporated into and made a part of the Phase 3 MRA-Approved Design Plans, without further approval of the MRA Director being required, and the Phase 3 MRA-Approved Design Plans, as revised and approved by the City, shall hereinafter be referred to as the "**Phase 3 Final Design Plans**."

5.4.5 *Development Approvals*. Developer acknowledges that Chapter 14 of the City Code sets forth certain review and approval requirements applicable to the Phase 3 Improvements which are not within the State CID's jurisdiction or authority pursuant to the CIL Rules, including but not limited to zoning compliance and compliance with City Code provisions applicable to grading, landscaping, lighting, pedestrian and vehicular circulation, parking, infrastructure serving the site, and open space. Developer shall be required to complete the City review and approval process for each of the foregoing matters. Prior to submission of any application to the State CID for building permits in connection with the construction of the Phase 3 Improvements, Developer shall obtain a letter from the City Planning and Land Use Department confirming that the Phase 3 Final Design Plans comply with said regulations, and Developer acknowledges that Developer is not entitled to commence construction of the Phase 3 Improvements until Developer has obtained such letter.

5.4.6 *Inspection Approvals*. Developer shall not be deemed to have achieved Final Completion until such time as the City and State CID have inspected and approved the construction or installation of the Phase 3 Improvements for which the City or State CID, as applicable, approved the plans pursuant to Section 5.4.5, as the Phase 3 Improvements (or the applicable portion thereof) that correspond to such plans are completed. For the avoidance of doubt, the City's approval of plans shall not be required for the issuance by the State CID of a temporary or permanent certificate of occupancy, but shall be required for Final Completion.

5.4.7 *Building Permit Submission Date*. Developer shall submit for building permit and development plan approval for Phase 3 Improvements no later than 60 days after the approval of the Phase 3 MRA-Approved Design Plans by all applicable Governmental Authorities.

5.4.8 *Commencement of Construction*. Developer shall Commence Construction for Phase 3 no later than 45 days after Developer receives its first building permit and zoning approval for Phase 3. The date on which Developer is obligated to Commence Construction with respect to Phase 3 is referred to herein as the "**Phase 3 Commencement Date**." Notwithstanding the foregoing, if Developer has submitted applications for building permits to State CID in accordance with Section 5.4.7 prior to Developer's receipt of zoning approval from the City, but has not obtained zoning approval from the City despite commercially reasonable efforts to secure such approval, then Developer shall not be required to Commence Construction until such approval is granted so long as Developer diligently and continuously pursues such approvals.

5.4.9 *Completion of Construction*. Developer shall achieve substantial completion of the Phase 3 Improvements (as shall be evidenced by the issuance and receipt of applicable temporary or conditional certificates of occupancy therefor) on or before the date that is 18 months after the Phase 3 Commencement Date.

5.5 Defects in Plans. Developer acknowledges and agrees that neither the City, the MRA nor or any department, governing body, commission, agency, official, officer, employee, agent, representative or volunteer of the City or the MRA (collectively, the "**City Parties**") has made any representation or warranty, through this Agreement or otherwise, concerning the condition of the Property or the sufficiency of the development plans for any purpose, and no such City Parties shall be responsible either to Developer or to third parties in any way for defects in any development plans approved by any of the City Parties, nor for any structural, environmental or other defects in any work performed pursuant thereto. Developer, on behalf of itself and its successors and assigns, hereby waives and releases any claims, encumbrances, liens, demands, suits, judgments, proceedings, damages, losses, liabilities, penalties, fines, costs and expenses (including reasonable attorneys' fees and court costs) of any kind or nature (collectively, "**Liabilities**") against the City Parties for any monetary damages or compensation as a result of defects in such plans, including the violation of any laws or regulations, and for defects in any work done according to the such plans. The provisions of this Section shall survive any expiration or termination of this Agreement.

5.6 Cooperation with the City. Developer shall provide the MRA Director with copies of all applications for rezoning, site plans, any changes thereto, and any Approvals relating thereto made by or obtained from any Governmental Authorities with respect to the Property, the Private Improvements, and the Project.

ARTICLE 6
CONDITIONS PRECEDENT TO COMMENCEMENT OF CONSTRUCTION

6.1 Master Plan Amendment. Developer acknowledges that as of the Effective Date (a) the permitted uses for the parcels comprising Phase 1 include film related uses as existing nonconforming uses, but the Master Plan does not include film and multi-media production, cinema or supportive retail as permitted uses, and any development of Phase 1 for film and multi-media production, cinema or supportive retail uses is contingent upon the adoption of an amendment to the Master Plan approving such uses, (b) residential use is identified as an accessory use under the Master Plan, and any development of Phase 2 that includes a residential component that is not an accessory use is contingent upon the adoption of an amendment to the Master Plan approving such uses, and (c) the permitted uses under the Master Plan for the parcel(s) comprising Phase 3 do not include film and multi-media production and light industrial, and any development of Phase 3 for film and multi-media

production and/or light industrial use is contingent upon the adoption of an amendment to the Master Plan approving such uses. No later than 60 days after the Effective Date, Developer shall, at its sole cost and expense, prepare and deliver to the MRA Director, a draft application for an amendment to the Master Plan (the "**Master Plan Amendment**"), together with all documents and information required to be submitted for the Governing Body's consideration thereof, which provides for (i) the modifications to the permitted uses and ancillary uses for the Properties set forth on Exhibit N attached hereto (the "**Required Uses**"), and (ii) such additional modifications to the Master Plan in connection with the Project as Developer may reasonably request ("**Discretionary Modifications**"). Within 10 Business Days after the MRA Director's receipt of the draft application, the MRA Director shall review the draft application and deliver written notice to Developer either of the MRA Director's approval of the draft application or of any modifications required by the MRA Director (including, to the extent necessary, any supplemental or clarifying information required for Developer to implement the same). Developer acknowledges that the MRA Director may reject or change any Discretionary Modifications or require any additional modifications as the MRA Director determines in its sole discretion, provided that Developer's approval shall be required for any modifications that would further restrict the Required Uses or otherwise impose any additional obligations on Developer or reduce any rights of Developer, in any material respect, which are not provided for in this Agreement. Subject to the foregoing provision, within five Business Days after receipt of the MRA Director's required modifications, Developer shall incorporate the same and deliver an updated draft application to the MRA Director, and said review and approval or modification process shall be repeated until such time as the MRA Director approves the draft application (the "**Final Application**"). The Governing Body hereby authorizes and empowers the MRA Director to submit, or cause Developer (acting as agent on behalf of the MRA) to submit, the Final Application to the City Planning and Land Use Department for its review and recommendation. If, at the conclusion of the City's review of and decision concerning the Master Plan Amendment, the Governing Body issues a final action either denying the proposed Master Plan Amendment or approving or conditionally approving the Master Plan Amendment with modifications to the form that eliminate, limit or modify the Required Uses in a manner that materially adversely affects Developer's ability to develop and operate the Project consistent with the Required Uses, then on or before the date that is 30 days after the effective date of the Governing Body's final action, Developer may terminate this Agreement by delivering written notice of termination to the City, upon which the Lease shall automatically terminate, the City shall refund Developer's Initial Deposit and, except for the provisions which expressly survive termination, neither Party shall have any further rights or obligations under this Agreement. Developer shall be responsible for all costs related to the preparation and submission of the amendment to the Master Plan. For the avoidance of doubt, nothing in this Section 6.1 shall, at any time prior to the applicable Construction Commencement, operate to terminate or modify Developer's right to continue to operate Developer's business for film studio uses in the Buildings in their current existing nonconforming status.

6.2 Phase 1 Condition Precedent. To secure Developer's completion of the Phase 1 Improvements, as a condition precedent to Construction Commencement for the Phase 1 Improvements, Developer shall provide to the City or its designee (a) such documentation as the City or its designee may reasonably require, including, without limitation, financial statements (i.e., balance sheet, a statement of income, and contingent obligations in each case prepared in accordance with generally accepted accounting principles, consistently applied (collectively, "**Financial Statements**")), of Developer and Developer's Principal, subscription agreements or similar agreements obligating Developer's equity owners to make capital contributions to Developer and/or a

legally binding, firm loan commitment made to Developer, and the total project construction budget, in order to determine that Developer has secured available funds in an amount sufficient to complete Phase 1 in accordance with the Phase 1 Component Final Design Plans (i.e., evidence of debt and equity commitments at least equal to the total project construction budget), and (b) a personal payment and performance guaranty from Developer's Principal in an amount equal to the cost to complete the Phase 1 Improvements in accordance with the Phase 1 Component Final Design Plans, in the form attached hereto as Exhibit G-1 (a "**Guaranty**").

6.3 Phase 2 Conditions Precedent. To secure Developer's completion of the Phase 2 Improvements, as a condition precedent to Construction Commencement for the Phase 2 Improvements, Developer shall provide to the City or its designee (a) such documentation as the City or its designee may reasonably require, including, without limitation, Financial Statements of Developer and Developer's Principal, subscription agreements or similar agreements obligating Developer's equity owners to make capital contributions to Developer and/or a legally binding, firm loan commitment made to Developer, and the total project construction budget, in order to determine that Developer has secured available funds in an amount sufficient to complete Phase 2 in accordance with the Phase 2 Final Design Plans (i.e., evidence of debt and equity commitments at least equal to the total project construction budget), and (b) a cash bond or a bond from a surety licensed in the State of New Mexico, each (i) substantially in the form required by the City under then-current City standards (i.e., as of the date civil plans are approved for the applicable improvement) to secure the performance of the applicable obligation hereunder, and (ii) on a form substantially similar to the form of bond attached hereto as Exhibit G-2 (as applicable, a "**Bond**"), which Bond shall be in an amount equal to the cost to complete the Phase 2 Improvements in accordance with the Phase 2 Final Design Plans.

6.4 Phase 3 Conditions Precedent. To secure Developer's completion of the Phase 3 Improvements, as a condition precedent to Construction Commencement for the Phase 3 Improvements, Developer shall provide to the City or its designee (a) such documentation as the City or its designee may reasonably require, including, without limitation, Financial Statements of Developer and Developer's Principal, subscription agreements or similar agreements obligating Developer's equity owners to make capital contributions to Developer and/or a legally binding, firm loan commitment made to Developer, and the total project construction budget, in order to determine that Developer has secured available funds in an amount sufficient to complete Phase 3 in accordance with the Phase 3 Final Design Plans (i.e., evidence of debt and equity commitments at least equal to the total project construction budget), and (b) a Bond in an amount equal to the cost to complete the Phase 3 Improvements in accordance with the Phase 3 Final Design Plans.

Within five Business Days after the MRA Director's receipt of documentation in form and substance sufficient for the MRA Director to reasonably determine that Developer has satisfied the foregoing conditions precedent with respect to the applicable Phase, the MRA Director shall deliver to Developer a Notice to Proceed for such Phase.

ARTICLE 7
PRIVATE IMPROVEMENTS

7.1 Phase 1 Improvements. As part of Developer's obligations for Phase 1, Developer shall cause the Final Completion of the following work and improvements with a minimum investment

of not less than $5,000,000.00 in actual out-of-pocket expenditures, as evidenced by such documentation as the City may reasonably require (collectively, the "**Phase 1 Improvements**"):

7.1.1 the demolition or deconstruction of the existing building known as Onate Hall;

7.1.2 the disconnection of Garson Studios, Driscoll Hall, and the adjacent Shellaberger Property from the Midtown PNM electrical system and the construction and completion of the Aspect Electrical Loop pursuant to Exhibit H;

7.1.3 the construction and/or installation of all landscaping, signage, wayfinding, fencing, parking, and pedestrian circulation infrastructure, as applicable, set forth on Exhibit E;

7.1.4 the installation of (i) bicycle storage fixtures/facilities near the primary entrance of each building equal to or exceeding the minimum requirements set forth in the Master Plan, (ii) a minimum of two 'Level 3' charging facilities and two 'Level 2' charging facilities for electric vehicles and bicycles, each of which shall be operable and accessible to the public for at least 20 years; and

7.1.5 the construction of major renovations to Benildus Hall, Garson Studios, and Driscoll Hall necessary to operate the Project as a state-of-the-art film production studio and related office space, including without limitation:

(a) with respect to Garson Studios, the construction and installation of (i) The Screen theater renovations and all public accessibility renovations required by the Applicable Rules for such space to be available for public use as a movie theater or performance space, (ii) all demising improvements required to separate The Screen theater area (which will be accessible to the public) from the film production studio spaces, and (iii) the façade improvements according to the requirements set forth on Exhibit E, to the extent permitted by the Applicable Rules;

(b) with respect to Driscoll Hall, to the extent permitted under the Master Plan Amendment, the construction of a portion of the first floor having storefront exposure along the street frontage and consisting of no less than 2,000 rentable square feet for retail sales and services or food and beverage (restaurant) use (the "**Driscoll Retail Space**"), which Driscoll Retail Space shall, following execution of a lease and/or completion of tenant improvements, if applicable, be open for service to the general public at all times during normal business hours (subject to such customary exceptions as Developer may determine); and

(c) the issuance of temporary or permanent certificates of occupancy for each such Building.

7.2 Phase 2 Improvements. Prior to the Phase 2 Conveyance, Developer shall cause the Final Completion of: (a) the Residential Project, (b) the Solar Facilities, and (c) all landscaping, private utility facilities and other infrastructure and improvements required by the Applicable Rules (collectively, the "**Phase 2 Improvements**"). For purposes hereof, "**Residential Project**" means the multifamily residential building to be constructed on Phase 2 by Developer consisting of no less than 99 and no more than 150 dwelling units, of which (i) no less than 15% of said units will be accessible and affordable pursuant to the City's inclusionary housing program and in compliance with City Code Section 26-1, and (ii) no more than 15% of the total residential units may be reserved for occupancy by film production personnel; and "**Solar Facilities**" means the photovoltaic systems to be installed

on the roof (or such other location as may be set forth in the plans) of each building on Phase 2 and Phase 3, as applicable, for the purpose of generating electricity to serve such buildings, which systems shall (a) cover a minimum of 40% of the total square footage of each such roof, or (b) supply a minimum of 20% of the estimated electric demand for such building, as determined in Developer's discretion.

7.3 Phase 3 Improvements. Prior to the Phase 3 Conveyance, Developer shall cause the Final Completion of the construction of: (a) either (i) a film and multi-media production studio consisting of no less than 65,000 interior square feet, *or* (ii) subject to the prior approval of the Governing Body (or the MRA commission, when established by the Governing Body), acting in its reasonable discretion, a comparable development project having a use that constitutes a permitted use under the Master Plan (as amended) and is complementary to and supportive of the film and multi-media production uses, provided that Developer shall submit an alternative use proposal concurrently with the Phase 3 Conceptual Plans submission in accordance with Section 5.4.1; (b) the Solar Facilities; and (c) all landscaping, private utility facilities and other infrastructure and improvements required by the Applicable Rules (collectively, as applicable, the "**Phase 3 Improvements**"). No residential development is permitted as part of the Phase 3 Improvements.

7.4 Construction Standard; Other Requirements.

7.4.1 All construction performed in connection with the Project shall be conducted in a good and workmanlike manner, and in compliance with the construction and completion requirements for each Phase of the Project, and in accordance with all Applicable Rules and Project Standards.

7.4.2 Developer shall construct no more than 150 residential units on the Property (inclusive of all lots).

7.5 Site Restoration.

7.5.1 *Removal of Partially Constructed Improvements.* If Developer Abandons construction of the Project, Developer must, within 60 days after receipt by Developer of written notice from the City, either recommence construction on the Project or: (a) remove any partially constructed or partially completed structures or Private Improvements from the applicable Phase; and (b) perform Site Restoration on that portion of the Phase on which Developer has failed to achieve substantial completion of the applicable structures or other Private Improvements or related to the expired building permit, all in accordance with plans approved by the City. For purposes of this Agreement, "**Site Restoration**" means and includes the restoring of the original ground or paved hard surface area in compliance with the Project Standards, and includes but is not limited to the removal or elimination of all debris; the remediation and restoration of any environmental conditions; the elimination of conditions that may create a fire or pollution hazard; the minimization of erosion; and any repair, cleanup, backfilling, compaction, and stabilization, paving and other work necessary to place the site in acceptable condition following the conclusion of the work, or the expiration or revocation of the permit.

7.5.2 *Removal and Restoration by City*. In the event Developer fails or refuses to remove any partially completed Project Improvements, or to perform Site Restoration, as required pursuant to Section 7.5.1, the City will have, and is hereby granted, the right, at its option, to: (i) demolish and/or remove any of the partially completed Private Improvements from any and all portions

of the applicable Phase; (ii) perform Site Restoration; and/or (iii) cause the Private Improvements to be completed in accordance with the applicable final plans. Developer must fully reimburse the City for all costs and expenses, including legal and administrative costs, incurred by the City for such work. If Developer does not so fully reimburse the City, the City will have the right to enforce its rights and remedies under the Bond provided by Developer pursuant to Article 6, as necessary to cause such completion and/or to defray the entire cost of the work, including legal fees and administrative expenses. If Developer does not so fully reimburse the City, and the Bond proceeds are insufficient or otherwise unavailable to finance such work, then the City will have the right to place a lien on the applicable Phase for all such costs and expenses in the manner provided by law. The rights and remedies provided in this Section 7.5 are in addition to, and not in limitation of, any other rights and remedies otherwise available to the City in this Agreement, at law, and/or in equity.

ARTICLE 8
RIGHT OF WAY IMPROVEMENTS

8.1 Right of Way Plans. The City shall engage a third party to prepare the plans, specifications and drawings (the "**Right of Way Plans**") for the development and construction of certain public right of way improvements, storm drainage facilities and related infrastructure within the Midtown Site (the "**Midtown ROW Improvements**"), including, without limitation, the sections of roadway, any related curb and gutter, sidewalk, landscaping and irrigation, water, sewer, stormwater, electrical and other utilities, as applicable, within the areas of the Midtown Site identified as roadway segments 'C.1', 'D.2' and 'D.4' depicted on Exhibit I (the "**Project ROW Improvements**"). The City anticipates that the Right of Way Plans will be complete on or after June 30, 2026. Developer shall provide the final design and construction plans, survey and as-built plans for Developer's proposed PNM electrical loop lying below the Project ROW Improvements, and the City and Developer shall coordinate to ensure the Right of Way Plans are designed to reasonably accommodate the construction of said electrical loop. The City shall make best faith efforts to expedite the completion of the plans prior to June 30, 2026.

8.2 Right of Way Completion. Within 90 days after the City's completion of the Right of Way Plans, the City will provide Developer with a construction schedule, setting forth the anticipated commencement and completion of the applicable portions of the Project ROW Improvements (the "**Right of Way Schedule**"). Subject to extension for Uncontrollable Events, the City will substantially complete, or cause the substantial completion of, the portions of the Project ROW Improvements by the deadlines set forth in the Right of Way Schedule in a manner sufficient to prevent the denial or rejection of the issuance and receipt of applicable temporary or conditional certificates of occupancy for such Phase on the basis of the Project ROW Improvements, subject to Developer's proper application therefor and payment of applicable fees in connection therewith. If the City does not complete the Project ROW Improvements (or applicable portion thereof) by the applicable deadline set forth in the Right of Way Schedule, the City shall have the right to extend the applicable deadline(s) prior to the expiration of the then applicable deadline by delivering written notice to Developer of such election to extend, together with a copy of the updated Right of Way Schedule. An extension of time for any Uncontrollable Event shall commence from the commencement date of the Uncontrollable Event set forth in the City's written notice to Developer of such Uncontrollable Event. After the cessation of any such Uncontrollable Event, the City's obligation to perform shall recommence with a day-for-day delay extension to the applicable deadline. In no event shall any delay in completion of the Project ROW Improvements constitute a default by the City. Upon the City's completion of the Project ROW Improvements required in connection with the temporary or conditional certificates of

occupancy for any Phase, the City shall provide written notice to Developer of such completion. Subject to the provisions of Section 20.29, the City shall make best faith efforts to commence and complete construction prior to the dates set forth in the Right of Way Schedule.

8.3 Cost of Project ROW Improvements. The City shall complete the Project ROW Improvements at its sole cost and expense; provided, however, Developer shall be responsible for 100% of the cost ("**Developer's Share**") for the construction and completion of the section of roadway located immediately adjacent to the real property owned by Developer commonly known as 'The ArtHouse' and depicted on Exhibit I as the 'ArtHouse Frontage' (the "**ArtHouse ROW Improvements**"), which Developer's Share shall be equal to the portion of the total costs to complete the Project ROW Improvements obtained by dividing the total linear footage of the Midtown ROW Improvements by the total linear footage of the 'ArtHouse Frontage'. On or before the later of the date that is 10 days after the City's delivery of written notice to Developer of the estimated amount of Developer's Share of the ArtHouse ROW Improvements (such amount, the "**Escrow Amount**") and the date the City commences construction of the Midtown ROW Improvements, Developer shall deposit into escrow with a title company selected by the City (the "**Escrow Agent**"), the Escrow Amount to be held by the Escrow Agent pursuant to an escrow agreement reasonably acceptable to the City, Developer and the Escrow Agent. Upon completion of the ArtHouse ROW Improvements, the City shall deliver to Developer and the Escrow Agent written notice of the actual amount of Developer's Share of the completed ArtHouse ROW Improvements, and within 10 days following such written notice, the Escrow Agent shall disburse the Escrow Amount to the City, by wire transfer or other good funds as directed by the City. If the actual amount of the Developer's Share is less than the Escrow Amount, the Escrow Agent shall return to Developer the amount remaining in escrow after disbursing the actual Developer's Share to the City. If the actual amount of the Developer's Share is greater than the amount held in escrow, then within 10 days after receipt of the City's written notice of the actual Developer's Share, Developer shall deliver such shortfall directly to the City as instructed in the written notice. At least 30 days prior to the City's commencement of construction of the Midtown ROW Improvements, the City shall deliver to Developer its written estimate of Developer's Share of the ArtHouse ROW Improvements, which shall include the City's total projected budget for the ArtHouse ROW Improvements and the total linear footage of streets included in such construction.

8.4 Coordination; Cooperation. Developer shall cooperate with the City to avoid any interference between the City's construction of the Project ROW Improvements and the Developer's activities on the Property and/or the ArtHouse property. In addition, the City and Developer will coordinate the respective schedules for the City's construction of the Project ROW Improvements and Developer's construction of the roadway improvements for the Project and adjacent ArtHouse project so that the Developer's (or its affiliates) construction commences following the City's construction of the adjacent Midtown ROW Improvements (or roadway portion thereof) in order to maintain elevations, alignment and roadway finish construction consistency. Developer and the City shall meet quarterly to coordinate their respective design and construction activities. If during the City's construction of the Project ROW Improvements it becomes necessary for Developer to move or relocate any permanent or temporary ADA access to any portion of the Property or the ArtHouse property, Developer shall, within 60 days following written notice from the City and at Developer's sole cost and expense, move or relocate such access to an alternative ADA compliant location.

8.5 Ancillary Midtown ROW Improvements; City Delay. Subject to the provisions of Section 20.29, the City agrees to construct the necessary improvements to the Alumni Drive collector road that connects the Midtown Site to Siringo Road and neither Developer nor its affiliates shall be

responsible for the construction or cost of such improvements other than as otherwise provided in this Article 8. In addition, the City acknowledges it will provide access to Benildus Hall for automobile and pedestrian ingress and egress and that, prior to the City's completion of said access, Developer shall construct or install temporary ADA improvements in the locations depicted on plan attached hereto as Exhibit O (the "**Phasing Depiction**") and in accordance with all Applicable Rules. The City acknowledges that Developer may achieve substantial completion of one or more Phases or the ArtHouse development prior to the City's completion of the Midtown ROW Improvements. To the extent any Phase or the ArtHouse development is substantially completed prior to the City's completion of the applicable roadways or sidewalks, then so long as Developer has constructed or installed the temporary applicable ADA improvements in the locations generally shown on the Phasing Depiction and in compliance with all Applicable Rules, including the improvements to and from Alumni Drive in the locations depicted on the Phasing Depiction, the City agrees that it will not pursue any actions that impede the issuance of Developer's temporary certificates of occupancy to the extent Developer would be entitled to such issuance but for the ongoing construction of the applicable roadways or sidewalks in roadways.

8.6 Gas Loop Declaration; Existing Utilities and Utilities Agreement.

8.6.1 Developer acknowledges that the existing natural gas line serving the Midtown Site (the "**Midtown Gas Loop**") is owned and operated by the City of Santa Fe Public Works Department, under procedures, rules and regulations of the New Mexico Public Regulations Commission, Pipeline Safety Bureau, Parts 191 & 192, NMAC 18.60.2, and the Pipeline Safety Act 70-3-10 to 70-3-20 NMSA 1978, 1995 (as may be amended from time to time, the "**Gas Loop Regulations**"). Developer further acknowledges that the Midtown Gas Loop runs under a portion of the Property and other properties at the Midtown Site, and disconnecting or capping certain sections of the Midtown Gas Loop at the Property may have the effect of terminating or adversely affecting the provision of natural gas to other properties and tenants. Accordingly, if the Private Improvements (or any part thereof) will intersect with or be constructed above the Midtown Gas Loop, Developer may be required to relocate sections of the line and/or install temporary connections, in each case in compliance with the Gas Loop Regulations and at Developer's sole cost. In addition, Developer acknowledges that the City intends to prepare and record a declaration of covenants, conditions and restrictions, or similar instrument (as applicable, the "**Gas Loop Declaration**"), for the purpose of establishing an easement and setting forth certain rights and obligations related to the operation, safety conditions, maintenance, repair, replacement and removal of the Midtown Gas Loop and related facilities in compliance with the Gas Loop Regulations, and the coordination with the City to comply with minimum safety requirements for the operation of, and managing emergencies related to the Midtown Gas Loop. The Gas Loop Declaration, which will encumber the Property and all other properties on which the Midtown Gas Loop is located, shall be in the form adopted by the City, provided that no provision thereof shall impose on any property owner at the Midtown Site any material obligations or costs in excess of those set forth in the Gas Loop Regulations.

8.6.2 The City and Developer executed a utility services agreement attached hereto as Exhibit J (the "**Utilities Agreement**"), which Utilities Agreement outlines the provision of natural gas, water, stormwater and sanitary, and electrical service (collectively, the "**Utilities**") to the Buildings and the timeline for disconnection of the Buildings from the existing natural gas service line serving the Midtown Site.

ARTICLE 9
SUBDIVISION

9.1 Subdivision Plat. The City has recorded or will record a new plat map (the "**Plat**") that subdivides the Property into the parcels generally depicted on Exhibit B-1. Upon the recordation of a new plat map, the MRA Director will deliver written notice thereof to Developer, together with a copy of the recorded plat map and the platted legal description of the Property (the "**Legal Description**"), and the Developer shall execute and deliver to the City an acknowledgment including the Legal Description as Exhibit B-2 of this Agreement.

ARTICLE 10
CONVEYANCE OF PROPERTY

10.1 Closing; Closing Costs. Each Closing shall take place through a title company selected by the City (the "**Title Company**") by an escrow closing by mail or electronic delivery as mutually agreed upon by the City and Developer, and otherwise in accordance with the provisions of this Article 10. At each Closing, Developer shall pay any customary statutory transfer, sales, use, gross receipts or similar taxes, the cost of recording the Deed (including, without limitation, any documentary fees), the base premium and all fees for the Title Policy and any endorsements ordered by Developer, and all of the customary closing costs of the Title Company.

10.2 Phase 1 Closing.

10.2.1 *Phase 1 Closing Conditions*. The conveyance of Phase 1 by the City to Developer (the "**Phase 1 Conveyance**") shall be subject to the satisfaction, on or prior to the date that is 90 days after the deadline for substantial completion of the Phase 1 Improvements pursuant to Section 5.2.9 (as may be extended in accordance with this Agreement), of the following conditions (collectively, the "**Phase 1 Closing Conditions**"):

(a) Developer shall have achieved Final Completion of the Phase 1 Improvements;

(b) Developer shall have delivered to the City written notice of election to the City to purchase Phase 1 ("**Phase 1 Purchase Notice**"), which Phase 1 Purchase Notice must be delivered within 30 days after Final Completion of the Phase 1 Improvements, provided that Developer shall be entitled to notice and 10 days' opportunity to cure any failure to deliver such notice;

(c) Developer shall have delivered the Phase 1 Purchase Installment into escrow with the Title Company, along with all recording fees and other amounts required to consummate the Phase 1 Conveyance;

(d) Developer shall have complied in all material respects with (i) the obligations contained in this Agreement, including but not limited to Developer's compliance with the Community Benefit Requirements, and (ii) the obligations contained in the Lease;

(e) All of Developer's representations and warranties contained in this Agreement shall be true and correct in all material respects as of the Phase 1 Closing Date (with appropriate modifications permitted under this Agreement);

(f) Developer shall have paid in full the applicable Annual Assessment (as defined in the Lease) for Phase 1 for the period ending on the day immediately preceding the Closing (based on the number of days in such calendar year in which the City owns Phase 1); and

(g) Developer shall have delivered to the Title Company any and all reasonable and customary documentation, in a form reasonably acceptable to each Party, that may be required by the Title Company to consummate the Phase 1 Conveyance.

10.2.2 *Phase 1 Closing Date*. The consummation of the Phase 1 Conveyance (the "**Phase 1 Closing**") shall occur on the date that is 15 Business Days after all of the Phase 1 Closing Conditions have been satisfied, or on such other date as may be agreed upon by the Parties (as applicable, the "**Phase 1 Closing Date**"). At the Phase 1 Closing, the City will convey Phase 1 to Developer in its as-is condition by delivery of the Deed, without any warranty, express or implied, including but not limited to the presence of Pollutants, and subject to all matters of record. On the Phase 1 Closing Date, the Parties shall, by written instructions from each Party to the Title Company, authorize the Title Company to proceed to release the Phase 1 Purchase Installment to the City, record the quit claim deed to convey Phase 1 to Developer, and carry out such other tasks necessary to complete the Phase 1 Conveyance.

10.3 Phase 2 Closing.

10.3.1 *Phase 2 Closing Conditions*. The conveyance of Phase 2 by the City to Developer (the "**Phase 2 Conveyance**") shall be subject to the satisfaction, on or prior to the date that is 90 days after the deadline for substantial completion of the Phase 2 Improvements pursuant to Section 5.3.9 (as may be extended in accordance with this Agreement), of the following conditions (collectively, the "**Phase 2 Closing Conditions**"):

(a) Developer shall have achieved Final Completion of the Phase 2 Improvements;

(b) Developer shall have delivered to the City written notice of election to the City to purchase Phase 2 ("**Phase 2 Purchase Notice**"), which Phase 2 Purchase Notice must be delivered within 30 days after Final Completion of the Phase 2 Improvements, provided that Developer shall be entitled to notice and 10 days' opportunity to cure any failure to deliver such notice;

(c) Developer shall have delivered the Phase 2 Purchase Installment into escrow with the Title Company, along with all recording fees and other amounts required to consummate the Phase 1 Conveyance;

(d) Developer shall have complied in all material respects with (i) the obligations contained in this Agreement, including but not limited to Developer's compliance with the Community Benefit Requirements, and (ii) the obligations contained in the Lease;

(e) All of Developer's representations and warranties contained in this Agreement shall be true and correct in all material respects as of the Phase 2 Closing Date (with appropriate modifications permitted under this Agreement);

(f) The City shall have recorded, or delivered into escrow with the Title Company for recording at the Phase 2 Closing (prior to the Deed), the land use restriction in accordance with Section 11.8;

(g) Developer shall have paid in full the applicable Annual Assessment (as defined in the Lease) for Phase 2 for the period ending on the day immediately preceding the Closing (based on the number of days in such calendar year in which the City owns Phase 2); and

(h) The Parties shall have delivered to the Title Company any and all reasonable and customary documentation, in a form reasonably acceptable to each Party, that may be required by the Title Company to consummate the Phase 2 Conveyance.

10.3.2 *Phase 2 Closing Date*. The consummation of the Phase 2 Conveyance (the "**Phase 2 Closing**") shall occur on the date that is 15 Business Days after all of the Phase 2 Closing Conditions have been satisfied, or on such other date as may be agreed upon by the Parties (as applicable, the "**Phase 2 Closing Date**"). At the Phase 2 Closing, the City will convey Phase 2 to Developer in its as-is condition by delivery of the Deed, without any warranty, express or implied, including but not limited to the presence of Pollutants, and subject to all matters of record. On the Phase 2 Closing Date, the Parties shall, by written instructions from each Party to the Title Company, authorize the Title Company to proceed to release the Phase 2 Purchase Installment to the City, record the quit claim deed to convey Phase 2 to Developer, and carry out such other tasks necessary to complete the Phase 2 Conveyance.

10.4 Phase 3 Closing.

10.4.1 *Phase 3 Closing Conditions*. The conveyance of Phase 3 by the City to Developer (the "**Phase 3 Conveyance**") shall be subject to the satisfaction, on or prior to the date that is 90 days after the deadline for substantial completion of the Phase 3 Improvements pursuant to Section 5.4.9 (as may be extended in accordance with this Agreement), of the following conditions (collectively, the "**Phase 3 Closing Conditions**"):

(a) Developer shall have achieved Final Completion of the Phase 3 Improvements;

(b) Developer shall have delivered the Phase 3 Purchase Installment into escrow with the Title Company, along with all recording fees and other amounts required to consummate the Phase 3 Conveyance;

(c) Developer shall have delivered to the City written notice of election to the City to purchase Phase 3 ("**Phase 3 Purchase Notice**"), which Phase 3 Purchase Notice must be delivered within 30 days after Final Completion of the Phase 3 Improvements, provided that Developer shall be entitled to notice and 10 days' opportunity to cure any failure to deliver such notice;

(d) Developer shall have complied in all material respects with (i) the obligations contained in this Agreement, including but not limited to Developer's compliance with the Community Benefit Requirements, and (ii) the obligations contained in the Lease;

(e) All of Developer's representations and warranties contained in this Agreement shall be true and correct in all material respects as of the Phase 3 Closing Date (with appropriate modifications permitted under this Agreement);

(f) Developer shall have paid in full the applicable Annual Assessment (as defined in the Lease) for Phase 3 for the period ending on the day immediately preceding the Closing (based on the number of days in such calendar year in which the City owns Phase 3); and

(g) The Parties shall have delivered to the Title Company any and all reasonable and customary documentation, in a form reasonably acceptable to each Party, that may be required by the Title Company to consummate the Phase 3 Conveyance.

10.4.2 *Phase 3 Closing Date*. The consummation of the Phase 3 Conveyance (the "**Phase 3 Closing**") shall occur on the date that is 15 Business Days after all of the Phase 3 Closing Conditions have been satisfied, or on such other date as may be agreed upon by the Parties (as applicable, the "**Phase 3 Closing Date**"). At the Phase 3 Closing, the City will convey Phase 3 to Developer in its as-is condition by delivery of the Deed, without any warranty, express or implied, including but not limited to the presence of Pollutants, and subject to all matters of record. On the Phase 3 Closing Date, the Parties shall, by written instructions from each Party to the Title Company, authorize the Title Company to proceed to release the Phase 3 Purchase Installment to the City, record the quit claim deed to convey Phase 3 to Developer, and carry out such other tasks necessary to complete the Phase 3 Conveyance.

10.5 Title and Permitted Exceptions.

10.5.1 *Conveyance of Title*. At each Closing, subject to the terms and conditions of this Agreement, the City will convey title to the real property underlying the applicable Phase to Developer by New Mexico statutory form quitclaim deed (the "**Deed**"). Title to each applicable Phase will be free of all liens, encumbrances, easements, restrictions, rights and conditions of record, except for the Permitted Exceptions (defined below).

10.5.2 *Title Commitment; Survey*. On or before the date that is 30 days prior to Construction Commencement for each Phase (the "**Title Receipt Deadline**"), Developer shall obtain a commitment for title insurance (a "**Title Commitment**") from the Title Company for the applicable Phase for an ALTA owner's title insurance policy (a "**Title Policy**"), together with legible copies of the documents underlying each exception therein (collectively with the Title Commitment, the "**Title Documents**"). Developer shall cause the Title Company to concurrently distribute copies of the Title Documents to the City. In addition, at any time prior to the applicable Construction Commencement, Developer may order at its sole cost a new survey of the applicable Phase (a "**Survey**").

10.5.3 *Review of Title*. Developer shall have 15 days following the Title Receipt Deadline (with respect to each Phase, the "**Objection Deadline**") to deliver written notice to the City (the "**Objection Notice**") of any matters within the Title Documents to which Developer objects (the "**Title Objections**"), provided that Developer shall not be entitled to object to any matters which are Approved Exceptions (defined below), and no such Approved Exceptions shall constitute a Title Objection. Except as otherwise set forth in Section 10.5.4, if Developer fails to tender an Objection Notice on or before the Objection Deadline, Developer shall be deemed to have approved and irrevocably waived any objections to any matters covered by the Title Documents and the Survey. Within 10 days after the City's receipt of the Objection Notice (the "**Response Deadline**"), the City may, in the City's sole discretion, give Developer notice (the "**Response Notice**") of those Title Objections which the City is willing to cure, if any. If the City fails to deliver a Response Notice by the Response Deadline, the City shall be deemed to have elected not to cure or otherwise resolve any matter set forth in the Objection Notice. If Developer is dissatisfied with the Response Notice, Developer may, as its exclusive remedy, elect by written notice given to the City on or before Construction Commencement for such Phase (the "**Final Response Deadline**"), either to (a) accept the Title Documents and Survey with resolution, if any, of the Title Objections as set forth in the

Response Notice (or if no Response Notice is tendered, without any resolution of the Title Objections) and without any reduction or abatement of the Purchase Price, or (b) terminate this Agreement, in which event neither Party shall have any further rights or obligations hereunder, except for those that expressly survive termination hereof. Except as otherwise set forth in Section 10.5.4, if Developer fails to give notice to terminate this Agreement on or before the Final Response Deadline, Developer shall be deemed to have elected to approve and irrevocably waived any objections to any matters covered by the Title Documents or the Survey, subject only to resolution, if any, of the Title Objections as set forth in the Response Notice from the City (or if no Response Notice is tendered, without any resolution of the Title Objections). Notwithstanding anything to the contrary in this Agreement or in a Response Notice, (a) the City shall be obligated to remove, insure over or bond over any Monetary Encumbrances (as defined below), and (b) Developer shall not be required to tender any Title Objections to any Monetary Encumbrances. "**Monetary Encumbrances**" means any mechanics or materialmen's liens, any monetary lien or claim and the lien of any mortgage, deed of trust or similar security instrument encumbering the Property (or any part thereof) that is created by, under or through the City, except that no Approved Exceptions shall be deemed to constitute Monetary Encumbrances.

10.5.4 *New Title Exceptions*. If at any time after the expiration of the Objection Deadline, any update to the Title Commitment or Survey discloses any additional material item (other than any Approved Exceptions) that materially and adversely affects title to the applicable Phase which was not disclosed on any version of the Title Documents or Survey delivered to Developer prior to the expiration of the Objection Deadline (each, a "**New Exception**"), Developer shall have a period of 5 days from the date of Developer's receipt of such update (the "**New Exception Review Period**") to review and to approve or disapprove of the same. If the New Exception is unacceptable to it, Developer, at its sole option, may elect either (a) to terminate this Agreement, in which event neither Party shall have any further rights or obligations hereunder, except for those that expressly survive termination hereof, or (b) to waive such objections and proceed with the transactions contemplated by this Agreement, in which event Developer shall be deemed to have approved the New Exception. If Developer fails to timely notify the City of its election to terminate this Agreement in accordance with the foregoing clause prior to the expiration of the New Exception Review Period, Developer shall be deemed to have approved and irrevocably waived any objections to the New Exception, and such New Exception will constitute an additional Permitted Exception (as defined below). The provisions in Section 10.5.3 of this Agreement concerning Monetary Encumbrances shall apply to New Exceptions.

10.5.5 The applicable portion of the Property conveyed to Developer at each Closing shall be subject to the following, all of which shall be deemed "**Permitted Exceptions**":

(a) all exceptions appearing in the Title Commitment that were recorded before the date of Developer's execution of this Agreement and each document to be recorded pursuant to and in accordance with the terms of this Agreement, including without limation, the Plat, the Master Plan Amendment, the Gas Loop Declaration, this Agreement and the Lease (the "**Approved Exceptions**");

(b) all matters shown in the Title Documents and the Survey, other than those Title Objections the City has agreed to cure pursuant to the Response Notice under Section 10.5.3;

(c) applicable zoning and governmental regulations and ordinances; and

(d) any defects in or objections to title to the applicable Property, or title exceptions or encumbrances, arising by, through or under Developer (or with Developer's prior written approval).

10.6 No Warranties as to Property; As-Is. Except as otherwise expressly provided in this Agreement, at each Closing, the Property is and shall be delivered by the City to Developer in "as-is" condition, with no warranty expressed or implied by the City, including without limitation, the presence of Pollutants, the existence of refuse, or the condition of the soil, its geology, the presence of known or unknown seismic faults, or the suitability of the Property for the Project.

ARTICLE 11
COMMUNITY BENEFITS

11.1 Economic Impact Requirements. Developer shall commit to the recruitment of film, television and media productions that will generate qualifying direct production expenditures in New Mexico ("**Qualified Expenditures**") in accordance with the Film Production Tax Credit Act (Chapter 7, Article 2F NMSA 1978), as amended (the "**FPTCA**"), of at least $30,000,000.00 ("**Minimum Initial Amount**") during the period commencing on the Effective Date and ending on the fifth anniversary of the Phase 1 Final Completion Date (the "**Initial Spend Period**"). Commencing on the Phase 1 Final Completion Date and continuing for 15 years thereafter (the "**Aggregate Spend Period**"), Developer shall commit to securing productions that will generate Qualified Expenditures of at least $150,000,000.00, inclusive of the Minimum Initial Amount (the "**Minimum Aggregate Amount**").

11.2 Economic Impact Benefit. If Developer fails to secure productions that generate Qualified Expenditures of at least the Minimum Initial Amount by the expiration of the Initial Spend Period, or the Minimum Aggregate Amount by the expiration of the Aggregate Spend Period, Developer shall pay the City an amount equal to the percentage shortfall of the Qualified Expenditures multiplied by the applicable Economic Impact Benefit as the City's sole remedy for Developer's failure. For purposes hereof, "**Economic Impact Benefit**" means the estimated value of the economic impact to the City that will result from the generation of Qualified Expenditures of, (A) with respect to the Minimum Initial Amount, $300,000, and (B) with respect to the Minimum Aggregate Amount, $2,700,000. By way of example, if Developer sources productions that generate Qualified Expenditures of $20,000,000 during the Initial Spend Period and $120,000,000 during the Aggregate Spend Period (i.e., $100,000,000 during the period beginning on the next day following the fifth anniversary of the Phase 1 Final Completion Date and ending on the 15th anniversary of the Phase 1 Final Completion Date), then Developer would be required to pay the City the sum of (i) $100,000 (i.e., $300,000 × (($30,000,000 - $20,000,000) ÷ $30,000,000)) for Developer's failure to generate Qualified Expenditures of at least the Minimum Initial Amount by the expiration of the Initial Spend Period, and (ii) $540,000 (i.e., $2,700,000 × (($150,000,000 - $120,000,000) ÷ $150,000,000)) for Developer's failure to generate Qualified Expenditures of at least the Minimum Aggregate Amount by the expiration of the Aggregate Spend Period. In order to ensure Developer obtains and maintains accurate data related to the total Qualified Expenditures, Developer shall use commercially reasonable efforts to cause each written agreement between Developer and any film production company (as such term is defined in the FPTCA) – or any other Person that may qualify for a film and television tax credit pursuant to the FPTCA – whether such agreement is for the purpose of leasing or licensing all or any portion of the Property or for any other purpose related to the Property, to provide that such Person agrees, as a condition of such agreement, to timely submit to the City Office of Economic

Development all applications and information required to be submitted pursuant to Section 7-2F-6 in order to obtain the film and television tax credit, whether or not such Person qualifies or otherwise desires to obtain such credit. If any Qualified Expenditures arise in connection with a third-party agreement that provides for the use of space and/or equipment at the Property and at the Shellaberger Property, Developer shall be entitled to credit the Qualified Expenditures arising from both the Property and the Shellaberger Property.

11.3 Economic Opportunity Requirements. For a period of 20 years following the Phase 1 Commencement Date, Developer shall use commercially reasonable efforts to coordinate among local community organizations, the Midtown Engagement Partners, the Office of Economic Development and/or other stakeholders from time to time identified by the City and each Project Employer, on the other hand, to cause to be posted or advertised, and to otherwise utilize the available and offered services of such organizations, for the purpose of disseminating information regarding Project Employment Opportunities among residents of the City for prospective employment. For purposes hereof, "**Project Employer**" means any business or other entity that employs at least one employee for at least 20 hours per week at the Project, whether in connection with the design, construction, maintenance or operation of the Project, with the expectation that such employment at the site will continue at the Project for at least eight weeks, which Project Employers may include (but are not limited to) Developer, Developer's Affiliates, tenants, subtenants, contractors and subcontractors (but specifically excluding the City); and "**Project Employment Opportunities**" means all unfilled employment positions at the Project with any Project Employer during the applicable tax year, whether full-time or part-time, for which the Project Employer reasonably anticipates a majority of the responsibilities of the position during the six-month period following the desired hire date will relate to the Project.

11.4 Commercial Use Requirements. On or before the date that is three months after the Final Completion of Phase 1 (the "**Leasing Deadline**"), Developer shall secure tenants for the Driscoll Retail Space and The Screen for the purpose of operating commercial establishments in compliance with Applicable Rules, which are open to the public during normal business hours, consistent with similar establishments to those operated by tenants. Following the Leasing Deadline, Developer shall use its best efforts to ensure the Building currently known as Driscoll Hall and The Screen remain occupied and open to the public. Developer shall not permit either such space to remain vacant or otherwise closed to public use or access for more than nine months during any three-year period, including and shall, if so required, take such actions as are reasonably necessary in order to secure satisfactory tenants, including, without limitation, reducing the offered rent and/or accepting or conceding such other terms as may be reasonably necessary to secure tenants to operate commercial establishments, in compliance with Applicable Rules, in said spaces (the "**Commercial Use Requirement**"). The Commercial Use Requirement shall remain in effect for a period of 20 years following the Leasing Deadline. Notwithstanding the foregoing or any other provision of this Agreement to the contrary, the provisions of this Section 11.4 shall be applicable only to the extent the uses contemplated herein for the Driscoll Retail Space and The Screen constitute permitted uses pursuant to the Master Plan (as amended).

11.5 Film and Multi-Media Internship Requirements. Commencing on the date that is six months after the Phase 1 Final Completion Date and continuing for 20 years thereafter, Developer shall require that production companies operating at the Property offer and fill an aggregate total of up to 20 six-week internships per year (based on the Average Occupancy Rate defined below) in partnership with a Qualified New Mexico Film School or Qualified New Mexico Internship Program, to the extent

that such program exists in New Mexico in connection with such filming (the "**Film Internship Requirements**"). The number of internships required to be offered and filled each year shall equal the product of (i) 20, multiplied by (ii) the Average Occupancy Rate. For purposes hereof, "**Average Occupancy Rate**" means, for each one-year period beginning on the date that is six months after the Phase 1 Final Completion Date, the quotient, expressed as a percentage, of the "average occupied square footage" of the Studio Area divided by the Studio Area, rounded to the nearest multiple of 5%; and the term "average occupied square footage" means, with respect to each one-year period measured, the net rentable square footage of the Studio Area for which Developer is collecting rent or other revenue as of each day of the one-year period measured divided by the total number of days in such one-year period; and "**Studio Area**" means the net rentable square footage of the Property designated for film or multi-media production, including any industrial or light manufacturing area but excluding, without limitation, all areas for which office, commercial or retail are the sole permitted uses; and "**Base Rentable Studio Area**" means the total Studio Area at the Property determined pursuant to a measurement of the Buildings to be obtained by Developer and approved by the MRA Director prior to the operation of Developer's business at the Property. By way of example, if the Base Rentable Studio Area is 350,000 square feet, and during the course of an applicable one-year period consisting of 365 days, Developer licenses (a) 308,000 square feet of Studio Area (i.e., 88%) for 180 days, (b) 262,500 square feet of Studio Area (i.e., 75%) for 90 days, and (c) 227,500 square feet of Studio Area (i.e., 65%) for 95 days, the Average Occupancy Rate would be equal to 78.81% (i.e., **43.40%** *(88% × (180/365))* + **18.49%** *(75% × (90/365))* + **16.92%** *(90% × (95/365))*), which would round to 80% and result in a requirement of 16 internships (i.e., 20 × 80%) during said period.

11.6 Cultural Elements. Commencing no later than six months after the Phase 1 Final Completion Date and continuing for a minimum of 20 years thereafter, Developer shall (collectively, the "**Cultural Elements Requirements**"):

11.6.1 Provide local community organizations, the Midtown Engagement Partners, or other stakeholders identified from time to time by the City, access to The Screen at least eight days per year at no additional fees beyond reasonable operating costs, including security, staff, and maintenance. Such access shall be at times not normally reserved for normal public theater programming.

11.6.2 Include in the programing of the screening theater at least four events including but not limited to movie showings, guest speakers, and other related programs that are coordinated and/or co-created with local community organizations, the Midtown Engagement Partners, or other stakeholders identified from time to time by the City. Programs shall be inclusive and shall represent the interests of one or more groups historically subject to discrimination or underrepresented, such as the LGBTQ+ community, communities of color, low-income households, Spanish-speaking people, and Indigenous people, and/or causes supportive of any such group's interests, including but not limited to racial equity, social equity or gender equity.

11.6.3 From time-to-time following notice from the City, coordinate with the City to (a) select a mutually acceptable location at the Project for placement of up to three outdoor sculptures selected by the City which are currently located at the Property, and (b) relocate such sculptures onto the Project (at the City's expense). For the avoidance of doubt, the City shall retain the ownership and control of any such sculpture from and following relocation onto the Project, and may remove the same at any time and from time to time upon notice to Developer.

11.7 Dedication of Educational Space. Prior to the date that the City conveys Phase 1 to Developer, the City will record against the Property (or a portion thereof) the educational use covenant attached hereto as Exhibit K.

11.8 Housing Elements. If the Phase 2 Improvements consist of one or more residential units, then prior to the date that the City conveys Phase 2 to Developer, the City's Office of Affordable Housing will record against the real property comprising Phase 2 (or a portion thereof) the City's standard form of land use restriction that will include, among other things, the following obligations that will bind Developer and its successor and assigns:

11.8.1 15% of the total number of residential units developed on-site shall be affordable in compliance with the Santa Fe Homes Program, SFCC 1987, Section 26-1.

11.8.2 Developer shall prohibit property owners and property management entities of residential units from discriminating regarding the use of housing vouchers or source of income; as well as based on race; color, nation origin, religion, sex (including gender identity and sexual orientation), familial status, disability and other protected groups identified in the City's code or charter, in addition to the State of New Mexico's Human Rights Act, NMSA 1978, Section 28-1-7, or federal fair housing law.

11.9 Midtown District Assessments. In the event that the Property is included in a Tax Increment Finance district ("**TIF District**"), Developer shall properly indicate inclusion in the TIF District on all relevant documents submitted to the New Mexico State Department of Tax and Revenue. Developer shall contractually require all tenants occupying the Property to properly indicate inclusion in the TIF District on all relevant documents submitted to the New Mexico State Department of Taxation and Revenue. The City may require Developer to provide proof of compliance with the foregoing obligation.

11.10 Building Names. Commencing on the Effective Date and for a period of 20 years thereafter, Developer, for itself and its successors and assigns, hereby agrees that Developer shall not be entitled to change the names of the Buildings currently known as 'Benildus Hall' (the "**Benildus Name**") and 'Garson Studios' (the "**Garson Name**" and, together with the Benildus Name, the "**Historical Names**") without the prior written approval of the MRA Director, which approval shall not be unreasonably withheld, conditioned or delayed. Notwithstanding the foregoing, Developer, or the then current owner of either such Building, may, at no cost or expense to the City, may from time to time upon at least 30 days prior written notice to the MRA Director, effect a change of (a) the Benildus Name to a different name that includes the words "Benildus" or "Benildus Hall" or (b) the Garson Name to a different name that includes the words "Garson" or "Garson Studios."

11.11 Environmental Elements.

11.11.1 *Stormwater Management*. Developer shall follow the guidelines established in the Master Plan and Community Development Plan and implement best practices for site construction to ensure that completed stormwater features perform as designed, including implementing procedures to ensure that Developer's contractors avoid pre-compaction of infiltration areas with heavy equipment traffic. Developer shall incorporate water quality treatments for the 90th percentile storm event at the Midtown Site, provided that Developer may incorporate water quality treatments for the 80th percentile storm event following the City's written approval (which shall not be unreasonably withheld) if Developer submits a Technical Memorandum (defined below) to the City that incorporating the 90th

percentile treatments would (a) result in additional costs that exceed 115% of the cost of the 80th percentile treatments, or (b) be infeasible or otherwise result in site constraints that adversely affect the proposed development. For an estimation of the 90th percentile storm event discharge volume, Developer shall refer to U.S. Environmental Protection Agency's (EPA) Technical Report entitled "Estimating Pre-development Hydrology in the Urbanized Areas in New Mexico," and shall elect either the (i) site-specific 90th percentile storm event discharge volume using methodology specified in the referenced EPA Technical Report, or (ii) site-specific pre-development hydrology and associated storm event discharge volume using methodology specified in the referenced EPA Technical Report. If the obligations set forth in this Section are inconsistent with those contained in the Applicable Rules, the more stringent standard or obligation shall control unless a more stringent standard or obligation is expressly precluded by the Applicable Rules. Notwithstanding any provision of this Agreement to the contrary, the Applicable Rules regarding the design of the Project, if any, shall be those that are in effect at the time the Project plans are being processed for approval. "**Technical Memorandum**" means a memorandum, signed by a registered engineer in the state of New Mexico, substantiating the infeasibility of the site meeting the discharge requirements for the 90th percentile storm event, which includes a comprehensive demonstration of why compliance is not possible. Additionally, Developer shall be required to provide such supporting documentation, modeling, and drainage calculations related to the feasibility assessment as the City may reasonably request.

11.12 Environmental and Energy Design Requirements. Developer shall construct all new buildings and renovate all existing Buildings to earn the maximum eligible points for the subcategories designated as 'Required in RFP' on the Project Checklist attached as Appendix A to the Community Development Plan, as further described in the United States Green Building Council (USGBC) Leadership in Environmental and Energy Design: Neighborhood Development (LEED-ND) attached hereto as Exhibit F.

ARTICLE 12
MAINTENANCE AND REPAIR

12.1 Maintenance and Repair. Developer shall keep the Property, including sidewalks and driveways, in safe, good and clean condition, free and clear of equipment, building materials, trash, and debris, other than building materials needed immediately for the construction of the Private Improvements. All building materials stored by Developer Parties (defined below) on the Property in shall be kept in a safe and secure manner. At all times during which Developer, its officers, directors, managers, members, affiliates, agents, employees, representatives, contractors or subcontractors or any other person or entity acting at the direction or with the consent of Developer (each, including Developer, a "**Developer Party**" and, collectively, the "**Developer Parties**") are engaged in the performance of construction activities ("**Construction Activities**"), Developer shall: (a) bear the exclusive responsibility and expense of keeping roads and access ways within and in the vicinity of the Property in safe and clean condition, reasonably free of dirt, mud, and debris which result from Developer's Construction Activities, (b) maintain dumpsters or other trash receptacles at all times and shall empty such dumpsters and trash receptacle before they overflow, but not less frequently than once per week to prevent blowing trash, and (c) install a temporary chain link fence or other protective barriers and caution signage around applicable construction areas.

12.2 Damage. At all times during which the Developer Parties are engaged in Construction Activities, Developer shall take reasonable measures to prevent any damage to adjacent or nearby land, including land owned or maintained by the third parties, governmental entities, utility companies or

the City (the "**Adjacent Land**"), and any Adjacent Improvements located on the Adjacent Land from damage caused by the Construction Activities. "**Adjacent Improvements**" shall include, but shall not be limited to, the Midtown ROW Improvements and all other streets, curbs, gutters, sidewalks, streetlights, underground utilities, walls, landscaping and irrigation improvements, irrigation ditches, and all entry, parking and paving facilities, as well as any other improvements not owned by Developer. Developer shall notify the MRA Director within 10 days following the occurrence of damage to any portion of the Adjacent Land or Adjacent Improvements caused by a Developer Party. Developer shall, at its sole cost and expense, repair such damage and restore the Adjacent Land and/or Adjacent Improvements so damaged to the condition existing immediately prior to the date of such damage. Developer shall indemnify and hold harmless the City Parties from any loss, cost, claim, or damage, including reasonable attorneys' fees, arising from such damage, and shall pay the costs of repairing any damage to the Adjacent Land and/or Adjacent Improvements to the extent such damage results from Construction Activities of Developer or Developer Parties. If Developer fails to properly repair such damage within 30 days follow the occurrence of such damage, the City may elect, pursuant to the City Code, to repair such damage and restore the Adjacent Land and/or Adjacent Improvements so damaged to the condition existing immediately prior to the date of such damage, in which event Developer shall pay the City for the cost of such repair within 10 days following written notice thereof. Notwithstanding any provision of this Article 12 to the contrary, if any damage caused by a Developer Party to any portion of the Adjacent Land or Adjacent Improvements poses imminent danger to the health, safety or welfare of persons located thereon or persons or property in the vicinity thereof, the City may, without providing written notice to Developer or opportunity to cure, repair such damage and property so affected, in which event Developer shall reimburse the City for the cost of such repair within 10 days following written notice thereof.

ARTICLE 13
RESERVED

ARTICLE 14
RELEASE & INDEMNIFICATION

14.1 Release. Developer releases the City Parties from, and covenants and agrees that the City Parties shall not be liable to Developer for, any loss or damage to property or any injury to or death of any Person or Persons occasioned by any cause whatsoever pertaining to the Project, the Property, the use thereof, or any other transaction contemplated by this Agreement; provided that such release shall not apply to any loss or damage to the extent caused by the negligence, acts or omissions of the City Parties.

14.2 General Indemnity. Developer shall indemnify, defend (with counsel reasonably approved by the City, as applicable) and hold harmless the City Parties from all Liabilities, arising from any all claims ("**Claims**") brought against one or more City Parties by any third-party which arise out of or in connection with the Property or any activities, acts or omissions of any of the Developer Parties; provided, however, such indemnity shall not apply to any Liabilities caused by the negligence, acts or omissions of any City Parties and shall be subject to the limitations of NMSA 1978, Section 56-7-1. Developer's indemnity obligations owing to the City Parties under this Section are not limited by applicable insurance coverage required under the Lease. The City shall, after receipt of notice of the existence of a Claim for which it is entitled to indemnity hereunder, notify Developer in writing of the existence of such Claim or commencement of such action.

14.3 Environmental Indemnity. Developer hereby agrees to indemnify, defend (with counsel reasonably approved by the City, as applicable) and hold harmless the City Parties, from all Liabilities (including, but not limited to expenses, penalties and clean-up costs) arising from and against any and all Claims brought against one or more City Parties related to this Project, arising out of or in any way relating to (a) the presence, release, use, generation, transportation, discharge, storage or as a consequence of disposal by Developer Parties, or the presence of any Pollutants in, on or about the Property occurring as a result of or in connection with Developer Parties' use or occupancy of the Property, and in the removal, remediation and disposal of any Pollutants, and (b) the violation, or alleged violation, of any Environmental Laws relating to the use, generation, release, discharge, storage, disposal or transportation of Pollutants on, under, in or about, to or from the Property or migrating onto or under the Property from neighboring properties or otherwise affecting the Property, to the extent caused or permitted by any Developer Parties.

14.4 Survival. The provisions of this Article 14 shall survive any expiration or earlier termination of this Agreement.

ARTICLE 15
ASSIGNMENT; TRANSFER

15.1 Assignment; Transfer. The qualifications and identity of Developer are of particular concern to the City. It is because of those unique qualifications and identity that the City has entered into this Agreement with Developer. Accordingly, Developer shall not directly or indirectly (including by a direct or indirect transfer of the equity in Developer), sell, assign, transfer, convey, or otherwise dispose of, its right, title or interest in this Agreement or a Controlling interest in Developer, whether voluntarily or involuntary by foreclosure, trustee's sale, assignment in lieu thereof or other enforcement of a pledge, hypothecation or collateral assignment of this Agreement (in each case, a "**Transfer**"), without the prior written consent of the City, which consent may be withheld in the City's sole and absolute discretion. Any such attempted Transfer, other than as permitted in this Article 15, without such consent shall be null and void. No Transfer, whether with or without consent, shall operate to release Developer or alter Developer's primary liability to perform its obligations under this Agreement.

15.2 Permitted Transfer. Notwithstanding anything in this Article 15 to the contrary, and provided there is no uncured Event of Default by Developer under this Agreement or the Lease, Developer shall have the right, without the prior written consent of the Governing Body, to Transfer this Agreement or a direct or indirect ownership interest in Developer to (a) a third party, provided that Developer's Principal or an entity Controlled by Developer's Principal, remains the Controlling member of Developer, (b) a Leasehold Mortgagee (as such term is defined in the Lease), or (c) a purchaser of all or substantially all of Developer's assets from the Leasehold Mortgagee or its designee or nominee approved by the City following a Mortgagee Transfer Event (as defined in the Lease) (each, a "**Permitted Transfer**"); provided, however, that, except as otherwise set forth in Section 15.4, (i) such Permitted Transfer is for a valid business purpose and not to avoid any obligations under this Agreement, (ii) no later than 15 days prior to the effective date of the Permitted Transfer, Developer shall give notice to the City, which notice shall include the full name and address of the assignee, and a copy of all agreements executed between Developer and the assignee with respect to the Project or part thereof, as may be the case, (iii) no later than five days after the effective date of the Permitted Transfer, the assignee shall provide a written instrument satisfactory to the City evidencing assignee's assumption of all of the obligations of Developer hereunder, and (iv) within 10 days after the City's

written request, provide such reasonable documents or information which the City reasonably requests for the purpose of substantiating whether or not the Permitted Transfer is to an Affiliate or is otherwise in accordance with the terms and conditions of this Section 15.2. Developer shall not have the right to perform a Permitted Transfer, if, as of the date of the effective date of the Permitted Transfer, an Event of Default is then continuing.

15.3 Collateral Assignment. Notwithstanding the foregoing, Developer may collaterally assign this Agreement to a Leasehold Mortgagee (as defined in the Lease), provided that (i) Developer provides written notice to the MRA Director along with a copy of the collateral assignment at least 10 days prior to the closing of such Leasehold Mortgage, and (ii) the Leasehold Mortgagee complies with the terms and conditions of Section 15.4.

15.4 Financing.

15.4.1 If any interest of Developer in any Phase is Transferred by reason of any foreclosure, deed in lieu of foreclosure, trustee's deed or any other proceeding for enforcement of a Leasehold Mortgage, then the Leasehold Mortgagee thereunder (or any Approved Designee (as defined in the Lease) of the Leasehold Mortgagee) shall agree to assume the obligations of Developer hereunder without the necessity of entering into a an assignment and assumption agreement, except as otherwise provided in this Section 15.4. Notwithstanding the foregoing, the City shall not have the right to terminate this Agreement as a result of any Leasehold Mortgagee failing to assume the obligations of Developer hereunder unless such Leasehold Mortgagee or its Approved Designee fails to do so within 90 days after such Leasehold Mortgagee's acquisition of Developer's leasehold interest in the applicable Phase; it being acknowledged that such Leasehold Mortgagee may intend to Transfer its interest in the such Phase to an Approved Designee and such Approved Designee shall assume the obligations of Developer hereunder.

15.4.2 In no event may Developer represent that the City is or in any way may be liable for the obligations of Developer in connection with (i) any financing agreement or (ii) any public or private offering of securities. Developer agrees to indemnify, defend or hold the City and its respective officers, directors, agents and employees free and harmless from, any and all liabilities, costs, damages, claims or expenses arising out of or related to the breach of its obligations under this Section 15.4.

15.4.3 Developer's breach of this Agreement shall not defeat, render invalid, diminish or impair the lien of any Leasehold Mortgage on the applicable Phase made in good faith and for value.

15.4.4 Prior to terminating this Agreement or exercising any other right or remedy due to an Event of Default, the City will give written notice of any the Event of Default to each Leasehold Mortgagee that previously notified the City of its name, notice address, and of the Leasehold Mortgage's existence (together with a copy thereof), and shall afford the Leasehold Mortgagee a period of 30 days after delivery of such notice in which to cure the Event of Default; provided, however, if any such Event of Default arises from a non-monetary breach or violation that is susceptible to cure by the Leasehold Mortgagee but cannot reasonably be cured within such 30-day period, then so long as the Leasehold Mortgagee commences to cure the Event of Default within the 30-day period and diligently pursues such cure to completion, the Leasehold Mortgagee shall have up to 90 days after notice from the City in which to complete such cure.

15.4.5 Notwithstanding Section 15.4.4 to the contrary, in the event of a non-monetary default which cannot be cured without obtaining possession of the applicable Phase or that is otherwise personal to Developer (i.e., 18.1.1(d) (*General Assignment*), 18.1.1(e) (*Voluntary Petition*), 18.1.1(f) (*Involuntary Petition*) and 18.1.1(g) (*Appointment of Receiver*)) and not susceptible of being cured, the City will not seek any legal remedies under this Agreement without first giving each Leasehold Mortgagee (or its Approved Designee) reasonable time within which exercise its rights and remedies under the Leasehold Mortgage to obtain possession of the applicable Phase, including possession by a receiver, or to institute and complete foreclosure proceedings, and to the extent the Leasehold Mortgagee exercises such rights and remedies (and notifies the City of the same), no cure period set forth in Section 15.4.4 shall commence to run until the Leasehold Mortgagee obtains possession or control of Developer's interest in the applicable Phase. Upon acquisition of Developer's interest in the applicable Phase and performance by the Leasehold Mortgagee of all covenants and agreements of Developer, except those which by their nature cannot be performed or cured by any Person other than Developer (i.e., Sections 18.1.1(d) through 18.1.1(g)), the City's right to seek legal remedies for such non-monetary default shall be waived with respect to the matters which cannot be cured by the Leasehold Mortgagee; provided, however, the City shall not be deemed to have waived any remedies it may have against Developer or Developer's Principal, including without limitation, pursuant to Section 18.2.1(e).

ARTICLE 16
LIENS

Except with respect to leasehold financing permitted under the Lease, (a) Developer shall not place or allow to be placed on the Property (excluding any portion of the Property conveyed pursuant to Section 10.1). any mortgage, deed of trust, security interest, monetary encumbrance or lien (statutory or otherwise), or any agreement to enter into or create any of the foregoing (collectively, a "**Lien**"), on or affecting all or any portion of the Property. Notwithstanding the foregoing, no such Lien shall constitute an Event of Default if, within 30 days after Developer becomes aware of a Lien on or affecting the Property or the Private Improvements, Developer causes the debt secured by such Lien to be satisfied or other security (including a bond) to be deposited with the court in the amount determined by the court to be sufficient to cancel such Lien.

ARTICLE 17
REPORTING REQUIREMENTS

17.1 Reporting Requirements.

17.1.1 *Construction Related Reports*. Developer shall provide written reports substantially in the form attached hereto as Exhibit M (each, a "**Report**") to the MRA Director detailing: (a) the progress of all entitlements, permits, approvals and construction financing required for the commencement of construction of each Phase, (b) during construction, the progress of construction (expressed as a percentage of the completion of each Phase) and any concerns or perceived delays to complete the applicable Phase, and (c) any other information relating to the construction of the Project that the MRA Director may request in its sole discretion. The form of Report may be amended from time to time by the MRA Director. No later than January 31, April 30, July 31, and October 31 of each year, Developer shall deliver to the MRA Director a Report containing the applicable information described above for the prior three-month period (each, a "**Quarterly Construction Report**"). In addition to each Quarterly Construction Report, within 15 days following

the MRA Director's written request, Developer shall deliver to the MRA Director a Report containing the information specified in the MRA Director request.

17.1.2 *Program Related Reports*. On or before January 31st of each year following the Effective Date, Developer shall provide a report to the MRA Director summarizing the extent of Developer's material compliance with the terms of Developer's obligations contained in Sections 11.1 through 11.8 during the preceding calendar year or, with respect to the year in which this Agreement becomes effective, the preceding partial calendar year, provided that no report shall be required for calendar year 2024. This Section 17.1.2 shall survive the expiration or termination of this Agreement for the duration of Developer's obligations under Sections 11.1 through 11.8.

17.1.3 *Developer's Financial Statements*. During the Term of this Agreement, Developer agrees to furnish the MRA Director a copy of Developer's annual Financial Statements within 90 days after the end of Developer's fiscal year. All Financial Statements shall be certified as true and correct by Developer's Principal and reviewed by a certified public accountant who is not an employee or principal of Developer or its Affiliates.

17.2 Audits and Inspections. Not more than twice per calendar year, and at any time after the City has provided written notice to Developer of its reasonable, good faith belief that Developer has materially breached this Agreement (together with documentation or other evidence of such breach), Developer shall make available to the MRA Director for examination all of Developer's records with respect to all matters for which reports or statements are provided pursuant to Section 17.1 of this Agreement. The MRA Director shall give reasonable notice to Developer of such examination, and in any event, a minimum of 14-days' prior notice. Developer shall permit the MRA Director to audit, examine, and make excerpts or transcripts from such records, and to make audits of all contracts, invoices, materials, payrolls, records of personnel, conditions of employment and other data relating to all matters covered by this Agreement. This Section 17.2 shall survive the expiration or termination of this Agreement for the duration of Developer's obligations under Sections 11.1 through 11.8.

17.3 IPRA Compliance. Developer understands that records in the possession of the City are subject to IPRA, and to the extent required, Developer will comply with IPRA.

ARTICLE 18
DEFAULT AND REMEDIES

18.1 Default by Developer.

18.1.1 *Events of Default*. The following constitute an "**Event of Default**" under this Agreement:

(a) *General Breach*. Developer's breach, or failure to perform in any material respect, any Applicable Rule or any commitment, agreement, covenant, term or condition of this Agreement (other than those specifically described in any other subparagraph of this Section 18.1.1), and failure to remedy any such breach or failure within 30 days after receipt of written notice from the City with respect thereto; provided, however, that such breach or failure will not constitute an Event of Default if such breach or failure cannot reasonably be cured within said 30-day period so long as (i) Developer, within said 30-day period, initiates and diligently and continuously pursues

appropriate measures to remedy the breach or failure, and (ii) such default is cured within 90 days after Developer's receipt of the notice from the City with respect thereto.

(b) *Abandonment*. Developer Abandons the construction of the Project. For purposes hereof, "**Abandon**" and "**Abandonment**" means the stoppage of construction of a Phase of the Project for more than 120 consecutive calendar days after Commencement of Construction of the Phase and prior to Final Completion of the Phase for any reason other than a Force Majeure Event or the City's failure to perform its obligations under Section 8.2 through no fault of Developer.

(c) *Failure to Complete*. Subject to a Force Majeure Event, (i) Developer's failure to cause the Final Completion of Phase 1 by the Phase 1 Final Completion Date, (ii) following Construction Commencement for the Phase 2 Improvements, Developer's failure to cause the Final Completion of the Phase 2 Improvements by the Phase 2 Final Completion Date, or (iii) following Construction Commencement for the Phase 3 Improvements, Developer's failure to cause the Final Completion of the Phase 3 Improvements by the Phase 3 Final Completion Date.

(d) *General Assignment*. Developer makes a general assignment for the benefit of creditors or admits in writing its inability to pay its debts as they become due.

(e) *Voluntary Petition*. Developer files a voluntary petition under any title of the United States Bankruptcy Code, as amended from time to time, or such petition is filed against Developer and an order for relief is entered, or Developer files any petition or answer seeking, consenting to or acquiescing in any reorganization, arrangement, composition, readjustment, liquidation, dissolution or similar relief under any present or any future federal bankruptcy code or any other present or future applicable federal, state or similar statute or law, or seeks or consents to or acquiesces to or suffers the appointment of any trustee, receiver, custodian, assignee, liquidator or similar official of Developer, or of all or any substantial part of its properties or of the Project or any interest therein of Developer; provided, however, that Developer shall have the right, within 180 days after filing or receiving notice of any such petition or similar action or proceeding described in this subparagraph, to cause such petition or similar action or proceeding to be dismissed, in which case such petition or similar action or proceeding shall not be an Event of Default.

(f) *Involuntary Petition*. Any proceeding against Developer seeking any reorganization, arrangement, composition, readjustment, liquidation, dissolution or similar relief under the present or any future federal bankruptcy code or any other present or future applicable federal, state or similar statute or law, has not been dismissed within 180 days after the commencement thereof.

(g) *Appointment of Receiver*. The appointment of any trustee, receiver, custodian, assignee, liquidator or other similar official of Developer or of all or any substantial part of its properties or of the Project or any interest therein of Developer, which appointment has not been vacated or stayed on appeal or otherwise within 180 days after the appointment, or such appointment has not been vacated within 180 days after the expiration of any such stay.

(h) *Breach of Representations*. Any material representation or warranty made by Developer in this Agreement, or in any certificate, notice, demand or request made by Developer in writing and delivered to the City pursuant to or in connection with this Agreement or the Lease, is untrue, false or misleading in any material respect as of the date made or furnished; provided, however, to the extent a representation or warranty is untrue, false or misleading for reasons other than an intentional, material misrepresentation by Developer, such untrue, false or misleading

representation or warranty shall not cause an Event of Default if (i) it is susceptible to cure (i.e., Developer's actions can cause the facts or circumstances relative to the applicable circumstance to change such that the representation or warranty as originally made will become correct), and (ii) such cure is made by Developer within 30 days after receipt by Developer of written notice from the City of the same, provided that if such cure cannot reasonably be completed within said 30-day period, then such longer period of time not to exceed 90 days after Developer's receipt of the notice from the City with respect thereto, so long as Developer, within said 30-day period, initiates and diligently and continuously pursues appropriate measures to cure such breach.

(i) *Failure to Maintain Insurance*. Developer fails to replace or otherwise maintain in full force and effect, without any gap in coverage, any insurance required to be maintained by Developer pursuant to Section 11 of the Lease.

(j) *Monetary Default*. Developer fails to make any payments required to be made by Developer hereunder as and when due, and fails to make any such payment within 30 days after receiving written notice of such failure from the City.

18.2 Remedies.

18.2.1 Upon the occurrence and during the continuance of an Event of Default, the City may, at the City's election:

(a) enter into a workout agreement with Developer to modify this Agreement in the City's sole discretion;

(b) terminate this Agreement and, if the City so elects, in its sole discretion, require the demolition and removal of any partially constructed or partially completed Private Improvements associated with the applicable Phase and the performance of Site Restoration pursuant to and in accordance with Section 7.5, but only if such Event of Default arises in connection with any of the following events (each, a "**Termination Event**"):

(i) any Event of Default arising in connection with any acts or omissions of Developer constituting gross negligence, willful or wanton misconduct, fraud or a knowing violation of any Applicable Rules;

(ii) any Event of Default under 18.1.1(d) (*General Assignment*), 18.1.1(e) (*Voluntary Petition*), 18.1.1(f) (*Involuntary Petition*) or 18.1.1(g) (*Appointment of Receiver*);

(iii) any Event of Default under Sections 18.1.1(b) (*Abandonment*);

(iv) any Event of Default under Section 18.1.1(c) (*Final Completion*) that continues for more than 12 months following the required date for Final Completion for any Phase thereunder;

(v) any Event of Default under Section 18.1.1(i) (*Failure to Maintain Insurance*), or, if the City obtains insurance on Developer's behalf pursuant to Section 18.2.1(d), Developer's failure to reimburse the City within 90 days after the City's written demand therefor; and

(vi) the occurrence of more than two Events of Default under any subsection of Section 18.1.1, exclusive of any other Terminating Event, in any 12-month period; and

(c) if the Developer Abandons the construction of the Project or fails to cause Final Completion of any applicable Phase, (i) do such acts and expend such reasonable funds at the expense of Developer as are reasonably necessary to construct and complete the applicable Private Improvements, in which event all funds expended by the City for such work shall be due and payable by Developer within 30 days after demand by the City, together with accrued interest thereon at 12% per annum from the date incurred until paid, *or* (ii) receive liquidated damages under the circumstances set forth in Section 18.3;

(d) if Developer fails to replace or otherwise maintain in full force and effect, without any gap in coverage, any insurance required to be maintained by Developer pursuant to Section 11 of the Lease, obtain such insurance on Developer's behalf, in which event Developer shall reimburse the City for the cost of such insurance premium within 30 days after written demand by the City, together with accrued interest thereon at 12% per annum from the date incurred until paid;

(e) exercise its rights and remedies under the Guaranty or Bond, as applicable;

(f) seek to enjoin or restrain Developer from commencing or continuing said Event of Default;

(g) seek to cause by injunction Developer to correct and cure said Event of Default; and/or

(h) exercise any and all remedies at law, in equity or otherwise available under this Agreement.

18.2.2 Upon the City's election to exercise its remedy to terminate this Agreement under Section 18.2.1(b) or construct the Private Improvements under Section 18.2.1(c)(i), Developer shall deliver to the City an Assignment of Plans in the form attached hereto as Exhibit L, pursuant to which Developer shall assign to the City all of Developer's right, title and interest in and to all Plans and Specifications and Approvals. Developer acknowledges and agrees that, as a condition of the City's consummation of the transactions herein, each written agreement between Developer and any Person performing work at or for the Project, including work relating to the preparation or modification of the Plans and Specifications, shall include such Person's consent to the assignment by Developer to the City of all right, title and interest of Developer in and to Plans and Specifications.

18.2.3 Upon the occurrence and during the continuance of any material breach, failure or other condition that, but for the City's delivery of notice or the lapse of time thereafter, would constitute an Event of Default, the City may withhold the release of any final maps and/or building permits or other City approvals until the breach or failure is resolved to the reasonable satisfaction of the City; provided, however, the City will not withhold the release of any of the foregoing maps, permits or approvals if Developer delivers written notice to the City of its commencement of actions to cure such breach, failure or other condition within the applicable cure period.

18.3 Liquidated Damages. The City and Developer covenant and agree that because of the difficulty and/or impossibility of determining the City's damages upon the occurrence of an Event of

Default pursuant to Section 18.1.1(c) (*Failure to Complete*), by way of detriment to the public benefit and welfare of the City through lost employment opportunities, degradation of the economic health of the City and loss of revenue, both directly and indirectly, if the City elects its remedy to receive liquidated damages under Section 18.2.1(c)(ii), Developer shall pay to the City, and the City shall accept as an exclusive remedy, as liquidated damages and as a reasonable forecast of such potential damages and not as penalties, $500 per calendar day commencing on the date that the City delivers written notice to Developer of its election to receive liquidated damages pursuant to this Section 18.3 and continuing until earlier of (a) the date that such Event of Default is cured, or (b) the termination of this Agreement pursuant to a Termination Event. Developer agrees to waive any and all affirmative defenses that the amount of liquidated damages provided herein constitutes a penalty.

18.4 Community Benefit and Commercial Use Requirements. Notwithstanding any provision of this Article 18 to the contrary, if Developer fails to satisfy or comply with any of the Community Benefit Requirements, and such failure or non-compliance continues for 30 days after the City provides written notice thereof (a "**Non-Compliance Event**"), Developer shall be obligated to pay to the City a fee (each, a "**Non-Compliance Fee**") for each such Non-Compliance Event, the amount of which shall be $25,000 as of the Effective Date and shall increase annually by the percentage increase in the Consumer Price Index from the Effective Date to the most recent anniversary of the Effective Date prior to the date such Non-Compliance Fee becomes due; provided, however, Developer shall not (i) be required to pay a Non-Compliance Fee more than one time in a calendar year for the same Non-Compliance Event, or (ii) be liable for payment of a Non-Compliance Fee for any Non-Compliance Events in excess of four such events (i.e., $100,000, subject to adjustment based on the Consumer Price Index). For purposes hereof, "**Community Benefit Requirements**" means each of the following independent requirements: (a) the economic opportunity requirements in Section 11.3, (b) the Commercial Use Requirements in Section 11.4, (c) the Film Internship Requirements in Section 11.5, and (d) the Cultural Element Requirements in Section 11.6. The Non-Compliance Fee shall constitute the City's sole and exclusive remedy with respect to Developer's failure to satisfy any such Community Benefit Requirements in any calendar year, except that Developer's failure to pay the City any Non-Compliance Fee within five days after the date such Non-Compliance Fee becomes due shall constitute an Event of Default upon which the City shall be entitled to exercise its remedies under this Article 18.

18.5 Rights and Remedies Cumulative. Except as otherwise expressly stated in Sections 18.3 (Liquidated Damages) and 18.4 (Community Benefit and Commercial Use Requirements), the rights and remedies of the City are cumulative and in addition to any other right or remedy given hereunder or now or hereafter existing by agreement, Applicable Rules, or in equity, and the exercise by the City of one or more of such rights or remedies shall not preclude the exercise by it, at the same or different times, of any other rights or remedies for the same Event of Default or any other Event of Default, to the extent permitted by law. The provisions of this Article 18 shall survive the expiration or termination of this Agreement. No waiver made by the City or Developer shall apply to obligations beyond those expressly waived in writing.

18.6 Event of Default by City. If the City defaults in its obligation to convey title to any Phase to Developer at the applicable Closing for such Phase pursuant to and in accordance with this Agreement, Developer shall deliver to the City a written notice of default and, upon the City's receipt of the notice of default, the City shall commence and complete the cure of such default. If the City has not completed the cure of the default within 60 days after receipt of the written notice of default, or such longer period as may be reasonably required by the City, provided that the City continuously and

diligently pursues the cure of the default at all times during such period until such cure is completed, then the City's failure to convey title shall constitute a "**City Default**" hereunder. Upon any City Default, Developer may elect, by written notice to the City, as Developer's sole remedy, either to (i) terminate this Agreement, in which case the Initial Deposit will be returned to Developer and, the parties will be relieved of all further obligations under this Agreement except for those obligations that survive termination of this Agreement, or (ii) treat this Agreement as being in full force and effect and, within 30 days following written notice to the City of its election, file a suit for specific performance to compel the City to convey title to the applicable Phase to Developer in accordance with this Agreement. Developer irrevocably waives any right to bring an action for damages of any nature or type, including, without limitation, actual, consequential, incidental or punitive damages. As material consideration for the City entering into this Agreement with Developer, Developer expressly waives any right to record or file a lis pendens or a notice of pendency of action or similar notice against all of any portion of the Project. No part of this Agreement shall be deemed to abrogate or limit any immunities or defenses the City may otherwise have with respect to claims for monetary damages.

18.7 Waiver. Any failures or delays by either Party in asserting any of such Party's rights and remedies as to any Event of Default or City Default, as applicable, shall not operate as a waiver of such Event of Default or City Default, or of any of such Party's rights or remedies hereunder. The provisions of this Article 18 shall survive the expiration or termination of this Agreement.

18.8 Cross-Termination. The City does not desire to lease the Property to Developer pursuant to the Lease without Developer's commitment to develop and purchase the Project pursuant to this Agreement, and Developer does not desire to lease the Property from the City pursuant to the Lease without having the right to develop and acquire the Project pursuant to this Agreement. Therefore, the parties hereto agree that notwithstanding any other provision hereof, in the event (a) the Lease is terminated for any reason (other than termination with respect to a single, conveyed Phase), then this Agreement shall also terminate and be of no further force and effect, except for those obligations that survive termination of this Agreement, and (b) this Agreement is terminated for any reason, then the Lease shall also terminate and be of no further force and effect, except for those obligations that survive termination of the Lease, and in each such case, each party shall be entitled to pursue its applicable rights or remedies, if any, provided for under this Agreement and/or the Lease.

ARTICLE 19
RIGHT OF FIRST REFUSAL

19.1 City Right of First Refusal. If, at any time prior to the ROFR Termination Date (as defined in Section 19.3), Developer receives a bona fide offer from an unaffiliated third-party ("**Offer Party**") to acquire all or any portion of the Property that Developer intends to accept, then Developer shall promptly provide written notice to the City, setting forth the material terms of the offer, including the legal description of the applicable portion of the Property (the "**Offer Land**"), offer price, earnest money deposit, due diligence period, closing time, and other material terms and conditions (the "**Offer Notice**"). The City may elect to acquire all of the Offer Land (but not less than all) in accordance with the same material terms and conditions contained in the Offer Notice, by delivering written notice to Developer of the City's willingness to enter into a contract for the purchase of the Offer Land (the "**Election Notice**") no later than 45 days following the City's receipt of the Offer Notice (the "**Election Deadline**"); provided, however, the City shall not be required to accept any terms for which the City's agreement would constitute a violation of Applicable Rules.

19.2 Contract Negotiation. Within 10 days after Developer's receipt of the City's Election Notice to Developer, Developer shall provide a draft purchase and sale agreement consistent with the material terms of the offer, and the City and Developer shall endeavor in good faith to negotiate a mutually agreeable purchase and sale agreement containing the material terms of the offer ("**Offer Contract**") within 45 days after Developer's receipt of the Election Notice ("**Offer Contract Deadline**"). Each Party shall be responsible for all expenses, including, without limitation, all legal fees, incurred by such Party with respect thereto. The execution and delivery of the Offer Contract will be subject to approval by the Governing Body in accordance with the City Code.

19.3 Termination of Right of First Refusal. The City's right of first refusal under this Article 19 shall terminate with respect to the Offer Land on the earlier of (a) the expiration of the Election Deadline if the City fails to timely deliver its Election Notice for the Offer Land, or (b) the expiration of the Offer Contract Deadline if the City and Developer, despite their commercially reasonable efforts to do so, are unable to agree upon an Offer Contract for the Offer Land following delivery of any Election Notice. Upon any such termination, the City shall have no further right or interest in the Offer Land, and Developer shall thereafter be free to sell or transfer the Offer Land to the Offer Party, subject to this Agreement, the Applicable Rules and matters of record. Notwithstanding the foregoing, if the Offer Party fails to acquire the Offer Land on terms materially consistent with the original offer within 180 days after the referenced termination, the City's option under this Article 19 shall be reinstated with respect to the unacquired Offer Land. The City's right of first refusal under this Article 19 shall expire and be of no further force or effect on the earlier of (i) the fifth anniversary of the Phase 1 Closing Date, or (ii) the date Developer has conveyed all of the Property to one or more unaffiliated third parties in accordance with this Agreement (as applicable, the "**ROFR Termination Date**"). For the avoidance of doubt, prior to the ROFR Termination Date, the City's right of first refusal shall continue with respect any portion of the Property owned by Developer that is not subject to an Offer Contract.

ARTICLE 20
GENERAL PROVISIONS

20.1 Compliance with Laws. Developer shall carry out the design and construction of the Private Improvements and the operation of the Project in conformity with all Applicable Rules, including all applicable state labor standards, building, plumbing, mechanical, and electrical codes, and the Americans With Disabilities Act of 1990 (42 U.S.C. Section 12101, et seq., as amended, the "**ADA**"), as such Applicable Rules exist on the Effective Date or the date of the relevant application or request for permit, as applicable. During any Construction Activities, Developer shall comply, and cause the other Developer Parties to comply, with all Applicable Rules, including the ADA. Developer, through any contractor, agrees to be responsible for knowing all applicable requirements of the ADA and to defend, indemnify and hold harmless the City, its officials, agents and employees from and against any and all claims, actions, suits or proceedings of any kind brought against said parties as a result of any acts or omissions of Developer Parties or its agents in violation of the ADA.

20.2 Discrimination Prohibited. Developer shall comply, and cause the Developer Parties to comply, with Applicable Rules relating to discrimination against or segregation of any Person or group of Person, and will not on the grounds of ethnicity, race, age, religion, creed, color, national origin, ancestry, sex, gender, sexual orientation, sexual preference, marital status, source of income, physical or mental disability, medical condition, or citizenship status, discriminate or permit discrimination against any Person or group of Persons in any manner prohibited by Title 49 CFR Parts

21 and 23, the Civil Rights Act of 1964, as amended, the Equal Pay Act of 1963, the Rehabilitation Act of 1973, the New Mexico Human Rights Act, and SFCC 1987 Section 2.02. Without limiting the generality of the foregoing, Developer will not discriminate against any employee or applicant for employment or tenancy because of ethnicity, race, age, religion, creed, color, national origin, ancestry, sex, gender, sexual orientation, sexual preference, physical or mental disability, medical condition, or citizenship status. Such covered actions include, without limitation: employment, promotion, demotion, or transfer; recruitment or recruitment advertising; layoff or termination; rates of pay or other forms of compensation; selection for training; and disciplinary actions and grievances. Developer agrees to post in conspicuous places available to employees, and applicants for employment, notice to be provided setting forth the provisions of this non-discrimination clause.

20.3 Recordation. Promptly after the later of the Effective Date and the recordation of the Plat, the City shall record an executed original of this Agreement in the real property records of the Clerk's Office of Santa Fe County, New Mexico (the "**Official Records**"). All amendments, transfers, and assignments hereto must be in writing signed by the appropriate officers of the City and Developer in a form suitable for recordation in the Official Records. Upon completion of the Private Improvements based on a Certificate of Completion for the final Phase, or the earlier revocation or termination of this Agreement, the final Certificate of Completion, revocation, or termination shall be signed by the appropriate officers of the City and Developer, and the City shall record such document in the Official Records; provided, however, such document or the recording thereof shall not effect or eliminate any obligations in this Agreement that expressly survive the termination or expiration hereof.

20.4 Covenants Running With the Land. This Agreement, including all covenants, agreements, rights, restrictions and obligations contained herein (subject to certain term limitations as contained in this Agreement) (i) shall run with the Property, (ii) shall be binding upon the Developer, the owner(s) of any portion of the Property, and each of its and their successors (by merger, consolidation, operation of law or otherwise), successors-in-title, assigns, and lessees, whether by operation of law or in any manner whatsoever, and (iii) shall inure to the benefit of the City, as the intended beneficiary of the terms and provisions of this Agreement and of the covenants running with the Property, without regard to whether the City has been, remains, or is an owner of any interest in the Property or the Midtown Site. In the event this Agreement is terminated by the City, this Agreement may be released of record, in whole or in part, upon execution and recording by the City of a notice of termination or other instrument evidencing such termination.

20.5 Notices. Any notice, request, demand, instruction or other document to be given or served hereunder or under any document or instrument executed pursuant hereto shall be in writing and shall be delivered either personally with a receipt requested therefor, or by overnight courier, or by certified mail, return receipt requested, postage prepaid, in any case addressed to the Parties at their respective addresses set forth below, and the same shall be effective (a) upon receipt or refusal if delivered personally, (b) one Business Day after depositing with such an overnight courier service, (c) three Business Days after deposit in the mail if mailed, or (d) upon successful electronic mail transmission evidenced by an electronic "read receipt" and provided that such notice is also delivered by the means described in clauses (a) or (b) within two Business Days after such electronic mail notice. All notices to the City or Developer shall be sent to the persons and addresses set forth below. A Party may change its address for receipt of notices by service of a notice of such change in accordance herewith.

If to the City: City of Santa Fe

Attention: City Attorney's Office
200 Lincoln Avenue
Santa Fe, NM 87501

with a copy to: Midtown Redevelopment Agency
Attention: MRA Director
200 Lincoln Avenue
Santa Fe, NM 87501

If to Developer: Aspect QOZB LLC
Attention: Phillip Gesue
1954 Siringo Road
Santa Fe, NM 87505

with a copy to: Long, Komer & Associates, P.A.
Attention: Nancy R. Long
P.O. Box 5098
1800 Old Pecos Trail, Suite A
Santa Fe, NM 87505

20.6 Relationship Between Parties. Notwithstanding any language in this Agreement or any representation or warranty to the contrary, the relationship between Developer and the City shall be as independent contractors, and neither the City nor Developer shall be deemed or constitute an employee, servant, agent, partner or joint venturer of the other.

20.7 No Third-Party Rights. This Agreement is for the sole and exclusive benefit of the Parties and their respective successors and permitted assigns, and no third party other than a permitted assignee of the City or Developer is contemplated to or shall have any rights hereunder.

20.8 Counterparts. This Agreement may be signed in multiple counterparts or with detachable signature pages, but either or both circumstances shall constitute one instrument, binding upon all parties thereto as if all parties signed the same document. If so executed, each such counterpart of this Agreement is to be deemed an original for all purposes and all such counterparts will collectively constitute one Agreement, but in making proof of this Agreement, it will not be necessary to produce or account for more than one such counterpart.

20.9 Exhibits; Ancillary Documents. All certificates, documents, exhibits, attachments, riders, and addenda referred to in this Agreement are hereby incorporated into this Agreement by reference and made a part hereof as though set forth in full in this Agreement to the extent they are consistent with its conditions and terms. In the event of any conflict between the terms set forth in this Agreement for any exhibit or ancillary document and the terms set forth in the agreed-upon exhibit or ancillary document, the terms of the agreed-upon exhibit or ancillary document, as applicable, shall control.

20.10 Time of Essence. Time is expressly made of the essence with respect to the performance by Developer of every obligation and condition of this Agreement.

20.11 Computation of Time. All references herein to "days" mean calendar days. All references herein to "months" mean the period starting on one day in a calendar month and ending on the numerically corresponding day in the next calendar month, except that, solely with respect to the last month of any period (a) if the numerically corresponding day is not a Business Day, that period will be deemed to end on the next Business Day, (b) if there is no numerically corresponding day in the next calendar month, then that period shall end on the first Business Day after the last day of that month. In computing any period of time under this Agreement in which days define the period, (i) the date of the act or event from which the designated period of time begins to run shall not be included, and (ii) the last day of the period so computed shall be included unless it is a day other than a Business Day, in which event the day for performance thereof shall be extended to the next Business Day. If any act is to be done by or within a period of time, the last day of said period of time shall be deemed to end at 5:00 p.m. MT.

20.12 Effect and Duration of Agreement Provisions. All obligations, covenants and agreements contained herein which are not performed at or before Final Completion of the Project (or any Phase thereof) but which are to be performed after Final Completion of the Project or the Phase, as applicable, as provided in this Agreement, shall survive the Final Completion of the Project or Phase, as applicable. Subject to the foregoing and any other provisions of this Agreement that by their terms expressly survive the performance, expiration or earlier termination of this Agreement, as applicable, the provisions of this Agreement applicable to any Private Improvement Project Specifications shall terminate with respect to each Phase upon the issuance of the Certificate of Completion for such Phase.

20.13 Force Majeure. Neither the City nor Developer shall be deemed to be in default hereunder if either Party is prevented from performing any of the obligations, other than monetary obligations hereunder, by reason of strikes, boycotts, labor disputes, embargoes, industry-wide or regional shortages of labor, energy or materials (to the extent not caused by the failure of any person to adequately plan materials orders or labor allocation as necessitated by the then-current markets therefor), acts of the public enemy, infectious disease or pandemic, weather conditions and the results of acts of nature, riots, rebellion, sabotage, any approval required by the City (not including any period of time normally expected for the processing of such approvals in the ordinary course of affairs), or any other similar circumstances for which it is not responsible or which are not within such Party's control (each a "**Force Majeure Event**"); provided, however, the Parties stipulate and agree that none of the following events or occurrences shall be deemed a Force Majeure Event: (a) the novel coronavirus COVID-19 pandemic (except to the extent the pandemic is the direct cause of any of the delay events listed above), (b) financial distress or the inability of a Party to earn a profit or avoid a financial loss, and (c) a Party's inability to perform its financial obligations hereunder, including Developer's inability to secure funds in an amount sufficient to complete the Private Improvements. An extension of time for any Force Majeure Event shall commence to run from the time of the commencement of the Force Majeure Event if notice by the Party claiming such extension is sent to the other Party within 30 days after said commencement. If such notice is delivered after such 30-day period, the extension period shall commence to run from the date of such notice. After the termination of any such Force Majeure Event, the obligation to perform shall recommence with a day-for-day delay extension to any deadlines.

20.14 Severability. In the event any covenant, condition or provision herein is held to be invalid, illegal, or unenforceable by any court of competent jurisdiction, such covenant, condition or provision shall be deemed amended to conform to Applicable Rules so as to be valid or enforceable or, if it cannot be so amended without materially altering the intention of the parties, it shall be stricken.

If stricken, all other covenants, conditions and provisions of this Agreement shall remain in full force and effect provided that the striking of such covenants, conditions or provisions does not materially prejudice either the City or Developer in its respective rights and obligations contained in the valid covenants, conditions or provisions of this Agreement.

20.15 Interpretation. Whenever the words "include," "includes" or "including" are used in this Agreement they shall be deemed to be followed by the words "without limitation." The words "hereof", "herein" and "hereunder" and words of similar import when used in this Agreement shall refer to this Agreement as a whole and not to any particular provision of this Agreement. Unless otherwise expressly provided herein, any agreement, instrument or statute defined or referred to herein or in any agreement or instrument defined or referred to herein means such agreement, instrument or statute as from time to time amended, modified or supplemented, including (in the case of agreements or instruments) by waiver or consent and (in the case of statutes) by succession of comparable successor statutes, and references to all attachments thereto and instruments incorporated therein.

20.16 Sections. References to section numbers are to sections in this Agreement, unless otherwise expressly stated.

20.17 Gender, Singular/Plural. Words of any gender used in this Agreement shall be held and construed to include any other gender, and words in the singular number shall be held to include the plural, unless the context otherwise requires.

20.18 Headings and Captions. Headings and captions of sections and paragraphs are for convenience, not limitation, and are not to be construed as modifying text.

20.19 Further Assurances. Developer and the City covenant that they shall do, execute, acknowledge and deliver or cause to be done, executed, acknowledged and delivered such instrument, supplemental hereto and further acts, instruments and transfers as may be required hereunder. All such ancillary agreements shall be in accordance with and not contradictory to the terms and conditions set forth in this Agreement.

20.20 Waiver. No provisions of this Agreement shall be deemed to have been waived by either Party unless such waiver is in writing, signed by the Party making the waiver and addressed to the other Party, nor shall any custom or practice which may evolve between the Parties in the administration of the terms of this Agreement be construed to waiver or lessen the right of either Party to insist upon the performance of the other Party in strict accordance with the terms of this Agreement. Further, the waiver by any Party of a breach by the other Party or any term, covenant, or condition hereof shall not operate as a waiver of any subsequent breach of the same or any other term, covenant, or condition thereof. No acceptance by the City of any partial payment shall constitute an accord or satisfaction but shall only be deemed a partial payment.

20.21 Modifications; City Approval. Any amendment, alteration, change or modification of or to this Agreement, in order to become effective, shall be made in writing and in each instance signed on behalf of each Party and, if applicable, approved by the Governing Body and in accordance with any applicable City signature policy. The MRA Director shall record amendments, alterations, changes, and modifications to this Agreement in the Official Records, though a failure to so record shall not impair the effectiveness of such as between the Parties. The MRA Director may extend the time for the performance of any term or satisfaction of any condition hereunder for up to 180 days by the execution of a letter countersigned by Developer. The City Manager may approve changes to the

Project requested by Developer to the extent the value of such changes is not in excess of the City Manager's contractual authority and to the extent equal value is received by the City. At any time during which the MRA Director position is unoccupied or in the event the MRA ceases to exist, references in this Agreement to the "MRA Director" shall be deemed to refer instead to the City Manager who shall fulfill the role and assume the responsibilities of the MRA Director under this Agreement.

20.22 Legal Advice. Each Party represents to the other that it has carefully read this Agreement; and in signing this Agreement, it does so with full knowledge of any right which it may have; it has received independent legal advice from its legal counsel as to the matter set forth in this Agreement; and it has freely signed this Agreement without any reliance upon any agreement, promise, statement or representation by or on behalf of the other Party, or its agents, employees, or attorneys, except as specifically set forth in this Agreement, and without duress or coercion, whether economic or otherwise. This Agreement shall not be construed more strictly against one Party than against the other merely by virtue of the fact that it may have been prepared primarily by counsel for one of the Parties, it being recognized that both the City and Developer have contributed substantially and materially to the preparation of this Agreement.

20.23 Non-Liability of Officials and Employees of the City. No member, official or employee of the City shall be personally liable to Developer, or any successor in interest, in the event of any default or breach by the City or for any amount which may become due to Developer or its successors, or on any obligations under the terms of this Agreement.

20.24 New Mexico Tort Claims Act. The City's liability in connection with the Agreement is limited by the immunities and limitations of the New Mexico Tort Claims Act, Section 41-4-1, et seq. NMSA 1978, as amended. The City and its "public employees", as defined in the New Mexico Tort Claims Act, do not waive sovereign immunity, do not waive any defense, and do not waive any limitation of liability pursuant to law. No provision of this Agreement modifies or waives any provision of the New Mexico Tort Claims Act.

20.25 Governing Law. This Agreement shall be governed by and construed in accordance with the laws of the State of New Mexico.

20.26 Legal Proceedings; Attorneys' Fees and Costs. The Parties agree that the exclusive venue for any claims, disputes, disagreements, controversies, lawsuits, or causes of action by or between Developer and the City arising out of or relating to this Agreement, the Project, the Property, or the Construction Activities (collectively, "**Disputes**"), shall be the First Judicial District Court located in Santa Fe, New Mexico. Any and all Disputes shall be tried as a bench trial and not as a jury trial. In the event it becomes necessary for the City to enforce any of the terms and provisions of this Agreement, whether or not suit be instituted, Developer shall pay all costs and expenses incurred by the City in connection with the City's enforcement of this Agreement, including, but not limited to, reasonable attorneys' fees.

20.27 Waiver of Jury Trial. TO THE EXTENT PERMITTED BY LAW, THE PARTIES HEREBY KNOWINGLY, INTENTIONALLY AND VOLUNTARILY, WITH AND UPON THE ADVICE OF COMPETENT COUNSEL, WAIVE, RELINQUISH AND FOREVER FORGO THE RIGHT TO A TRIAL BY JURY IN ANY ACTION OR PROCEEDING BASED UPON, ARISING OUT OF, OR IN ANY WAY RELATING TO A DISPUTE.

EACH PARTY ACKNOWLEDGES AND AGREES THAT ANY DISPUTE WHICH MAY ARISE UNDER THIS AGREEMENT IS LIKELY TO INVOLVE COMPLICATED AND DIFFICULT ISSUES, AND THEREFORE IT HEREBY IRREVOCABLY AND UNCONDITIONALLY WAIVES ANY RIGHT IT MAY HAVE TO A TRIAL BY JURY IN RESPECT OF ANY LITIGATION DIRECTLY OR INDIRECTLY ARISING OUT OF OR RELATING TO ANY DISPUTE. EACH PARTY CERTIFIES AND ACKNOWLEDGES THAT (A) NO REPRESENTATIVE, AGENT OR ATTORNEY OF ANY OTHER PARTY HAS REPRESENTED, EXPRESSLY OR OTHERWISE, THAT SUCH OTHER PARTY WOULD NOT, IN THE EVENT OF LITIGATION, SEEK TO ENFORCE SUCH WAIVERS; (B) IT UNDERSTANDS AND HAS CONSIDERED THE IMPLICATIONS OF SUCH WAIVERS; (C) IT MAKES SUCH WAIVERS VOLUNTARILY; AND (D) IT HAS BEEN INDUCED TO ENTER INTO THIS AGREEMENT BY, AMONG OTHER THINGS, THE MUTUAL WAIVERS AND CERTIFICATIONS IN THIS SECTION 20.27.

20.28 Approval Required. This Agreement shall not become effective or binding until approved by the highest approval authority required by the City under this Agreement.

20.29 Appropriations. Notwithstanding any other provisions in this Agreement, the terms of this Agreement are contingent upon the Governing Body making the appropriations necessary for the performance of this Agreement. If sufficient appropriations and authorizations are not made by the Governing Body, or if unspent appropriations from any prior fiscal year are not appropriated in the then current fiscal year, this Agreement may be terminated upon 30 days' written notice given by the City to Developer. Such event shall not constitute a City Default or other default by the City. All obligations of the City and all of its interest in this Agreement will cease upon the date of termination. The City's decision as to whether sufficient appropriations are available shall be accepted by all parties and shall be final.

20.30 No Pecuniary Liability of City. No provision of this Agreement shall constitute an indebtedness of the City within the meaning of any constitutional provision or statutory limitations of the State of New Mexico, nor constitute or give rise to a pecuniary liability of the City or a charge against its general credit or taxing powers.

20.31 Officials, Agents and Employees Not Personally Liable. No official, agent, or employee of the City nor member of the Governing Body shall be personally liable to any person by virtue of any provision of this Agreement.

20.32 No Collusion. Developer represents that this Agreement is entered into by Developer without collusion on the part of Developer with any person or firm, without fraud and in good faith. Developer also represents that no gratuities, in the form of entertainment, gifts or otherwise, were, or during the term of this Agreement, will be offered or given by Developer or any agent or representative of Developer to any officer or employee of the City with a view towards securing this Agreement or for securing more favorable treatment with respect to making any determinations with respect to performing this Agreement.

20.33 Public Records. The Parties acknowledge that the City is a government entity and subject to the IPRA. Notwithstanding anything contained herein to the contrary, the City shall not be responsible to Developer or any third-party contractor for any disclosure of confidential information pursuant to the IPRA or pursuant to the City's public records act laws, rules, regulations, instructions or other legal requirement.

20.34 Governmental Right and Powers. Nothing in this Agreement will be construed or interpreted as limiting, relinquishing, or waiving any rights of ownership enjoyed by the City in the Property or waiving or limiting the City's control over the management, operations or maintenance of the Property, except as specifically provided in this Agreement, or impairing exercising or defining governmental rights and the police powers of the City.

20.35 Survival. All obligations, covenants and agreements contained herein which are intended to be performed in whole or in part after the completion of construction of the Project or termination of this Agreement shall survive the completion of construction of the Project or termination of this Agreement and shall be binding upon and inure to the benefit of the Parties hereto and their respective successors and permitted assigns.

[*Remainder of this page intentionally left blank*]
[*Signatures and acknowledgements appear on the following pages*]

IN WITNESS WHEREOF, this Agreement has been executed and delivered by the City and Developer as of the Effective Date.

Date of City of Santa Fe Governing Body
Approval: _____, 20__

CITY:

CITY OF SANTA FE,
a municipal corporation and political subdivision of the State of New Mexico

By: _____

Mayor

APPROVED AS TO FORM:

By: _____
Assistant City Attorney

ATTEST:

By: _____
City Clerk

STATE OF NEW MEXICO }
} ss.
COUNTY OF SANTA FE }

This instrument was acknowledged before me on _____, 20__ by _____, as _____ of City of Santa Fe, a municipal corporation and political subdivision of the State of New Mexico.

(Seal, if any)

_____
(Signature of Notarial Officer)

[*Signatures and acknowledgements continue on the following page*]

DEVELOPER:

ASPECT QOZB, LLC,
a Delaware limited liability company

By:_____
Name: Phillip Gesue
Title: Managing Member

STATE OF NEW MEXICO }
} ss.
COUNTY OF SANTA FE }

This instrument was acknowledged before me on October 24, 2024 by Phillip Gesue as Managing Member of Aspect QOZB, LLC, a Delaware limited liability company.

(Seal, if any)

_____
(Signature of Notarial Officer)

STATE OF NEW MEXICO
NOTARY PUBLIC
KANDRA LYNN PAYNE
COMMISSION # 1139277
COMMISSION EXPIRES 12/02/2026

[DEVELOPER SIGNATURE PAGE AND ACKNOWLEDGMENT]

JOINDER OF DEVELOPER'S PRINCIPAL

FOR GOOD AND VALUABLE CONSIDERATION as set forth in this Development and Disposition Agreement, the receipt and sufficiency of which is hereby acknowledged, PHILLIP GESUE, as Developer's Principal, hereby joins in the execution of this Agreement in order to evidence and confirm its agreement to be bound by the provisions hereof relating to or expressly obligating Developer under Section 14.3 hereof.

Developer's Principal, by its execution hereof, agrees that it shall be personally liable and responsible to the City for Developer's default under Section 14.3 of this Agreement. Nothing contained in this Joinder shall be deemed to waive, release, limit, or otherwise modify any obligation or liability that Developer currently has or may have in the future pursuant to this Agreement or any binding agreement between the City and Developer or any other Person or any obligation or liability arising under or pursuant to law or equity.

Phillip Gesue

[DEVELOPER SIGNATURE PAGE AND ACKNOWLEDGMENT]

EXHIBIT A

DEPICTION OF THE MIDTOWN SITE

[attached]

Lot Line Adjustment to Create Right-of-Way

for PLAT OF EXISTING
College of Santa Fe
within Projected Section 34, T.17N., R.9E., N.M.P.M.
City of Santa Fe
Santa Fe County, New Mexico
August 2024



VICINITY MAP
N.T.S.

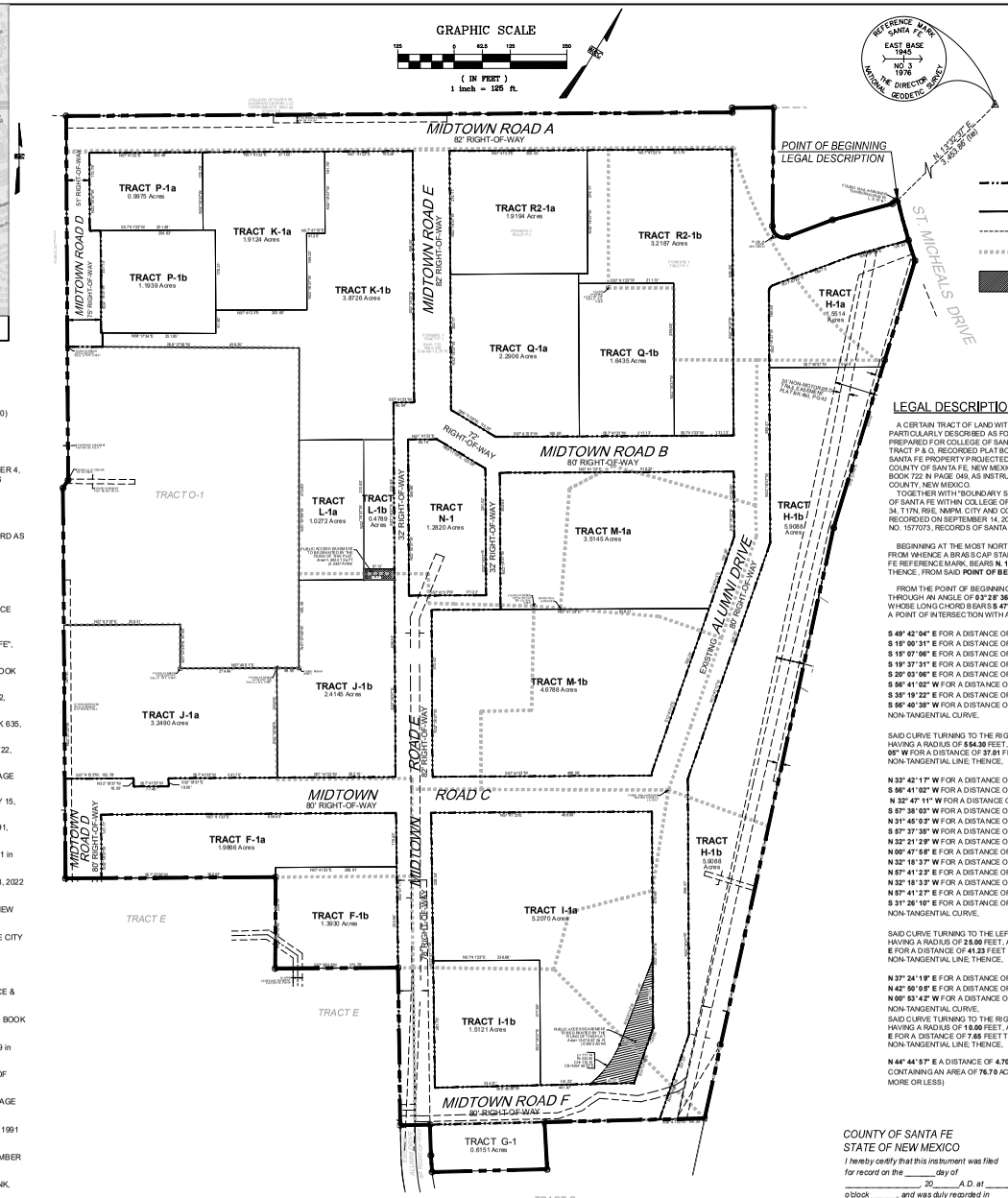

LEGEND:

- RIGHT-OF-WAY, TO BE DEDICATED BY THE FILING OF THIS PLAT.
- NEW LOT LINE
- EASEMENT LINE (AS NOTED)
- LOT LINE TO BE ELIMINATED
- PUBLIC ACCESS EASEMENT TO BE GRANTED BY THE FILING OF THIS PLAT.

NOTES:

1. FIELD SURVEY WAS PERFORMED NOVEMBER 2021.
2. BEARINGS ARE NEW MEXICO STATE PLANE, CENTRAL ZONE. DISTANCES ARE GROUND DISTANCES. COMBINED GRID TO GROUND SCALE FACTOR: 1.000406253 (SCALED AROUND 0,0) BASED ON A LINE FROM "SANTA FE EAST BASE RM3" TO "BM B-439, 1984", BEARING = S.49°38'22"W.
3. BENCHMARK USED FOR THIS PROJECT IS "SANTA FE EAST BASE RM3".
4. FEDERAL FLOODPLAIN MAP 35049C0411E WITH AN EFFECTIVE DATE OF DECEMBER 4, 2012 AS PUBLISHED BY THE FEDERAL EMERGENCY AGENCY SHOW THIS SITE AS BEING WITHIN ZONE X (DETERMINED TO BE OUTSIDE THE 0.2% ANNUAL CHANCE FLOODPLAIN).
5. THIS PLAT SHOWS ALL AVAILABLE RECORD OF EASEMENTS.
6. THIS PLAT SUBJECT TO RESTRICTIONS, COVENANTS AND EASEMENTS OF RECORD AS SHOWN ON PLATS REFERENCED HEREON.

REFERENCED DOCUMENTS:

THE FOLLOWING DOCUMENTS AND INSTRUMENTS WERE USED FOR THE PERFORMANCE AND PREPARATION OF THIS PLAT:

1. PLAT OF SURVEY ENTITLED, "REPLAT PREPARED FOR THE COLLEGE OF SANTA FE", recorded SEPTEMBER 14, 2006 in PLAT BOOK 707, PAGE 050-051.
2. DIVISION PLAT FOR THE COLLEGE OF SANTA FE, recorded MAY 19, 2006 in PLAT BOOK 682, PAGE 06.
3. REPLAT FOR COLLEGE OF SANTA FE, recorded JANUARY 2, 2006 in PLAT BOOK 672, PAGE 33.
4. REPLAT FOR COLLEGE OF SANTA FE, recorded SEPTEMBER 19, 2006 in PLAT BOOK 635, PAGE 46, 47.
5. REPLAT FOR COLLEGE OF SANTA FE, recorded OCTOBER 12, 2010 in PLAT BOOK 722, PAGE 049.
6. REPLAT FOR COLLEGE OF SANTA FE, recorded OCTOBER 12, 2010 in BOOK 719, PAGE 044.
7. BOUNDARY EASEMENT SURVEY PLAT FOR COLLEGE OF SANTA FE, recorded JULY 15, 2010 in BOOK 719, PAGE 047.
8. PLAT OF ALTA/ACSM LAND TITLE SURVEY, recorded OCTOBER 10, 2008 in BOOK 691, PAGE 029.
9. BOUNDARY SURVEY OF TRACT E "COLLEGE OF SANTA FE", recorded JUNE 28, 2011 in BOOK 735, PAGE 045.
10. BOUNDARY SURVEY OF TRACT E "COLLEGE OF SANTA FE", recorded OCTOBER 28, 2022 in BOOK 896, PAGE 14.
11. PLAT OF EASEMENT SURVEY FOR COLLEGE OF THE CHRISTIAN BROTHERS OF NEW MEXICO, recorded 08/17/2009.
12. REPLAT OF TRACT 3A & 3B FOR COLLEGE OF THE BOARD OF EDUCATION OF THE CITY OF SANTA FE, recorded MARCH 12, 1991 in BOOK 220, PAGE 037.
13. BOUNDARY SURVEY PLAT FOR PRESBYTERIAN MEDICAL SERVICES, recorded NOVEMBER 30, 2004 in BOOK 574, PAGE 035.
14. LOT CONSOLIDATION FOR THE STATE OF NEW MEXICO DEPARTMENT OF FINANCE & ADMINISTRATION, recorded OCTOBER 4, 1990 in BOOK 215, PAGE 013.
15. QUITCLAIM DEED from U.S.A. to COLLEGE OF THE CHRISTIAN, filed MAY 23, 1949 in BOOK 40, PAGE 437.
16. DECLARATION from U.S.A. to COLLEGE OF THE CRISTIAN, filed DECEMBER 22, 1969 in BOOK 269, PAGE 855.
17. SPECIAL WARRANTY DEED from COLLEGE OF THE CRISTIAN BROTHERS to CITY OF SANTA FE, filed SEPTEMBER 16, 2009 as INSTRUMENT 1577356.
18. EASEMENT from COLLEGE OF SANTA FE to PNM, filed JULY 9, 1990 in BOOK 682, PAGE 916.
19. EASEMENT from COLLEGE OF SANTA FE to BOARD OF EDUCATION, filed JUNE 10, 1991 in BOOK 730, PAGE 568.
20. EASEMENT from COLLEGE OF SANTA FE to FIRST COMMUNITY BANK, filed SEPTEMBER 21, 2007 as INSTRUMENT 1500540.
21. VACATION OF EASEMENT from COLLEGE OF SANTA FE to FIRST COMMUNITY BANK, filed JULY 20, 2009 as INSTRUMENT 1571651.
22. EASEMENT from COLLEGE OF SANTA FE to PNM, filed AUGUST 13, 1996 in BOOK 1299, PAGE 74.
23. EASEMENT from COLLEGE OF SANTA FE to NEW MEXICO STATE BANK , filed JUNE 12, 2009 as INSTRUMENT 1566667.
24. VACATION OF EASEMENT from COLLEGE OF SANTA FE to FIRST COMMUNITY BANK, filed AUGUST 17, 2009 as INSTRUMENT 1574183.

LEGAL DESCRIPTION:

A CERTAIN TRACT OF LAND WITHIN THE PERIMETER BEING MORE PARTICULARLY DESCRIBED AS FOLLOWS, ALL AS SHOWN ON "REPLAT PREPARED FOR COLLEGE OF SANTA FE, LOT LINE ADJUSTMENT OF EXISTING TRACT P & O, RECORDED PLAT BOOK 707, PAGES 50-50A WITHIN COLLEGE OF SANTA FE PROPERTY PROJECTED SECTION 34, T17N, R9E, NMPM, CITY AND COUNTY OF SANTA FE, NEW MEXICO." RECORDED ON OCTOBER 12, 2010 IN BOOK 722 IN PAGE 049, AS INSTRUMENT NO. 1613544, RECORDS OF SANTA FE COUNTY, NEW MEXICO.

TOGETHER WITH "BOUNDARY SURVEY PLAT PREPARED FOR THE COLLEGE OF SANTA FE WITHIN COLLEGE OF SANTA FE PROPERTY PROJECTED SECTION 34, T17N, R9E, NMPM, CITY AND COUNTY OF SANTA FE, NEW MEXICO". RECORDED ON SEPTEMBER 14, 2009 IN BOOK 707 IN PAGE 50, AS INSTRUMENT NO. 1577073, RECORDS OF SANTA FE COUNTY, NEW MEXICO:

BEGINNING AT THE MOST NORTHEASTERLY CORNER OF SAID PERIMETER FROM WHENCE A BRASS CAP STAMPED "EAST BASE 1945, NO 3 1976" A SANTA FE REFERENCE MARK, BEARS **N. 13°32'37" E.**, A DISTANCE OF **3,493.86** FEET; THENCE, FROM SAID **POINT OF BEGINNING**,

FROM THE POINT OF BEGINNING, SAID CURVE TURNING TO THE LEFT THROUGH AN ANGLE OF **93° 28' 36"**, HAVING A RADIUS OF **1516.95** FEET, AND WHOSE LONG CHORD BEARS **S. 47° 01' 15" E** FOR A DISTANCE OF **92.03** FEET TO A POINT OF INTERSECTION WITH A NON-TANGENTIAL LINE; THENCE,

S 49° 42' 04" E FOR A DISTANCE OF 47.26 FEET TO AN ANGLE POINT; THENCE, **S 15° 00' 31" E** FOR A DISTANCE OF 230.86FEET TO AN ANGLE POINT; THENCE, **S 15° 07' 06" E** FOR A DISTANCE OF 389.2446 FEET TO AN ANGLE POINT; THENCE, **S 19° 37' 31" E** FOR A DISTANCE OF 1175.00 FEET TO AN ANGLE POINT; THENCE, **S 20° 03' 06" E** FOR A DISTANCE OF 166.82 FEET TO AN ANGLE POINT; THENCE, **S 56° 41' 02" W** FOR A DISTANCE OF 355.80 FEET TO AN ANGLE POINT; THENCE, **S 35° 19' 22" E** FOR A DISTANCE OF **105.04** FEET TO AN ANGLE POINT; THENCE, **S 56° 40' 38" W** FOR A DISTANCE OF **255.28** FEET TO THE BEGINNING OF A NON-TANGENTIAL CURVE,

SAID CURVE TURNING TO THE RIGHT THROUGH AN ANGLE OF **03° 49' 35"**, HAVING A RADIUS OF **5 54.30** FEET, AND WHOSE LONG CHORD BEARS **N 36° 13' 05" W** FOR A DISTANCE OF **37.01** FEET TO A POINT OF INTERSECTION WITH A NON-TANGENTIAL LINE; THENCE,

N 33° 42' 17" W FOR A DISTANCE OF **68.04** FEET TO AN ANGLE POINT; THENCE, **S 56° 41' 02" W** FOR A DISTANCE OF **66.00** FEET TO AN ANGLE POINT; THENCE, **N 32° 47' 11" W** FOR A DISTANCE OF **350.05** FEET TO AN ANGLE POINT; THENCE, **S 57° 38' 03" W** FOR A DISTANCE OF **27.275** FEET TO AN ANGLE POINT; THENCE, **N 31° 45' 03" W** FOR A DISTANCE OF **252.87** FEET TO AN ANGLE POINT; THENCE, **S 57° 37' 35" W** FOR A DISTANCE OF **466.63** FEET TO AN ANGLE POINT; THENCE, **N 32° 21' 29" W** FOR A DISTANCE OF **866.72** FEET TO AN ANGLE POINT; THENCE, **N 00° 47' 58" E** FOR A DISTANCE OF **21.00** FEET TO AN ANGLE POINT; THENCE, **N 32° 18' 37" W** FOR A DISTANCE OF **808.06** FEET TO AN ANGLE POINT; THENCE, **N 57° 41' 23" E** FOR A DISTANCE OF **1478.51** FEET TO AN ANGLE POINT; THENCE, **N 32° 18' 33" W** FOR A DISTANCE OF **10.00** FEET TO AN ANGLE POINT; THENCE, **N 57° 41' 27" E** FOR A DISTANCE OF **91.54** FEET TO AN ANGLE POINT; THENCE, **S 31° 26' 19" E** FOR A DISTANCE OF **263.07** FEET TO THE BEGINNING OF A NON-TANGENTIAL CURVE,

SAID CURVE TURNING TO THE LEFT THROUGH AN ANGLE OF **111° 0'6' 12"**, HAVING A RADIUS OF **25.00** FEET, AND WHOSE LONG CHORD BEARS **S 87° 04' 17" E** FOR A DISTANCE OF **41.23** FEET TO A POINT OF INTERSECTION WITH A NON-TANGENTIAL LINE THENCE,

N 37° 24' 19" E FOR A DISTANCE OF **106.67** FEET TO AN ANGLE POINT; THENCE, **N 42° 50' 05" E** FOR A DISTANCE OF **137.50** FEET TO AN ANGLE POINT; THENCE, **N 00° 53' 42" W** FOR A DISTANCE OF **2.51** FEET TO THE BEGINNING OF A NON-TANGENTIAL CURVE,
SAID CURVE TURNING TO THE RIGHT THROUGH AN ANGLE OF **44° 58' 38. 1"**, HAVING A RADIUS OF **10.00** FEET, AND WHOSE LONG CHORD BEARS **N 21° 36' 18" E** FOR A DISTANCE OF **7.85** FEET TO A POINT OF INTERSECTION WITH A NON-TANGENTIAL LINE THENCE,

N 44° 44' 57" E A DISTANCE OF **4.70** FEET TO THE **POINT OF BEGINNING** AND CONTAINING AN AREA OF **76.70** ACRES, MORE OR LESS (**3,341,172.67** SQ. FT., MORE OR LESS)

STATEMENT OF DECLARATION:

THE PURPOSE OF THIS PLAT IS TO:

ADJUST LOT LINES AND TO DEDICATE RIGHT-OF-WAY, AS SHOWN HEREON.

AFFIDAVIT:

KNOW ALL MEN BY THESE PRESENTS THAT THE UNDERSIGNED OWNER HAS CAUSED TO BE REPLATTED THOSE LANDS SHOWN HEREON. THE SAID REPLAT IS MADE WITH THE FREE CONSENT AND IN ACCORDANCE WITH THE DESIRES OF THE SAID OWNER. THIS REPLAT CONTAINS 4.88 ACRES, MORE OR LESS. ALL TRACTS SHOWN HEREON ARE SUBJECT TO RECIPROCAL PRIVATE ACCESS AND PARKING EASEMENTS ALONG AND OVER EXISTING DRIVEWAYS AND PARKING AREAS. EASEMENTS ARE GRANTED FOR EXISTING UTILITIES. THERE IS NO ROAD DEDICATION.
THIS REPLAT LIES WITHIN THE PLANNING AND PLATTING JURISDICTION OF THE CITY OF SANTA FE, N.M.

OWNER: _____

BY: _____ ALAN WEBBER, MAYOR DATE: _____

CITY CLERK: _____ DATE: _____

STATE OF NEW MEXICO
COUNTY OF SANTA FE
THE FOREGOING INSTRUMENT WAS SWORN, ACKNOWLEDGED AND SUBSCRIBED BEFORE ME ON THIS _____ DAY OF _____, 20____.

NOTARY PUBLIC _____ MY COMMISSION EXPIRES _____

REVIEWED BY COUNTY OF SANTA FE:

COUNTY TREASURER _____ DATE: _____

REVIEWED BY CITY OF SANTA FE:

CITY ENGINEER FOR LAND USE _____ DATE: _____

CITY PLANNER _____ DATE: _____

COUNTY OF SANTA FE
STATE OF NEW MEXICO } SS

I hereby certify that this instrument was filed for record on the _____ day of _____ 20____ A.D. at _____ o'clock _____, and was duly recorded in book _____ page(s) _____ of the records of Santa Fe County.

Witness my Hand and Seal of office
KATHARINE E. CLARK
County Clerk, Santa Fe county, N.M.

_____
Deputy

County Clerk

Seal

SURVEYOR'S CERTIFICATION:

I, BENJAMIN M. ARAGON, NEW MEXICO PROFESSIONAL SURVEYOR No. 15268, DO HEREBY CERTIFY THAT THIS BOUNDARY SURVEY PLAT AND THE ACTUAL SURVEY ON THE GROUND UPON WHICH IT IS BASED WERE PERFORMED BY ME OR UNDER MY DIRECT SUPERVISION; THAT I AM RESPONSIBLE FOR THIS SURVEY; THAT THIS SURVEY MEETS THE MINIMUM STANDARDS FOR SURVEYING IN NEW MEXICO; AND THAT IT IS TRUE AND CORRECT TO THE BEST OF MY KNOWLEDGE AND BELIEF. I FURTHER CERTIFY THAT THIS SURVEY IS NOT A LAND DIVISION OR SUBDIVISION AS DEFINED IN THE NEW MEXICO SUBDIVISION ACT AND THAT THIS INSTRUMENT IS A BOUNDARY SURVEY PLAT OF AN EXISTING TRACT OR TRACTS.

_____
BENJAMIN M. ARAGON N.M.P.L.S. #15268

_____
DATE

NEW MEXICO 15268 BENJAMIN M. ARAGON REGISTERED PROFESSIONAL SURVEYOR

WILSON & COMPANY
4401 MASTHEAD ST. NE, SUITE 150
ALBUQUERQUE, NEW MEXICO 87109
OFFICE: 505-348-4000
FAX: 505-348-4155
www.wilsonco.com

EXHIBIT B-1

DEPICTION OF THE PROPERTY

The following Tracts, as depicted on the following maps, comprise Phase 1, Phase 2 and Phase 3 of the Property, as follows:

Phase 1:	Phase 2:	Phase 3:
Tract F-1b	Tract F-1a	Tract G-1
Tract I-1a		Tract I-1b
Tract L-1a		

Lot Split to create
TRACTS F-1a and F-1b
LOT LINE ADJUSTMENT PLAT OF EXISTING
TRACT F and TRACT J
within Projected Section 34, T.17N., R.9E., N.M.P.M.
City of Santa Fe
Santa Fe County, New Mexico
August 2024

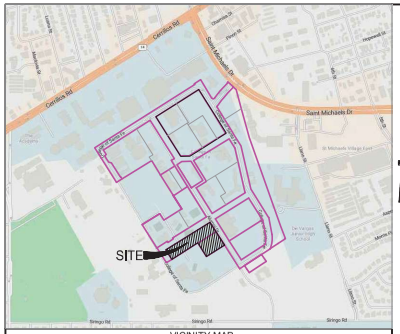

VICINITY MAP
N.T.S.

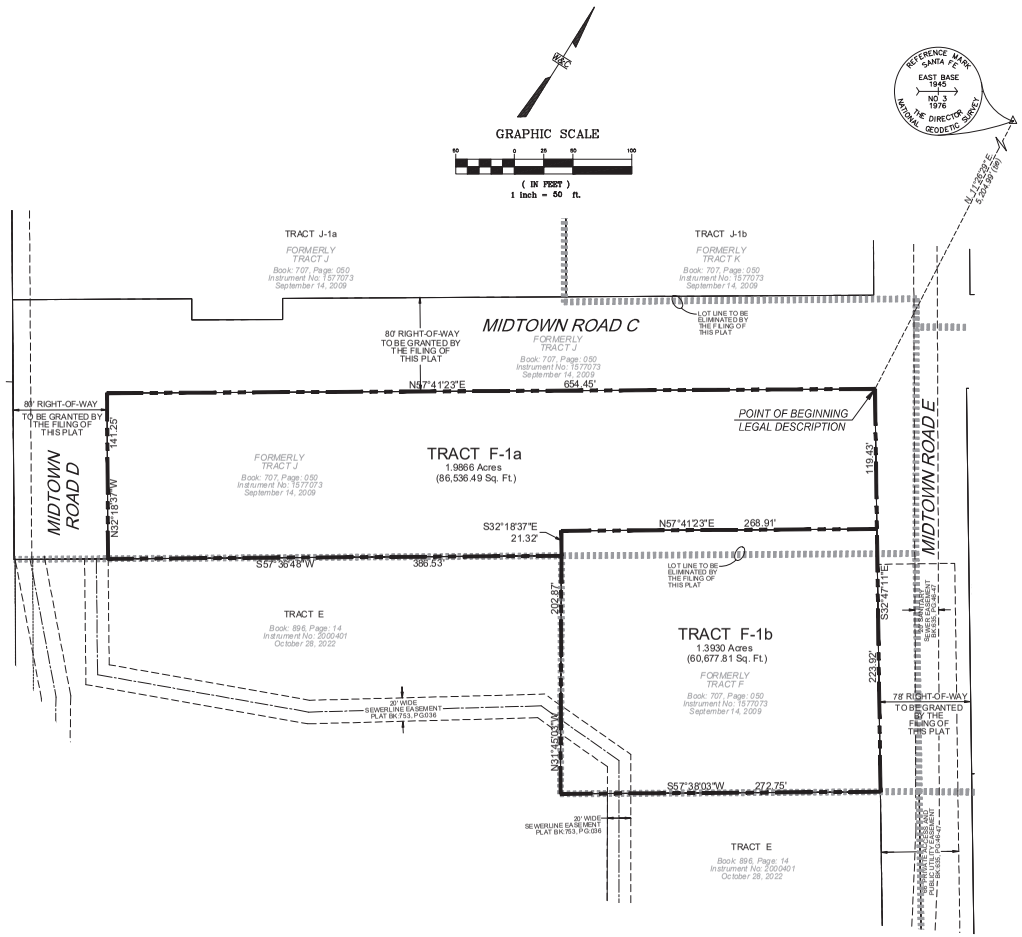

NOTES:

1. FIELD SURVEY WAS PERFORMED NOVEMBER 2021.
2. BEARINGS ARE NEW MEXICO STATE PLANE, CENTRAL ZONE. DISTANCES ARE GROUND DISTANCES. COMBINED GRID TO GROUND SCALE FACTOR: 1.000406253 (SCALED AROUND 0,0) BASED ON A LINE FROM "SANTA FE EAST BASE RM3" TO "BM B-439, 1984", BEARING = S.49°38'22"W.
3. BENCHMARK USED FOR THIS PROJECT IS "SANTA FE EAST BASE RM3".
4. FEDERAL FLOODPLAIN MAP 35049C0411E WITH AN EFFECTIVE DATE OF DECEMBER 4, 2012 AS PUBLISHED BY THE FEDERAL EMERGENCY AGENCY SHOW THIS SITE AS BEING WITHIN ZONE X (DETERMINED TO BE OUTSIDE THE 0.2% ANNUAL CHANCE FLOODPLAIN).
5. THIS PLAT SHOWS ALL AVAILABLE RECORD OF EASEMENTS.
6. THIS PLAT SUBJECT TO RESTRICTIONS, COVENANTS AND EASEMENTS OF RECORD AS SHOWN ON PLATS REFERENCED HEREON.

REFERENCED DOCUMENTS:

THE FOLLOWING DOCUMENTS AND INSTRUMENTS WERE USED FOR THE PERFORMANCE AND PREPARATION OF THIS PLAT:

1. PLAT OF SURVEY ENTITLED, "REPLAT PREPARED FOR THE COLLEGE OF SANTA FE", recorded SEPTEMBER 14, 2006 in PLAT BOOK 707, PAGE 050-051.
2. DIVISION PLAT FOR THE COLLEGE OF SANTA FE, recorded MAY 19, 2006 in PLAT BOOK 682, PAGE 06.
3. REPLAT FOR COLLEGE OF SANTA FE, recorded JANUARY 2, 2006 in PLAT BOOK 672, PAGE 33.
4. REPLAT FOR COLLEGE OF SANTA FE, recorded SEPTEMBER 19, 2006 in PLAT BOOK 635, PAGE 46, 47.
5. REPLAT FOR COLLEGE OF SANTA FE, recorded OCTOBER 12, 2010 in PLAT BOOK 722, PAGE 049.
6. REPLAT FOR COLLEGE OF SANTA FE, recorded OCTOBER 12, 2010 in BOOK 719, PAGE 044.
7. BOUNDARY EASEMENT SURVEY PLAT FOR COLLEGE OF SANTA FE, recorded JULY 15, 2010 in BOOK 719, PAGE 047.
8. PLAT OF ALTA/ACSM LAND TITLE SURVEY, recorded OCTOBER 10, 2008 in BOOK 691, PAGE 029.
9. BOUNDARY SURVEY OF TRACT E "COLLEGE OF SANTA FE", recorded JUNE 28, 2011 in BOOK 735, PAGE 045.
10. BOUNDARY SURVEY OF TRACT E "COLLEGE OF SANTA FE", recorded OCTOBER 28, 2022 in BOOK 896, PAGE 14.
11. PLAT OF EASEMENT SURVEY FOR COLLEGE OF THE CHRISTIAN BROTHERS OF NEW MEXICO, recorded 08/17/2009.
12. REPLAT OF TRACT 3A & 3B FOR COLLEGE OF THE BOARD OF EDUCATION OF THE CITY OF SANTA FE, recorded MARCH 12, 1991 in BOOK 220, PAGE 037.
13. BOUNDARY SURVEY PLAT FOR PRESBYTERIAN MEDICAL SERVICES, recorded NOVEMBER 30, 2004 in BOOK 574, PAGE 035.
14. LOT CONSOLIDATION FOR THE STATE OF NEW MEXICO DEPARTMENT OF FINANCE & ADMINISTRATION, recorded OCTOBER 4, 1990 in BOOK 215, PAGE 013.
15. QUITCLAIM DEED from U.S.A. to COLLEGE OF THE CHRISTIAN, filed MAY 23, 1949 in BOOK 40, PAGE 437.
16. DECLARATION from U.S.A. to COLLEGE OF THE CRISTIAN, filed DECEMBER 22, 1969 in BOOK 269, PAGE 855.
17. SPECIAL WARRANTY DEED from COLLEGE OF THE CRISTIAN BROTHERS to CITY OF SANTA FE, filed SEPTEMBER 16, 2009 as INSTRUMENT 1577356.
18. EASEMENT from COLLEGE OF SANTA FE to PNM, filed JULY 9, 1990 in BOOK 682, PAGE 916.
19. EASEMENT from COLLEGE OF SANTA FE to BOARD OF EDUCATION, filed JUNE 10, 1991 in BOOK 730, PAGE 568.
20. EASEMENT from COLLEGE OF SANTA FE to FIRST COMMUNITY BANK, filed SEPTEMBER 21, 2007 as INSTRUMENT 1500540.
21. VACATION OF EASEMENT from COLLEGE OF SANTA FE to FIRST COMMUNITY BANK, filed JULY 20, 2009 as INSTRUMENT 1571651.
22. EASEMENT from COLLEGE OF SANTA FE to PNM, filed AUGUST 13, 1996 in BOOK 1299, PAGE 74.
23. EASEMENT from COLLEGE OF SANTA FE to NEW MEXICO STATE BANK , filed JUNE 12, 2009 as INSTRUMENT 1566667.
24. VACATION OF EASEMENT from COLLEGE OF SANTA FE to FIRST COMMUNITY BANK, filed AUGUST 17, 2009 as INSTRUMENT 1574183.

LEGAL DESCRIPTION:

A CERTAIN TRACT OF LAND WITHIN THE PERIMETER BEING MORE PARTICULARLY DESCRIBED AS FOLLOWS, ALL AS SHOWN ON "BOUNDARY SURVEY PLAT PREPARED FOR THE COLLEGE OF SANTA FE WITHIN COLLEGE OF SANTA FE PROPERTY PROJECTED SECTION 34, T17N, R9E, NMPM. CITY AND COUNTY OF SANTA FE, NEW MEXICO", RECORDED ON SEPTEMBER 14, 2009 IN BOOK 707 IN PAGE 50, AS INSTRUMENT NO. 1577073, RECORDS OF SANTA FE COUNTY, NEW MEXICO:

BEGINNING AT THE MOST NORTHERLY CORNER OF SAID PERIMETER FROM WHENCE A BRASS CAP STAMPED "EAST BASE 1945, NO 3 1976" A SANTA FE REFERENCE MARK, BEARS **N. 11°26'29" E.**, A DISTANCE OF **5,204.99** FEET; THENCE, FROM SAID POINT OF BEGINNING,

S. 32°47'11" E., A DISTANCE OF **343.35** FEET TO AN ANGLE POINT; THENCE,

S. 57°38'03" W., A DISTANCE OF **272.75** FEET TO AN ANGLE POINT; THENCE,

N. 31°48'15" W., A DISTANCE OF **224.19** FEET TO AN ANGLE POINT; THENCE,

S. 57°37'35" W., A DISTANCE OF **386.53** FEET TO AN ANGLE POINT; THENCE,

N. 32°18'37" W., A DISTANCE OF **141.17** FEET TO AN ANGLE POINT; THENCE,

N. 57°41'23" E., A DISTANCE OF **654.45** FEET TO THE POINT OF BEGINNING AND CONTAINING AN AREA OF **3.3796** ACRES , MORE OR LESS (**147,214.30** SQ. FT., MORE OR LESS)

LEGEND:

- FOUND: REBAR w/CAP (DESCRIPTION, AS NOTED)
- NEW LOT LINE
- LOT LINE TO BE ELIMINATED
- EASEMENT LINE (AS NOTED)

COUNTY OF SANTA FE }SS
STATE OF NEW MEXICO

I hereby certify that this instrument was filed for record on the _____ day of _____, 20_____A.D. at _____ o'block _____, and was duly recorded in book _____ page(s)_____ of the records of Santa Fe County.

Witness my Hand and Seal of office
KATHARINE E. CLARK
County Clerk, Santa Fe county, N.M.

_____
Deputy

County Clerk
Seal

STATEMENT OF DECLARATION:

THE PURPOSE OF THIS PLAT IS TO:

REPLAT TRACT F-1a AND F-1b, BY LOT LINE ADJUSTMENT AND/OR LOT SPLIT FROM THE ORIGINAL CONFIGURATION & TO DEDICATE RIGHT-OF-WAY, AS SHOWN HEREON.

AFFIDAVIT:

KNOW ALL MEN BY THESE PRESENTS THAT THE UNDERSIGNED OWNER HAS CAUSED TO BE REPLATTED THOSE LANDS SHOWN HEREON. THE SAID REPLAT IS MADE WITH THE FREE CONSENT AND IN ACCORDANCE WITH THE DESIRES OF THE SAID OWNER. THIS REPLAT CONTAINS 4.88 ACRES, MORE OR LESS. ALL TRACTS SHOWN HEREON ARE SUBJECT TO RECIPROCAL PRIVATE ACCESS AND PARKING EASEMENTS ALONG AND OVER EXISTING DRIVEWAYS AND PARKING AREAS. EASEMENTS ARE GRANTED FOR EXISTING UTILITIES. THERE IS NO ROAD DEDICATION.
THIS REPLAT LIES WITHIN THE PLANNING AND PLATTING JURISDICTION OF THE CITY OF SANTA FE, N.M.

OWNER: _____

_____
BY: ALAN WEBBER, MAYOR DATE:

_____
CITY CLERK: DATE:

STATE OF NEW MEXICO
COUNTY OF SANTA FE
THE FOREGOING INSTRUMENT WAS SWORN, AOKNOWLEDGED AND SUBSCRIBED BEFORE ME ON THIS _____ DAY OF _____, 20____.

_____
NOTARY PUBLIC MY COMMISSION EXPIRES

REVIEWED BY COUNTY OF SANTA FE:

_____
COUNTY TREASURER DATE:

REVIEWED BY CITY OF SANTA FE:

_____
CITY ENGINEER FOR LAND USE DATE:

_____
CITY PLANNER DATE:

SURVEYOR'S CERTIFICATION:

I, BENJAMIN M. ARAGON, NEW MEXICO PROFESSIONAL SURVEYOR No. 15268, DO HEREBY CERTIFY THAT THIS BOUNDARY SURVEY PLAT AND THE ACTUAL SURVEY ON THE GROUND UPON WHICH IT IS BASED WERE PERFORMED BY ME OR UNDER MY DIRECT SUPERVISION, THAT I AM RESPONSIBLE FOR THIS SURVEY; THAT THIS SURVEY MEETS THE MINIMUM STANDARDS FOR SURVEYING IN NEW MEXICO; AND THAT IT IS TRUE AND CORRECT TO THE BEST OF MY KNOWLEDGE AND BELIEF. I FURTHER CERTIFY THAT THIS SURVEY IS NOT A LAND DIVISION OR SUBDIVISION AS DEFINED IN THE NEW MEXICO SUBDIVISION ACT AND THAT THIS INSTRUMENT IS A BOUNDARY SURVEY PLAT OF AN EXISTING TRACT OR TRACTS.

_____
BENJAMIN M. ARAGON N.M.P.L.S. #15268

_____
DATE

BENJAMIN M. ARAGON NEW MEXICO 15268 REGISTERED PROFESSIONAL SURVEYOR

WILSON & COMPANY
4401 MASTHEAD ST. NE, SUITE 150
ALBUQUERQUE, NEW MEXICO 87109
OFFICE: 505-348-4000
FAX: 505-348-4155
www.wilsonco.com

Lot Split to create
TRACTS L-1a and L-1b
LOT LINE ADJUSTMENT PLAT OF EXISTING TRACT P-1
within Projected Section 34, T.17N., R.9E., N.M.P.M.
City of Santa Fe
Santa Fe County, New Mexico
August 2024



VICINITY MAP
N.T.S.

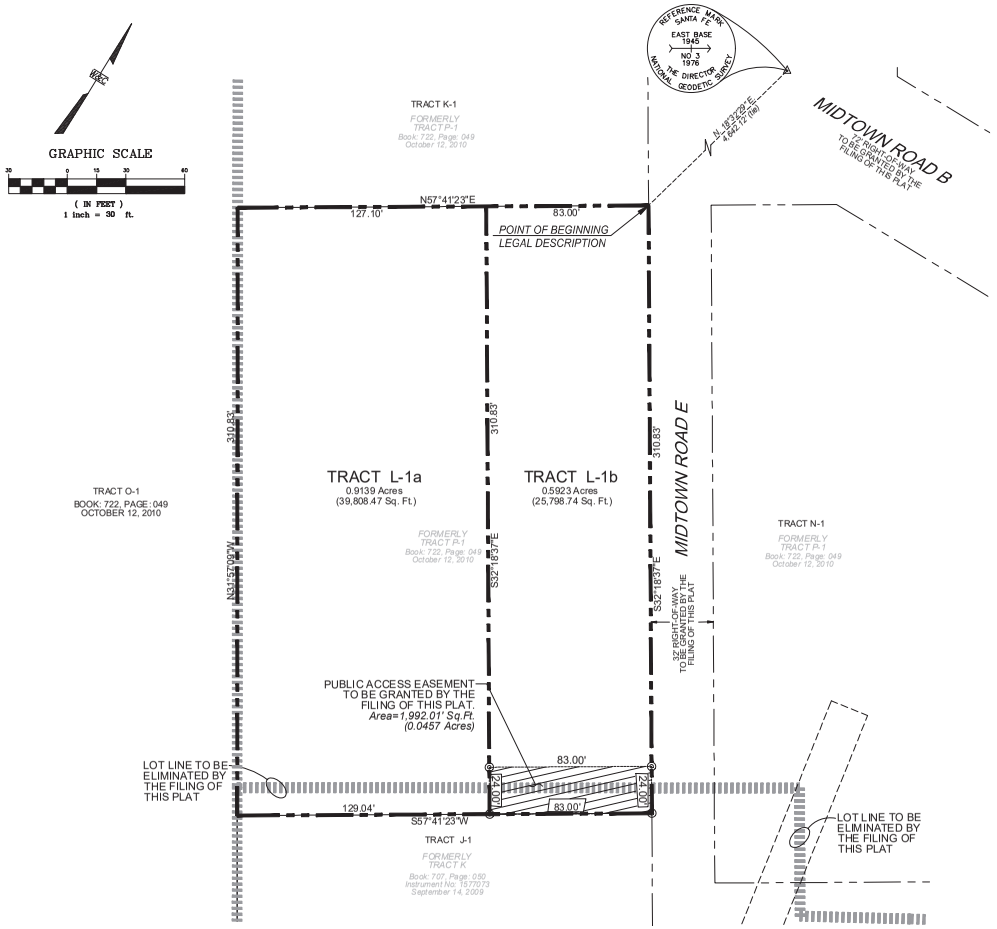

NOTES:

1. FIELD SURVEY WAS PERFORMED NOVEMBER 2021.
2. BEARINGS ARE NEW MEXICO STATE PLANE, CENTRAL ZONE. DISTANCES ARE GROUND DISTANCES. COMBINED GRID TO GROUND SCALE FACTOR: 1.0004066253 (SCALED AROUND 0,0) BASED ON A LINE FROM "SANTA FE EAST BASE RM3" TO "BM B-439, 1984", BEARING = S.49°38'22"W.
3. BENCHMARK USED FOR THIS PROJECT IS "SANTA FE EAST BASE RM3".
4. FEDERAL FLOODPLAIN MAP 35049C0411E WITH AN EFFECTIVE DATE OF DECEMBER 4, 2012 AS PUBLISHED BY THE FEDERAL EMERGENCY AGENCY SHOW THIS SITE AS BEING WITHIN ZONE X (DETERMINED TO BE OUTSIDE THE 0.2% ANNUAL CHANCE FLOODPLAIN).
5. THIS PLAT SHOWS ALL AVAILABLE RECORD OF EASEMENTS.
6. THIS PLAT SUBJECT TO RESTRICTIONS, COVENANTS AND EASEMENTS OF RECORD AS SHOWN ON PLATS REFERENCED HEREON.

REFERENCED DOCUMENTS:

THE FOLLOWING DOCUMENTS AND INSTRUMENTS WERE USED FOR THE PERFORMANCE AND PREPARATION OF THIS PLAT:

1. PLAT OF SURVEY ENTITLED, "REPLAT PREPARED FOR THE COLLEGE OF SANTA FE", recorded SEPTEMBER 14, 2006 in PLAT BOOK 707, PAGE 050-051.
2. DIVISION PLAT FOR THE COLLEGE OF SANTA FE, recorded MAY 19, 2006 in PLAT BOOK 682, PAGE 06.
3. REPLAT FOR COLLEGE OF SANTA FE, recorded JANUARY 2, 2006 in PLAT BOOK 672, PAGE 33.
4. REPLAT FOR COLLEGE OF SANTA FE, recorded SEPTEMBER 19, 2006 in PLAT BOOK 635, PAGE 46, 47.
5. REPLAT FOR COLLEGE OF SANTA FE, recorded OCTOBER 12, 2010 in PLAT BOOK 722, PAGE 049.
6. REPLAT FOR COLLEGE OF SANTA FE, recorded OCTOBER 12, 2010 in BOOK 719, PAGE 044.
7. BOUNDARY EASEMENT SURVEY PLAT FOR COLLEGE OF SANTA FE, recorded JULY 15, 2010 in BOOK 719, PAGE 047.
8. PLAT OF ALTA/ACSM LAND TITLE SURVEY, recorded OCTOBER 10, 2008 in BOOK 691, PAGE 029.
9. BOUNDARY SURVEY OF TRACT E "COLLEGE OF SANTA FE", recorded JUNE 28, 2011 in BOOK 735, PAGE 045.
10. BOUNDARY SURVEY OF TRACT E "COLLEGE OF SANTA FE", recorded OCTOBER 28, 2022 in BOOK 896, PAGE 14.
11. PLAT OF EASEMENT SURVEY FOR COLLEGE OF THE CHRISTIAN BROTHERS OF NEW MEXICO, recorded 08/17/2009.
12. REPLAT OF TRACT 3A & 3B FOR COLLEGE OF THE BOARD OF EDUCATION OF THE CITY OF SANTA FE, recorded MARCH 12, 1991 in BOOK 220, PAGE 037.
13. BOUNDARY SURVEY PLAT FOR PRESBYTERIAN MEDICAL SERVICES, recorded NOVEMBER 30, 2004 in BOOK 574, PAGE 035.
14. LOT CONSOLIDATION FOR THE STATE OF NEW MEXICO DEPARTMENT OF FINANCE & ADMINISTRATION, recorded OCTOBER 4, 1990 in BOOK 215, PAGE 013.
15. QUITCLAIM DEED from U.S.A. to COLLEGE OF THE CHRISTIAN, filed MAY 23, 1949 in BOOK 40, PAGE 437.
16. DECLARATION from U.S.A. to COLLEGE OF THE CRISTIAN, filed DECEMBER 22, 1969 in BOOK 269, PAGE 855.
17. SPECIAL WARRANTY DEED from COLLEGE OF THE CRISTIAN BROTHERS to CITY OF SANTA FE, filed SEPTEMBER 16, 2009 as INSTRUMENT 1577356.
18. EASEMENT from COLLEGE OF SANTA FE to PNM, filed JULY 9, 1990 in BOOK 682, PAGE 916.
19. EASEMENT from COLLEGE OF SANTA FE to BOARD OF EDUCATION, filed JUNE 10, 1991 in BOOK 730, PAGE 568.
20. EASEMENT from COLLEGE OF SANTA FE to FIRST COMMUNITY BANK, filed SEPTEMBER 21, 2007 as INSTRUMENT 1500540.
21. VACATION OF EASEMENT from COLLEGE OF SANTA FE to FIRST COMMUNITY BANK, filed JULY 20, 2009 as INSTRUMENT 1571651.
22. EASEMENT from COLLEGE OF SANTA FE to PNM, filed AUGUST 13, 1996 in BOOK 1299, PAGE 74.
23. EASEMENT from COLLEGE OF SANTA FE to NEW MEXICO STATE BANK , filed JUNE 12, 2009 as INSTRUMENT 1566667.
24. VACATION OF EASEMENT from COLLEGE OF SANTA FE to FIRST COMMUNITY BANK, filed AUGUST 17, 2009 as INSTRUMENT 1574183.

LEGAL DESCRIPTION:

A CERTAIN TRACT OF LAND WITHIN THE PERIMETER BEING MORE PARTICULARLY DESCRIBED AS FOLLOWS, ALL AS SHOWN ON "REPLAT PREPARED FOR COLLEGE OF SANTA FE, LOT LINE ADJUSTMENT OF EXISTING TRACT P & O, RECORDED PLAT BOOK 707, PAGES 50-50A WITHIN COLLEGE OF SANTA FE PROPERTY PROJECTED SECTION 34, T 17N, R9E, NMPM, CITY AND COUNTY OF SANTA FE, NEW MEXICO." RECORDED ON OCTOBER 12, 2010 IN BOOK 722 IN PAGE 049, AS INSTRUMENT NO. 1613544, RECORDS OF SANTA FE COUNTY, NEW MEXICO:

BEGINNING AT THE MOST NORTHERLY CORNER OF SAID PERIMETER FROM WHENCE A BRASS CAP STAMPED "EAST BASE 1945, NO 3 1976" A SANTA FE REFERENCE MARK, BEARS **N. 18°32'29" E.**, A DISTANCE OF **4,642.12** FEET; THENCE, FROM SAID POINT OF BEGINNING,

S. 32°18'37" E., A DISTANCE OF **310.83** FEET TO AN ANGLE POINT; THENCE,

S. 57°41'23" W., A DISTANCE OF **212.04** FEET TO AN ANGLE POINT; THENCE,

N. 31°57'09" W., A DISTANCE OF **310.83** FEET TO AN ANGLE POINT; THENCE,

N. 57°41'23" E., A DISTANCE OF **210.10** FEET TO THE POINT OF BEGINNING AND CONTAINING AN AREA OF **1.5061** ACRES, MORE OR LESS (**65,607.21** SQ. FT., MORE OR LESS)

LEGEND:

- ◆ FOUND: REBAR w/CAP (DESCRIPTION, AS NOTED)
- NEW LOT LINE
- LOT LINE TO BE ELIMINATED
- EASEMENT LINE (AS NOTED)

COUNTY OF SANTA FE }SS
STATE OF NEW MEXICO

I hereby certify that this instrument was filed for record on the _____ day of _____, 20_____ A.D. at _____ o'clock _____, and was duly recorded in book _____ page(s) _____ of the records of Santa Fe County.

Witness my Hand and Seal of office
KATHARINE E. CLARK
County Clerk, Santa Fe county, N.M.

_____
Deputy

County Clerk
Seal

STATEMENT OF DECLARATION:

THE PURPOSE OF THIS PLAT IS TO:

REPLAT TRACT L-1, BY LOT LINE ADJUSTMENT AND/OR LOT SPLIT FROM THE ORIGINAL CONFIGURATION & TO DEDICATE RIGHT-OF-WAY, AS SHOWN HEREON.

AFFIDAVIT:

KNOW ALL MEN BY THESE PRESENTS THAT THE UNDERSIGNED OWNER HAS CAUSED TO BE REPLATTED THOSE LANDS SHOWN HEREON. THE SAID REPLAT IS MADE WITH THE FREE CONSENT AND IN ACCORDANCE WITH THE DESIRES OF THE SAID OWNER. THIS REPLAT CONTAINS 4.88 ACRES, MORE OR LESS. ALL TRACTS SHOWN HEREON ARE SUBJECT TO RECIPROCAL PRIVATE ACCESS AND PARKING EASEMENTS ALONG AND OVER EXISTING DRIVEWAYS AND PARKING AREAS. EASEMENTS ARE GRANTED FOR EXISTING UTILITIES. THERE IS NO ROAD DEDICATION.
THIS REPLAT LIES WITHIN THE PLANNING AND PLATTING JURISDICTION OF THE CITY OF SANTA FE, N.M.

OWNER: _____

_____
BY: ALAN WEBBER, MAYOR DATE:

_____
CITY CLERK: DATE:

STATE OF NEW MEXICO
COUNTY OF SANTA FE
THE FOREGOING INSTRUMENT WAS SWORN, AOKNOWLEDGED AND SUBSCRIBED BEFORE ME ON THIS _____ DAY OF _____, 20____.

_____
NOTARY PUBLIC MY COMMISSION EXPIRES

REVIEWED BY COUNTY OF SANTA FE:

_____
COUNTY TREASURER DATE:

REVIEWED BY CITY OF SANTA FE:

_____
CITY ENGINEER FOR LAND USE DATE:

_____
CITY PLANNER DATE:

SURVEYOR'S CERTIFICATION:

I, BENJAMIN M. ARAGON, NEW MEXICO PROFESSIONAL SURVEYOR No. 15268, DO HEREBY CERTIFY THAT THIS BOUNDARY SURVEY PLAT AND THE ACTUAL SURVEY ON THE GROUND UPON WHICH IT IS BASED WERE PERFORMED BY ME OR UNDER MY DIRECT SUPERVISION, THAT I AM RESPONSIBLE FOR THIS SURVEY; THAT THIS SURVEY MEETS THE MINIMUM STANDARDS FOR SURVEYING IN NEW MEXICO; AND THAT IT IS TRUE AND CORRECT TO THE BEST OF MY KNOWLEDGE AND BELIEF. I FURTHER CERTIFY THAT THIS SURVEY IS NOT A LAND DIVISION OR SUBDIVISION AS DEFINED IN THE NEW MEXICO SUBDIVISION ACT AND THAT THIS INSTRUMENT IS A BOUNDARY SURVEY PLAT OF AN EXISTING TRACT OR TRACTS.

_____
BENJAMIN M. ARAGON N.M.P.L.S. #15268

_____
DATE

BENJAMIN M. ARAGON NEW MEXICO 15268 REGISTERED PROFESSIONAL SURVEYOR

WILSON & COMPANY
4401 MASTHEAD ST. NE, SUITE 150
ALBUQUERQUE, NEW MEXICO 87109
OFFICE: 505-348-4000
FAX: 505-348-4155
www.wilsonco.com

m:\SGR\21-306--19-Disciplines\Survey\Drawings__PLATTING\TRACT L-1\TRACTS L-1a AND L-1b\Lot Split for TRACT L-1a and L-1b.dwg

Lot Split to create
TRACTS I-1a and I-1b

LOT LINE ADJUSTMENT PLAT OF EXISTING
TRACT G, H and TRACT I
within Projected Section 34, T.17N., R.9E., N.M.P.M.
City of Santa Fe
Santa Fe County, New Mexico
August 2024

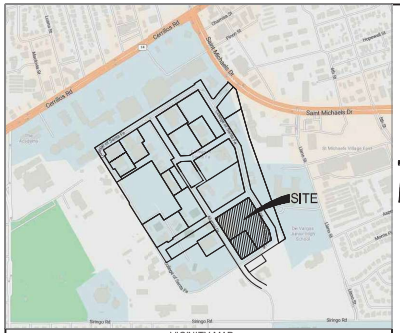

VICINITY MAP
N.T.S.

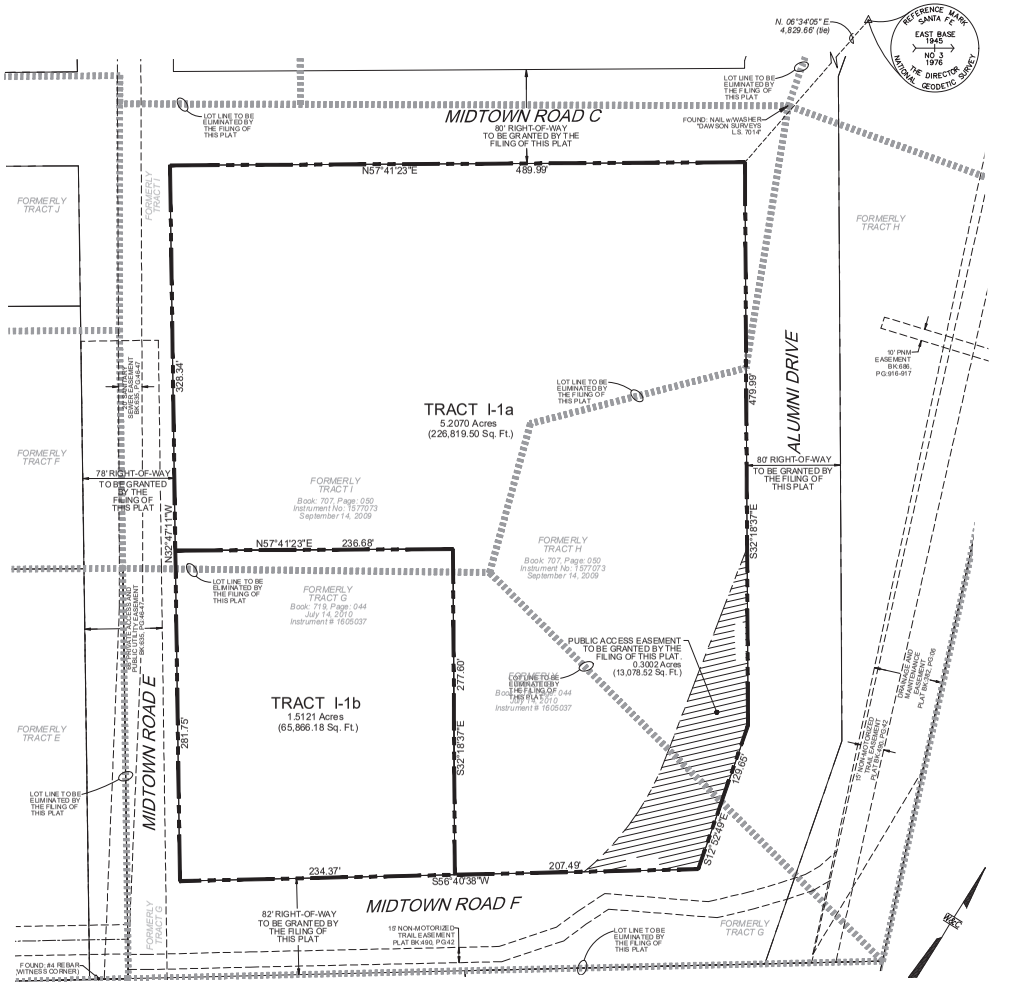

NOTES:

1. FIELD SURVEY WAS PERFORMED NOVEMBER 2021.
2. BEARINGS ARE NEW MEXICO STATE PLANE, CENTRAL ZONE. DISTANCES ARE GROUND DISTANCES. COMBINED GRID TO GROUND SCALE FACTOR: 1.0004066253 (SCALED AROUND 0,0) BASED ON A LINE FROM "SANTA FE EAST BASE RM3" TO "BM B-439, 1984", BEARING = S.49°38'22"W.
3. BENCHMARK USED FOR THIS PROJECT IS "SANTA FE EAST BASE RM3".
4. FEDERAL FLOODPLAIN MAP 35049C0411E WITH AN EFFECTIVE DATE OF DECEMBER 4, 2012 AS PUBLISHED BY THE FEDERAL EMERGENCY AGENCY SHOW THIS SITE AS BEING WITHIN ZONE X (DETERMINED TO BE OUTSIDE THE 0.2% ANNUAL CHANCE FLOODPLAIN).
5. THIS PLAT SHOWS ALL AVAILABLE RECORD OF EASEMENTS.
6. THIS PLAT SUBJECT TO RESTRICTIONS, COVENANTS AND EASEMENTS OF RECORD AS SHOWN ON PLATS REFERENCED HEREON.

REFERENCED DOCUMENTS:

THE FOLLOWING DOCUMENTS AND INSTRUMENTS WERE USED FOR THE PERFORMANCE AND PREPARATION OF THIS PLAT:

1. PLAT OF SURVEY ENTITLED, "REPLAT PREPARED FOR THE COLLEGE OF SANTA FE", recorded SEPTEMBER 14, 2006 in PLAT BOOK 707, PAGE 050-051.
2. DIVISION PLAT FOR THE COLLEGE OF SANTA FE, recorded MAY 19, 2006 in PLAT BOOK 682, PAGE 06.
3. REPLAT FOR COLLEGE OF SANTA FE, recorded JANUARY 2, 2006 in PLAT BOOK 672, PAGE 33.
4. REPLAT FOR COLLEGE OF SANTA FE, recorded SEPTEMBER 19, 2006 in PLAT BOOK 635, PAGE 46, 47.
5. REPLAT FOR COLLEGE OF SANTA FE, recorded OCTOBER 12, 2010 in PLAT BOOK 722, PAGE 049.
6. REPLAT FOR COLLEGE OF SANTA FE, recorded OCTOBER 12, 2010 in BOOK 719, PAGE 044.
7. BOUNDARY EASEMENT SURVEY PLAT FOR COLLEGE OF SANTA FE, recorded JULY 15, 2010 in BOOK 719, PAGE 047.
8. PLAT OF ALTA/ACSM LAND TITLE SURVEY, recorded OCTOBER 10, 2008 in BOOK 691, PAGE 029.
9. BOUNDARY SURVEY OF TRACT E "COLLEGE OF SANTA FE", recorded JUNE 28, 2011 in BOOK 735, PAGE 045.
10. BOUNDARY SURVEY OF TRACT E "COLLEGE OF SANTA FE", recorded OCTOBER 28, 2022 in BOOK 896, PAGE 14.
11. PLAT OF EASEMENT SURVEY FOR COLLEGE OF THE CHRISTIAN BROTHERS OF NEW MEXICO, recorded 08/17/2009.
12. REPLAT OF TRACT 3A & 3B FOR COLLEGE OF THE BOARD OF EDUCATION OF THE CITY OF SANTA FE, recorded MARCH 12, 1991 in BOOK 220, PAGE 037.
13. BOUNDARY SURVEY PLAT FOR PRESBYTERIAN MEDICAL SERVICES, recorded NOVEMBER 30, 2004 in BOOK 574, PAGE 035.
14. LOT CONSOLIDATION FOR THE STATE OF NEW MEXICO DEPARTMENT OF FINANCE & ADMINISTRATION, recorded OCTOBER 4, 1990 in BOOK 215, PAGE 013.
15. QUITCLAIM DEED from U.S.A. to COLLEGE OF THE CHRISTIAN, filed MAY 23, 1949 in BOOK 40, PAGE 437.
16. DECLARATION from U.S.A. to COLLEGE OF THE CRISTIAN, filed DECEMBER 22, 1969 in BOOK 269, PAGE 855.
17. SPECIAL WARRANTY DEED from COLLEGE OF THE CRISTIAN BROTHERS to CITY OF SANTA FE, filed SEPTEMBER 16, 2009 as INSTRUMENT 1577356.
18. EASEMENT from COLLEGE OF SANTA FE to PNM, filed JULY 9, 1990 in BOOK 682, PAGE 916.
19. EASEMENT from COLLEGE OF SANTA FE to BOARD OF EDUCATION, filed JUNE 10, 1991 in BOOK 730, PAGE 568.
20. EASEMENT from COLLEGE OF SANTA FE to FIRST COMMUNITY BANK, filed SEPTEMBER 21, 2007 as INSTRUMENT 1500540.
21. VACATION OF EASEMENT from COLLEGE OF SANTA FE to FIRST COMMUNITY BANK, filed JULY 20, 2009 as INSTRUMENT 1571651.
22. EASEMENT from COLLEGE OF SANTA FE to PNM, filed AUGUST 13, 1996 in BOOK 1299, PAGE 74.
23. EASEMENT from COLLEGE OF SANTA FE to NEW MEXICO STATE BANK , filed JUNE 12, 2009 as INSTRUMENT 1566667.
24. VACATION OF EASEMENT from COLLEGE OF SANTA FE to FIRST COMMUNITY BANK, filed AUGUST 17, 2009 as INSTRUMENT 1574183.

LEGAL DESCRIPTION:

A CERTAIN TRACT OF LAND WITHIN THE PERIMETER BEING MORE PARTICULARLY DESCRIBED AS FOLLOWS, ALL AS SHOWN ON "BOUNDARY SURVEY PLAT PREPARED FOR THE COLLEGE OF SANTA FE WITHIN COLLEGE OF SANTA FE PROPERTY PROJECTED SECTION 34, T17N, R9E, NMPM. CITY AND COUNTY OF SANTA FE, NEW MEXICO". RECORDED ON SEPTEMBER 14, 2009 IN BOOK 707 IN PAGE 50, AS INSTRUMENT NO. 1577073, RECORDS OF SANTA FE COUNTY, NEW MEXICO:

BEGINNING AT THE MOST NORTHERLY CORNER OF SAID PERIMETER FROM WHENCE A BRASS CAP STAMPED "EAST BASE 1945, NO 3 1976" A SANTA FE REFERENCE MARK, BEARS **N. 06°34'05" E.**, A DISTANCE OF **4,829.66** FEET; THENCE, FROM SAID POINT OF BEGINNING,

S. 32°18'37" E., A DISTANCE OF **479.99** FEET TO AN ANGLE POINT; THENCE,

S. 12°52'49" E., A DISTANCE OF **129.65** FEET TO AN ANGLE POINT; THENCE,

S. 56°40'38" W., A DISTANCE OF **441.86** FEET TO AN ANGLE POINT; THENCE,

N. 32°47'11" W., A DISTANCE OF **610.09** FEET TO AN ANGLE POINT; THENCE,

N. 57°41'23" E., A DISTANCE OF **489.99** FEET TO THE POINT OF BEGINNING AND CONTAINING AN AREA OF **6.7191** ACRES , MORE OR LESS (**292,685.68** SQ. FT., MORE OR LESS)

LEGEND:

- ⋄ FOUND: REBAR w/CAP (DESCRIPTION, AS NOTED)
- NEW LOT LINE
- LOT LINE TO BE ELIMINATED
- EASEMENT LINE (AS NOTED)

STATEMENT OF DECLARATION:

THE PURPOSE OF THIS PLAT IS TO:

REPLAT TRACT I-1a AND I-1b, BY LOT LINE ADJUSTMENT AND/OR LOT SPLIT FROM THE ORIGINAL CONFIGURATION & TO DEDICATE RIGHT-OF-WAY, AS SHOWN HEREON.

AFFIDAVIT:

KNOW ALL MEN BY THESE PRESENTS THAT THE UNDERSIGNED OWNER HAS CAUSED TO BE REPLATTED THOSE LANDS SHOWN HEREON. THE SAID REPLAT IS MADE WITH THE FREE CONSENT AND IN ACCORDANCE WITH THE DESIRES OF THE SAID OWNER. THIS REPLAT CONTAINS 4.88 ACRES, MORE OR LESS. ALL TRACTS SHOWN HEREON ARE SUBJECT TO RECIPROCAL PRIVATE ACCESS AND PARKING EASEMENTS ALONG AND OVER EXISTING DRIVEWAYS AND PARKING AREAS. EASEMENTS ARE GRANTED FOR EXISTING UTILITIES. THERE IS NO ROAD DEDICATION.
THIS REPLAT LIES WITHIN THE PLANNING AND PLATTING JURISDICTION OF THE CITY OF SANTA FE, N.M.

OWNER: _____

BY: ALAN WEBBER, MAYOR DATE:

CITY CLERK: DATE:

STATE OF NEW MEXICO
COUNTY OF SANTA FE
THE FOREGOING INSTRUMENT WAS SWORN, ACKNOWLEDGED AND SUBSCRIBED BEFORE ME ON THIS _____ DAY OF _____, 20____.

NOTARY PUBLIC MY COMMISSION EXPIRES

REVIEWED BY COUNTY OF SANTA FE:

COUNTY TREASURER DATE:

REVIEWED BY CITY OF SANTA FE:

CITY ENGINEER FOR LAND USE DATE:

CITY PLANNER DATE:

SURVEYOR'S CERTIFICATION:

I, BENJAMIN M. ARAGON, NEW MEXICO PROFESSIONAL SURVEYOR No. 15268, DO HEREBY CERTIFY THAT THIS BOUNDARY SURVEY PLAT AND THE ACTUAL SURVEY ON THE GROUND UPON WHICH IT IS BASED WERE PERFORMED BY ME OR UNDER MY DIRECT SUPERVISION; THAT I AM RESPONSIBLE FOR THIS SURVEY; THAT THIS SURVEY MEETS THE MINIMUM STANDARDS FOR SURVEYING IN NEW MEXICO; AND THAT IT IS TRUE AND CORRECT TO THE BEST OF MY KNOWLEDGE AND BELIEF. I FURTHER CERTIFY THAT THIS SURVEY IS NOT A LAND DIVISION OR SUBDIVISION AS DEFINED IN THE NEW MEXICO SUBDIVISION ACT AND THAT THIS INSTRUMENT IS A BOUNDARY SURVEY PLAT OF AN EXISTING TRACT OR TRACTS.

BENJAMIN M. ARAGON N.M.P.L.S. #15268

DATE

WILSON & COMPANY
4401 MASTHEAD ST. NE, SUITE 150
ALBUQUERQUE, NEW MEXICO 87109
OFFICE: 505-348-4000
FAX: 505-348-4155
www.wilsonco.com

SHEET 1 OF 1

COUNTY OF SANTA FE
STATE OF NEW MEXICO } SS

I hereby certify that this instrument was filed for record on the_____day of _____, 20_____A.D. at _____ o'block _____, and was duly recorded in book _____ page(s)_____ of the records of Santa Fe County.

Witness my Hand and Seal of office
KATHARINE E. CLARK
County Clerk, Santa Fe county, N.M.

Deputy

County Clerk

Seal

m:\2021-006-19\4-006_Disciplines\Survey\Drawings_PLATTING\TRACT I-1\TRACTS I-1a AND I-1b\Lot Split for TRACT I-1a AND I-1b.dwg

Lot Split and Lot Line Adjustment to create TRACT G-1

LOT LINE ADJUSTMENT PLAT OF EXISTING TRACT G
within Projected Section 34, T.17N., R.9E., N.M.P.M.
City of Santa Fe
Santa Fe County, New Mexico
June 2024

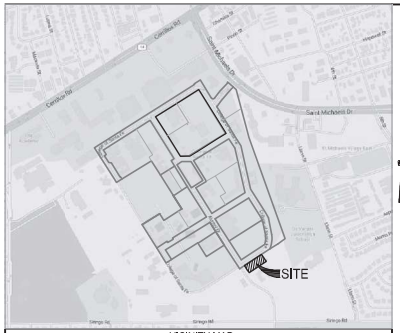

VICINITY MAP
N.T.S.

NOTES:

1. FIELD SURVEY WAS PERFORMED NOVEMBER 2021.
2. BEARINGS ARE NEW MEXICO STATE PLANE, CENTRAL ZONE. DISTANCES ARE GROUND DISTANCES. COMBINED GRID TO GROUND SCALE FACTOR: 1.0004066253 (SCALED AROUND 0,0) BASED ON A LINE FROM "SANTA FE EAST BASE RM3" TO "BM B-439, 1984", BEARING = S.49°38'22"W.
3. BENCHMARK USED FOR THIS PROJECT IS "SANTA FE EAST BASE RM3".
4. FEDERAL FLOODPLAIN MAP 35049C0411E WITH AN EFFECTIVE DATE OF DECEMBER 4, 2012 AS PUBLISHED BY THE FEDERAL EMERGENCY AGENCY SHOW THIS SITE AS BEING WITHIN ZONE X (DETERMINED TO BE OUTSIDE THE 0.2% ANNUAL CHANCE FLOODPLAIN).
5. THIS PLAT SHOWS ALL AVAILABLE RECORD OF EASEMENTS.
6. THIS PLAT SUBJECT TO RESTRICTIONS, COVENANTS AND EASEMENTS OF RECORD AS SHOWN ON PLATS REFERENCED HEREON.

REFERENCED DOCUMENTS:

THE FOLLOWING DOCUMENTS AND INSTRUMENTS WERE USED FOR THE PERFORMANCE AND PREPARATION OF THIS PLAT:

1. PLAT OF SURVEY ENTITLED, "REPLAT PREPARED FOR THE COLLEGE OF SANTA FE", recorded SEPTEMBER 14, 2006 in PLAT BOOK 707, PAGE 050-051.
2. DIVISION PLAT FOR THE COLLEGE OF SANTA FE, recorded MAY 19, 2006 in PLAT BOOK 682, PAGE 06.
3. REPLAT FOR COLLEGE OF SANTA FE, recorded JANUARY 2, 2006 in PLAT BOOK 672, PAGE 33.
4. REPLAT FOR COLLEGE OF SANTA FE, recorded SEPTEMBER 19, 2006 in PLAT BOOK 635, PAGE 46, 47.
5. REPLAT FOR COLLEGE OF SANTA FE, recorded OCTOBER 12, 2010 in PLAT BOOK 722, PAGE 049.
6. REPLAT FOR COLLEGE OF SANTA FE, recorded OCTOBER 12, 2010 in BOOK 719, PAGE 044.
7. BOUNDARY EASEMENT SURVEY PLAT FOR COLLEGE OF SANTA FE, recorded JULY 15, 2010 in BOOK 719, PAGE 047.
8. PLAT OF ALTA/ACSM LAND TITLE SURVEY, recorded OCTOBER 10, 2008 in BOOK 691, PAGE 029.
9. BOUNDARY SURVEY OF TRACT E "COLLEGE OF SANTA FE", recorded JUNE 28, 2011 in BOOK 735, PAGE 045.
10. BOUNDARY SURVEY OF TRACT E "COLLEGE OF SANTA FE", recorded OCTOBER 28, 2022 in BOOK 896, PAGE 14.
11. PLAT OF EASEMENT SURVEY FOR COLLEGE OF THE CHRISTIAN BROTHERS OF NEW MEXICO, recorded 08/17/ 2009.
12. REPLAT OF TRACT 3A & 3B FOR COLLEGE OF THE BOARD OF EDUCATION OF THE CITY OF SANTA FE, recorded MARCH 12, 1991 in BOOK 220, PAGE 037.
13. BOUNDARY SURVEY PLAT FOR PRESBYTERIAN MEDICAL SERVICES, recorded NOVEMBER 30, 2004 in BOOK 574, PAGE 035.
14. LOT CONSOLIDATION FOR THE STATE OF NEW MEXICO DEPARTMENT OF FINANCE & ADMINISTRATION, recorded OCTOBER 4, 1990 in BOOK 215, PAGE 013.
15. QUITCLAIM DEED from U.S.A. to COLLEGE OF THE CHRISTIAN, filed MAY 23, 1949 in BOOK 40, PAGE 437.
16. DECLARATION from U.S.A. to COLLEGE OF THE CRISTIAN, filed DECEMBER 22, 1969 in BOOK 269, PAGE 855.
17. SPECIAL WARRANTY DEED from COLLEGE OF THE CRISTIAN BROTHERS to CITY OF SANTA FE, filed SEPTEMBER 16, 2009 as INSTRUMENT 1577356.
18. EASEMENT from COLLEGE OF SANTA FE to PNM, filed JULY 9, 1990 in BOOK 682, PAGE 916.
19. EASEMENT from COLLEGE OF SANTA FE to BOARD OF EDUCATION, filed JUNE 10, 1991 in BOOK 730, PAGE 568.
20. EASEMENT from COLLEGE OF SANTA FE to FIRST COMMUNITY BANK, filed SEPTEMBER 21, 2007 as INSTRUMENT 1500540.
21. VACATION OF EASEMENT from COLLEGE OF SANTA FE to FIRST COMMUNITY BANK, filed JULY 20, 2009 as INSTRUMENT 1571651.
22. EASEMENT from COLLEGE OF SANTA FE to PNM, filed AUGUST 13, 1996 in BOOK 1299, PAGE 74.
23. EASEMENT from COLLEGE OF SANTA FE to NEW MEXICO STATE BANK , filed JUNE 12, 2009 as INSTRUMENT 1566667.
24. VACATION OF EASEMENT from COLLEGE OF SANTA FE to FIRST COMMUNITY BANK, filed AUGUST 17, 2009 as INSTRUMENT 1574183.

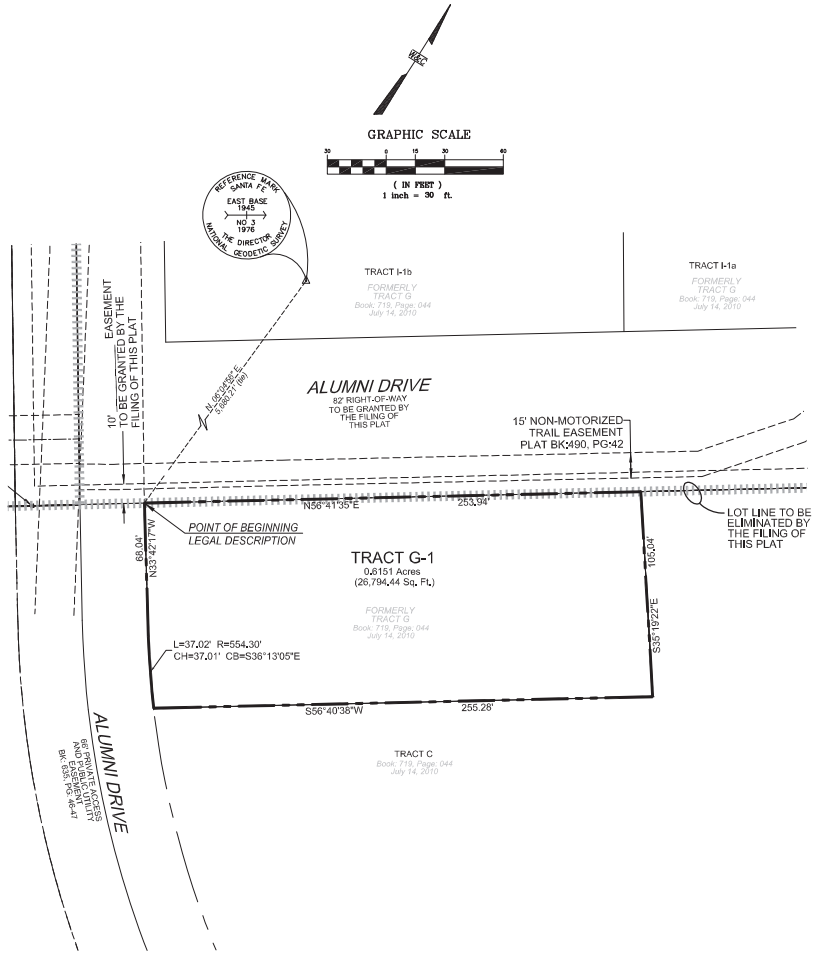

LEGAL DESCRIPTION:

A CERTAIN TRACT OF LAND WITHIN THE PERIMETER BEING MORE PARTICULARLY DESCRIBED AS FOLLOWS, ALL AS SHOWN ON "REPLAT PREPARED FOR COLLEGE OF SANTA FE, LOT LINE ADJUSTMENT OF EXISTING TRACT C & G, RECORDED PLAT BOOK 707, PAGES 50-50A WITHIN COLLEGE OF SANTA FE PROPERTY PROJECTED SECTION 34, T17N, R9E, NMPM, CITY AND COUNTY OF SANTA FE, NEW MEXICO." RECORDED ON JULY 14, 2010 IN BOOK 719 IN PAGE 044, AS INSTRUMENT NO. 1605037, RECORDS OF SANTA FE COUNTY, NEW MEXICO:

BEGINNING AT THE MOST NORTHERLY CORNER OF SAID PERIMETER FROM WHENCE A BRASS CAP STAMPED "EAST BASE 1945, NO 3 1976" A SANTA FE REFERENCE MARK, BEARS **N. 06°04'56" E.**, A DISTANCE OF **5,680.21** FEET; THENCE, FROM SAID POINT OF BEGINNING,

N. 56°41'35" E., A DISTANCE OF **253.94** FEET TO AN ANGLE POINT; THENCE,

S. 35°19'22" E., A DISTANCE OF **105.04** FEET TO AN ANGLE POINT; THENCE,

S. 56°40'38" W., A DISTANCE OF **255.28** FEET TO A CURVE; THENCE,

37.02 FEET ALONG A CURVE TO THE RIGHT HAVING A RADIUS OF **554.30** FEET, DELTA OF **3°49'35"**, CHORD BEARING AND DISTANCE OF **N. 36°13'05" E., 37.01'** FEET TO A POINT; THENCE,

N. 33°42'17" W., A DISTANCE OF **68.04** FEET TO THE POINT OF BEGINNING AND CONTAINING AN AREA OF **0.6151** ACRES, MORE OR LESS (**26,794.44** SQ. FT., MORE OR LESS)

LEGEND:

- ◦ FOUND: REBAR w/CAP (DESCRIPTION, AS NOTED)
- NEW LOT LINE
- LOT LINE TO BE ELIMINATED
- EASEMENT LINE (AS NOTED)

COUNTY OF SANTA FE } SS
STATE OF NEW MEXICO

I hereby certify that this instrument was filed for record on the _____ day of _____, 20_____ A.D. at _____ o'clock _____, and was duly recorded in book _____ page(s) _____ of the records of Santa Fe County.

Witness my Hand and Seal of office
KATHARINE E. CLARK
County Clerk, Santa Fe county, N.M.

_____
Deputy

County Clerk

Seal

STATEMENT OF DECLARATION:

THE PURPOSE OF THIS PLAT IS TO:

REPLAT TRACT G-1, BY LOT LINE ADJUSTMENT AND/OR LOT SPLIT FROM THE ORIGINAL CONFIGURATION & TO DEDICATE RIGHT-OF-WAY, AS SHOWN HEREON.

AFFIDAVIT:

KNOW ALL MEN BY THESE PRESENTS THAT THE UNDERSIGNED OWNER HAS CAUSED TO BE REPLATTED THOSE LANDS SHOWN HEREON, THE SAID REPLAT IS MADE WITH THE FREE CONSENT AND IN ACCORDANCE WITH THE DESIRES OF THE SAID OWNER, THIS REPLAT CONTAINS 4.88 ACRES, MORE OR LESS. ALL TRACTS SHOWN HEREON ARE SUBJECT TO RECIPROCAL, PRIVATE ACCESS AND PARKING EASEMENTS ALONG AND OVER EXISTING DRIVEWAYS AND PARKING AREAS. EASEMENTS ARE GRANTED FOR EXISTING UTILITIES. THERE IS NO ROAD DEDICATION.
THIS REPLAT LIES WITHIN THE PLANNING AND PLATTING JURISDICTION OF THE CITY OF SANTA FE, N.M.

OWNER: _____

BY: ALAN WEBBER, MAYOR DATE: _____

CITY CLERK: DATE: _____

STATE OF NEW MEXICO
COUNTY OF SANTA FE
THE FOREGOING INSTRUMENT WAS SWORN, ACKNOWLEDGED AND SUBSCRIBED BEFORE ME ON THIS _____ DAY OF _____, 20____.

NOTARY PUBLIC MY COMMISSION EXPIRES

REVIEWED BY COUNTY OF SANTA FE:

COUNTY TREASURER DATE: _____

REVIEWED BY CITY OF SANTA FE:

CITY ENGINEER FOR LAND USE DATE: _____

CITY PLANNER DATE: _____

SURVEYOR'S CERTIFICATION:

I, BENJAMIN M. ARAGON, NEW MEXICO PROFESSIONAL SURVEYOR No. 15268, DO HEREBY CERTIFY THAT THIS BOUNDARY SURVEY PLAT AND THE ACTUAL SURVEY ON THE GROUND UPON WHICH IT IS BASED WERE PERFORMED BY ME OR UNDER MY DIRECT SUPERVISION; THAT I AM RESPONSIBLE FOR THIS SURVEY; THAT THIS SURVEY MEETS THE MINIMUM STANDARDS FOR SURVEYING IN NEW MEXICO; AND THAT IT IS TRUE AND CORRECT TO THE BEST OF MY KNOWLEDGE AND BELIEF. I FURTHER CERTIFY THAT THIS SURVEY IS NOT A LAND DIVISION OR SUBDIVISION AS DEFINED IN THE NEW MEXICO SUBDIVISION ACT AND THAT THIS INSTRUMENT IS A BOUNDARY SURVEY PLAT OF AN EXISTING TRACT OR TRACTS.

BENJAMIN M. ARAGON N.M.P.L.S. #15268

DATE

BENJAMIN M. ARAGON NEW MEXICO 15268 REGISTERED PROFESSIONAL SURVEYOR

WILSON & COMPANY
4401 MASTHEAD ST. NE, SUITE 150
ALBUQUERQUE, NEW MEXICO 87109
OFFICE: 505-348-4000
FAX: 505-348-4155
www.wilsonco.com

SHEET 1 OF 1

EXHIBIT B-2

LEGAL DESCRIPTION OF THE PROPERTY

[To be attached upon recording of subdivision plat]

EXHIBIT C

FORM OF LEASE AGREEMENT

[attached]

Recording Requested By,
And When Recorded Return To:

CITY OF SANTA FE
200 LINCOLN AVENUE
SANTA FE, NM 87501
ATTN: ERIN MCSHERRY, CITY ATTORNEY

LEASE AGREEMENT BETWEEN
THE CITY OF SANTA FE AND ASPECT QOZB, LLC

THIS LEASE AGREEMENT (this "**Lease**") is made and executed as of the _____ day of _____ 20__, between the CITY OF SANTA FE, a municipal corporation and political subdivision of the State of New Mexico (the "**City**"), and ASPECT QOZB, LLC, a Delaware limited liability company ("**Developer**"), effective as of the Lease Commencement Date (defined below). The City and Developer are sometimes referred to herein individually as a "**Party**" and together as the "**Parties**."

Recitals

A. The City owns the real property and improvements consisting of approximately 60 acres generally located within the block defined by Cerrillos Road, St. Michaels Drive, Llano Street, Siringo Road, and Camino Carlos Rey in the City of Santa Fe, County of Santa Fe, State of New Mexico, as generally depicted on Exhibit A attached hereto (the "**Midtown Site**").

B. By Resolution No. 2022-68, approved on November 30, 2022, the governing body of the City (the "**Governing Body**") adopted the Midtown Master Plan (the "**Master Plan**"), which, together with the Midtown Community Development Plan adopted on January 25, 2023 by Resolution No. 2023-5 (the "**Community Development Plan**"), sets forth the City's vision for development of the Midtown Site and establishes certain form-based zoning standards and certain other standards and policies for the future redevelopment of the Midtown Site as a sustainable, pedestrian-friendly, mixed-use neighborhood that provides employment and housing opportunities, improved mobility options, and access to recreation, public spaces, and cultural venues.

C. On August 9, 2023, the Governing Body, by Ordinance No. 2023-21, revised the City of Santa Fe metropolitan redevelopment code (the "**City Redevelopment Code**"), under which the Governing Body updated its ordinance establishing a metropolitan redevelopment agency (the "**MRA**"), comprised of the commission of the MRA, director of the MRA ("**MRA Director**"), and staff, as the official body for making advisory recommendations to the Governing Body, at such time as an area is designated by the Governing Body with respect thereto, and for taking certain actions delegated to the MRA pursuant to the City Redevelopment Code. In the absence of a MRA Director, the City Manager or the City Manager's designee will act for the MRA Director hereunder.

D. The City released a Request for Proposals on December 1, 2022 (the "**Studio RFP**"), for the redevelopment and operation of the portion of the Midtown Site to, among other

things, expand the existing film production studio facilities with the addition of more state-of-the art sound stages, pre- and post-production offices and work facilities to meet the needs of the industry and support film and multi-media production in the City, all as more specifically set forth in the Studio RFP. The City will subdivide the Property (defined below) into parcels as set forth in Section 2.1 below.

E. Midtown Santa Fe Productions QOF, LLC, a Delaware limited liability company, affiliated with Developer ("**QOF**"), submitted the only response to the Studio RFP on March 2, 2023, to redevelop the Property consistent with the Studio RFP (the "**Proposed Project**"). QOF proposed combining the Proposed Project with the adjacent Midtown Santa Fe Production Studio, formerly the Shellaberger Tennis Center, and envisions that the combined projects will become the largest studio in northern New Mexico, featuring multi-family housing, six soundstages and nearly 180,000 square feet of production and support space across five different buildings.

F. Pursuant to the Studio RFP, the City established an Evaluation Committee to review and evaluate the response based on the factors set forth in the Studio RFP, following which the Evaluation Committee determined that QOF had the experience, qualifications, and capacity to implement the scope of work and achieve the vision and goals articulated in the Studio RFP.

G. The City and QOF entered into the Exclusive Negotiation Agreement approved by the Governing Body on July 26, 2023 (as extended, the "**ENA**"), for the redevelopment of the Proposed Project consistent with the Studio RFP. The ENA included, among other things, that the City and QOF would negotiate and enter into a disposition and development agreement setting forth the scope of the Proposed Project and the requirements and conditions for the design, development, operation and disposition of the completed Proposed Project.

H. Concurrent with the execution of this Lease, the City and Developer are entering into a Development and Disposition Agreement (the "**DDA**"), the purpose of which is to set forth the scope of the Project (as defined in the DDA) and the requirements and conditions for the design, development, operation and disposition of the completed Project.

I. The purpose of this Lease is to lease to Developer for the Term (defined below) the Property (or portion thereof) for Developer to perform its obligations set forth in the DDA, until such time as the City coveys the Property (or portion thereof) to Developer pursuant to the terms of the DDA.

J. The City is authorized, pursuant to the Santa Fe City Code of 1987, as amended from time to time (the "**City Code**") to enter into binding leases to carry out the plan for the development of the Property.

AGREEMENT

NOW THEREFORE, for and in consideration of the mutual promises, covenants and conditions contained herein, the receipt and sufficiency of which are hereby acknowledged, the

City, as landlord, and Developer, as tenant, hereby agree that the foregoing recitals are true and correct and incorporated herein and as follows:

ARTICLE 1
DEMISE AND DESCRIPTION OF PROPERTY

1.1 The City leases to Developer and Developer leases from City upon the terms and conditions contained herein, approximately 11 acres of land, together with the buildings known as Benildus Hall, Onate Hall, Driscoll Fitness Center and Garson Studios (collectively, the "**Buildings**"), and all other existing accessory structures and improvements located thereon, and rights of egress across adjacent roadways (collectively, the "**Property**"), located within in the Midtown Site and generally depicted on Exhibit B.

1.2 As of the Lease Commencement Date, pursuant to Section 2.4 of the DDA, the City conveyed to Developer all furniture, fixtures and equipment located within or affixed to any Building at the Property.

ARTICLE 2
COMMENCEMENT AND TERM.

2.1 This Lease shall become effective on the date that is 45 days after the Governing Body adopts an ordinance approving the DDA (the "**Lease Commencement Date**"); provided, however, if a referendum election is held, as required by Section 3-54-1, NMSA 1978, the Lease Commencement Date shall be suspended pending the outcome of the referendum election. If the results of the election are in favor of DDA, the Lease Commencement Date will commence on the date of the favorable election results. If the referendum election results are against the DDA, this Lease shall be immediately null and void. Notwithstanding the foregoing, if the City has not recorded a new plat map to subdivide the Property into parcels (the "**Plat**") in the real property records of the Clerk's Office of Santa Fe County, New Mexico ("**Official Records**") prior to the Lease Commencement Date, the Lease Commencement Date shall be suspended until the recording date of the Plat. Developer shall have the right to enter the Property to perform its obligations under the DDA on the Lease Commencement Date.

2.2 Upon the recordation of the Plat in the Official Records, the MRA Director will deliver written notice thereof to Developer ("**Plat Recording Notice**"), together with a copy of the recorded plat map and the platted legal description of the Property (the "**Legal Description**"), and the Developer shall execute and deliver to the City an acknowledgment including the Legal Description as Exhibit C to this Lease. Upon attachment of the Legal Description hereto, the City shall record this Lease in the Official Records. If the DDA is not approved, or if the DDA is approved and the referendum results are against the DDA, the City shall not be required to record the Plat or deliver a Plat Recording Notice to Developer.

2.3 This Lease shall expire 10 years following the Lease Commencement Date, unless earlier terminated (the "**Term**").

2.4 If Developer elects to acquire any Phase upon completion of an applicable Phase pursuant to the terms of the DDA, then upon the closing of the conveyance of such Phase (each a "**Closing**"), the Lease shall terminate with respect to such Phase and the Legal Description will be amended to remove the Phase so conveyed in accordance with Section 17.2 hereof. This Lease shall terminate in its entirety upon the earlier of (a) the expiration of the Term, (b) Developer's default under the terms of the DDA or this Lease, (c) upon the City's conveyance of all of the Property to Developer pursuant to the terms of the DDA, or (d) Developer's termination of the DDA as permitted under the DDA.

ARTICLE 3
RENT; TRIPLE NET LEASE; NO OFFSET

3.1 Developer hereby agrees to pay to the City the total base rent of $300,000.00 during the Term of the Lease ("**Rent**"), payable in annual installments of $30,000.00, without offset or reduction for any Partial Release (defined below). Such Rent shall be payable annually in advance, commencing on the Lease Commencement Date and on the same day of each year during the Term. Payment shall be made in good funds and shall be made to whomever the City designates in writing, from time to time.

3.2 In the event Developer fails to pay Rent when due and such failure continues beyond any notice and cure period provided in Section 13.1.3 hereof, then interest shall accrue at the rate of 18% per annum ("**Default Interest**") on the amount due and unpaid, compounded monthly, so long as said amount remains unpaid. The assessment and collection of the Default Interest is in addition to any other rights of the City, if the Developer does not faithfully perform the terms, covenants and conditions of this Lease.

3.3 It is expressly understood and agreed by and between the City and Developer that this Lease is a triple net lease, and the Rent, and all other sums payable hereunder to or on behalf of the City, shall be paid without notice or demand and without offset, counterclaim, abatement, suspension, deduction, or defense. This Lease shall yield to the City the Rent specified during the Term, and all costs and obligations of every kind and nature whatsoever relating to the Property shall be performed and paid by Developer. Developer shall perform all of its obligations under this Lease at its sole cost and expense.

ARTICLE 4
UTILITIES AND SERVICES

4.1 The City will provide gas and electricity to the Property pursuant to the terms of a utility agreement to be entered into by and between Developer and the City (the "**Utility Agreement**") and will invoice Developer for such gas and electric services as more specifically set forth in the Utility Agreement. Developer shall pay, when due, all charges for all other utility services used on the Property during the Term directly to the applicable utility provider, and for any other services in connection with Developer's operation of the Property. Developer may cause the installation of internet fiber in the existing utility rights-of-way located on the Property.

4.2 Developer shall be solely responsible for connection of such utilities to the Property, meter installation, tap and connection fees and all other costs and expense in connection with such utilities, as more specifically set forth in Utility Agreement.

ARTICLE 5
"AS IS" CONDITION OF PROPERTY

5.1 The Parties hereto intend that this Lease is made on an "as is, where is" basis with all faults. In connection therewith, the Parties hereto hereby agree as follows:

5.1.1 Developer acknowledges and agrees that the City has not made, does not make, will not make, and specifically disclaims, any representations, warranties, promises, covenants, agreements or guaranties of any kind or character whatsoever, whether express, implied, or statutory, oral or written, past, present or future, of, as to, concerning or with respect to: the nature, quality or condition of the Property or any part thereof, including, without limitation, the water, soil and geology; the economic feasibility of the Property or the income to be derived from the Property; the suitability of the Property for any and all activities and uses which Developer may conduct thereon; the nature and extent of any right-of-way, possession or title matter; the compliance of or by the Property, or the operation of any business or other enterprise thereon, with any laws, rules, ordinances or regulations of any applicable governmental authority or body; the rentability, habitability, merchantability or fitness for a particular purpose of the Property; or any other matter with respect to the Property.

5.1.2 Developer represents that it has investigated the Property prior to Lease Commencement Date, and that in leasing the Property, Developer has relied solely upon its independent examination, study, inspection and knowledge of the Property, including Developer's determination of the value of the Property and uses to which the Property may be put, and not on any information provided or to be provided by the City. Developer will make or cause to be made all inspections, investigations and analyses necessary or appropriate, in Developer's discretion, for the purpose of determining compliance or non-compliance by the Property with all building, health, environmental, zoning and land use laws, ordinances, rules and regulations, and the City makes no representation or warranty, express, implied or statutory, concerning the Property's compliance with such building, health, environmental, zoning and land use laws, ordinances, rules and regulations.

ARTICLE 6
TAXES

6.1 Taxes. Beginning on the Lease Commencement Date and throughout the Term, Developer shall pay, before they become delinquent, all taxes and assessments of any kind whatsoever levied, taxed or assessed against the Property, Developer, or the City during the Term related to or arising out of this Lease and the activities of the Parties hereunder, including without limitation, (i) all taxes or assessments upon the Property or any part thereof and upon any personal property, trade fixtures and improvements located on the Property, whether belonging to the City or Developer, or any tax or charge levied in lieu of such taxes and assessments; (ii) all taxes, charges, license fees and or similar fees imposed by reason of the use of the Property by Developer;

and (iii) all excise, franchise, transaction, privilege, license, sales, use and other taxes upon the Rent hereunder, the leasehold estate or the activities of Developer pursuant to this Lease.

6.2 Payment in Lieu of Taxes. In addition to the foregoing, commencing on January 1, 2026, and continuing through the Term, Developer shall pay to the City, in arrears, an annual payment in lieu of taxes for the preceding calendar year, in the following amounts for each Phase: (a) Phase 1: $37,500.00; (b) Phase 2: $10,700.00; and (c) Phase 3: $5,350.00 (collectively, the "**Annual Assessment**"). Developer shall pay to the City the total Annual Assessment due for the 2026 calendar no later than May 31, 2027, and shall pay to the City the Annual Assessment due for each calendar year thereafter no later than May 31st of each following calendar (including the calendar year following the expiration of the Term). In any calendar year in which the City conveys a Phase to Developer pursuant to the terms of the DDA, Developer shall pay to the City the prorata portion of the Annual Assessment for such Phase based on the number of days in such calendar year in which the City owned the applicable Phase. If the Santa Fe County Assessor levies a property tax for the assessed value of Developer's leasehold interest in the Property ("**County Assessment**"), the amount of the Annual Assessment then due to the City shall be reduced by the amount of the County Assessment paid by Developer to the Santa Fe County Assessor.

ARTICLE 7
ASSIGNMENT AND SUBLEASE

7.1 Developer shall not be permitted to Transfer (as defined in the DDA) all or any portion of Developer's rights or other interests under this Lease, without the prior written consent of the City, which consent may be withheld in the City's sole and absolute discretion. Any such attempted Transfer (except in connection with a Permitted Transfer as defined in and permitted in Article 15 of the DDA), without such consent shall be null and void. No Transfer, whether with or without consent, shall operate to release Developer or alter Developer's primary liability to perform its obligations under this Lease.

7.2 Based on the Lease Purpose (defined below), without the prior written consent of the City, which consent may be withheld in the City's sole and absolute discretion, Developer will not be permitted to sublease any of Developer's rights or obligations under this Lease; provided, however, Developer may, without the prior written consent of the City, sublease space within any building on the Property following substantial completion thereof to any residential, restaurant, retail and other commercial tenants for the use and occupancy of such buildings as contemplated under the DDA.

ARTICLE 8
PERMITTED USES; CONSTRUCTION; MAINTENANCE; APPLICABLE RULES.

8.1 Developer is permitted to use the Property solely for the purpose of carrying out Developer's obligations under the DDA, which includes Developer's development and operation of the Property in accordance with DDA ("**Lease Purpose**").

8.2 Subject to the development rights and obligations under the DDA, Developer shall, at Developer's sole cost and expense, be responsible for maintaining the Property in good condition and repair and in compliance with all laws.

8.3 Developer shall comply with all maintenance, repair and indemnification obligations under Article 12 of the DDA.

8.4 Developer shall comply with all Applicable Rules, as such term is defined in the DDA. Developer shall pay all costs, expenses, liabilities, losses, damages, fines, penalties, Claims (defined below) and demands, including reasonable attorney's fees, that may in any manner arise out of or be imposed because of the failure of Developer to comply with Applicable Rules.

8.5 Developer shall comply with Section 12.2 of the DDA regarding damage to Adjacent Land and Adjacent Improvements (each as defined in the DDA).

8.6 The City shall not be responsible for any maintenance, repair or replacement of any improvements located on the Property.

ARTICLE 9
USES PROHIBITED; ENVIRONMENTAL INDEMNITY

9.1 Developer shall not use or permit the use of the Property, or any part thereof, for any illegal purpose or purposes, nor shall Developer maintain a nuisance on the Property. The Property may not be used as a toxic waste dump or storage facility, a solid waste disposal site or any use which could have a harmful effect on the land itself.

9.2 Developer hereby agrees to indemnify, defend (with counsel reasonably approved by the City, as applicable) and hold harmless the City, the MRA or any department, governing body, commission, agency, official, officer, employee, agent, representative or volunteer of the City or the MRA (collectively, the "**City Parties**"), from any and all claims, encumbrances, liens, demands, suits, judgments, proceedings, damages, losses, liabilities, penalties, fines, costs and expenses (including reasonable attorneys' fees and court costs) ("**Liabilities**") (including, but not limited to expenses, penalties and clean-up costs) arising from and against any and all Claims brought against one or more City Parties related to the Project, arising out of or in any way relating to (a) the presence, release, use, generation, transportation, discharge, storage or as a consequence of disposal by Developer or Developer's officers, directors, managers, members, affiliates, agents, employees, representatives, contractors, subcontractors, any other person or entity acting at the direction or with the consent of Developer, assignees, subtenants, or licensees (collectively, including Developer, "**Developer Parties**", and individually, a "**Developer Party**"), or the presence of any Pollutants (as defined in the DDA) in, on or about the Property occurring as a result of or in connection with Developer Parties' use or occupancy of the Property, and in the removal, remediation and disposal of any Pollutants, and (b) the violation, or alleged violation, of any Environmental Laws (as defined in the DDA) relating to the use, generation, release, discharge, storage, disposal or transportation of Pollutants on, under, in or about, to or from the Property or migrating onto or under the Property from neighboring properties or otherwise affecting the Property, to the extent caused or permitted by any Developer Parties.

9.3 No Developer Party shall (i) manufacture, treat, use, improperly store or dispose of any Pollutant (as defined below) on the Property, or (ii) permit the release of a Pollutant on or from the Property, or (iii) permit the use of materials containing Pollutants on the Property in violation of applicable Environmental Laws (as defined in the DDA).

ARTICLE 10
GENERAL RELEASE & INDEMNIFICATION

10.1 Developer releases City Parties from, and covenants and agrees that the City Parties shall not be liable to Developer for, any loss or damage to property or any injury to or death of any person or persons caused by Developer Parties by any cause whatsoever pertaining to the Project, the Property, the use thereof, or any other transaction contemplated by this Lease; provided that such release shall not apply to any loss or damage caused by the negligence, acts or omissions of the City Parties.

10.2 Developer shall indemnify, defend (with counsel reasonably approved by the City, as applicable) and hold harmless the City Parties from all Liabilities, arising from any all claims ("**Claims**") brought against one or more City Parties by any third-party which arise out of or in connection with the Property or any activities, acts or omissions of any of the Developer Parties; provided, however, such indemnity shall not apply to any Liabilities caused by the negligence, acts or omissions of any City Parties and shall be subject to the limitations of NMSA 1978, Section 56-7-1. Developer's indemnity obligations owing to the City Parties under this Section are not limited by applicable insurance coverage required hereunder. The City shall, after receipt of notice of the existence of a Claim for which it is entitled to indemnity hereunder, notify Developer in writing of the existence of such Claim or commencement of such action.

10.3 The provisions of this Article 10 shall survive any expiration or earlier termination of this Lease.

ARTICLE 11
INSURANCE

11.1 During the Term, and for such other time as specified hereinbelow, Developer shall comply with the following insurance requirements:

11.1.1 *Workers' Compensation*. During the Term, Developer shall, at its sole cost and expense, fully comply with the terms of the laws of the State of New Mexico concerning workers' compensation. Said compliance shall include maintaining in full force and effect one or more policies of insurance insuring against any liability Developer may have for workers' compensation. Said policy shall also include Employer's Liability coverage no less than $1,000,000 per accident; $1,000,000 policy limit bodily injury by disease; $1,000,000 each employee bodily injury by disease. The Workers' Compensation policy shall be endorsed with a waiver of subrogation in favor of the City and City Parties.

11.1.2 *General Liability Insurance*. During the Term and for a period of 10 years following Final Completion (as defined in the DDA) of the Project, Developer shall, at its sole cost and expense, obtain and keep in full force and effect commercial general liability

insurance with contractual liability coverage, which policy shall be written on an occurrence basis providing coverage at least as broad as Insurance Services Office (ISO) form CG 00 01, for claims against bodily injury (including death), personal injury, and property damage with limits not less than $5,000,000 per occurrence, $5,000,000 in the aggregate, and Products and Completed Operations of $5,000,000 in the aggregate, and property damage and shall be endorsed with a waiver of subrogation in favor of the City Parties. Said policy shall be primary, and any insurance or self-insurance maintained by the City Parties shall not be required to contribute with it. Any excess or umbrella coverage shall not include any limitations or exclusions from the primary coverage and shall also be endorsed to name the City Parties as additional insureds. Developer's Commercial General Liability coverage shall:

(a) include the following endorsements:

(i) An Aggregate Limit Per Project endorsement;

(ii) ISO Additional Insured endorsements with coverage at least as broad as CG 20 10 (ongoing operations) and CG 20 37 (completed operations) or a blanket additional insured endorsement, in each case naming the City Parties as additional insureds, provided that, if the blanket additional insured endorsement is used, premises and operations, as well as products-completed operations coverage must be provided to the City Parties;

(iii) A Waiver of Subrogation endorsement in favor of the City Parties or a blanket waiver of subrogation endorsement; and

(iv) A Primary, Non-contributory endorsement in favor of the City Parties or a blanket primary, non-contributory endorsement.

(b) The Commercial General Liability policy shall <u>not</u> include the following endorsements:

(i) Amendment of Contractual Liability;

(ii) Total Pollution Exclusion;

(iii) Cross Claims or Cross Suits Liability Exclusion;

(iv) X, C, U Exclusion (Explosion, Collapse, and Underground Hazard); and

(v) Subsidence of Soil or Earth Movement Exclusion.

11.1.3 *Automobile Liability Insurance*. In the event Developer utilizes automobiles as part of its operations, use, or occupancy of the Property. during the term of this Agreement, Developer shall, at its sole cost and expense, obtain and keep in full force and effect a policy of automobile liability insurance, with a combined single limit (CSL) in the amount of $2,000,000 per accident for bodily injury and property damage for any owned, hired and non-owned vehicles used in the performance of this Agreement. Said policy shall include Contractual Liability and the following coverages and endorsements: (a) a Broadened Pollution Coverage endorsement; (b) an endorsement naming the City Parties or a blanket additional insured endorsement; (c) A Waiver

of Subrogation endorsement in favor of the City Parties or a blanket waiver of subrogation endorsement; (d) a Primary, Non-contributory endorsement in favor of the City Parties or a blanket primary, non-contributory endorsement; and (e) notice of cancellation/non-renewal to the City, providing 30-days prior notice of cancellation or non-renewal, excepting only non-payment of premium, which will be 10-days prior notice.

11.1.4 *Course of Construction/Builder's Risk Insurance*. During all construction and/or renovation work on the Property, Developer shall, at its sole cost and expense, obtain and keep (or cause its contractors to maintain and keep) in full force and effect Course of Construction/Builder's Risk insurance covering "Special Form" (All Risks) of direct physical loss, including, but not limited to, fire, theft, water, explosion, vandalism, mechanical breakdown, electrical arcing, ordinance or law, in an amount to cover the total value of the construction Project, including all subsequent change orders, without co-insurance penalties. Such coverage shall include all items of labor and material, soft costs such as loss of income, architect and engineering fees, building permits and any other non-recurring costs as may be appropriate for Developer or its Contractor. Said insurance policy shall: (a) include Developer, its contractors and subcontractors, and the City as insureds; (b) be maintained until the completion of the applicable construction; and (c) provide coverage from the time any covered property becomes the responsibility of Developer, and continue without interruption during construction, renovation, or installation.

11.1.5 *Contractors Pollution Liability Insurance*. A contractor's pollution liability policy with limits of at least $2,000,000 per claim and an aggregate limit of $2,000,000 with a deductible not to exceed $25,000. Coverage must be included for bodily injury and property damage, including coverage for loss of use and/or diminution in property value, and for clean-up costs, arising out of, pertaining to, or in any way related to the actual or alleged discharge, dispersal, seepage, migration, release or escape of contaminants or pollutants resulting from any services or work performed by Developer or its contractors under this Agreement, including the transportation of hazardous wastes, hazardous materials, or contaminants. Developer warrants that any retroactive date applicable to the coverage under the policy is the same as or precedes the Lease Commencement Date and that continuous coverage will be maintained or an extended discovery period will be exercised for a period of three years beginning from the time any construction performed under this Agreement is completed or if coverage is cancelled for any reason the extended discovery period will be exercised for the maximum time allowed by the policy. The Pollution Liability coverage shall include the following endorsements:

(a) ISO Additional Insured endorsements with coverage at least as broad as ISO forms CG 20 10 (ongoing operations) and CG 20 37 (completed operations) naming the City Parties or a blanket additional insured endorsement applicable "when required by written contract or agreement", provided that, if the blanket additional insured endorsement is used, premises and operations as well as products-completed operations coverage must be provided for the City Parties;

(b) A Waiver of Subrogation endorsement in favor of the City Parties or a blanket waiver of subrogation endorsement; and

(c) A Primary, Non-contributory endorsement in favor of the City Parties or a blanket primary, non-contributory endorsement.

11.1.6 *Professional Liability*. If Developer provides project management, design-build, engineer, architect or other types of professional services to the City, Developer shall obtain and maintain Professional Liability coverage with limits not less than $5,000,000 per claim and $5,000,000 aggregate limit. Such insurance coverage shall be sufficiently broad to respond to the duties and obligations as is undertaken by Developer in this Agreement, and shall include (a) a retroactive date no later than the Lease Commencement Date; and (b) an extended reporting period of not less than five years after the termination of this contract.

11.1.7 *Property Insurance*. Developer shall maintain "Special Form" (All-Risks) property insurance upon property of every description owned by Developer and located on the Premises, or for which Developer is legally liable, including without limitation, furnishings, fixtures, and equipment. Such insurance shall be in an amount equal to one hundred percent (100%) of the full insurable replacement value of the property. The City shall be included as loss payee.

11.1.8 *Subcontractor Insurance*. Developer shall ensure that all contractors and subcontractors are licensed in the State of New Mexico and as otherwise required by the Applicable Rules. Developer shall cause all subcontractors performing work at the Property to maintain appropriate insurance, including, but not limited to, Workers' Compensation, Commercial General Liability and Automobile Insurance in a form and with limits deemed appropriate by Developer for work performed in connection with this Agreement. Developer acknowledges that Developer is solely responsible for obtaining, prior to the commencement of any work at the Property by such Persons and maintaining from time to time thereafter current certificates of insurance and applicable endorsements from its contractors/subcontractors, and this information shall be promptly made available to the City upon request. Developer shall require all subcontractors to obtain the following endorsements:

(a) ISO Additional Insured endorsements with coverage at least as broad as ISO forms CG 20 10 and CG 20 37 naming Developer and the City Parties as additional insureds or a blanket additional insured endorsement applicable "when required by written contract or agreement", provided that, if the blanket additional insured endorsement is used, premises and operations as well as products-completed operations coverage must be provided for Developer and the City Parties;

(b) A Waiver of Subrogation endorsement in favor of the City Parties or a blanket waiver of subrogation endorsement; and

(c) A Primary, Non-contributory endorsement in favor of the City Parties or a blanket primary, non-contributory endorsement.

11.1.9 *Provisions Applicable to All Insurance Requirements*. Prior to the Construction Commencement (as defined in the DDA) at the Property or any portion thereof and annually thereafter, Developer shall furnish or cause to be furnished to the City certificates of insurance and all applicable endorsements evidencing the foregoing insurance coverages and limits. If any coverage is maintained on a claims-made basis, the following shall apply:

(a) The retroactive date must be shown and must be before the date of this Agreement or the beginning of any work or services under this Agreement;

(b) Except as otherwise set forth herein, coverage must be maintained and evidence of coverage must be provided for at least five years after termination of this Agreement;

(c) If coverage is canceled or non-renewed, and not replaced with another claims-made policy form with a retroactive date prior to the Lease Commencement Date, Developer must purchase an extended reporting period for a minimum of five years after termination of this Agreement; and

(d) All insurance policies shall be written by an insurer with an A.M. Best rating of not less than A- (Excellent), Financial Size Category VII, and must be authorized to do business within the state of New Mexico; and

(e) Developer shall cause its insurer to deliver written notice to the City no later than 30-days prior to any cancellation or nonrenewal, and shall deliver to the City a copy of any notice of cancellation or nonrenewal within five days of Developer's receipt of such notice from its insurer.

ARTICLE 12
CONDEMNATION; CASUALTY

12.1 Condemnation.

12.1.1 Should the entire Property be taken (which term, as used in this Section, shall include any conveyance in avoidance or settlement of eminent domain, condemnation or other similar proceedings) by any governmental authority, corporation or other entity, excluding the City, under the right of eminent domain, condemnation or similar right, then this Lease shall terminate as of the date of taking possession by the condemning authority, and the award therefor will be distributed to the City and the Developer pro rata to their actual losses. After the distribution of the condemnation award as herein provided, this Lease shall terminate, and the parties shall have no further rights, duties or obligations under this Lease.

12.1.2 Should any portion of any Phase be taken by any governmental authority, corporation or other entity under the right of eminent domain, condemnation or similar right, such that (a) the untaken portion of such Phase is, in either Party's reasonable discretion, insufficient for the economic or feasible operation thereof by Developer; or (b) any access is taken that materially prohibits use of such Phase, unless reasonable alternate access is provided by the City, then Developer may either terminate this Lease and DDA with respect to the affected Phase as of the date of taking possession by the condemning authority in the same manner as provided in Section 12.1.1 for the entire Property and the award therefor shall be distributed as provided in Section 12.1.1, or Developer may continue to pursue its obligations under this Lease and the DDA with respect to the affected Phase. Should any other partial taking of the Property occur, then this Lease nevertheless shall continue in effect as to the Property, or the remainder thereof, as the case may be. In the event of a partial taking where this Lease is not terminated, the Rent payable during the remainder of the Term after taking of possession by the condemning authority shall be reduced on a just and proportionate basis having due regard to the relative value and square footage of the portion of the Property thus taken as compared to the remainder thereof and taking into

consideration the extent, if any, to which Developer's use of the remainder of the Property shall have been impaired or interfered with by reason of such partial taking.

12.2 Casualty. Developer covenants and agrees that in the event of damage to the Property or destruction of the whole or any part thereof, by any cause whatsoever, Developer shall proceed immediately and diligently to restore the Property to the same or equivalent condition or status as on the Lease Commencement Date.

ARTICLE 13
EVENT OF DEFAULT

13.1 The following constitute an "**Event of Default**" under this Lease:

13.1.1 an Event of Default (as such term is defined in the DDA) occurs under the DDA; or

13.1.2 Developer fails to pay in full when due any installment of Rent or other amount due hereunder within 30 days after such due date; or

13.1.3 Developer breaches or fails perform or observe any other requirement of this Lease not otherwise specifically referred to in this Article 13, and such failure continues for 30 days after written notice thereof from the City to Developer, provided, however, that such breach or failure will not constitute an Event of Default if such breach or failure cannot reasonably be cured within said 30-day period so long as (i) Developer, within said 30-day period, initiates and diligently and continuously pursues appropriate measures to remedy the breach or failure, and (ii) such breach or failure is cured within 90 days after Developer's receipt of the notice from the City with respect thereto.

13.2 Remedies. Upon the occurrence of an Event of Default, the City may take any of the following actions, and without limiting the City in the exercise of any other right and/or remedy which the City may have by reason of such Event of Default under this Lease:

13.2.1 If such Event of Default results in a Termination Event (as defined in the DDA), the City may terminate this Lease (in whole or in part) by giving Developer written notice thereof, effective at such time as may be specified by notice to Developer. The City may through any permitted legal process reenter and take possession of the Property and the improvements thereon without prejudice to any remedies for arrears of Rent or existing breaches hereof. In the event of such termination, Developer shall be liable to the City for damages immediately payable in an amount equal to the actual damages incurred by the City, including all expenses incurred by the City in enforcing its rights hereunder.

13.2.2 The City may through any permitted legal process reenter and take possession of the Property and the Buildings and without prejudice to any remedies for arrears of Rent or existing breaches hereof, lease, manage and operate the Property and collect the rents, issues and profits therefrom all for the account of Developer, and credit to the satisfaction of Developer's obligations hereunder the net rental thus received (after deducting therefrom all

reasonable costs and expenses of repossessing, leasing, managing and operating the Property, including, but not limited to brokerage commissions and any costs associated with advertising, remodeling, alterations or repair of the Property). If the net rental so received by the City exceeds the amounts necessary to satisfy all of Developer's obligations under this Lease, nevertheless the City shall retain such excess. The City shall use commercially reasonable efforts to mitigate its damages.

13.2.3 The City may bring an action against Developer for actual damages incurred by the City or any equitable relief available to the City and to the extent not prohibited by applicable law, to seize all personal property or fixtures upon the Property which Developer owns or in which it has an interest, in which the City shall have a landlord's lien and/or security interest, and to dispose thereof in accordance with the laws prevailing at the time and place of such seizure or to remove all or any portion of such property and cause the same to be stored in a public warehouse or elsewhere at Developer's sole expense, without becoming liable for any loss or damage resulting therefrom and without resorting to legal or judicial process, procedure or action.

13.2.4 If, after the City exercises its remedies in Section 13.2.1 or Section 13.2.2, Developer remains in possession of the Property or any portion thereof without express written approval of the City for such holdover possession, such possession may, at the sole option of the City, continue as a month-to-month tenancy, during which period Developer shall pay the City Holdover Rent on a monthly basis in advance on the first day of each calendar month thereafter, and all other terms and conditions of this Lease shall otherwise apply. "**Holdover Rent**" shall mean the then current market rent, as of the commencement of the holdover possession, for similar properties located in Santa Fe County, NM, as determined by the City in its sole discretion. The City may terminate such holdover possession in accordance with applicable law.

ARTICLE 14
SURRENDER

With respect to any portion of the Property remaining under this Lease upon the expiration or earlier termination of this Lease, Developer shall peaceably and quietly leave, surrender and deliver such Property to the City, together with all alterations, changes, additions and improvements located thereon, all of the foregoing to be surrendered in good and sufficient repair, order and condition, reasonable use, wear and tear excepted, and free of liens and occupants. Notwithstanding the foregoing, on or prior to the expiration or earlier termination of this Lease, Developer shall have the right to remove any and all personal property of Developer. Developer shall pay for the cost to repair or remedy any damage caused by Developer's removal of any such personal property, providing that no item may be removed if its removal would impair the structural integrity of any Building or any part thereof. All personal property not so removed shall be deemed abandoned and may either be retained by the City as its property or disposed of, without accountability, in such manner as the City may see fit.

ARTICLE 15
DEVELOPER FINANCING

15.1 Leasehold Mortgages. Throughout the Term, Developer may from time to time and without the City's consent, execute and deliver a mortgage, deed of trust, security agreement

or other hypothecating instrument (a "**Leasehold Mortgage**") encumbering Developer's leasehold interest in the Property (the "**Leasehold Estate**") for the benefit of a leasehold lender providing financing for Developer's obligations under the DDA (a "**Leasehold Mortgagee**"); provided, however, (a) no Leasehold Mortgage may constitute a lien on the fee title of the City, (b) the City shall not be required to encumber or subordinate, and nothing in this Lease will be construed as the City agreeing to encumber or subordinate, the City's right, title or interest in and to the fee interest to the Property, this Lease, the DDA, or the City's ROFR in the Property under the DDA, and (c) the City shall not be required to undertake any personal liability for the obligations of Developer secured or to be secured by any Leasehold Mortgage. Any Leasehold Mortgage and all rights acquired thereunder shall be subject all covenants, conditions and restrictions set forth in this Lease, including all obligations to comply with the terms and conditions of the DDA, and to all rights and interests of the City. Within 30 days after the recordation of a Leasehold Mortgage, Developer shall furnish to the City a complete copy of such recorded Leasehold Mortgage. In the event of a default by Developer under a Leasehold Mortgage, the City consents to the exercise by the Leasehold Mortgagee of any of its rights and remedies permitted under such Leasehold Mortgage, provided that such Leasehold Mortgagee delivers written notice to the City of such default prior to the exercise of any such remedies, and upon a Mortgagee Transfer Event (defined below), Leasehold Mortgagee (or its nominee or designee approved by the City ("**Approved Designee**")) shall assume all of Developer obligations under the DDA. A "**Mortgagee Transfer Event**" means that the Leasehold Mortgagee (or its Approved Designee) obtained possession of the Property through one of the following by Leasehold Mortgagee: (x) foreclosure or exercise of other remedies under the Leasehold Mortgage, (y) assumption of this Lease, or (z) a Replacement Lease (defined below). In no event shall a Leasehold Mortgage's exercise of remedies under a Leasehold Mortgage affect the City's rights or Developer's obligations under this Lease.

15.2 Leasehold Mortgagee's Rights to Cure a Lease Default. Prior to terminating this Lease or exercising any other right or remedy due to an Event of Default, the City will give written notice to the Leasehold Mortgagee, provided that the Leasehold Mortgage previously notified the City of its name, its address for notices and the fact that it is a Leasehold Mortgagee of a Leasehold Mortgage and includes with such notice a copy of the Leasehold Mortgage by virtue of which it became a Leasehold Mortgagee (a "**Notice Mortgagee**"), of any such Event of Default and shall afford the Notice Mortgagee a period of 30 days after notice is given in which to cure such Event of Default; provided, however, that (a) if such Event of Default is not a failure to pay Rent and is susceptible of cure by the Notice Mortgagee but cannot reasonably be cured within such 30-day period, then so long as the Notice Mortgagee commences a cure within such 30-day period (and notifies the City that it has done so), its cure period will be extended for as long as reasonably necessary for it to diligently pursue the cure to completion, but in no event longer than 90 days; and (b) if such Event of Default is not a failure to pay Rent and is susceptible of cure by the Notice Mortgagee but cannot reasonably be cured until the Notice Mortgagee obtains possession of the Property, then so long as the Notice Mortgagee commences to foreclose or otherwise enforce its Leasehold Mortgage (or assumes this Lease in lieu thereof) and thereafter diligently pursues such foreclosure, remedy or assumption to completion (and notifies the City that it has done so), Notice Mortgagee's 30-day cure period will be extended for as long as reasonably necessary for it to obtain possession of the Property and then promptly commence and thereafter diligently pursue the cure to completion, but in no event longer than 90 days after Notice Mortgagee obtains possession.

15.3 Notice Mortgagee's Right to Attorn. If, by virtue of an Event of Default, the City reenters and repossesses the Property without terminating this Lease or terminates this Lease, the City will give notice thereof to the Notice Mortgagee within 10 days prior to such reentry and repossession or termination, as the case may be. If the Notice Mortgagee notifies the City within 30 days after the City gives such notice that the Notice Mortgagee would like to attorn to the City and either assume Developer's obligations under this Lease (in the case of a reentry and repossession without termination of this Lease) or enter into a new lease with the City for the Property pursuant to the terms hereof (a "**Replacement Lease**") (in the case of a termination of this Lease), and provided that the Notice Mortgagee (a) pays the City all Rent, penalties and Default Interest due the City under this Lease at the date of reentry and repossession or termination and which thereafter becomes due or would have become due if this Lease had not been terminated up to and including the date the Notice Mortgagee's attornment to the City becomes effective, together with all of the City's expenses incident to the reentry and repossession or termination; and (b) covenants to promptly thereafter cure any Event of Default existing at the time of such reentry and repossession or termination that is not a failure to pay Rent and is susceptible of cure by the Notice Mortgagee pursuant to Section 15.2(b), then (i) the City will accept such attornment and either deliver possession of the Property to the Notice Mortgagee (or its Approved Designee) if the City has reentered and repossessed the same without terminating this Lease, whereupon the Notice Mortgagee (or its Approved Designee) will assume in writing all obligations of Developer arising under this Lease and the DDA from and after the date possession is so delivered and this Lease will continue in full force and effect as a direct obligation between the City and the Notice Mortgagee (or its Approved Designee), or (ii) the City will execute and deliver one Replacement Lease for the Property to the Notice Mortgagee (or its Approved Designee) for the balance of what would have been the Term had this Lease not been so terminated and otherwise upon all of the same terms and conditions set forth in this Lease. The lessee under the Replacement Lease will have the same leasehold interest in the Property as Developer had under this Lease.

15.4 Notice Mortgagee Limitation on Liability. Except for Developer's obligations under the DDA assumed by the Leasehold Mortgagee as required by this Lease, a Notice Mortgagee shall not have any other obligations under this Lease arising prior to the earlier of the date that the Notice Mortgagee assumes the obligations of Developer under this Lease or obtains absolute title to the Leasehold Estate. Any such Notice Mortgagee shall be liable to perform obligations under this Lease only for and during the period of time that such Notice Mortgagee directly holds such absolute title to the Leasehold Estate, except for any outstanding obligations of Developer's to be performed under the DDA. Further, in the event that a Notice Mortgagee elects to (a) perform Developer's obligations under this Lease, (b) continue operations on the Property, (c) acquire Developer's Leasehold Estate, or (d) enter into a Replacement Lease, then such Notice Mortgagee shall not have any personal liability to the City in connection therewith, and the City's sole recourse in the event of default by such Notice Mortgagee shall be to execute against such Notice Mortgagee's interest in the Leasehold Estate. Moreover, any Notice Mortgagee who acquires Developer's interest in the Leasehold Estate pursuant a Mortgagee Transfer Event shall not be liable to perform any obligations thereunder to the extent the same are incurred or accrue after such Notice Mortgagee no longer has ownership of the Leasehold Estate created thereby.

15.5 Prohibition Against Mutual Rescission. Except for a Partial Release (defined below), no mutual termination, cancellation or rescission of this Lease by the City and Developer will be effective unless and until the same is approved in writing by the Notice Mortgagee.

15.6 Bankruptcy. If this Lease is rejected in connection with a bankruptcy proceeding by Developer or a trustee in bankruptcy for Developer, such rejection, to the extent permitted under the Bankruptcy Code, shall be deemed an assignment by Developer to the Notice Mortgagee of the Leasehold Estate and all of Developer's interest under this Lease, and this Lease shall not terminate, and the Notice Mortgagee shall have all the rights of the Developer under this Lease as if such bankruptcy proceeding had not occurred, unless such Notice Mortgagee rejects such deemed assignment by notice in writing to the City within 30 days following rejection of this Lease by Developer or Developer's trustee in bankruptcy. If any court of competent jurisdiction shall determine that this Lease shall have been terminated notwithstanding the terms of the preceding sentence as a result of rejection by Developer or the trustee in connection with any such proceedings, the rights of one Notice Mortgagee to a Replacement Lease from the City pursuant to Section 15.2 hereof shall not be affected thereby.

ARTICLE 16
LEASE SUBORDINATE

16.1 This Lease and all of Developer's rights hereunder shall be subordinate to the lien and terms of any mortgage, deed of trust and related documents now or hereafter placed upon the Property by any lender of the City (if any, a "**City Mortgagee**") (including all advances made thereunder), and to all amendments, renewals, replacements, or restatements thereof (collectively, "**Mortgage**") unless any City Mortgagee elects to have this Lease superior to the lien and terms of its Mortgage pursuant to Section 16.2 below. Developer agrees that no documentation other than this Lease is required to evidence such subordination.

16.2 If any City Mortgagee elects to have this Lease superior to the lien of its Mortgage and gives notice to Developer, this Lease will be deemed prior to such Mortgage whether this Lease is dated prior or subsequent to the date of such Mortgage or the date of recording thereof.

16.3 In confirmation of subordination or superior position, as the case may be, Developer will execute such documents as may be required by any City Mortgagee and if it fails to do so within 10 days after demand, Developer hereby irrevocably appoints the City as Developer's attorney-in-fact and in Developer's name, place, and stead, to do so.

16.4 Following Developer's request therefor, the City shall use commercially reasonable efforts to obtain from any future City Mortgagee, a subordination, non-disturbance and attornment agreement on such City Mortgagee's form.

16.5 Developer hereby attorns to all successor owners of the Property, whether such ownership is acquired by sale, foreclosure of a Mortgage, or otherwise.

ARTICLE 17
PARTIAL RELEASE

17.1 During the Term, Developer will redevelop the Property in three phases (each, a "**Phase**" and, collectively, the "**Phase**s"), as depicted in the Property delineation map set forth on Exhibit B attached hereto. The real property and improvements, collectively, comprising the first, second and third Phases of the Property are referred to herein as "**Phase 1**", "**Phase 2**" and "**Phase 3**," respectively.

17.2 It is the intention of the Parties that the City shall convey the Phase 1, Phase 2, and Phase 3 portions of the Property in accordance with the DDA as the Developer completes the Phase 1 Closing Conditions, the Phase 2 Closing Conditions, and the Phase 3 Closing Conditions, as those are defined in the DDA, as applicable. pursuant to the terms of Article 10 of the DDA. As each Phase is conveyed to Developer, the Legal Description shall be automatically amended to remove the legal description of the applicable Phase to reflect the conveyance of such Phase to Developer (each, a "**Partial Release**").

ARTICLE 18
MISCELLANEOUS

18.1 Commissions. Developer hereby represents and warrants that it has not entered into contracts with any brokers or finders nor has Developer obligated itself to pay any real estate commissions or finder's fees on account of the execution of this Lease. The City hereby represents and warrants that it has not entered into contracts with any brokers or finders nor has the City obligated itself to pay any real estate commissions or finder's fees on account of the execution of this Lease. Based on such representations and warranties, the City and Developer hereby agree to indemnify and hold the other harmless from and against all claims, damages, expenses, liabilities, liens or judgments (including costs, expenses and attorneys' fees in defending the same) which arise on account of any claim that real estate commissions or finders' fees are payable and have not been discharged in their entirety.

18.2 Quiet Enjoyment. Except during the existence of an Event of Default and subject to the provisions of this Lease and the DDA, the City shall not disturb Developer's quiet possession of the Property for the entire Term. Developer acknowledges that the City's performance of its obligations under Article 8 of the DDA may restrict or temporarily prevent Developer's use of and/or access to the Property or otherwise inconvenience Developer. Developer agrees that no such events shall constitute a constrictive eviction of Developer or give rise to any remedies or right of Developer against the City; provided, however, if the City's performance of its obligations under Article 8 of the DDA substantially deprives Developer of its beneficial use and access to all of the Property for more than 30 consecutive days after written notice from Developer to the City, Rent shall abate commencing at the end of said 30 day period until the cessation of the activity causing the deprivation, unless the City has commenced to cure such cause or remediate such deprivation with reasonable diligence within such 30-day period. Further, the City shall under no circumstances be held responsible for any restriction or disruption of the use of or access to the Property from public streets caused by construction work or other actions taken by Developer or any Developer Parties, any other tenant or any third-party, or their contractors, employees, agents, visitors, or invitees, or any other cause not within the City's control, and any such circumstances shall not constitute a constructive eviction of Developer nor give rise to any remedies or right of Developer against the City.

18.3 Compliance with Laws. Through the Lease Term, Developer shall comply, and cause Developer Parties to comply, with all Applicable Rules then in effect, including the Americans With Disabilities Act of 1990 (42 U.S.C. Section 12101, et seq., as amended, the "**ADA**"). Developer agrees to be responsible for knowing all applicable requirements of the ADA and to defend, indemnify and hold harmless the City, its officials, agents and employees from and against any and all claims, actions, suits or proceedings of any kind brought against said parties as a result of any acts or omissions of Developer or Developer Parties in violation of the ADA.

18.4 Discrimination Prohibited. Developer shall comply, and cause the Developer Parties to comply, with Applicable Rules relating to discrimination against or segregation of any Person or group of Person, and will not on the grounds of ethnicity, race, age, religion, creed, color, national origin, ancestry, sex, gender, sexual orientation, sexual preference, marital status, source of income, physical or mental disability, medical condition, or citizenship status, discriminate or permit discrimination against any Person or group of Persons in any manner prohibited by Title 49 CFR Parts 21 and 23, the Civil Rights Act of 1964, as amended, the Equal Pay Act of 1963, the Rehabilitation Act of 1973, the New Mexico Human Rights Act, and SFCC 1987 Section 2.02. Without limiting the generality of the foregoing, Developer will not discriminate against any employee or applicant for employment or tenancy because of ethnicity, race, age, religion, creed, color, national origin, ancestry, sex, gender, sexual orientation, sexual preference, physical or mental disability, medical condition, or citizenship status. Such covered actions include, without limitation: employment, promotion, demotion, or transfer; recruitment or recruitment advertising; layoff or termination; rates of pay or other forms of compensation; selection for training; and disciplinary actions and grievances. Developer agrees to post in conspicuous places available to employees, and applicants for employment, notice to be provided setting forth the provisions of this non-discrimination clause.

18.5 Recordation. Promptly after the later of the Lease Commencement Date and the recordation of the Plat, the City shall record an executed original of this Lease in the real property records of the Clerk's Office of Santa Fe County, New Mexico (the "**Official Records**"). All amendments, transfers, and assignments hereto must be in writing signed by the appropriate officers of the City and Developer in a form suitable for recordation in the Official Records.

18.6 Run with the Land. This Lease, including all covenants, agreements, rights, restrictions and obligations contained herein, shall run with the Property until expiration of the Lease. Except as provided herein, all covenants, agreements, rights, restrictions and obligations contained herein shall inure to the benefit of and be binding upon the Parties hereto and their respective successors and permitted assigns, and all persons claiming under them. In the event this Lease is terminated by the City with respect to all or any portion of the Property, this Lease may be released of record, in whole or in part, upon execution and recording by the City of a notice of termination or other instrument evidencing such termination.

18.7 Notices. Any notice, request, demand, instruction or other document to be given or served hereunder or under any document or instrument executed pursuant hereto shall be in writing and shall be delivered either personally with a receipt requested therefor, or by overnight courier, or by certified mail, return receipt requested, postage prepaid, in any case addressed to the Parties at their respective addresses set forth below, and the same shall be effective (a) upon receipt or refusal if delivered personally, (b) one Business Day after depositing with such an overnight courier service, (c) three Business Days after deposit in the mail if mailed, or (d) upon successful electronic mail transmission evidenced by an electronic "read receipt" and provided that such

notice is also delivered by the means described in clauses (a) or (b) within two Business Days after such electronic mail notice. A Party may change its address for receipt of notices by service of a notice of such change in accordance herewith. "**Business Day**" means Monday through Friday and specifically excludes any federal, state, and City holidays and any additional days on which City offices are closed (other than essential services). All notices to the City or Developer shall be sent to the persons and addresses set forth below. A Party may change its address for receipt of notices by service of a notice of such change in accordance herewith.

If to the City:	City of Santa Fe Attn: City Manager P.O. Box 909 Santa Fe, NM 87504
with a copy to:	Midtown Redevelopment Agency Attention: MRA Director 200 Lincoln Avenue Santa Fe, NM 87505
If to Developer:	Aspect QOZB, LLC Attention: Phillip Gesue 1954 Siringo Road Santa Fe, NM 87501
with a copy to:	Long, Komer & Associates, P.A. Attention: Nancy R. Long P.O. Box 5098 1800 Old Pecos Trail, Suite A Santa Fe, NM 87505

18.8 Relationship Between Parties. Notwithstanding any language in this Lease or any representation or warranty to the contrary, the relationship between the City and Developer shall be as landlord and tenant, respectively, and neither the City nor Developer shall be deemed or constitute an employee, servant, agent, partner or joint venturer of the other.

18.9 No Third-Party Rights. This Lease is for the sole and exclusive benefit of the Parties and their respective successors and permitted assigns, and no third party other than a permitted assignee of the City or Developer is contemplated to or shall have any rights hereunder.

18.10 Counterparts. This Lease may be signed in multiple counterparts or with detachable signature pages, but either or both circumstances shall constitute one instrument, binding upon all Parties thereto as if all Parties signed the same document. If so executed, each such counterpart of this Lease is to be deemed an original for all purposes and all such counterparts will collectively constitute one Lease, but in making proof of this Lease, it will not be necessary to produce or account for more than one such counterpart.

18.11 Time of Essence. Time is expressly made of the essence with respect to the performance by Developer of every obligation and condition of this Lease.

18.12 Computation of Time. All references herein to "days" mean calendar days. All references herein to "months" mean the period starting on one day in a calendar month and ending on the numerically corresponding day in the next calendar month, except that, solely with respect to the last month of any period (a) if the numerically corresponding day is not a Business Day, that period will be deemed to end on the next Business Day, (b) if there is no numerically corresponding day in the next calendar month, then that period shall end on the first Business Day after the last day of that month. In computing any period of time under this Lease in which days define the period, (i) the date of the act or event from which the designated period of time begins to run shall not be included, and (ii) the last day of the period so computed shall be included unless it is a day other than a Business Day, in which event the day for performance thereof shall be extended to the next Business Day. If any act is to be done by or within a period of time, the last day of said period of time shall be deemed to end at 5:00 p.m. MT.

18.13 Force Majeure. Neither the City nor Developer shall be deemed to be in default hereunder if either Party is prevented from performing any of the obligations, other than monetary obligations hereunder, by reason of a Force Majeure Event, as such term is defined in the DDA. An extension of time for any Force Majeure Event shall commence to run from the time of the commencement of the Force Majeure Event if notice by the Party claiming such extension is sent to the other Party within 30 days of the commencement of the cause. If such notice is delivered after such 30-day period, the extension period shall commence to run from the date of such notice. After the termination of any such Force Majeure Event, the obligation to perform shall recommence with a day-for-day delay extension to any deadlines.

18.14 Severability. In the event any covenant, condition or provision herein is held to be invalid, illegal, or unenforceable by any court of competent jurisdiction, such covenant, condition or provision shall be deemed amended to conform to Applicable Rules so as to be valid or enforceable or, if it cannot be so amended without materially altering the intention of the parties, it shall be stricken. If stricken, all other covenants, conditions and provisions of this Lease shall remain in full force and effect provided that the striking of such covenants, conditions or provisions does not materially prejudice either the City or Developer in its respective rights and obligations contained in the valid covenants, conditions or provisions of this Lease.

18.15 Interpretation. Whenever the words "include," "includes" or "including" are used in this Lease they shall be deemed to be followed by the words "without limitation." The words "hereof", "herein" and "hereunder" and words of similar import when used in this Lease shall refer to this Lease as a whole and not to any particular provision of this Lease. Unless otherwise expressly provided herein, any agreement, instrument or statute defined or referred to herein or in any agreement or instrument defined or referred to herein means such agreement, instrument or statute as from time to time amended, modified or supplemented, including (in the case of agreements or instruments) by waiver or consent and (in the case of statutes) by succession of comparable successor statutes, and references to all attachments thereto and instruments incorporated therein.

18.16 Sections. References to section numbers are to sections in this Lease, unless otherwise expressly stated.Gender, Singular/Plural. Words of any gender used in this Lease shall be held and construed to include any other gender, and words in the singular number shall be held to include the plural, unless the context otherwise requires.Headings and Captions. Headings and

captions of sections and paragraphs are for convenience, not limitation, and are not to be construed as modifying text.

18.19 Further Assurances. Developer and the City covenant that they shall do, execute, acknowledge and deliver or cause to be done, executed, acknowledged and delivered such instrument, supplemental hereto and further acts, instruments and transfers as may be required hereunder. All such ancillary agreements shall be in accordance with and not contradictory to the terms and conditions set forth in this Lease.

18.20 Waiver. No provisions of this Agreement shall be deemed to have been waived by either Party unless such waiver is in writing, signed by the Party making the waiver and addressed to the other Party, nor shall any custom or practice which may evolve between the Parties in the administration of the terms of this Agreement be construed to waiver or lessen the right of either Party to insist upon the performance of the other Party in strict accordance with the terms of this Agreement. Further, the waiver by any Party of a breach by the other Party or any term, covenant, or condition hereof shall not operate as a waiver of any subsequent breach of the same or any other term, covenant, or condition thereof. No acceptance by the City of any partial payment shall constitute an accord or satisfaction but shall only be deemed a partial payment.

18.21 Modifications; City Approval. Any amendment, alteration, change or modification of or to this Lease, in order to become effective, shall be made in writing and in each instance signed on behalf of each Party and, if applicable, approved by the Governing Body and in accordance with any applicable City signature policy. The MRA Director shall record amendments, alterations, changes, and modifications to this Lease in the Official Records, though a failure to so record shall not impair the effectiveness of such as between the Parties. The MRA Director may extend the time for the performance of any term or satisfaction of any condition hereunder for up to 180 days by the execution of a letter countersigned by Developer.

18.22 Legal Advice. Each Party represents to the other that it has carefully read this Lease; and in signing this Lease, it does so with full knowledge of any right which it may have; it has received independent legal advice from its legal counsel as to the matter set forth in this Lease; and it has freely signed this Lease without any reliance upon any agreement, promise, statement or representation by or on behalf of the other Party, or its agents, employees, or attorneys, except as specifically set forth in this Lease, and without duress or coercion, whether economic or otherwise. This Lease shall not be construed more strictly against one Party than against the other merely by virtue of the fact that it may have been prepared primarily by counsel for one of the Parties, it being recognized that both the City and Developer have contributed substantially and materially to the preparation of this Lease.

18.23 Non-Liability of Officials and Employees of the City. No member, official or employee of the City shall be personally liable to Developer, or any successor in interest, in the event of any default or breach by the City or for any amount which may become due to Developer or its successors, or on any obligations under the terms of this Lease.

18.24 New Mexico Tort Claims Act. The City's liability in connection with the Lease is limited by the immunities and limitations of the New Mexico Tort Claims Act, Section 41-4-1, et seq. NMSA 1978, as amended. The City and its "public employees", as defined in the New Mexico

Tort Claims Act, do not waive sovereign immunity, do not waive any defense, and do not waive any limitation of liability pursuant to law. No provision of this Lease modifies or waives any provision of the New Mexico Tort Claims Act.

18.25 Governing Law. This Lease shall be governed by and construed in accordance with the laws of the State of New Mexico.

18.26 Legal Proceedings; Attorneys' Fees and Costs. The Parties agree that the exclusive venue for any claims, disputes, disagreements, controversies, lawsuits, or causes of action by or between Developer and the City arising out of or relating to this Lease, the Project, the Property, or the construction activities permitted under the DDA (collectively, "**Disputes**"), shall be the First Judicial District Court located in Santa Fe, New Mexico. Any and all Disputes shall be tried as a bench trial and not as a jury trial. In the event it becomes necessary for the City to enforce any of the terms and provisions of this Lease, whether or not suit be instituted, Developer shall pay all costs and expenses incurred by the City in connection with the City's enforcement of this Lease, including, but not limited to, reasonable attorneys' fees, unless as a part of such action a court determines that the claims made by City in such action were frivolous and not made in good faith.Waiver of Jury Trial. TO THE EXTENT PERMITTED BY LAW, THE PARTIES HEREBY KNOWINGLY, INTENTIONALLY AND VOLUNTARILY, WITH AND UPON THE ADVICE OF COMPETENT COUNSEL, WAIVE, RELINQUISH AND FOREVER FORGO THE RIGHT TO A TRIAL BY JURY IN ANY ACTION OR PROCEEDING BASED UPON, ARISING OUT OF, OR IN ANY WAY RELATING TO A DISPUTE.EACH PARTY ACKNOWLEDGES AND AGREES THAT ANY DISPUTE WHICH MAY ARISE UNDER THIS AGREEMENT IS LIKELY TO INVOLVE COMPLICATED AND DIFFICULT ISSUES, AND THEREFORE IT HEREBY IRREVOCABLY AND UNCONDITIONALLY WAIVES ANY RIGHT IT MAY HAVE TO A TRIAL BY JURY IN RESPECT OF ANY LITIGATION DIRECTLY OR INDIRECTLY ARISING OUT OF OR RELATING TO ANY DISPUTE. EACH PARTY CERTIFIES AND ACKNOWLEDGES THAT (A) NO REPRESENTATIVE, AGENT OR ATTORNEY OF ANY OTHER PARTY HAS REPRESENTED, EXPRESSLY OR OTHERWISE, THAT SUCH OTHER PARTY WOULD NOT, IN THE EVENT OF LITIGATION, SEEK TO ENFORCE SUCH WAIVERS; (B) IT UNDERSTANDS AND HAS CONSIDERED THE IMPLICATIONS OF SUCH WAIVERS; (C) IT MAKES SUCH WAIVERS VOLUNTARILY; AND (D) IT HAS BEEN INDUCED TO ENTER INTO THIS AGREEMENT BY, AMONG OTHER THINGS, THE MUTUAL WAIVERS AND CERTIFICATIONS IN THIS SECTION 18.27.

18.28 Approval Required. This Lease shall not become effective or binding until approved by the highest approval authority required by the City under this Lease. No Pecuniary Liability of City. No provision of this Lease shall constitute an indebtedness of the City within the meaning of any constitutional provision or statutory limitations of the State of New Mexico, nor constitute or give rise to a pecuniary liability of the City or a charge against its general credit or taxing powers.Officials, Agents and Employees Not Personally Liable. No official, agent, or employee of the City nor member of the Governing Body shall be personally liable to any person by virtue of any provision of this Lease.No Collusion. Developer represents that this Lease is entered into by Developer without collusion on the part of the Developer with any person or firm, without fraud and in good faith. The Developer also represents that no gratuities, in the form of entertainment, gifts or otherwise, were, or during the term of this Lease, will be offered or given

by Developer or any agent or representative of Developer to any officer or employee of the City with a view towards securing this Lease or for securing more favorable treatment with respect to making any determinations with respect to performing this Lease.Public Records. The Parties acknowledge that the City is a government entity and subject to the IPRA. Notwithstanding anything contained herein to the contrary, the City shall not be responsible to Developer or any third-party contractor for any disclosure of confidential information pursuant to the IPRA or pursuant to the City's public records act laws, rules, regulations, instructions or other legal requirement.

18.33 Governmental Right and Powers. Nothing in this Lease will be construed or interpreted as limiting, relinquishing, or waiving any rights of ownership enjoyed by the City in the Property or waiving or limiting the City's control over the management, operations or maintenance of the Property, except as specifically provided in this Lease, or impairing exercising or defining governmental rights and the police powers of the City.

18.34 Survival. All obligations, covenants and agreements contained herein which are intended to be performed in whole or in part after the completion of construction of the Project or termination of this Lease shall survive the completion of construction of the Project or termination of this Lease and shall be binding upon and inure to the benefit of the Parties hereto and their respective successors and permitted assigns.

[*Remainder of this page intentionally left blank*]
[*Signatures and acknowledgements appear on the following pages*]

IN WITNESS WHEREOF, this Lease has been executed and delivered by the City and Developer as of the date shown below.

Date of City of Santa Fe Governing Body
Approval: _____ ___, 20__

CITY:

CITY OF SANTA FE,
a municipal corporation and political subdivision of the State of New Mexico

By: _____

Mayor

APPROVED AS TO FORM:

By: _____
Assistant City Attorney

ATTEST:

By: _____
City Clerk

STATE OF NEW MEXICO }
} ss.
COUNTY OF SANTA FE }

This instrument was acknowledged before me on _____, 20__ by _____, as _____ of City of Santa Fe, a municipal corporation and political subdivision of the State of New Mexico.

(Seal, if any)

_____
(Signature of Notarial Officer)

[*Signatures and acknowledgements continue on the following page*]

DEVELOPER:
ASPECT QOZB, LLC,
a Delaware limited liability company

By: _____
Name: Phillip Gesue
Title: Managing Member

STATE OF NEW MEXICO }
} ss.
COUNTY OF SANTA FE }

This instrument was acknowledged before me on 10/24/, 2024 by Phillip Gesue as Managing Member of Aspect QOZB, LLC, a Delaware limited liability company.

(Seal, if any)

_____
(Signature of Notarial Officer)

STATE OF NEW MEXICO
NOTARY PUBLIC
KANDRA LYNN PAYNE
COMMISSION # 1139277
COMMISSION EXPIRES 12/02/2026

[DEVELOPER SIGNATURE PAGE AND ACKNOWLEDGMENT]

EXHIBIT A

Depiction of the Midtown Site

[see attached]

Lot Line Adjustment to Create Right-of-Way

for PLAT OF EXISTING
College of Santa Fe
within Projected Section 34, T.17N., R.9E., N.M.P.M.
City of Santa Fe
Santa Fe County, New Mexico
August 2024



VICINITY MAP
N.T.S.

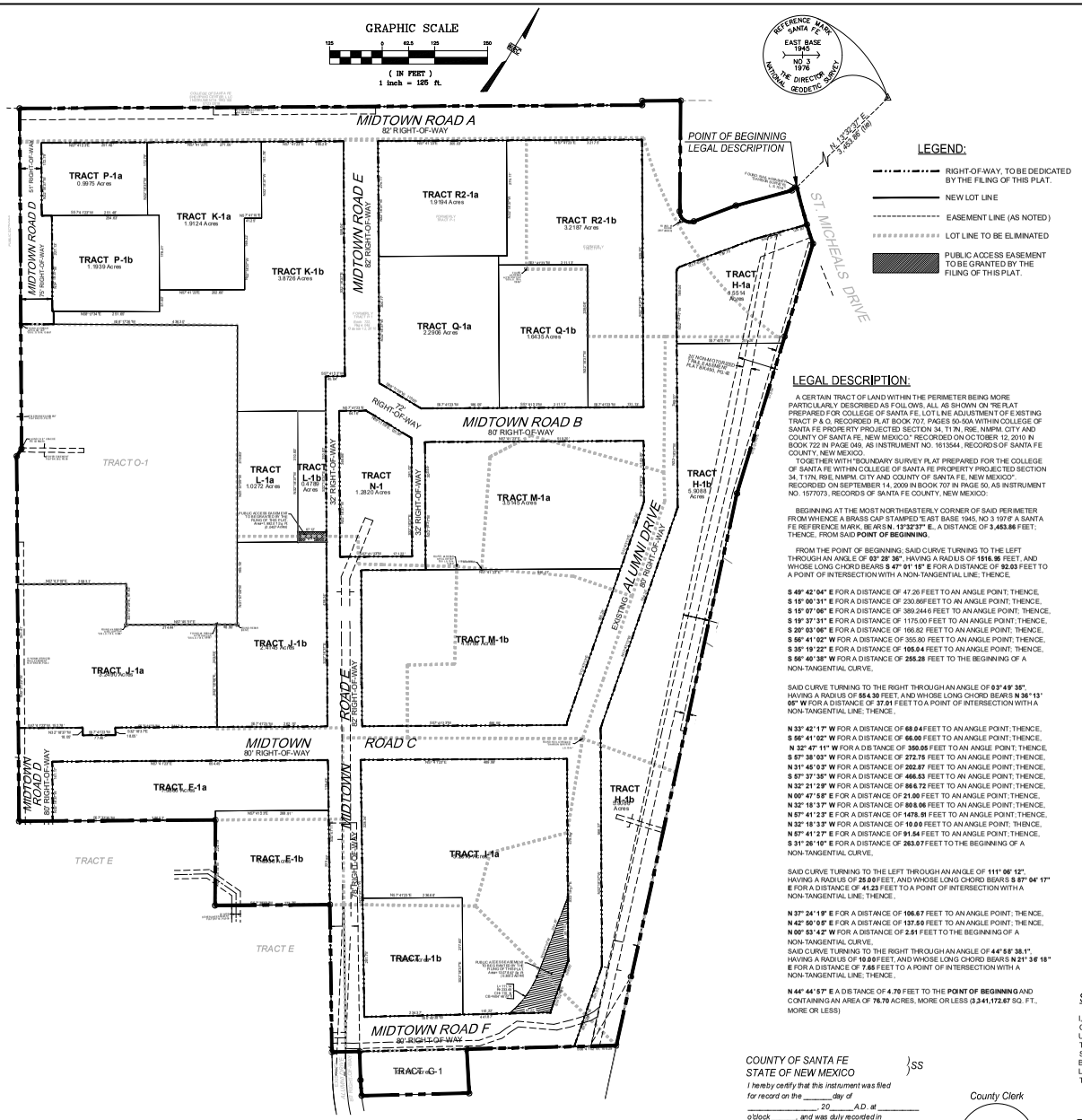

NOTES:

1. FIELD SURVEY WAS PERFORMED NOVEMBER 2021.
2. BEARINGS ARE NEW MEXICO STATE PLANE, CENTRAL ZONE.
   DISTANCES ARE GROUND DISTANCES.
   COMBINED GRID TO GROUND SCALE FACTOR: 1.0004066253 (SCALED AROUND 0,0)
   BASED ON A LINE FROM "SANTA FE EAST BASE RM3" TO "BM B-439, 1984",
   BEARING = S.49°38'22"W.
3. BENCHMARK USED FOR THIS PROJECT IS "SANTA FE EAST BASE RM3".
4. FEDERAL FLOODPLAIN MAP 35049C0411E WITH AN EFFECTIVE DATE OF DECEMBER 4, 2012 AS PUBLISHED BY THE FEDERAL EMERGENCY AGENCY SHOW THIS SITE AS BEING WITHIN ZONE X (DETERMINED TO BE OUTSIDE THE 0.2% ANNUAL CHANCE FLOODPLAIN).
5. THIS PLAT SHOWS ALL AVAILABLE RECORD OF EASEMENTS.
6. THIS PLAT SUBJECT TO RESTRICTIONS, COVENANTS AND EASEMENTS OF RECORD AS SHOWN ON PLATS REFERENCED HEREON.

REFERENCED DOCUMENTS:

THE FOLLOWING DOCUMENTS AND INSTRUMENTS WERE USED FOR THE PERFORMANCE AND PREPARATION OF THIS PLAT:

1. PLAT OF SURVEY ENTITLED, "REPLAT PREPARED FOR THE COLLEGE OF SANTA FE", recorded SEPTEMBER 14, 2006 in PLAT BOOK 707, PAGE 050-051.
2. DIVISION PLAT FOR THE COLLEGE OF SANTA FE, recorded MAY 19, 2006 in PLAT BOOK 682, PAGE 06.
3. REPLAT FOR COLLEGE OF SANTA FE, recorded JANUARY 2, 2006 in PLAT BOOK 672, PAGE 33.
4. REPLAT FOR COLLEGE OF SANTA FE, recorded SEPTEMBER 19, 2006 in PLAT BOOK 635, PAGE 46, 47.
5. REPLAT FOR COLLEGE OF SANTA FE, recorded OCTOBER 12, 2010 in PLAT BOOK 722, PAGE 049.
6. REPLAT FOR COLLEGE OF SANTA FE, recorded OCTOBER 12, 2010 in BOOK 719, PAGE 044.
7. BOUNDARY EASEMENT SURVEY PLAT FOR COLLEGE OF SANTA FE, recorded JULY 15, 2010 in BOOK 719, PAGE 047.
8. PLAT OF ALTA/ACSM LAND TITLE SURVEY, recorded OCTOBER 10, 2008 in BOOK 691, PAGE 029.
9. BOUNDARY SURVEY OF TRACT E "COLLEGE OF SANTA FE", recorded JUNE 28, 2011 in BOOK 735, PAGE 045.
10. BOUNDARY SURVEY OF TRACT E "COLLEGE OF SANTA FE", recorded OCTOBER 28, 2022 in BOOK 896, PAGE 14.
11. PLAT OF EASEMENT SURVEY FOR COLLEGE OF THE CHRISTIAN BROTHERS OF NEW MEXICO, recorded 08/17/ 2009.
12. REPLAT OF TRACT 3A & 3B FOR COLLEGE OF THE BOARD OF EDUCATION OF THE CITY OF SANTA FE, recorded MARCH 12, 1991 in BOOK 220, PAGE 037.
13. BOUNDARY SURVEY PLAT FOR PRESBYTERIAN MEDICAL SERVICES, recorded NOVEMBER 30, 2004 in BOOK 574, PAGE 035.
14. LOT CONSOLIDATION FOR THE STATE OF NEW MEXICO DEPARTMENT OF FINANCE & ADMINISTRATION, recorded OCTOBER 4, 1990 in BOOK 215, PAGE 013.
15. QUITCLAIM DEED from U.S.A. to COLLEGE OF THE CHRISTIAN, filed MAY 23, 1949 in BOOK 40, PAGE 437.
16. DECLARATION from U.S.A. to COLLEGE OF THE CRISTIAN, filed DECEMBER 22, 1969 in BOOK 269, PAGE 855.
17. SPECIAL WARRANTY DEED from COLLEGE OF THE CRISTIAN BROTHERS to CITY OF SANTA FE, filed SEPTEMBER 16, 2009 as INSTRUMENT 1577356.
18. EASEMENT from COLLEGE OF SANTA FE to PNM, filed JULY 9, 1990 in BOOK 682, PAGE 916.
19. EASEMENT from COLLEGE OF SANTA FE to BOARD OF EDUCATION, filed JUNE 10, 1991 in BOOK 730, PAGE 568.
20. EASEMENT from COLLEGE OF SANTA FE to FIRST COMMUNITY BANK, filed SEPTEMBER 21, 2007 as INSTRUMENT 1500540.
21. VACATION OF EASEMENT from COLLEGE OF SANTA FE to FIRST COMMUNITY BANK, filed JULY 20, 2009 as INSTRUMENT 1571651.
22. EASEMENT from COLLEGE OF SANTA FE to PNM, filed AUGUST 13, 1996 in BOOK 1299, PAGE 74.
23. EASEMENT from COLLEGE OF SANTA FE to NEW MEXICO STATE BANK, filed JUNE 12, 2009 as INSTRUMENT 1566667.
24. VACATION OF EASEMENT from COLLEGE OF SANTA FE to FIRST COMMUNITY BANK, filed AUGUST 17, 2009 as INSTRUMENT 1574183.

LEGEND:

- RIGHT-OF-WAY, TO BE DEDICATED BY THE FILING OF THIS PLAT.
- NEW LOT LINE
- EASEMENT LINE (AS NOTED)
- LOT LINE TO BE ELIMINATED
- PUBLIC ACCESS EASEMENT TO BE GRANTED BY THE FILING OF THIS PLAT.

LEGAL DESCRIPTION:

A CERTAIN TRACT OF LAND WITHIN THE PERIMETER BEING MORE PARTICULARLY DESCRIBED AS FOLLOWS, ALL AS SHOWN ON "REPLAT PREPARED FOR COLLEGE OF SANTA FE, LOT LINE ADJUSTMENT OF EXISTING TRACT P & O, RECORDED PLAT BOOK 707, PAGES 50-50A WITHIN COLLEGE OF SANTA FE PROPERTY PROJECTED SECTION 34, T1 7N., R9E, NMPM, CITY AND COUNTY OF SANTA FE, NEW MEXICO." RECORDED ON OCTOBER 12, 2010 IN BOOK 722 IN PAGE 049, AS INSTRUMENT NO. 1613544., RECORDS OF SANTA FE COUNTY, NEW MEXICO.

TOGETHER WITH "BOUNDARY SURVEY PLAT PREPARED FOR THE COLLEGE OF SANTA FE WITHIN COLLEGE OF SANTA FE PROPERTY PROJECTED SECTION 34, T17N, R9E, NMPM, CITY AND COUNTY OF SANTA FE, NEW MEXICO". RECORDED ON SEPTEMBER 14, 2009 IN BOOK 707 IN PAGE 50, AS INSTRUMENT NO. 1577073., RECORDS OF SANTA FE COUNTY, NEW MEXICO:

BEGINNING AT THE MOST NORTHEASTERLY CORNER OF SAID PERIMETER FROM WHENCE A BRASS CAP STAMPED "EAST BASE 1945, NO 3 1976" A SANTA FE REFERENCE MARK, BEARS **N. 13°32'37" E.**, A DISTANCE OF **3,483.86** FEET; THENCE, FROM SAID **POINT OF BEGINNING**,

FROM THE POINT OF BEGINNING; SAID CURVE TURNING TO THE LEFT THROUGH AN ANGLE OF **03° 28' 36"**, HAVING A RADIUS OF **1516.95** FEET, AND WHOSE LONG CHORD BEARS **S 47° 01' 15" E** FOR A DISTANCE OF **92.03** FEET TO A POINT OF INTERSECTION WITH A NON-TANGENTIAL LINE; THENCE,

S 49° 42' 04" E FOR A DISTANCE OF 47.26 FEET TO AN ANGLE POINT; THENCE,
S 15° 00' 31" E FOR A DISTANCE OF 230.86FEET TO AN ANGLE POINT; THENCE,
S 15° 07' 06" E FOR A DISTANCE OF 389.24 6 FEET TO AN ANGLE POINT; THENCE,
S 19° 37' 31" E FOR A DISTANCE OF 1175.00 FEET TO AN ANGLE POINT; THENCE,
S 20° 03' 06" E FOR A DISTANCE OF 166.82 FEET TO AN ANGLE POINT; THENCE,
S 56° 41' 02" W FOR A DISTANCE OF 355.80 FEET TO AN ANGLE POINT; THENCE,
S 35° 19' 22" E FOR A DISTANCE OF **105.04** FEET TO AN ANGLE POINT; THENCE,
S 56° 40' 38" W FOR A DISTANCE OF **255.28** FEET TO THE BEGINNING OF A NON-TANGENTIAL CURVE,

SAID CURVE TURNING TO THE RIGHT THROUGH AN ANGLE OF **03° 49' 35"**, HAVING A RADIUS OF **554.30** FEET, AND WHOSE LONG CHORD BEARS **N 36° 13' 05" W** FOR A DISTANCE OF **37.01** FEET TO A POINT OF INTERSECTION WITH A NON-TANGENTIAL LINE; THENCE ,

N 33° 42' 17" W FOR A DISTANCE OF **68.04** FEET TO AN ANGLE POINT; THENCE,
S 56° 41' 02" W FOR A DISTANCE OF **66.00** FEET TO AN ANGLE POINT; THENCE,
N 32° 47' 11" W FOR A DISTANCE OF **350.05** FEET TO AN ANGLE POINT; THENCE,
S 57° 38' 03" W FOR A DISTANCE OF **272.75** FEET TO AN ANGLE POINT; THENCE,
N 31° 46' 37" W FOR A DISTANCE OF **202.87** FEET TO AN ANGLE POINT; THENCE,
S 57° 37' 35" W FOR A DISTANCE OF **466.53** FEET TO AN ANGLE POINT; THENCE,
N 32° 21' 29" W FOR A DISTANCE OF **866.72** FEET TO AN ANGLE POINT; THENCE,
N 00° 47' 58" E FOR A DISTANCE OF **21.00** FEET TO AN ANGLE POINT; THENCE,
N 32° 18' 37" W FOR A DISTANCE OF **868.06** FEET TO AN ANGLE POINT; THENCE,
N 57° 41' 23" E FOR A DISTANCE OF **1478.51** FEET TO AN ANGLE POINT; THENCE,
N 32° 18' 33" W FOR A DISTANCE OF **10.00** FEET TO AN ANGLE POINT; THENCE,
N 57° 41' 27" E FOR A DISTANCE OF **91.54** FEET TO AN ANGLE POINT; THENCE,
S 31° 26' 16" E FOR A DISTANCE OF **263.07** FEET TO THE BEGINNING OF A NON-TANGENTIAL CURVE,

SAID CURVE TURNING TO THE LEFT THROUGH AN ANGLE OF **111° 06' 12"**, HAVING A RADIUS OF **25.00** FEET, AND WHOSE LONG CHORD BEARS **S 87° 04' 17" E** FOR A DISTANCE OF **41.23** FEET TO A POINT OF INTERSECTION WITH A NON-TANGENTIAL LINE; THENCE ,

N 37° 24' 19" E FOR A DISTANCE OF **106.67** FEET TO AN ANGLE POINT; THENCE,
N 42° 50' 05" E FOR A DISTANCE OF **137.50** FEET TO AN ANGLE POINT; THENCE,
N 00° 53' 42" W FOR A DISTANCE OF **2.51** FEET TO THE BEGINNING OF A NON-TANGENTIAL CURVE,
SAID CURVE TURNING TO THE RIGHT THROUGH AN ANGLE OF **44° 58' 38.1"**, HAVING A RADIUS OF **10.00** FEET, AND WHOSE LONG CHORD BEARS **N 21° 36' 18" E** FOR A DISTANCE OF **7.55** FEET TO A POINT OF INTERSECTION WITH A NON-TANGENTIAL LINE; THENCE ,

N 44° 44' 57" E A DISTANCE OF **4.70** FEET TO THE **POINT OF BEGINNING** AND CONTAINING AN AREA OF **76.70** ACRES, MORE OR LESS (**3,341,172.67** SQ. FT., MORE OR LESS)

STATEMENT OF DECLARATION:

THE PURPOSE OF THIS PLAT IS TO:

ADJUST LOT LINES AND TO DEDICATE RIGHT-OF-WAY, AS SHOWN HEREON.

AFFIDAVIT:

KNOW ALL MEN BY THESE PRESENTS THAT THE UNDERSIGNED OWNER HAS CAUSED TO BE REPLATTED THOSE LANDS SHOWN HEREON. THE SAID REPLAT IS MADE WITH THE FREE CONSENT AND IN ACCORDANCE WITH THE DESIRES OF THE SAID OWNER. THIS REPLAT CONTAINS 4.88 ACRES, MORE OR LESS. ALL TRACTS SHOWN HEREON ARE SUBJECT TO RECIPROCAL PRIVATE ACCESS AND PARKING EASEMENTS ALONG AND OVER EXISTING DRIVEWAYS AND PARKING AREAS. EASEMENTS ARE GRANTED FOR EXISTING UTILITIES. THERE IS NO ROAD DEDICATION.
THIS REPLAT LIES WITHIN THE PLANNING AND PLATTING JURISDICTION OF THE CITY OF SANTA FE, N.M.

OWNER: _____

BY: _____ ALAN WEBBER, MAYOR DATE: _____

CITY CLERK: _____ DATE: _____

STATE OF NEW MEXICO
COUNTY OF SANTA FE
THE FOREGOING INSTRUMENT WAS SWORN, ACKNOWLEDGED AND SUBSCRIBED BEFORE ME ON THIS _____ DAY OF _____ , 20____ .

NOTARY PUBLIC _____ MY COMMISSION EXPIRES _____

REVIEWED BY COUNTY OF SANTA FE:

COUNTY TREASURER _____ DATE: _____

REVIEWED BY CITY OF SANTA FE:

CITY ENGINEER FOR LAND USE _____ DATE: _____

CITY PLANNER _____ DATE: _____

SURVEYOR'S CERTIFICATION:

I, BENJAMIN M. ARAGON, NEW MEXICO PROFESSIONAL SURVEYOR No. 15268, DO HEREBY CERTIFY THAT THIS BOUNDARY SURVEY PLAT AND THE ACTUAL SURVEY ON THE GROUND UPON WHICH IT IS BASED WERE PERFORMED BY ME OR UNDER MY DIRECT SUPERVISION; THAT I AM RESPONSIBLE FOR THIS SURVEY; THAT THIS SURVEY MEETS THE MINIMUM STANDARDS FOR SURVEYING IN NEW MEXICO; AND THAT IT IS TRUE AND CORRECT TO THE BEST OF MY KNOWLEDGE AND BELIEF. I FURTHER CERTIFY THAT THIS SURVEY IS NOT A LAND DIVISION OR SUBDIVISION AS DEFINED IN THE NEW MEXICO SUBDIVISION ACT AND THAT THIS INSTRUMENT IS A BOUNDARY SURVEY PLAT OF AN EXISTING TRACT OR TRACTS.

BENJAMIN M. ARAGON N.M.P.L.S. #15268

DATE

BENJAMIN M. ARAGON NEW MEXICO 15268 REGISTERED PROFESSIONAL SURVEYOR

WILSON & COMPANY
4401 MASTHEAD ST. NE, SUITE 150
ALBUQUERQUE, NEW MEXICO 87109
OFFICE: 505-348-4000
FAX: 505-348-4155
www.wilsonco.com

SHEET 1 OF 1

COUNTY OF SANTA FE
STATE OF NEW MEXICO } SS

I hereby certify that this instrument was filed for record on the _____ day of _____ 20____ A.D. at _____ o'clock _____, and was duly recorded in book _____ page(s) _____ of the records of Santa Fe County.

Witness my Hand and Seal of office
KATHARINE E. CLARK
County Clerk, Santa Fe county, N.M.

_____ Deputy

County Clerk Seal

EXHIBIT A

EXHIBIT B

Depiction of the Property

[see attached]

Lot Split to create
TRACTS F-1a and F-1b
LOT LINE ADJUSTMENT PLAT OF EXISTING
TRACT F and TRACT J
within Projected Section 34, T.17N., R.9E., N.M.P.M.
City of Santa Fe
Santa Fe County, New Mexico
August 2024

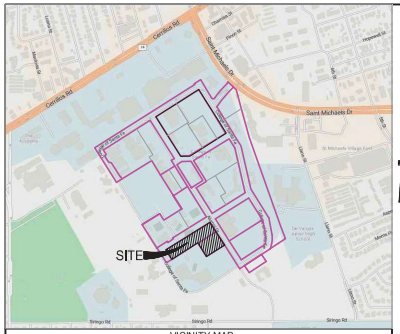

VICINITY MAP
N.T.S.

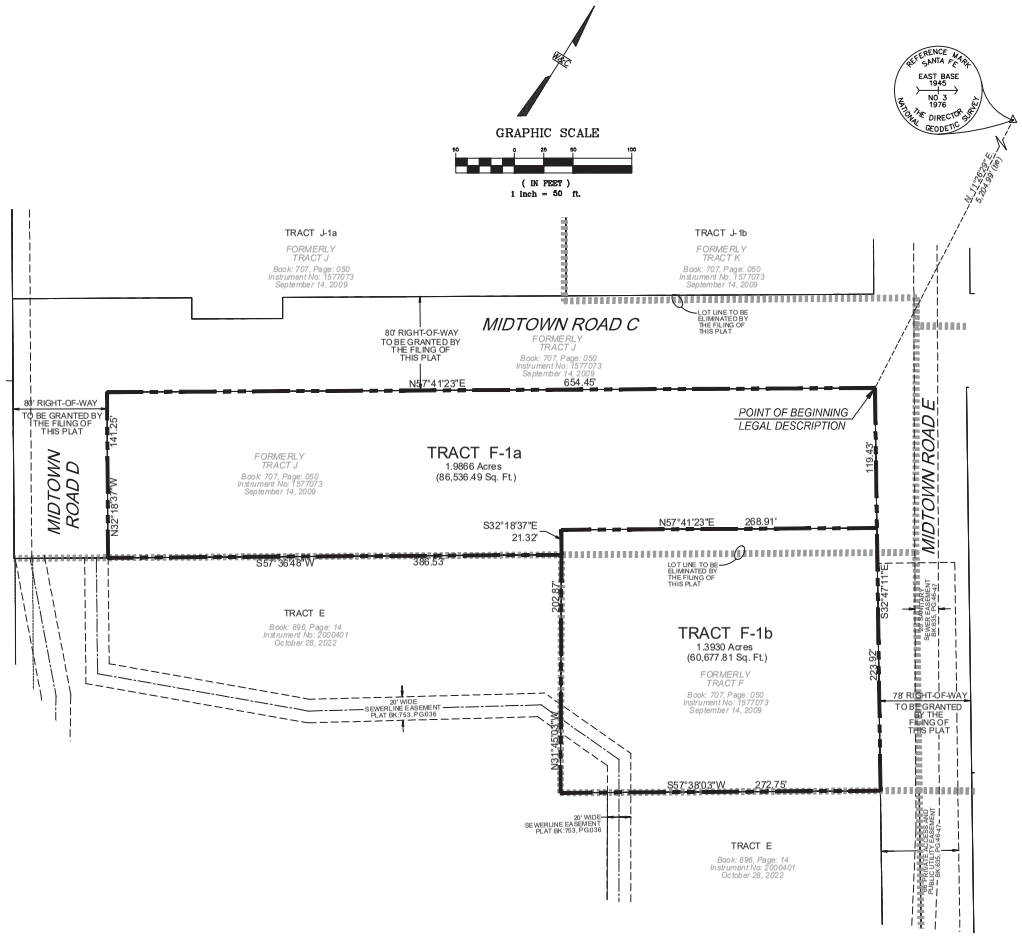

NOTES:

1. FIELD SURVEY WAS PERFORMED NOVEMBER 2021.
2. BEARINGS ARE NEW MEXICO STATE PLANE, CENTRAL ZONE. DISTANCES ARE GROUND DISTANCES. COMBINED GRID TO GROUND SCALE FACTOR: 1.0004066253 (SCALED AROUND 0,0) BASED ON A LINE FROM "SANTA FE EAST BASE RM3" TO "BM B-439, 1984", BEARING = S.49°38'22"W.
3. BENCHMARK USED FOR THIS PROJECT IS "SANTA FE EAST BASE RM3".
4. FEDERAL FLOODPLAIN MAP 35049C0411E WITH AN EFFECTIVE DATE OF DECEMBER 4, 2012 AS PUBLISHED BY THE FEDERAL EMERGENCY AGENCY SHOW THIS SITE AS BEING WITHIN ZONE X (DETERMINED TO BE OUTSIDE THE 0.2% ANNUAL CHANCE FLOODPLAIN).
5. THIS PLAT SHOWS ALL AVAILABLE RECORD OF EASEMENTS.
6. THIS PLAT SUBJECT TO RESTRICTIONS, COVENANTS AND EASEMENTS OF RECORD AS SHOWN ON PLATS REFERENCED HEREON.

REFERENCED DOCUMENTS:

THE FOLLOWING DOCUMENTS AND INSTRUMENTS WERE USED FOR THE PERFORMANCE AND PREPARATION OF THIS PLAT:

1. PLAT OF SURVEY ENTITLED, "REPLAT PREPARED FOR THE COLLEGE OF SANTA FE", recorded SEPTEMBER 14, 2006 in PLAT BOOK 707, PAGE 050-051.
2. DIVISION PLAT FOR THE COLLEGE OF SANTA FE, recorded MAY 19, 2006 in PLAT BOOK 682, PAGE 06.
3. REPLAT FOR COLLEGE OF SANTA FE, recorded JANUARY 2, 2006 in PLAT BOOK 672, PAGE 33.
4. REPLAT FOR COLLEGE OF SANTA FE, recorded SEPTEMBER 19, 2006 in PLAT BOOK 635, PAGE 46, 47.
5. REPLAT FOR COLLEGE OF SANTA FE, recorded OCTOBER 12, 2010 in PLAT BOOK 722, PAGE 049.
6. REPLAT FOR COLLEGE OF SANTA FE, recorded OCTOBER 12, 2010 in BOOK 719, PAGE 044.
7. BOUNDARY EASEMENT SURVEY PLAT FOR COLLEGE OF SANTA FE, recorded JULY 15, 2010 in BOOK 719, PAGE 047.
8. PLAT OF ALTA/ACSM LAND TITLE SURVEY, recorded OCTOBER 10, 2008 in BOOK 691, PAGE 029.
9. BOUNDARY SURVEY OF TRACT E "COLLEGE OF SANTA FE", recorded JUNE 28, 2011 in BOOK 735, PAGE 045.
10. BOUNDARY SURVEY OF TRACT E "COLLEGE OF SANTA FE", recorded OCTOBER 28, 2022 in BOOK 896, PAGE 14.
11. PLAT OF EASEMENT SURVEY FOR COLLEGE OF THE CHRISTIAN BROTHERS OF NEW MEXICO, recorded 08/17/ 2009.
12. REPLAT OF TRACT 3A & 3B FOR COLLEGE OF THE BOARD OF EDUCATION OF THE CITY OF SANTA FE, recorded MARCH 12, 1991 in BOOK 220, PAGE 037.
13. BOUNDARY SURVEY PLAT FOR PRESBYTERIAN MEDICAL SERVICES, recorded NOVEMBER 30, 2004 in BOOK 574, PAGE 035.
14. LOT CONSOLIDATION FOR THE STATE OF NEW MEXICO DEPARTMENT OF FINANCE & ADMINISTRATION, recorded OCTOBER 4, 1990 in BOOK 215, PAGE 013.
15. QUITCLAIM DEED from U.S.A. to COLLEGE OF THE CHRISTIAN, filed MAY 23, 1949 in BOOK 40, PAGE 437.
16. DECLARATION from U.S.A. to COLLEGE OF THE CRISTIAN, filed DECEMBER 22, 1969 in BOOK 269, PAGE 855.
17. SPECIAL WARRANTY DEED from COLLEGE OF THE CRISTIAN BROTHERS to CITY OF SANTA FE, filed SEPTEMBER 16, 2009 as INSTRUMENT 1577356.
18. EASEMENT from COLLEGE OF SANTA FE to PNM, filed JULY 9, 1990 in BOOK 682, PAGE 916.
19. EASEMENT from COLLEGE OF SANTA FE to BOARD OF EDUCATION, filed JUNE 10, 1991 in BOOK 730, PAGE 568.
20. EASEMENT from COLLEGE OF SANTA FE to FIRST COMMUNITY BANK, filed SEPTEMBER 21, 2007 as INSTRUMENT 1500540.
21. VACATION OF EASEMENT from COLLEGE OF SANTA FE to FIRST COMMUNITY BANK, filed JULY 20, 2009 as INSTRUMENT 1571651.
22. EASEMENT from COLLEGE OF SANTA FE to PNM, filed AUGUST 13, 1996 in BOOK 1299, PAGE 74.
23. EASEMENT from COLLEGE OF SANTA FE to NEW MEXICO STATE BANK, filed JUNE 12, 2009 as INSTRUMENT 1566667.
24. VACATION OF EASEMENT from COLLEGE OF SANTA FE to FIRST COMMUNITY BANK, filed AUGUST 17, 2009 as INSTRUMENT 1574183.

LEGAL DESCRIPTION:

A CERTAIN TRACT OF LAND WITHIN THE PERIMETER BEING MORE PARTICULARLY DESCRIBED AS FOLLOWS, ALL AS SHOWN ON "BOUNDARY SURVEY PLAT PREPARED FOR THE COLLEGE OF SANTA FE WITHIN COLLEGE OF SANTA FE PROPERTY PROJECTED SECTION 34, T17N, R9E, NMPM. CITY AND COUNTY OF SANTA FE, NEW MEXICO", RECORDED ON SEPTEMBER 14, 2009 IN BOOK 707 IN PAGE 50, AS INSTRUMENT NO. 1577073, RECORDS OF SANTA FE COUNTY, NEW MEXICO:

BEGINNING AT THE MOST NORTHERLY CORNER OF SAID PERIMETER FROM WHENCE A BRASS CAP STAMPED "EAST BASE 1945, NO 3 1976" A SANTA FE REFERENCE MARK, BEARS **N. 11°26'29" E.**, A DISTANCE OF **5,204.99** FEET; THENCE, FROM SAID POINT OF BEGINNING,

S. 32°47'11" E., A DISTANCE OF **343.35** FEET TO AN ANGLE POINT; THENCE,

S. 57°38'03" W., A DISTANCE OF **272.75** FEET TO AN ANGLE POINT; THENCE,

N. 31°48'15" W., A DISTANCE OF **224.19** FEET TO AN ANGLE POINT; THENCE,

S. 57°37'35" W., A DISTANCE OF **386.53** FEET TO AN ANGLE POINT; THENCE,

N. 32°18'37" W., A DISTANCE OF **141.17** FEET TO AN ANGLE POINT; THENCE,

N. 57°41'23" E., A DISTANCE OF **654.45** FEET TO THE POINT OF BEGINNING AND CONTAINING AN AREA OF **3.3796** ACRES , MORE OR LESS (**147,214.30** SQ. FT., MORE OR LESS)

LEGEND:

- FOUND: REBAR w/CAP (DESCRIPTION, AS NOTED)
- NEW LOT LINE
- LOT LINE TO BE ELIMINATED
- EASEMENT LINE (AS NOTED)

COUNTY OF SANTA FE }SS
STATE OF NEW MEXICO

I hereby certify that this instrument was filed for record on the _____ day of _____, 20_____ A.D. at _____ o'block _____ and was duly recorded in book _____ page(s) _____ of the records of Santa Fe County.

Witness my Hand and Seal of office
KATHARINE E. CLARK
County Clerk, Santa Fe county, N.M.

_____
Deputy

County Clerk
Seal

STATEMENT OF DECLARATION:

THE PURPOSE OF THIS PLAT IS TO:

REPLAT TRACT F-1a AND F-1b, BY LOT LINE ADJUSTMENT AND/OR LOT SPLIT FROM THE ORIGINAL CONFIGURATION & TO DEDICATE RIGHT-OF-WAY, AS SHOWN HEREON.

AFFIDAVIT:

KNOW ALL MEN BY THESE PRESENTS THAT THE UNDERSIGNED OWNER HAS CAUSED TO BE REPLATTED THOSE LANDS SHOWN HEREON. THE SAID REPLAT IS MADE WITH THE FREE CONSENT AND IN ACCORDANCE WITH THE DESIRES OF THE SAID OWNER. THIS REPLAT CONTAINS 4.88 ACRES, MORE OR LESS. ALL TRACTS SHOWN HEREON ARE SUBJECT TO RECIPROCAL PRIVATE ACCESS AND PARKING EASEMENTS ALONG AND OVER EXISTING DRIVEWAYS AND PARKING AREAS. EASEMENTS ARE GRANTED FOR EXISTING UTILITIES. THERE IS NO ROAD DEDICATION.
THIS REPLAT LIES WITHIN THE PLANNING AND PLATTING JURISDICTION OF THE CITY OF SANTA FE, N.M.

OWNER: _____

_____
BY: ALAN WEBBER, MAYOR DATE:

_____
CITY CLERK: DATE:

STATE OF NEW MEXICO
COUNTY OF SANTA FE
THE FOREGOING INSTRUMENT WAS SWORN, ACKNOWLEDGED AND SUBSCRIBED BEFORE ME ON THIS _____ DAY OF _____, 20____.

_____
NOTARY PUBLIC MY COMMISSION EXPIRES

REVIEWED BY COUNTY OF SANTA FE:

_____
COUNTY TREASURER DATE:

REVIEWED BY CITY OF SANTA FE:

_____
CITY ENGINEER FOR LAND USE DATE:

_____
CITY PLANNER DATE:

SURVEYOR'S CERTIFICATION:

I, BENJAMIN M. ARAGON, NEW MEXICO PROFESSIONAL SURVEYOR No. 15268, DO HEREBY CERTIFY THAT THIS BOUNDARY SURVEY PLAT AND THE ACTUAL SURVEY ON THE GROUND UPON WHICH IT IS BASED WERE PERFORMED BY ME OR UNDER MY DIRECT SUPERVISION; THAT I AM RESPONSIBLE FOR THIS SURVEY; THAT THIS SURVEY MEETS THE MINIMUM STANDARDS FOR SURVEYING IN NEW MEXICO; AND THAT IT IS TRUE AND CORRECT TO THE BEST OF MY KNOWLEDGE AND BELIEF. I FURTHER CERTIFY THAT THIS SURVEY IS NOT A LAND DIVISION OR SUBDIVISION AS DEFINED IN THE NEW MEXICO SUBDIVISION ACT AND THAT THIS INSTRUMENT IS A BOUNDARY SURVEY PLAT OF AN EXISTING TRACT OR TRACTS.

_____
BENJAMIN M. ARAGON N.M.P.L.S. #15268

_____
DATE

BENJAMIN M. ARAGON NEW MEXICO 15268 REGISTERED PROFESSIONAL SURVEYOR

WILSON & COMPANY
4401 MASTHEAD ST. NE, SUITE 150
ALBUQUERQUE, NEW MEXICO 87109
OFFICE: 505-348-4000
FAX: 505-348-4155
www.wilsonco.com

SHEET 1 OF 1

EXHIBIT B

Lot Split to create
TRACTS L-1a and L-1b
LOT LINE ADJUSTMENT PLAT OF EXISTING TRACT P-1
within Projected Section 34, T.17N., R.9E., N.M.P.M.
City of Santa Fe
Santa Fe County, New Mexico
August 2024



VICINITY MAP
N.T.S.

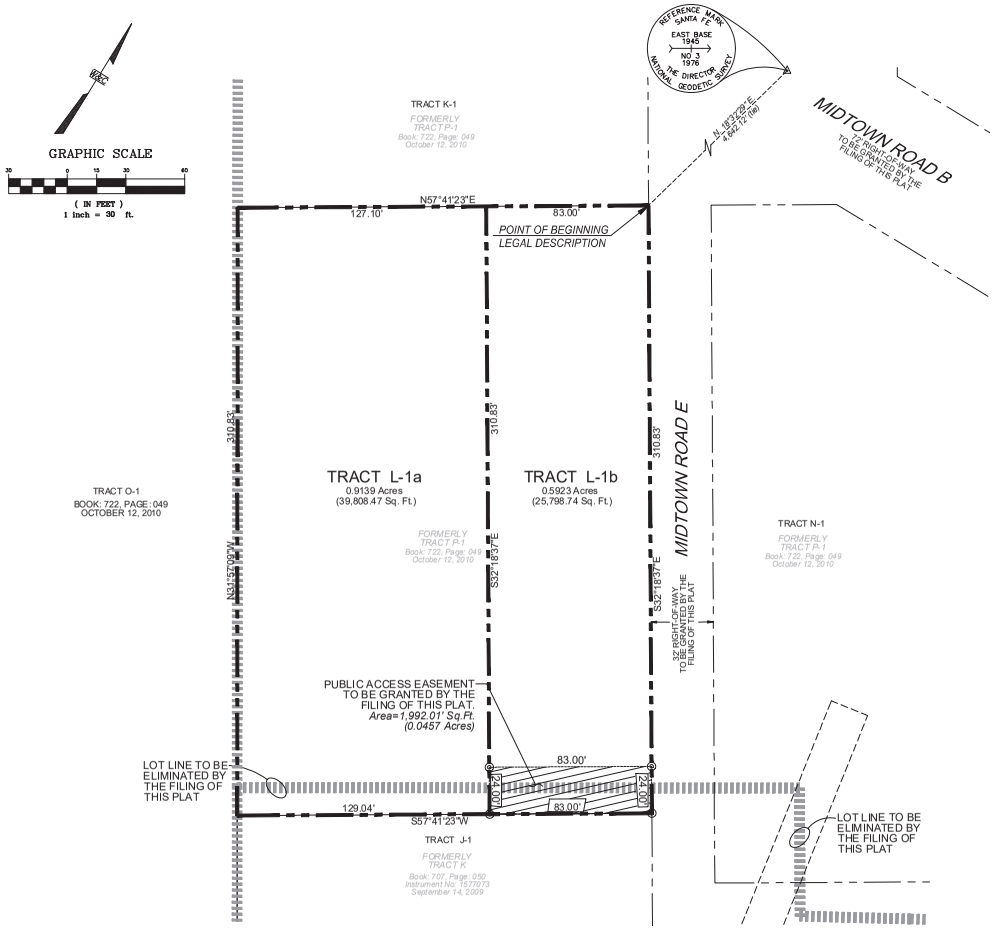

NOTES:

1. FIELD SURVEY WAS PERFORMED NOVEMBER 2021.
2. BEARINGS ARE NEW MEXICO STATE PLANE, CENTRAL ZONE. DISTANCES ARE GROUND DISTANCES. COMBINED GRID TO GROUND SCALE FACTOR: 1.0004066253 (SCALED AROUND 0,0) BASED ON A LINE FROM "SANTA FE EAST BASE RM3" TO "BM B-439, 1984", BEARING = S.49°38'22"W.
3. BENCHMARK USED FOR THIS PROJECT IS "SANTA FE EAST BASE RM3".
4. FEDERAL FLOODPLAIN MAP 35049C0411E WITH AN EFFECTIVE DATE OF DECEMBER 4, 2012 AS PUBLISHED BY THE FEDERAL EMERGENCY AGENCY SHOW THIS SITE AS BEING WITHIN ZONE X (DETERMINED TO BE OUTSIDE THE 0.2% ANNUAL CHANCE FLOODPLAIN).
5. THIS PLAT SHOWS ALL AVAILABLE RECORD OF EASEMENTS.
6. THIS PLAT SUBJECT TO RESTRICTIONS, COVENANTS AND EASEMENTS OF RECORD AS SHOWN ON PLATS REFERENCED HEREON.

REFERENCED DOCUMENTS:

THE FOLLOWING DOCUMENTS AND INSTRUMENTS WERE USED FOR THE PERFORMANCE AND PREPARATION OF THIS PLAT:

1. PLAT OF SURVEY ENTITLED, "REPLAT PREPARED FOR THE COLLEGE OF SANTA FE", recorded SEPTEMBER 14, 2006 in PLAT BOOK 707, PAGE 050-051.
2. DIVISION PLAT FOR THE COLLEGE OF SANTA FE, recorded MAY 19, 2006 in PLAT BOOK 682, PAGE 06.
3. REPLAT FOR COLLEGE OF SANTA FE, recorded JANUARY 2, 2006 in PLAT BOOK 672, PAGE 33.
4. REPLAT FOR COLLEGE OF SANTA FE, recorded SEPTEMBER 19, 2006 in PLAT BOOK 635, PAGE 46, 47.
5. REPLAT FOR COLLEGE OF SANTA FE, recorded OCTOBER 12, 2010 in PLAT BOOK 722, PAGE 049.
6. REPLAT FOR COLLEGE OF SANTA FE, recorded OCTOBER 12, 2010 in BOOK 719, PAGE 044.
7. BOUNDARY EASEMENT SURVEY PLAT FOR COLLEGE OF SANTA FE, recorded JULY 15, 2010 in BOOK 719, PAGE 047.
8. PLAT OF ALTA/ACSM LAND TITLE SURVEY, recorded OCTOBER 10, 2008 in BOOK 691, PAGE 029.
9. BOUNDARY SURVEY OF TRACT E "COLLEGE OF SANTA FE", recorded JUNE 28, 2011 in BOOK 735, PAGE 045.
10. BOUNDARY SURVEY OF TRACT E "COLLEGE OF SANTA FE", recorded OCTOBER 28, 2022 in BOOK 896, PAGE 14.
11. PLAT OF EASEMENT SURVEY FOR COLLEGE OF THE CHRISTIAN BROTHERS OF NEW MEXICO, recorded 08/17/2009.
12. REPLAT OF TRACT 3A & 3B FOR COLLEGE OF THE BOARD OF EDUCATION OF THE CITY OF SANTA FE, recorded MARCH 12, 1991 in BOOK 220, PAGE 037.
13. BOUNDARY SURVEY PLAT FOR PRESBYTERIAN MEDICAL SERVICES, recorded NOVEMBER 30, 2004 in BOOK 574, PAGE 035.
14. LOT CONSOLIDATION FOR THE STATE OF NEW MEXICO DEPARTMENT OF FINANCE & ADMINISTRATION, recorded OCTOBER 4, 1990 in BOOK 215, PAGE 013.
15. QUITCLAIM DEED from U.S.A. to COLLEGE OF THE CHRISTIAN, filed MAY 23, 1949 in BOOK 40, PAGE 437.
16. DECLARATION from U.S.A. to COLLEGE OF THE CRISTIAN, filed DECEMBER 22, 1969 in BOOK 269, PAGE 855.
17. SPECIAL WARRANTY DEED from COLLEGE OF THE CRISTIAN BROTHERS to CITY OF SANTA FE, filed SEPTEMBER 16, 2009 as INSTRUMENT 1577356.
18. EASEMENT from COLLEGE OF SANTA FE to PNM, filed JULY 9, 1990 in BOOK 682, PAGE 916.
19. EASEMENT from COLLEGE OF SANTA FE to BOARD OF EDUCATION, filed JUNE 10, 1991 in BOOK 730, PAGE 568.
20. EASEMENT from COLLEGE OF SANTA FE to FIRST COMMUNITY BANK, filed SEPTEMBER 21, 2007 as INSTRUMENT 1500540.
21. VACATION OF EASEMENT from COLLEGE OF SANTA FE to FIRST COMMUNITY BANK, filed JULY 20, 2009 as INSTRUMENT 1571651.
22. EASEMENT from COLLEGE OF SANTA FE to PNM, filed AUGUST 13, 1996 in BOOK 1299, PAGE 74.
23. EASEMENT from COLLEGE OF SANTA FE to NEW MEXICO STATE BANK , filed JUNE 12, 2009 as INSTRUMENT 1566667.
24. VACATION OF EASEMENT from COLLEGE OF SANTA FE to FIRST COMMUNITY BANK, filed AUGUST 17, 2009 as INSTRUMENT 1574183.

LEGAL DESCRIPTION:

A CERTAIN TRACT OF LAND WITHIN THE PERIMETER BEING MORE PARTICULARLY DESCRIBED AS FOLLOWS, ALL AS SHOWN ON "REPLAT PREPARED FOR COLLEGE OF SANTA FE, LOT LINE ADJUSTMENT OF EXISTING TRACT P & O, RECORDED PLAT BOOK 707, PAGES 50-50A WITHIN COLLEGE OF SANTA FE PROPERTY PROJECTED SECTION 34, T 17N, R9E, NMPM, CITY AND COUNTY OF SANTA FE, NEW MEXICO." RECORDED ON OCTOBER 12, 2010 IN BOOK 722 IN PAGE 049, AS INSTRUMENT NO. 1613544, RECORDS OF SANTA FE COUNTY, NEW MEXICO:

BEGINNING AT THE MOST NORTHERLY CORNER OF SAID PERIMETER FROM WHENCE A BRASS CAP STAMPED "EAST BASE 1945, NO 3 1976" A SANTA FE REFERENCE MARK, BEARS **N. 18°32'29" E.**, A DISTANCE OF **4,642.12** FEET; THENCE, FROM SAID POINT OF BEGINNING,

S. 32°18'37" E., A DISTANCE OF **310.83** FEET TO AN ANGLE POINT; THENCE,

S. 57°41'23" W., A DISTANCE OF **212.04** FEET TO AN ANGLE POINT; THENCE,

N. 31°57'09" W., A DISTANCE OF **310.83** FEET TO AN ANGLE POINT; THENCE,

N. 57°41'23" E., A DISTANCE OF **210.10** FEET TO THE POINT OF BEGINNING AND CONTAINING AN AREA OF **1.5061** ACRES, MORE OR LESS (**65,607.21** SQ. FT., MORE OR LESS)

LEGEND:

- ◆ FOUND: REBAR w/CAP (DESCRIPTION, AS NOTED)
- NEW LOT LINE
- LOT LINE TO BE ELIMINATED
- EASEMENT LINE (AS NOTED)

COUNTY OF SANTA FE }SS
STATE OF NEW MEXICO

I hereby certify that this instrument was filed for record on the _____ day of _____, 20_____ A.D. at _____ o'clock _____, and was duly recorded in book _____ page(s) _____ of the records of Santa Fe County.

Witness my Hand and Seal of office
KATHARINE E. CLARK
County Clerk, Santa Fe county, N.M.

_____
Deputy

County Clerk
Seal

STATEMENT OF DECLARATION:

THE PURPOSE OF THIS PLAT IS TO:

REPLAT TRACT L-1, BY LOT LINE ADJUSTMENT AND/OR LOT SPLIT FROM THE ORIGINAL CONFIGURATION & TO DEDICATE RIGHT-OF-WAY, AS SHOWN HEREON.

AFFIDAVIT:

KNOW ALL MEN BY THESE PRESENTS THAT THE UNDERSIGNED OWNER HAS CAUSED TO BE REPLATTED THOSE LANDS SHOWN HEREON. THE SAID REPLAT IS MADE WITH THE FREE CONSENT AND IN ACCORDANCE WITH THE DESIRES OF THE SAID OWNER. THIS REPLAT CONTAINS 4.88 ACRES, MORE OR LESS. ALL TRACTS SHOWN HEREON ARE SUBJECT TO RECIPROCAL PRIVATE ACCESS AND PARKING EASEMENTS ALONG AND OVER EXISTING DRIVEWAYS AND PARKING AREAS. EASEMENTS ARE GRANTED FOR EXISTING UTILITIES. THERE IS NO ROAD DEDICATION.
THIS REPLAT LIES WITHIN THE PLANNING AND PLATTING JURISDICTION OF THE CITY OF SANTA FE, N.M.

OWNER: _____

_____
BY: ALAN WEBBER, MAYOR DATE:

_____
CITY CLERK: DATE:

STATE OF NEW MEXICO
COUNTY OF SANTA FE
THE FOREGOING INSTRUMENT WAS SWORN, AOKNOWLEDGED AND SUBSCRIBED BEFORE ME ON THIS _____ DAY OF _____, 20____.

_____
NOTARY PUBLIC MY COMMISSION EXPIRES

REVIEWED BY COUNTY OF SANTA FE:

_____
COUNTY TREASURER DATE:

REVIEWED BY CITY OF SANTA FE:

_____
CITY ENGINEER FOR LAND USE DATE:

_____
CITY PLANNER DATE:

SURVEYOR'S CERTIFICATION:

I, BENJAMIN M. ARAGON, NEW MEXICO PROFESSIONAL SURVEYOR No. 15268, DO HEREBY CERTIFY THAT THIS BOUNDARY SURVEY PLAT AND THE ACTUAL SURVEY ON THE GROUND UPON WHICH IT IS BASED WERE PERFORMED BY ME OR UNDER MY DIRECT SUPERVISION, THAT I AM RESPONSIBLE FOR THIS SURVEY; THAT THIS SURVEY MEETS THE MINIMUM STANDARDS FOR SURVEYING IN NEW MEXICO; AND THAT IT IS TRUE AND CORRECT TO THE BEST OF MY KNOWLEDGE AND BELIEF. I FURTHER CERTIFY THAT THIS SURVEY IS NOT A LAND DIVISION OR SUBDIVISION AS DEFINED IN THE NEW MEXICO SUBDIVISION ACT AND THAT THIS INSTRUMENT IS A BOUNDARY SURVEY PLAT OF AN EXISTING TRACT OR TRACTS.

_____
BENJAMIN M. ARAGON N.M.P.L.S. #15268

_____
DATE

BENJAMIN M. ARAGON NEW MEXICO 15268 REGISTERED PROFESSIONAL SURVEYOR

WILSON & COMPANY
4401 MASTHEAD ST. NE, SUITE 150
ALBUQUERQUE, NEW MEXICO 87109
OFFICE: 505-348-4000
FAX: 505-348-4155
www.wilsonco.com

m:\SGR\21-300--194--2022_Disciplines\Survey\Drawings_PLATTING\TRACT L-1\TRACTS L-1a AND L-1b\Lot Split for TRACT L-1a and L-1b.dwg

Lot Split to create
TRACTS I-1a and I-1b

LOT LINE ADJUSTMENT PLAT OF EXISTING
TRACT G, H and TRACT I
within Projected Section 34, T.17N., R.9E., N.M.P.M.
City of Santa Fe
Santa Fe County, New Mexico
August 2024

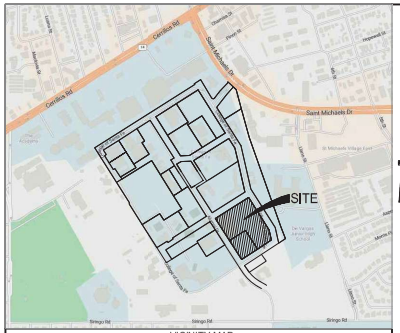

VICINITY MAP
N.T.S.

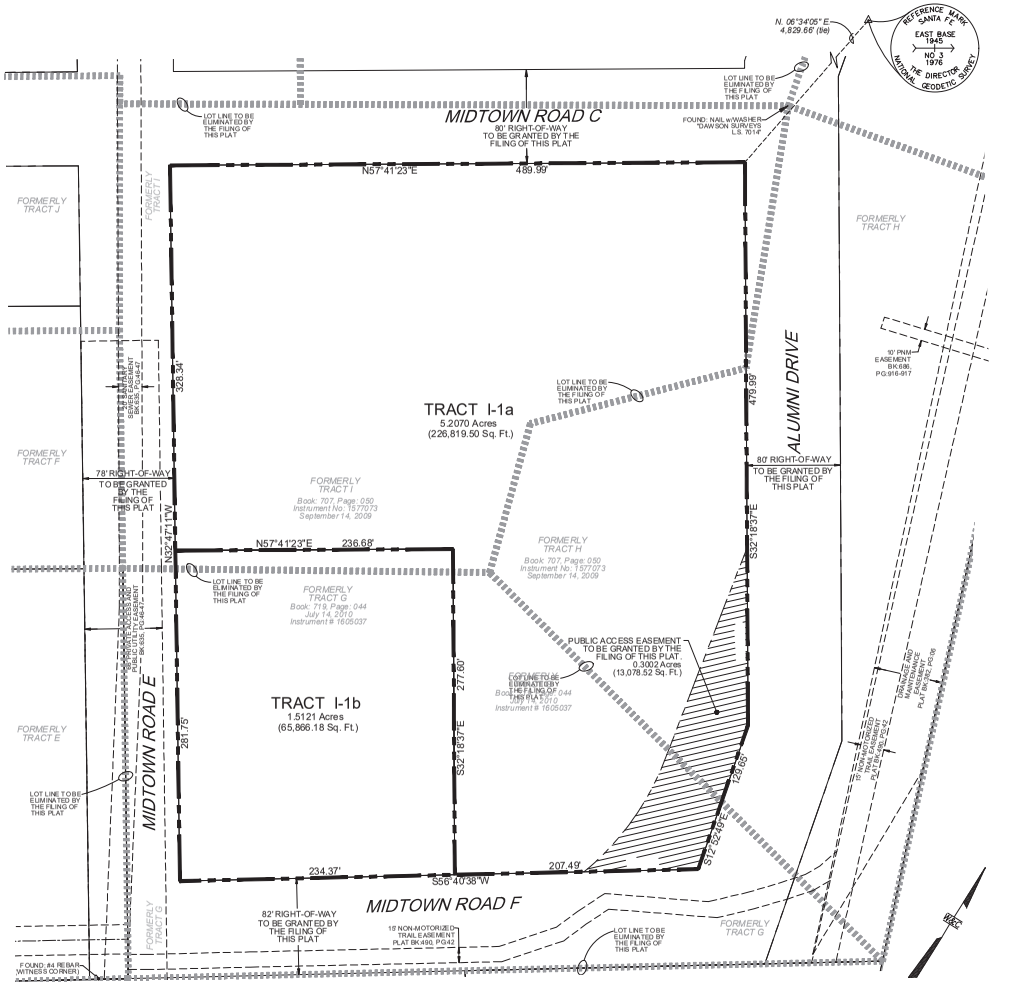

NOTES:

1. FIELD SURVEY WAS PERFORMED NOVEMBER 2021.
2. BEARINGS ARE NEW MEXICO STATE PLANE, CENTRAL ZONE. DISTANCES ARE GROUND DISTANCES. COMBINED GRID TO GROUND SCALE FACTOR: 1.0004066253 (SCALED AROUND 0,0) BASED ON A LINE FROM "SANTA FE EAST BASE RM3" TO "BM B-439, 1984", BEARING = S.49°38'22"W.
3. BENCHMARK USED FOR THIS PROJECT IS "SANTA FE EAST BASE RM3".
4. FEDERAL FLOODPLAIN MAP 35049C0411E WITH AN EFFECTIVE DATE OF DECEMBER 4, 2012 AS PUBLISHED BY THE FEDERAL EMERGENCY AGENCY SHOW THIS SITE AS BEING WITHIN ZONE X (DETERMINED TO BE OUTSIDE THE 0.2% ANNUAL CHANCE FLOODPLAIN).
5. THIS PLAT SHOWS ALL AVAILABLE RECORD OF EASEMENTS.
6. THIS PLAT SUBJECT TO RESTRICTIONS, COVENANTS AND EASEMENTS OF RECORD AS SHOWN ON PLATS REFERENCED HEREON.

REFERENCED DOCUMENTS:

THE FOLLOWING DOCUMENTS AND INSTRUMENTS WERE USED FOR THE PERFORMANCE AND PREPARATION OF THIS PLAT:

1. PLAT OF SURVEY ENTITLED, "REPLAT PREPARED FOR THE COLLEGE OF SANTA FE", recorded SEPTEMBER 14, 2006 in PLAT BOOK 707, PAGE 050-051.
2. DIVISION PLAT FOR THE COLLEGE OF SANTA FE, recorded MAY 19, 2006 in PLAT BOOK 682, PAGE 06.
3. REPLAT FOR COLLEGE OF SANTA FE, recorded JANUARY 2, 2006 in PLAT BOOK 672, PAGE 33.
4. REPLAT FOR COLLEGE OF SANTA FE, recorded SEPTEMBER 19, 2006 in PLAT BOOK 635, PAGE 46, 47.
5. REPLAT FOR COLLEGE OF SANTA FE, recorded OCTOBER 12, 2010 in PLAT BOOK 722, PAGE 049.
6. REPLAT FOR COLLEGE OF SANTA FE, recorded OCTOBER 12, 2010 in BOOK 719, PAGE 044.
7. BOUNDARY EASEMENT SURVEY PLAT FOR COLLEGE OF SANTA FE, recorded JULY 15, 2010 in BOOK 719, PAGE 047.
8. PLAT OF ALTA/ACSM LAND TITLE SURVEY, recorded OCTOBER 10, 2008 in BOOK 691, PAGE 029.
9. BOUNDARY SURVEY OF TRACT E "COLLEGE OF SANTA FE", recorded JUNE 28, 2011 in BOOK 735, PAGE 045.
10. BOUNDARY SURVEY OF TRACT E "COLLEGE OF SANTA FE", recorded OCTOBER 28, 2022 in BOOK 896, PAGE 14.
11. PLAT OF EASEMENT SURVEY FOR COLLEGE OF THE CHRISTIAN BROTHERS OF NEW MEXICO, recorded 08/17/2009.
12. REPLAT OF TRACT 3A & 3B FOR COLLEGE OF THE BOARD OF EDUCATION OF THE CITY OF SANTA FE, recorded MARCH 12, 1991 in BOOK 220, PAGE 037.
13. BOUNDARY SURVEY PLAT FOR PRESBYTERIAN MEDICAL SERVICES, recorded NOVEMBER 30, 2004 in BOOK 574, PAGE 035.
14. LOT CONSOLIDATION FOR THE STATE OF NEW MEXICO DEPARTMENT OF FINANCE & ADMINISTRATION, recorded OCTOBER 4, 1990 in BOOK 215, PAGE 013.
15. QUITCLAIM DEED from U.S.A. to COLLEGE OF THE CHRISTIAN, filed MAY 23, 1949 in BOOK 40, PAGE 437.
16. DECLARATION from U.S.A. to COLLEGE OF THE CRISTIAN, filed DECEMBER 22, 1969 in BOOK 269, PAGE 855.
17. SPECIAL WARRANTY DEED from COLLEGE OF THE CRISTIAN BROTHERS to CITY OF SANTA FE, filed SEPTEMBER 16, 2009 as INSTRUMENT 1577356.
18. EASEMENT from COLLEGE OF SANTA FE to PNM, filed JULY 9, 1990 in BOOK 682, PAGE 916.
19. EASEMENT from COLLEGE OF SANTA FE to BOARD OF EDUCATION, filed JUNE 10, 1991 in BOOK 730, PAGE 568.
20. EASEMENT from COLLEGE OF SANTA FE to FIRST COMMUNITY BANK, filed SEPTEMBER 21, 2007 as INSTRUMENT 1500540.
21. VACATION OF EASEMENT from COLLEGE OF SANTA FE to FIRST COMMUNITY BANK, filed JULY 20, 2009 as INSTRUMENT 1571651.
22. EASEMENT from COLLEGE OF SANTA FE to PNM, filed AUGUST 13, 1996 in BOOK 1299, PAGE 74.
23. EASEMENT from COLLEGE OF SANTA FE to NEW MEXICO STATE BANK , filed JUNE 12, 2009 as INSTRUMENT 1566667.
24. VACATION OF EASEMENT from COLLEGE OF SANTA FE to FIRST COMMUNITY BANK, filed AUGUST 17, 2009 as INSTRUMENT 1574183.

LEGAL DESCRIPTION:

A CERTAIN TRACT OF LAND WITHIN THE PERIMETER BEING MORE PARTICULARLY DESCRIBED AS FOLLOWS, ALL AS SHOWN ON "BOUNDARY SURVEY PLAT PREPARED FOR THE COLLEGE OF SANTA FE WITHIN COLLEGE OF SANTA FE PROPERTY PROJECTED SECTION 34, T17N, R9E, NMPM. CITY AND COUNTY OF SANTA FE, NEW MEXICO". RECORDED ON SEPTEMBER 14, 2009 IN BOOK 707 IN PAGE 50, AS INSTRUMENT NO. 1577073, RECORDS OF SANTA FE COUNTY, NEW MEXICO:

BEGINNING AT THE MOST NORTHERLY CORNER OF SAID PERIMETER FROM WHENCE A BRASS CAP STAMPED "EAST BASE 1945, NO 3 1976" A SANTA FE REFERENCE MARK, BEARS **N. 06°34'05" E.**, A DISTANCE OF **4,829.66** FEET; THENCE, FROM SAID POINT OF BEGINNING,

S. 32°18'37" E., A DISTANCE OF **479.99** FEET TO AN ANGLE POINT; THENCE,

S. 12°52'49" E., A DISTANCE OF **129.65** FEET TO AN ANGLE POINT; THENCE,

S. 56°40'38" W., A DISTANCE OF **441.86** FEET TO AN ANGLE POINT; THENCE,

N. 32°47'11" W., A DISTANCE OF **610.09** FEET TO AN ANGLE POINT; THENCE,

N. 57°41'23" E., A DISTANCE OF **489.99** FEET TO THE POINT OF BEGINNING AND CONTAINING AN AREA OF **6.7191** ACRES , MORE OR LESS (**292,685.68** SQ. FT., MORE OR LESS)

LEGEND:

- ⋄ FOUND: REBAR w/CAP (DESCRIPTION, AS NOTED)
- NEW LOT LINE
- LOT LINE TO BE ELIMINATED
- EASEMENT LINE (AS NOTED)

STATEMENT OF DECLARATION:

THE PURPOSE OF THIS PLAT IS TO:

REPLAT TRACT I-1a AND I-1b, BY LOT LINE ADJUSTMENT AND/OR LOT SPLIT FROM THE ORIGINAL CONFIGURATION & TO DEDICATE RIGHT-OF-WAY, AS SHOWN HEREON.

AFFIDAVIT:

KNOW ALL MEN BY THESE PRESENTS THAT THE UNDERSIGNED OWNER HAS CAUSED TO BE REPLATTED THOSE LANDS SHOWN HEREON. THE SAID REPLAT IS MADE WITH THE FREE CONSENT AND IN ACCORDANCE WITH THE DESIRES OF THE SAID OWNER. THIS REPLAT CONTAINS 4.88 ACRES, MORE OR LESS. ALL TRACTS SHOWN HEREON ARE SUBJECT TO RECIPROCAL PRIVATE ACCESS AND PARKING EASEMENTS ALONG AND OVER EXISTING DRIVEWAYS AND PARKING AREAS. EASEMENTS ARE GRANTED FOR EXISTING UTILITIES. THERE IS NO ROAD DEDICATION.
THIS REPLAT LIES WITHIN THE PLANNING AND PLATTING JURISDICTION OF THE CITY OF SANTA FE, N.M.

OWNER: _____

BY: ALAN WEBBER, MAYOR DATE: _____

CITY CLERK: DATE: _____

STATE OF NEW MEXICO
COUNTY OF SANTA FE
THE FOREGOING INSTRUMENT WAS SWORN, ACKNOWLEDGED AND SUBSCRIBED BEFORE ME ON THIS _____ DAY OF _____, 20____.

NOTARY PUBLIC MY COMMISSION EXPIRES

REVIEWED BY COUNTY OF SANTA FE:

COUNTY TREASURER DATE: _____

REVIEWED BY CITY OF SANTA FE:

CITY ENGINEER FOR LAND USE DATE: _____

CITY PLANNER DATE: _____

COUNTY OF SANTA FE
STATE OF NEW MEXICO } SS

I hereby certify that this instrument was filed for record on the _____ day of _____, 20_____A.D. at _____ o'block _____, and was duly recorded in book _____ page(s) _____ of the records of Santa Fe County.

Witness my Hand and Seal of office
KATHARINE E. CLARK
County Clerk, Santa Fe county, N.M.

_____
Deputy

County Clerk

Seal

SURVEYOR'S CERTIFICATION:

I, BENJAMIN M. ARAGON, NEW MEXICO PROFESSIONAL SURVEYOR No. 15268, DO HEREBY CERTIFY THAT THIS BOUNDARY SURVEY PLAT AND THE ACTUAL SURVEY ON THE GROUND UPON WHICH IT IS BASED WERE PERFORMED BY ME OR UNDER MY DIRECT SUPERVISION; THAT I AM RESPONSIBLE FOR THIS SURVEY; THAT THIS SURVEY MEETS THE MINIMUM STANDARDS FOR SURVEYING IN NEW MEXICO; AND THAT IT IS TRUE AND CORRECT TO THE BEST OF MY KNOWLEDGE AND BELIEF. I FURTHER CERTIFY THAT THIS SURVEY IS NOT A LAND DIVISION OR SUBDIVISION AS DEFINED IN THE NEW MEXICO SUBDIVISION ACT AND THAT THIS INSTRUMENT IS A BOUNDARY SURVEY PLAT OF AN EXISTING TRACT OR TRACTS.

BENJAMIN M. ARAGON N.M.P.L.S. #15268

DATE

NEW MEXICO 15268 BENJAMIN M. ARAGON REGISTERED PROFESSIONAL SURVEYOR

WILSON & COMPANY
4401 MASTHEAD ST. NE, SUITE 150
ALBUQUERQUE, NEW MEXICO 87109
OFFICE: 505-348-4000
FAX: 505-348-4155
www.wilsonco.com

m:\SR21-900-194-002_Disciplines\Survey\Drawings_PLATTING\TRACT I-1\TRACTS I-1a AND I-1b\Lot Split for TRACT I-1a AND I-1b.dwg

Lot Split and Lot Line Adjustment to create TRACT G-1

LOT LINE ADJUSTMENT PLAT OF EXISTING TRACT G
within Projected Section 34, T.17N., R.9E., N.M.P.M.
City of Santa Fe
Santa Fe County, New Mexico
June 2024

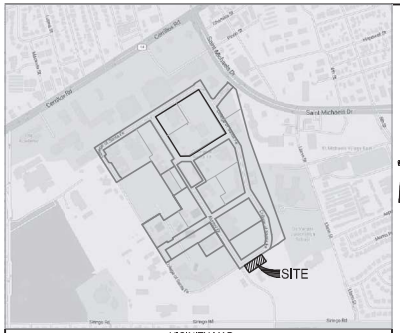

VICINITY MAP
N.T.S.

NOTES:

1. FIELD SURVEY WAS PERFORMED NOVEMBER 2021.
2. BEARINGS ARE NEW MEXICO STATE PLANE, CENTRAL ZONE. DISTANCES ARE GROUND DISTANCES. COMBINED GRID TO GROUND SCALE FACTOR: 1.0004066253 (SCALED AROUND 0,0) BASED ON A LINE FROM "SANTA FE EAST BASE RM3" TO "BM B-439, 1984", BEARING = S.49°38'22"W.
3. BENCHMARK USED FOR THIS PROJECT IS "SANTA FE EAST BASE RM3".
4. FEDERAL FLOODPLAIN MAP 35049C0411E WITH AN EFFECTIVE DATE OF DECEMBER 4, 2012 AS PUBLISHED BY THE FEDERAL EMERGENCY AGENCY SHOW THIS SITE AS BEING WITHIN ZONE X (DETERMINED TO BE OUTSIDE THE 0.2% ANNUAL CHANCE FLOODPLAIN).
5. THIS PLAT SHOWS ALL AVAILABLE RECORD OF EASEMENTS.
6. THIS PLAT SUBJECT TO RESTRICTIONS, COVENANTS AND EASEMENTS OF RECORD AS SHOWN ON PLATS REFERENCED HEREON.

REFERENCED DOCUMENTS:

THE FOLLOWING DOCUMENTS AND INSTRUMENTS WERE USED FOR THE PERFORMANCE AND PREPARATION OF THIS PLAT:

1. PLAT OF SURVEY ENTITLED, "REPLAT PREPARED FOR THE COLLEGE OF SANTA FE", recorded SEPTEMBER 14, 2006 in PLAT BOOK 707, PAGE 050-051.
2. DIVISION PLAT FOR THE COLLEGE OF SANTA FE, recorded MAY 19, 2006 in PLAT BOOK 682, PAGE 06.
3. REPLAT FOR COLLEGE OF SANTA FE, recorded JANUARY 2, 2006 in PLAT BOOK 672, PAGE 33.
4. REPLAT FOR COLLEGE OF SANTA FE, recorded SEPTEMBER 19, 2006 in PLAT BOOK 635, PAGE 46, 47.
5. REPLAT FOR COLLEGE OF SANTA FE, recorded OCTOBER 12, 2010 in PLAT BOOK 722, PAGE 049.
6. REPLAT FOR COLLEGE OF SANTA FE, recorded OCTOBER 12, 2010 in BOOK 719, PAGE 044.
7. BOUNDARY EASEMENT SURVEY PLAT FOR COLLEGE OF SANTA FE, recorded JULY 15, 2010 in BOOK 719, PAGE 047.
8. PLAT OF ALTA/ACSM LAND TITLE SURVEY, recorded OCTOBER 10, 2008 in BOOK 691, PAGE 029.
9. BOUNDARY SURVEY OF TRACT E "COLLEGE OF SANTA FE", recorded JUNE 28, 2011 in BOOK 735, PAGE 045.
10. BOUNDARY SURVEY OF TRACT E "COLLEGE OF SANTA FE", recorded OCTOBER 28, 2022 in BOOK 896, PAGE 14.
11. PLAT OF EASEMENT SURVEY FOR COLLEGE OF THE CHRISTIAN BROTHERS OF NEW MEXICO, recorded 08/17/ 2009.
12. REPLAT OF TRACT 3A & 3B FOR COLLEGE OF THE BOARD OF EDUCATION OF THE CITY OF SANTA FE, recorded MARCH 12, 1991 in BOOK 220, PAGE 037.
13. BOUNDARY SURVEY PLAT FOR PRESBYTERIAN MEDICAL SERVICES, recorded NOVEMBER 30, 2004 in BOOK 574, PAGE 035.
14. LOT CONSOLIDATION FOR THE STATE OF NEW MEXICO DEPARTMENT OF FINANCE & ADMINISTRATION, recorded OCTOBER 4, 1990 in BOOK 215, PAGE 013.
15. QUITCLAIM DEED from U.S.A. to COLLEGE OF THE CHRISTIAN, filed MAY 23, 1949 in BOOK 40, PAGE 437.
16. DECLARATION from U.S.A. to COLLEGE OF THE CRISTIAN, filed DECEMBER 22, 1969 in BOOK 269, PAGE 855.
17. SPECIAL WARRANTY DEED from COLLEGE OF THE CRISTIAN BROTHERS to CITY OF SANTA FE, filed SEPTEMBER 16, 2009 as INSTRUMENT 1577356.
18. EASEMENT from COLLEGE OF SANTA FE to PNM, filed JULY 9, 1990 in BOOK 682, PAGE 916.
19. EASEMENT from COLLEGE OF SANTA FE to BOARD OF EDUCATION, filed JUNE 10, 1991 in BOOK 730, PAGE 568.
20. EASEMENT from COLLEGE OF SANTA FE to FIRST COMMUNITY BANK, filed SEPTEMBER 21, 2007 as INSTRUMENT 1500540.
21. VACATION OF EASEMENT from COLLEGE OF SANTA FE to FIRST COMMUNITY BANK, filed JULY 20, 2009 as INSTRUMENT 1571651.
22. EASEMENT from COLLEGE OF SANTA FE to PNM, filed AUGUST 13, 1996 in BOOK 1299, PAGE 74.
23. EASEMENT from COLLEGE OF SANTA FE to NEW MEXICO STATE BANK , filed JUNE 12, 2009 as INSTRUMENT 1566667.
24. VACATION OF EASEMENT from COLLEGE OF SANTA FE to FIRST COMMUNITY BANK, filed AUGUST 17, 2009 as INSTRUMENT 1574183.

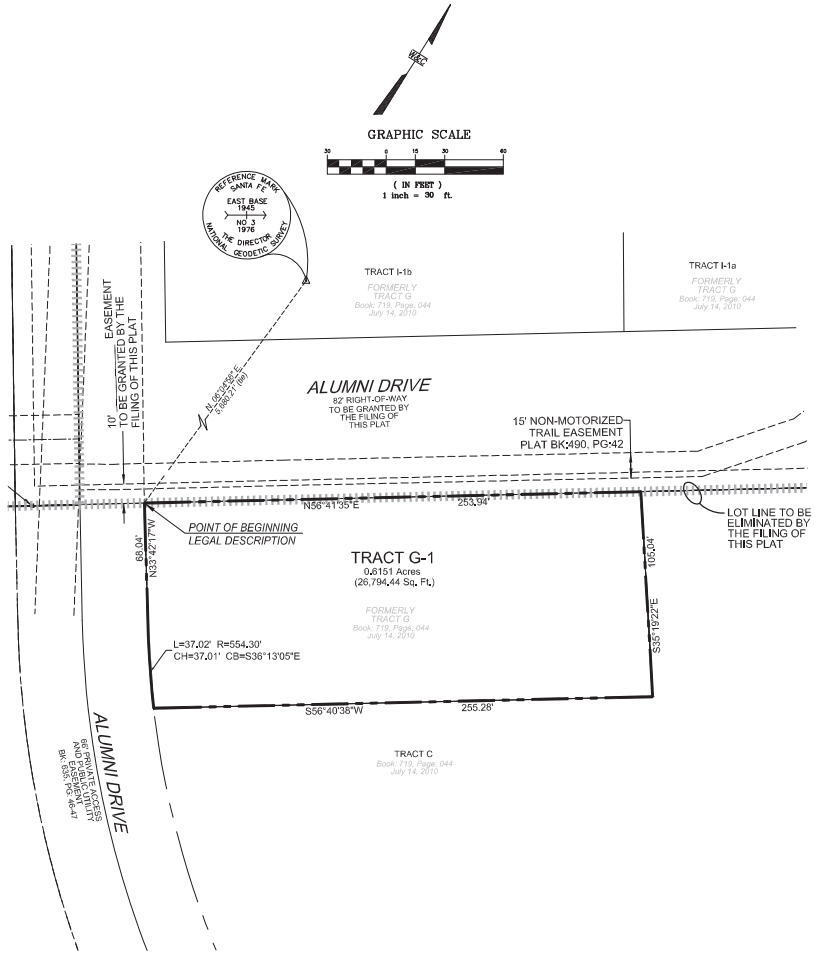

LEGAL DESCRIPTION:

A CERTAIN TRACT OF LAND WITHIN THE PERIMETER BEING MORE PARTICULARLY DESCRIBED AS FOLLOWS, ALL AS SHOWN ON "REPLAT PREPARED FOR COLLEGE OF SANTA FE, LOT LINE ADJUSTMENT OF EXISTING TRACT C & G, RECORDED PLAT BOOK 707, PAGES 50-50A WITHIN COLLEGE OF SANTA FE PROPERTY PROJECTED SECTION 34, T17N, R9E, NMPM, CITY AND COUNTY OF SANTA FE, NEW MEXICO." RECORDED ON JULY 14, 2010 IN BOOK 719 IN PAGE 044, AS INSTRUMENT NO. 1605037, RECORDS OF SANTA FE COUNTY, NEW MEXICO:

BEGINNING AT THE MOST NORTHERLY CORNER OF SAID PERIMETER FROM WHENCE A BRASS CAP STAMPED "EAST BASE 1945, NO 3 1976" A SANTA FE REFERENCE MARK, BEARS **N. 06°04'56" E.**, A DISTANCE OF **5,680.21** FEET; THENCE, FROM SAID POINT OF BEGINNING,

N. 56°41'35" E., A DISTANCE OF **253.94** FEET TO AN ANGLE POINT; THENCE,

S. 35°19'22" E., A DISTANCE OF **105.04** FEET TO AN ANGLE POINT; THENCE,

S. 56°40'38" W., A DISTANCE OF **255.28** FEET TO A CURVE; THENCE,

37.02 FEET ALONG A CURVE TO THE RIGHT HAVING A RADIUS OF **554.30** FEET, DELTA OF **3°49'35"**, CHORD BEARING AND DISTANCE OF **N. 36°13'05" E., 37.01'** FEET TO A POINT; THENCE,

N. 33°42'17" W., A DISTANCE OF **68.04** FEET TO THE POINT OF BEGINNING AND CONTAINING AN AREA OF **0.6151** ACRES, MORE OR LESS (**26,794.44** SQ. FT., MORE OR LESS)

LEGEND:

- ◦ FOUND: REBAR w/CAP (DESCRIPTION, AS NOTED)
- NEW LOT LINE
- LOT LINE TO BE ELIMINATED
- EASEMENT LINE (AS NOTED)

COUNTY OF SANTA FE
STATE OF NEW MEXICO } SS

I hereby certify that this instrument was filed for record on the _____ day of _____, 20_____ A.D. at _____ o'clock _____, and was duly recorded in book _____ page(s) _____ of the records of Santa Fe County.

Witness my Hand and Seal of office
KATHARINE E. CLARK
County Clerk, Santa Fe county, N.M.

_____
Deputy

County Clerk
Seal

STATEMENT OF DECLARATION:

THE PURPOSE OF THIS PLAT IS TO:

REPLAT TRACT G-1, BY LOT LINE ADJUSTMENT AND/OR LOT SPLIT FROM THE ORIGINAL CONFIGURATION & TO DEDICATE RIGHT-OF-WAY, AS SHOWN HEREON.

AFFIDAVIT:

KNOW ALL MEN BY THESE PRESENTS THAT THE UNDERSIGNED OWNER HAS CAUSED TO BE REPLATTED THOSE LANDS SHOWN HEREON, THE SAID REPLAT IS MADE WITH THE FREE CONSENT AND IN ACCORDANCE WITH THE DESIRES OF THE SAID OWNER, THIS REPLAT CONTAINS 4.88 ACRES, MORE OR LESS. ALL TRACTS SHOWN HEREON ARE SUBJECT TO RECIPROCAL, PRIVATE ACCESS AND PARKING EASEMENTS ALONG AND OVER EXISTING DRIVEWAYS AND PARKING AREAS. EASEMENTS ARE GRANTED FOR EXISTING UTILITIES. THERE IS NO ROAD DEDICATION.
THIS REPLAT LIES WITHIN THE PLANNING AND PLATTING JURISDICTION OF THE CITY OF SANTA FE, N.M.

OWNER: _____

BY: ALAN WEBBER, MAYOR DATE: _____

CITY CLERK: DATE: _____

STATE OF NEW MEXICO
COUNTY OF SANTA FE
THE FOREGOING INSTRUMENT WAS SWORN, ACKNOWLEDGED AND SUBSCRIBED BEFORE ME ON THIS _____ DAY OF _____, 20____.

NOTARY PUBLIC MY COMMISSION EXPIRES

REVIEWED BY COUNTY OF SANTA FE:

COUNTY TREASURER DATE: _____

REVIEWED BY CITY OF SANTA FE:

CITY ENGINEER FOR LAND USE DATE: _____

CITY PLANNER DATE: _____

SURVEYOR'S CERTIFICATION:

I, BENJAMIN M. ARAGON, NEW MEXICO PROFESSIONAL SURVEYOR No. 15268, DO HEREBY CERTIFY THAT THIS BOUNDARY SURVEY PLAT AND THE ACTUAL SURVEY ON THE GROUND UPON WHICH IT IS BASED WERE PERFORMED BY ME OR UNDER MY DIRECT SUPERVISION; THAT I AM RESPONSIBLE FOR THIS SURVEY; THAT THIS SURVEY MEETS THE MINIMUM STANDARDS FOR SURVEYING IN NEW MEXICO; AND THAT IT IS TRUE AND CORRECT TO THE BEST OF MY KNOWLEDGE AND BELIEF. I FURTHER CERTIFY THAT THIS SURVEY IS NOT A LAND DIVISION OR SUBDIVISION AS DEFINED IN THE NEW MEXICO SUBDIVISION ACT AND THAT THIS INSTRUMENT IS A BOUNDARY SURVEY PLAT OF AN EXISTING TRACT OR TRACTS.

BENJAMIN M. ARAGON N.M.P.L.S. #15268

DATE

BENJAMIN M. ARAGON NEW MEXICO 15268 REGISTERED PROFESSIONAL SURVEYOR

WILSON & COMPANY
4401 MASTHEAD ST. NE, SUITE 150
ALBUQUERQUE, NEW MEXICO 87109
OFFICE: 505-348-4000
FAX: 505-348-4155
www.wilsonco.com

EXHIBIT C

Legal Description of the Property

[To be attached]

EXHIBIT D

DEVELOPER OWNER AND CONTROL PARTIES

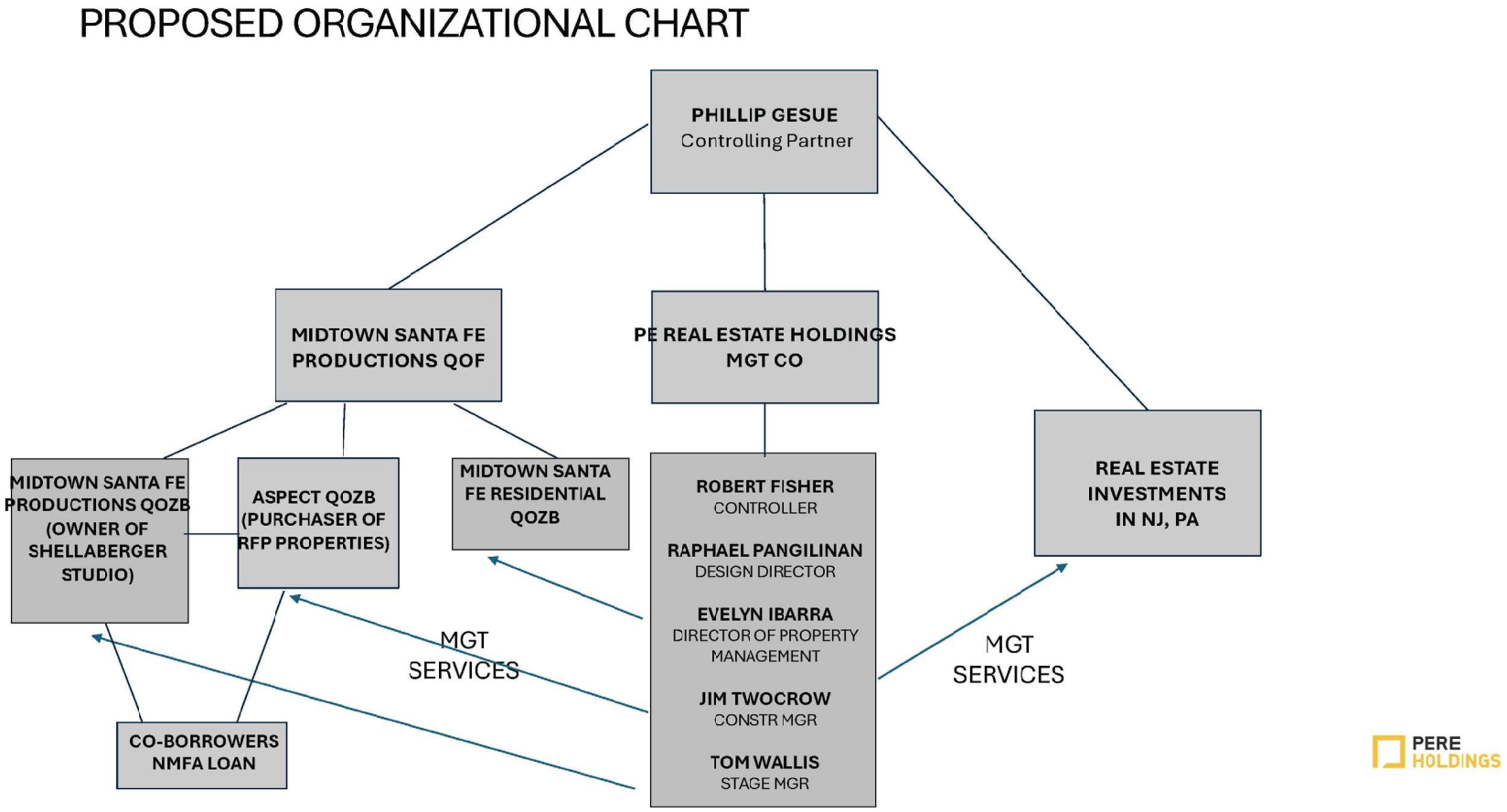

EXHIBIT E

PHASE 1 CONCEPTUAL PLANS

[attached]

ASPECT STUDIOS



Proposed
Site Enhancements
05.10.2024

RIOS

Landscape Approach:
To utilize native Northern New Mexico trees and plants that survive on little to no supplemental irrigation. The plantings provide ecological benefits like food and shelter to native wildlife. The landscape will require little maintenance while adding natural aesthetic to the studio campus.

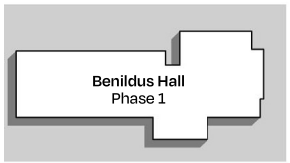

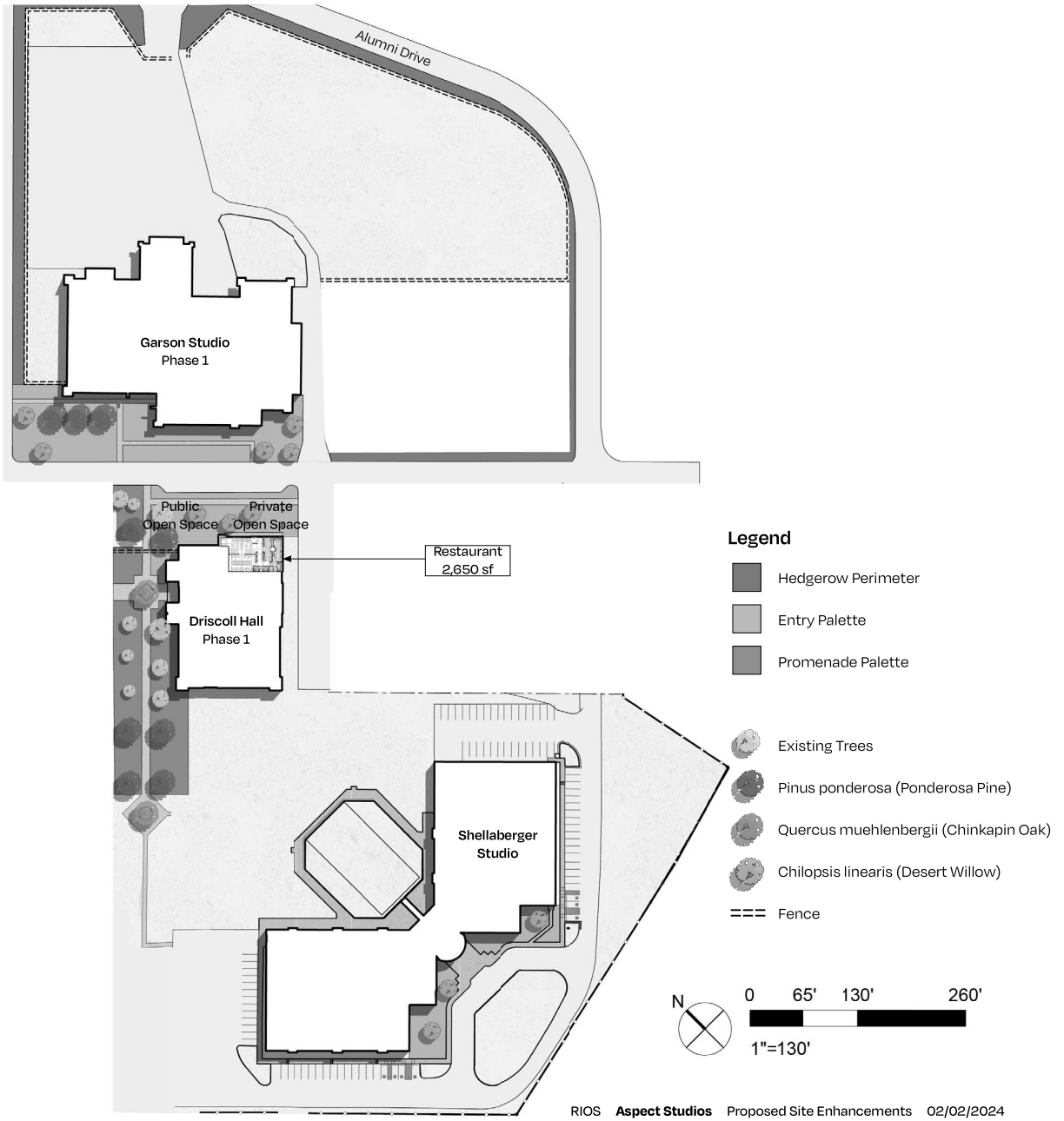

RIOS **Aspect Studios** Proposed Site Enhancements 02/02/2024

Illustrated Landscape Plan



Proposed Exterior Facade Renovation Garson Studio / Phase 1

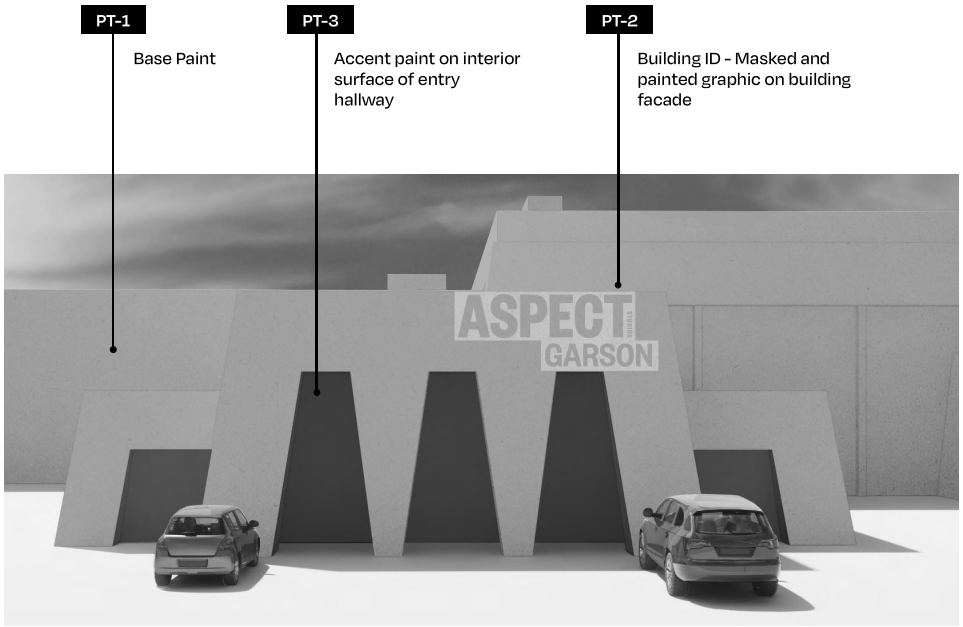

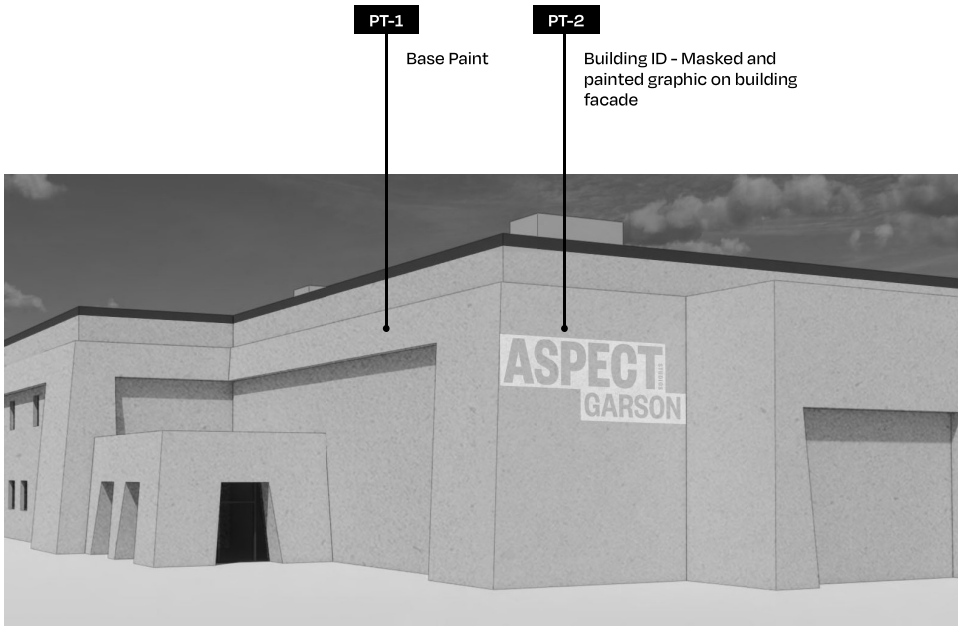

Proposed Exterior Facade Renovation Garson Studio / Phase 1

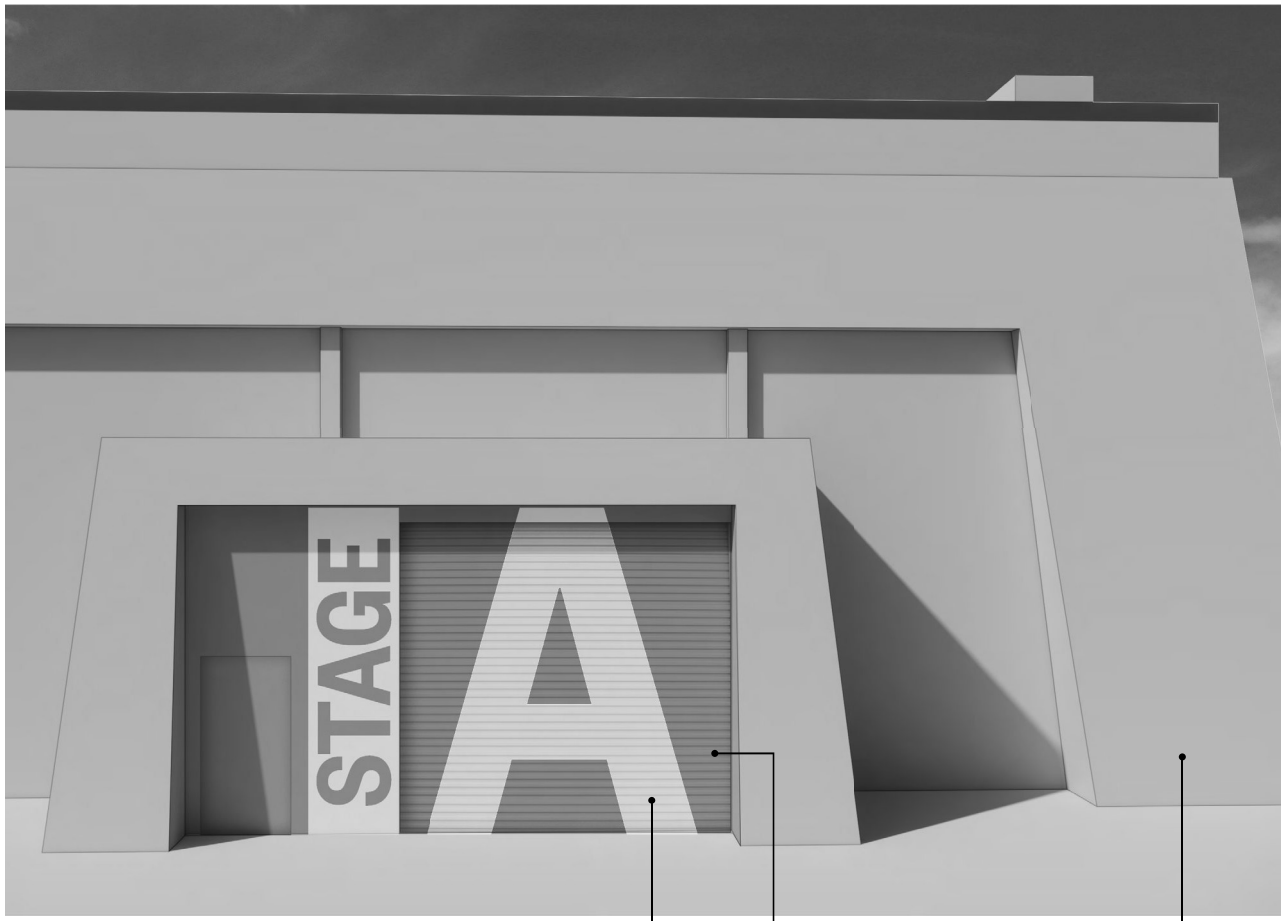

Masked and painted graphic on niche wall, roll-up door and single swing door.

Approx. 400 SF

QTY: 3

*Messaging vary by location

Base Paint



Existing (TYP. condition)

Proposed Exterior Facade Renovation Garson Studio / Phase 1



Proposed Exterior Facade Renovation Driscoll Hall / Phase 1



Perimeter planting inspiration



Entry planting inspiration - option A



Entry planting inspiration - option B



Promenade planting inspiration

Plant Palette Inspiration

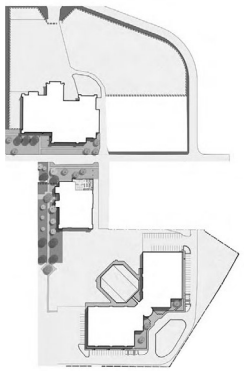

Key Map



Perimeter planting inspiration

Accent



Yucca elata (Soaptree Yucca)



Cylindropuntia imbricata
(Tree Cane Cholla)



Pinus edulis
(Pinyon Pine)



Juniperus monosperma
(Juniper)

Structural



Muhlenbergia capillaris
(Pink Muhly Grass)



Muhlenbergia rigens (Deer Grass)



Opuntia macrorhiza
(Twistpine Pricklypear)



Ericameria nauseosa (Chamisa)

Groundcover



Cylindropuntia x viridiflora
(Santa Fe Cholla)

Plant Palette - Perimeter

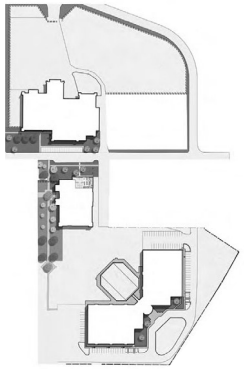

Key Map



Entry planting inspiration

Trees



Yucca elata (Soaptree Yucca)



Chilopsis linearis (Desert Willow)



Pinus ponderosa
(Ponderosa Pine), 2-3" cal.

Accent



Agave perryi (Parry's Agave)

Structural



Artemisia tridentata (Big Sagebrush)

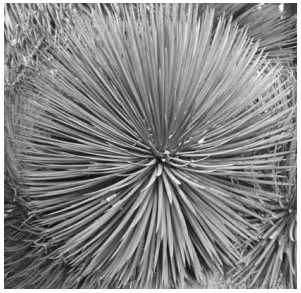

Agave stricta (Hedgehog Agave)

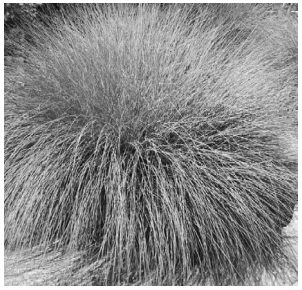

Muhlenbergia rigens (Deer Grass)

Plant Palette - Entry Option A

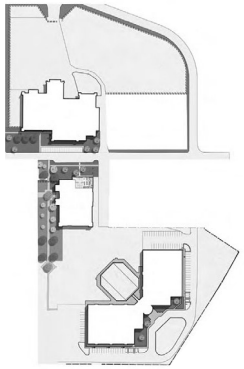

Key Map



Entry planting inspiration

Trees



Chilopsis linearis (Desert Willow)

Accent



Eriogonum umbellatum
(Sulphurflower Buckwheat)



Muhlenbergia capillaris
(Pink Muhly Grass)



Dalea purpurea (Purple Prarie Clover)

Structural



Artemisia tridentata (Big Sagebrush)



Salvia yangii (Russian Sage)



Fendlera rupicola
(Cliff Fendlerbush)



Ribes aureum (Golden Currant)

Plant Palette - Entry Option B

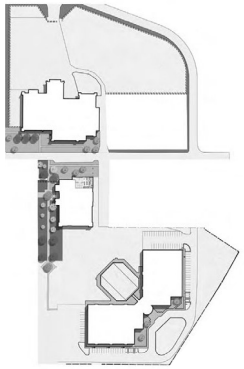

Key Map



Promenade planting inspiration

Trees



Pinus ponderosa
(Ponderosa Pine), 2-3" cal.



Quercus muehlenbergii
(Chinkapin Oak), 2-3" cal.



Pinus edulis (Pinyon Pine)

Accent

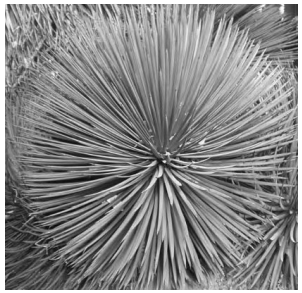

Agave stricta (Hedgehog Agave)

Structural



Artemisia tridentata (Big Sagebrush)



Cercocarpus intricatus
(Littlelead Mountain Mahogany)



Muhlenbergia rigens (Deer Grass)

Plant Palette Inspiration - Promenade

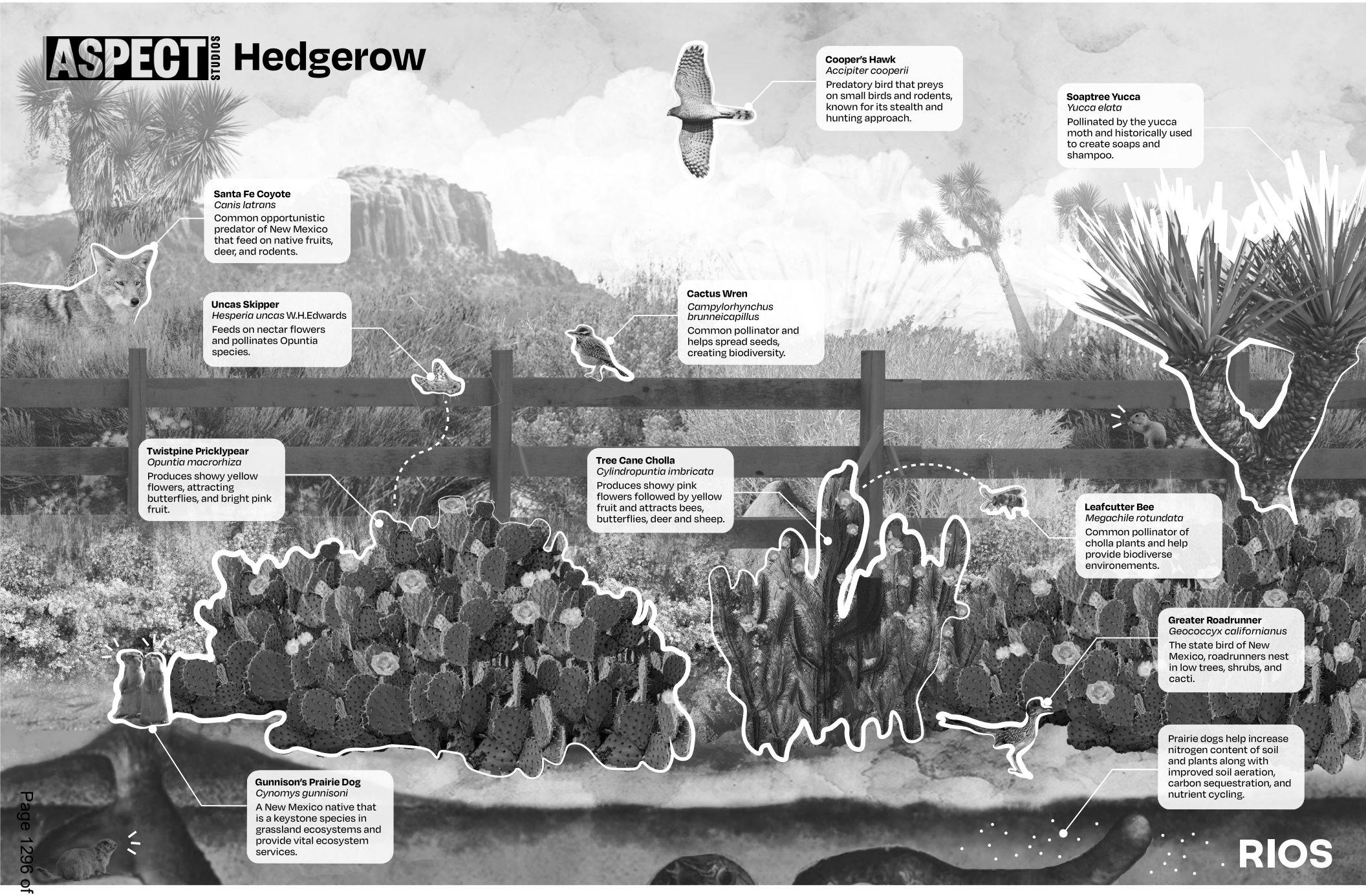
ASPECT STUDIOS
Hedgerow
Cooper's Hawk
Accipiter cooperii
Predatory bird that preys on small birds and rodents, known for its stealth and hunting approach.
Soaptree Yucca
Yucca elata
Pollinated by the yucca moth and historically used to create soaps and shampoo.
Santa Fe Coyote
Canis latrans
Common opportunistic predator of New Mexico that feed on native fruits, deer, and rodents.
Uncas Skipper
Hesperia uncas W.H.Edwards
Feeds on nectar flowers and pollinates Opuntia species.
Cactus Wren
Campylorhynchus brunneicapillus
Common pollinator and helps spread seeds, creating biodiversity.
Twistpine Pricklypear
Opuntia macrorhiza
Produces showy yellow flowers, attracting butterflies, and bright pink fruit.
Tree Cane Cholla
Cylindropuntia imbricata
Produces showy pink flowers followed by yellow fruit and attracts bees, butterflies, deer and sheep.
Leafcutter Bee
Megachile rotundata
Common pollinator of cholla plants and help provide biodiverse environements.
Greater Roadrunner
Geococcyx californianus
The state bird of New Mexico, roadrunners nest in low trees, shrubs, and cacti.
Gunnison's Prairie Dog
Cynomys gunnisoni
A New Mexico native that is a keystone species in grassland ecosystems and provide vital ecosystem services.
Prairie dogs help increase nitrogen content of soil and plants along with improved soil aeration, carbon sequestration, and nutrient cycling.
RIOS

ASPECT STUDIOS Hedgerow

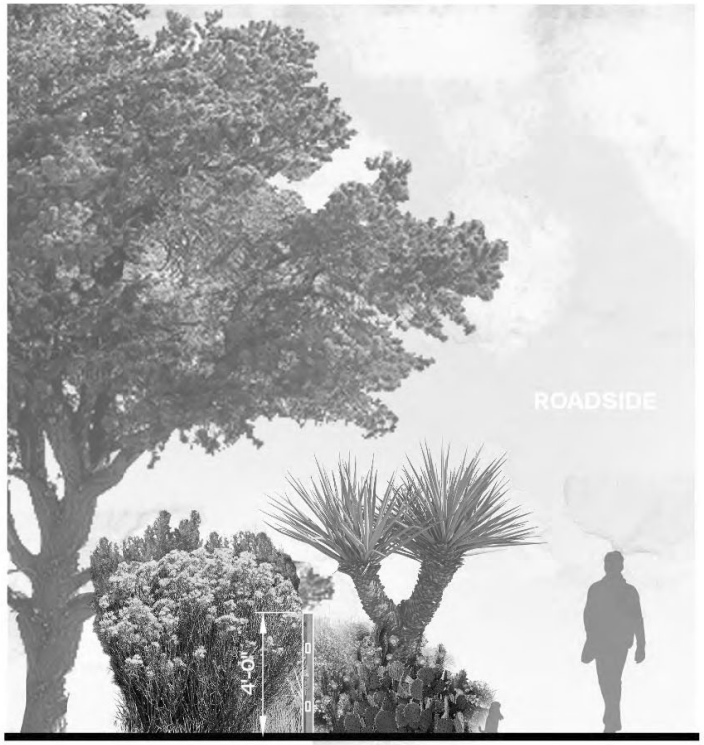

SECTION

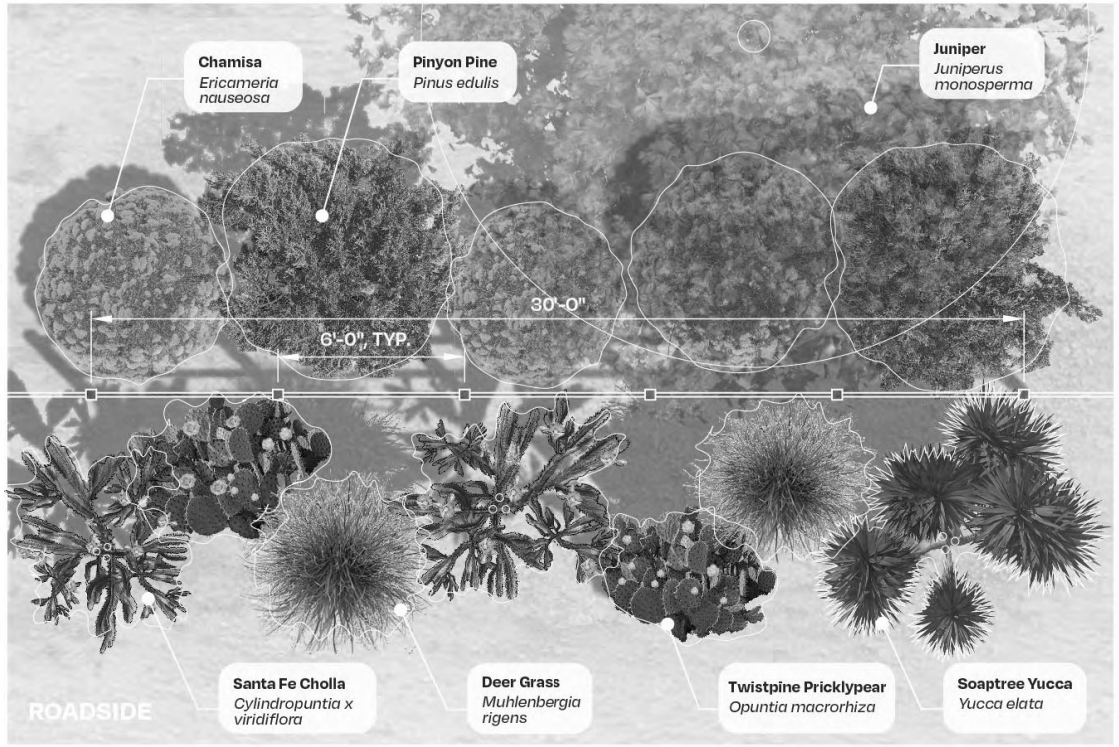

PLAN

Proposed Perimeter Planting



Hedgerows along proposed split rail fence

Proposed Perimeter Fencing

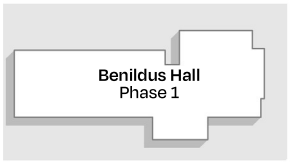

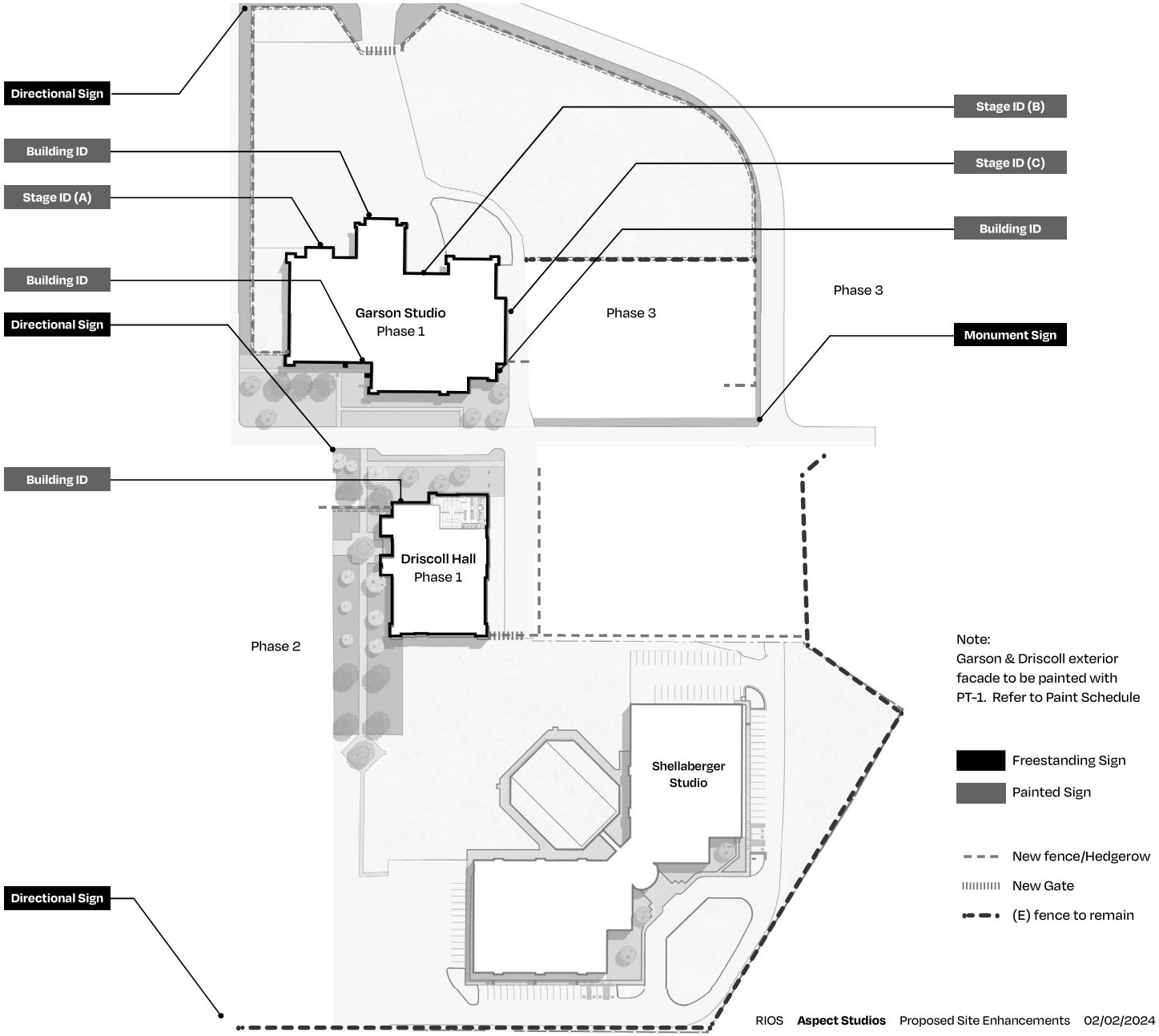

Sign Location Plan

MATERIAL + FINISH SCHEDULE			
MARK	**DESCRIPTION**	**MANUFACTURER**	**FINISH/SHEEN**
M1	1/16" TH. ALUMINUM		
M2	1/8" TH. ALUMINUM		
C1	MP32071 WHITE WONDER	MATTHEWS PAINT	SATIN
C2	MP31846 ONYX	MATTHEWS PAINT	SATIN
C3	MP08091 YELLOW BLAST	MATTHEWS PAINT	SATIN

PAINT SCHEDULE				
MARK	**DESCRIPTION**	**MANUFACTURER**	**COLOR**	**FINISH/SHEEN**
PT-1	BUILDING BASE PAINT, PEWTER	BEN MOORE	FINAL COLOR TBD PER IN-FIELD SWATCH REVIEW	SATIN
PT-2	BUILDING ID PAINT, WHITE	BEN MOORE	FINAL COLOR TBD PER IN-FIELD SWATCH REVIEW	SATIN
PT-3	ACCENT PAINT 1 - AQUA/TEAL	BEN MOORE	FINAL COLOR TBD PER IN-FIELD SWATCH REVIEW	SATIN
PT-4	ACCENT PAINT - PINK/FUCHSIA	BEN MOORE	FINAL COLOR TBD PER IN-FIELD SWATCH REVIEW	SATIN

PAINT SWATCHES

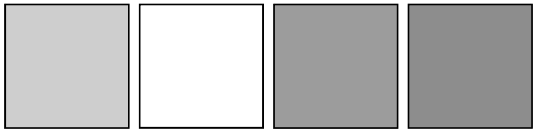

PT-1 PT-2 PT-3 PT-4

Material + Finish Schedule

EXHIBIT F

LEED REQUIREMENTS

[attached]

LEED v4 for Neighborhood Development Plan
Project Checklist

Project Name: MIDTOWN PLANS

Y	Incorporated into Midtown Plans
R	Required in RFP
P	Preference in RFP
HP	High Priority in RFP

Yes	R	P				
			Smart Location & I	Total Points Possible	**28**	
Y			Prereq	Smart Location	Required	
Y			Prereq	Imperiled Species and Ecological Communities	Required	
Y			Prereq	Wetland and Water Body Conservation	Required	
Y			Prereq	Agricultural Land Conservation	Required	
Y			Prereq	Floodplain Avoidance	Required	
Y			Credit	Preferred Locations	10	
Y			Credit	Brownfield Remediation	2	
Y			Credit	Access to Quality Transit	7	
		P	Credit	Bicycle Facilities	2	
Y			Credit	Housing and Jobs Proximity	3	
			Credit	Steep Slope Protection	1	
			Credit	Site Design for Habitat or Wetland and Water Body Conservation	1	
Y			Credit	Restoration of Habitat or Wetlands and Water Bodies	1	
			Credit	Long-Term Conservation Management of Habitat or Wetlands and Water Bodies	1	
			Neighborhood Patt	Total Points Possible	**41**	
Y			Prereq	Walkable Streets	Required	
Y			Prereq	Compact Development	Required	
Y			Prereq	Connected and Open Community	Required	
Y			Credit	Walkable Streets	9	
Y			Credit	Compact Development	6	
Y			Credit	Mixed-Use Neighborhoods	4	
Y			Credit	Housing Types and Affordability	7	
Y		P	Credit	Reduced Parking Footprint	1	
Y			Credit	Connected and Open Community	2	
			Credit	Transit Facilities	1	
		P	Credit	Transportation Demand Management	2	
Y			Credit	Access to Civic & Public Space	1	
Y			Credit	Access to Recreation Facilities	1	
Y	R		Credit	Visitability and Universal Design	1	
Y	R		Credit	Community Outreach and Involvement	2	
Y		P	Credit	Local Food Production	1	
Y			Credit	Tree-Lined and Shaded Streetscapes	2	
Y			Credit	Neighborhood Schools	1	

Y	R	P				
			Green Infrastructure & Buildings	Total Points Possible	**31**	
Y			Prereq	Certified Green Building	Required	
Y	R		Prereq	Minimum Building Energy Performance	Required	
Y	R		Prereq	Indoor Water Use Reduction	Required	
Y	R		Prereq	Construction Activity Pollution Prevention	Required	
		HP	Credit	Certified Green Buildings	5	
		P	Credit	Optimize Building Energy Performance	2	
	R		Credit	Indoor Water Use Reduction	1	
	R		Credit	Outdoor Water Use Reduction	2	
Y			Credit	Building Reuse	1	
			Credit	Historic Resource Preservation and Adaptive Reuse	2	
Y			Credit	Minimized Site Disturbance	1	
Y		HP	Credit	Rainwater Management	4	
		HP	Credit	Heat Island Reduction	1	
			Credit	Solar Orientation	1	
	R		Credit	Renewable Energy Production	3	
			Credit	District Heating and Cooling	2	
Y			Credit	Infrastructure Energy Efficiency	1	
			Credit	Wastewater Management	2	
?			Credit	Recycled and Reused Infrastructure	1	
			Credit	Solid Waste Management	1	
Y		HP	Credit	Light Pollution Reduction	1	
			Innovation & Design Process	Total Points Possible	**6**	
			Credit	Innovation	5	
			Credit	LEED® Accredited Professional	1	
			Regional Priority Credits	Total Points Possible	**4**	
			Credit	Regional Priority Credit: Region Defined	1	
			Credit	Regional Priority Credit: Region Defined	1	
			Credit	Regional Priority Credit: Region Defined	1	
			Credit	Regional Priority Credit: Region Defined	1	
0	0	0	**PROJECT TOTALS (Certification estimates)**		110	

Certified: 40-49 points, **Silver:** 50-59 points, **Gold:** 60-79 points, **Platinum:** 80+ points

LEED v4 for
NEIGHBORHOOD DEVELOPMENT

Updated July 2, 2018

Includes:
LEED ND: Plan
LEED ND: Built Project

SMART LOCATION AND LINKAGE (SLL) 6

SLL Prerequisite: Smart Location 6
ND Plan, ND 6

SLL Prerequisite: Imperiled Species and Ecological Communities Conservation 8
ND Plan, ND 8

SLL Prerequisite: Wetland and Water Body Conservation 10
ND Plan, ND 10

SLL Prerequisite: Agricultural Land Conservation 12
ND Plan, ND 12

SLL Prerequisite: Floodplain Avoidance 14
ND Plan, ND 14

SLL Credit: Preferred Locations 16
ND Plan, ND 16

SLL Credit: Brownfield Remediation 18
ND Plan, ND (SLL) 18

LT Credit: Access to Quality Transit 19
ND Plan, ND 19

LT Credit: Bicycle Facilities 21
ND Plan, ND 21

SLL Credit: Housing and Jobs Proximity 23
ND Plan, ND 23

SLL Credit: Steep Slope Protection 24
ND Plan, ND 24

SLL Credit: Site Design for Habitat or Wetland and Water Body Conservation 25
ND Plan, ND (SLL) 25

SLL Credit: Restoration of Habitat or Wetlands and Water Bodies 27
ND Plan, ND (SLL) 27

SLL Credit: Long-Term Conservation Management of Habitat or Wetlands and Water Bodies 28
ND Plan, ND (SLL) 28

NEIGHBORHOOD PATTERN AND DESIGN (NPD) 29

NPD Prerequisite: Walkable Streets 29
ND Plan, ND 29

NPD Prerequisite: Compact Development 31
ND Plan, ND 31

NPD Prerequisite: Connected and Open Community 32
ND Plan, ND 32

NPD Credit: Walkable Streets 33

ND Plan, ND 33

NPD Credit: Compact Development 36
ND Plan, ND 36

NPD Credit: Mixed-Use Neighborhoods 37
ND Plan, ND 37

NPD Credit: Housing Types and Affordability 39
ND Plan, ND 39

LT Credit: Reduced Parking Footprint 41
ND Plan, ND 41

NPD Credit: Connected and Open Community 42
ND Plan, ND 42

NPD Credit: Transit Facilities 43
ND Plan, ND 43

NPD Credit: Transportation Demand Management 44
ND Plan, ND 44

NPD Credit: Access to Civic and Public Space 46
ND Plan, ND 46

NPD Credit: Access to Recreation Facilities 47
ND Plan, ND 47

NPD Credit: Visitability and Universal Design 48
ND Plan, ND 48

NPD Credit: Community Outreach and Involvement 50
ND Plan, ND 50

NPD Credit: Local Food Production 51
ND Plan, ND 51

NPD Credit: Tree-Lined and Shaded Streetscapes 53
ND Plan, ND 53

NPD Credit: Neighborhood Schools 54
ND Plan, ND 54

GREEN INFRASTRUCTURE AND BUILDINGS (GIB) 55

GIB Prerequisite: Certified Green Building 55
ND Plan, ND (GIB) 55

GIB Prerequisite: Minimum Building Energy Performance 56
ND Plan, ND 56

WE Prerequisite: Indoor Water Use Reduction 58
ND Plan, ND 58

SS Prerequisite: Construction Activity Pollution Prevention 60
ND Plan, ND (GIB) 60

GIB Credit: Certified Green Buildings **61**
ND Plan, ND 61

GIB Credit: Optimize Building Energy Performance **62**
ND Plan, ND 62

WE Credit: Indoor Water Use Reduction **64**
ND Plan, ND (GIB) 64

WE Credit: Outdoor Water Use Reduction **66**
ND Plan, ND (GIB) 66

GIB Credit: Building Reuse **67**
ND Plan, ND (GIB) 67

GIB Credit: Historic Resource Preservation and Adaptive Reuse **68**
ND Plan, ND (GIB) 68

GIB Credit: Minimized Site Disturbance **69**
ND Plan, ND (GIB) 69

SS Credit: Rainwater Management **71**
ND Plan, ND (GIB) 71

SS Credit: Heat Island Reduction **72**
ND Plan, ND (GIB) 72

GIB Credit: Solar Orientation **74**
ND Plan, ND 74

EA Credit: Renewable Energy Production **75**
ND Plan, ND 75

GIB Credit: District Heating and Cooling **76**
ND Plan, ND 76

GIB Credit: Infrastructure Energy Efficiency **77**
ND Plan, ND 77

GIB Credit: Wastewater Management **78**
ND Plan, ND (GIB) 78

GIB Credit: Recycled and Reused Infrastructure **79**
ND Plan, ND (GIB) 79

GIB Credit: Solid Waste Management **80**
ND Plan, ND (GIB) 80

SS Credit: Light Pollution Reduction **81**
ND Plan, ND (GIB) 81

INNOVATION (IN) 85

IN Credit: Innovation **85**
ND Plan, ND 85

IN Credit: LEED Accredited Professional **86**

ND Plan, ND 86

REGIONAL PRIORITY (RP) 87

ND Plan, ND 87

APPENDICES 88

Appendix 1. Use Types and Categories 88

Appendix 2. Default Occupancy Counts 89

Appendix 3. Retail Process Load Baselines 90

SMART LOCATION AND LINKAGE (SLL)

SLL PREREQUISITE: SMART LOCATION
Required

ND
This prerequisite applies to

- Neighborhood Development Plan
- Neighborhood Development

Intent

To encourage development within and near *existing* communities and public transit infrastructure. To encourage improvement and redevelopment of existing cities, suburbs, and towns while limiting the expansion of the *development footprint* in the region. To reduce vehicle trips and vehicle distance traveled. To reduce the incidence of obesity, heart disease, and hypertension by encouraging daily physical activity associated with walking and bicycling.

Requirements

ND PLAN, ND

For All Projects
Either (1) locate the *project* on a site served by existing *water and wastewater infrastructure* or (2) locate the project within a legally adopted, publicly owned, planned water and wastewater service area, and provide new water and wastewater infrastructure for the project.

The site should also meet the requirements of one of the following four options.

Option 1. Infill Sites

Locate the project on an *infill site.*

OR

Option 2. Adjacent Sites with Connectivity

Locate the project on an *adjacent site* (i.e., a site that is adjacent to *previously developed* land) where the *connectivity* of the adjacent land is at least 90 intersections per square mile (35 intersections per square kilometer) as measured within a ½-mile (800-meter) distance of a continuous segment of the *project boundary* that constitutes at least 25% of the total project boundary and is adjacent to previous development.

Existing intersections may be counted if they were not constructed or funded by the project *developer* within the past 10 years.

Locate and/or design the project such that a through-connection (of the circulation network) intersects the adjacent portion of the project boundary at least every 600 feet (180 meters) on average and at least every 800 feet (245 meters), connecting it with an existing circulation network outside the project; nonmotorized through-connections of the circulation network may count for no more than 20% of the total. The exemptions listed in NPD Prerequisite Connected and Open Community do not apply to this option.

OR

Option 3. Transit Corridor

Locate the project on a site with existing or planned transit service such that at least 50% of *dwelling units* and nonresidential use entrances (inclusive of existing buildings) are within a ¼-mile (400-meter) *walking distance* of at least one bus, *streetcar,* or *rideshare* stop, or within a ½-mile (800-meter) walking distance of at least one *bus*

rapid transit stop, light or heavy rail station, or commuter ferry terminal. The transit service at the stop(s) in aggregate must meet the minimums listed in Table 1.

Projects must meet the requirements for both weekday and weekend trips and provide service every day.

Table 1. Minimum daily transit service

	Weekday trips	Weekend trips
Projects with multiple transit types (bus, streetcar, rail, or ferry)	60	40
Projects with commuter rail or ferry service only	24	6

If transit service is planned but not yet operational, the project must demonstrate one of the following:

1. The relevant transit agency has a signed full-funding grant agreement with the Federal Transit Administration (or equivalent national agency for project outside the U.S.) that includes a revenue operations date for the start of transit service. The revenue operations date must be no later than the date by which 50% of the project's total building gross floor area will be occupied.
2. For bus, streetcar, bus rapid transit, or ferry service, the transit agency must certify that it has an approved budget that includes specifically allocated funds sufficient to provide the planned service at the levels listed above and that service at these levels will begin no later than the date by which 50% of the project's total building gross floor area will be occupied.
3. For rail service other than streetcars, the transit agency must certify that preliminary engineering for a rail line has begun. In addition, the service must meet either of these two requirements:
   - A state legislature or local subdivision of the state (or a local government for projects outside the U.S.) has authorized the transit agency to expend funds to establish rail transit service that will begin no later than the date by which 50% of the project's total building gross floor area will be occupied.

     Or

   - A local government has dedicated funding or reimbursement commitments from future tax revenue for the development of stations, platforms, or other rail transit infrastructure that will serve the project no later than the date by which 50% of the project's total building gross floor area will be occupied.

OR

Option 4. Sites with Nearby Neighborhood Assets

Include a residential component equaling at least 30% of the project's total building gross floor area (exclusive of portions of parking structures devoted exclusively to parking) and locate the project near existing *uses* (see Appendix 1) such that the project boundary is within a ¼-mile (400-meter) walking distance of at least five uses, or such that the project's geographic center is within a ½-mile (800-meter) walking distance of at least seven uses.
The following restrictions apply.

- A use counts as only one type (e.g., a retail store may be counted only once even if it sells products in several categories).
- No more than two uses in each use type may be counted (e.g., if five restaurants are within the required distance, only two may be counted).
- The uses accessible to the project must represent at least two categories.

SLL PREREQUISITE: IMPERILED SPECIES AND ECOLOGICAL COMMUNITIES CONSERVATION
Required

ND
This prerequisite applies to

- Neighborhood Development Plan
- Neighborhood Development

Intent

To conserve imperiled species and ecological communities.

Requirements

ND PLAN, ND

Consult with the state Natural Heritage Program and state fish and wildlife agencies (or local equivalent for projects outside the U.S.) to determine if any of the following have been or are likely to be found on the project site because of the presence of suitable habitat and nearby occurrences:

- species listed as threatened or endangered under the U.S. Endangered Species Act or the state's endangered species act, or
- species or ecological communities classified by NatureServe as GH (possibly extinct), G1 (critically imperiled), or G2 (imperiled), or
- species listed as threatened or endangered specified under local equivalent standards (in areas outside the U.S.) that are not covered by NatureServe data.

If the consultations are inconclusive and site conditions indicate that imperiled species or ecological communities could be present, perform biological surveys using accepted methodologies during appropriate seasons to determine whether such species or communities occur or are likely to occur on the site. Comply with the appropriate case or option below.

Case 1. Sites without Affected Species or Ecological Community

The prerequisite is satisfied if the consultation and any necessary biological surveys determine that no such imperiled species or ecological communities have been found or have a high likelihood of occurring.

OR

Case 2. Sites with Affected Species or Ecological Community

If the site has any affected species or ecological communities, meet either of the following two options.

Option 1. Habitat Conservation Plan
Comply with an approved habitat conservation plan under the U.S. Endangered Species Act (or local equivalent for projects outside the U.S.) for each identified species or ecological community.

OR

Option 2. Habitat Conservation Plan Equivalent
Work with a qualified biologist or ecologist, a conservation organization, or the appropriate national, state or local agency to create and implement a conservation plan that includes the following actions:

- Identify and map the extent of the habitat and the appropriate buffer, not less than 100 feet (30 meters), according to best available scientific information.
- If on-site protection can be accomplished, analyze threats from development and develop a monitoring and management plan that eliminates or significantly reduces the threats.

- Protect the identified habitat and buffer in perpetuity by donating or selling the land or a conservation easement on the land to an accredited land trust, conservation organization, or relevant government agency.
- If any portion of the identified habitat and buffer cannot be protected in perpetuity, quantify the effects by acres (hectares) or number of plants and/or animals affected, and protect from development in perpetuity habitat of similar or better quality, on-site or off-site, by donating or selling a conservation easement on it to an accredited land trust, conservation organization, or relevant government agency. The donation or easement must cover an amount of land equal to or larger than the area that cannot be protected.

SLL PREREQUISITE: WETLAND AND WATER BODY CONSERVATION
Required

ND
This prerequisite applies to

- Neighborhood Development Plan
- Neighborhood Development

Intent

To preserve water quality, natural hydrology, habitat, and biodiversity through conservation of *wetlands* and *water bodies.*

Requirements

ND PLAN, ND

Limit development effects on wetlands, water bodies, and surrounding buffer land according to the requirements below.

Case 1. Sites without Sensitive Areas

Locate the *project* on a site that includes no *preproject* wetlands, water bodies, land within 50 feet (15 meters) of wetlands, and land within 100 feet (30 meters) of water bodies.

Case 2. Sites with Sensitive Areas

If the site has preproject wetlands, water bodies, land within 50 feet (15 meters) of wetlands, or land within 100 feet (30 meters) of water bodies, select one of the following two options:

Option 1. No Development on Wetlands and Water Bodies
Locate the project such that *preproject* wetlands, water bodies, land within 50 feet (15 meters) of wetlands, and land within 100 feet (30 meters) of water bodies are not affected by new development, unless the development is minor improvements or is on *previously developed* land.

OR

Option 2. Rainwater Management and Protected Buffers
Earn at least 1 point under GIB Credit Rainwater Management, and limit any development beyond minor improvements to less than the percentage of buffer land listed in Table 1.

Table 1. Maximum allowable area of development within buffer zone, by project density

Residential density		*Nonresidential density (FAR)**	*Percentage of buffer land** where development beyond minor improvements is allowed*
*DU/acre**	*DU/hectare**		
> 25	> 62	> 1.75	≤ 20%
> 18 and ≤ 25	> 45 and ≤ 62	> 1.25 to ≤ 1.75	≤ 15%
> 10 and ≤ 18	> 25 and ≤ 45	> .75 to ≤ 1.25	≤ 10%
≤ 10	≤ 25	≤ .75	≤ 5%

DU = dwelling unit; FAR = floor-area ratio.

* For this option, a mixed-use project may use either its residential or its nonresidential *density* to determine the percentage of allowable development, regardless of which is higher.
** Buffer width may vary as long as the total buffer area is equal to the area within 50 feet (15 meters) of wetlands and/or within 100 feet (30 meters) of water bodies, minus excluded features (see list of minor improvements, below). In no case may the buffer width be less than 25 feet (7.5 meters) for wetlands and 50 feet (15 meters) for water bodies, measured from the edge. Inside this minimum buffer, only minor improvements and/or improvements that result in no ecological impairment of the wetland or water body, as determined by a qualified biologist, are allowed.

For All Projects
Comply with all local, state, and national regulations pertaining to wetland and water body conservation.
The following features are not considered wetlands, water bodies, or buffer land that must be protected for the purposes of this prerequisite:

- previously developed land;
- man-made water bodies (such as industrial mining pits, concrete-lined canals, or stormwater retention ponds) that lack natural edges and floors or native ecological communities in the water and along the edge;
- man-made linear wetlands that result from the interruption of natural drainages by *existing* rights-of-way; and
- wetlands that were man-made incidentally and have been rated "poor" for all measured wetland functions, as assessed by a qualified biologist using a method that is accepted by state or regional permitting agencies (or a local equivalent for projects outside the U.S.).

Minor improvements within the buffer may be undertaken to enhance appreciation for the wetland or water body, provided such facilities are open to public access. Only the following improvements are permitted:

- bicycle and pedestrian pathways no more than 12 feet wide (3.5 meters), of which no more than 8 total feet (2.5 meters) may be impervious;
- activities to maintain or restore native natural communities and/or natural hydrology;
- one single-story structure not exceeding 500 square feet (45 square meters) per 300 linear feet (90 linear meters) of buffer, on average;
- grade changes necessary to ensure public access;
- clearings, limited to one per 300 linear feet (90 linear meters) of buffer, on average, not exceeding 500 square feet (45 square meters) each, for tables, benches, and access for nonmotorized recreational watercraft;
- removal of hazardous trees (up to 75% of dead trees), trees smaller than 6 inches (150 millimeters) in diameter at breast height, trees with a condition rating of less than 40%, and up to 20% of trees larger than 6 inches (150 millimeters) in diameter at breast height with a condition rating of 40% or higher, as based on an assessment by an arborist certified by the International Society of Arboriculture (ISA) using ISA standard measures or for projects outside the U.S.an equivalent certified professional utilizing equivalent methodology; and
- *brownfield* remediation activities.

Off-street parking is not considered a minor improvement.

Direct development of wetlands and water bodies is prohibited, except for minimal-impact structures, such as an elevated boardwalk, that allow access to the water for educational and recreational purposes. Structures that protrude into wetlands or water bodies may be replaced, provided the replacement structure has the same or smaller footprint and a similar height.

SLL PREREQUISITE: AGRICULTURAL LAND CONSERVATION
Required

ND
This prerequisite applies to

- Neighborhood Development Plan
- Neighborhood Development

Intent

To preserve irreplaceable agricultural resources by protecting *prime* and *unique farmland* from development.

Requirements

ND PLAN, ND

Locate the *project* on a site that is not within a state or locally designated agricultural preservation district (or local equivalent for projects outside the U.S.), unless any changes made to the site conform to the requirements for development within the district (as used in this requirement, "district" does not equate to land-use zoning).

Meet the requirements of one of the following five options.

Option 1. Infill Sites
Locate the project on an *infill site.*

OR

Option 2. Sites Served by Transit
Comply with SLL Prerequisite Smart Location, Option 3, Transit Corridor.

OR

Option 3. Development Rights Receiving Area
Locate the project within a designated receiving area for development rights under a publicly administered farmland protection program that provides for the transfer of development rights from lands designated for conservation to lands designated for development.

OR

Option 4. Sites without Affected Soils
Locate the project's *development footprint* such that it does not disturb prime farmland, unique farmland, or farmland of statewide or local importance as defined by the U.S. Code of Federal Regulations, Title 7, Volume 6, Parts 400 to 699, Section 657.5 and identified in a state Natural Resources Conservation Service soil survey (or local equivalent for projects outside the U.S.).

OR

Option 5. Sites with Affected Soils
If development footprint affects land with prime farmland, unique farmland, or farmland of statewide or local importance as defined by the U.S. Code of Federal Regulations, Title 7, Volume 6, Parts 400 to 699, Section 657.5 and identified in a state Natural Resources Conservation Service soil survey (or local equivalent for projects outside the U.S.), mitigate the loss through the purchase or donation of easements providing permanent protection from development on land with comparable soils in accordance with the ratios based on densities per acre (per hectare) of *buildable land* listed in Tables 1 and 2.

Table 1. Mitigation ratios for projects in large metropolitan or micropolitan statistical areas (pop. 250,000 or more)

Residential density		*Nonresidential density (FAR of buildable land available for nonresidential use)*	*Mitigation ratio (area of easement : area of project on prime, unique, or significant farmland)*
DU per acre of buildable land available for residential use	*DU per hectare of buildable land available for residential use*		
> 7 and ≤ 8.5	> 17.5 and ≤ 21	> 0.50 and ≤ 0.67	2 to 1
> 8.5 and ≤ 10	> 21 and ≤ 25	> 0.67 and ≤ 0.75	1.5 to 1
> 10 and ≤ 11.5	> 25 and ≤ 28.5	> 0.75 and ≤ 0.87	1 to 1
> 11.5 and ≤ 13	> 28.5 and ≤ 32	> 0.87 and ≤ 1.0	.5 to 1
> 13	> 32	> 1.0	No mitigation

Table 2. Mitigation ratios for projects in small metropolitan or micropolitan statistical areas (pop. less than 250,000)

Residential density		*Nonresidential density (FAR of buildable land available for nonresidential use)*	*Mitigation ratio (area of easement : area of project on prime, unique, or significant farmland)*
DU/acre of buildable land available for residential use	*DU/hectare of buildable land available for residential use*		
> 7 and ≤ 8	> 17.5 and ≤ 20	> 0.50 and ≤ 0.58	2 to 1
> 8 and ≤ 9	> 20 and ≤ 22	> 0.58 and ≤ 0.67	1 to 1
> 9 and ≤ 10	> 22 and ≤ 25	> 0.67 and ≤ 0.75	0.5 to 1
> 10	> 25	> 0.75	No mitigation

DU = dwelling unit; FAR = floor-area ratio.

All off-site mitigation must be located within 100 miles (160 kilometers) of the project.
Up to 15% of the affected farmland area may be subtracted from the mitigation area required of the project in Tables 1 and 2 if it is permanently dedicated for community gardens. Portions of parking structures devoted exclusively to parking must be excluded from the numerator when calculating the *floor-area ratio* (FAR).

The mitigation ratio for a mixed-use project is calculated as follows:
1. Determine the total floor area of all residential and nonresidential uses.
2. Calculate the percentage residential and percentage nonresidential of the total floor area.
3. Determine the density of the residential and nonresidential components as measured in *dwelling units* per acre and FAR, respectively.
4. Referring to Tables 1 and 2, find the appropriate mitigation ratios for the residential and nonresidential components.
5. If the mitigation ratios are different, multiply the mitigation ratio of the residential component by its percentage of the total floor area, and multiply the mitigation ratio of the nonresidential component by its percentage.
6. Add the two numbers produced by step 5. The result is the mitigation ratio.

SLL PREREQUISITE: FLOODPLAIN AVOIDANCE
Required

ND
This prerequisite applies to

- Neighborhood Development Plan
- Neighborhood Development

Intent

To protect life and property, promote open space and habitat conservation, and enhance water quality and natural hydrologic systems.

Requirement

ND PLAN, ND

Case 1. Sites without Flood Hazard Areas

Locate on a site that is entirely outside any flood hazard area shown on a legally adopted flood hazard map or otherwise legally designated by the local jurisdiction or the state. For projects in places without legally adopted flood hazard maps or legal designations, locate on a site that is entirely outside any floodplain subject to a 1% or greater chance of flooding in any given year.

Case 2. Infill or Previously Developed Sites with Flood Hazard Areas

Locate the *project* on an *infill site* or a *previously developed site* and select one of the following two options.

Option 1. American Society of Civil Engineers Standard

For any portion of the site within the flood hazard area, design buildings in accordance with American Society of Civil Engineers Standard 24-05 (ASCE 24).

If the project includes construction of a critical facility that is intended to remain operational in the event of a flood, or whose function is critical for postflood recovery, design the facility to be protected and operable at the floodwater levels specified in ASCE 24, or at the water levels represented by a 0.2% annual chance (500-year) flood, whichever is higher. For the purpose of this requirement, critical facilities include, but are not limited to, hospitals, emergency operations centers, building or portions of buildings designated as emergency shelters, water and sewage treatment facilities, and fire and police stations.

OR

Option 2. National Flood Insurance Program

For any portion of the site within the flood hazard area, design buildings in accordance with National Flood Insurance Program (NFIP) requirements. Project outside the U.S. may use a local equivalent to NFIP if the program is equal to or more stringent than NFIP and is administered at the national level.

> If the project involves a critical facility that is intended to remain operational in the event of a flood, or whose function is critical for postflood recovery, design the facility to be protected and operable at the water levels represented by a 0.2% annual chance (500-year) flood. For the purpose of this requirement, critical facilities include, but are not limited to, hospitals, emergency operations centers, building or portions of buildings designated as emergency shelters, water and sewage treatment facilities, and fire and police stations.

Case 3. All Other Sites with Flood Hazard Areas

Meet the requirements of one of the following two options.

Option 1. American Society of Civil Engineers Standard

Previously developed portions of the site
On portions of the site that are previously developed and in the flood hazard area, design buildings in accordance with American Society of Civil Engineers Standard 24-05 (ASCE 24).

Nonpreviously developed portions of the site
On portions of the site that are not previously developed and in the flood hazard area, do not develop on land that is within either a regulatory floodway or a coastal high hazard area (Zone V), as shown on the flood hazard map.

On all other portions of the site that are not previously developed and in the flood hazard area, design buildings in accordance with ASCE 24.

Critical facilities in the flood hazard area
If the project involves a critical facility that is intended to remain operational in the event of a flood, or whose function is critical for postflood recovery, design the facility to be protected and operable at the floodwater levels specified in ASCE 24 or at the water levels represented by a 0.2% annual chance (500-year) flood, whichever is higher. For the purpose of this requirement, critical facilities include, but are not limited to, hospitals, emergency operations centers, building or portions of buildings designated as emergency shelters, water and sewage treatment facilities, and fire and police stations.

OR

Option 2. National Flood Insurance Program

Previously developed portions of the site
On portions of the site that are previously developed and in the flood hazard area, design buildings in accordance with National Flood Insurance Program (NFIP) requirements. Project outside of the U.S. may use a local equivalent to NFIP if the program is equal to or more stringent than NFIP and is administered at the national level.

Nonpreviously developed portions of the site
On portions of the site that are not previously developed and in the flood hazard area, do not develop on land that is within either a regulatory floodway or a coastal high hazard area (Zone V), as shown on the flood hazard map.

On all other portions of the site that are not previously developed and in the flood hazard area, design buildings in accordance with NFIP.

Critical facilities in the flood hazard area
If the project involves a critical facility that is intended to remain operational in the event of a flood, or whose function is critical for postflood recovery, design the facility to be protected and operable at the water levels represented by a 0.2% annual chance (500-year) flood. For the purpose of this requirement, critical facilities include, but are not limited to, hospitals, emergency operations centers, building or portions of buildings designated as emergency shelters, water and sewage treatment facilities, and fire and police stations.

SLL CREDIT: PREFERRED LOCATIONS

ND
1–10 points
This credit applies to

- Neighborhood Development Plan
- Neighborhood Development

Intent

To encourage development within *existing* cities, suburbs, and towns to reduce the environmental and public health consequences of sprawl. To reduce development pressure beyond the limits of existing development. To conserve the natural and financial resources required for infrastructure.

Requirements

ND PLAN, ND

Achieve any combination of requirements in the following three options, for a total of up to 10 points.

Option 1. Location Type (1–5 points)

Locate the *project* in one of the following locations:

- a *previously developed site* that is not an *adjacent site* or *infill site* (1 point);
- an *adjacent site* that is also a previously developed site (2 points);
- an infill site that is not a previously developed site (3 points); or
- an infill site that is also a previously developed site (5 points).

AND/OR

Option 2. Connectivity (1-5 points)

Locate the project in an area that has existing *connectivity,* as listed in Table 1. Measure connectivity one of two ways:

- within 1/2 mile (800 meters) of the project boundary; or
- within the project and within ½ mile (800 meters) of the project boundary.

Intersections within the site cannot be counted if they were constructed or funded by the *developer* within the past 10 years.

Table 1. Points for connectivity

Intersections per square mile	Intersections per square kilometer	Points
200–249	320–399	1
250–299	400–479	2
300–349	480–559	3
350–399	560–639	4
> 400	> 640	5

AND/OR

Option 3. Designated High-Priority Locations (3 points)

Earn at least 2 points under NPD Credit Housing Types and Affordability, Option 2, Affordable Housing.

AND

Locate the project in one of the following high-priority redevelopment areas:

- a site listed by the EPA National Priorities List;
- a Federal Empowerment Zone site;
- a Federal Enterprise Community site;
- a Federal Renewal Community site;
- a Department of the Treasury Community Development Financial Institutions Fund Qualified Low-Income Community (a subset of the New Markets Tax Credit Program);
- a site in a U.S. Department of Housing and Urban Development's Qualified Census Tract (QCT) or Difficult Development Area (DDA); or
- a local equivalent program administered at a national level for projects outside the U.S.

SLL CREDIT: BROWNFIELD REMEDIATION

ND
1–2 points
This credit applies to

- Neighborhood Development Plan
- Neighborhood Development

Intent
To encourage the cleanup of contaminated lands and developing sites that have been identified as contaminated.

Requirements

ND PLAN, ND (SLL)

Option 1. Brownfield Site (1 point)

At a project site identified as a brownfield or where soil or groundwater contamination has been identified, and the local, state, or national authority (whichever has jurisdiction) requires its remediation, perform remediation to the satisfaction of that authority.

OR

Option 2. High-Priority Redevelopment Area (2 points)
Achieve the requirements in Option 1.

AND

Locate the project in one of the following high-priority redevelopment areas:

- EPA National Priorities List
- Federal Empowerment Zone
- Federal Enterprise Community
- Federal Renewal Community
- Department of the Treasury Community Development Financial Institutions Fund Qualified Low-Income Community (a subset of the New Markets Tax Credit Program)
- U.S. Department of Housing and Urban Development's Qualified Census Tract (QCT) or Difficult Development Area (DDA)
- Or a local equivalent program administered at the national level for projects outside the U.S.

LT CREDIT: ACCESS TO QUALITY TRANSIT

ND
1–7 points
This credit applies to

- Neighborhood Development Plan (1–7 points)
- Neighborhood Development (1–7 points)

Intent

To encourage development in locations shown to have multimodal transportation choices or otherwise reduced motor vehicle use, thereby reducing greenhouse gas emissions, air pollution, and other environmental and public health harms associated with motor vehicle use.

Requirements

ND PLAN, ND

Locate the project on a site with existing or planned transit (i.e., service with the funding commitments as specified in SLL Prerequisite Smart Location) service such that at least 50% of *dwelling units* and nonresidential use entrances (inclusive of existing buildings) are within a ¼-mile (400-meter) *walking distance* of at least one bus or *streetcar* stop, or within a ½-mile (800-meter) walking distance of at least one *bus, streetcar, or rideshare stops or within a ½-mile (800-meter) walking distance of bus rapid transit* stop, light or heavy rail station, commuter rail station, or commuter ferry terminal and the transit service at the stop(s) in aggregate meets the minimums listed in Tables 1 and 2.

Projects must meet the requirements for both weekday and weekend trips and provide service every day.

Table 1. Minimum daily transit service for projects with multiple transit types (bus, *streetcar*, rail, or ferry).

Weekday trips	Weekend trips	Points
60	40	1
76	50	2
100	65	3
132	85	4
180	130	5
246	150	6
320	200	7

Table 2. Minimum daily transit service for projects with commuter rail or ferry service only

Weekday trips	Weekend trips	Points
24	6	1
40	8	2
60	12	3

Projects served by two or more transit routes such that no one route provides more than 60% of the prescribed levels may earn an additional point, up to the maximum number of points.

If existing transit service is temporarily rerouted outside the required distances for less than two years, the project may meet the requirements, provided the local transit agency has committed to restoring the routes with service at or above the prior level.

LT CREDIT: BICYCLE FACILITIES

ND
1–2 points
This credit applies to

- Neighborhood Development Plan (1-2 points)
- Neighborhood Development (1-2 points)

Intent

To promote bicycling and transportation efficiency and reduce vehicle distance traveled. To improve public health by encouraging utilitarian and recreational physical activity.

Requirements

ND PLAN, ND
Meet the following requirements in 90% of all new buildings. The buildings that do not have bicycle storage may not exceed 10% of the total project building floor area.

Non-Residential (excluding Retail) Buildings
Provide short-term bicycle storage for at least 2.5% of peak visitors, but no fewer than four storage spaces per building.

Provide long-term bicycle storage for at least 5% of all regular building occupants, but no fewer than four storage spaces per building in addition to the short-term bicycle storage spaces. Provide at least one on-site shower with changing facility for the first 100 regular building occupants and one additional shower for every 150 regular building occupants thereafter.

Multi-unit Residential Buildings
Provide short-term bicycle storage for at least 2.5% of all peak visitors, but no fewer than four storage spaces per building.

Provide long-term bicycle storage for at least 30% of all regular building occupants, but no less than one storage space per residential unit.

Retail Buildings
Provide at least two short-term bicycle storage spaces for every 5,000 square feet (465 square meters), but no fewer than two storage spaces per building.

Provide long-term bicycle storage for at least 5% of regular building occupants, but no fewer than two storage spaces per building in addition to the short-term bicycle storage.

Provide at least one on-site shower with changing facility for the first 100 regular building occupants and one additional shower for every 150 regular building occupants thereafter.

Mixed-Use Buildings
Meet the above requirements for the project's non-residential, multi-unit residential, and retail spaces.

For all projects:

Short-term bicycle storage must be within 100 feet (30 meters) walking distance of any main entrance. *Long-term bicycle storage* must be within 100 feet (30 meters) walking distance of any *functional entry*. It must be easily accessible to all building users.

Shower and changing facility requirements may be met by providing the equivalent of free access to on-site health club shower facilities, if the health club can be accessed without going outside.

Additionally, meet the requirements of at least one of the following two options.

Option 1. Bikable Location (1 point)

Locate the *project* such that the project boundary is within ¼ mile (400 meters) bicycling distance of an existing bicycle network that connects to at least one of the following.

- at least 10 diverse uses (see Appendix 1);
- a school or *employment center,* if the project total floor area is 50% or more residential; or
- *a bus rapid transit* stop, light or heavy rail station, commuter rail station, or ferry terminal.

All destinations must be within a 3-mile (4800-meter) bicycling distance of the project boundary.

AND/OR

Option 2. Bicycle Network (1 point)

Design the *project* such that at least 50% of *dwelling units* and nonresidential use entrances are located on an existing or planned *bicycle network* extending at least 3 continuous miles (4.8 contiguous kilometers). Within those 3 miles (4.8 kilometers), the network must connect to one of the following:

- a school;
- an employment center; or
- at least 10 diverse uses (see Appendix 1).

SLL CREDIT: HOUSING AND JOBS PROXIMITY

ND
3 points
This credit applies to

- Neighborhood Development Plan
- Neighborhood Development

Intent

To encourage balanced communities with a proximate housing and employment opportunities.

Requirements

ND PLAN, ND

Option 1. Project with Affordable Residential Component (3 points)

Include a residential component equaling at least 30% of the *project*'s total building floor area (exclusive of parking structures), and locate or design the project such that its geographic center (or boundary if the project exceeds 500 acres [200 hectares]) is within a ½-mile (800-meter) *walking distance* of *existing* full-time equivalent jobs whose number equals or exceeds the number of *dwelling units* in the project. Satisfy the requirements necessary to earn at least 1 point under NPD Credit Housing Types and Affordability, Option 2, Affordable Housing.

Option 2. Project with Residential Component (2 points)

Include a residential component equaling at least 30% of the project's total building floor area (exclusive of parking structures) and locate or design the project such that its geographic center (or boundary if the project exceeds 500 acres [200 hectares]) is within a ½-mile (800-meter) walking distance of existing full-time equivalent jobs whose number equals or exceeds the number of dwelling units in the project.

Option 3. Infill Project with Nonresidential Component (1 point)

Include a nonresidential component equaling at least 30% of the project's total building floor area (exclusive of parking structures) and locate on an *infill site* whose geographic center (or boundary if the project exceeds 500 acres [200 hectares]) is within a ½-mile (800-meter) walking distance of an existing rail transit, ferry, or tram stop and within a ½-mile (800-meter) walking distance of existing dwelling units whose number equals or exceeds 50% of the number of new full-time equivalent jobs located in the project.

SLL CREDIT: STEEP SLOPE PROTECTION

ND
1 point
This credit applies to

- Neighborhood Development Plan
- Neighborhood Development

Intent

To minimize erosion, protect habitat, and reduce stress on natural water systems by preserving steep slopes in a natural, vegetated state.

Requirements

ND PLAN, ND

The following requirements apply to projects sites that have slopes greater than 15%.

Ensure that the share of the development footprint on existing slopes less than 15% is greater than the share of the project site with existing slopes greater than 15%.

On any existing, previously developed slopes steeper than 15%, restore the slope area with *native plants* or noninvasive *adapted plants,* according to Table 1. In addition, on any existing, undeveloped slopes steeper than 15%, limit the development area according to Table 1.

Table 1. Required restoration and protection areas of slope

Slope	Previously developed slopes: % of area to be restored	Undeveloped slopes: % of area permitted for development
> 40%	100%	No development permitted
26% to 40%	60%	40%
>15% to 25%	40%	60%

For undeveloped slopes steeper than 40%, do not disturb portions of the project site within 50 feet (15 meters) horizontally of the top of the slope and 75 feet (23 meters) horizontally from the toe of the slope.

Develop *covenants, conditions, and restrictions* (CC&Rs), development agreements, or other binding documents that will protect all steep slopes in perpetuity.

SLL CREDIT: SITE DESIGN FOR HABITAT OR WETLAND AND WATER BODY CONSERVATION

ND
1 point
This credit applies to

- Neighborhood Development Plan
- Neighborhood Development

Intent
To conserve native plants, wildlife habitat, wetlands, and water bodies.

Requirements

ND PLAN, ND (SLL)

Case 1. Sites without Significant Habitat or Wetlands and Water Bodies (1 point)
Locate the project on a site that does not have significant habitat, as defined in Case 2 of this credit, and is not within 100 feet (30 meters) of such habitat. Fulfill the requirements of Case 1 or Case 2, Option 1 (with no minor improvements within buffer areas) under SLL Prerequisite Wetland and Water Body Conservation.

Case 2. Sites with Habitat or Wetlands or Water Bodies (1 point)

Meet the requirements of Option 1 or Option 2.

Option 1. Sites with Significant Habitat
Work with both the state's Natural Heritage Program and the state fish and wildlife agency (or local equivalent agency for projects outside the U.S.) to delineate identified significant habitat on the site. Do not disturb significant habitat or portions of the site within an appropriate buffer around the habitat. The geographic extent of the habitat and buffer must be identified by a qualified biologist, a nongovernmental conservation organization, or the appropriate state, regional, or local agency. Protect significant habitat and its identified buffers from development by donating or selling the land, or a conservation easement on the land, to an accredited land trust, conservation organization, or relevant government agency (a deed covenant is not sufficient to meet this requirement) for the purpose of long-term conservation.

Identify and commit to ongoing management activities, along with parties responsible for management and funding available, such that habitat is maintained in preproject condition or better for a minimum of three years after the project is built out. The requirement for identifying ongoing management activities may also be met by earning SLL Credit Long-Term Conservation Management of Habitat or Wetlands and Water Bodies.

Significant habitat for this credit is as follows:

- *Endangered species acts.* Habitat for species that are listed or are candidates for listing under state or national endangered species acts, habitat for species of special concern in the state, and habitat for species or ecological communities classified as GH, G1, G2, G3, S1, or S2 by NatureServe (local equivalent standards for threatened and endangered species may be used in countries outside the U.S. that do not have access to NatureServe data);
- *Locally or regionally significant habitat.* Locally or regionally significant habitat of any size, or patches of predominantly native vegetation at least 150 acres (60 hectares) (even if part of the area lies outside the project boundary); and
- *Habitat flagged for conservation.* Habitat flagged for conservation under a regional or state conservation or green infrastructure plan.

OR

Option 2. Sites with Wetlands and Water Bodies (1 point)
Design the project to conserve 100% of all water bodies, wetlands, land within 100 feet (30 meters) of water bodies, and land within 50 feet (15 meters) of wetlands on the site. Using a qualified biologist, conduct an assessment, or compile existing assessments, showing the extent to which those water bodies or wetlands provide (1) water quality maintenance; (2) wildlife habitat; and (3) hydrologic function maintenance, including flood protection. Assign appropriate buffers, measuring not less than 100 feet (30 meters) for water bodies and 50 feet (15 meters) for wetlands, based on the functions provided, contiguous soils and slopes, and contiguous land uses. Do not disturb wetlands, water bodies, or their buffers, and protect them from development by donating or selling the land, or a conservation easement on the land, to an accredited land trust, conservation organization, or relevant government agency (a deed covenant is not sufficient to meet this requirement) for the purpose of long-term conservation.

Identify and commit to ongoing management activities, along with parties responsible for management and funding available, such that habitat is maintained in preproject condition or better for a minimum of three years after the project is built out. The requirement for identifying ongoing management activities may also be met by earning SLL Credit Long-Term Conservation Management of Habitat or Wetlands and Water Bodies. The project does not meet the requirements if it degrades habitat for species identified in endangered species acts or habitat flagged for conservation in Option 1.

For All Projects
The following features are not considered wetlands, water bodies, or buffer land that must be protected:

a. previously developed land;
b. man-made water bodies (such as industrial mining pits, concrete-lined canals, or rainwater retention ponds) that lack natural edges and floors or native ecological communities in the water and along the edge;
c. man-made linear wetlands that result from the interruption of natural drainages by existing rights-of-way; and
d. wetlands that were created incidentally by human activity and have been rated “poor” for all measured wetland functions, as assessed by a qualified biologist using a method that is accepted by state or regional permitting agencies (or a local equivalent method for projects outside the U.S.).

SLL CREDIT: RESTORATION OF HABITAT OR WETLANDS AND WATER BODIES

ND
1 point
This credit applies to

- Neighborhood Development Plan
- Neighborhood Development

Intent
To restore native plants, wildlife habitat, wetlands, and water bodies harmed by previous human activities.

Requirements

ND PLAN, ND (SLL)

Using only native plants, restore *predevelopment* native ecological communities, *water bodies*, or *wetlands* on the *project* site in an area equal to or greater than 10% of the *development footprint*.

Work with a qualified biologist to ensure that restored areas will have the native species assemblages, hydrology, and other habitat characteristics that likely occurred in predevelopment conditions. Protect such areas from development by donating or selling the land, or a conservation easement on the land, to an accredited land trust, conservation organization or relevant government agency (a deed covenant is not sufficient to meet this requirement) for the purpose of long-term conservation.

Identify and commit to ongoing management activities, along with parties responsible for management and funding available, so that restored areas are maintained for a minimum of three years after the project is built out or the restoration is completed, whichever is later. The requirement for identifying ongoing management activities may also be met by earning SLL Credit Long-Term Conservation Management of Habitat or Wetlands and Water Bodies.

The project does not meet the requirements if it has negative effects on habitat for species identified in endangered species acts or habitat flagged for conservation in Option 1 of SLL Credit Site Design for Habitat or Wetland and Water Body Conservation.

SLL CREDIT: LONG-TERM CONSERVATION MANAGEMENT OF HABITAT OR WETLANDS AND WATER BODIES

ND
1 point
This credit applies to

- Neighborhood Development Plan
- Neighborhood Development

Intent
To conserve native plants, wildlife habitat, wetlands, and water bodies.

Requirements

ND PLAN, ND (SLL)

Create and commit to implementing a long-term (at least 10-year) management plan for existing or recently restored on-site native habitats, water bodies, or wetlands and their buffers, and create a guaranteed funding source for management.

Involve a qualified biologist or a professional from a natural resources agency or natural resources consulting firm in writing the management plan and conducting or evaluating the ongoing management.

The plan must include biological objectives consistent with habitat or water resource conservation, and it must identify the following:

- procedures and personnel for maintaining the conservation areas;
- estimated implementation costs and funding sources; and
- any threats that the project poses for habitat or water resources within conservation areas (e.g., introduction of exotic species, intrusion of residents in habitat areas) and measures to substantially reduce those threats.

The project does not meet the requirements if it has negative effects on habitat for species identified in endangered species acts or habitat flagged for conservation in Option 1 of SLL Credit Site Design for Habitat or Wetland and Water Body Conservation.

NEIGHBORHOOD PATTERN AND DESIGN (NPD)

NPD PREREQUISITE: WALKABLE STREETS
Required

ND
This prerequisite applies to

- Neighborhood Development Plan
- Neighborhood Development

Intent

To promote transportation efficiency and reduce vehicle distance traveled. To improve public health by providing safe, appealing, and comfortable street environments that encourage daily physical activity and avoid pedestrian injuries.

Requirements

ND PLAN, ND

Design and build the *project* to achieve all of the following:

a. 90% of new buildings have a *functional entry* onto the circulation network or other public space, such as a *park* or *plaza,* but not a parking lot. Whether opening to the circulation network or other public space, the functional entry must be connected to a sidewalk or equivalent provision for walking. If the public space is a square, park, or plaza, it must be at least 50 feet (15 meters) deep, measured at a point perpendicular to each entry.

b. At least 15% of the *block length* of the *existing* and new circulation networks within and bordering the project has a minimum building-height-to-street-centerline ratio of 1:1.5 (i.e., a minimum of 1 foot [300 millimeters] of building height for every 1.5 feet [450 millimeters] of width from street centerline to building façade). Alleys may be omitted from the calculations.

   - Projects that border a part of the circulation network must meet only their proportional share of the height-to-width ratio (i.e., only on the project side of the circulation network).

   - Building height is measured to eaves or, for a flat-roof structure, to the rooftop. For buildings with multiple heights or widths, use average heights or widths weighted by each portion's share of the total height or width.

c. Continuous sidewalks or equivalent *all-weather routes* for walking are provided along both sides of 90% of the circulation network block length within the project, including the project side of circulation network bordering the project. Bicycle- and pedestrian-only paths meet this requirement. New sidewalks must be at least 8 feet (2.5 meters) wide on retail or mixed-use blocks and at least 4 feet (1.2 meters) wide on all other blocks.

d. No more than 20% of the block length of the circulation network within the project is faced directly by garage and service bay openings. Alleys may be omitted from the calculations.

Portions of projects containing *historic buildings* or contributing buildings in a designated *historic district* subject to review by a local historic preservation entity are exempt from (b), (c), and (d) if approval for compliance is not granted.

Portions of projects containing historic buildings or contributing buildings in historic districts listed in or eligible for listing in a state provincial, or regional register, or the National Register of Historic Places that are subject to review by a state historic preservation office or the National Park Service (or local equivalent for projects outside the U.S.) are exempt from (b), (c), and (d) if approval for compliance is not granted.

NPD PREREQUISITE: COMPACT DEVELOPMENT
Required

ND
This prerequisite applies to

- Neighborhood Development Plan
- Neighborhood Development

Intent

To conserve land. To promote livability, walkability, and transportation efficiency and reduce vehicle distance traveled. To leverage and support transit investments. To improve public health by encouraging daily physical activity.

Requirements

ND PLAN, ND

Design and build the project to meet the densities specified below. Minimum densities must be met for both (1) the entire project at full build-out and (2) the portion of the project that will be built within five years of the date that the first new building of any type is occupied.

Case 1. Projects with Access to Quality Transit
For *projects* with *existing* or planned transit service (i.e., service with the funding commitments as specified in SLL Prerequisite Smart Location) that meets or exceeds the 2-point threshold in SLL Credit Access to Quality Transit, build at the following densities, based on the *walking distances* to the transit service specified in that SLL credit:

- for residential components located within the walking distances: 12 or more *dwelling units* per acre (30 DU per hectare) of buildable land available for residential uses;
- for residential components falling outside the walking distances: 7 or more dwelling units per acre (17.5 DU per hectare) of buildable land available for residential uses;
- for nonresidential components located within the walking distances: 0.80 or higher *floor-area ratio* (FAR) for the buildable land available for nonresidential uses; and
- for nonresidential components falling outside the walking distances: 0.50 or higher FAR for the buildable land available for nonresidential uses.

If the project location is served by a transit agency whose guidelines for minimum service densities are greater than the densities required by this prerequisite, the project must achieve those service densities instead.

Case 2. All Other Projects
Build any residential components of the project at a *density* of 7 or more dwelling units per acre (17.5 DU per hectare) of *buildable land* available for residential uses.

Build any nonresidential components of the project at a density of 0.50 or higher FAR for the buildable land available for nonresidential uses.

For All Projects Density calculations include all planned and existing buildings within the *project boundary,* excluding those portions of parking structures devoted exclusively to parking.

If the residential component of the project meets the minimum density requirement but the nonresidential component does not, or vice versa, include only the qualifying density. Use that component's dwelling units or nonresidential floor area in the numerator and the total buildable land area in the denominator. If the resulting density meets the minimum requirement, the prerequisite is achieved.

NPD PREREQUISITE: CONNECTED AND OPEN COMMUNITY
Required

ND
This prerequisite applies to

- Neighborhood Development Plan
- Neighborhood Development

Intent

To promote *projects* that have high levels of internal connectivity and are well connected to the community. To encourage development within *existing* communities that promote transportation efficiency through multimodal transportation. To improve public health by encouraging daily physical activity.

Requirements

ND PLAN, ND

Meet the requirements of Case 1 if the project has no circulation network intersections within the project boundary and is five acres or less in size. All other projects must meet Case 2.

Case 1. Surrounding Connectivity
Locate the project such that the connectivity within ¼ mile (400 meters) of the project boundary is at least 90 intersections per square mile (35 intersections per square kilometer). Any part of the circulation network that is counted toward the connectivity requirement must be available for general public use and not gated. Gated areas are not considered available for public use, with the exception of education and health care campuses and military bases where gates are used for security purposes.

Additionally, any circulation network within the project must be available for general public use and not gated.

Case 2. Internal Connectivity
Design and build the project such that its internal *connectivity* is at least 140 intersections per square mile (54 intersections per square kilometer).

Any part of the circulation network counted toward the connectivity requirement must be available for general public use at all times and not gated. Additionally, no more than 10% of the project area may be accessed via circulation network that is gated. Education campuses, health care campuses, and military bases where gates are used for security purposes are exempt from the 10% limit, and intersections within those projects may be counted toward the connectivity requirement.

Design and build the project with at least one through-connection (of the circulation network) intersecting or terminating at the *project boundary* at least every 800 feet (245 meters), or at existing abutting intervals and intersections of the circulation network, whichever is the shorter distance. These requirements do not apply to portions of the boundary where connections cannot be made because of physical obstacles, such as prior platting of property, construction of existing buildings or other barriers, slopes steeper than 15%, *wetlands* and *water bodies,* railroad and utility rights-of-way, existing limited-access motor vehicle rights-of-way, and parks and dedicated open space.

NPD CREDIT: WALKABLE STREETS

ND
1–9 points
This credit applies to

- Neighborhood Development Plan
- Neighborhood Development

Intent

To promote transportation efficiency and reduce *vehicle distance traveled.* To improve public health by providing safe, appealing, and comfortable *street* environments that encourage daily physical activity and avoid pedestrian injuries.

Requirements

ND PLAN, ND

A *project* may earn a maximum of 9 points, awarded according to Table 1.

Table 1. Points for walkable street features

Items achieved	*Points*
2–3	1
4–5	2
6–7	3
8–9	4
10–11	5
12	6
13	7
14	8
15–16	9

Façades and Entries

a. At least 80% of the total linear distance of building façades facing the circulation network in the project is no more than 25 feet (7.5 meters) from the property line.

b. At least 50% of the total linear distance of building façades facing the circulation network in the project is no more than 18 feet (5.5 meters) from the property line.

c. At least 50% of the total linear distance of mixed-use and nonresidential building façades facing the circulation network in the project is within 1 foot (300 millimeters) of a sidewalk or equivalent walking route.

d. *Functional entries* to the building occur at an average of 75 feet (23 meters) or less along nonresidential or mixed-use buildings or *blocks.*

e. Functional entries to the building occur at an average of 30 feet (9 meters) or less along nonresidential or mixed-use buildings or blocks

Items (d) and (e) are cumulative.

Ground-Level Use and Parking

f. All ground-level retail, service, and trade uses that face a public space have clear glass on at least 60% of their façades between 3 and 8 feet (900 and 2500 millimeters) above grade.

g. If a façade extends along a sidewalk, no more than 40% of its length or 50 feet (15 meters), whichever is less, is blank (without doors or windows).

h. Any ground-level retail, service, or trade windows facing the circulation network must be kept visible (unshuttered) at night; this must be stipulated in *covenants, conditions, and restrictions* (CC&Rs) or other binding documents.

i. On-street parking is provided on at least 70% of both sides of the block length of all new and *existing* motorized portions of the circulation network, including the project side of bordering circulation network. The percentage of on-street parking is calculated by dividing the length of street designated for parking by the total length of the curb along each street, including curb cuts, driveways, and intersection radii. Space within the parking lane that is occupied by corner bulb-outs (within 24 feet [7 meters] of an intersection), transit stops, and motorcycle or bicycle parking may be counted as designated for parking in this calculation. Alleys may be exempted.

j. Continuous sidewalks or equivalent provisions for walking are available along both sides of the entire circulation network within the project, including the project side of the circulation network bordering the project. Bicycle- and pedestrian-only paths meet this requirement. New sidewalks must be at least 10 feet (3 meters) wide on retail or mixed-use blocks and at least 5 feet (1.5 meters) wide on all other blocks. Note that these requirements specify wider sidewalks than required by NPD Prerequisite Walkable Streets. Alleys may be exempted.

k. If the project has ground-floor *dwelling units,* the principal level of at least 50% of those units has an elevated finished floor at least 24 inches (60 centimeters) above the sidewalk grade. Below-grade basement spaces and/or *accessory dwelling units* are exempt from this requirement.

l. In nonresidential or mixed-use projects, 50% or more of the total number of office buildings includes ground-floor retail along 60% of the length of the street-level façade; 100% of mixed-use buildings include ground-floor retail, live-work spaces, or ground-floor dwelling units along at least 60% of the street-level façade; and all businesses or community services on the ground floor are accessible directly from sidewalks along the circulation network or other public space, such as a square, park, or plaza, but not a parking lot.

m. At least 40% of the block length of the circulation network within the project has a minimum building-height-to-street-centerline ratio of 1:1.5 (i.e., at least 1 foot (30 centimeters) of building height for every 1.5 feet (45 centimeters) of width from *circulation network* centerline to building façade). Alleys may be exempted.

Projects that border a part of the circulation network must meet only their proportional share of the height-to-centerline ratio (i.e., only on the project side of the circulation network).

Building height is measured to eaves or, for a flat-roof structure, to the rooftop, and width is measured façade to centerline. For buildings with multiple heights or widths, use average heights or widths weighted by each portion's share of the total height or width.

Design Speeds for Safe Pedestrian and Bicycle Travel

n. 75% of the length of new residential-only motorized parts of the circulation network within the project is designed for a target speed of no more than 20 mph (30 km/h).

o. 70% of the length of new nonresidential or mixed-use motorized parts of the circulation network within the project is designed for a target speed of no more than 25 mph (40km/h). A multiway boulevard, with travel lanes separated from access lanes by medians, may apply this requirement to its outer access lanes only (through-lanes are exempt), provided pedestrian crosswalks are installed across the boulevard at intervals no greater than 800 feet (245 meters).

Sidewalk Intrusions

p. At-grade crossings with driveways account for no more than 10% of the length of sidewalks within the project.

NPD CREDIT: COMPACT DEVELOPMENT

ND
1–6 points
This credit applies to

- Neighborhood Development Plan
- Neighborhood Development

Intent

To conserve land and protect farmland and wildlife habitat by encouraging development in areas with existing infrastructure. To promote livability, walkability, and transportation efficiency, and reduce vehicle distance traveled. To improve public health by encouraging daily physical activity.

Requirements

ND PLAN, ND

Design and build the *project* such that residential and nonresidential components achieve the *densities* per acre (per hectare) of *buildable land* listed in Table 1 at build-out or within five years of the date that the first new building of any type is occupied (excluding those portions of parking structures devoted to parking), whichever is lower.

Table 1. Points for density per acre (hectare) of buildable land

Residential density		Nonresidential density (FAR)	Points
DU/acre	DU/hectare		
> 10 and ≤ 13	> 25 and ≤ 32	> 0.75 and ≤ 1.0	1
> 13 and ≤ 18	> 32 and ≤ 45	> 1.0 and ≤ 1.25	2
> 18 and ≤ 25	> 45 and ≤ 62	> 1.25 and ≤ 1.75	3
> 25 and ≤ 38	> 62 and ≤ 94	> 1.75 and ≤ 2.25	4
> 38 and ≤ 63	> 94 and ≤ 156	> 2.25 and ≤ 3.0	5
> 63	> 156	> 3.0	6

DU = dwelling unit; FAR = floor-area ratio.

The scoring of a mixed-use project is calculated with a weighted average, according to the following steps.

1. Determine the total floor area of all residential and nonresidential uses.
2. Calculate the percentage residential and percentage nonresidential of the total floor area.
3. Determine the density of each component as measured in *dwelling units* per acre or hectare and *floor-area ratio,* respectively.
4. Referring to Table 1, find the appropriate points for the densities of the residential and nonresidential components.
5. If the points are different, multiply the point value of the residential component by its percentage of the total floor area and multiply the point value of the nonresidential component by its percentage.
6. Add the two scores.

NPD CREDIT: MIXED-USE NEIGHBORHOODS

ND
1–4 points
This credit applies to

- Neighborhood Development Plan
- Neighborhood Development

Intent

To reduce vehicle distance traveled and automobile dependence, encourage daily walking, biking, and transit use, and support car-free living by providing access to diverse land uses.

Requirements

ND PLAN, ND

Locate or design the *project* such that 50% of its *dwelling units* are within a 1/4-mile (400-meter) *walking distance* of the number of uses (see Appendix 1) listed in Table 1. For projects with no dwelling units, 50% of dwelling units within a 1/4-mile (400-meter) walking distance of the *project boundary* must be within a 1/4-mile (400-meter) walking distance of the number of uses within the project specified in Table 1.

The specified number of uses must be in place by the time of 50% occupancy of total building floor area (exclusive of portions of parking structures devoted to parking).

Table 1. Points for uses within 1/4-mile (400-meter) walking distance, by percentage of occupancy

Diverse uses		*Points*
4–7		1
8–11		2
12–19		3
≥ 20		4

The following restrictions apply.

- A use may be counted as only one use type (e.g., a retail store may be counted only once even if it sells products in several categories).
- No more than two uses in each use type may be counted (e.g., if five restaurants are within the required distance, only two may be counted).
- The uses accessible to each counted dwelling unit must represent at least two categories.

For projects with regional-serving retail of 150,000 or more square feet (13 935 square meters) only

Additionally, a project that has at least one large retail *use (*defined as a use totaling 75,000 or more square feet [7 000 or more square meters]), must also meet at least the 2-point threshold for transit service under SLL Credit Access to Quality Transit. In this case, planned transit service can be counted. Each large retail use must be served by at least one transit stop providing trips that qualify under that SLL Credit.

If transit service is planned but not yet operational, the project must demonstrate one of the following:

1. The relevant transit agency has a signed full-funding grant agreement with the Federal Transit Administration (or equivalent national agency for projects outside the U.S.) that includes a revenue operations date for the start of transit service. The revenue operations date must be no later than the day by which 50% of the project's total building floor area will be occupied.
2. For bus, *streetcar*, *bus rapid transit,* or ferry service, the transit agency must certify that it has an approved budget that includes specifically allocated funds sufficient to provide the planned service at

the levels listed above and that service at these levels will begin no later than the day by which 50% of the project's total building floor area will be occupied.

3. For rail service other than *streetcars*, the transit agency must certify that preliminary engineering for a rail line has begun. In addition, the service must meet either of these two requirements:

- A state legislature or local subdivision of the state (or local government for projects outside the U.S.) has authorized the transit agency to expend funds to establish rail transit service that will begin no later than the date by which 50% of the project's total building floor area will be occupied.

  OR

- A local government has dedicated funding or reimbursement commitments from future tax revenue for the development of stations, platforms, or other rail transit infrastructure that will serve the project no later than the date by which 50% of the project's total building floor area will be occupied.

NPD CREDIT: HOUSING TYPES AND AFFORDABILITY

ND
1–7 points
This credit applies to

- Neighborhood Development Plan
- Neighborhood Development

Intent

To promote socially equitable and engaging neighborhoods by enabling residents from a wide range of economic levels, household sizes, and age groups to live in a community.

Requirements

ND PLAN, ND

Meet the requirements of one or more of the following options.

Option 1. Diversity of Housing Types (1–3 points)

Include a sufficient variety of housing sizes and types in the *project* such that the total variety of planned and *existing* housing within the project achieves a Simpson Diversity Index score greater than 0.5, using the housing categories below. Projects of less than 125 acres (50.5 hectares) may calculate the Simpson Diversity Index for the area within ¼ mile (400 meters) of the project's geographic center. The Simpson Diversity Index calculates the probability that any two randomly selected *dwelling units* in a project will be of a different type.

Score = $1 - \sum (n/N)^2$

Where
n = the total number of dwelling units in a single category, and
N = the total number of dwelling units in all categories.

Table 1. Points for housing diversity

Simpson Diversity Index score	*Points*
> 0.5 to < 0.6	1
≥ 0.6 to < 0.7	2
≥ 0.7	3

Housing categories are defined by the dwelling unit's net floor area, exclusive of any garage, as listed in Table 2.

Table 2. Housing categories

Type	Square feet	Square meters
Detached residential, large	> 1,250	> 116
Detached residential, small	≤ 1,250	≤ 116
Duplex or townhouse, large	> 1,250	> 116
Duplex or townhouse, small	≤ 1,250	≤ 116
Dwelling unit in multiunit building with no elevator, large	> 1,250	> 116
Dwelling unit in multiunit building with no elevator, medium	> 750 to ≤ 1,250	> 70 to ≤ 116
Dwelling unit in multiunit building with no elevator, small	≤ 750	≤ 70
Dwelling unit in multiunit building with elevator, 4 stories or fewer, large	> 1,250	> 116
Dwelling unit in multiunit building with elevator, 4 stories or fewer, medium	> 750 to ≤ 1,250	> 70 to ≤ 116

Dwelling unit in multiunit building with elevator, 4 stories or fewer, small	≤ 750	≤ 70
Dwelling unit in multiunit building with elevator, 5 to 8 stories, large	> 1,250	> 116
Dwelling unit in multiunit building with elevator, 5 to 8 stories, medium	> 750 to ≤ 1,250	> 70 to ≤ 116
Dwelling unit in multiunit building with elevator, 5 to 8 stories, small	≤ 750	≤ 70
Dwelling unit in multiunit building with elevator, 9 stories or more, large	> 1,250	> 116
Dwelling unit in multiunit building with elevator, 9 stories or more, medium	> 750 to ≤ 1,250	> 70 to ≤ 116
Dwelling unit in multiunit building with elevator, 9 stories or more, small	≤ 750	≤ 70
Live-work space, large	> 1,250	> 116
Live-work space, small	≤ 1,250	≤ 116
Accessory dwelling unit, large	> 1,250	> 116
Accessory dwelling unit, small	≤ 1,250	≤ 116

For the purposes of this credit, townhouse and live-work units may have individual ground-level entrances or be within a multiunit or mixed-use building. Double counting is prohibited; each dwelling may be classified in only one category. The number of stories in a building is inclusive of the ground floor regardless of its use.

AND/OR

Option 2. Affordable Housing (1–3 points)

Include a proportion of new rental and/or for-sale dwelling units priced for households earning less than the *area median income* (AMI). Rental units must be maintained at affordable levels for a minimum of 15 years. Existing dwelling units are exempt from requirement calculations. Meet any combination of thresholds in Table 3, up to a maximum of 3 points.

Table 3. Points for affordable housing

Rental dwelling units				*For-sale dwelling units*			
Priced up to 60% AMI		*Priced up to 80% AMI*		*Priced up to 100% AMI*		*Priced up to 120% AMI*	
Percentage of total rental units	*Points*	*Percentage of total rental units*	*Points*	*Percentage of total for-sale units*	*Points*	*Percentage of total for-sale units*	*Points*
5	1	10	1	5	1	8	1
10	2	15	2	10	2	12	2
15	3	25	3	15	3	—	—

AMI = area median income.

AND/OR

Option 3. Housing Types and Affordable Housing (1 point)

A project may earn an additional point by earning at least 2 points in Option 1 and at least 2 points in Option 2 (at least one of which must be for providing housing at or below 100% AMI).

LT CREDIT: REDUCED PARKING FOOTPRINT

ND
1 point
This credit applies to

- Neighborhood Development Plan
- Neighborhood Development

Intent

To minimize the environmental harms associated with parking facilities, including automobile dependence, land consumption, and rainwater runoff.

Requirements

ND PLAN, ND

For new nonresidential buildings and *multiunit residential* buildings, either do not build new off-street parking lots, or locate all new off-street surface parking lots at the side or rear, leaving building frontages facing the circulation network free of surface parking lots (alleys may be exempted).

Use no more than 20% of the total *development footprint* area for all new off-street surface parking facilities, with no individual surface parking lot larger than 2 acres (0.8 hectare). For the purposes of this credit, surface parking facilities include ground-level garages unless they are under *habitable building* space. Underground or multistory parking facilities can be used to provide additional spaces. On-street parking spaces are exempt from this limitation.

Provide preferred parking for carpool or shared-use vehicle parking spaces equivalent to at least 10% of the total off-street parking spaces for each nonresidential and mixed-use building on the site. Such parking spaces must be marked and within 200 feet (60 meters) walking distance of entrances to the building served.

NPD CREDIT: CONNECTED AND OPEN COMMUNITY

ND
1–2 points
This credit applies to

- Neighborhood Development Plan
- Neighborhood Development

Intent

To conserve land and promote multimodal transportation by encouraging development within existing communities that have high levels of internal connectivity and are well connected to the larger community. To improve public health by encouraging daily physical activity and reducing motor vehicle emissions.

Requirements

ND PLAN, ND
Locate or design the project such that its internal *connectivity* falls within one of the ranges listed in Table 1. If the project has no internal circulation network, the connectivity within a ¼-mile (400-meter) distance of the project boundary must be used.

Table 1. Points for connectivity

Intersections per square mile	Intersections per square kilometer	Points
300–400	116–154	1
> 400	> 154	2

All parts of the circulation network that are counted toward the connectivity requirement must be available for general public use at all times and not gated. No more than 10% of the project area may be accessed via circulation network that is gated. Education campuses, health care campuses, and military bases where gates are used for security purposes are exempt from the 10% limit, and intersections within those projects may be counted toward the connectivity requirement.

AND

Design or locate the project such that a through-connection (of the circulation network) intersects or terminates at the *project boundary* at least every 400 feet (122 meters) or at existing abutting intervals and intersections of the circulation network, whichever is the shorter distance. Include a pedestrian or bicycle through-connection in at least 90% of any new *culs-de-sac.* These requirements do not apply to portions of the boundary where connections cannot be made because of physical obstacles, such as prior platting of property, construction of existing buildings or other barriers, slopes steeper than 15%, *wetlands* and *water bodies,* railroad and utility rights-of-way, existing limited-access motor vehicle rights-of-way, and parks and dedicated open space.

NPD CREDIT: TRANSIT FACILITIES

ND
1 point
This credit applies to

- Neighborhood Development Plan
- Neighborhood Development

Intent

To encourage transit use and reduce vehicle distance traveled by providing safe, convenient, and comfortable transit waiting areas.

Requirements

ND PLAN, ND

Work with the transit agency or agencies serving the *project* to inventory existing transit stops and new transit stops within the project boundary that will be warranted within two years of project completion (because of either increased ridership on existing service or planned transit).

At those locations,

1. Confirm that transit facilities will be funded by either the transit agency or the project developer.

2. Install transit agency-approved shelters and any other required improvements at existing stops. Reserve space for transit facilities or install transit facilities at new stops.

Shelters must be covered, be at least partially enclosed to buffer wind and rain, have seating and illumination, and have signage that display transit schedules and route information.

NPD CREDIT: TRANSPORTATION DEMAND MANAGEMENT

ND
2 points
This credit applies to

- Neighborhood Development Plan (1-2 points)
- Neighborhood Development (1-2 points)

Intent

To reduce energy consumption, pollution, and harm to human health from motor vehicles by encouraging multimodal travel.

Requirements

ND PLAN, ND

Achieve at least two of the following options.

Earn 1 point for every two options, for a maximum of 2 points. For the purposes of this credit, *existing* buildings and their occupants are exempt from the requirements.

Option 1. Transit Passes

Provide transit passes valid for at least one year, subsidized to 100% of regular price, to each resident and employee locating within the project during the first three years of project occupancy (or longer). Publicize the availability of subsidized transit passes to project occupants.

AND/OR

Option 2. Developer-Sponsored Transit

Provide year-round, *developer*-sponsored transit service (vans, shuttles, buses) from at least one central point in the project to other major transit facilities or to other destinations, such as a retail or *employment center,* with service no less frequent than 45 daily weekday trips and 30 daily weekend trips. The service must begin by the time the project's total floor area is 20% occupied and must be guaranteed for at least three years beyond project build-out. The occupancy requirement is met when residents are living in 20% of the *dwelling units* and/or employees are working in 20% of the total nonresidential floor area.

Provide transit stop shelters and bicycle racks adequate to meet projected demand but no less than one shelter and one bicycle rack at each transit stop. Shelters must be covered, be at least partially enclosed to buffer wind and rain, and have seating and illumination. Bicycle racks must have a two-point support system for locking the frame and wheels and must be securely affixed to the ground or a building.

AND/OR

Option 3. Vehicle Sharing

Locate the project such that 50% of the dwelling units and nonresidential use entrances are within a ¼-mile (400-meter) *walking distance* of at least one vehicle in a vehicle-sharing program, as specified below, depending on project size.

- If the project has fewer than 100 dwelling units and/or employees, provide one vehicle.
- If the project has more than 100 dwelling units and/or employees and has a minimum transit service of 60 daily weekday trips and 40 daily weekend trips, provide at least one additional vehicle and parking space for every 100 dwelling units and/or employees.

- If the project has more than 100 dwelling units and/or employees but does not have transit service at the frequencies specified above, provide at least one additional vehicle and parking space for every 200 dwelling units and/or employees.

For each vehicle, dedicate one parking space accessible to vehicle-sharing members. Publicize to project occupants the availability and benefits of the vehicle-sharing program. Commit to providing vehicles to the locations for at least two years. If a new vehicle-sharing location is planned, the vehicle-sharing program must begin by the time the project's total floor area is 20% occupied. The occupancy requirement is met when residents are living in 20% of the dwelling units and/or employees are working in 20% of the total nonresidential floor area.

AND/OR

Option 4. Unbundling of Parking and Parking Fees

For 90% of multiunit residential units and/or nonresidential floor area, the associated parking spaces must be sold or rented separately from the dwelling units or nonresidential floor area.

Set parking fees within the project boundary for all off-street parking equal to or greater than the cost of monthly usage for public transit. Off-street parking in this instance does not include parking devoted to individual, detached residential units.

AND/OR

Option 5. Guaranteed Ride Home Program

Major employers within the project must commit to providing a guaranteed ride home program for employees. A major employer accounts for more than 25% of the workers on the project site. The program must provide free rides to employees who have carpooled, taken transit, walked, or cycled to work but must leave because of an unexpected personal emergency. Rides may be on taxis, company cars, or rental cars.

AND/OR

Option 6. Flexible Work Arrangements

Major employers within the project must commit to promoting and supporting flexible work arrangements with the goal of reducing vehicle trips during peak commuting hours. A major employer accounts for more than 25% of the workers on the project site. The employer must develop internal policies that outline the terms under which employees can engage in telework, flextime, compressed work weeks, staggered shifts, or other arrangements. These policies must also describe how the program will be promoted to employees.

NPD CREDIT: ACCESS TO CIVIC AND PUBLIC SPACE

ND
1 point
This credit applies to

- Neighborhood Development Plan
- Neighborhood Development

Intent

To provide open space close to work and home that enhances community participation and improves public health.

Requirements

ND PLAN, ND

Locate 90% of planned and *existing dwelling units* and nonresidential use entrances within a ¼ mile (400 meters) walk of at least one civic and passive use space. The spaces must be at least 1/6 acre (0.067 hectare) in area. Spaces less than 1 acre (0.4 hectare) must have a proportion no narrower than 1 unit of width to 4 units of length.

Projects larger than 10 acres (4 hectares) must have a median space size of at least 1 acre (0.4 hectare). Spaces over ½ acre (0.2 hectare) that are used to meet the 90% threshold are included in the median calculation.

NPD CREDIT: ACCESS TO RECREATION FACILITIES

ND
1 point
This credit applies to

- Neighborhood Development Plan
- Neighborhood Development

Intent

To enhance community participation and improve public health by providing recreational facilities close to work and home that facilitate physical activity and social networking.

Requirements

ND PLAN, ND

Locate or design the *project* so that a publicly accessible outdoor recreation facility at least 1 acre (0.4 hectares) in area, or a publicly accessible indoor recreational facility of at least 25,000 square feet (2325 square meters), lies within a ½-mile (800-meter) *walking distance* of 90% of new and *existing dwelling units* and nonresidential use entrances. Outdoor recreation facilities must consist of physical improvements and may include “tot lots,” swimming pools, and sports fields, such as baseball diamonds.

NPD CREDIT: VISITABILITY AND UNIVERSAL DESIGN

ND
1 point
This credit applies to

- Neighborhood Development Plan
- Neighborhood Development

Intent
To increase the proportion of areas usable by a wide spectrum of people, regardless of age or ability.

Requirements

ND PLAN, ND

Case 1. Projects with New Dwelling Units (1 point)

Design a minimum of 20% of the new dwelling units (but not less than one dwelling unit per type) in accordance with ICC A117.1, Type C, Visitable Unit, for each of the following residential building types:

- detached single-dwelling-unit buildings;
- attached single-dwelling-unit buildings; and
- buildings with two or three dwelling units.

Each unit must also have a kitchen, living area, bedroom, and full bath on an accessible level.

For multiunit buildings with four or more dwelling units, design a minimum of 20% of the units (but not less than one) to meet the requirements of one of the following options. This category includes mixed-use buildings with dwelling units.

Option 1. Universal Design Features Throughout the Home (1 point)
Throughout the home, include at least five of the following universal design features:

- easy-to-grip lever door handles;
- easy-to-grip cabinet and drawer loop handles;
- easy-to-grip locking mechanisms on doors and windows;
- easy-to-grip single-lever faucet handles;
- easy-touch rocker or hands-free switches;
- motion-detector lighting at entrance, in hallways and stairwells, and in closets, and motion-detector light switches in garages, utility spaces, and basements;
- large, high-contrast print for controls, signals, and the house or unit numbers;
- a built-in shelf, bench, or table with knee space below, located outside the entry door with weather protection overhead, such as porch or stoop with roof, awning, or other overhead covering;
- a minimum 32-inch (80-centimeter) clear door opening width for all doorways;
- tread at the entrance, on stairs, and other areas where slipping is common, with color contrast difference between stair treads and risers; and
- interior floor surfaces (e.g., low-pile carpets, hard-surface flooring) that provide easy passage for a wheelchair or walker, with color contrast between floor surfaces and trim; no carpet is permitted in a kitchen, bathroom, or other wet areas of the dwelling unit.

OR

Option 2. Kitchen Features (1 point)
On the main floor of the home (or on another floor, if an elevator or stair lift is provided), provide a kitchen with hard-surface flooring, plumbing with single-lever controls, a 5-foot (1.5-meter) turning radius, and at least four of the following universal design features:

- variable-height (28- to 42-inch [70- to 110-centimeter]) or adjustable work surfaces, such as countertops, sinks, and cooktops;
- clear knee space under sink and cooktops (this requirement can be met by installing removable base cabinets or fold-back or self-storing doors), cooktops and ranges with front or side-mounted controls, and wall-mounted ovens at a height to accommodate a seated adult;
- a toe kick area at the base of lower cabinets with a minimum height of 9 inches (23 centimeters), and full-extension drawers and shelves in at least half (by volume) of the cabinets;
- contrasting color treatment between countertops, front edges, and floor;
- adjustable-height shelves in wall cabinets; and
- glare-free task lighting.

OR

Option 3. Bedroom and Bathroom Features (1 point)
On the main floor of the building (or on another floor, if an elevator or stair lift is provided), include all of the following:

In at least one accessible bedroom,

- Size the room to accommodate a twin bed with a 5-foot (1.5-meter) turning radius around the bed.
- Install a clothes closet with a 32-inch (80-centimeter) clear opening with adjustable-height closet rods and shelves.

In at least one full bathroom on the same floor as the bedroom,

- Provide adequate maneuvering space with a 30-by-48-inch (75-by-120 centimeter) clear floor space at each fixture.
- Center the toilet 18 inches (45 centimeters) from any side wall, cabinet, or tub, and allow a 3-foot (90-centimeter) clear space in front.
- Install broad blocking in walls around toilet, tub, and/or shower for future placement and relocation of grab bars.
- Provide knee space under the lavatory (this requirement may be met by installing removable base cabinets or fold-back or self-storing doors).
- Install a long mirror whose bottom is no more than 36 inches (90 centimeters) above the finished floor and whose top is at least 72 inches (180 centimeters) high.

In addition, all bathrooms must have hard-surface flooring, all plumbing fixtures must have single-lever controls, and tubs or showers must have hand-held showerheads.

Case 2. Projects With Noncompliant Routes and No New Dwelling Units (1 point)
This case applies to projects that have no new residential units and are either (1) retrofitting existing public rights-of-way or publicly accessible travel routes that are not in compliance with the Americans with Disabilities Act (ADA, for private sector and local and state government facilities) or the Architectural Barriers Act (ABA, for federally funded facilities), or (2) building new publicly accessible travel routes that are not legally required to meet ADA-ABA accessibility guidelines.

Design, construct, or retrofit 90% of the rights-of-way and travel routes in accordance with the ADA-ABA accessibility guidelines, as applicable, or local equivalent for projects outside the U.S., whichever is more stringent.

NPD CREDIT: COMMUNITY OUTREACH AND INVOLVEMENT

ND
1–2 points
This credit applies to

- Neighborhood Development Plan
- Neighborhood Development

Intent

To encourage responsiveness to community needs by involving the people who live or work in the community in *project* design and planning and in decisions about how the project should be improved or changed over time.

Requirements

ND PLAN, ND

Option 1. Community Outreach (1 point)

Engage the community in the following ways. Each activity must be led by the development team and be directly related to the LEED ND project.

Predesign
Meet with adjacent property owners, residents, business owners, and workers; local planning and community development officials; and any current residents or workers at the project site to solicit and document their input on the proposed project before beginning design.

Preliminary design
Advertise and host at least one open community meeting other than an official public hearing or recurring citizen advisory meeting, to generate comments on the preliminary project design concept. Work directly with community associations and/or the local government to advertise the meeting(s). Collect and summarize comments generated at the meeting(s).

Modify the project's preliminary design as a direct result of community input, or if modifications are not made, explain why community input did not generate design modifications.

Ongoing communication
Establish ongoing means for communication between the *developer* and the community throughout the design and construction phases and, in cases where the developer maintains any control, after construction.

OR

Option 2. Charrette (2 points)

Comply with Option 1 and conduct a design charrette or interactive workshop of at least two days that is open to the public and includes, at a minimum, participation by a representative group of nearby property owners, residents, business owners, and workers in the preparation of conceptual project plans and drawings.

OR

Option 3. Endorsement Program (2 points)

Comply with Option 1 and obtain an endorsement from an ongoing local or regional nongovernmental program that systematically reviews and endorses smart growth development projects under a rating or jury system.

NPD CREDIT: LOCAL FOOD PRODUCTION

ND
1 point
This credit applies to

- Neighborhood Development Plan
- Neighborhood Development

Intent

To promote the environmental and economic benefits of community-based food production and improve nutrition through better access to fresh produce.

Requirements

ND PLAN, ND

Establish *covenants, conditions, and restrictions* (CC&R) or other forms of deed restrictions stating that the growing of produce is not prohibited in *project* areas, including greenhouses, any portion of residential front, rear, or side yards; or balconies, patios, or rooftops. Greenhouses but not gardens may be prohibited in front yards that face the *circulation network.*

Meet the requirements of one of the following three options.

Option 1. Neighborhood Gardens (1 point)

Dedicate permanent and viable growing space or related facilities (such as greenhouses) within the project as specified in Table 1 (exclusive of *existing* dwellings). Ensure solar access and provide fencing, watering systems, garden bed enhancements (such as raised beds), secure storage space for tools, and pedestrian access for these spaces. Ensure that the spaces are owned and managed by an entity that includes occupants of the project in its decision making, such as a community group, homeowners association, or public body.

Table 1. Minimum garden space, by project density

Imperial units		*Metric units*	
Project density (DU/acre)	*Growing space (sf/DU)*	*Project density (DU/hectare)*	*Growing space (sq. meters/DU)*
> 7 and ≤14	200	> 17.5 and ≤ 35	18.5
> 14 and ≤ 22	100	> 35 and ≤ 55	9
> 22 and ≤ 28	80	> 55 and ≤ 69	7.5
> 28 and ≤ 35	70	> 69 and ≤ 87	6.5
> 35	60	> 87	5.5

DU = dwelling unit; sf = square feet; sq. meters = square meters.

An established community garden outside the *project boundary* but within a ½-mile (800-meter) *walking distance* of the project's geographic center can satisfy this option if the garden otherwise meets all the requirements.

OR

Option 2. Community-Supported Agriculture (1 point)

Purchase shares in a *community-supported agriculture* program located within 150 miles (240 kilometers) of the project site for at least 80% of *dwelling units* within the project (exclusive of existing dwelling units). Each counted dwelling unit must receive CSA service for at least two years, beginning when it is occupied. Shares must be delivered to a point within 1/2 mile (800 meters) of the project's geographic center on a regular schedule not less than twice per month at least four months of the year.

OR

Option 3. Proximity to Farmers Market (1 point)

Locate the project's geographic center within a 1/2-mile (800-meter) walking distance of an existing or planned farmers market that is open or will operate at least once weekly for at least five months annually. Farmers market vendors may sell only items grown within 150 miles (240 kilometers) of the project site. A planned farmers market must have firm commitments from farmers and vendors that the market will meet all the above requirements and be in full operation by the time 50% of the project's total floor area is occupied.

NPD CREDIT: TREE-LINED AND SHADED STREETSCAPES

ND
1–2 points
This credit applies to

- Neighborhood Development Plan
- Neighborhood Development

Intent

To encourage walking and bicycling and discourage speeding. To reduce urban heat island effects, improve air quality, increase evapotranspiration, and reduce cooling loads in buildings.

Requirements

ND PLAN, ND

Option 1. Tree-Lined Blocks (1 point)

Provide trees at intervals of no more than 50 feet (12 meters) (exempting driveways) along at least 60% of the total existing and planned block length within the project, and on the project side of blocks bordering the project, between the vehicle travel way (if there is one) and walkway. Alleys may be exempted from the block length calculations.

AND/OR

Option 2. Shaded Sidewalks (1 point)

Provide shade from trees or permanent structures over at least 40% of the total length of existing and planned sidewalks within or bordering the project (alleys may be exempted). Trees must provide shade within 10 years of landscape installation. Use the estimated crown diameter to calculate the length of sidewalk shaded.

AND

For All Projects with Street Tree Plantings

From a registered landscape architect (or local equivalent for projects outside the U.S.), obtain a determination that planting details are appropriate to growing healthy trees, taking into account tree species, root medium, and width and soil volume of planter strips or wells, and that the selected tree species are not considered *invasive* in the project context according to USDA or the state agricultural extension service (or local equivalent for projects outside the U.S.).

NPD CREDIT: NEIGHBORHOOD SCHOOLS

ND
1 point
This credit applies to

- Neighborhood Development Plan
- Neighborhood Development

Intent

To promote community interaction and engagement by integrating *schools* into the neighborhood. To improve students' health by encouraging walking and bicycling to school.

Requirements

ND PLAN, ND

Include in the *project* a residential component that constitutes at least 30% of the project's total building floor area, and locate or design the project such that at least 50% of the *dwelling units* are within a ½-mile (800-meter) *walking distance* of the functional building entry of an *existing* or new elementary or middle school or within a 1-mile (1600-meter) walking distance of the functional building entry of an existing or new high school. If the school combines an elementary or middle school with a high school, 50% of the dwelling units must be a ½ mile (800 meter) walking distance of the functional building entry.

For any new school, the school authority must commit that the school will be open by the time 50% of the project dwelling units are occupied. A legally binding warrant committing to open the school by this time must be provided at the time of first building occupancy.

Portions of the circulation network within or bordering the *project boundary* that lead from dwelling units to the school site must have (1) a complete network of sidewalks on both sides and (2) either continuous bicycle lanes or a combination of traffic control and calming measures (alleys may be exempted). If the school is planned as part of the project, it must be designed such that pedestrians and cyclists can easily reach building entrances without crossing bus zones, parking entrances, and student drop-off areas.

New school campuses within the project boundary must not exceed the following limits:

- high school (students 15-18 years old), 15 acres (6 hectares);
- middle school (students 11-14 years old), 10 acres (4 hectares); and
- elementary school (students 6-10 years old), 5 acres (2 hectares).

Schools combining grade levels from more than one category may use the grade level with the higher allowable limits.

Facilities on the school site (e.g., athletic fields, playgrounds, multipurpose interior spaces) for which there is a formal joint-use agreement with another entity may be deducted from the total site area of the school.

GREEN INFRASTRUCTURE AND BUILDINGS (GIB)

GIB PREREQUISITE: CERTIFIED GREEN BUILDING
Required

ND
This prerequisite applies to

- Neighborhood Development Plan
- Neighborhood Development

Intent
To encourage the design, construction, and retrofit of buildings using green building practices.

Requirements

ND PLAN, ND (GIB)

Design, construct, or retrofit one whole building within the project to be certified through a LEED rating system (if LEED for Commercial Interiors, 75% of the total building floor area must be certified), or through a green building rating system requiring review by independent, impartial, third-party certifying bodies that have been accredited by an IAF-accredited body to ISO/IEC Guide 65 or, when available, ISO/IEC 17065.

GIB PREREQUISITE: MINIMUM BUILDING ENERGY PERFORMANCE
Required

ND
This prerequisite applies to

- Neighborhood Development Plan
- Neighborhood Development

Intent

To encourage the design and construction of energy-efficient buildings that reduce air, water, and land pollution and environmental damage from energy production and consumption.

Requirements

ND PLAN, ND

The requirements apply to 90% of the total building floor area (rounded up to the next whole building) of all nonresidential buildings, mixed-use buildings, and multiunit residential buildings four stories or more constructed as part of the project or undergoing major renovations as part of the project. Each counted building must comply with one of the following options.

Option 1. Whole-Building Energy Simulation

Demonstrate an average improvement of 5% for new buildings, 3% for major building renovations, or 2% for core and shell buildings over ANSI/ASHRAE/IESNA Standard 90.1–2010, with errata (or a USGBC-approved equivalent standard for projects outside the U.S.) across all buildings pursuing Option 1. Multiple buildings may be grouped into a single energy model, provided (1) the building type (new construction, major renovation, or core and shell) is consistent for all buildings included in the energy model, or (2) an average 5% improvement is demonstrated for the entire energy model. Calculate the baseline building performance according to ANSI/ASHRAE/IESNA Standard 90.1–2010, Appendix G, with errata, using a simulation model.

Buildings must meet the minimum percentage savings before taking credit for renewable energy systems.

Each building's proposed design must meet the following criteria:

- compliance with the mandatory provisions of ANSI/ASHRAE/IESNA Standard 90.1–2010, with errata (or a USGBC-approved equivalent standard for projects outside the U.S.);
- inclusion of all energy consumption and costs within and associated with the building project; and
- comparison against a baseline building that complies with Standard 90.1–2010, Appendix G, with errata (or a USGBC-approved equivalent standard for projects outside the U.S.).

Document the energy modeling input assumptions for unregulated loads. Unregulated loads should be modeled accurately to reflect the actual expected energy consumption of the building.

If unregulated loads are not identical for both the baseline and the proposed building performance rating, and the simulation program cannot accurately model the savings, follow the exceptional calculation method (ANSI/ASHRAE/IESNA Standard 90.1–2010, G2.5). Alternatively, use the COMNET modeling guidelines and procedures to document measures that reduce unregulated loads.

OR

Option 2. Prescriptive Compliance: ASHRAE 50% Advanced Energy Design Guide

Comply with the mandatory and prescriptive provisions of ANSI/ASHRAE/IESNA Standard 90.1–2010, with errata (or a USGBC-approved equivalent standard for projects outside the U.S.).

Comply with HVAC and service water heating requirements applicable to the each building, including equipment efficiency, economizers, ventilation, and ducts and dampers, for the appropriate ASHRAE 50% Advanced Energy Design Guide and climate zone:

- ASHRAE 50% Advanced Energy Design Guide for Small to Medium Office Buildings, for office buildings smaller than 100,000 square feet (9 290 square meters);
- ASHRAE 50% Advanced Energy Design Guide for Medium to Large Box Retail Buildings, for retail buildings with 20,000 to 100,000 square feet (1 860 to 9 290 square meters);
- ASHRAE 50% Advanced Energy Design Guide for K–12 School Buildings; or
- ASHRAE 50% Advanced Energy Design Guide for Large Hospitals.
    - Over 100,000 square feet (9 290 square meters)

For projects outside the U.S., consult ASHRAE/ASHRAE/IESNA Standard 90.1–2010, Appendixes B and D, to determine the appropriate climate zone.

Option 3. Prescriptive Compliance: Advanced Buildings Core Performance Guide

Comply with the mandatory and prescriptive provisions of ANSI/ASHRAE/IESNA Standard 90.1–2010, with errata (or USGBC approved equivalent standard for projects outside the U.S.).

Comply with Section 1: Design Process Strategies, Section 2: Core Performance Requirements, and the following three strategies from Section 3: Enhanced Performance Strategies, as applicable. Where standards conflict, follow the more stringent of the two. For projects outside the U.S., consult ASHRAE/ASHRAE/IESNA Standard 90.1-2010, Appendixes B and D, to determine the appropriate climate zone.

3.5 Supply Air Temperature Reset (VAV)
3.9 Premium Economizer Performance
3.10 Variable Speed Control

To be eligible for Option 3, the project must be less than 100,000 square feet (9 290 square meters).

Note: Healthcare, Warehouse or Laboratory projects are ineligible for Option 3.

AND

For new *single-family residential* buildings and new lowrise multifamily buildings, 90% of the buildings must meet the requirements of LEED for Homes v4 EA Prerequisite: Minimum Energy Performance.

GIB PREREQUISITE: INDOOR WATER USE REDUCTION
Required

ND
This prerequisite applies to

- Neighborhood Development Plan
- Neighborhood Development

Intent

To reduce indoor water consumption.

Requirements

ND PLAN, ND

Nonresidential Buildings, Mixed-Use Buildings, and Multifamily Residential Buildings Four Stories or More

For new buildings and buildings undergoing major renovations as part of the *project*, reduce indoor water usage by an average of 20% from a baseline. All newly installed toilets, urinals, private lavatory faucets, and showerheads that are eligible for labeling must be WaterSense labeled (or a local equivalent for projects outside the U.S.).

For the fixtures and fittings listed in Table 1, as applicable to the project scope, reduce water consumption by 20% from the baseline. Base calculations on the volumes and flow rates shown in Table 1.

The design case is calculated as a weighted average of water usage for the buildings constructed as part of the project based on their floor area.

Table 1. Baseline water consumption of fixtures and fittings

Fixture or fitting	*Baseline (IP units)*	*Baseline (SI units)*
Toilet (water closet)*	1.6 gpf	6 lpf
Urinal*	1.0 gpf	3.8 lpf
Public lavatory (restroom) faucet	0.5 gpm at 60 psi** all others except private applications	1.9 lpm at 415 kPa, all others except private applications
Private lavatory faucet*	2.2 gpm at 60 psi	8.3 lpm at 415 kPa
Kitchen faucet (excluding faucets used exclusively for filling operations)	2.2 gpm at 60 psi	8.3 lpm at 415 kPa
Showerhead*	2.5 gpm at 80 psi per shower stall	9.5 lpm at 550 kPa per shower stall

* WaterSense label available for this product type
gpf = gallons per flush
gpm = gallons per minute
psi = pounds per square inch
lpf = liters per flush
lpm = liters per minute
kPa = kilopascals

New Single-Family Residential Buildings and New Multiunit Residential Buildings Three Stories or Fewer

90% of residential buildings must use a combination of fixtures and fittings that would earn 2 points under LEED for Homes v4 WE Credit Indoor Water Use.

GIB PREREQUISITE: CONSTRUCTION ACTIVITY POLLUTION PREVENTION Required

ND
This prerequisite applies to

- Neighborhood Development Plan
- Neighborhood Development

Intent
To reduce pollution from construction activities by controlling soil erosion, waterway sedimentation, and airborne dust.

Requirements

ND PLAN, ND

Create and implement an erosion and sedimentation control plan for all new construction activities associated with the project. The plan must incorporate best management practices (BMPs) to control erosion and sedimentation in runoff from the entire project site during construction. The BMPs must be selected from EPA's BMPs for construction and post-construction site runoff control.

The erosion and sedimentation control plan must list the BMPs employed and describe how the project team will do the following:

- preserve vegetation and mark clearing limits;
- establish and delineate construction access;
- control flow rates;
- install sediment controls;
- stabilize soils;
- prevent soil loss during construction;
- stockpile topsoil for reuse;
- protect slopes;
- protect drain inlets, all rainwater conveyance systems, and receiving water bodies;
- stabilize channels and outlets;
- control pollutants including dust and particulate matter;
- control dewatering;
- maintain the BMPs; and
- manage the erosion and sedimentation control plan.

GIB CREDIT: CERTIFIED GREEN BUILDINGS

ND
1–5 points
This credit applies to

- Neighborhood Development Plan
- Neighborhood Development

Intent
To encourage the design, construction, and retrofit of buildings using green building practices.

Requirements

ND PLAN, ND

Option 1. Projects with 10 or Fewer Habitable Buildings (1–5 points)
Design, construct, or retrofit one building as part of the project, beyond the prerequisite requirement, to be certified under a LEED green building rating systems (for LEED for Commercial Interiors, 75% of the total building floor area must be certified), or through a green building rating system requiring review by independent, impartial, third-party certifying bodies that have been accredited by an IAF-accredited body to ISO/IEC Guide 65 or, when available, ISO/IEC 17065. Up to five points may be earned for each additional certified building that is part of the project.

OR

Option 2. Projects of All Sizes (1–5 points)
Design, construct, or retrofit a percentage of the total project building floor area, beyond the prerequisite requirement, to be certified under a LEED green building rating systems or through a green building rating system requiring review by independent, impartial, third-party certifying bodies that have been accredited by an IAF-accredited body to ISO/IEC Guide 65 or, when available, ISO/IEC 17065.

Table 1. Points for green building certification

Percentage of total floor area certified	Points
≥ 10% and < 20%	1
≥ 20% and < 30%	2
≥ 30% and < 40%	3
≥ 40% and < 50%	4
≥ 50%	5

For All Projects Detached accessory dwelling units must be counted as separate buildings. Accessory dwellings attached to a main building are not counted separately.

GIB CREDIT: OPTIMIZE BUILDING ENERGY PERFORMANCE

ND
1–2 points
This credit applies to

- Neighborhood Development Plan
- Neighborhood Development

Intent

To encourage the design and construction of energy-efficient buildings that reduce air, water, and land pollution and adverse environmental effects from energy production and consumption.

Requirements

ND PLAN, ND

The requirements apply to 90% of the total building floor area (rounded up to the next whole building) of all nonresidential buildings, mixed-use buildings, and *multiunit residential* buildings four stories or more constructed as part of the *project* or undergoing major renovations as part of the project.
Each counted building must comply with one of the following efficiency options.

Option 1. Whole-Building Energy Simulation (1–2 points)

New buildings must demonstrate an average percentage improvement of 12% (1 point) or 20% (2 points) over ANSI/ASHRAE/IESNA Standard 90.1–2010, with errata. Buildings undergoing major renovations as part of the project must demonstrate an average percentage improvement of 10% (1 point) or 18% (2 points). Core and shell buildings must demonstrate an average percentage improvement of 11% (1 point) or 15% (2 points). To determine percentage improvement, follow the method outlined in GIB Prerequisite Minimum Building Energy Performance.

OR

Option 2. Prescriptive Compliance: ASHRAE 50% Advanced Energy Design Guide (2 points)

To be eligible for Option 2, project must comply with all of requirements of Option 2 in GIB Prerequisite Minimum Building Energy Performance.

AND

Comply with the applicable recommendations and standards in Chapter 4, Design Strategies and Recommendations by Climate Zone, for the appropriate ASHRAE 50% Advanced Energy Design Guide and climate zone. For projects outside the U.S., consult ASHRAE/ASHRAE/IESNA Standard 90.1–2010, Appendixes B and D, to determine the appropriate climate zone.

ASHRAE 50% Advanced Energy Design Guide for Small to Medium Office Buildings

- *Building envelope, opaque:* roofs, walls, floors, slabs, doors, and continuous air barriers
- *Building envelope, glazing:* vertical fenestration
- *Interior lighting,* including daylighting and interior finishes
- *Exterior lighting*
- *Plug loads,* including equipment and controls

ASHRAE 50% Advanced Energy Design Guide for Medium to Large Box Retail Buildings

- *Building envelope, opaque:* roofs, walls, floors, slabs, doors, and vestibules
- *Building envelope, glazing:* fenestration - all orientations
- *Interior lighting,* excluding lighting power density for sales floor

- *Additional interior lighting* for sales floor
- *Exterior lighting*
- *Plug loads,* including equipment choices and controls

ASHRAE 50% Advanced Energy Design Guide for K–12 School Buildings

- *Building envelope, opaque:* roofs, walls, floors, slabs, and doors
- *Building envelope, glazing:* vertical fenestration
- *Interior lighting,* including daylighting and interior finishes
- *Exterior lighting*
- *Plug loads,* including equipment choices, controls, and kitchen equipment

ASHRAE 50% Advanced Design Guide for Large Hospitals

- *Building envelope, opaque:* roofs, walls, floors, slabs, doors, vestibules, and continuous air barriers
- *Building envelope, glazing:* vertical fenestration
- *Interior lighting,* including daylighting (form or nonform driven) and interior finishes
- *Exterior lighting*
- *Plug loads,* including equipment choices, controls, and kitchen equipment

For new *single-family residential* buildings and new multiunit residential buildings three stories or fewer, 90% of the buildings must reduce absolute estimated annual energy usage by 20% compared with the LEED Energy Budget for each building. Follow the method outlined in LEED v4 for Homes, EA Credit Annual Energy Use.

GIB CREDIT: INDOOR WATER USE REDUCTION

ND
1 point
This credit applies to

- Neighborhood Development Plan
- Neighborhood Development

Intent

To reduce indoor water consumption.

Requirements

ND PLAN, ND

Nonresidential Buildings, Mixed-Use Buildings, and Multifamily Residential Buildings Four Stories or More

For new buildings and buildings undergoing major renovations as part of the *project*, reduce indoor water usage by an average of 40% from a baseline.

All newly installed toilets, urinals, private lavatory faucets, and showerheads that are eligible for labeling must be WaterSense labeled (or local equivalent for projects outside the U.S.).

For fixtures and fittings listed in Table 1, as applicable to the project scope, calculate the baseline water consumption using estimated occupant usage.

The design case is calculated as a weighted average of water usage for the buildings constructed as part of the project, based on their floor area.

Table 1. Baseline water consumption of fixtures and fittings

Fixture or fitting	*Baseline (IP units)*	*Baseline (SI units)*
Toilet (water closet)*	1.6 gpf	6 lpf
Urinal*	1.0 gpf	3.8 lpf
Public lavatory (restroom) faucet	0.5 gpm at 60 psi** all others except private applications	1.9 lpm at 415 kPa, all others except private applications
Private lavatory faucet*	2.2 gpm at 60 psi	8.3 lpm at 415 kPa
Kitchen faucet (excluding faucets used exclusively for filling operations)	2.2 gpm at 60 psi	8.3 lpm at 415 kPa
Showerhead*	2.5 gpm at 80 psi per shower stall	9.5 lpm at 550 kPa per shower stall

* WaterSense label available for this product type
gpf = gallons per flush
gpm = gallons per minute
psi = pounds per square inch
lpf = liters per flush
lpm = liters per minute
kPa = kilopascals

New Single-Family Residential Buildings and New Multiunit Residential Buildings Three Stories or Fewer

90% of buildings must use a combination of fixtures and fittings that would earn 4 points under LEED v4 for Building Design and Construction: Homes and Multifamily Lowrise v4 WE Credit Indoor Water Use.

GIB CREDIT: OUTDOOR WATER USE REDUCTION

ND
1–2 points
This credit applies to

- Neighborhood Development Plan
- Neighborhood Development

Intent

To reduce outdoor water consumption.

Requirements

ND PLAN, ND

Reduce outdoor water use through one of the following options. Nonvegetated surfaces, such as permeable or impermeable pavement, should be excluded from landscape area calculations. Athletic fields and playgrounds (if vegetated) and food gardens may be included or excluded at the project team's discretion.

Option 1. No Irrigation Required (2 points)

Show that the landscape does not require a permanent irrigation system beyond a maximum two-year establishment period.

OR

Option 2. Reduced Irrigation (1–2 points)

Reduce the project's landscape water requirement (LWR) by at least 30% from the calculated baseline for the site's peak watering month. Reductions must first be achieved through plant species selection and irrigation system efficiency as calculated in the Environmental Protection Agency (EPA) WaterSense Water Budget Tool.

Additional reductions beyond 30% may be achieved using any combination of efficiency, alternative water sources, and smart scheduling technologies.

Table 1. Points for reducing irrigation water

Percentage reduction from baseline	*Points*
30%	1
50%	2

GIB CREDIT: BUILDING REUSE

ND
1 point
This credit applies to

- Neighborhood Development Plan
- Neighborhood Development

Intent

To extend the life cycle of buildings and conserve resources, reduce waste, and reduce environmental harm from materials manufacturing and transport for new buildings.

Requirements

ND PLAN, ND (GIB)

Case 1. Five Buildings or Fewer

For projects with five or fewer buildings undergoing major renovations, reuse 50% of one such building, based on surface area. Calculations must include structural elements (e.g., floors, roof decking) and enclosure materials (e.g., skin, framing). Exclude from the calculations window assemblies, nonstructural roofing material, and any hazardous materials that are remediated as part of the project.

Case 2. More Than Five Buildings

For projects with more than five buildings undergoing major renovations, reuse 20% of the total surface area of such buildings (including structure and enclosure materials, as defined in Case 1).

For All Projects Do not demolish any *historic buildings* or contributing buildings in a *historic district*, or portions thereof, or alter any *cultural landscapes* as part of the project.

An exception is granted only with approval from an appropriate review body. For buildings or landscapes listed locally, approval must be granted by the local historic preservation review board, or equivalent. For buildings or landscapes listed in a state register or in the National Register of Historic Places (or equivalent for projects outside the U.S.), approval must appear in a programmatic agreement with the state historic preservation office or National Park Service (or local equivalent for projects outside the U.S.).

GIB CREDIT: HISTORIC RESOURCE PRESERVATION AND ADAPTIVE REUSE

ND
2 points
This credit applies to

- Neighborhood Development Plan
- Neighborhood Development

Intent

To respect local and national landmarks and conserve material and cultural resources by encouraging the preservation and adaptive reuse of historic buildings and cultural landscapes.

Requirements

ND PLAN, ND (GIB)

This credit is available to projects with at least one historic building, contributing building in a historic district, or cultural landscape on the *project* site.

Do not demolish any historic buildings or contributing buildings in a historic district, or portions thereof, or alter any cultural landscapes as part of the project.

An exception is granted only with approval from an appropriate review body. For buildings or landscapes listed locally, approval must be granted by the local historic preservation review board, or equivalent. For buildings or landscapes listed in a state register or in the National Register of Historic Places (or equivalent for projects outside the U.S.), approval must appear in a programmatic agreement with the state historic preservation office or National Park Service (or local equivalent for projects outside the U.S.).

If any historic building or a contributing building in a historic district in the project site is to be altered (rehabilitated, preserved, or restored), use one of the following approaches for each building, as applicable.

- *Building subject to local review.* Obtain approval, in the form of a certificate of appropriateness, from a local historic preservation commission or architectural review board for any exterior alterations or additions.

- *Building subject to state or federal review.* If the building is subject to review by a state historic preservation office or the National Park Service (or equivalent body for projects outside the U.S.), the alteration must meet the Secretary of the Interior's Standards for the Treatment of Historic Properties (or equivalent for projects outside the U.S.).

- *Listed or eligible building not subject to review.* If a building is listed or determined eligible but alteration is not subject to local, state, or federal review, include on the project team a preservation professional who meets the U.S. federal qualifications for historic architects or architectural historians (or a local equivalent for projects outside the U.S.). The preservation professional must confirm adherence to the Secretary of the Interior's Standards for the Treatment of Historic Properties, or a local equivalent for projects outside the U.S.

If a cultural landscape is to be rehabilitated, restored, or preserved, do so in accordance with the Guidelines for the Treatment of Cultural Landscapes or local equivalent for projects outside the U.S. whichever is more stringent.

GIB CREDIT: MINIMIZED SITE DISTURBANCE

ND
1 point
This credit applies to

- Neighborhood Development Plan
- Neighborhood Development

Intent
To preserve existing noninvasive trees, native plants, and pervious surfaces.

Requirements

ND PLAN, ND (GIB)

Option 1. Development Footprint on Previously Developed Land (1 point)
Locate 100% of the development footprint and the construction impact zone on previously developed land.

OR

Option 2. Undeveloped Portion of Project Left Undisturbed (1 point)
Depending on the density of the project, do not develop or disturb a portion of the site that has not been previously developed, exclusive of (1) any land preserved by codified law, (2) a prerequisite of LEED for Neighborhood Development or (3) exempt areas designated as nonbuildable in comprehensive land-use plans. Stipulate in covenants, conditions, and restrictions (CC&R) or other binding documents that the undisturbed area will be protected from development by a private or governmental agency for the purpose of long-term conservation. When determining the minimum area to be left undeveloped, mixed-use projects must use the lowest applicable density from Table 1 or use the weighted average methodology in NPD Credit Compact Development. Densities and minimum percentages are as follows:

Table 1. Minimum undeveloped area, by project density

Residential density (DU/acre)	Residential density (DU/hectare)	Nonresidential density (FAR)	Minimum area left undisturbed
< 13	<32	< 0.5	20%
> 13 and ≤ 18	> 32 and ≤ 45	≥ 0.5 and ≤1	15%
> 18	> 45	> 1	10%

DU = dwelling unit; FAR = floor-area ratio.

For portions of the site that are not previously developed, identify construction impact zones that limit disturbance to the following:

- 40 feet (12 meters) beyond the building perimeter;
- 10 feet (3 meters) beyond surface walkways, patios, surface parking, and utilities less than 12 inches (30 centimeters) in diameter;
- 15 feet (4.5 meters) beyond street curbs and main utility branch trenches; and
- 25 feet (7.5 meters) beyond constructed areas with permeable surfaces (such as pervious paving areas, stormwater retention facilities, and playing fields) that require additional staging areas to limit compaction in the constructed zone.

For All Projects

Survey the site to identify the following:

- trees in good or excellent condition, as determined by an arborist certified by the International Society of Arboriculture (ISA) or local equivalent professional for projects outside the U.S.;
- any heritage or champion trees of special importance to the community because of their age, size, type, historical association, or horticultural value, as defined by a government forester;

- all trees larger than 6 inches (15 centimeters) in diameter at breast height (dbh, 4 feet 6 inches [1.4 meters] above ground); and
- any invasive plant species that affect trees present on the site, and whether those plants threaten the health of other trees to be preserved on the site, as determined by an ISA-certified arborist or local equivalent professional.

.

Preserve the following trees that are also identified as in good or excellent condition:

- all heritage or champion trees and trees whose dbh exceeds 50% of the state champion dbh for the species;
- a minimum of 75% of all noninvasive trees (including the above) larger than 18 inches (45 centimeters) dbh; and
- a minimum of 25% of all noninvasive trees (including the above) larger than 12 inches (30 centimeters) dbh if deciduous and 6 inches (15 centimeters) dbh if coniferous.

Tree condition ratings must be determined by an ISA-certified arborist using ISA-approved assessment measures or by a local equivalent professional utilizing an equivalent methodology.

Develop a plan, in consultation with and approved by an ISA-certified arborist or equivalent, for the health of the trees, including fertilization and pruning, and for their protection during construction.

If an ISA-certified arborist or local equivalent professional has determined that any trees to be preserved are threatened by invasive vegetation, develop a plan to reduce the invasive vegetation. Stipulate in codes, covenants, and restrictions or other binding documents that the undisturbed area of the preserved trees will be protected from development by a private or governmental agency for the purpose of long-term conservation.

GIB CREDIT: RAINWATER MANAGEMENT

ND
1–4 points
This credit applies to

- Neighborhood Development Plan
- Neighborhood Development

Intent
To reduce runoff volume and improve water quality by replicating the natural hydrology and water balance of the site, based on historical conditions and undeveloped ecosystems in the region.

Requirements

ND PLAN, ND

In a manner best replicating *natural site hydrology* processes, *manage on site* the runoff from the developed site for the percentile of regional or local rainfall events listed in Table 1, using *low-impact development (LID)* and *green infrastructure*.

Use daily rainfall data and the methodology in the U.S. Environmental Protection Agency (EPA) Technical Guidance on Implementing the Stormwater Runoff Requirements for Federal Projects under Section 438 of the Energy Independence and Security Act to determine the percentile amounts listed in Table 1. The percentile rainfall event indicates the total volume to be retained on site.

Table 1. Points for retaining rainwater on site

Percentile rainfall event	Points
80th	1
85th	2
90th	3
95th	4

Projects that earn at least 2 points under this credit may earn an additional point if the site meets one of the following criteria.

- The project is located on a previously developed site.
- The project achieves 1 point in SLL Credit Brownfield Remediation.
- The project is designed to be transit ready by achieving at least 2 points each under NPD Credit Walkable Streets, NPD Credit Compact Development, and NPD Credit Mixed-Use Neighborhoods.

GIB CREDIT: HEAT ISLAND REDUCTION

ND
1 point
This credit applies to

- Neighborhood Development Plan (1 point)
- Neighborhood Development (1 point)

Intent
To minimize effects on microclimates and human and wildlife habitats by reducing heat islands.

Requirements

ND PLAN, ND

Option 1. Nonroof (1 point)
Use any combination of the following strategies for 50% of the nonroof site paving (including roads, sidewalks, courtyards, parking lots, parking structures, and driveways).

- Use the existing plant material or install plants that provide shade over the paving areas on the site within 10 years of plant material installation.
- Install and plant planters, either at grade or raised. Plant material cannot include artificial turf.
- Provide shade with structures covered by energy generation systems, such as solar thermal collectors, photovoltaics, and wind turbines, that produce energy used to offset some nonrenewable resource use.
- Provide shade with architectural devices or structures that have a three-year aged *solar reflectance (SR)* value of at least 0.28. If three-year aged value information is not available, use materials with an initial SR of at least 0.33 at installation,
- Provide shade with vegetated structures.
- Use paving materials with a three-year aged *solar reflectance (SR)* value of at least 0.28. If three-year aged value information is not available, use materials with an initial SR of at least 0.33 at installation.
- Use an *open-grid pavement system* (at least 50% unbound).

OR

Option 2. High-Reflectance and Vegetated Roofs (1 point)
Use roofing materials that have an SRI equal to or greater than the values in Table 1. Meet the three-year aged SRI value (if three-year aged value information is not available, use materials that meet the initial SRI value) for a minimum of 75% of the roof area of all new buildings within the project, or install a vegetated ("green") roof for at least 75% of the roof area of all new buildings within the project. Combinations of SRI-compliant and vegetated roofs can be used, provided they satisfy the equation in Option 3.

Table 1. Minimum solar reflectance index value, by roof slope

	Initial SRI	3-year aged SRI
Low (≤ 2:12)	82	64
Steep (> 2:12)	39	32

OR

Option 3. Mixed Nonroof and Roof Measures (1 point)
Use any of the strategies listed under Options 1 and 2 that in combination meet the following criterion:

Area of Area of High- Area of Total Site Total Roof Area

$$\frac{\text{Nonroof Measures}}{0.5} + \frac{\text{Reflectance Roof}}{0.75} + \frac{\text{Vegetated Roof}}{0.75} \geq \text{Paving Area} +$$

Alternatively, an SRI and SR weighted average approach may be used to calculate compliance:

GIB CREDIT: SOLAR ORIENTATION

ND
1 point
This credit applies to

- Neighborhood Development Plan
- Neighborhood Development

Intent

To encourage energy efficiency by creating optimum conditions for the use of passive and active solar strategies.

Requirements

ND PLAN, ND

Option 1. Block Orientation (1 point)

This option is for projects that earn at least 2 points under NPD Credit Compact Development.

Design and orient the project or locate the project on existing blocks such that one axis of 75% or more of the blocks is within ±15 degrees of geographical east-west, and the east-west lengths of those blocks are at least as long as the north-south lengths.

OR

Option 2. Building Orientation (1 point)

Design and orient 75% or more of the project's total building floor area (excluding existing buildings) such that one axis of each qualifying building is at least 1.5 times longer than the other, and the longer axis is within 15 degrees of geographical east-west. The length-to-width ratio applies only to walls enclosing conditioned spaces; walls enclosing unconditioned spaces, such as garages, arcades, or porches, cannot contribute to credit achievement. The surface area of equator-facing vertical surfaces and slopes of roofs of buildings counting toward credit achievement must not be more than 25% shaded at the time of initial occupancy, measured at noon on the winter solstice.

GIB CREDIT: RENEWABLE ENERGY PRODUCTION

ND
1–3 points
This credit applies to

- Neighborhood Development Plan
- Neighborhood Development

Intent

To reduce the environmental and economic harms associated with fossil fuel energy by increasing self-supply of renewable energy.

Requirements

ND PLAN, ND

Incorporate on-site nonpolluting renewable energy generation, such as solar, wind, geothermal, small-scale or micro-hydroelectric, or biomass, with production capacity of at least 5% of the project's annual electrical and thermal energy cost (exclusive of *existing* buildings).

Points are awarded according to Table 1.

Table 1. Points for renewable energy production

Percentage of annual electrical and thermal energy cost	*Points*
5%	1
12.5%	2
20%	3

GIB CREDIT: DISTRICT HEATING AND COOLING

ND
2 points
This credit applies to

- Neighborhood Development Plan
- Neighborhood Development

Intent

To encourage the development of energy-efficient neighborhoods by employing district heating and cooling strategies that reduce energy use and energy-related environmental harms.

Requirements

ND PLAN, ND

Incorporate a district heating and/or cooling system for space conditioning and/or water heating of new buildings (at least two buildings total) such that at least 80% of the *project's* annual heating and/or cooling consumption is provided by the district plant. *Single-family residential* buildings and *existing* buildings of any type may be excluded from the calculation.

Each system component that is addressed by ANSI/ASHRAE/IESNA Standard 90.1–2010 must have an overall efficiency performance at least 10% better than that specified by the standard's prescriptive requirements. Additionally, annual district pumping energy consumption that exceeds 2.5% of the annual thermal energy output of the heating and cooling plant must be offset by increases in the component's efficiency beyond the 10% improvement. If a combined heat and power (CHP) system is used to comply with the credit requirements, show equivalence by demonstrating that energy consumption savings from the CHP plant at least equal the energy savings that would result from using a conventional district energy system with components that are 10% better than ANSI/ASHRAE/IESNA Standard 90.1–2010. When determining equivalency, take into account the pumping energy as described above.

GIB CREDIT: INFRASTRUCTURE ENERGY EFFICIENCY

ND
1 point
This credit applies to

- Neighborhood Development Plan
- Neighborhood Development

Intent

To reduce the environmental harms from energy used for operating public infrastructure.

Requirements

ND PLAN, ND

Design, purchase, or work with the municipality to install all new infrastructure (e.g., traffic lights, *street* lights, water and wastewater pumps) to achieve a 15% annual energy reduction below an estimated baseline energy use for this infrastructure. When determining the baseline, assume the use of lowest first-cost infrastructure items.

GIB CREDIT: WASTEWATER MANAGEMENT

ND
1–2 points
This credit applies to

- Neighborhood Development Plan
- Neighborhood Development

Intent

To reduce pollution from wastewater and encourage water reuse. .

Requirements

ND PLAN, ND (GIB)

Design and construct the project to retain on-site at least 25% of the average annual wastewater generated by the project (excluding any existing buildings), and reuse that wastewater to replace potable water. Provide on-site treatment to a quality required by state and local regulations for the proposed reuse, whichever is more stringent. Calculate the percentage of wastewater diverted and reused by determining the total wastewater flow, using the design case from GIB Prerequisite Indoor Water Use Reduction and adding wastewater flow from residential buildings, then determining how much of that volume is reused on site.

Table 1. Points for reusing wastewater

Percentage of wastewater reused	*Points*
25%	1
50%	2

GIB CREDIT: RECYCLED AND REUSED INFRASTRUCTURE

ND
1 point
This credit applies to

- Neighborhood Development Plan
- Neighborhood Development

Intent

To avoid the environmental consequences of extracting and processing virgin materials by using recycled and reclaimed materials.

Requirements

ND PLAN, ND (GIB)

Use materials for new infrastructure such that the sum of the *postconsumer* recycled content, on-site reused materials, and one-half of the *preconsumer* recycled content constitutes at least 50% of the total mass of infrastructure materials.

Count materials in all of the following infrastructure items, as applicable:

- roadways, parking lots, sidewalks, unit paving, and curbs;
- water retention tanks and vaults;
- base and sub-base materials for the above; and
- rainwater, sanitary sewer, steam energy distribution, and water piping.

Recycled content is defined in accordance with ISO/IEC 14021, Environmental Labels and Declaration, Self-Declared Environmental Claims (Type II environmental labeling).

GIB CREDIT: SOLID WASTE MANAGEMENT

ND
1 point
This credit applies to

- Neighborhood Development Plan
- Neighborhood Development

Intent

To reduce the volume of waste deposited in landfills and promote the proper disposal of hazardous waste.

Requirements

ND PLAN, ND (GIB)

Meet at least four of the following five requirements and publicize their availability and benefits.

a. Include as part of the *project* at least one recycling or reuse station, available to all project occupants, dedicated to the separation, collection, and storage of materials for recycling; or locate the project in a local government jurisdiction that provides recycling services. The recycling must cover at least paper, corrugated cardboard, glass, plastics, and metals.

b. Include as part of the project at least one drop-off point, available to all project occupants, for potentially hazardous office or household wastes and establish a plan for postcollection disposal or use; or locate the project in a local government jurisdiction that provides collection services. Examples of potentially hazardous wastes include paints, solvents, oil, mercury-containing lamps, electronic waste, and batteries.

c. Include as part of the project at least one compost station or location, available to all project occupants, dedicated to the collection and composting of food and yard wastes, and establish a plan for postcollection use; or locate the project in a local government jurisdiction that provides composting services. .

d. On every mixed-use or nonresidential *block* or at least every 800 feet (245 meters), whichever is shorter, include recycling containers either adjacent to or integrated into the design of other receptacles.

e. Recycle, reuse, or salvage at least 50% of nonhazardous construction, demolition, and renovation debris. Calculations can be done by weight or volume but must be consistent throughout. Develop and implement a construction waste management plan that identifies the materials to be diverted from disposal and specifies whether the materials will be stored on site or commingled. Reused or recycled asphalt, brick, and concrete (ABC) can account for no more than 75% of the diverted waste total. Exclude excavated soil, land-clearing debris, and materials contributing toward GIB Credit Building Reuse from calculations. Include materials destined for alternative daily cover (ADC) in the calculations as waste (not diversion).

GIB CREDIT: LIGHT POLLUTION REDUCTION

ND
1 point
This credit applies to

- Neighborhood Development Plan
- Neighborhood Development

Intent
To increase night sky access, improve nighttime visibility, and reduce the consequences of development for wildlife and people.

Requirements

ND PLAN, ND

Meet the Light Pollution Reduction requirements for the following:
1. One option in Exterior Lighting for Residential Areas
2. Exterior Lighting for Circulation Network
3. Uplight and light trespass requirements in Exterior Lighting for All Other Areas
4. Covenants, Conditions, and Restrictions.

Divide the project into model lighting ordinance (MLO) lighting zones LZ0 to LZ4 based on site-specific characteristics using the definitions of lighting zones provided in the Illuminating Engineering Society and International Dark Sky Association (IES/IDA) MLO User Guide.

Meet the requirements below for each lighting zone within the project.

Exterior Lighting for Residential Areas
Meet either Option 1 or Option 2 for all exterior lighting in new residential construction and residential buildings undergoing major renovations. Existing residential construction is exempt. Projects may use different options for uplight and light trespass.

> **Option 1. BUG Rating Method**
> Each fixture must have a backlight-uplight-glare (BUG) rating (as defined in IES TM-15-11, Addendum A) of no more than B2-U2-G2.
>
> OR
>
> **Option 2. Calculation Method**
> Meet the requirements of Option 2 in Exterior Lighting for All Other Areas, below.

Exterior Lighting for Circulation Network
For any portions of the circulation network not governed by national, state, or other superseding regulations, do not install street lighting unless conditions warrant the need for street lighting.

New and existing street lighting luminaires must not emit any light above 90 degrees (horizontal), based on the photometric characteristics of each luminaire when mounted in the same orientation and tilt as specified in the project design or as currently installed.

Exception for ornamental luminaires: Using the lowest MLO lighting zone for immediately adjacent properties, meet the requirements of the IES/IDA MLO, Table H.

AND

Exterior Lighting for All Other Areas

Use either the BUG method (Option 1) or the calculation method (Option 2) to meet uplight and light trespass

requirements. Projects may use different options for uplight and light trespass.

Uplight

Option 1. BUG Rating Method
Do not exceed the following luminaire uplight ratings, based on the specific light source installed in the luminaire as defined in IES TM-15-11, Addendum A.

Table 1. Maximum uplight ratings for luminaires, by lighting zone

MLO lighting zone	Luminaire uplight rating
LZ0	U0
LZ1	U1
LZ2	U2
LZ3	U3
LZ4	U4

Option 2. Calculation Method
Do not exceed the following maximum percentages of total lumens emitted above horizontal.

Table 2. Maximum percentage of lumens above horizontal

MLO lighting zone	Maximum allowed percentage of total luminaire lumens emitted above horizontal
LZ0	0%
LZ1	0%
LZ2	1.5%
LZ3	3%
LZ4	6%

Light Trespass

Option 1. BUG Rating Method
Do not exceed the following luminaire backlight and glare ratings (based on the specific light source installed in the luminaire) as defined in IES TM-15-11, Addendum A, based on the mounting location and distance from the *lighting boundary*.

Table 3. Maximum backlight and glare ratings, by lighting zone

	MLO lighting zone				
Luminaire mounting	LZ0	LZ1	LZ2	LZ3	LZ4
	Allowed backlight ratings				
> 2 mounting heights from lighting boundary	B1	B3	B4	B5	B5
1 to 2 mounting heights from lighting boundary and properly oriented	B1	B2	B3	B4	B4
0.5 to 1 mounting height to lighting boundary and properly oriented	B0	B1	B2	B3	B3

< 0.5 mounting height to lighting boundary and properly oriented	B0	B0	B0	B1	B2
	Allowed glare ratings				
Building-mounted > 2 mounting heights from any lighting boundary	G0	G1	G2	G3	G4
Building-mounted 1–2 mounting heights from any lighting boundary	G0	G0	G1	G1	G2
Building-mounted 0.5 to 1 mounting heights from any lighting boundary	G0	G0	G0	G1	G1
Building-mounted < 0.5 mounting heights from any lighting boundary	G0	G0	G0	G0	G1
All other luminaires	G0	G1	G2	G3	G4

A lighting boundary (or boundaries) is defined as the perimeter of each lighting zone within the project boundary. A lighting boundary can be modified under the following conditions:

- When the property line is adjacent to a public area that is a walkway, bikeway, plaza, or parking lot, the lighting boundary may be moved to 5 feet (1.5 meters) beyond the property line;
- When the property line is adjacent to a public street, alley, or transit corridor, the lighting boundary may be moved to the center line of that street, alley, or corridor;
- When there are additional properties owned by the same entity that are contiguous to the property, or properties, that the LEED project is within and have the same or higher MLO lighting zone designation as the LEED project, the lighting boundary may be expanded to include those properties.

Orient all luminaires less than two mounting heights from the lighting boundary such that the backlight points toward the nearest lighting boundary line. Building-mounted luminaires with the backlight oriented toward the building are exempt from the backlight rating requirement.

Option 2. Calculation Method

Do not exceed the following vertical illuminances at the lighting boundary of each lighting zone in the project (use the definition of lighting boundary in Option 1). Calculation points may be no more than 5 feet (1.5 meters) apart. Vertical illuminances must be calculated on vertical planes running parallel to the lighting boundary, with the normal to each plane oriented toward the property and perpendicular to the lighting boundary, extending from grade level to 33 feet (10 meters) above the height of the highest luminaire.

Table 4. Maximum vertical illuminance at lighting boundary, by lighting zone

MLO lighting zone	Vertical illuminance
LZ0	0.05 fc (0.5 lux)
LZ1	0.05 fc (0.5 lux)
LZ2	0.10 fc (1 lux)
LZ3	0.20 fc (2 lux)
LZ4	0.60 fc (6 lux)

FC = footcandle

Exemptions from Uplight and Light Trespass Requirements

The following exterior lighting is exempt from the requirements, provided it is controlled separately from the nonexempt lighting:

- specialized signal, directional, and marker lighting for transportation;
- internally illuminated signage;
- lighting that is used solely for façade and landscape lighting in MLO lighting zones 3 and 4 and is automatically turned off from midnight until 6 a.m.;
- lighting that is integral to other equipment or instrumentation that has been installed by the equipment or instrumentation manufacturer;
- lighting for theatrical purposes for stage, film, and video performances;
- street lighting;
- hospital emergency departments, including associated helipads; and
- lighting for the national flag in MLO lighting zones 2, 3, or 4.

Covenants, Conditions, and Restrictions

Establish *covenants, conditions, and restrictions* (CC&R) or other binding documents that require continued adherence to the above requirements.

INNOVATION (IN)

IN CREDIT: INNOVATION

ND
1–5 points
This credit applies to

- Neighborhood Development Plan
- Neighborhood Development

Intent

To encourage projects to achieve exceptional or innovative performance.

Requirements

ND PLAN, ND

To achieve all five innovation points, a project team must achieve at least one pilot credit, at least one innovation credit and no more than two exemplary performance credits.
Option 1. Innovation (1 point)
Achieve significant, measurable environmental performance using a strategy not addressed in the LEED green building rating system.

Identify the following:

- the intent of the proposed innovation credit;
- proposed requirements for compliance;
- proposed submittals to demonstrate compliance; and
- the design approach or strategies used to meet the requirements.

AND/OR

Option 2. Pilot (1 point)
Achieve one pilot credit from USGBC's LEED Pilot Credit Library.

AND/OR

Option 3. Additional Strategies

- **Innovation (1-3 points)**
  Defined in Option 1 above.
- **Pilot (1-3 points)**
  Meet the requirements of Option 2.
- **Exemplary Performance (1–2 points)**
  Achieve exemplary performance in an existing LEED v4 prerequisite or credit that allows exemplary performance, as specified in the LEED Reference Guide, v4 edition. An exemplary performance point is typically earned for achieving double the credit requirements or the next incremental percentage threshold.

IN CREDIT: LEED ACCREDITED PROFESSIONAL

ND
1 point
This credit applies to

- Neighborhood Development Plan
- Neighborhood Development

Intent

To encourage the team integration required by a LEED project and to streamline the application and certification process.

Requirements

ND PLAN, ND

At least one principal participant of the project team must be a LEED Accredited Professional (AP) with a specialty appropriate for the project.

REGIONAL PRIORITY (RP)

RP CREDIT: REGIONAL PRIORITY

ND
4 points
This credit applies to

- Neighborhood Development Plan (1-4 points)
- Neighborhood Development (1-4 points)

Intent

To provide an incentive for the achievement of credits that address geographically specific environmental, social equity, and public health priorities.

Requirements

ND PLAN, ND

Earn up to four of the six Regional Priority credits. These credits have been identified by the USGBC regional councils and chapters as having additional regional importance for the project's region. A database of Regional Priority credits and their geographic applicability is available on the USGBC website, http://www.usgbc.org.

One point is awarded for each Regional Priority credit achieved, up to a maximum of four.

APPENDICES

APPENDIX 1. USE TYPES AND CATEGORIES

Table 1. Use Types and Categories

Category	Use type
Food retail	Supermarket
	Grocery with produce section
Community-serving retail	Convenience store
	Farmers market
	Hardware store
	Pharmacy
	Other retail
Services	Bank
	Family entertainment venue (e.g., theater, sports)
	Gym, health club, exercise studio
	Hair care
	Laundry, dry cleaner
	Restaurant, café, diner (excluding those with only drive-thru service)
Civic and community facilities	Adult or senior care (licensed)
	Child care (licensed)
	Community or recreation center
	Cultural arts facility (museum, performing arts)
	Education facility (e.g., K—12 school, university, adult education center, vocational school, community college)
	Government office that serves public on-site
	Medical clinic or office that treats patients
	Place of worship
	Police or fire station
	Post office
	Public library
	Public park
	Social services center
Community anchor uses (BD&C and ID&C only)	Commercial office (100 or more full-time equivalent jobs)
	Housing (100 or more dwelling units)

Adapted from Criterion Planners, INDEX neighborhood completeness indicator, 2005.

APPENDIX 2. DEFAULT OCCUPANCY COUNTS

Use Table 1 to calculate default occupancy counts. Only use the occupancy estimates if occupancy is unknown.

For the calculation, use gross floor area, not net or leasable floor area. Gross floor area is defined as the sum of all areas on all floors of a building included within the outside faces of the exterior wall, including common areas, mechanical spaces, circulation areas, and all floor penetrations that connect one floor to another. To determine gross floor area, multiply the building footprint (in square feet or square meters) by the number of floors in the building. Exclude underground or structured parking from the calculation.

Table 1. Default Occupancy Numbers

	Gross square feet per occupant		Gross square meters per occupant	
	Employees	Transients	Employees	Transients
General office	250	0	23	0
Retail, general	550	130	51	12
Retail or service (e.g., financial, auto)	600	130	56	12
Restaurant	435	95	40	9
Grocery store	550	115	51	11
Medical office	225	330	21	31
R&D or laboratory	400	0	37	0
Warehouse, distribution	2,500	0	232	0
Warehouse, storage	20,000	0	1860	0
Hotel	1,500	700	139	65
Educational, daycare	630	105	59	10
Educational, K–12	1,300	140	121	13
Educational, postsecondary	2,100	150	195	14

Sources:
ANSI/ASHRAE/IESNA Standard 90.1–2004 (Atlanta, GA, 2004).
2001 Uniform Plumbing Code (Los Angeles, CA)
California Public Utilities Commission, 2004–2005 Database for Energy Efficiency Resources (DEER) Update Study (2008).
California State University, Capital Planning, Design and Construction Section VI, Standards for Campus Development Programs (Long Beach, CA, 2002).
City of Boulder Planning Department, Projecting Future Employment—How Much Space per Person (Boulder, 2002).
Metro, 1999 Employment Density Study (Portland, OR 1999).
American Hotel and Lodging Association, Lodging Industry Profile Washington, DC, 2008.
LEED for Core & Shell Core Committee, personal communication (2003 - 2006).
LEED for Retail Core Committee, personal communication (2007)
OWP/P, Medical Office Building Project Averages (Chicago, 2008).
OWP/P, University Master Plan Projects (Chicago, 2008).
U.S. General Services Administration, Childcare Center Design Guide (Washington, DC, 2003).

APPENDIX 3. RETAIL PROCESS LOAD BASELINES

Table 1a. Commercial kitchen appliance prescriptive measures and baseline for energy cost budget (IP units)

	Baseline energy usage for energy modeling path				Levels for prescriptive path	
Appliance type	Fuel	Function	Baseline efficiency	Baseline idle rate	Prescriptive efficiency	Prescriptive idle rate
Broiler, underfired	Gas	Cooking	30%	16,000 Btu/h/ft^2 peak input	35%	12,000 Btu/h/ft^2 peak input
Combination ovens, steam mode (P = pan capacity)	Elec	Cooking	40% steam mode	0.37P+4.5 kW	50% steam mode	0.133P+0.6400 kW
Combination ovens, steam mode	Gas	Cooking	20% steam mode	1,210P+35,810 Btu/h	38% steam mode	200P+6,511 Btu/h
Combination ovens, convection mode	Elec	Cooking	65% convection mode	0.1P+1.5 kW	70% convection mode	0.080P+0.4989 kW
Combination ovens, convection mode	Gas	Cooking	35% convection mode	322P+13,563 Btu/h	44% convection mode	150P+5,425 Btu/h
Convection oven, full-size	Elec	Cooking	65%	2.0 kW	71%	1.6 kW
Convection oven, full-size	Gas	Cooking	30%	18,000 Btu/h	46%	12,000 Btu/h
Convection oven, half-size	Elec	Cooking	65%	1.5 kW	71%	1.0 kW
Conveyor oven, > 25-inch belt	Gas	Cooking	20%	70,000 Btu/h	42%	57,000 Btu/h
Conveyor oven, ≤ 25-inch belt	Gas	Cooking	20%	45,000 Btu/h	42%	29,000 Btu/h
Fryer	Elec	Cooking	75%	1.05 kW	80%	1.0 kW
Fryer	Gas	Cooking	35%	14,000 Btu/h	50%	9,000 Btu/h
Griddle (based on 3 ft model)	Elec	Cooking	60%	400 W/ft^2	70%	320 W/ft^2
Griddle (based on 3 ft model)	Gas	Cooking	30%	3,500 Btu/h/ft^2	38%	2,650 Btu/h/ft^2
Hot food holding cabinets (excluding	Elec	Cooking	na	40 W/ft^3	na	21.5V Watts

drawer warmers and heated display), 0 < V < 13 ft³ (V = volume)						
Hot food holding cabinets (excluding drawer warmers and heated display), 13 ≤ V < 28 ft³	Elec	Cooking	na	40 W/ft³	na	2.0V + 254 Watts
Hot food holding cabinets (excluding drawer warmers and heated display), 28 ft³ ≤ V	Elec	Cooking	na	40 W/ft³	na	3.8V + 203.5 Watts
Large vat fryer	Elec	Cooking	75%	1.35 kW	80%	1.1 kW
Large vat fryer	Gas	Cooking	35%	20,000 Btu/h	50%	12,000 Btu/h
Rack oven, double	Gas	Cooking	30%	65,000 Btu/h	50%	35,000 Btu/h
Rack oven, single	Gas	Cooking	30%	43,000 Btu/h	50%	29,000 Btu/h
Range	Elec	Cooking	70%		80%	
Range	Gas	Cooking	35%	na	40% and no standing pilots	na
Steam cooker, batch cooking	Elec	Cooking	26%	200 W/pan	50%	135 W/pan
Steam cooker, batch cooking	Gas	Cooking	15%	2,500 Btu/h/pan	38%	2,100 Btu/h/pan
Steam cooker, high production or cook to order	Elec	Cooking	26%	330 W/pan	50%	275 W/pan
Steam cooker, high production or cook to order	Gas	Cooking	15%	5,000 Btu/h/pan	38%	4,300 Btu/h/pan
Toaster	Elec	Cooking	—	1.8 kW average operating	na	1.2 kW average operating energy

				energy rate		rate
Ice machine, IMH (ice-making head, H = ice harvest), H ≥ 450 lb/day	Elec	Ice	6.89 - 0.0011H kWh/100 lb ice	na	$37.72*H^{-0.298}$ kWh/100 lb ice	na
Ice machine, IMH (ice-making head), H ≤ 450 lb/day	Elec	Ice	10.26 – 0.0086H kWh/100 lb ice	na	$37.72*H^{-0.298}$ kWh/100 lb ice	na
Ice machine, RCU (remote condensing unit, w/o remote compressor, H < 1,000 lb/day	Elec	Ice	8.85 - 0.0038H kWh/100lb ice	na	$22.95*H^{-0.258}$ + 1.00 kWh/100 lb ice	na
Ice machine, RCU (remote condensing unit), 1600 > H ≥ 1000 lb/day	Elec	ice	5.10 kWh/100 lb ice	na	$22.95*H^{-0.258}$ + 1.00 kWh/100 lb ice	na
Ice machine, RCU (remote condensing unit), H ≥ 1600 lb/day	Elec	Ice	5.10 kWh/100lb ice	na	-0.00011*H + 4.60 kWh/100 lb ice	na
Ice machine, SCU (self-contained unit), H < 175 lb/day	Elec	Ice	18.0 - 0.0469H kWh/100lb ice	na	$48.66*H^{-0.326}$ + 0.08 kWh/100 lb ice	na
Ice machine self-contained unit, H ≥ 175 lb/day	Elec	Ice	9.80 kWh/100 lb ice	na	$48.66*H^{-0.326}$ + 0.08 kWh/100 lb ice	na
Ice machine, water-cooled ice-making	Elec	Ice	4.0 kWh/100 lb ice	na	3.68 kWh/100 lb ice	na

head, H ≥ 1436 lb/day (must be on chilled loop)						
Ice machine, water-cooled ice-making head, 500 lb/day < H < 1436 (must be on chilled loop)	Elec	Ice	5.58 – 0.0011H kWh/100 lb ice	na	5.13 - 0.001H kWh/100 lb ice	na
Ice machine, water-cooled ice-making head, H < 500 lb/day (must be on chilled loop)	Elec	Ice	7.80 – 0.0055H kWh/100 lb ice	na	7.02 - 0.0049H kWh/100 lb ice	na
Ice machine, water-cooled once-through (open loop)	Elec	Ice	Banned	Banned	Banned	Banned
Ice machine, water-cooled SCU (self-contained unit), H < 200 lb/day (must be on chilled loop)	Elec	Ice	11.4 – 0.0190H kWh/100 lb ice	na	10.6 - 0.177H kWh/100 lb ice	na
Ice machine, water-cooled self-contained unit, H ≥ 200 lb/day (must be on chilled loop)	Elec	Ice	7.6 kWh/100 lb ice	na	7.07 kWh/100 lb ice	na
Chest freezer, solid or glass door	Elec	Refrig	0.45V + 0.943 kWh/day	na	≤ 0.270V + 0.130 kWh/day	na
Chest refrigerator, solid or glass door	Elec	Refrig	0.1V + 2.04 kWh/day	na	≤ 0.125V + 0.475 kWh/day	na
Glass-door	Elec	Refrig	0.75V +	na	≤ 0.607V +	na

reach-in freezer, 0 < V < 15 ft³			4.10 kWh/day		0.893 kWh/day	
Glass-door reach-in freezer, 15 ≤ V < 30 ft³	Elec	Refrig	.75V + 4.10 kWh/day	na	≤ 0.733V – 1.00 kWh/day	na
Glass-door reach-in freezer, 30 ≤ V < 50 ft³	Elec	Refrig	.75V + 4.10 kWh/day	na	≤ 0.250V + 13.50 kWh/day	na
Glass-door reach-in freezer, 50 ≤ V ft³	Elec	Refrig	0.75V + 4.10 kWh/day	na	≤ 0.450V + 3.50 kWh/day	na
Glass-door reach-in refrigerator, 0 < V < 15 ft³	Elec	Refrig	0.12V + 3.34 kWh/day	na	≤ 0.118V + 1.382 kWh/day	na
Glass-door reach-in refrigerator, 15 ≤ V < 30 ft³	Elec	Refrig	0.12V + 3.34 kWh/day	na	≤ 0.140V + 1.050 kWh/day	na
Glass-door reach-in refrigerator, 30 ≤ V < 50 ft³	Elec	Refrig	0.12V + 3.34 kWh/day	na	≤ 0.088V + 2.625 kWh/day	na
Glass-door reach-in refrigerator, 50 ≤ V ft³	Elec	Refrig	0.12V + 3.34 kWh/day	na	≤ 0.110V + 1.500 kWh/day	na
Solid-door reach-in freezer, 0 < V < 15 ft³	Elec	Refrig	0.4V + 1.38 kWh/day	na	≤ 0.250V + 1.25 kWh/day	na
Solid-door reach-in freezer, 15 ≤ V < 30 ft³	Elec	Refrig	0.4V + 1.38 kWh/day	na	≤ 0.400V – 1.000 kWh/day	na
Solid-door reach-in freezer, 30 ≤ V < 50 ft³	Elec	Refrig	0.4V + 1.38 kWh/day	na	≤ 0.163V + 6.125 kWh/day	na
Solid-door reach-in freezer, 50 ≤ V ft³	Elec	Refrig	0.4V + 1.38 kWh/day	na	≤ 0.158V + 6.333 kWh/day	na
Solid-door reach-in refrigerator, 0 < V < 15 ft³	Elec	Refrig	0.1V + 2.04 kWh/day	na	≤ 0.089V + 1.411 kWh/day	na

Solid-door reach-in refrigerator, 15 ≤ V < 30 ft³	Elec	Refrig	0.1V + 2.04 kWh/day	na	≤ 0.037V + 2.200 kWh/day	na
Solid-door reach-in refrigerator, 30 ≤ V < 50 ft³	Elec	Refrig	0.1V + 2.04 kWh/day	na	≤ 0.056V + 1.635 kWh/day	na
Solid-door reach-in refrigerator, 50 ≤ V ft³	Elec	Refrig	0.1V + 2.04 kWh/day	na	≤ 0.060V + 1.416 kWh/day	na
Clothes washer	Gas	Sanitation	1.72 MEF	na	2.00 MEF	na
Door-type dish machine, high temp	Elec	Sanitation	na	1.0 kW	na	0.70 kW
Door-type dish machine, low temp	Elec	Sanitation	na	0.6 kW	na	0.6 kW
Multitank rack conveyor dish machine, high temp	Elec	Sanitation	na	2.6 kW	na	2.25 kW
Multitank rack conveyor dish machine, low temp	Elec	Sanitation	na	2.0 kW	na	2.0 kW
Single-tank rack conveyor dish machine, high temp	Elec	Sanitation	na	2.0 kW	na	1.5 kW
Single-tank rack conveyor dish machine, low temp	Elec	Sanitation	na	1.6 kW	na	1.5 kW
Undercounter dish machine, high temp	Elec	Sanitation	na	0.9 kW	na	0.5 kW
Undercounter dish machine, low temp	Elec	Sanitation	na	0.5 kW	na	0.5 kW
The energy efficiency, idle energy rates, and water use requirements, where applicable, are based on the following test methods:						

ASTM F1275 Standard Test Method for Performance of Griddles
ASTM F1361 Standard Test Method for Performance of Open Deep Fat Fryers
ASTM F1484 Standard Test Methods for Performance of Steam Cookers
ASTM F1496 Standard Test Method for Performance of Convection Ovens
ASTM F1521 Standard Test Methods for Performance of Range Tops
ASTM F1605 Standard Test Method for Performance of Double-Sided Griddles
ASTM F1639 Standard Test Method for Performance of Combination Ovens
ASTM F1695 Standard Test Method for Performance of Underfired Broilers
ASTM F1696 Standard Test Method for Energy Performance of Single-Rack Hot Water Sanitizing, ASTM Door-Type Commercial Dishwashing Machines
ASTM F1704 Standard Test Method for Capture and Containment Performance of Commercial Kitchen Exhaust Ventilation Systems
ASTM F1817 Standard Test Method for Performance of Conveyor Ovens
ASTM F1920 Standard Test Method for Energy Performance of Rack Conveyor, Hot Water Sanitizing, Commercial Dishwashing Machines
ASTM F2093 Standard Test Method for Performance of Rack Ovens
ASTM F2140 Standard Test Method for Performance of Hot Food Holding Cabinets
ASTM F2144 Standard Test Method for Performance of Large Open Vat Fryers
ASTM F2324 Standard Test Method for Prerinse Spray Valves
ASTM F2380 Standard Test Method for Performance of Conveyor Toasters
ARI 810-2007: Performance Rating of Automatic Commercial Ice Makers
ANSI/ASHRAE Standard 72–2005: Method of Testing Commercial Refrigerators and Freezers with temperature setpoints at 38°F for medium-temp refrigerators, 0°F for low-temp freezers, and -15°F for ice cream freezers

Table 1b. Commercial Kitchen Appliance Prescriptive Measures and Baseline for Energy Cost Budget (SI units)

	Baseline energy usage for energy modeling path				**Levels for prescriptive path**	
Appliance type	Fuel	Function	Baseline efficiency	Baseline idle rate	Prescriptive efficiency	Prescriptive idle rate
Broiler, underfired	Gas	Cooking	30%	50.5 kW/m^2	35%	37.9 kW/m^2
Combination oven, steam mode (P = pan capacity)	Elec	Cooking	40% steam mode	0.37P+4.5 kW	50% steam mode	0.133P+0.6400 kW
Combination oven, steam mode	Gas	Cooking	20% steam mode	(1 210P+ 35 810)/3 412 kW	38% steam mode	(200P+6 511)/ 3 412 kW
Combination oven, convection mode	Elec	Cooking	65% convection mode	0.1P+1.5 kW	70% convection mode	0.080P+0.4989 kW
Combination oven, convection mode	Gas	Cooking	35% convection mode	(322P+ 13 563)/ 3412 kW	44% convection mode	(150P+5 425)/ 3412 kW
Convection oven, full-size	Elec	Cooking	65%	2.0 kW	71%	1.6 kW
Convection	Gas	Cooking	30%	5.3 kW	46%	3.5 kW

oven, full-size						
Convection oven, half-size	Elec	Cooking	65%	1.5 kW	71%	1.0 kW
Conveyor oven, > 63.5 cm belt	Gas	Cooking	20%	20.5 kW	42%	16.7 kW
Conveyor oven, < 63.5 cm belt	Gas	Cooking	20%	13.2 kW	42%	8.5 kW
Fryer	Elec	Cooking	75%	1,05 kW	80%	1.0 kW
Fryer	Gas	Cooking	35%	4.1 kW	50%	2.64 kW
Griddle (based on 90-cm model)	Elec	Cooking	60%	4.3 kW/m^2	70%	3 .45 kW/m^2
Griddle (based on 90-cm model)	Gas	Cooking	30%	11 kW/m^2	33%	8.35 kW/m^2
Hot food holding cabinets (excluding drawer warmers and heated display) 0 < V < 0.368 m^3 (V = volume)	Elec	Cooking	na	1.4 kW/m^3	na	(21.5*V)/0.0283 kW/m^3
Hot food holding cabinets (excluding drawer warmers and heated display), 0.368 ≤ V < 0.793 m^3	Elec	Cooking	na	1.4 kW/m^3	na	(2.0*V + 254)/0.0283 kW/m^3
Hot food holding cabinets (excluding drawer warmers and heated display), 0.793 m^3 ≤ V	Elec	Cooking	na	1.4 kW/m^3	na	(3.8*V + 203.5)/0.0283 kW/m^3
Large vat fryer	Elec	Cooking	75%	1.35 kW	80%	1.1 kW
Large vat fryer	Gas	Cooking	35%	5.86 kW	50%	3.5 kW
Rack oven, double	Gas	Cooking	30%	19 kW	50%	10.25 kW
Rack oven, single	Gas	Cooking	30%	12.6 kW	50%	8.5 kW
Range	Elec	Cooking	70%	na	80%	na

Range	Gas	Cooking	35%	na	40% and no standing pilots	**na**
Steam cooker, batch cooking	Elec	Cooking	26%	200 W/pan	50%	135 W/pan
Steam cooker, batch cooking	Gas	Cooking	15%	733 W/pan	38%	615 W/pan
Steam cooker, high production or cook to order	Elec	Cooking	26%	330 W/pan	50%	275 W/pan
Steam cooker, high production or cook to order	Gas	Cooking	15%	1.47 kW/pan	38%	1.26 kW/pan
Toaster	Elec	Cooking	**na**	1.8 kW average operating energy rate	**na**	1.2 kW average operating energy rate
Ice machine, IMH (ice making head, H = ice harvest) H ≥ 204 kg/day	Elec	Ice	0.0015 - $5.3464E^{-07}$ kWh/kg ice	na	≤ $13.52*H^{-0.298}$ kWh/100 kg ice	na
Ice machine, IMH (ice making head), H < 204 kg/day	Elec	Ice	0.2262 - $4.18E^{-04}$ kWh/kg ice	na	≤ $13.52*H^{-0.298}$ kWh/100 kg ice	na
Ice machine, RCU (remote condensing unit, w/o remote compressor) H < 454 kg/day	Elec	Ice	0.1951 - $1.85E^{-04}$ kWh/kg ice	na	≤ $111.5835H^{-0.258}$) + 2.205 kWh/100 kg ice	na
Ice machine, RCU (remote condensing unit) 726 > H ≥ 454 kg/day	Elec	Ice	0.1124 kWh/kg ice	na	≤ $111.5835H^{-0.258}$) + 2.205 kWh/100 kg ice	na
Ice machine, RCU (remote condensing unit), H ≥ 726kg/day	Elec	Ice	0.1124 kWh/kg ice	na	≤ -0.00024H + 4.60 kWh/100 kg ice	na
Ice machine, SCU (self contained unit), H < 79 kg/day	Elec	Ice	0.3968 - $2.28E^{-03}$ kWh/kg ice	na	$236.59H^{-0.326}$ +0.176 kWh/100 kg ice	na
Ice machine, SCU (self contained	Elec	Ice	0.2161 kWh/kg ice	na	$236.59H^{-0.326}$ +0.176 kWh/100 kg	na

unit), H ≥ 79 kg/day					ice	
Ice machine, water-cooled ice-making head, H ≥ 651 kg/day(must be on a chilled loop)	Elec	Ice	0.0882 kWh/kg ice	na	≤ 8.11 kWh/100 kg ice	na
Ice machine, water-cooled ice-making head, 227 ≤ H < 651 kg/day (must be on a chilled loop)	Elec	Ice	0.1230 - 5.35E^{-05} kWh/kg ice	na	≤ 11.31 - 0.065H kWh/100 kg ice	na
Ice machine, water-cooled ice-making head, H < 227 kg/day(must be on a chilled loop)	Elec	Ice	0.1720 - 2.67E^{-04} kWh/kg ice	na	≤ 15.48 - 0.0238H kWh/100 kg ice	na
Ice machine, water-cooled once-through (open loop)	Elec	Ice	Banned	Banned	Banned	Banned
Ice machine, water cooled SCU (self-contained unit) H < 91 kg/day (must be on a chilled loop)	Elec	Ice	0.2513 - 9.23E^{-04} kWh/kg ice	na	≤ 23.37- 0.086H kWh/100 kg ice	na
Ice machine, water cooled SCU (self-contained unit) H ≥ 91 kg/day (must be on a chilled loop)	Elec	Ice	0.1676 kWh/kg ice	na	15.57 kWh/100 kg ice	na
Chest freezer, solid or glass door	Elec	Refrig	15.90V + 0.943 kWh/day	na	9.541V + 0.130 kWh/day	na
Chest refrigerator, solid or glass door	Elec	Refrig	3.53V + 2.04 kWh/day	na	≤ 4.417 V + 0.475 kWh/day	na
Glass-door reach-in freezer, 0 < V < 0.42 m^3	Elec	Refrig	26.50V + 4.1 kWh/day	na	≤ 21.449V + 0.893 kWh/day	na
Glass-door reach-in	Elec	Refrig	26.50V + 4.1	na	≤ 25.901V – 1.00	na

freezer, 0.42 ≤ V < 0.85 m^3			kWh/day		kWh/day	
Glass-door reach-in freezer, 0.85 ≤ V < 1.42 m^3	Elec	Refrig	26.50V + 4.1 kWh/day	na	≤ 8.834V + 13.50 kWh/day	na
Glass-door reach-in freezer, 1.42 ≤ V m^3	Elec	Refrig	26.50V + 4.1 kWh/day	na	≤ 15.90V + 3.50 kWh/day	na
Glass-door reach-in refrigerator, 0 < V < 0.42m^3	Elec	Refrig	4.24V + 3.34 kWh/day	na	≤ 4.169V + 1.382 kWh/day	na
Glass-door reach-in refrigerator, 0.42 ≤ V < 0.85 m^3	Elec	Refrig	4.24V + 3.34 kWh/day	na	≤ 4.947V + 1.050 kWh/day	na
Glass-door reach-in refrigerator, 0.85 ≤ V < 1.42 m^3	Elec	Refrig	4.24V + 3.34 kWh/day	na	≤ 3.109V + 2.625 kWh/day	na
Glass-door reach-in refrigerator, 1.42 ≤ V m^3	Elec	Refrig	4.24V + 3.34 kWh/day	na	≤ 3.887V + 1.500 kWh/day	na
Solid-door reach-in freezer, 0 < V < 0.42 m^3	Elec	Refrig	14.13V + 1.38 kWh/day	na	≤ 8.834V + 1.25 kWh/day	na
Solid-door reach-in freezer, 0.42 ≤ V < 0.85 m^3	Elec	Refrig	14.13V + 1.38 kWh/day	na	≤ 4.819V – 1.000 kWh/day	na
Solid-door reach-in freezer, 0.85 ≤ V < 1.42 m^3	Elec	Refrig	14.13V + 1.38 kWh/day	na	≤ 5.760V + 6.125 kWh/day	na
Solid-door reach-in freezer, 1.42 ≤ V m^3	Elec	Refrig	14.13V + 1.38 kWh/day	na	≤ 5.583V + 6.333 kWh/day	na
Solid-door reach-in refrigerator, 0 < V < 0.42m^3	Elec	Refrig	3.53V + 2.04 kWh/day	na	≤ 3.145V + 1.411 kWh/day	na
Solid-door reach-in refrigerator, 0.42 ≤ V < 0.85 m^3	Elec	Refrig	3.53V + 2.04 kWh/day	na	≤ 1.307V + 2.200 kWh/day	na
Solid-door reach-in refrigerator, 0.85 ≤ V < 1.42 m^3	Elec	Refrig	3.53V + 2.04 kWh/day	na	≤ 1.979V + 1.635 kWh/day	na

Solid-door reach-in refrigerator, 1.42 ≤ V m^3	Elec	Refrig	3.53V + 2.04 kWh/day	na	≤ 2.120V + 1.416 kWh/day	na
Clothes washer	Gas	Sanitation	1.72 MEF		2.00 MEF	
Door-type dish machine, high temp	Elec	Sanitation	na	1.0 kW	na	0.70 kW
Door-type dish machine, low temp	Elec	Sanitation	na	0.6 kW	na	0.6 kW
Multitank rack conveyor dish machine, high temp	Elec	Sanitation	na	2.6 kW	na	2.25 kW
Multitank rack conveyor dish machine, low temp	Elec	Sanitation	na	2.0 kW	na	2.0 kW
Single-tank rack conveyor dish machine, high temp	Elec	Sanitation	**na**	2.0 kW	na	1.5 kW
Single-tank rack conveyor dish machine, low temp	Elec	Sanitation	na	1.6 kW	na	1.5 kW
Undercounter dish machine, high temp	Elec	Sanitation	na	0.9 kW	na	0.5 kW
Undercounter dish machine, low temp	Elec	Sanitation	na	0.5 kW	na	0.5 kW
The energy efficiency, idle energy rates, and water use requirements, where applicable, are based on the following test methods: ASTM F1275 Standard Test Method for Performance of Griddles ASTM F1361 Standard Test Method for Performance of Open Deep Fat Fryers ASTM F1484 Standard Test Methods for Performance of Steam Cookers ASTM F1496 Standard Test Method for Performance of Convection Ovens ASTM F1521 Standard Test Methods for Performance of Range Tops ASTM F1605 Standard Test Method for Performance of Double-Sided Griddles ASTM F1639 Standard Test Method for Performance of Combination Ovens ASTM F1695 Standard Test Method for Performance of Underfired Broilers ASTM F1696 Standard Test Method for Energy Performance of Single-Rack Hot Water Sanitizing, ASTM Door-Type Commercial Dishwashing Machines						

ASTM F1704 Standard Test Method for Capture and Containment Performance of Commercial Kitchen Exhaust Ventilation Systems
ASTM F1817 Standard Test Method for Performance of Conveyor Ovens
ASTM F1920 Standard Test Method for Energy Performance of Rack Conveyor, Hot Water Sanitizing, Commercial Dishwashing Machines
ASTM F2093 Standard Test Method for Performance of Rack Ovens
ASTM F2140 Standard Test Method for Performance of Hot Food Holding Cabinets
ASTM F2144 Standard Test Method for Performance of Large Open Vat Fryers
ASTM F2324 Standard Test Method for Prerinse Spray Valves
ASTM F2380 Standard Test Method for Performance of Conveyor Toasters
ARI 810-2007: Performance Rating of Automatic Commercial Ice Makers
ANSI/ASHRAE Standard 72–2005: Method of Testing Commercial Refrigerators and Freezers with temperature setpoints at 38°F (3°C) for mediumtemp refrigerators, -18°C for low-temp freezers, and -26°C for ice cream freezers.

Table 2. Supermarket refrigeration prescriptive measures and baseline for energy cost budget

Item	Attribute	Prescriptive measure	Baseline for energy modeling path
Commercial Refrigerator and Freezers	Energy Use Limits	ASHRAE 90.1-2010 Addendum g. Table 6.8.1L	ASHRAE 90.1-2010 Addendum g. Table 6.8.1L
Commercial Refrigeration Equipment	Energy Use Limits	ASHRAE 90.1-2010 Addendum g. Table 6.8.1M	ASHRAE 90.1-2010 Addendum g. Table 6.8.1M

Table 3. Walk-in coolers and freezers prescriptive measures and baseline for energy cost budget

Item	Attribute	Prescriptive measure	Baseline for energy modeling path
Envelope	Freezer insulation	R-46	R-36
	Cooler insulation	R-36	R-20
	Automatic closer doors	Yes	No
	High-efficiency low- or no-heat reach-in doors	40W/ft (130W/m) of door frame (low temperature), 17W/ft (55W/m) of door frame (medium temperature)	40W/ft (130W/m) of door frame (low temperature), 17W/ft (55W/m) of door frame (medium temperature)
Evaporator	Evaporator fan motor and control	Shaded pole and split phase motors prohibited; use PSC or EMC motors	Constant-speed fan
	Hot gas defrost	No electric defrosting.	Electric defrosting
Condenser	Air-cooled condenser fan motor and control	Shaded pole and split phase motors prohibited; use PSC or EMC motors; add condenser fan controllers	Cycling one-speed fan
	Air Cooled condenser design approach	Floating head pressure controls or ambient subcooling	10°F (-12°C) to 15°F (-9°C) dependent on suction temperature
Lighting	Lighting power density (W/sq.ft.)	0.6 W/sq.ft. (6.5 W/sq. meter)	0.6 W/sq.ft. (6.5 W/sq. meter)

Commercial Refrigerator and Freezers	Energy Use Limits	N/A	Use an Exceptional Calculation Method if attempting to take savings
Commercial Refrigerator and Freezers	Energy Use Limits	N/A	Use an Exceptional Calculation Method if attempting to take savings

Table 4. Commercial kitchen ventilation prescriptive measures and baseline for energy cost budget

Strategies	Prescriptive measure	Baseline
Kitchen hood control	ASHRAE 90.1-2010 Section 6.5.7.1, except that Section 6.5.7.1.3 and Section 6.5.7.1.4 shall apply if the total kitchen exhaust airflow rate exceeds 2,000 cfm (960 L/s) (as opposed to 5,000 cfm (2,400 L/s) noted in the ASHRAE 90.1-2010 requirements)	ASHRAE 90.1-2010 Section 6.5.7.1 and Section G3.1.1 Exception (d) where applicable

EXHIBIT G-1

FORM OF GUARANTY

PAYMENT AND PERFORMANCE GUARANTY

This Payment and Performance Guaranty (this "**Guaranty**") is given this ___ day of ____, 202__, by Phillip Geuse, [a married/an unmarried] individual ("**Guarantor**"), for the benefit of the City of Santa Fe, a municipal corporation and political subdivision of the State of New Mexico (the "**City**").

RECITALS

A. The City owns the real property and improvements consisting of approximately 60 acres generally located within the block defined by Cerrillos Road, St. Michaels Drive, Llano Street, Siringo Road, and Camino Carlos Rey in the City of Santa Fe, County of Santa Fe, State of New Mexico, as generally depicted on Exhibit A attached hereto (the "**Midtown Site**").

B. ASPECT QOZB, LLC, a Delaware limited liability company ("**Developer**"), and the City entered into the Development and Disposition Agreement, dated of even date herewith (the "**DDA**"), pursuant to which Developer has agreed to, among other things, at Developer's sole cost and expense, to (i) redevelop the Property and (ii) pay the City the Purchase Price. Capitalized terms used but not defined herein shall have the meanings given to such terms in the DDA.

C. The City will lease the Property to Developer pursuant to the terms and conditions of the Lease to be entered into by Developer and the City as set forth in the DDA, for Developer to perform its obligations set forth in the DDA.

D. As a material inducement for the City to enter into the DDA and the Lease with Developer, Guarantor has agreed to guaranty to the City the prompt payment and performance of all the obligations of Developer under the DDA and the Lease.

E. Guarantor is [the sole member of] Developer, and as such, will receive direct, material and tangible benefits from Developer's development and lease of the Property and from the City entering into the DDA and Lease with Developer.

AGREEMENT

NOW, THEREFORE, intending to be legally bound, Guarantor, in consideration of the matters described in the foregoing Recitals and for other good and valuable consideration the receipt and sufficiency of which are acknowledged, hereby covenant and agree for the benefit of the City and its successors and assigns as follows:

1. Recitals. The recitals set forth above are incorporated herein by reference as if fully set forth in the body of this Guaranty.

2. Guaranteed Obligations. Guarantor hereby unconditionally and irrevocably guarantees to the City the full and complete performance of Developer's payment and performance obligations

under the DDA and the Lease in connection with Phase 1 and Developer's indemnification obligations pursuant to Section 14.3 with respect to all Phases, and agrees to indemnify and hold the City harmless from and against any and all costs or expenses, including litigation costs and reasonable attorneys' fees, arising from the City's enforcement of this Guaranty, whether incurred before or after judgment (collectively, the "**Guaranteed Obligations**").

3. Financial Covenants. Guarantor shall maintain (a) a minimum Net Worth of $5,000,000, as determined by the City based upon Guarantor's financial statements, and (b) minimum liquidity, in the form of unencumbered cash, cash-equivalents, and marketable securities of at least of $5,000,000 (each a "**Financial Requirement**"). "**Net Worth**" shall mean, as of a given date, (x) the total assets of Guarantor (excluding intangibles, such as goodwill) as of such date less (y) such Guarantor's total liabilities as of such date, determined in accordance with generally accepted accounting principles, consistently applied. Guarantor's failure to comply with any Financial Requirement for more than 30 consecutive days shall constitute a default hereunder (the "**Financial Default**"). Within 15 business days following a Financial Default, Guarantor shall provide a substitute guarantor acceptable to the City in its sole discretion. If Guarantor provides a substitute guarantor, the substitute guarantor shall meet each Financial Requirement, and if approved by the City, shall execute a performance and completion guaranty in the same form as this Guaranty. No later than 30 days after the end of each calendar quarter, Guarantor shall furnish to the MRA Director annual financial statements of Guarantor, which shall include a balance sheet, a statement of income, and contingent obligations of Guarantor, and shall be prepared in accordance with generally accepted accounting principles, consistently applied, and shall be certified as true and correct by Guarantor and reviewed by a certified public accountant who is not an employee or principal of Developer or its Affiliates. No later than sixty 30 days after filing, Guarantor shall furnish to the MRA Director signed copies of Guarantor's federal tax returns and including all extensions and all supporting schedules.

4. Guarantor Representations and Warranties. Guarantor represents to the City and acknowledges that Guarantor is an [married/unmarried] individual. Guarantor represents and warrants that Guarantor is fully informed of the terms of the DDA and the Lease and the remedies the City may pursue thereunder in the event the Guaranteed Obligations arise. Guarantor further represents and warrants to the City that the execution, delivery, and performance of this Guaranty by Guarantor does not violate the provisions of any applicable law or any agreement binding upon Guarantor, and that this Guaranty has been duly executed and delivered by Guarantor and constitutes a legally enforceable document.

5. Extent of Obligations; Waivers.

(a) In the event Developer fails to perform any of its obligations under the DDA or the Lease, the City may commence suit against Guarantor to enforce the provisions of this Guaranty, without first commencing any suit or otherwise proceeding against Developer or exhausting its remedies against Developer. Guarantor's liability under this Guaranty is primary. The City's rights shall not be exhausted by its exercise of any rights or remedies available to it at law and/or in equity or by any number of successive suits until and unless all obligations hereby guaranteed have been fully paid and performed. No circumstance that operates to discharge or to bar, suspend, or delay the City's right to enforce against Developer any obligation of Developer to the City (including but not limited to the effect of the pendency or conclusion of any proceeding under the federal Bankruptcy Code or any similar present or future federal or state law) shall have any effect upon the enforceability of Guarantor's obligations to the City hereunder. This Guaranty shall continue to be effective or be

reinstated (as the case may be) if at any time payment of all or any part of any sum is required to be returned by the City upon the insolvency, bankruptcy, dissolution, liquidation, or reorganization of Developer or Guarantor.

(b) The obligations of Guarantor hereunder shall remain in full force and effect without regard to, and shall not be affected or impaired by, (i) any modification or amendment to the DDA or Lease, whether or not Guarantor shall have received any notice of or consented to any such modification or amendment, (ii) the acceptance of partial payment of any Guaranteed Obligations (except to the extent that Guarantor's obligation hereunder shall be reduced accordingly); (iii) the granting of forbearances, compromises or adjustments with respect to any covenant or agreement under the DDA or Lease or claims thereunder; (iv) the dissolution or liquidation of the Developer; (v) an assignment of Developers rights and obligations (in whole or in part) to a third party; and (vi) any and all suretyship defenses or any circumstances which constitute a legal or equitable discharge of a guarantor or surety.

(c) Guarantor expressly waives all rights that Guarantor may have, if any, to require that any action be brought against Developer or any other person or entity in connection with the Guaranteed Obligations prior to demanding payment hereunder. Guarantor agrees that nothing contained herein shall prevent the City from exercising any rights available to the City under the DDA and the Lease and that the exercise of any of the aforesaid rights shall not constitute a legal or equitable discharge of any Guarantor until such time as the Guaranteed Obligations are paid in full. Guarantor agrees that Guarantor's liability as guarantor shall not be impaired or affected by the City's failure or election not to pursue any other remedies it may have against Guarantor, it being the intent hereof that Guarantor shall remain liable for the performance of the Obligations, notwithstanding any act or thing which might otherwise operate as a legal or equitable discharge of a surety.

6. Modification of Guaranty. This Guaranty constitutes the full and complete agreement between the parties hereto, and it is understood and agreed that the provisions hereof may only be modified by a writing executed by both parties hereto.

7. Gender, Singular/Plural. Words of any gender used in this Guaranty shall be held and construed to include any other gender, and words in the singular number shall be held to include the plural, unless the context otherwise requires.

8. Sections. References to section numbers are to sections in this Agreement, unless otherwise expressly stated.

9. Captions/Headings. Any captions or headings used in this Guaranty are for reference purposes only and are in no way to be construed as part of this Guaranty.

10. Invalidity. If any term, provision, covenant or condition of this Guaranty is held to be void, invalid, or unenforceable, the remainder of the provisions shall remain in full force and effect and shall in no way be affected, impaired, or invalidated.

11. Jurisdiction. Guarantor consents and submits to the jurisdiction of the federal and state courts located in the City and County of Santa Fe, New Mexico, and any suit shall be brought in a federal or state court located in the City and County of Santa Fe, New Mexico with appropriate

jurisdiction over the subject matter. Guarantor waives any defenses based on the venue, inconvenience of the forum, lack of personal jurisdiction or the like in any such suit.

12. Governing Law. This Guaranty shall be governed by and construed in accordance with the laws of the State of New Mexico.

13. Attorney's Fees. In the event it becomes necessary for the City to enforce any of the terms and provisions of this Guaranty, whether or not suit be instituted, Guarantor shall pay all of the City's costs and expenses incurred by the City in connection with the City's enforcement of this Guaranty, including, but not limited to, reasonable attorneys' fees.

14. Waiver of Jury Trial. TO THE EXTENT PERMITTED BY LAW, GUARANTOR HEREBY KNOWINGLY, INTENTIONALLY AND VOLUNTARILY, WITH AND UPON THE ADVICE OF COMPETENT COUNSEL, WAIVES, RELINQUISHES AND FOREVER FORGOES THE RIGHT TO A TRIAL BY JURY IN ANY ACTION OR PROCEEDING BASED UPON, ARISING OUT OF, OR IN ANY WAY RELATING TO THIS GUARANTY.

GUARANTOR ACKNOWLEDGES AND AGREES THAT ANY DISPUTE WHICH MAY ARISE UNDER THIS GUARANTY IS LIKELY TO INVOLVE COMPLICATED AND DIFFICULT ISSUES, AND THEREFORE IT HEREBY IRREVOCABLY AND UNCONDITIONALLY WAIVES ANY RIGHT IT MAY HAVE TO A TRIAL BY JURY IN RESPECT OF ANY LITIGATION DIRECTLY OR INDIRECTLY ARISING OUT OF OR RELATING TO THIS GUARANTY. GUARANTOR CERTIFIES AND ACKNOWLEDGES THAT (A) NO REPRESENTATIVE, AGENT OR ATTORNEY OF ANY OTHER PARTY HAS REPRESENTED, EXPRESSLY OR OTHERWISE, THAT SUCH OTHER PARTY WOULD NOT, IN THE EVENT OF LITIGATION, SEEK TO ENFORCE SUCH WAIVERS; (B) IT UNDERSTANDS AND HAS CONSIDERED THE IMPLICATIONS OF SUCH WAIVERS; (C) IT MAKES SUCH WAIVERS VOLUNTARILY.

15. Assignability. The City may assign this Guaranty in whole or in part at any time to any successor to the City's interest in the Guaranty. Guarantor shall not assign this Guaranty, in whole or in part, without the prior written consent of the City, in its sole discretion.

16. Successors and Assigns. This Guaranty shall be binding upon Guarantor and upon its heirs, successors and assigns.

17. New Mexico Tort Claims Act. The City's liability in connection with the Guaranty is limited by the immunities and limitations of the New Mexico Tort Claims Act, Section 41-4-1, et seq. NMSA 1978, as amended. The City and its "public employees", as defined in the New Mexico Tort Claims Act, do not waive sovereign immunity, do not waive any defense, and do not waive any limitation of liability pursuant to law. No provision of this Guaranty modifies or waives any provision of the New Mexico Tort Claims Act.

18. Public Records. Guarantor acknowledges that the City is a government entity and subject to the New Mexico Inspection of Public Records Act (Sections 14-2-1 et seq., NMSA 1978 ("**IPRA**"). Notwithstanding anything contained herein to the contrary, the City shall not be responsible to Guarantor or any third-party contractor for any disclosure of confidential information pursuant to

the IPRA or pursuant to the City's public records act laws, rules, regulations, instructions or other legal requirement.

19. Notices. Any notice, request, demand, instruction or other document to be given or served hereunder or under any document or instrument executed pursuant hereto shall be in writing and shall be delivered either personally with a receipt requested therefor, or by overnight courier, or by certified mail, return receipt requested, postage prepaid, in any case addressed to the parties at their respective addresses set forth below, and the same shall be effective (a) upon receipt or refusal if delivered personally, (b) one Business Day after depositing with such an overnight courier service, (c) three Business Days after deposit in the mail if mailed, or (d) upon successful electronic mail transmission evidenced by an electronic "read receipt" and provided that such notice is also delivered by the means described in clauses (a) or (b) within two Business Days after such electronic mail notice. All notices to the City or Guarantor shall be sent to the persons and addresses set forth below. Guarantor or the City may change its address for receipt of notices by service of a notice of such change in accordance herewith.

If to the City: City of Santa Fe
Attention: City Attorney's Office
200 Lincoln Avenue
Santa Fe, NM 87501

with a copy to: Midtown Redevelopment Agency
Attention: MRA Director
200 Lincoln Avenue
Santa Fe, NM 87501

If to Guarantor: Phillip Gesue
1954 Siringo Road
Santa Fe, NM 87505

with a copy to: Long, Komer & Associates, P.A.
Attention: Nancy R. Long
P.O. Box 5098
1800 Old Pecos Trail, Suite A
Santa Fe, NM 87505

[remainder of page intentionally left blank; signature page follows]

IN WITNESS WHEREOF, the undersigned has executed this Guaranty as of the date of first set forth above.

_____

Phillip Geuse, [a married/an unmarried] individual

[CONFIRM NOTARY BLOCK FOR STATE OF EXECUTION]

STATE OF _____)

) *ss.*

COUNTY OF _____)

The foregoing instrument was acknowledged before me this ____ day of _____, 20__, by _____ as the _____ of _____.

My commission expires:_____

JOINDER BY SPOUSE

[IF MARRIED]

The undersigned spouse of the above-named Guarantor consents that the Guaranty, (a) evidences such spouse's knowledge of the existence of this Guaranty and understanding of its contents, and (b) provides that this Guaranty binds all property jointly owned by Guarantor and such spouse (and the heirs, beneficiaries, administrators, executors, legal representatives and assigns of such spouse), and any such jointly owned property transferred to such spouse individually in respect of any liability under, and to the covenants, agreements, terms and conditions in, this Guaranty; provided, in no event shall such spouse's separate property (except for jointly owned property transferred to such spouse individually) be subject to liability under, or to the covenants, agreements, terms and conditions in, this Guaranty, or shall such spouse by this joinder assume any other individual liability of the Guarantor under this Guaranty.

Spouse: _____

[CONFIRM NOTARY BLOCK FOR STATE OF EXECUTION]

STATE OF _____)

) *ss.*

COUNTY OF _____)

The foregoing instrument was acknowledged before me this ____ day of _____, 20__, by _____ as the _____ of _____.

My commission expires:_____

EXHIBIT G-2

FORM OF BOND

_____ INSURANCE COMPANY
QUASI-PUBLIC IMPROVEMENTS PERFORMANCE BOND

Bond No. _____
Initial Premium $ _____
Subject to Renewal

KNOW ALL MEN BY THESE PRESENTS: That _____, a _____ ("Principal") and _____, a corporation duly authorized under the laws of the State of New Mexico to become surety on bonds and undertakings ("Surety"), are held and firmly bound unto the City of Santa Fe, New Mexico ("Obligee"), in the full and just sum _____ Dollars and _____Cents ($_____) lawful money of the United States of America, to be paid to Obligee, its successors or assigns; for which payment, well and truly to be made, Principal and Surety bind themselves, their heirs, executors, successors, administrators and assigns, jointly and severally, firmly by these presents.

THE CONDITION OF THE OBLIGATION IS SUCH THAT:

Whereas, Principal and Obligee have entered into that certain Development and Disposition Agreement, effective _____ ___, 20__ (the "DDA") whereby Principal agrees to install and complete certain designated quasi-public improvements according to the DDA. is hereby referred to and made a part hereof; and

Whereas, said Principal is required under the terms of the DDA to furnish a bond for the faithful performance of the terms of the DDA.

Now, if Principal, its successors or assigns, shall perform the covenants, conditions and provisions in the DDA and any alteration thereof made as therein provided, on its or their part, to be kept and performed at the time and in the manner therein specified, and in all respects according to their true intent and meaning, and shall indemnify and save harmless the Obligee, its officers, agents and employees, as therein stipulated, then this obligation shall become null and void; otherwise it shall be and remain in full force and effect.

Principal is responsible for all taxes and other costs incurred in fulfilling the requirements of the DDA. As a part of the obligation secured hereby and in addition to the face amount specified therefor, there shall be included costs and reasonable expenses and fees, including reasonable attorney's fees, incurred by Obligee in successfully enforcing such obligation, all to be taxed as costs and included in any judgment rendered.

The Surety hereby stipulates and agrees that no change, extension of time, alteration or addition to the terms of the DDA or to the work to be performed thereunder or the specifications accompanying the same shall in anywise affect its obligations on this bond, and it does hereby

waive notice of any such change, extension of time, alteration or addition to the terms of the agreement or to the work or to the specifications.

This bond is enforceable without the need to have recourse to any judicial or arbitral proceeding.

Surety is authorized with the New Mexico Secretary of State to do business in the State of New Mexico, and its registered agent in the State of New Mexico is _____. The appointment of said agent shall remain in place for the entire duration of this bond.

Notice required by or provided pursuant to this bond shall be given in writing to the representatives identified herein. Notice shall be effective upon personal delivery to any such representative or seven (7) business days after deposit, postage prepaid and registered or certified, in an official receptacle of the U.S. Postal Service. Notice to the City of Santa Fe shall be made to the Planning and Land Use Director at 200 Lincoln Avenue, Santa Fe, New Mexico 87504.

The laws of the State of New Mexico shall govern the interpretation, validity, performance and enforcement of this this bond. In the case of any controversy or dispute in the interpretation, validity, performance or enforcement of this bond, the exclusive venue shall be the New Mexico First Judicial District Court, Santa Fe County, New Mexico. Surety and Principal consent to the venue and the jurisdiction of such court.

IN WITNESS WHEREOF, the seal and signature of said Principal is hereto affixed and the corporate seal and the name of the Surety is hereto affixed and attested by its duly authorized [Attorney-in-Fact] at_, this _____day of_____.

PRINCIPAL:

_____, a _____

By: _____

_____

SURETY:

_____, a _____

By: _____

_____

IN WITNESS WHEREOF, the City of Santa Fe has agreed to this PERFORMANCE BOND as of the date of the signature by the required approval authorities below.

Acknowledged and Accepted for Compliance with LUD Case No.: 2022-5393, as per Planning Commission decision dated _____ ___, 20__:

City of Santa Fe

By: _____ _____
City Engineer Date
City of Santa Fe Land Use Department

EXHIBIT H

ASPECT ELECTRICAL LOOP PLANS

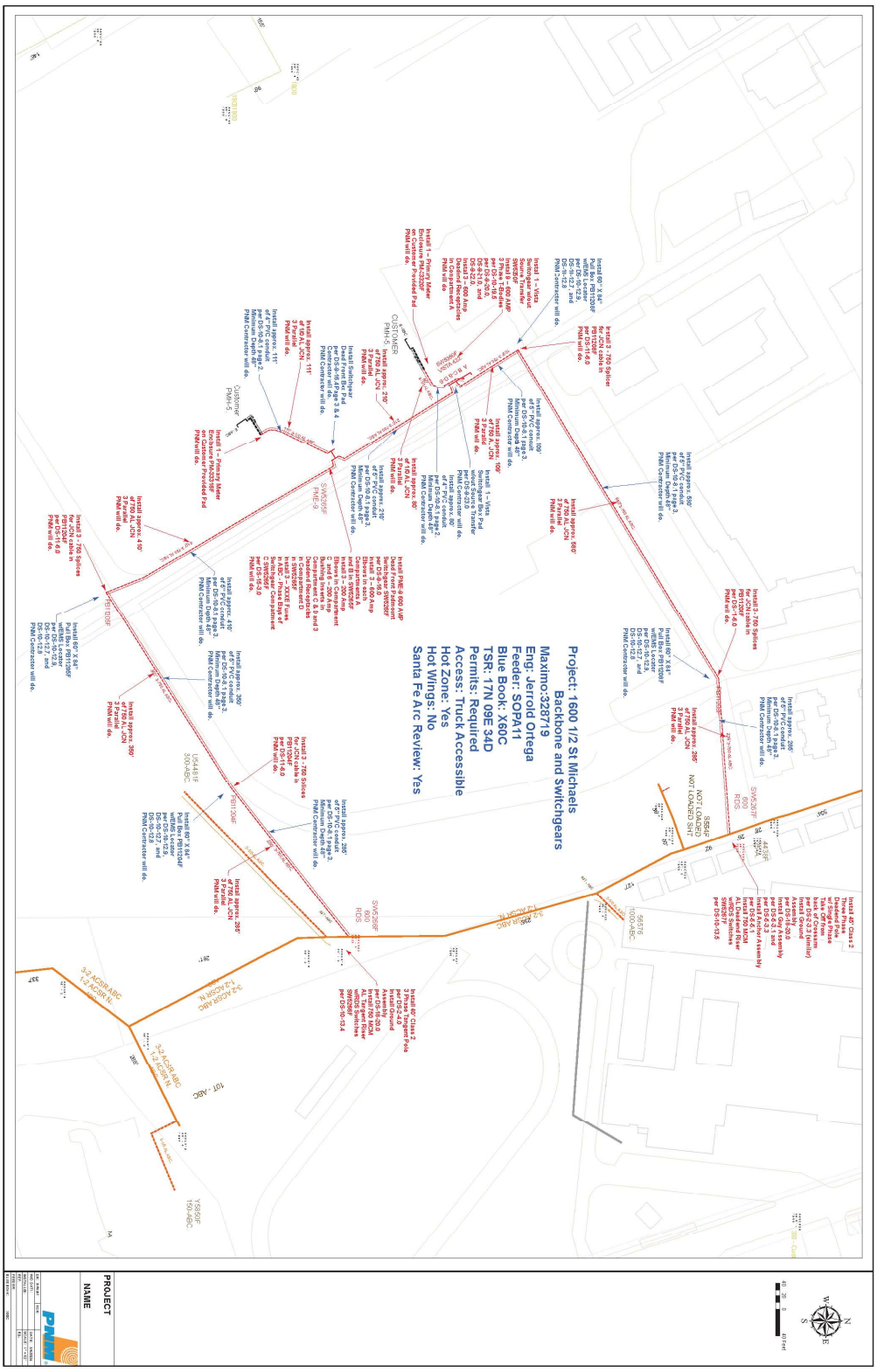

EXHIBIT I

LOCATION OF PROJECT RIGHT OF WAY IMPROVEMENTS

[attached]



ROW IMPROVEMENTS PHASE 1

ROW IMPROVEMENTS PHASE 2

SIRINGO ENTRANCE (to SIRINGO INTERSECTION)

ARTHOUSE IMPROVEMENTS

C.# 78' ROW

D.# 80' ROW

MIDTOWN SITE LAYOUT
RIGHT-OF-WAY (ROW) IMPROVEMENTS

0 25' 50'

WILSON &COMPANY

M:\MSD\23-600-027-00\2_DISCIPLINES_EXHIBITS\SITE LAYOUT ROW IMPROVEMENTS.DWG 9/4/2024 2:45 PM

EXHIBIT J

UTILITIES AGREEMENT

[attached]

UTILITIES AGREEMENT

THIS UTILITIES AGREEMENT (this "**Agreement**") is entered into effective as of the "Effective Date" under the DDA (as defined below) (the "**Effective Date**"), by and between **ASPECT QOZB, LLC**, a Delaware limited liability company ("**Developer**"), and the **CITY OF SANTA FE**, a municipal corporation and political subdivision of the State of New Mexico (the "**City**").

RECITALS:

A. The City owns the real property and improvements consisting of approximately 68.8 acres generally located within the block defined by Cerrillos Road, St. Michaels Drive, Llano Street, Siringo Road, and Camino Carlos Rey in the City of Santa Fe, County of Santa Fe, State of New Mexico, as generally depicted on Exhibit A attached hereto (the "**Midtown Site**").

B. The City and Developer are executing a Development and Disposition Agreement, dated as of the date hereof (the "**DDA**"), whereby Developer will re-develop and acquire approximately 11 acres of land comprising a portion of the Midtown Site, together with the buildings known as Benildus Hall, Onate Hall, Driscoll Fitness Center and Garson Studios (collectively, the "**Buildings**"), and all other existing accessory structures and improvements located thereon (collectively, the "**Property**").

C. The City and Developer intend to enter into a Lease Agreement (the "**Lease**"), for the purpose of leasing the Property to Developer to enable Developer to perform its obligations under the DDA, until such time as the City conveys the Property (or a portion thereof) to Developer pursuant to the terms thereof;

D. In connection with the Developer's development and operation of the Property, the City and Developer desire to enter into this Agreement in order to (i) enable to Developer to utilize certain utilities available at the Property, (ii) establish Developer's rights and obligations relating to the use of said utilities, and (iii) establish Developer's obligations relating to the modification or replacement of utilities at the Property, in each case subject to the terms and conditions set forth below.

AGREEMENT:

Developer and the City hereby agree as follows:

1. NATURAL GAS.

1.1 **Use; Submetering.** Subject to the terms and conditions of this Agreement, Developer shall have the right, during the Gas Utilization Period (as defined below), to utilize the natural gas service available at the Property by connecting to the existing natural gas lines thereon. Notwithstanding the foregoing, within 60 days after the Effective Date, as a condition to Developer's continued use of natural gas at the Property, Developer shall install, or cause to be installed, a natural gas submeter on the natural gas line providing gas to (a) the parcel on which Driscoll Studios is located and (b) the parcel on which Benildus Hall is located. Prior to construction or installation of any metering equipment or other utility facilities at the Property, Developer shall submit to the City a written request to proceed, which request shall set forth, for the City's approval, not to be unreasonably withheld, the name of Developer's contractor and the scope of work being performed.

1.2 **Pricing; Payment**.

(a) The price for the natural gas delivered to the Property shall initially be fixed at $12.78/MMBtu (the "**Gas Unit Price**"). On or before January 31st of each calendar year following the Effective Date, the City shall deliver to Developer written notice of its determination of the estimated

average Gas Unit Price for the current calendar year, which Gas Unit Price will be not less than 100% of the Gas Unit Price for the prior calendar year.

(b) Developer acknowledges that gas submeters have been installed on the natural gas lines serving the parcels commonly known as Shellaberger and Garson Studios. Within 3 business days after the Effective Date, Developer will email to the City a time-stamped photograph clearly depicting the current submeter reading for each of the submeters at Shellaberger and Garson Studios. Thereafter, within 15 days following the end of each calendar quarter during the Gas Utilization Period, Developer shall submit to the City (i) time-stamped photographs taken not more than 15 days prior to the date of Developer's submission that clearly depict the submeter reading for each of the submeters at Schellaberger, Garson Studios, Driscoll Studios and Benildus Hall, and (ii) payment, by check or other good funds made to the order of the City, in the amount of the Gas Unit Price multiplied by the total MMBtu used at the Property over the prior period (i.e., the difference between the current meter value set forth on the photographs provided therewith over the meter value shown on the photographs submitted with the immediately preceding payment (or the initial meter value, as applicable)). Any amounts not paid when due will accrue interest at rate of 1.5% per month.

1.3 **Gas Utilization Period; Disconnection.** Provided the Lease remains in effect and Developer is not in default thereunder, or, if the Lease is not in effect, that Developer is the fee owner of the Property, Developer shall have the right to use natural gas at the Property until the earlier of the seventh anniversary of the Effective Date or the date upon which the City ceases to use gas service at the property. (the "**Gas Utilization Period**"). Prior to the expiration of the Gas Utilization Period, Developer shall cause all natural gas use at the Property to be terminated and each of the natural gas lines at the Property to be disconnected from the City's connecting distribution lines.

2. ELECTRICAL SUPPLY.

2.1 **Use; Submetering.** Subject to the terms and conditions of this Agreement, Developer shall have the right, during the Electrical Use Period (as defined below), to use the electricity service available at the Property by connecting to the existing electrical utility lines thereon. Notwithstanding the foregoing, within 60 days after the Effective Date, as a condition to Developer's continued use of City-provided electricity at the Property, Developer shall install, or cause to be installed, an electrical submeter on the utility line providing electricity to (a) the parcel on which Driscoll Studios is located and (b) the parcel on which Benildus Hall is located. Prior to construction or installation of any metering equipment or other utility facilities at the Property, Developer shall submit to the City a written request to proceed, which request shall set forth, for the City's approval, not to be unreasonably withheld, the name of Developer's contractor and the scope of work being performed.

2.2 **Pricing; Payment**.

(a) The price for the electricity delivered to the Property shall initially be fixed at $0.11/kWh (the "**kWh Price**"). On or before January 31st of each calendar year following the Effective Date, the City shall deliver to Developer written notice of its determination of the estimated average kWh Price for the current calendar year, which kWh Price will be not less than 100% of the kWh Price for the prior calendar year.

(b) Developer acknowledges that electrical submeters have been installed on the transmission lines serving the parcels commonly known as Shellaberger and Garson Studios. Within 3 business days after the Effective Date, Developer will email to the City a time-stamped photograph clearly depicting the current submeter reading for each of the electrical submeters at Shellaberger and Garson Studios. Thereafter, within 15 days following the end of each calendar quarter during the Electricity Utilization Period, Developer shall submit to the City (i) time-stamped photographs taken not

more than 15 days prior to the date of Developer's submission that clearly depict the submeter reading for each of the submeters at Shellaberger, Garson Studios, Driscoll Studios, and Benildus Hall, and (ii) payment, by check or other good funds made to the order of the City, in the amount of the kWh Price multiplied by the total kWh of electricity used at the Property over the prior period (i.e., the difference between the current meter value set forth on the photographs provided therewith over the meter value shown on the photographs submitted with the immediately preceding payment (or the initial meter value, as applicable)). Any amounts not paid when due will accrue interest at rate of 1.5% per month.

2.3 **Electricity Utilization Period; Disconnection.** Provided the Lease remains in effect and Developer is not in default thereunder, or, if the Lease is not in effect, that Developer is the fee owner of the Property, Developer shall have the right to use the City-provided electricity serving the Property during the period beginning on the Effective Date and ending on the date 60 days after Developer's completion of the electrical transmission loop further described in the DDA (the "**Electricity Utilization Period**"). Prior to the expiration of the Electricity Utilization Period, Developer shall disconnect the Property's electrical distribution network from the City's transmission lines, and all existing buildings, new buildings, and structures constructed at the Property shall receive electrical service via the electrical transmission loop described in the DDA, excluding Benildus Hall which may remain on the City's transmission lines.

3. WATER SERVICE; METERING. Within 60 days after the Effective Date, (a) the City will cause the Water Division to terminate the City's account(s) at the Property, (b) Developer shall install a separate water meter on the water lines serving each of (i) the parcel on which Driscoll Studios is located and (ii) the parcel on which Benildus Hall is located. Following the City's termination of its water account at the Property, Developer shall establish a new billing account with the City's Water Division in Developer's name and shall thereafter be responsible for all costs and expenses relating to the water service at the Property. Prior to construction or installation of any metering equipment or other utility facilities at the Property, Developer shall submit to the City a written request to proceed, which request shall set forth, for the City's approval, not to be unreasonably withheld, the name of Developer's contractor and the scope of work being performed. Developer shall obtain water rights through the water rights transfer program or the water conservation credit program or through a combination of both.

4. TELECOMMUNICATIONS AND INTERNET. Developer is responsible for the installation of all required telecommunications and internet lines.

5. MAINTENANCE. Except with respect to any damage caused by the City, Developer shall be responsible for all maintenance, repair and replacement of the meters, submeters and utility lines or facilities located at the Property, up to and including the interconnections of the meters, submeters and utility lines or facilities at any points along the adjacent Property lines. Except with respect to any damage caused by Developer or its licensees or invitees, the City is responsible for all of the City's transmission facilities and equipment on the other side of the interconnection, provided that the City shall not be responsible for any of the foregoing to the extent the same are owned or operated by a third-party utility provider.

6. INDEMNITY. Developer shall indemnify, hold harmless and, if requested by the City (in the City's sole discretion), defend the City and its partners, employees, agents and representatives and each of their successors and assigns (together with the City, collectively, the "**City Indemnified Parties**"), from and against any and all damages, mechanics' liens, liabilities, losses, demands, actions, causes of action, claims, costs and expenses (including reasonable attorneys' fees) (collectively, "**Losses**") arising from Developer's or Developer's Representatives' construction, installation or use of the natural gas, electricity, water or other utilities on or with respect to the Property during the term of this Agreement; provided, that Developer shall not be required to indemnify the City for (i) any Losses arising out of the gross negligence or willful misconduct of any of the City's Indemnified Parties.

7. **INSURANCE.** Developer shall maintain, or cause to be maintained, at all times during the construction or installation of utility facilities or equipment at the Property, the insurance coverage required pursuant to the DDA and/or the Lease. Developer shall deliver proof of the insurance coverage required pursuant to this Agreement to the City (in the form of a certificate of insurance) prior to Developer (or any contractor) commencing work at the Property.

8. **TERMINATION.** This Agreement shall terminate upon the expiration or earlier termination of the Lease, unless as a result of Developer acquiring fee title to the Property. If not sooner terminated, this Agreement shall expire on the later of the expiration of the Gas Utilization Period and the Electricity Utilization Period, except that Sections 1.2, 2.2, 5, and 6 of this Agreement shall survive the termination hereof for a period of one year.

9. **NON-ASSIGNABILITY.** This Agreement may not be assigned without first obtaining the prior written approval of the non-assigning party.

10. **GOVERNING LAW.** This Agreement shall be governed by the laws of the State of New Mexico.

11. **NOTICES.** Any notices required by any provision of this Agreement shall be made in writing and delivered in the manner set forth in the DDA.

12. **COUNTERPARTS; ELECTRONIC/.PDF SIGNATURES.** This Agreement may be executed in any number of identical counterparts. This Agreement may be executed by electronic and/or .pdf signatures which shall be binding on the parties hereto, with original signatures to be delivered as soon as reasonably practical thereafter.

[signature page follows]

IN WITNESS WHEREOF, Developer and the City have caused this Agreement to be executed as of the Effective Date.

DEVELOPER:
ASPECT QOZB, LLC,
a Delaware limited liability company

By: _____
Name: Phillip Greve
Title: Managing Member
Date: 10-24-2024

[City's signature page follows]

CITY:

CITY OF SANTA FE,
a municipal corporation and political subdivision of the State of New Mexico

_____
MAYOR

DATE:_____

ATTEST:

_____
CITY CLERK

CITY ATTORNEY'S OFFICE:

_____
ASSISTANT CITY ATTORNEY

APPROVED FOR FINANCES:

_____
FINANCE DIRECTOR

EXHIBIT K

FORM OF EDUCATIONAL USE COVENANTS

[attached]

Recording Requested By,
And When Recorded Return To:

CITY OF SANTA FE
200 LINCOLN AVENUE
SANTA FE, NM 87501
ATTN: ERIN MCSHERRY, CITY ATTORNEY

EDUCATIONAL USE COVENANT

THIS **EDUCATIONAL SPACE COVENANT** (this **"Covenant"**) is declared as of _____, 202__ (the **"Effective Date"**), by the CITY OF SANTA FE, a municipal corporation and political subdivision of the State of New Mexico (the "**City**").

RECITALS

A. The City owns the real property and improvements consisting of approximately 64 acres generally located within the block defined by Cerrillos Road, St. Michaels Drive, Llano Street, Siringo Road, and Camino Carlos Rey in the City of Santa Fe, County of Santa Fe, State of New Mexico (the "**Midtown Site**").

B. The City desires to create certain obligations and duties and to impose certain restrictions and covenants upon the portion of the Midtown Site legally described on Exhibit A (the "**Property**").

AGREEMENT

NOW, THEREFORE, the City hereby declares that the Property shall be held, conveyed, encumbered, leased, used, developed, occupied, altered, improved, and transferred subject to the terms and provisions set forth in this Covenant, and further declares as follows:

1. Defined Terms.

(a) "**Educator**" means any organization or establishment dedicated to providing formal instruction and learning experiences to individuals, through a college, university, academy, vocational, technical, business, professional school or other center of learning.

1. "**FP Educator**" means an Educator having its principal operation in New Mexico that exclusively offers an FP Program in such Educator's then current curriculum, such as, but not limited to, organizations such as Stagecoach Foundation or Santa Fe Community College.

(b) "**FP Program**" means a filmmaking, film production and or television provision training program, which includes classroom training and access to additional multimedia and filmmaking and film production space for practical training opportunities, with a curriculum based on best industry practices and then current technology.

(c) "**General Educator**" means an Educator that offers a General Program in such Educator's then current curriculum.

(d) "**General Program**" means a general training and educational program, which may include classroom and practical training, for the advancement of skills in a variety of industries.

2. Educational Use Covenants.

(a) During the period commencing on the Effective Date and continuing in perpetuity thereafter (the "**Term**"), any owner of fee title interest in the Property (each, an "**Owner**") shall, or shall cause any tenant or other occupant of the Property, to make available at least 2,000 square feet of office, classroom, studio and/or workspace (the "**Education Space**"), at no charge, to one or more FP Educators for an FP Program each academic year; provided, however, if no FP Educator exists in New Mexico that is willing to provide an FP Program in the Education Space, Owner shall, or shall cause any tenant or other occupant of the Property, to make the Education Space available to a General Educator.

(b) Owner shall, or shall cause any tenant or other occupant of the Property to use its best efforts to ensure that each FP Educator (or General Educator, if applicable) utilizing the Education Space:

(i) makes such FP Program (or General Program, if applicable) available to the residents of Santa Fe, New Mexico;

(ii) conducts commercially reasonable outreach and recruitment efforts to the surrounding communities, community organizations, including to residents of Santa Fe, and outreach to community-based partners selected by the City to provide outreach to the community, or other stakeholders as identified by the City;

(iii) efficiently utilizes the Education Space to accommodate the maximum number of students for the applicable FP Program or General Program, subject to Applicable Rules; and

(iv) operates an FP Program (or General Program, if applicable) in the Education Space for at least 50 credit hours in each academic year.

(c) To the extent the Property is owned or occupied by multiple Owners, the obligations of this Section 2 shall be deemed satisfied for the entire Property so long as one Owner is in compliance with this Covenant.

3. Fee in Lieu. Notwithstanding the foregoing, any Owner may satisfy this Covenant by remitting to the City a fee ("**Fee in Lieu**") in the amount of $1,500,000, increased as of the payment date of such Fee in Lieu by the percentage increase in the Consumer Price Index from the Effective Date to the date such payment. "**Consumer Price Index**" means the Consumer Price Index for All Urban Consumers for the West Region for all Items (1982-1984= 100) as published by the United States Department of Labor, Bureau of Labor Statistics. If the manner in which the Consumer Price Index is determined by the Bureau of Labor Statistics shall be substantially revised (including a change in the base index year), an adjustment shall be made by the City Manager in

such revised index that produces results equivalent, as nearly as possible, to those which would have been obtained if the Consumer Price Index had not been so revised. If the Consumer Price Index is discontinued, then "Consumer Price Index" shall mean an index chosen by City Manager which is, in City Manager's reasonable judgment, comparable to the index specified above. Upon payment in full of the Fee in Lieu to the City, this Covenant shall terminate and be of no further force or effect.

4. Compliance with Laws. Any Owner, tenant or other occupant of the Property shall carry out the operation of the Property in conformity with the then-current versions of the following: (a) the Santa Fe City Code of 1987, as amended from time-to-time, (b) the Midtown Master Plan, as adopted on November 30, 2022 pursuant to Resolution No. 2022-68, (c) the Midtown Community Development Plan, as adopted on January 25, 2023 pursuant to Resolution No. 2023-5, (d) the Midtown Local Innovation Corridor District, as adopted on October 26, 2016 pursuant to Ordinance No. 2016-39, (e) any other City-approved development plans and entitlements for the Property, and (f) any and all applicable local, state and federal laws, rules and regulations affecting the Property or otherwise applicable to the parties (collectively, with the provisions of this Covenant, the "**Applicable Rules**").

5. Indemnity. Any Owner shall indemnify, defend and hold harmless the City (including the governing body of the City), the metropolitan redevelopment agency for the Midtown Site, and each of their respective officials, officers, employees, agents, representatives and volunteers (collectively, including the City, the "**City Parties**"), from and against any and all liabilities, claims, demands, damages, expenses, fees (including attorneys' fees), fines, penalties, suits, proceedings, actions and causes of action of any and every kind or nature arising from the acts or omission of or the breach of this Covenant, including any violation of Applicable Rules, by any Owner, any of such Owner's officers, employees, agents, representatives, contractors, or any FP Educator.

6. Remedies. The City shall have all remedies available at law or equity to enforce this Covenant against an Owner that is violating such Covenant, provided that the City agrees not to exercise such remedies so long as such Owner commences and diligently proceeds to cure such violation within 30 days following written notice of violation from the City to such Owner, and cures such violation within 90 days thereafter. In the event it becomes necessary for the City to enforce any of the terms and provisions of this Covenant, whether or not suit be instituted, Owner shall pay all of the City's costs and expenses incurred by the City in connection with the City's enforcement of this Covenant, including, but not limited to, reasonable attorneys' fees.

7. Miscellaneous.

(a) Entire Agreement. This Covenant contains the entire declaration of Declarant with respect to the subject matter hereof, and may not be amended or modified except by an instrument executed in writing and signed by the Declarant hereto.

(b) Counterparts. This Covenant may be executed in any number of counterparts, each of which shall be deemed an original, but all of which together shall constitute one and the same instrument.

(c) Governing Law. This Covenant shall be governed by and construed in accordance with the laws of the State of New Mexico without regard to the conflicts of laws principles thereof.

(d) Successors and Assigns. This Covenant shall be binding upon and inure to the benefit of the City, and all rights and responsibilities set forth in this Covenant shall be appurtenant to the Property. Any party acquiring title or an interest in the Property shall acquire and hold the title to the Property subject to the conditions and restrictions declared in this Covenant and all amendments thereto. Nothing in this Covenant shall be construed as preventing any Owner from dedicating additional space to a FP Educator or imposing additional restrictions on the Property; provided, however, that such additional restrictions may not interfere with the rights of the City hereunder.

(e) Severability. If any provision of this Covenant as applied to a particular circumstance shall be adjudicated as or otherwise become invalid or unenforceable, the remainder of this Covenant shall not be affected thereby, and each provision of this Covenant, unless specifically conditioned upon such invalid or unenforceable provision, shall be valid and enforceable to the fullest extent permitted by law.

(f) New Mexico Tort Claims Act. The City's liability in connection with the Covenant is limited by the immunities and limitations of the New Mexico Tort Claims Act, Section 41-4-1, et seq. NMSA 1978, as amended. The City and its "public employees", as defined in the New Mexico Tort Claims Act, do not waive sovereign immunity, do not waive any defense, and do not waive any limitation of liability pursuant to law. No provision of this Covenant modifies or waives any provision of the New Mexico Tort Claims Act.

(g) Notice. All notices or other communications required or permitted to be sent to Declarant hereunder shall be in writing, and shall be delivered to the address below by (i) personal delivery (including by means of professional messenger service); (ii) nationally recognized overnight courier; (iii) registered or certified mail, postage prepaid, return receipt requested; (iv) electronic mail, or electronic transmission of a pdf document followed by delivery of a hard copy through on of the methods described in (i) through (iii) above, and shall be deemed received upon the date of receipt thereof.

To the City:

City of Santa Fe
Attention: [_____]
[_____]
[_____]
Santa Fe, NM [_____]
Telephone No.: [_____]
Email: [_____]

with a copy to:

Midtown Redevelopment Agency
Attention: [_____]
[_____]
[_____]

Santa Fe, NM [_____]
Telephone No.: [_____]
Email: [_____]

[Signature Pages Immediately Follow]

IN WITNESS WHEREOF, Declarant has caused this Educational Use Covenant to be executed as of the date first above written.

Date of City of Santa Fe Governing Body
Approval: _____, 20__

CITY/DECLARANT:

CITY OF SANTA FE,
a municipal corporation and political subdivision of the State of New Mexico

By: _____

City Manager

APPROVED AS TO FORM:

By: _____

City Attorney

ATTEST:

By: _____

City Clerk

STATE OF NEW MEXICO }
} ss.
COUNTY OF SANTA FE }

This instrument was acknowledged before me on _____, 20__ by _____ as _____ of City of Santa Fe, a municipal corporation and political subdivision of the State of New Mexico.

(Seal, if any)

_____
(Signature of Notarial Officer)

[*Signatures and acknowledgements continue on the following page*]

Exhibit A

The Property

[To be attached]

EXHIBIT L

FORM OF ASSIGNMENT OF PLANS

ASSIGNMENT OF PLANS, SPECIFICATIONS AND CONTRACTS

(MIDTOWN – CITY OF SANTA FE)

THIS ASSIGNMENT OF PLANS, SPECIFICATIONS AND CONTRACTS (this "**Assignment**") is made as of _____, ___ 20__, by and between by and between [_____], a [_____] ("**Assignor**"), and the CITY OF SANTA FE, a municipal corporation and political subdivision of the State of New Mexico ("**Assignee**").

RECITALS

A. Assignor and Assignee entered into that certain Development and Disposition Agreement dated [_____] (as amended, the "**Development Agreement**"), whereby Assignee agreed to sell and Assignor agreed to purchase all of the Assignor's right, title and interest in and to certain real property located in the City of Santa Fe, New Mexico, as more particularly described on Exhibit A attached hereto (the "**Property**"). Capitalized terms used but not defined herein shall have the meaning given to such terms in the Development Agreement.

B. In connection with the foregoing transaction, Assignor agreed to pursue the completion of certain improvement plans, site plans, specifications, architectural drawings, renderings, plans, plats, agreements, contracts, permits, certificates, entitlements and approvals, reports, assessments, studies, and surveys relating to Assignor's development and construction at the Property (except to the extent excluded pursuant to Section 3 below, the "**Plans and Specifications**").

C. In connection with the completion of the Plans and Specifications, Assignor has engaged or intends to enter into one or more agreements (the "**Plan Consultant Contracts**" and, collectively with the Plans and Specifications, the "**Plan Documents**") with various consultants that will perform services or provide documents, materials or other information related to the Plans and Specifications.

D. In order to secure Assignor's obligations under the Development Agreement, Assignor now desires to enter into this Assignment to assign and convey to Assignee its right, title and interest in and to the Plans and Specifications on the Assignment Date and certain Plan Consultant Contracts concurrently therewith or thereafter, and Assignee desires to accept this Assignment on the terms and conditions set forth herein.

AGREEMENT

NOW THEREFORE, for good and valuable consideration, the receipt whereof is hereby acknowledged, the parties agree as follows:

1. Incorporation of Recitals. The Recitals set forth above are hereby incorporated into this Assignment as if fully set forth herein.

2. **Assignment Date**. This Assignment shall become immediately effective upon the termination of the Development Agreement for any reason other than in connection with Assignor's acquisition of the Property (the "**Assignment Date**").

3. **Assignment of Plans and Specifications**. As of the Assignment Date, without further action by either party hereto, for good and valuable consideration, the receipt and sufficiency of which are hereby acknowledged, Assignor hereby transfers and assigns to Assignee all of Assignor's right, title, and interest in and to the Plans and Specifications, and Assignee hereby assumes all of Assignor's right, title and interest in and to the Plans and Specifications, except that Assignor shall remain liable for all claims, expenses, costs, obligations or other liabilities with respect to the Plans and Specifications arising out of or with respect to events occurring prior to the Assignment Date. On or before the Assignment Date, Assignor shall amend Schedule 1 attached hereto in order to include all professional services and Plan Consultant Contracts entered into on or prior to such date. The Plans and Specifications assigned hereunder shall exclude (a) any attorney-client work product or similar proprietary information of Assignor, (b) any specifications, architectural drawings, renderings, plans, plats, agreements, contracts, or portions thereof, for the design or construction of improvements not located on the Property (i.e., the Shellaberger Tennis Complex), and (c) any environmental studies, analysis or reports.

4. **Assignment of Plan Consultant Contracts**. Assignor shall, upon written notice from Assignee on or within 10 days following the Assignment Date, assign and transfer to Assignee, all of Assignor's right, title, and interest in and to such Plan Consultant Contracts specified by Assignee in its written notice, and Assignee shall assume all of Assignor's rights and obligations under such Plan Consultant Contracts, except for those claims, expenses, costs, obligations or other liabilities arising out of or with respect to events occurring prior to the Assignment Date.

5. **Representations, Warranties and Covenants**. Assignor represents and warrants to Assignee that Assignor has the right to assign to Assignee each of the Plan Documents, and that Assignor has obtained or will obtain all necessary consents or other documentation required, if any, for the assignment of the Plan Documents. Assignor agrees that Assignor will pay in full all costs and fees accrued in connection with the Plan Documents as of the Assignment Date. Assignor shall not be responsible for the costs associated with the Plan Documents for work performed following the Assignment Date. Except as set forth in this Agreement, Assignor makes no representation or warranty with respect to the Plan Documents of any nature whatsoever.

6. **Consent of Counterparties.** Upon Assignee's request, Assignor shall use commercially reasonable efforts to obtain the consent of the counterparty to each of the Plan Documents to the extent consent is required in order for Assignee to exercise its rights hereunder.

7. **Further Assurances.** At any time and from time to time, upon the written request of Assignee, at Assignee's sole expense, Assignor will promptly and duly execute and deliver any and all such further instruments and documents and take such further action as Assignee may reasonably deem necessary in obtaining the full benefits of this Agreement and of the rights and powers herein granted.

8. General Provisions.

8.1. Successors and Assigns. The Assignment shall be binding on and inure to the benefit of the parties hereto and to their respective heirs, executors, administrators, successors-in-interest and assigns.

8.2. Severability. If any one or more of the provisions contained in this Assignment shall for any reason be held to be invalid, illegal or unenforceable in any respect, such invalidity, illegality or unenforceability shall not affect any other provision of this Assignment, but this Assignment shall be construed as if such invalid, illegal or unenforceable provision had never been contained herein.

8.3. Recitals and Schedules Incorporated. The recitals set forth above and the schedule attached hereto are hereby incorporated into this Assignment as if set forth herein.

8.4. Counterparts. This Assignment may be executed in any number of counterparts, each of which shall be deemed an original, but all of which taken together shall constitute one and the same instrument, and either of the parties hereto may execute this Assignment by signing any such counterpart. This Assignment may be executed and delivered by facsimile or by electronic mail in portable document format (.pdf) or similar means and delivery of the signature page by such method will be deemed to have the same effect as if the original signature had been delivered to the other party.

8.5. Governing Law. This Assignment and any claims related to or arising out of this Assignment shall be governed by and construed in accordance with the laws of the State of New Mexico.

[Remainder of Page Intentionally Blank]

IN WITNESS WHEREOF, Assignor and Assignee have executed this Assignment as of the Effective Date.

ASSIGNOR:
ASPECT QOZB, LLC,
a Delaware limited liability company

By: _____

Name: _____

Title: _____

Date: _____

[Assignee's signature page follows]

CITY:

CITY OF SANTA FE,
a municipal corporation and political subdivision of the State of New Mexico

_____
CITY MANAGER

DATE:_____

ATTEST:

_____
CITY CLERK

CITY ATTORNEY'S OFFICE:

_____
ASSISTANT CITY ATTORNEY

APPROVED FOR FINANCES:

_____
FINANCE DIRECTOR

Exhibit A

to

Assignment of Plans, Specifications and Contracts

LEGAL DESCRIPTION

[to be inserted]

Schedule 1

to

Assignment of Plans, Specifications and Contracts

LIST OF ASSIGNOR'S PLANS

1. [to be provided]

EXHIBIT M

FORM OF REPORT

[attached]

Phase 1 Quarterly Construction Report				
Effective Date of DDA			Date of Report Time Period Covered	
		Date Complete or Anticipated	Summary of Progress & Obstacles Encountered	List of Supporting Documents
Phase 1- Component 1				
Name of Component				
Submit Concept Plans	NA			
Submit Design Plans	All components submitted 120 days after Lease Commencement Date. (5.2.2)			
Date of MRA-Approved Component Design Plans				
Submit Building Permit	30 days from Phase 1 MRA-Approved Component Design Plans (5.2.7)			
Obtain Development Approvals				
Building Permit				
Development Plan/Zoning Review				
Other (please name)				
Other (please name)				
Commence Construction	45 days after Developer receives its building permit and zoning approval for component (5.2.8)			
Complete Construction	12 months after Phase 1 Commencement Date. (5.2.9)			

Exhibit M: Report Template (may be amended by City)

Phase 1 Quarterly Construction Report				
Effective Date of DDA			Date of Report Time Period Covered	
		Date Complete or Anticipated	Summary of Progress & Obstacles Encountered	List of Supporting Documents
Phase 1- Component 2				
Name of Component				
Submit Concept Plans	NA			
Submit Design Plans	All components submitted 120 days after Lease Commencement Date. (5.2.2)			
Date of MRA-Approved Component Design Plans				
Submit Building Permit	30 days from Phase 1 MRA-Approved Component Design Plans (5.2.7)			
Obtain Development Approvals				
Building Permit				
Development Plan/Zoning Review				
Other (please name)				
Other (please name)				
Commence Construction	45 days after Developer receives its building permit and zoning approval for said component (5.2.8)			
Complete Construction	12 months after Phase 1 Commencement Date. (5.2.9)			

Phase 1 Quarterly Construction Report				
Effective Date of DDA			Date of Report Time Period Covered	
		Date Complete or Anticipated	Summary of Progress & Obstacles Encountered	List of Supporting Documents
	Phase 1- Component 3			
Name of Component				
Submit Concept Plans	NA			
Submit Design Plans	All components submitted 120 days after Lease Commencement Date. (5.2.2)			
Date of MRA-Approved Component Design Plans				
Submit Building Permit	30 days from Phase 1 MRA-Approved Component Design Plans (5.2.7)			
Obtain Development Approvals				
Building Permit				
Development Plan/Zoning Review				
Other (please name)				
Other (please name)				
Commence Construction	45 days after Developer receives its building permit and zoning approval for said component (5.2.8)			
Complete Construction	12 months after Phase 1 Commencement Date. (5.2.9)			

Phase 1 Quarterly Construction Report				
Effective Date of DDA			Date of Report Time Period Covered	
		Date Complete or Anticipated	Summary of Progress & Obstacles Encountered	List of Supporting Documents
	Phase 1- Component 4			
Name of Component				
Submit Concept Plans	NA			
Submit Design Plans	All components submitted 120 days after Lease Commencement Date. (5.2.2)			
Date of MRA-Approved Component Design Plans				
Submit Building Permit	30 days from Phase 1 MRA-Approved Component Design Plans (5.2.7)			
Obtain Development Approvals				
Building Permit				
Development Plan/Zoning Review				
Other (please name)				
Other (please name)				
Commence Construction	45 days after Developer receives its building permit and zoning approval for said component (5.2.8)			
Construction Completion	12 months after Phase 1 Commencement Date. (5.2.9)			
	Closing			
Delivery of Closing Conditions	90 days from Construction Completion (10.2)			

Phase 2 Quarterly Construction Report				
Effective Date of DDA			Date of Report Time Period Covered	
		Date Complete or Anticipated	Summary of Progress & Obstacles Encountered	List of Supporting Documents
Phase 2				
Name of Component				
Submit Concept Plans	9 months after the Lease Commencement Date (5.3.1)			
Submit Design Plans	12 months from Lease Commencement Date (5.4.2)			
Date of MRA-Approved Design Plans				
Submit Building Permit	4 months after receipt of the Phase 2 MRA-Approved Design Plans (5.3.7)			
Obtain Development Approvals				
Building Permit				
Development Plan/Zoning Review				
Other (please name)				
Other (please name)				
Commence Construction	45 days after Developer receives its building permit and zoning approval (5.3.8)			
Construction Completion	18 months after Phase 2 Commencement Date (5.3.9)			
Delivery of Closing Conditions	90 days from Construction Completion (10.3)			

Phase 3 Quarterly Construction Report				
Effective Date of DDA			Date of Report Time Period Covered	
		Date Complete or Anticipated	Summary of Progress & Obstacles Encountered	List of Supporting Documents
Phase 3				
Name of Component				
Submit Concept Plans	27 months after the Lease Commencement Date (5.4.1)			
Submit Design Plans	33 months of the Lease Commencement Date (5.4.2)			
Date of MRA-Approved Design Plans				
Submit Building Permit	4 months after receipt of the Phase 3 MRA-Approved Design Plans (5.4.7)			
Obtain Development Approvals				
Building Permit				
Development Plan/Zoning Review				
Other (please name)				
Other (please name)				
Commence Construction	45 days after Developer receives its building permit and zoning approval (5.4.8)			
Construction Completion	18 months after the Phase 3 Commencement Date (5.4.9)			
Delivery of Closing Conditions	90 days from Construction Completion (10.4)			

Annual Program Report			
Effective Date of DDA		**Date of Report**	
		Time Period Covered	
11.2 Economic Impact		**Explain any variance from DDA Requirements**	**Supporting Documentation**
	State the Annual Production Spend for Previous Year		
11.3 Job Postings		**Explain any variance from DDA Requirements**	**Supporting Documentation**
	List of job postings circulated during the prior year per the DDA		
11.4 Commercial Use Requirement		**Explain any variance from DDA Requirements**	**Supporting Documentation**
	Screen Tenant:		
	Months in Public Operation:		
	Notes:		
	Driscoll Restaurant Tenant:		
	Months in Public Operation:		
	Notes:		

11.5 Film Internship Requirements.	Explain any variance from DDA Requirements	Supporting Documentation
List the Internships provided, (first initial/last name, length of time, total number of hours)		

11.6 Cultural Elements	Explain any variance from DDA Requirements	Supporting Documentation
List the events and activities held that meet the Cultural Element Requirement		

11.7 Dedication of Educational Space	Explain any variance from DDA Requirements	Supporting Documentation
List the educational programs, users, and number of attendees that utilized the educational space		

EXHIBIT N

REQUIRED USES

Tract F-1b, G-1, I-1a, I-1b and L-1a:

Table 5.5.A Allowed Uses	MU-F
Industrial	
Light assembly and manufacturing	P

Tract F-1b:

Table 5.5.A Allowed Uses	MU-F
Food and Beverage	
Restaurant – full service, with or without incidental alcohol service [1]	P

Tract F-1a:

Table 5.5.A Allowed Uses	
Residential	
Household Living	
Dwelling, multiple-family	P

[1] Not to exceed 5,000 square feet of gross floor area

EXHIBIT O

PHASING DEPICTION

[to be attached]

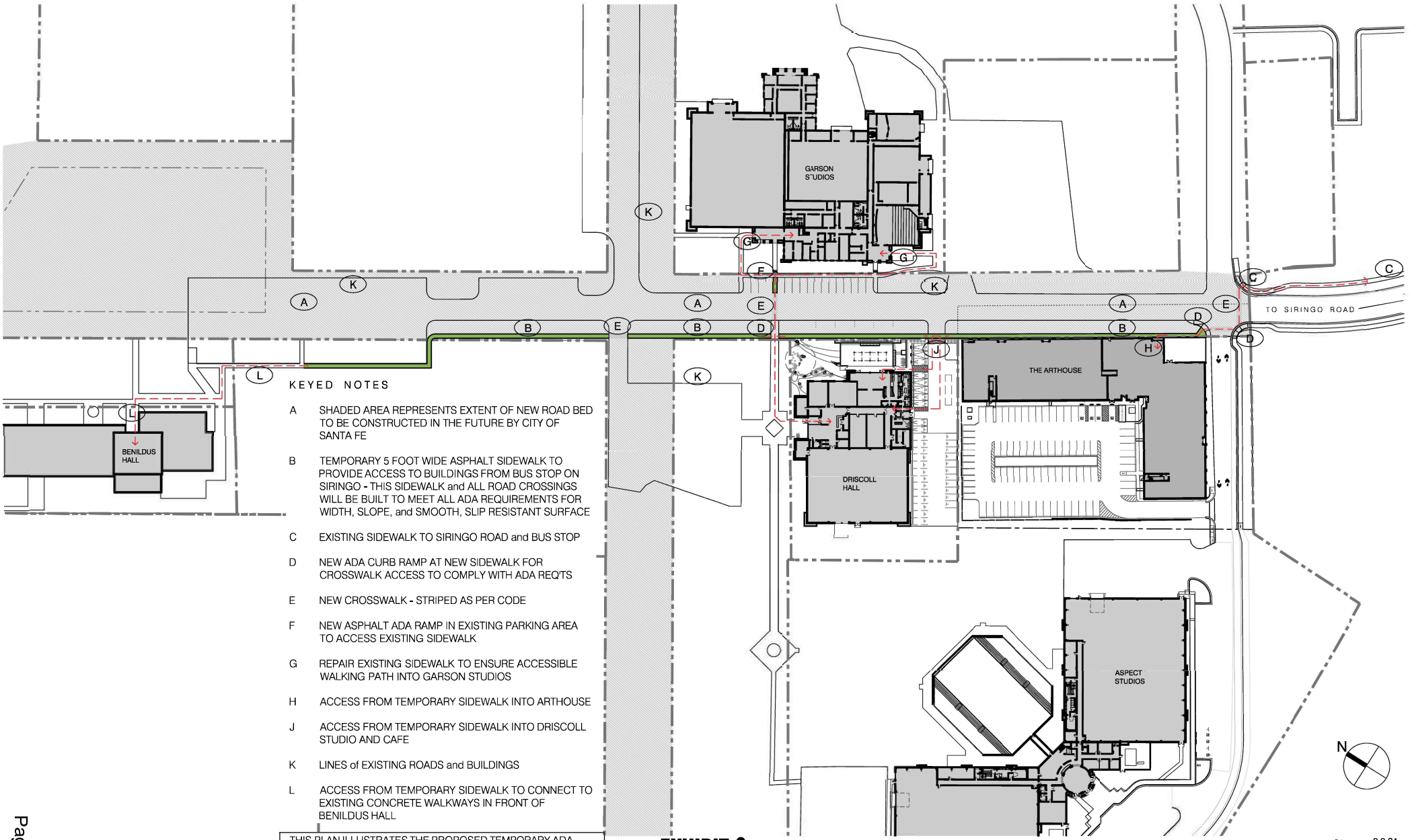

KEYED NOTES

A SHADED AREA REPRESENTS EXTENT OF NEW ROAD BED TO BE CONSTRUCTED IN THE FUTURE BY CITY OF SANTA FE

B TEMPORARY 5 FOOT WIDE ASPHALT SIDEWALK TO PROVIDE ACCESS TO BUILDINGS FROM BUS STOP ON SIRINGO - THIS SIDEWALK and ALL ROAD CROSSINGS WILL BE BUILT TO MEET ALL ADA REQUIREMENTS FOR WIDTH, SLOPE, and SMOOTH, SLIP RESISTANT SURFACE

C EXISTING SIDEWALK TO SIRINGO ROAD and BUS STOP

D NEW ADA CURB RAMP AT NEW SIDEWALK FOR CROSSWALK ACCESS TO COMPLY WITH ADA REQ'TS

E NEW CROSSWALK - STRIPED AS PER CODE

F NEW ASPHALT ADA RAMP IN EXISTING PARKING AREA TO ACCESS EXISTING SIDEWALK

G REPAIR EXISTING SIDEWALK TO ENSURE ACCESSIBLE WALKING PATH INTO GARSON STUDIOS

H ACCESS FROM TEMPORARY SIDEWALK INTO ARTHOUSE

J ACCESS FROM TEMPORARY SIDEWALK INTO DRISCOLL STUDIO AND CAFE

K LINES of EXISTING ROADS and BUILDINGS

L ACCESS FROM TEMPORARY SIDEWALK TO CONNECT TO EXISTING CONCRETE WALKWAYS IN FRONT OF BENILDUS HALL

THIS PLAN ILLUSTRATES THE PROPOSED TEMPORARY ADA AND PEDESTRIAN EGRESS FOR USE AFTER COMPLETION OF THE ARTHOUSE, DRISCOLL HALL, GARSON STUDIOS, and BENILDUS HALL, AND BEFORE THE COMPLETION OF SHADED ROADWAY BY THE CITY OF SANTA FE.

PLAN A ARCHITECTURE
505-820-1460

EXHIBIT 0

MIDTOWN DISTRICT
Santa Fe, New Mexico

Date: 9-9-24
Scale: 1 : 200

TEMPORARY ADA and PEDESTRIAN EGRESS PLAN

FIR No. 10627

FISCAL IMPACT REPORT

General Information:

(Check) **Bill:** X **Resolution:** _____

Short Title(s): Approval of Midtown Studios Development and Disposition

Sponsor(s): Mayor Alan Webber

Reviewing Department(s): City Attorney's Office, Metropolitan Redevelopment Agency, Public Works

Staff Completing FIR: Pat Feghali **Date:** 9/23/24 **Phone:** 505-955-6501

Reviewed by City Attorney: _____ **Date:** Oct 25, 2024

Reviewed by Finance Director: Emily K. Oster **Date:** Oct 25, 2024

Summary:
The City of Santa Fe ("City") and Midtown Santa Fe Productions QOF, LLC ("Offeror") entered into an Exclusive Negotiation Agreement on August 4, 2023 in order to agree to a plan for Offeror to improve and purchase certain parcels of the Midtown Site, located at 1600 St Michaels Drive ("Property"). The City and ASPECT QOZB, LLC ("Purchaser"), successor to Offeror, are now entering into a Development and Disposition Agreement for the Property.

NMSA 1987, Section 3-54-1 requires that the City approve the sale of City-owned property with an Ordinance. This Bill is created to comply with that statute.

Departments Affected:
Community Development Department (MRA), Public Works Department

Consequences of Not Enacting Legislation:
If this legislation is not adopted, the Development and Disposition Agreement cannot move forward, and the City would need to identify a new process for developing the affected parcels at Midtown

Conflict, Duplication, Companionship, or Relationship to Other Legislation:
Related to Resolution 2022-68, Midtown Master Plan Approval; and Resolution 2023-5, Midtown Community Development Plan Approval

Performance and Administrative Implications:
This Sale will transfer up to seven parcels from City ownership to private ownership.

Fiscal Implications:
The Developer will pay $5 million over the course of this sale, in four installments, assuming the Developer completes all three phases. The first should be in FY 2025, and the last in FY 2031.

Fiscal Impact

_____ Check here if no fiscal impact

Expenditures

Expenditure Type	FYE 2025	FYE 2026	FYE 2027	Require BAR (Y/N)	Recurring (R) or Non-recurring (NR)	Fund	3-Year Total Cost
Personnel and Benefits*	$	$	$				
Capital Outlay	$	$	$				
Contractual/ Professional Services	$	$	$				
Operating	$	$	$				$
Total:	$ 0	$ 0	$ 0				$

Expenditure Narrative:

Revenue

Revenue Type	FYE 2025	FYE 2026	FYE 2027	Recurring (R) or Non-recurring (NR)	Fund
General Fund	$1,000,000	$	$2,250,000	NR	
Special Revenue	$	$	$		
CIP	$	$	$		
Enterprise	$	$	$		
Internal Service	$	$	$		
Trust and Agency	$	$	$		
Federal	$	$	$		
Other	$	$	$		
Total	$	$	$		

Revenue Narrative:

The revenue from these sales is due to take place in four installments, for a total of $5,000,000, if all phases of the project are complete:

- $1,000,000 is due to the City at the Effective Date of the Development and Disposition Agreement, which should be in FY 2025.
- $2,250,000 is due at the end of Phase 1, which should be in FY 2027.
- $1,250,000 is due at the end of Phase 2, which should be FY 2029.
- $500,000 is due at the end of Phase 3, which should be FY 2031.

Signature: Daniel Hernandez
Daniel Hernandez (Oct 25, 2024 16:50 MDT)

Email: dahernandez@santafenm.gov

Signature:

Email: rrandall@santafenm.gov

Date: October 23, 2024

To: Governing Body, Public Works and Utilities Committee, Quality of Life Committee, Finance Committee, and Economic Development Advisory Committee

From: Daniel Hernandez, Metropolitan Redevelopment Agency Director

Via: Randy Randall, Interim Community Development Director

Subject: **Lease Summary in connection with the Disposition and Development Agreement (DDA) by and between the City of Santa Fe and Aspect QOZB, LLC**

A summary of terms provided in the Lease Agreement by and between the City of Santa Fe ("City") and Aspect QOZB, LLC ("Developer") are outlined below:

Lease Term

- The Lease becomes effective on the date that the approved DDA goes into effect, which will be 45 days after the Ordinance is approved, unless a referendum is held. If a referendum is held and a majority of voters vote to approve the Ordinance, the effective date shall be the date the election results are certified. If a referendum is held and a majority of voters vote to disapprove the Ordinance, the Ordinance shall not be effective, and the Lease will not start.
- This Lease expires 10 years following the Lease Commencement Date ("Term").
- If the Developer elects to acquire the portion of property associated with any Phase upon completion of an applicable Phase pursuant to the terms of the DDA, then upon the closing of the conveyance of such Phase, the Lease terminates with respect to such portion of property that has been conveyed to the Developer.
- The Lease terminates in its entirety upon the earlier of (a) the expiration of the Term, (b) Developer's default under the terms of the DDA or the Lease, (c) upon the City's conveyance of all of the Property to Developer pursuant to the terms of the DDA, or (d) Developer's termination of the DDA as permitted under the DDA.

Lease Payments

- Developer is required to pay to the City the total base rent of $300,000.00 during the 10-year term of the Lease, payable in annual installments of $30,000.00.

If Developer fails to pay Rent when due exceeding notice and cure periods, then interest accrues at the rate of 18% per year on the amount due and unpaid, compounded monthly, so long as the amount remains unpaid.

Triple Net Lease

The Lease is a triple net lease, meaning that Developer will pay rent, utilities, and all operating expenses for the Property.

- The Lease is made on an “as is, where is” condition of property basis, and the City is not responsible for any repairs or maintenance of the Property.

Date: October 23, 2024

To: Governing Body, Public Works and Utilities Committee, Quality of Life Committee, Finance Committee, and Economic Development Advisory Committee

From: Daniel Hernandez, Metropolitan Redevelopment Agency Director

Via: Randy Randall, Interim Community Development Director

Subject: **Purchase Price Consideration for the Disposition and Development Agreement (DDA) by and between the City of Santa Fe and Aspect QOZB, LLC**

Pursuant to State statute, Section 3-54-1(B), NMSA 1978, when a municipality elects to sell real property, an appraisal is required to be submitted in writing to the governing body. In this case there were two appraisals that are included in this packet and are summarized here:

- Pursuant to an appraisal of the Property (as defined in the DDA) prepared for the City by Hippauf Dry & Connelly with an effective date of valuation as of November 15, 2023, the value of the fee interest in the Property is approximately $11,400,000 exclusive of (i) the cost to construct the public infrastructure, (ii) the value of the community development benefits, and (iii) the contractual obligations and risk of recourse set forth in this Agreement. Pursuant to an appraisal of the Property prepared for QOF by CB Richard Ellis on February 23, 2024, the value of the fee interest in the Property was determined to be approximately $4,800,000, exclusive of (i) the value of the community development benefits, (ii) the contractual obligations and risk of recourse set forth in this Agreement, and (iii) the costs and risk of entitlement.

The State statute also requires that, if a sale price that is less than the appraised value, the governing body shall cause a must have a detailed written explanation of that difference, to be prepared, which written explanation is hereby included in the legislative packet provided in connection with the public hearing for review of the DDA.

In this case, the City issued a competitive Request for Proposals that required proposals for developing the property and offering community benefits, in addition to payment for the Property. The current Purchaser is a successor in interest to the winning Offeror of the RFP and the resulting agreement requires development and community benefits, in addition to $5,000,000. Thus, the payment alone exceeds the value of one appraisal. City staff have also determined that the Agreement's required payments, Property development, and community benefits exceed the higher appraised value of the Property and that the disposition is in the best interests of the City.

PRICE CONSIDERATION ANALYSIS	*Real Property *(City's appraisal)*	$11,400,000
Midtown Production Studios	Personal Property *(est.)*	$25,000
	TOTAL	**$11,425,000**
Aspect Studios DDA		
Purchase Price		$5,000,000
Lease Payments	$30,000/year x 10 years	$300,000
Economic:		
Income: commitment for studio production direct NM expenditures: $150M	Based on formula in previous LEDA deals= $1M for every $50M in production spend	$3,000,000
Education: 2,000 sq. ft. of space restricted in perpetuity	2,000 x $18 (class B rents) x 20yrs	$720,000
Internships: 20 interns/yr x 20 yrs	$3000/intern/year (6wks; 40 hrs; $20/hr; 1.25 for employment costs; X.5)	$1,200,000
Equity:		
Affordable Housing: 99-150 housing units= 15-23 Affordable Housing Units	NA: Proforma provides adequate return	
Culture:		
Operation of Screen and Community Programming	$1,000/event X12 events X20 years	$240,000
Environment:		
Solar requirement/disconnecting from Gas	None: Economic Benefit in long term	
EV Charging Stations- 3 level 3+ 2 level 2	$50,000/ Level 3 + Public Use ($2,000/yr; 20 yrs)	$240,000
Other DDA Requirements		

Master Infrastructure - PNM Loop	Not included: estimate based on Essential Utilites, Inc dated 08-2023	
Contractual Risk/Obligation To Act	15% of value	$1,710,000
	TOTAL	**$12,410,000**
	Above / (Below) appraised value	$985,000

**Hippauf Dry & Connelly, Effective Date of Valuation: Nov-15-2023, page 107*

ATTACHMENTS:

November 15, 2023 Appraisal

February 23, 2024 Appraisal

CBRE VALUATION & ADVISORY SERVICES

APPRAISAL REPORT

SANTA FE COLLEGE OF ARTS (PORTION OF)
1600 ST MICHAELS DR
SANTA FE, NEW MEXICO 87505
CBRE FILE NO. CB23US105690-1

CLIENT: MIDTOWN SANTA FE PRODUCTIONS QOF, LLC

CBRE

CBRE

6100 Uptown Boulevard NE, Suite 300
Albuquerque, NM 87110

T (505) 837-4999
F (505) 837-4994

www.cbre.com

Date of Report: February 23, 2024

Mr. Phillip Gesue

MIDTOWN SANTA FE PRODUCTIONS QOF, LLC
1 Worth St
New York, New York 10013

RE: Appraisal of: Santa Fe College of Arts (portion of)
1600 St Michaels Dr
Santa Fe, Santa Fe County, New Mexico 87505
CBRE, Inc. File No. CB23US105690-1

Dear Mr. Gesue:

At your request and authorization, CBRE, Inc. has prepared an appraisal of the market value of the referenced property. Our analysis is presented in the following Appraisal Report.

The subject consists of a portion of a former college campus, St. Michael's College, with roughly 500,000 square feet in numerous buildings, built from the 1850s through 2005, situated on a 64 acre site. The Santa Fe University of Art and Design vacated the property in 2018.

Since 2020, the City of Santa Fe has initiated large-scale redevelopment plans for the subject property and film studio production began in earnest with most useable buildings leased with annual terms for film productions. In March of 2022, the adjacent 8.6-acre Shellaberger Tennis Center was purchased for $6.7 million by PE Real Estate. In late 2022, the community issued an RFP for redevelopment, and in 2023 the Midtown Santa Fe plan was adopted, including planned uses such as affordable housing, arts, and film on the campus.

In March of 2023, PE Real Estate Holdings, which had previously purchased the Shellaberger property, submitted a proposal for redevelopment and expansion of the subject property as a "Studio Village." This included a purchase offer to the City of Santa Fe for $6,500,000, and included the buildings of Benildus Hall, Driscoll Fitness Center, and Garson Studio Complex, and Alumni Hall Special Events Center.

Subsequent negotiations have resulted in an alteration of the real property to be included. This analysis considers the Benildus Hall Classroom Building, 27,277 square feet, the Driscoll Fitness Center, 22,200 square feet, and the Garson Studio Complex, 49,200 square feet. The Alumni Hall is excluded. We were provided with preliminary site plans showing the land to be included

© 2024 CBRE, Inc.

at roughly 11.83 acres attributed to these three buildings. This is a low land-to-building ratio for the property type, indicating some land potentially available for future expansion or for additional parking. There is an additional building on the site, Onate Hall, which has no contributory value, and will be razed for future development. The parcels are indicated as Lots 4 (Benildus), 9 (Garson Complex), 11 (adjacent to Garson), 10 (Driscoll), 8 (adjacent to Driscoll) and 12 (vacant land) on the Midtown Site Layout provided by Wilson and Company.

There were no tenants or leases in place. For this reason, we have valued the property in Fee Simple Estate, developing an opinion of value based on market sales, as well as our pro forma development of market rent and income. Each of the buildings was inspected by Wilson and Co. engineering firm in January, 2023, with a total of over $5.7 Million in noted deferred maintenance. The engineer also prepared a cost estimate for site work of $2.5 million for bringing all utilities to code, but this included off-site work attributable to the entire campus rather than simply the subject property. For this reason we have estimated an additional $500,000 expense for site and infrastructural work. This figure, with an entrepreneurial incentive of 15%, is applied to the total indicated value upon completion of repairs, in order to determine the value of the property as is.

At the request of our client, the effective date of value is as of November 15, 2023. Based on the analysis contained in the following report, the market value of the subject is concluded as follows:

MARKET VALUE CONCLUSION

Appraisal Premise	Interest Appraised	Date of Value	Value Conclusion
As Is	Fee Simple Estate	November 15, 2023	$4,800,000

Compiled by CBRE

The report, in its entirety, including all assumptions and limiting conditions, is an integral part of, and inseparable from, this letter.

The following appraisal sets forth the most pertinent data gathered, the techniques employed, and the reasoning leading to the opinion of value. The analyses, opinions and conclusions were developed based on, and this report has been prepared in conformance with, the guidelines and recommendations set forth in the Uniform Standards of Professional Appraisal Practice (USPAP), and the requirements of the Code of Professional Ethics and Standards of Professional Appraisal Practice of the Appraisal Institute.

The intended use and user of our report are specifically identified in our report as agreed upon in our contract for services and/or reliance language found in the report. As a condition to being granted the status of an intended user, any intended user who has not entered into a written agreement with CBRE in connection with its use of our report agrees to be bound by the terms and conditions of the agreement between CBRE and the client who ordered the report. No other use or user of the report is permitted by any other party for any other purpose. Dissemination of this report by any party to any non-intended users does not extend reliance to any such party, and CBRE will not be responsible for any unauthorized use of or reliance upon the report, its conclusions or contents (or any portion thereof).

© 2024 CBRE, Inc.

It has been a pleasure to assist you in this assignment. If you have any questions concerning the analysis, or if CBRE can be of further service, please contact us.

Respectfully submitted,

CBRE - VALUATION & ADVISORY SERVICES



Ian R. Valenzuela, MAI
Vice President
New Mexico Certified General Real Estate
Appraiser No. 01734G
Phone: +1 505 837 4931
Fax: +1 505 837 4990
Email: ian.valenzuela@cbre.com

© 2024 CBRE, Inc.

Certification

We certify to the best of our knowledge and belief:

1. The statements of fact contained in this report are true and correct.
2. The reported analyses, opinions, and conclusions are limited only by the reported assumptions and limiting conditions and are our personal, impartial and unbiased professional analyses, opinions, and conclusions.
3. We have no present or prospective interest in or bias with respect to the property that is the subject of this report and have no personal interest in or bias with respect to the parties involved with this assignment.
4. Our engagement in this assignment was not contingent upon developing or reporting predetermined results.
5. Our compensation for completing this assignment is not contingent upon the development or reporting of a predetermined value or direction in value that favors the cause of the client, the amount of the value opinion, the attainment of a stipulated result, or the occurrence of a subsequent event directly related to the intended use of this appraisal.
6. This appraisal assignment was not based upon a requested minimum valuation, a specific valuation, or the approval of a loan.
7. Our analyses, opinions, and conclusions were developed, and this report has been prepared, in conformity with the Uniform Standards of Professional Appraisal Practice, as well as the requirements of the State of New Mexico.
8. The reported analyses, opinions, and conclusions were developed, and this report has been prepared, in conformity with the requirements of the Code of Professional Ethics and Standards of Professional Appraisal Practice of the Appraisal Institute.
9. The use of this report is subject to the requirements of the Appraisal Institute relating to review by its duly authorized representatives.
10. As of the date of this report, Ian R. Valenzuela, MAI has completed the continuing education program for Designated Members of the Appraisal Institute.
11. Ian R. Valenzuela, MAI has made a personal inspection of the property that is the subject of this report.
12. Ian R. Valenzuela, MAI was assisted by Jack Rancier, a licensed trainee, who compiled market research and interviews with market participants, input selected subject and statistical data into the report, and participated in selecting market data for comparison.
13. Valuation & Advisory Services operates as an independent economic entity within CBRE, Inc. Although employees of other CBRE, Inc. divisions may be contacted as a part of our routine market research investigations, absolute client confidentiality and privacy were maintained at all times with regard to this assignment without conflict of interest.
14. Ian Valenzuela, MAI has not provided any services, as an appraiser or in any other capacity, regarding the property that is the subject of this report within the three-year period immediately preceding acceptance of this assignment.



Ian R. Valenzuela, MAI
New Mexico Certified General Real Estate
Appraiser No. 01734G

© 2024 CBRE, Inc.

Subject Photographs



Aerial View

© 2024 CBRE, Inc.



Driscoll Ext



Driscoll Ext



Driscoll Ext



Driscoll Multi-Purpose



Driscoll Entrance

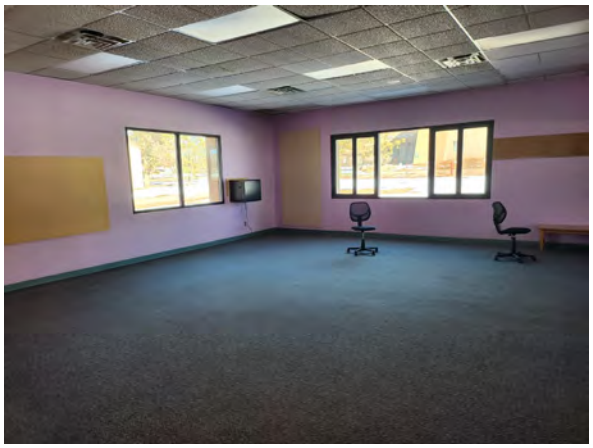

Driscoll Office

© 2024 CBRE, Inc.



Driscoll Locker

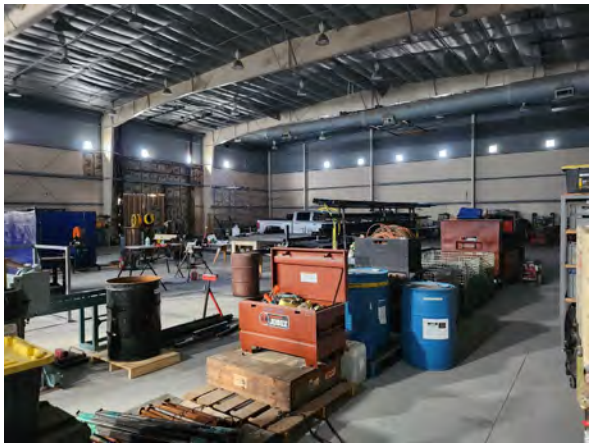

Driscoll Industrial



Driscoll Industrial



Garson Ext



Garson Ext

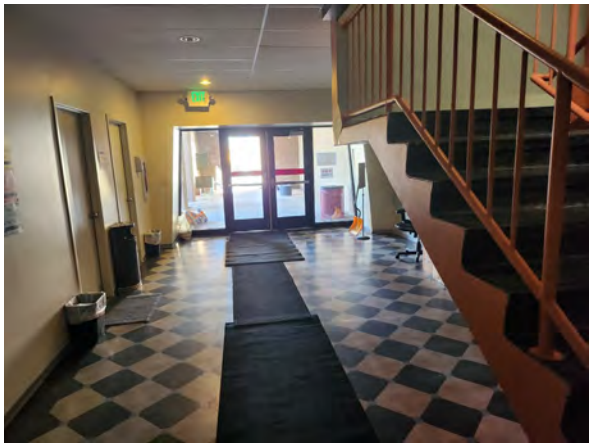

Garson Entry

© 2024 CBRE, Inc.



Garson Office



Garson Theater



Garson Screen



Garson Studio



Garson Studio



Garson Studio

© 2024 CBRE, Inc.



Garson Office

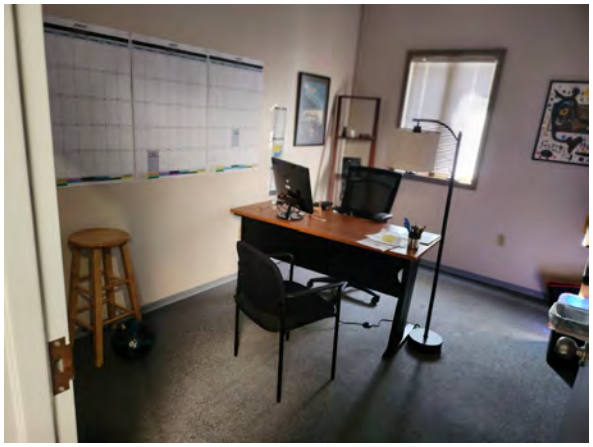

Garson Office



Garson Production

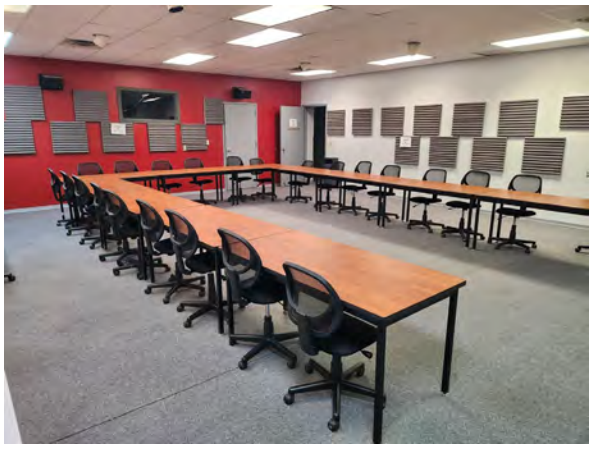

Garson Classroom



Benildus Ext



Benildus Ext

© 2024 CBRE, Inc.



Benildus Hall



Benildus Office



Benildus Recording



Benildus Office

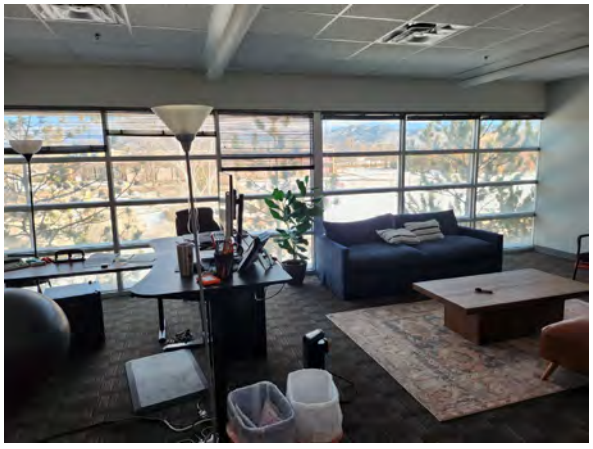

Benildus Office



Benildus Office

© 2024 CBRE, Inc.



St. Michael's Drive



Subject Entrance



Campus Land



Campus Entrance

© 2024 CBRE, Inc.

Executive Summary

Property Name	Santa Fe College of Arts (portion of)	
Location	1600 St Michaels Dr Santa Fe, Santa Fe County, NM 87505	
Parcel Number(s)	1052097137176000000	
Client	Midtown Santa Fe Productions QOF, LLC	
Highest and Best Use		
As If Vacant	Mixed Use, Office, Film	
As Improved	Mixed Use, Office, Film	
Property Rights Appraised	Fee Simple Estate	
Date of Inspection	January 16, 2024	
Estimated Exposure Time	12 - 24 Months	
Estimated Marketing Time	12 - 24 Months	
Primary Land Area	11.83 AC	515,228 SF
Zoning	Midtown LINC Overlay District	
Improvements		**Comments**
Property Type	Office	(Single Tenant)
Number of Buildings	3	
Number of Stories	2	
Gross Building Area	98,677 SF	
Net Rentable Area	98,677 SF	
Year Built	1968	
Effective Age	25 Years	
Remaining Economic Life	25 Years	
Condition	Average	
Buyer Profile	Investor-Local	
Financial Indicators		
Current Occupancy	0.0%	
Stabilized Occupancy	85.0%	
Overall Capitalization Rate	9.00%	

© 2024 CBRE, Inc.

Pro Forma	Total	Per SF
Effective Gross Income	$1,711,553	$17.35
Operating Expenses	$710,297	$7.20
Expense Ratio	41.50%	
Net Operating Income	$1,001,256	$10.15

VALUATION		Total	Per SF
Market Value As Is On	**November 15, 2023**		
Sales Comparison Approach		$4,800,000	$48.64
Income Approach		$3,900,000	$39.52

CONCLUDED MARKET VALUE

Appraisal Premise	Interest Appraised	Date of Value	Value
As Is	Fee Simple Estate	November 15, 2023	$4,800,000

Compiled by CBRE

DATE OF REPORT

The report was initially dated February 12, 2024. We were provided with a detailed site layout indicating the parcels and acreage subsequently, and have incorporated that exhibit into the report. The revised date of the report is February 23, 2024.

STRENGTHS, WEAKNESSES, OPPORTUNITIES AND THREATS (SWOT)

Strengths/ Opportunities

- The subject is located in Santa Fe, which is a tourist destination, and the seat of New Mexico State Government.
- The City has committed to redeveloping the immediate area

Weaknesses/ Threats

- Exposure & visibility to the subject are somewhat limited due to the configuration of the improvements on the site
- There is a limited buyer pool for a mixed use facility of this nature
- The valuation analysis indicates that use as an income property is not feasible in the current market.
- Commercial real estate market conditions have deteriorated at the macro level. The significant recent increase in the cost of capital and reduced volume of transaction activity is impacting price discovery and creating an increase in uncertainty. Increasing interest rates and subdued economic growth will continue to weigh on commercial real estate fundamentals and investment transaction volumes. This creates a higher degree of uncertainty in general, though the impacts may vary by market and asset class/type.

MARKET VOLATILITY

We draw your attention to a combination of inflationary pressures (leading to higher interest rates) and recent failures/stress in banking systems which have significantly increased the

© 2024 CBRE, Inc.

potential for constrained credit markets, negative capital value movements and enhanced volatility in property markets over the short-to-medium term.

Experience has shown that consumer and investor behavior can quickly change during periods of such heightened volatility. Lending or investment decisions should reflect this heightened level of volatility and the potential for deteriorating market conditions.

It is important to note that the conclusions set out in this report are valid as at the valuation date only. Where appropriate, we recommend that the valuation is closely monitored, as we continue to track how markets respond to evolving events.

CURRENT ECONOMIC CONDITIONS

At its January 2024 meeting, the Federal Reserve held the federal funds rate at a range of 5.25% to 5.50% and indicated it will continue reducing its balance sheet by $95 billion per month. The Fed removed language from its policy statement about further tightening but stated it needs more confidence inflation "is moving sustainably toward 2.00%" before considering cuts. Rising real interest rates will be a headwind for the economy in coming quarters; however, CBRE expects the U.S. economy will remain resilient with growth averaging 1.6% for the year.

While opinions vary on future economic issues, the general market consensus at the time of this appraisal is the anticipation of moderating inflation as higher interest rates cool demand. Tighter lending conditions and a weakening economy will keep capital markets activity subdued and reduce leasing demand in the short to medium term. Amid this uncertain and dynamic environment, investment market performance will be uneven across property types.

EXTRAORDINARY ASSUMPTIONS

An extraordinary assumption is defined as "an assignment-specific assumption as of the effective date regarding uncertain information used in an analysis which, if found to be false, could alter the appraiser's opinions or conclusions." [1]

- The value includes an estimate of deferred maintenance provided by an engineering firm in January, 2023. We assume the condition of the property remains similar to that time and that the estimate of the budgeted repairs still remains reasonable.
- The use of these extraordinary assumptions may have affected the assignment results.

HYPOTHETICAL CONDITIONS

A hypothetical condition is defined as "a condition, directly related to a specific assignment, which is contrary to what is known by the appraiser to exist on the effective date of the assignment results, but is used for the purposes of analysis." [2]

---

[1] The Appraisal Foundation, *USPAP, 2024 Edition (Effective January 1, 2024)*

[2] The Appraisal Foundation, *USPAP, 2024 Edition (Effective January 1, 2024)*

© 2024 CBRE, Inc.

- None noted

OWNERSHIP AND PROPERTY HISTORY

OWNERSHIP SUMMARY	
Item	Current
Current Ownership	
Owner:	City of Santa Fe
Seller:	College of Christian Brothers
Purchase Price:	$19,500,000
Transaction Date:	September 15, 2009
Sale in Last 3 Years?:	No
Legal Reference:	1577356
County/Locality Name:	Santa Fe
Buyer/Seller Relationship Type:	Arm's length and reasonable
At / Above / Below Market:	At Market
Comments:	Sale of the entire campus
Pending Sale	
Under Contract:	Yes
Buyer:	PE Real Estate
Contract Price:	$6,500,000
Contract Date:	May 1, 2023
Arm's Length:	Yes
At / Above / Below Market:	At Market
Comments:	Public auction, included buildings and land which are not part of this analysis
Current Listing	
Currently Listed For Sale:	No
Compiled by CBRE	

EXPOSURE/MARKETING TIME

Current appraisal guidelines require an estimate of a reasonable time period in which the subject could be brought to market and sold. This reasonable time frame can either be examined historically or prospectively. In a historical analysis, this is referred to as exposure time. Exposure time always precedes the date of value, with the underlying premise being the time a property would have been on the market prior to the date of value, such that it would sell at its appraised value as of the date of value. On a prospective basis, the term marketing time is most often used. The exposure/marketing time is a function of price, time, and use. It is not an isolated estimate of time alone. In consideration of these factors, we have analyzed the following:

- exposure periods for comparable sales used in this appraisal;
- exposure/marketing time information from the CBRE, Inc. National Investor Survey and the PwC Real Estate Investor Survey; and
- the opinions of market participants.

The following table presents the information derived from these sources.

© 2024 CBRE, Inc.

EXPOSURE/MARKETING TIME DATA

Investment Type	Exposure/Mktg. (Months) Range	Average
Comparable Sales Data	4.0 - 11.0	7.0
PwC Suburban Office National Data	1.0 - 15.0	7.0
Local Market Professionals	12.0 - 24.0	18.0
CBRE Exposure Time Estimate	**12 - 24 Months**	
CBRE Marketing Period Estimate	**12 - 24 Months**	

Various Sources Compiled by CBRE

© 2024 CBRE, Inc.

Table of Contents

Certification i
Subject Photographs ii
Executive Summary ix
Table of Contents xiv
Scope of Work 1
Area Analysis 6
Neighborhood Analysis 8
Site Analysis 15
Improvements Analysis 25
Zoning 33
Tax and Assessment Data 35
Market Analysis 36
Highest and Best Use 48
Sales Comparison Approach 50
Income Capitalization Approach 56
Reconciliation of Value 66
Assumptions and Limiting Conditions 67

ADDENDA

A Improved Sale Data Sheets
B Rent Comparable Data Sheets
C Operating Data
D Legal Description
E Client Contract Information
F Qualifications

© 2024 CBRE, Inc.

Scope of Work

This Appraisal Report is intended to comply with the real property appraisal development and reporting requirements set forth under Standards Rule 1 and 2 of USPAP. The scope of the assignment relates to the extent and manner in which research is conducted, data is gathered, and analysis is applied.

INTENDED USE OF REPORT

This appraisal is to be used for buy/sell/exchange and no other use is permitted.

CLIENT

The client is Midtown Santa Fe Productions QOF, LLC.

INTENDED USER OF REPORT

This appraisal is to be used by Midtown Santa Fe Productions QOF, LLC. No other user(s) may rely on our report unless as specifically indicated in this report.

> Intended users are those who an appraiser intends will use the appraisal or review report. In other words, appraisers acknowledge at the outset of the assignment that they are developing their expert opinions for the use of the intended users they identify. Although the client provides information about the parties who may be intended users, ultimately it is the appraiser who decides who they are. This is an important point to be clear about: The client does not tell the appraiser who the intended users will be. Rather, the client tells the appraiser who the client needs the report to be speaking to, and given that information, the appraiser identifies the intended user or users. It is important to identify intended users because an appraiser's primary responsibility regarding the use of the report's opinions and conclusions is to those users. Intended users are those parties to whom an appraiser is responsible for communicating the findings in a clear and understandable manner. They are the audience. [3]

RELIANCE LANGUAGE

Reliance on any reports produced by CBRE under this Agreement is extended solely to parties and entities expressly acknowledged in a signed writing by CBRE as Intended Users of the respective reports, provided that any conditions to such acknowledgement required by CBRE or hereunder have been satisfied. Parties or entities other than Intended Users who obtain a copy of the report or any portion thereof (including Client if it is not named as an Intended User), whether as a result of its direct dissemination or by any other means, may not rely upon any opinions or conclusions contained in the report or such portions thereof, and CBRE will not be responsible for

[3] Appraisal Institute, The Appraisal of Real Estate, 15th ed. (Chicago: Appraisal Institute, 2020), 40.

© 2024 CBRE, Inc.

any unpermitted use of the report, its conclusions or contents or have any liability in connection therewith.

PURPOSE OF THE APPRAISAL

The purpose of this appraisal is to develop an opinion of the market value of the subject property.

DEFINITION OF VALUE

The current economic definition of market value agreed upon by agencies that regulate federal financial institutions in the U.S. (and used herein) is as follows:

The most probable price which a property should bring in a competitive and open market under all conditions requisite to a fair sale, the buyer and seller each acting prudently and knowledgeably, and assuming the price is not affected by undue stimulus. Implicit in this definition is the consummation of a sale as of a specified date and the passing of title from seller to buyer under conditions whereby:

1. buyer and seller are typically motivated;
2. both parties are well informed or well advised, and acting in what they consider their own best interests;
3. a reasonable time is allowed for exposure in the open market;
4. payment is made in terms of cash in U.S. dollars or in terms of financial arrangements comparable thereto; and
5. the price represents the normal consideration for the property sold unaffected by special or creative financing or sales concessions granted by anyone associated with the sale. [4]

INTEREST APPRAISED

The value estimated represents the Fee Simple Estate as defined below:

> *Fee Simple Estate* - Absolute ownership unencumbered by any other interest or estate, subject only to the limitations imposed by the governmental powers of taxation, eminent domain, police power and escheat. [5]
>
> *Leased Fee Interest* - The ownership interest held by the lessor, which includes the right to receive the contract rent specified in the lease plus the reversionary right when the lease expires. [6]
>
> *Leasehold Estate* - The right held by the lessee to use and occupy real estate for a stated term and under the conditions specified in the lease. [7]
>
> *Going Concern* – An established and operating business having an indefinite future life. [8]

---

[4] 12 CFR, Part 34, Subpart C-Appraisals, 34.42(h).

[5] Appraisal Institute, The Dictionary of Real Estate Appraisal, 7th ed. (Chicago: Appraisal Institute, 2022), 73.

[6] Appraisal Institute, The Dictionary of Real Estate Appraisal, 7th ed. (Chicago: Appraisal Institute, 2022), 105.

[7] Appraisal Institute, The Dictionary of Real Estate Appraisal, 7th ed. (Chicago: Appraisal Institute, 2022), 105.

© 2024 CBRE, Inc.

Extent to Which the Property is Identified

The property is identified through the following sources:

postal address
assessor's records
legal description

Extent to Which the Property is Inspected

Ian Valenzuela inspected the interior and exterior of the subject, as well as its surrounding environs on the effective date of appraisal. This inspection was considered adequate and is the basis for our findings.

Type and Extent of the Data Researched

CBRE reviewed the following:

applicable tax data
zoning requirements
flood zone status
demographics
income and expense data
comparable data

Type and Extent of Analysis Applied

CBRE, Inc. analyzed the data gathered through the use of appropriate and accepted appraisal methodology to arrive at a probable value indication via each applicable approach to value. The steps required to complete each approach are discussed in the methodology section.

STATEMENT OF COMPETENCY

The appraisers have the appropriate knowledge, education and experience to complete this assignment competently.

[8] Appraisal Institute, The Dictionary of Real Estate Appraisal, 7th ed. (Chicago: Appraisal Institute, 2022), 83.

© 2024 CBRE, Inc.

Data Resources Utilized in the Analysis

DATA SOURCES	
Item:	*Source(s):*
Site Data	
Size	Santa Fe County Assessor / Aerial Estimates
Improved Data	
Building Area	Site Plan
Area Breakdown/Use	Inspection
No. Bldgs.	Inspection
Year Built/Developed	Santa Fe County Assessor
Economic Data	
Deferred Maintenance:	Wilson and Co. Engineers
Building Costs:	Unknown
Income Data:	Unknown
Expense Data:	Unknown
Compiled by CBRE	

APPRAISAL METHODOLOGY

In appraisal practice, an approach to value is included or omitted based on its applicability to the property type being valued and the quality and quantity of information available.

Cost Approach

The cost approach is based on the proposition that the informed purchaser would pay no more for the subject than the cost to produce a substitute property with equivalent utility. This approach is particularly applicable when the property being appraised involves relatively new improvements that represent the highest and best use of the land, or when it is improved with relatively unique or specialized improvements for which there exist few sales or leases of comparable properties.

Sales Comparison Approach

The sales comparison approach utilizes sales of comparable properties, adjusted for differences, to indicate a value for the subject. Valuation is typically accomplished using physical units of comparison such as price per square foot, price per unit, price per floor, etc., or economic units of comparison such as gross rent multiplier. Adjustments are applied to the physical units of comparison derived from the comparable sale. The unit of comparison chosen for the subject is then used to yield a total value.

Income Capitalization Approach

The income capitalization approach reflects the subject's income-producing capabilities. This approach is based on the assumption that value is created by the expectation of benefits to be derived in the future. Specifically estimated is the amount an investor would be willing to pay to receive an income stream plus reversion value from a property over a period of time. The two common valuation techniques associated with the income capitalization approach are direct capitalization and the discounted cash flow (DCF) analysis.

© 2024 CBRE, Inc.

Methodology Applicable to the Subject

In valuing the subject, only the sales comparison and income capitalization approaches are applicable and have been used. The cost approach is not applicable in the estimation of market value, as market participants tend not to rely on this approach for market decisions. The exclusion of said approach(s) is not considered to compromise the credibility of the results rendered herein.

© 2024 CBRE, Inc.

Area Analysis

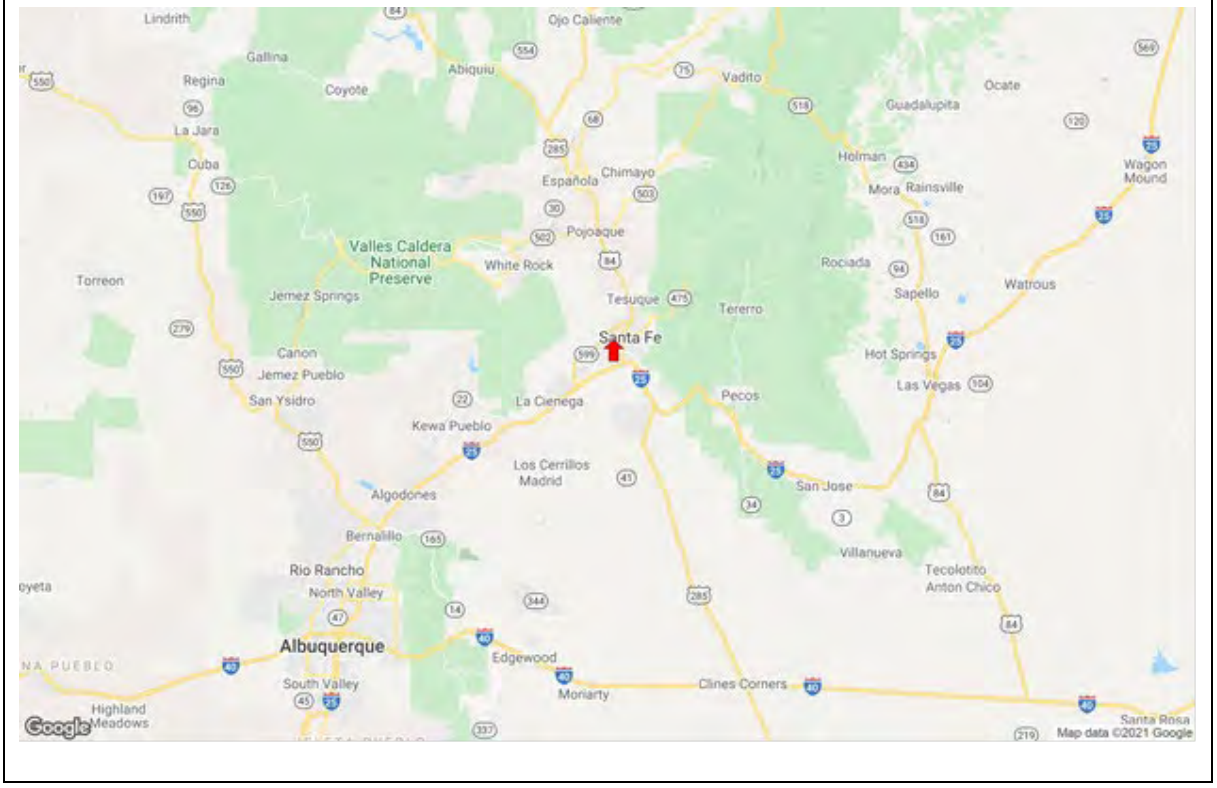

The subject is located in the Santa Fe, NM Metropolitan Statistical Area. Key information about the area is provided in the following tables.

POPULATION

The area has a population of 157,756 and a median age of 46, with the largest population group in the 60-69 age range and the smallest population in 80+ age range.

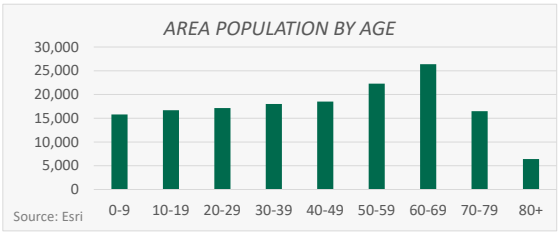

Population has increased by 13,586 since 2010, reflecting an annual increase of 0.7%. Population is projected to increase by 3,068 between 2023 and 2028, reflecting a 0.4% annual population growth.

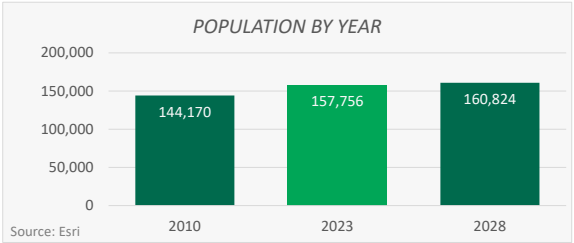

Source: ESRI, downloaded on Jan, 31 2024

© 2024 CBRE, Inc.

INCOME

The area features an average household income of $108,696 and a median household income of $69,930. Over the next five years, median household income is expected to increase by 17.0%, or $2,381 per annum.

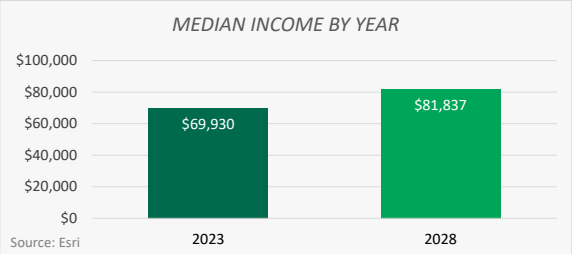

EDUCATION

A total of 44.3% of individuals over the age of 24 have a college degree, with 20.9% holding a bachelor's degree and 23.4% holding a graduate degree.

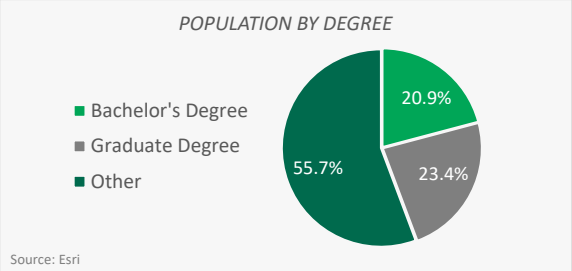

EMPLOYMENT

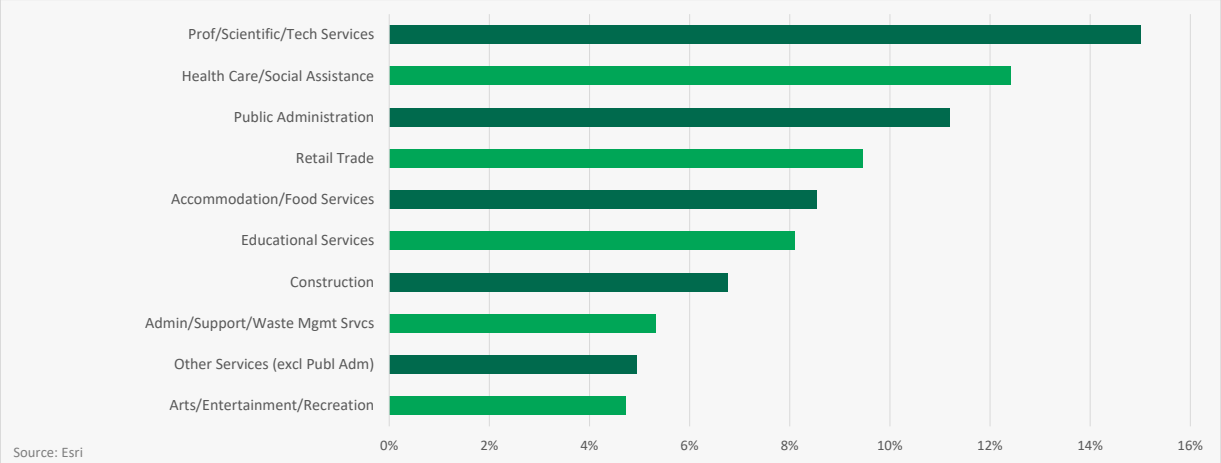

The area includes a total of 72,108 employees. The top three industries within the area are Prof/Scientific/Tech Services, Health Care/Social Assistance and Public Administration, which represent a combined total of 39% of the workforce.

Source: ESRI, downloaded on Jan 31, 2024; BLS.gov dated Jan 0, 1900

In summary, the area is forecasted to experience an increase in population and an increase in household income.

© 2024 CBRE, Inc.

Neighborhood Analysis

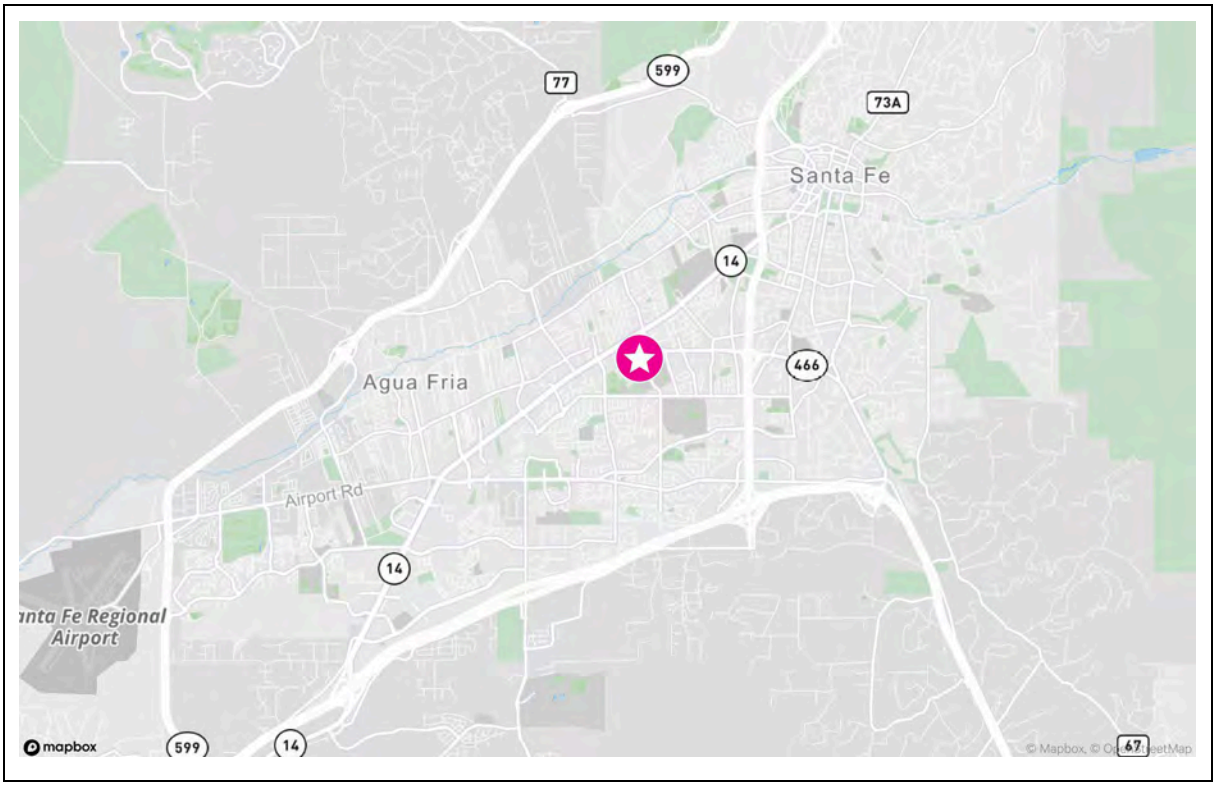

LOCATION

The subject is located in the city of Santa Fe and is considered a suburban location. The city of Santa Fe is situated in central Santa Fe County. The subject property is approximately three miles southwest of Downtown Santa Fe.

BOUNDARIES

The neighborhood boundaries are detailed as follows:

North:	Paseo de Peralta
South:	I-25
East:	Santa Fe Foothills
West:	Cerrillos Road

LAND USE

Land uses immediately surrounding the subject property are primarily retail along the Cerrillos Road corridor with some multi-family development and vacant commercial land in the interior. The Saint Francis Corridor has a concentration of office use, including New Mexico state offices and Santa Fe County and Municipal offices, while Cerrillos Road is the main business arterial for the city.

© 2024 CBRE, Inc.

GROWTH PATTERNS

The neighborhood is in the growth stage of the neighborhood life-cycle. Commercial development has occurred along primary commercial thoroughfares such as Airport Road and Cerrillos Road. The major retail development in the area is located at the edge of the neighborhood on the east side of Cerrillos Road. This area includes a regional mall, Santa Fe Place and a Power Center containing a Best Buy, Target, Albertson's and other retailers.

Recent commercial development has been ongoing within the neighborhood. A new Super-Walmart was completed in mid-2011 on Cerrillos Road just north of Interstate Highway 25. This has drawn new development to the surrounding area and several small commercial developments have already been built on pad sites around Walmart, as well as a new auto dealership just north for Honda and Subaru.

The Railyard

The most recent development in the area is focused on The Railyard, a master planned area north of the intersection of St. Francis Drive and Cerrillos Road. The Railyard Master Plan, adopted in 2002, designated the area for redevelopment of road and utilities infrastructure to support a large park and complementary urban neighborhood improvements, including retail for both local and tourist service, office, gallery, and residential use near the downtown plaza.

ACCESS

Access to and from the subject's neighborhood is considered good by way of state highways that connect with I-25. Major highways serving Santa Fe include I- 25, U.S. Highways 84 (St. Francis Drive), 85, 285 and 64; and State Routes 14 (Cerrillos Road) and 599 (Veterans Memorial Highway). The City of Albuquerque is situated 60 miles to the southwest of Santa Fe along I-25, which is the only north/south interstate highway in the State. The primary north/south roads in the subject neighborhood are US Highway 84, locally named St. Francis Drive, and SR-14, or Cerrillos Road, which is known to some in the area as Turquoise Trail. The subject property is located at the intersection of Cerrillos Road and St. Michel's Drive, ½ mile east of St. Francis Drive. Interstate 25 is accessed 2 miles southeast of the subject via St. Francis Drive, or four miles southwest of the subject via Cerrillos Road.

The Santa Fe Municipal Airport, founded in 1941, is situated on approximately 2,110 acres of land on the southwest side of Santa Fe, New Mexico, 9 miles southwest of Downtown Santa Fe. The airport is classified by the Federal Aviation Administration (FAA) as a non-hub, Part 139, class 3 airport. This classification means that the airport cannot handle commercial airline aircraft with more than 30 passenger seats. American Airlines is currently operating daily flights out of Santa Fe to and from Dallas-Fort Worth (DFW) and Phoenix (PHX) while United Airlines is operating daily flights to and from Denver (DIA). The airport is served by three active runways.

© 2024 CBRE, Inc.

DEMOGRAPHICS

Selected neighborhood demographics in 1-, 3- and 5-mile radius from the subject are shown in the following table:

SELECTED NEIGHBORHOOD DEMOGRAPHICS

1600 St Michaels Dr Santa Fe, NM 87505	1 Mile Radius	3 Mile Radius	5 Mile Radius	Santa Fe, NM Metropolitan Statistical Area
Population				
2028 Total Population	10,856	60,637	101,005	160,824
2023 Total Population	11,007	59,922	97,334	157,756
2010 Total Population	11,167	54,458	86,225	144,170
2000 Total Population	12,071	53,222	79,008	129,292
Annual Growth 2023 - 2028	*-0.28%*	*0.24%*	*0.74%*	*0.39%*
Annual Growth 2010 - 2023	*-0.11%*	*0.74%*	*0.94%*	*0.70%*
Annual Growth 2000 - 2010	*-0.78%*	*0.23%*	*0.88%*	*1.10%*
Households				
2028 Total Households	5,204	29,721	46,901	72,529
2023 Total Households	5,171	28,855	44,634	70,027
2010 Total Households	4,780	25,332	38,431	61,963
2000 Total Households	4,650	22,780	33,378	52,482
Annual Growth 2023 - 2028	*0.13%*	*0.59%*	*1.00%*	*0.70%*
Annual Growth 2010 - 2023	*0.61%*	*1.01%*	*1.16%*	*0.95%*
Annual Growth 2000 - 2010	*0.28%*	*1.07%*	*1.42%*	*1.67%*
Income				
2023 Median Household Income	$54,486	$64,691	$69,247	$69,930
2023 Average Household Income	$76,730	$95,392	$106,913	$108,696
2023 Per Capita Income	$35,820	$46,128	$48,864	$48,290
2023 Pop 25+ College Graduates	2,766	21,194	33,708	51,920
Age 25+ Percent College Graduates - 2023	35.3%	46.8%	46.8%	44.3%

Source: ESRI

CONCLUSION

Santa Fe continues to grow south and west and the city center is shifting south and west as well. The old city center was downtown Santa Fe near Cerrillos Road and St. Francis Drive, and continues to function as a locus of government office use. However, this central core is mostly fully built out, and considered essentially stabilized, as evidenced by the slight decrease in projected population and household numbers within a one mile radius of the subject. The subject is well located in an area near Downtown, on a high traffic arterial road in the neighborhood and is anticipated to have good acceptance in the market.

© 2024 CBRE, Inc.

ORIGINAL RFP OUTLINE, JUNE 2023



© 2024 CBRE, Inc.

SKETCH MAP OF CURRENT PROPOSED ACQUISITION



© 2024 CBRE, Inc.

PARCEL MAP (CURRENT ACQUISITION IN RED)

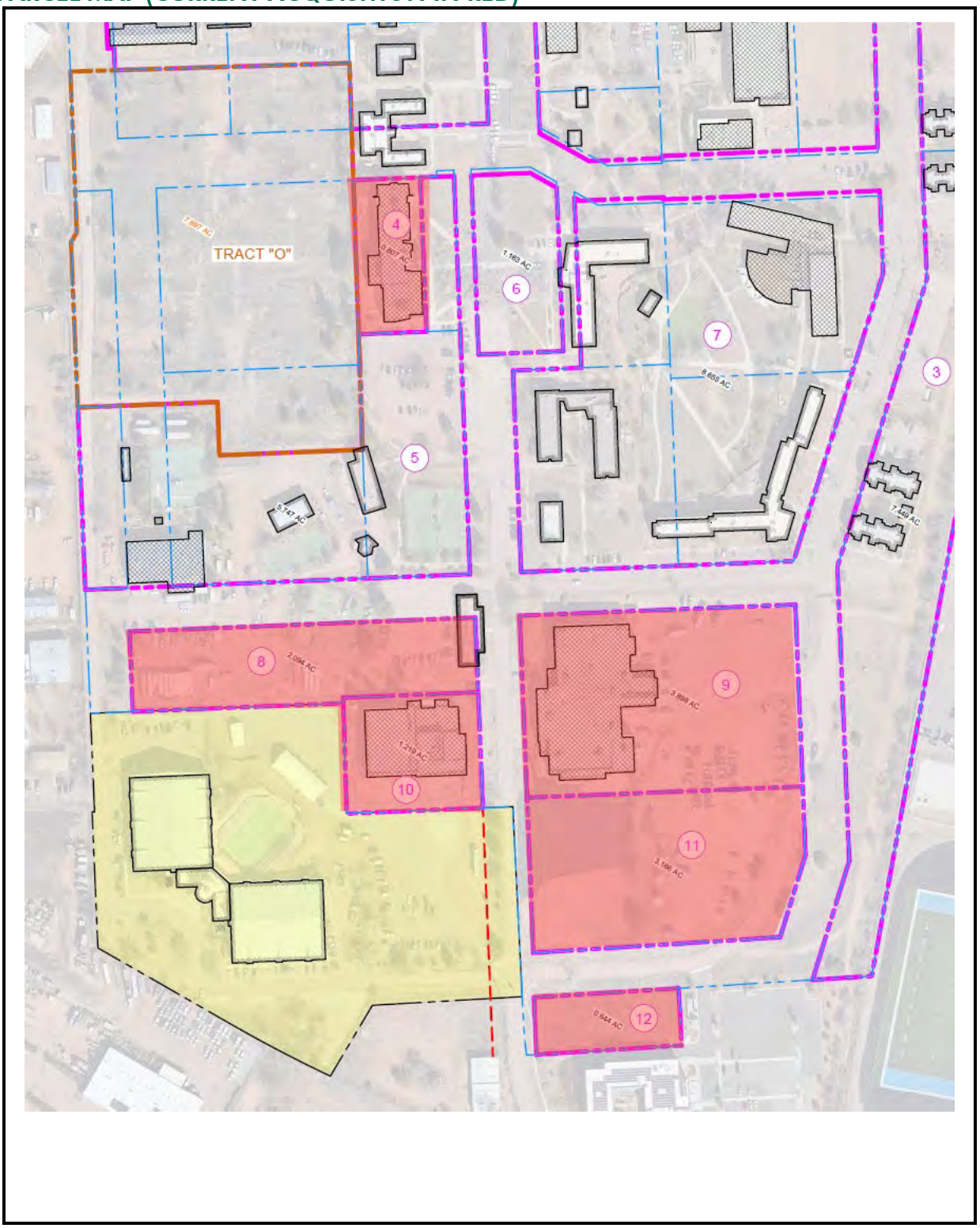

© 2024 CBRE, Inc.

FLOOD PLAIN MAP

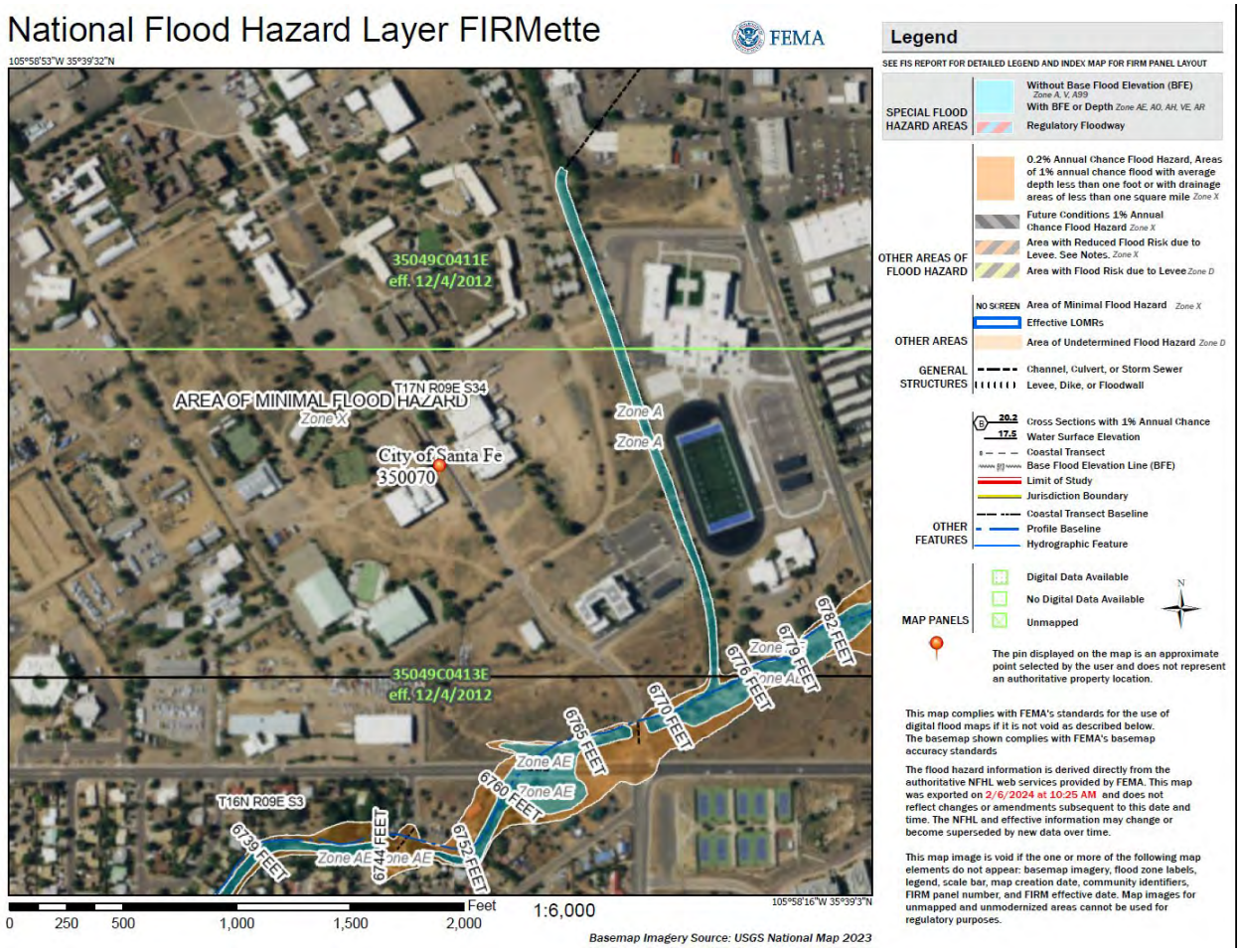

© 2024 CBRE, Inc.

Site Analysis

The following chart summarizes the salient characteristics of the subject site.

SITE SUMMARY AND ANALYSIS

Physical Description		
Gross Site Area	64.22 Acres	2,797,423 Sq. Ft.
Net Site Area	11.83 Acres	515,228 Sq. Ft.
Excess Land Area	None	n/a
Surplus Land Area	None	n/a
Shape	Irregular	
Topography	Level, At Street Grade	
Zoning District	Midtown LINC Overlay District	
Flood Map Panel No. & Date	n/a	n/a
Flood Zone	Zone X (Unshaded)	
Adjacent Land Uses	Commercial, Education, Retail	
Earthquake Zone	n/a	

Comparative Analysis	**Rating**
Visibility	Average
Functional Utility	Adequate
Traffic Volume	Average
Adequacy of Utilities	Adequate
Landscaping	Average
Drainage	Adequate

Utilities	**Availability**	**Comments**
Water	Yes	
Sewer	Yes	
Natural Gas	Yes	
Electricity	Yes	
Telephone	Yes	
Mass Transit	Yes	

Other	**Yes**	**No**	**Unknown**
Detrimental Easements			x
Encroachments			x
Deed Restrictions			x
Reciprocal Parking Rights			x

Various sources compiled by CBRE

SITE SIZE

The entire campus measures 64.22 acres. The initial RFP included Alumni Hall and additional land, and was calculated at 17.26 acres. For the site size of the current proposed acquisition, we

© 2024 CBRE, Inc.

have been provided with calculations of portions outlined on the proposed site plan, estimated at 11.83 acres.

INGRESS/EGRESS

Ingress and egress is available to the site via one road along the southwestern right-of-way of St. Michael's Road and one road along the northern right-of-way of Siringo Road. Interior campus roads provide access to each building and site.

St. Michael's Road, at the subject, is a northwest/southeast arterial street that is improved with three marked lanes of traffic in each direction. Street improvements include center of median with turning lanes, asphalt paving and concrete curbs, gutters and sidewalks, and street lighting. Street parking is not permitted.

Siringo Road, at the subject is an east/west business street. It is improved with one marked lane of traffic in each direction. Additional street improvements include center turning lane, concrete curbs, gutters and sidewalks, and street lighting. Street parking is not permitted.

ENVIRONMENTAL ISSUES

An Environmental Site Assessment was provided and has been summarized below:

© 2024 CBRE, Inc.

ENVIRONMENTAL SITE ASSESSMENT SUMMARY	
Performed by:	Western Technologies
Performed for:	City of Santa Fe
Report Type:	Phase II
Report Date:	September 1, 2023
Status:	Final
Findings:	REC included: • Adjacent property chlorinated solvent groundwater contamination. • Vehicle maintenance stains visible, requiring Phase 2 soil samplings. • Existing Aboveground Storage Tanks (AST) in use with no apparent spills/stains. • Former Underground Storage Tanks (UST) removed with no apparent spills/stains. • Backfill with demolition debris, requiring a Phase 2 ESA, which identified Asbestos-Containing Materials (ACM)
Results:	According to Tim Farrell, a Property Development Manager for the City of Santa Fe, these RECs were addressed by Western Technologies who completed a Phase 2 ESA Report where soil samples (borings) and analysis were conducted. The results of those procedures were negative of any environmental impact.
Compiled by CBRE	

The appraiser is not qualified to detect the existence of potentially hazardous material or underground storage tanks which may be present on or near the site. The existence of hazardous materials or underground storage tanks may affect the value of the property. For this appraisal, CBRE, Inc. has specifically assumed that the property is not affected by any hazardous materials that may be present on or near the property.

ADJACENT PROPERTIES

The adjacent land uses are summarized as follows:

North: Retail
South: Residential
East: Retail and Residential
West: Institutional

CONCLUSION

The site is adequately located and afforded adequate access and visibility from roadway frontage. The size of the site is typical for the area and use, and there are no known detrimental uses in the immediate vicinity. The subject has access to a major arterial and a business street which affords excellent visibility and access. Overall, there are no known factors which are

© 2024 CBRE, Inc.

considered to prevent the site from development to its highest and best use, as if vacant, or adverse to the existing use of the site.

© 2024 CBRE, Inc.

GARSON FLOOR PLAN

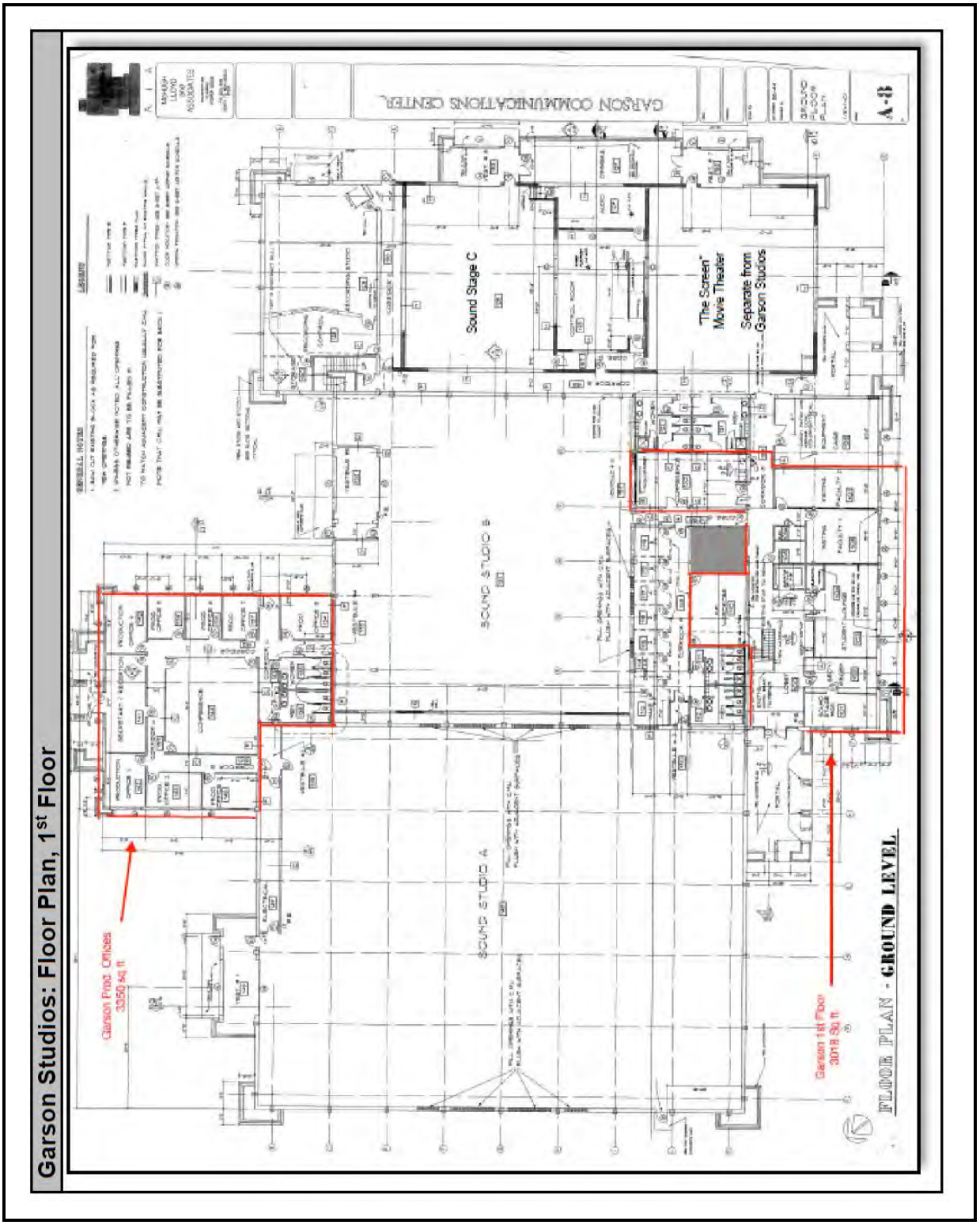

© 2024 CBRE, Inc.

GARSON SECOND FLOOR

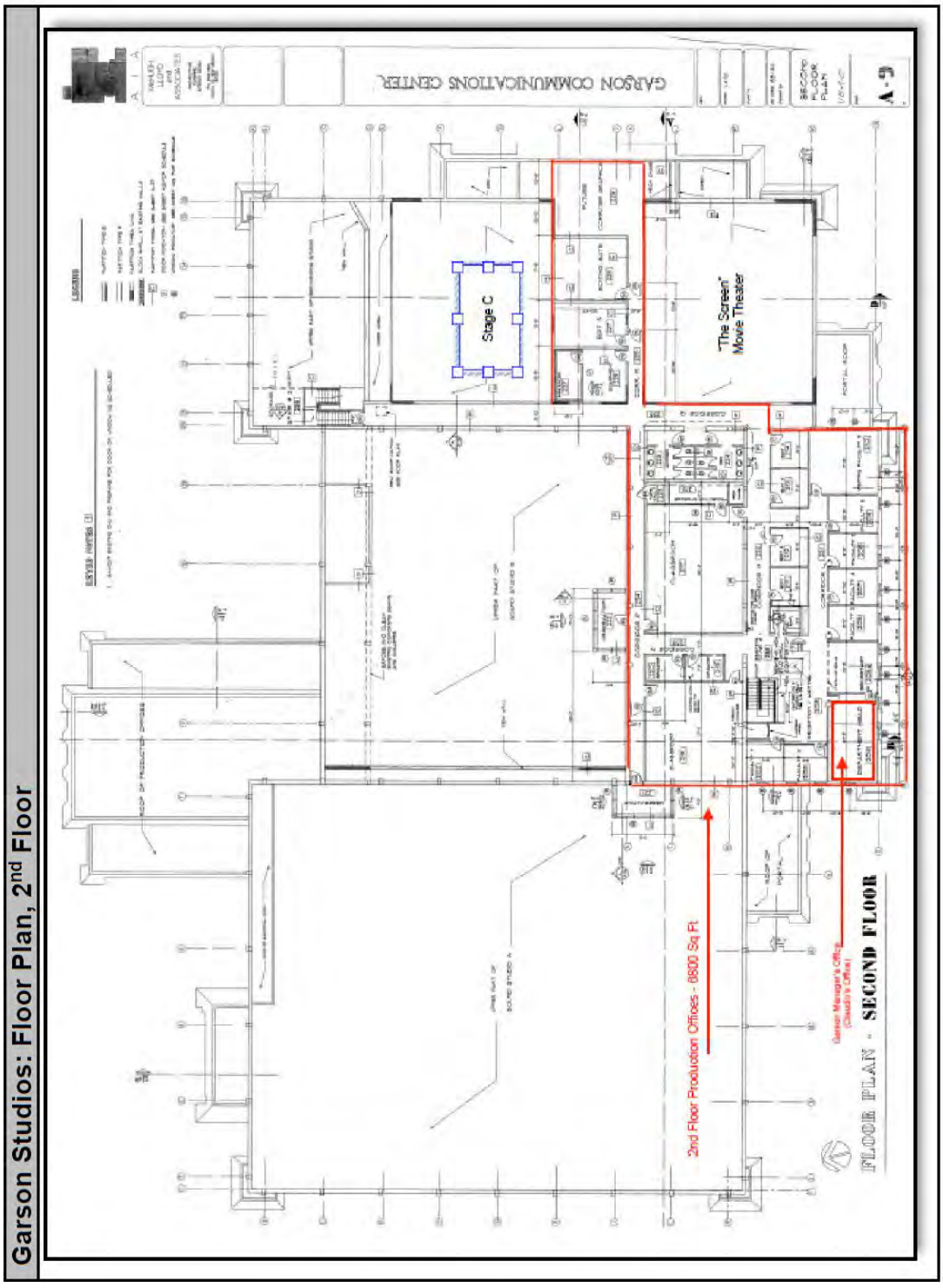

© 2024 CBRE, Inc.

DRISCOLL FLOOR PLAN

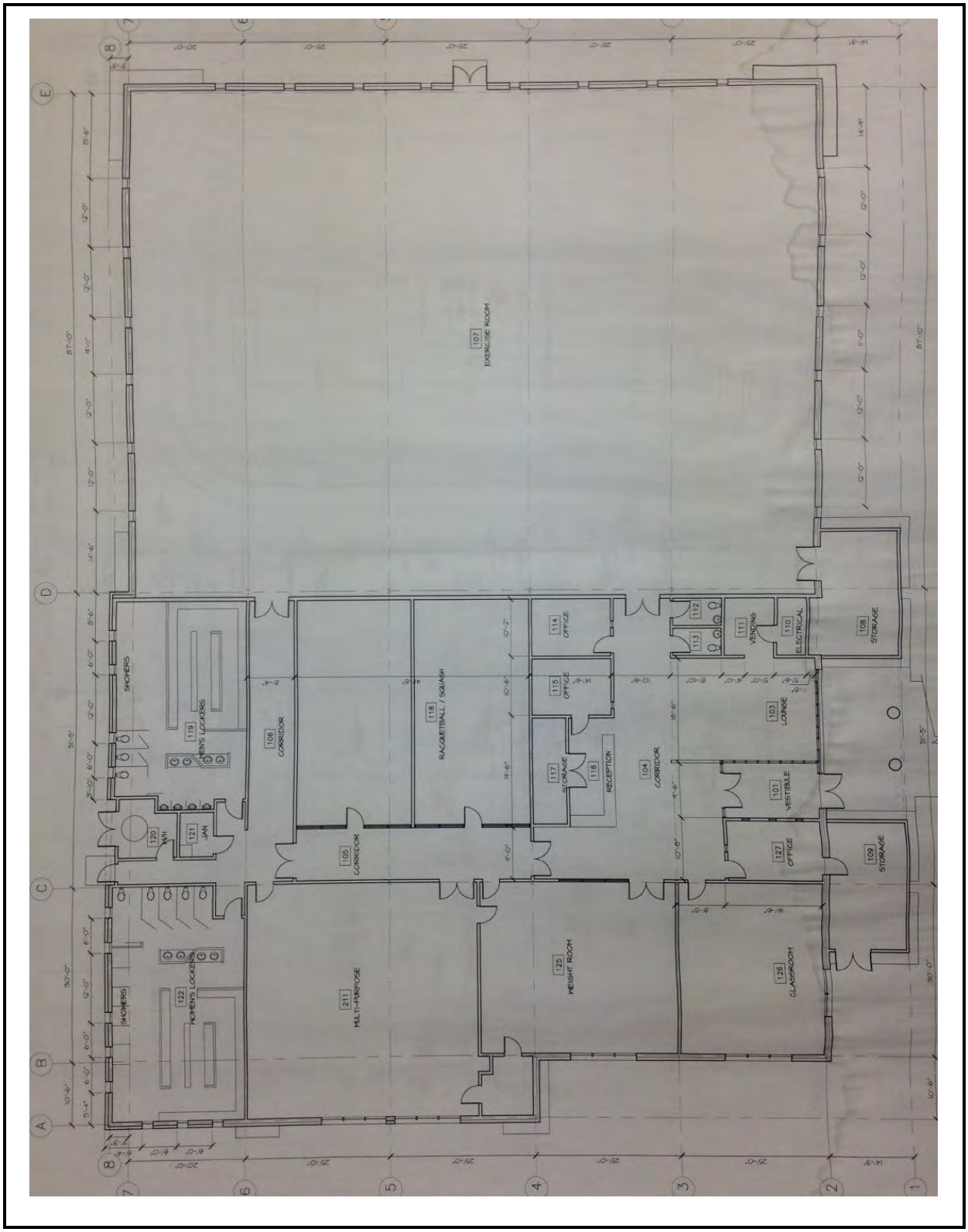

© 2024 CBRE, Inc.

BENILDUS FIRST FLOOR

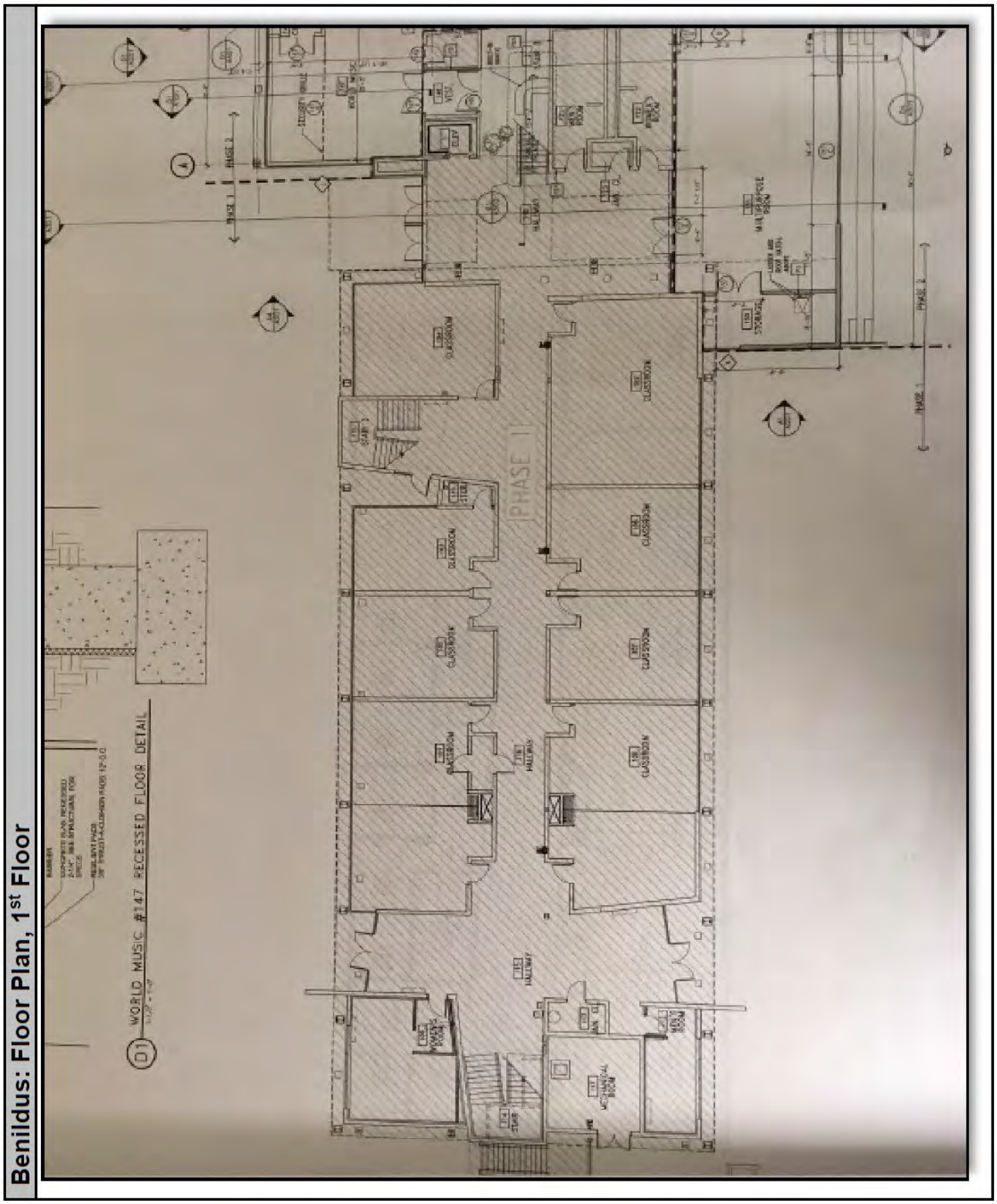

© 2024 CBRE, Inc.

BENILDUS SECOND FLOOR

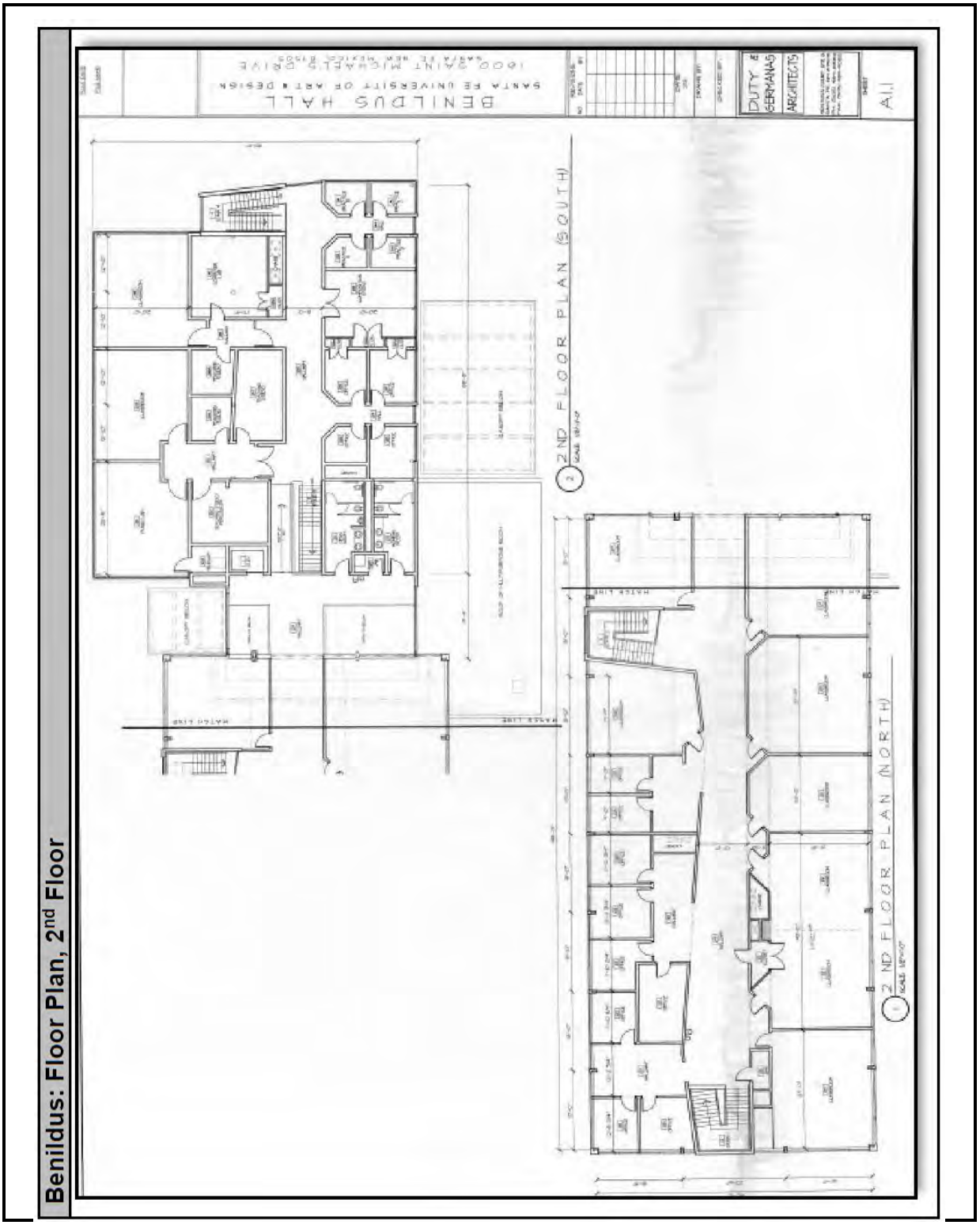

© 2024 CBRE, Inc.

RFP IMPROVEMENTS MAP

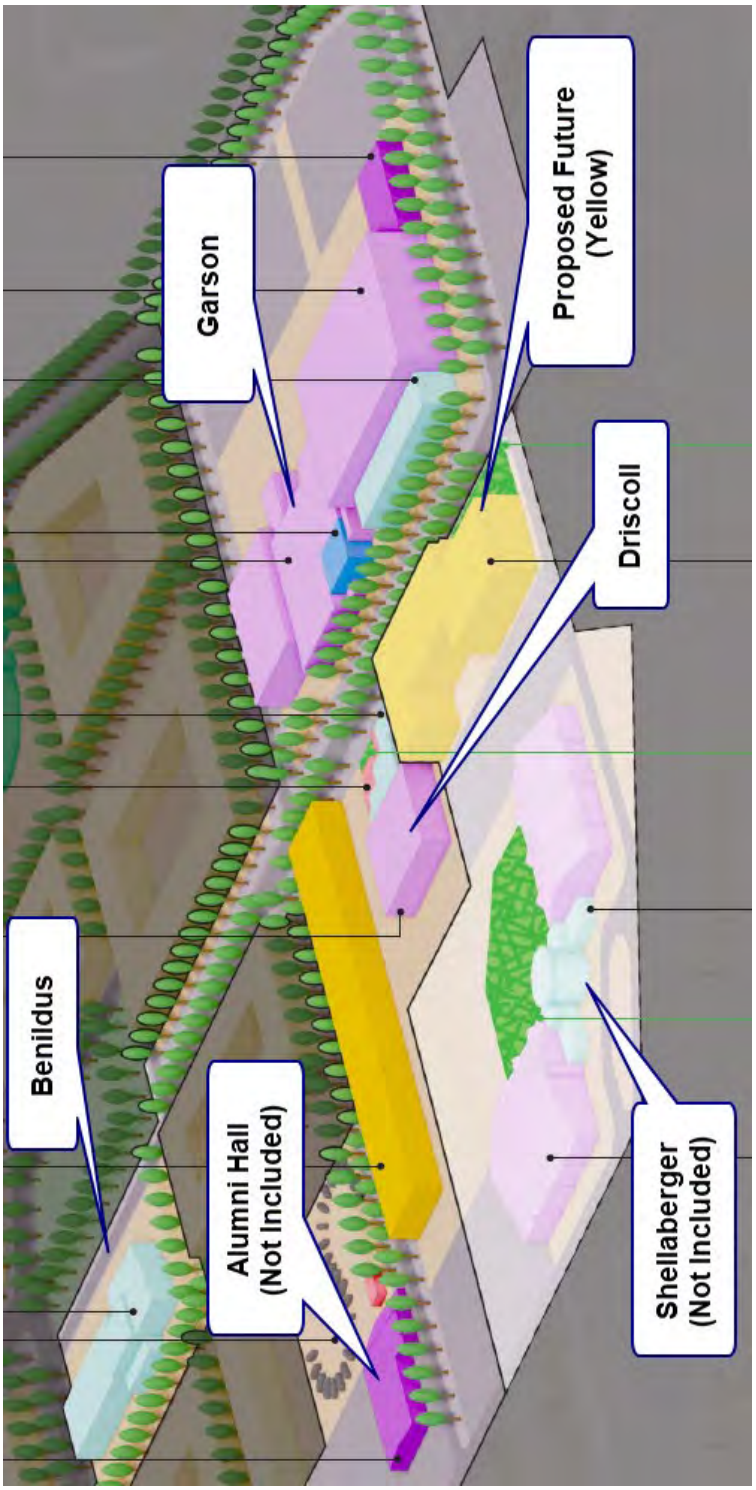

© 2024 CBRE, Inc.

Improvements Analysis

The following chart shows a summary of the improvements.

IMPROVEMENTS SUMMARY AND ANALYSIS		
Property Type	Office	(Single Tenant)
Number of Buildings	3	
Number of Stories	2	
Gross Building Area	98,677 SF	
Net Rentable Area	98,677 SF	
Area Breakdown by Market Rent Categories		
Industrial Space	11,200 SF	
Office Space	87,477 SF	
Site Coverage	8.2%	
Parking Improvements	Surface	Benildus lacks adequate parking
Year Built	1968	
Actual Age	55 Years	
Effective Age	25 Years	
Total Economic Life	50 Years	
Remaining Economic Life	25 Years	
Age/Life Depreciation	50.0%	
Functional Utility	Typical	

Building Number	Improvement Type	% A/C	Size (SF)	% Office	Clear Height	Year Built/ Renovated
Building 1	Benildus Hall	100%	27,757	100.0%	'	1963 / 2005
Building 2	Driscoll Fitness Center	100%	22,200	50.0%	20' - 22'	1993
Building 3	Garson Studio Complex	100%	49,200	100.0%	20' - 22'	1991

Source: Various sources compiled by CBRE

The following illustrates the key features/components of the subject improvements for each building.

© 2024 CBRE, Inc.

IMPROVEMENT DESCRIPTION & RATING		Driscoll
Improvement Summary	**Description (Driscoll Fitness Center)**	**Comparative Rating**
Foundation	Reinforced concrete perimeter / column pad footing	Average
Frame	Steel	Average
Exterior Walls	Painted stucco	Average
Interior Walls	Painted drywall / wood panels	Average
Roof	Built-up composition	Average
Ceiling	Suspended acoustical tile / exposed	Average
HVAC System	Roof mounted HVAC units	Average
Exterior Lighting	Incandescent fixtures	Average
Interior Lighting	Recessed & hanging Fluorescent	Average
Flooring	Carpet / wood	Average
Plumbing	Assumed adequate	Average
Elevators/Stairwells	None	Average
Fire protection	Smoke detectors / fire alarm / sprinklers	Average
Amenities	Basketball court (1) / racquetball court (2) / male & female locker rooms / exercise rooms	Average
Furnishings	Personal property excluded	Average

IMPROVEMENT DESCRIPTION & RATING		
Improvement Summary	**Description (Benildus Hall)**	**Comparative Rating**
Foundation	Reinforced concrete perimeter / column pad footing	Average
Frame	Masonry	Average
Exterior Walls	Painted Stucco / stone / brick	Average
Interior Walls	Painted drywall / glazed block	Average
Roof	Built-up composition	Average
Ceiling	Painted drywall / suspended	Average
HVAC System	Roof mounted HVAC units	Average
Exterior Lighting	Incandescent fixtures	Average
Interior Lighting	Recessesed fluorescent	Average
Flooring	Terrazzo / carpet	Average
Plumbing	Assumed adequate	Average
Elevators/Stairwells	Stiarway (4) elevator 2,500 lb. (1)	Average
Fire protection	Smoke detectors / sprinklers / alarm system	Average
Amenities	Multi-purpose room / music studios	Average
Furnishings	Personal property excluded	Average

Improvement Summary	**Description (Garson Studio Complex)**	**Comparative Rating**
Foundation	Reinforced concrete perimeter / column pad footing	Average
Frame	Masonry / concrete / steel	Average
Exterior Walls	Painted stucco	Average
Interior Walls	Painted drywall & block / acoustical panels	Average
Roof	Built-up composition	Average
Ceiling	Suspended acoustical tile / exposed structure	Average
HVAC System	Roof mounted HVAC units	Average
Exterior Lighting	Incandescent fixtures	Average
Interior Lighting	Recessed & hanging fluorescent / incandescent / PAR theatrical / HID fixtures	Average
Flooring	Carpet / wood / vinyl tile	Average
Plumbing	Assumed Adequate	Average
Elevators/Stairwells	Stairway (2) elevator 2,100 lb. (1)	Average
Elevators		Average
Smoke Detectors		Average
Sprinkler System		Average
Fire protection	Smoke detectors / sprinklers	Average
Amenities	Movie theater / (2) sound stage / showers / laundry / observation booth / sound booth/ TV control room	Average
Furnishings	Personal property excluded	Average

Source: Various sources compiled by CBRE

© 2024 CBRE, Inc.

BUILDING DESCRIPTIONS

Garson Studios is 49,200 square feet, built in 1991, consisting of offices, a theater, and production sound stages of 14,000 square feet, 7,500 square feet, and 2,100 square feet. It has some deferred maintenance (see below) and is in average condition with some updating of interior finishes. The offices are in use as support for film production.

Driscoll Fitness Center is 22,200 square feet, built in 1993, and was used as an athletic complex, including dance studios, fitness center, locker rooms, and a large gymnasium. The gym has been converted into an industrial shop, with removal of the gym floor and athletic fixtures. There were initial plans to convert this space into a production studio, but subsequent engineering reports indicate this may not be feasible as the building cannot support the necessary infrastructure, so its likely use is for construction and maintenance support.

Benildus Hall is 27,757 square feet, constructed as a classroom and educational office. It was built in 1963, with an addition in 2005. There are some classrooms of varying sizes, and offices throughout, including recording and sound studio use. The interior finish has been remodeled, likely around the time of the addition in 2005.

PARKING AND DRIVES

All parking spaces and vehicle drives are concrete paved and considered to be in average condition. Patron parking areas are along the front and sides of the building. Benildus lacks adequate parking, and the developer has proposed that the City will provide 50 spaces at a market rental rate.

LANDSCAPING

Landscaping is considered to be in average condition, but has not been maintained for several years.

FUNCTIONAL UTILITY

The overall layout of the property is considered functional in utility for scholastic use, and will require reconfiguration for office or film use.

ADA COMPLIANCE

All common areas of the property appear to have handicap accessibility. The client/reader's attention is directed to the specific limiting conditions regarding ADA compliance.

FURNITURE, FIXTURES AND EQUIPMENT

Any personal property items contained in the property are not included in this analysis.

© 2024 CBRE, Inc.

ENVIRONMENTAL ISSUES

The appraiser is not qualified to detect the existence of potentially hazardous material or underground storage tanks which may be present on or near the site. The existence of hazardous materials or underground storage tanks may affect the value of the property. For this appraisal, CBRE, Inc. has specifically assumed that the property is not affected by any hazardous materials that may be present on or near the property.

CONDITION ANALYSIS

Facility assessment reports were prepared for each building. Significant items of deferred maintenance were identified, including renovations and alterations for ADA compliance, upgrading electrical, fire suppression systems, and HVAC to code, and general repairs to roofs, ceilings, floor coverings, plumbing and electrical systems and fixtures. Portions of the reports are included in the addenda.

DEFERRED MAINTENANCE

The following chart shows the deferred maintenance items identified and their respective estimated costs to cure, based upon all available information, as of the relevant dates.

ANALYSIS OF DEFERRED MAINTENANCE	
Benildus Hall	$1,759,269
Driscoll Fitness Center	$1,284,847
Garson Studios	$2,696,459
Site and Infrastructure	$500,000
Subtotal	$6,240,575
Plus: Profit @ 15%	$936,086
Total Deferred Maintenance:	$7,176,661
Source: Wilson & Co. Facility Assessments Jan. 2023	

The total deferred maintenance estimate will be deducted from each approach in order to conclude the "as is" value for the subject.

ECONOMIC AGE AND LIFE

CBRE, Inc.'s estimate of the subject improvements effective age and remaining economic life is depicted in the following chart:

ECONOMIC AGE AND LIFE	
Actual Age	56 Years
Effective Age	25 Years
MVS Expected Life	50 Years
Remaining Economic Life	25 Years
Accrued Physical Incurable Depreciation	50.0%
Compiled by CBRE	

© 2024 CBRE, Inc.

The remaining economic life is based upon our on-site observations and a comparative analysis of typical life expectancies as published by Marshall and Swift, LLC, in the Marshall Valuation Service cost guide. While CBRE, Inc. did not observe anything to suggest a different economic life, a capital improvement program could extend the life expectancy.

CONCLUSION

The improvements are in average overall condition. With completion of the repairs identified in the facility conditions reports, there are no known factors that adversely impact the marketability of the improvements.

© 2024 CBRE, Inc.

ZONING MAP

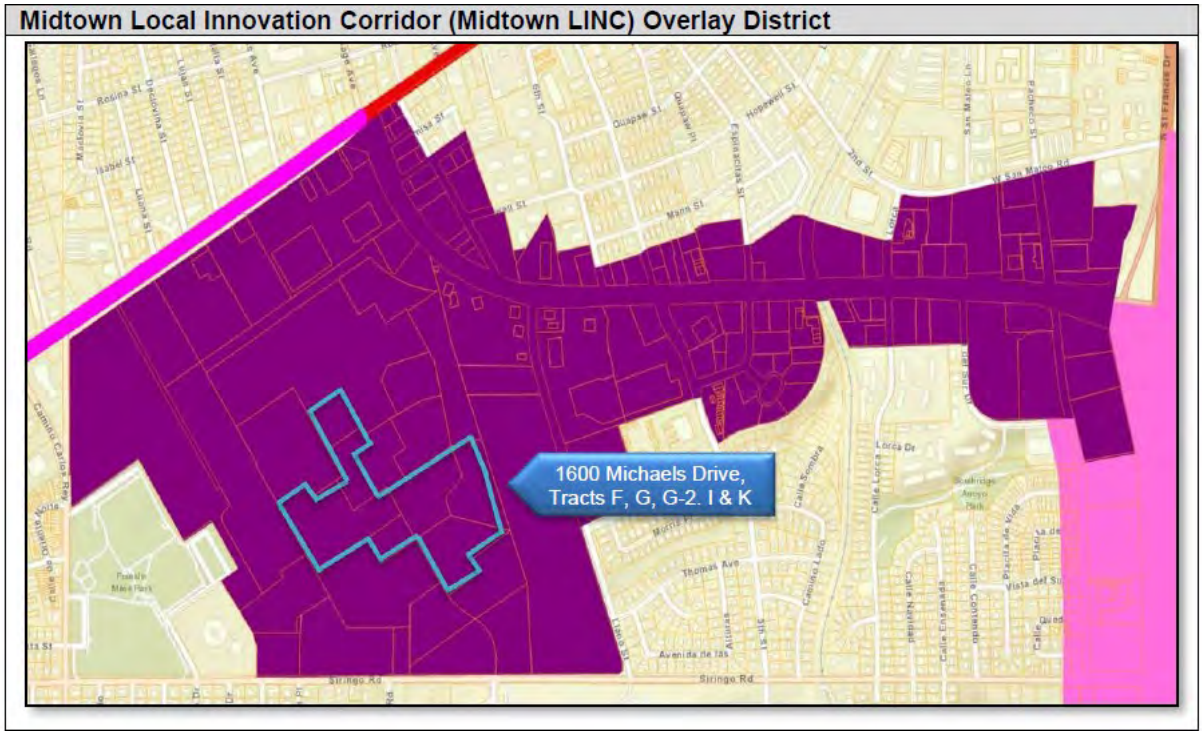

© 2024 CBRE, Inc.

ZONING MAP

Opportunity Zone: Census Tract 11:03 Midtown Campus Area

Additional: Opportunity Zone-Census Tract 11.03: Midtown Campus Area

Federal Opportunity Zones (QOZ's) are a new community development program established by Congress in the Tax Cuts and Jobs Act of 2017 to encourage long-term investments in low-income urban and rural communities nationwide. The QOZ program provides a tax incentive for investors to re-invest their unrealized capital gains into Opportunity Funds (QOF's) that are dedicated to investing into QOZ's designated by the chief executives of every U.S. state and territory.

Governor Martinez approved the subject census tract for designation to the US Treasury. Finally, designation approval was received by U.S. Treasury in June 2018.

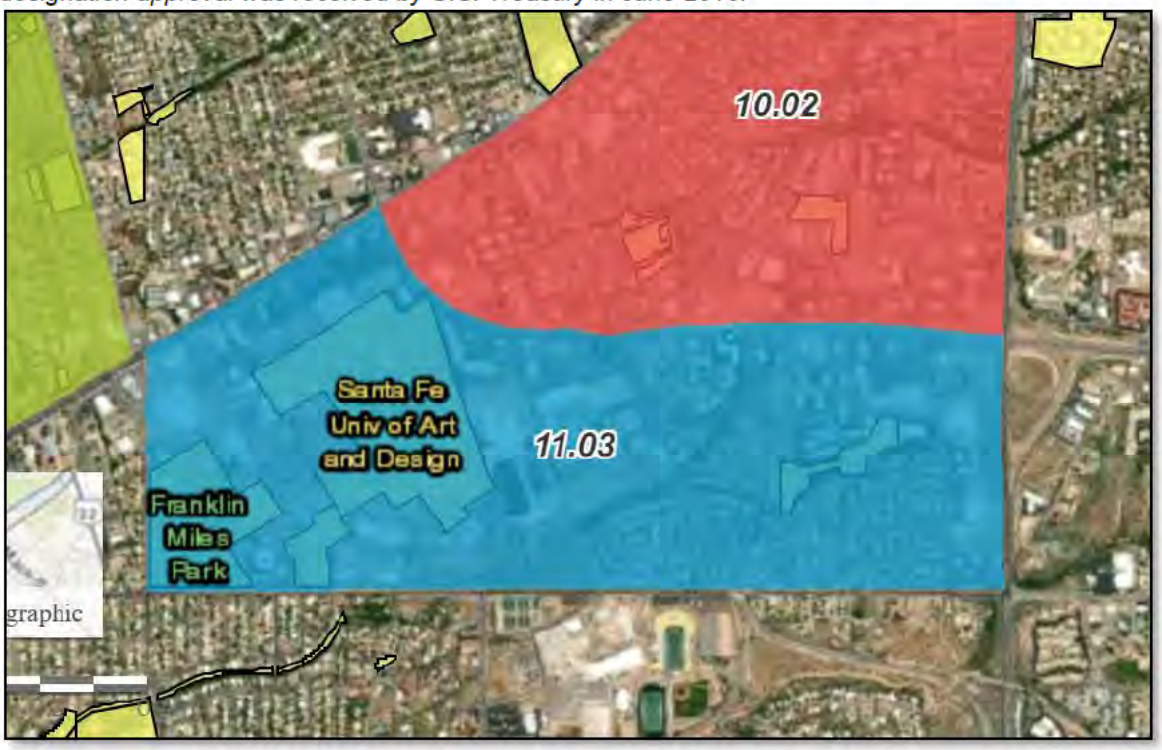

Source: https://www.santafenm.gov/opportunity_zones_in_santa_fe

© 2024 CBRE, Inc.

ZONING MAP

Midtown Proposed Master Plan

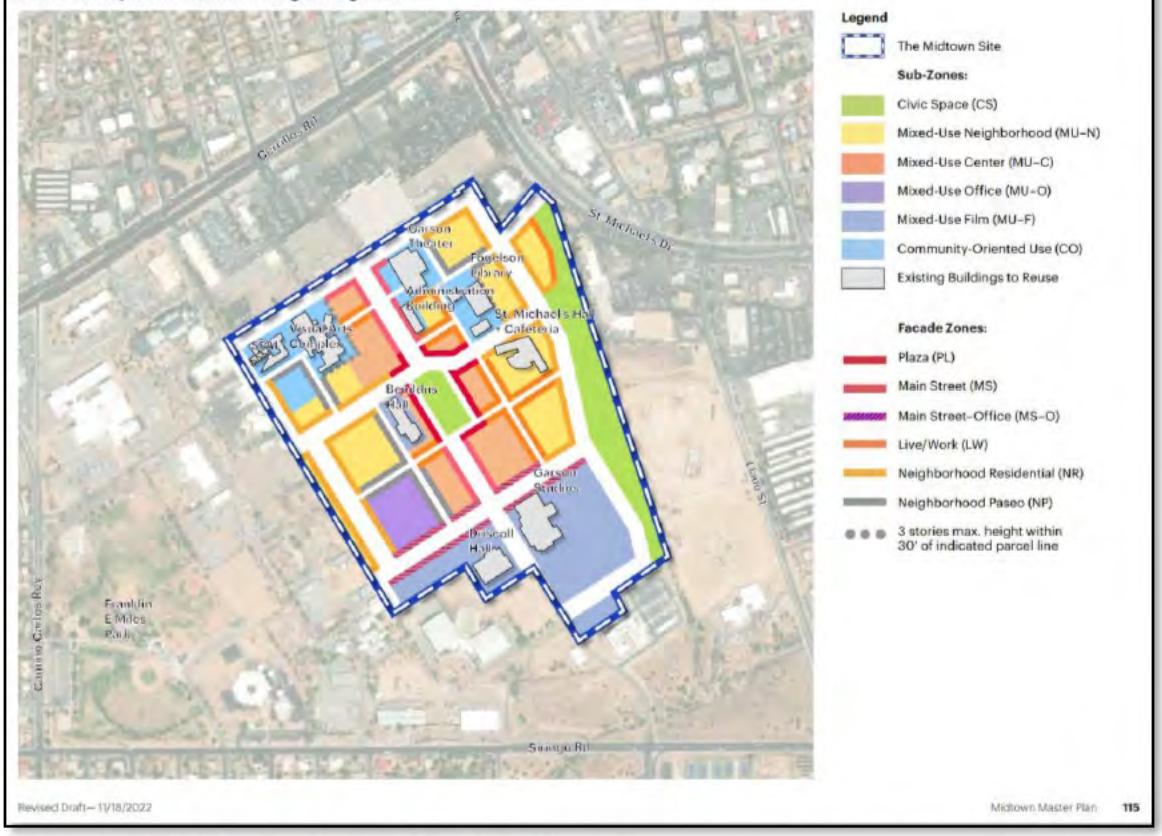

Source: City of Santa Fe Midtown Proposed Master Plan (11/21/2023)

© 2024 CBRE, Inc.

Zoning

The following chart summarizes the subject's zoning requirements.

ZONING SUMMARY	
Current Zoning	Midtown LINC Overlay District
Legally Conforming	Yes
Uses Permitted	This district was developed to strengthen and animate the existing environment of the geographic center of the city. Especially the Santa Fe University of Art and Design and the Christus St. Vincent Regional Medical Center. This district incentivizes multi-family residential development and non-residential use, as well as improves and encourages pedestrian traffic. This district also provides more flexibility in sign design and location to encourage communications and business identification for existing buildings who have previously suffered from poor visibility
Zoning Change	Not likely
Category	**Zoning Requirement**
Maximum Height	62 Feet
Minimum Setbacks	
Front Yard	5 Feet
Street Side Yard	5 Feet
Interior Side Yard	5 Feet
Rear Yard	5 Feet
Maximum Bldg. Coverage	None
Maximum FAR/Density	None
Subject's Actual FAR	None
Parking Requirements	None
Subject's Actual Parking	3.49 spaces / 1000 SF
Source: Planning & Zoning Dept.	

ANALYSIS AND CONCLUSION

Although the subject property has operated as an educational and film production property, it has been zoned R-5 Residential. More recently, through a City of Santa Fe Resolution 2018-54 and 2022-12, the property is in the formal process of being rezoned to C-2, which will be the base zoning considered in this report. In addition to this base zoning the subject is located within the Midtown Local Innovation Corridor (Midtown LINC) Overlay District and the Opportunity Zone: Census Tract 11:03 Midtown Campus Area.

The City of Santa Fe's proposed Midtown Master Plan (the Midtown Land Development Plan), dated November 21, 2022, provided new development standards for the subject property in Chapter 5. The development standards are comprised of subzone (controls use) and façade (controls building masing and design) standards. The sub-zones support the objectives of the

© 2024 CBRE, Inc.

aforementioned Census Tract 11:03 Midtown Campus Area Opportunity Zone and Midtown LINC Overlay District, as well as Resolution No. 2022-12, which rezones the subject to a C-2 General Commercial District to allow for commercial, retail and residential uses. The subject is contained within the mixed-use film zone, for film production activities focused in the Garson Studios. It is presumed that adaptation of the property buildings will conform with this general designation, and that future improvements will conform to requirements of the zoning districts, master plan, and overlays.

It is beyond the scope of this analysis to determine the precise zoning designation and future use for each building and site in this analysis. The current improvements are believed to represent a legally-conforming use as of the effective date of the appraisal. Additional information may be obtained from the appropriate governmental authority. For purposes of this appraisal, CBRE has assumed the information obtained is correct.

© 2024 CBRE, Inc.

Tax and Assessment Data

The property has historically been owned by the City of Santa Fe and has been exempt from taxation. There are no truly comparable privately owned tax parcels in the jurisdiction to our knowledge. We have considered expense comparables in the income approach, and estimated a likely assessed value from our value conclusions. Our pro forma estimate of the assessed values and tax obligation is shown below.

AD VALOREM TAX INFORMATION

Parcel	Assessor's Parcel No.	Pro Forma
1	1052097137176000000	
	Subtotal	$10,000,000
	% of Assessed Value	33%
	Final Assessed Value	$3,333,000
	General Tax Rate (per $1,000 A.V.)	47.500000
	General Tax:	$158,318
	Effective Tax Rate (per $1,000 A.V.)	47.500000
	Total Taxes	**$158,318**
	Taxes per SF	$1.60

Source: Assessor's Office

CONCLUSION

Based on the foregoing information, the subject's current assessment is well supported by both its historical trend and by the comparable properties shown.

Based on the foregoing, the total taxes for the subject have been estimated as $158,318 for the base year of our analysis, based upon an assessed value of $3,333,000 or $33.78 per square foot.

For purposes of this analysis, CBRE, Inc. assumes that all taxes are current.

© 2024 CBRE, Inc.

Market Analysis

The market analysis forms a basis for assessing market area boundaries, supply and demand factors, and indications of financial feasibility. Primary data sources utilized for this analysis include IBISWorld and CoStar.

The subject is in the Santa Fe market and is considered a studio property, its main components are primarily functional as office. We have included portions of the IBISWorld Film Production Industry Report, and analysis of the local Santa Fe office market.

MOVIE AND VIDEO PRODUCTION IN THE UNITED STATES

The Movie and Video Production industry has grappled with stark declines over the past five years as the COVID-19 pandemic rattled movie production. Producers have benefited from steady demand for entertainment but have been hindered by the expansion of online streaming options. Since overall box office sales have fallen, the industry's business model has shifted to prioritize blockbusters and rely on foreign distribution. Digital distribution is also a growing revenue stream despite digital streaming being a source of competition. Overall, revenue for the Movie and Video Production industry has fallen at a CAGR of 3.4% to $31.6 billion through the end of 2023, with revenue rising 1.2% in 2023 as the industry recovers.

Slow box office receipts have made the industry more risk-averse in recent years. Producers have relied more on blockbusters, especially those based on existing creative properties. Studios are placing bigger bets on action movies, which fare best with both domestic and foreign moviegoers. The focus on blockbusters has kept profit high despite troubles. Still, this business strategy will make studios more vulnerable to profit losses in the future, given the fast-changing nature of consumer tastes. Major studios are catching on to the rapidly expanding digital distribution channel, with many investing in their own streaming platforms. More recently, widespread strikes have impeded production.

Over the next five years, movie and video producers will find growth opportunities in digital distribution and television licensing. Studios will focus more on original content and creating their own distribution channels. The box office will grow sluggishly as online streaming platforms continue to draw consumers away from theaters. Major studios will compete more fiercely by using new production technologies and advertising to younger consumers. Video producers will also find opportunities in social media and digital streaming platforms. Revenue is expected to rise at a CAGR of 3.5% through the end of 2028 to reach $37.5 billion.

© 2024 CBRE, Inc.

AT A GLANCE

Revenue **$31.6bn** '18-'23 ↓ 3.4 % '23-'28 ↑ 3.5 %	Employees **92,651** '18-'23 ↑ 1.8 % '23-'28 ↑ 3.5 %	Businesses **49,321** '18-'23 ↑ 6.8 % '23-'28 ↑ 5.6 %
Profit **$3.4bn** '18-'23 ↓ 6.7 %	Profit Margin **10.8%** '18-'23 ↓ 2.1 pp	Wages **$6.7bn** '18-'23 ↑ 0.9 % '23-'28 ↑ 3.5 %

Key Takeaways

Performance

Major movie producers lean on box office blockbusters to generate low-risk sales. Theater attendance is steadily declining as video streaming options expand.

Online streaming encroaches on box office sales but provides a new revenue channel for producers. Digital distribution is quickly growing as a share of movie and video production revenue.

Video producers are finding new opportunities through social media and digital streaming platforms. Platforms like Twitch and YouTube are investing in professional video producers to create content.

SAG-AFTRA and major producers have settled a contract after a months-long strike. While the strike has been resolved, the repercussions of the long hiatus have been immense on the industry.

External Environment

Unions up the cost of labor for movie producers. Producers are bound by the wages unions negotiate for media professionals and may contend with strikes and production disruptions when fair wages aren't met.

Copyright laws protect key revenue channels for movie producers by preventing the unlawful distribution of content. Movie producers are also held accountable by copyright laws, ensuring they have the proper authorization to use copyrighted material in their works.

© 2024 CBRE, Inc.

Performance Snapshot

REVENUE:

Revenue	2023 Revenue CAGR	Revenue Volatility
$31.6bn '18-'23 ↓ 3.4 % '23-'28 ↑ 3.5 %	↑ 1.2 %	↓ High

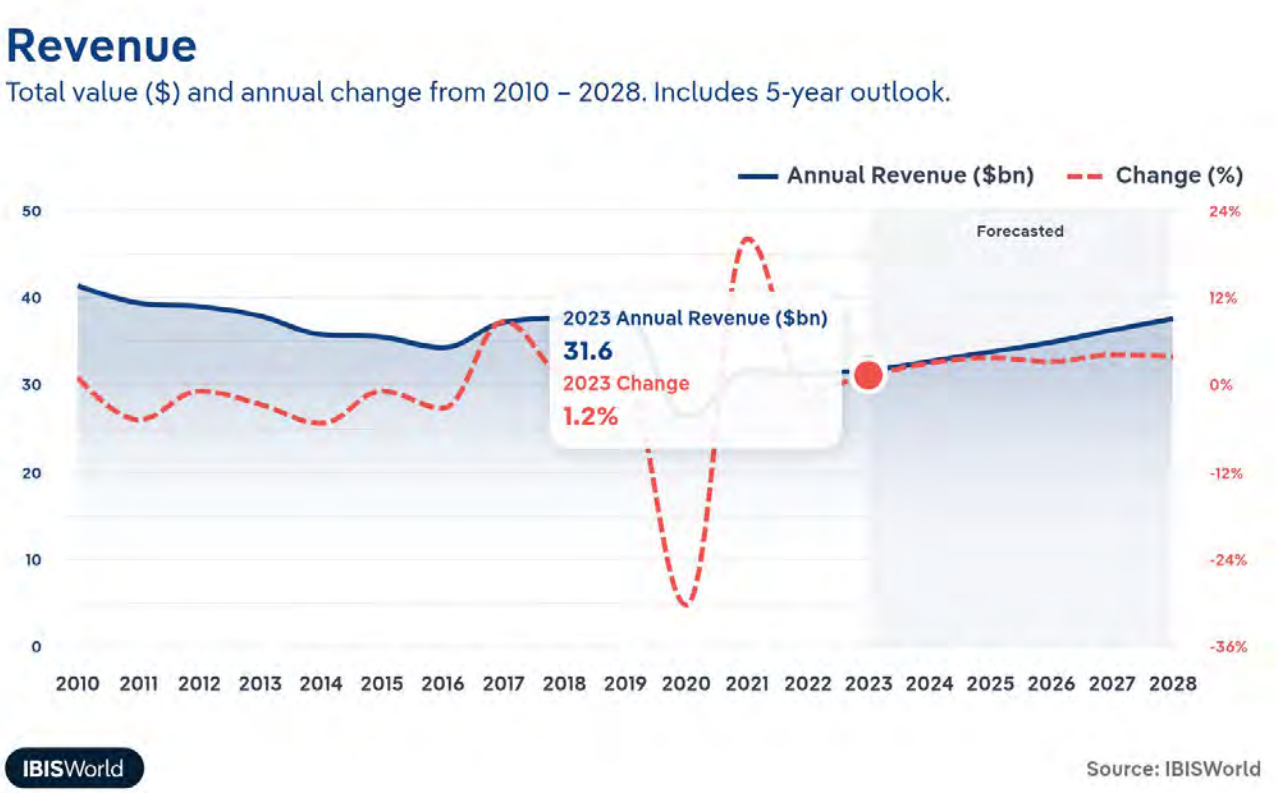

© 2024 CBRE, Inc.

EMPLOYEES:

Employees	Employees per Business	Revenue per Employee
92,651	2	$342k
'18-'23 ↑ 1.8 %	'18-'23 ↓ 4.7 %	'18-'23 ↓ 5.1 %
'23-'28 ↑ 3.5 %	'23-'28 ↓ 1.9 %	'23-'28 ↓ 0.1 %

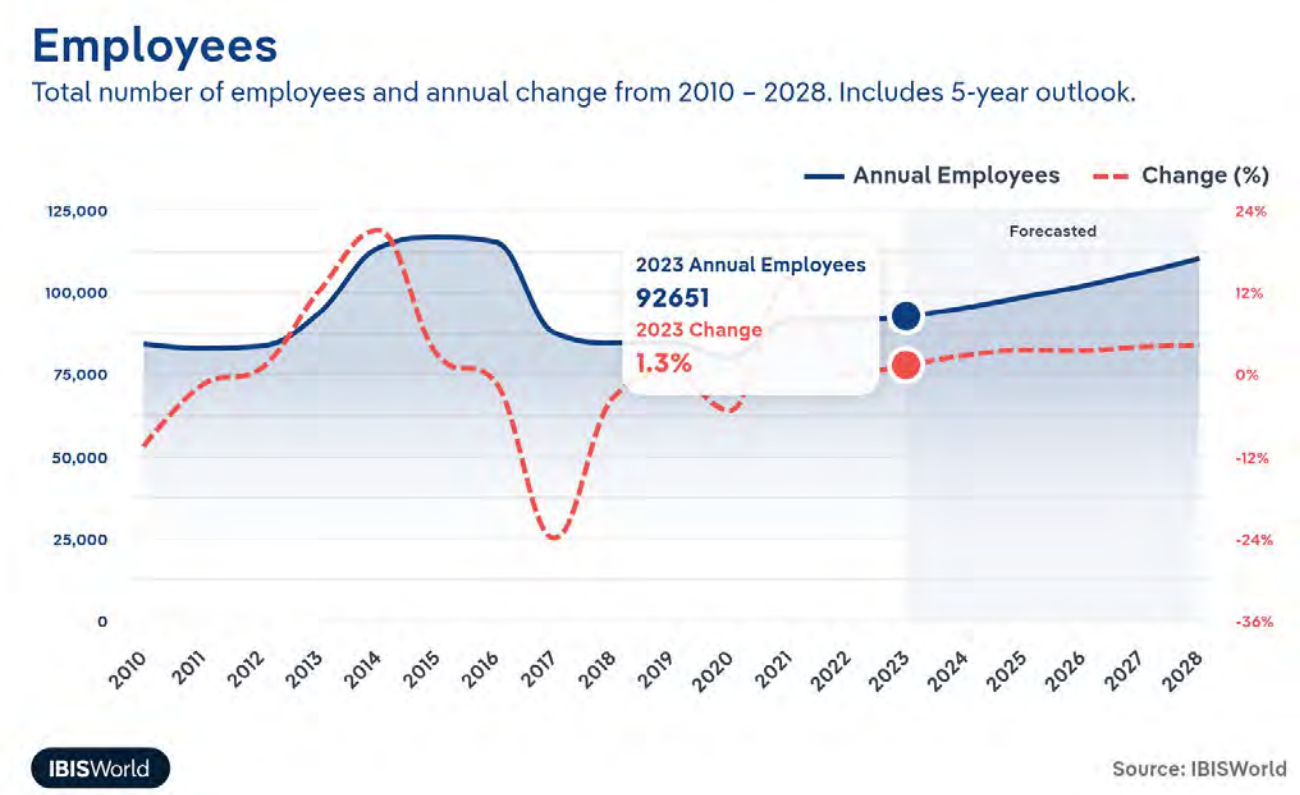

© 2024 CBRE, Inc.

BUSINESSES:

Businesses	Employees per Business	Revenue per Business
49,321	2	$641.7k
'18-'23 ↑ 6.8 %	'18-'23 ↓ 4.7 %	'18-'23 ↓ 9.6 %
'23-'28 ↑ 5.6 %	'23-'28 ↓ 1.9 %	'23-'28 ↓ 2.0 %

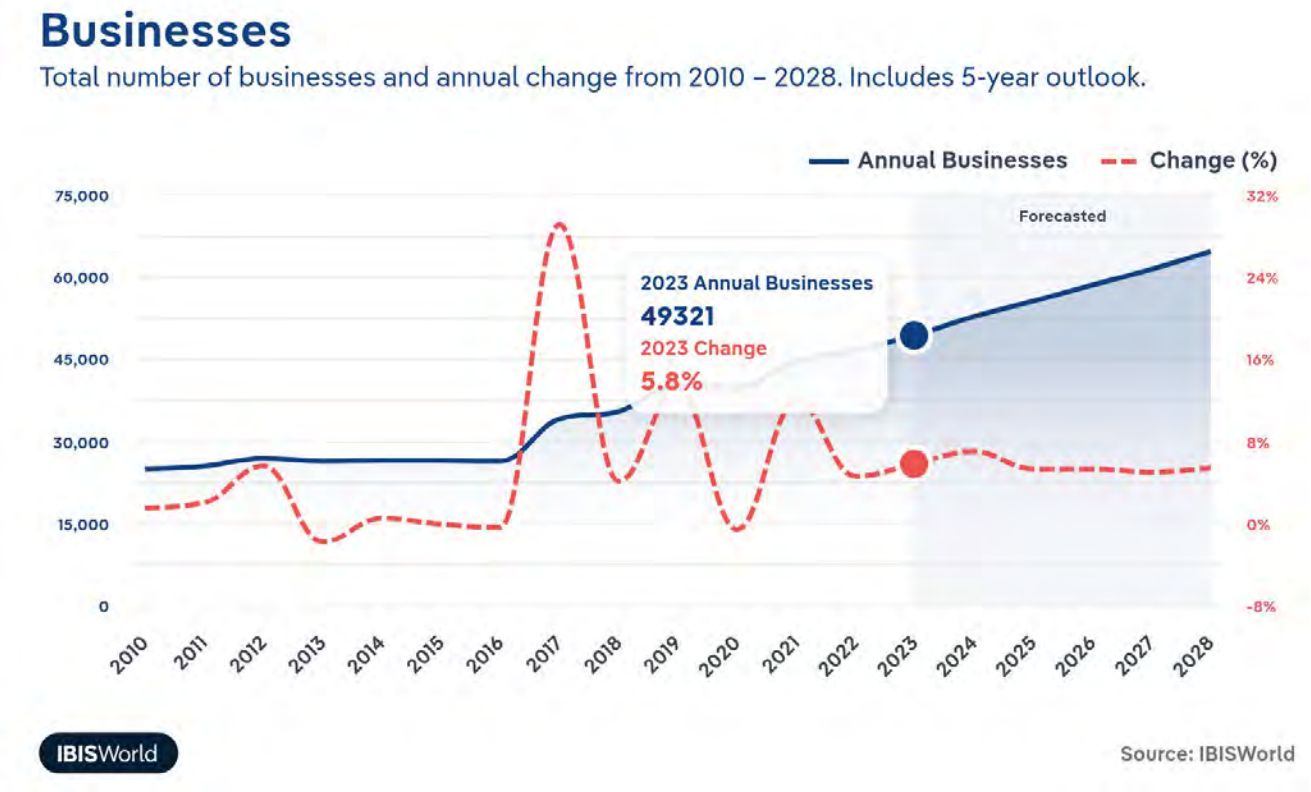

© 2024 CBRE, Inc.

Key External Drivers

Key External Drivers	Impact
Demand from movie theaters	Positive
Total advertising expenditure	Positive
Per capita disposable income	Positive
Trade-weighted index	Negative

Industry Structure

Characteristic	Level	Trend
Concentration	Moderate	
Barriers To Entry	Moderate	Increasing
Regulation and Policy	Moderate	Increasing
Life Cycle	Mature	
Revenue Volatility	High	
Capital Intensity	Low	
Assistance	High	Decreasing
Competition	High	Increasing
Innovation	Moderate	

PERFORMANCE SNAPSHOT

WHAT'S DRIVING CURRENT INDUSTRY PERFORMANCE?

Producers turn to risk-averse blockbusters

- Sluggish box office sales have made film studios more risk-averse, a trend that's been gradually unfolding over the past decade. This stems in part from other technologies competing for audiences' time.
- Franchises and sequels represent tested concepts with more assured box office success that can subsidize studios' riskier bets on new creative enterprises. Betting on intellectual property has become more reliable than building projects around star power.

© 2024 CBRE, Inc.

- Film studios have become more reliant on the success of sequels, franchises and intellectual property based films, as they also have high returns on interest. This limitation has contributed to the Movie and Film Production Industry's overall decline.

COVID-19 rattles filmmaking

- The COVID-19 pandemic was the driving force behind the industry's poor performance through the end of 2023, as most domestic movie theaters closed in March 2020.
- Many studio blockbusters postponed their releases to 2021, and changes in release dates created a domino effect for other releases, compounding the adverse effects of the pandemic.
- Although box office sales declined, stay-at-home orders and theater closures helped boost sales from digital distribution and licensing. While demand was high during the COVID-19 pandemic, many Movie and Video production companies had to pause production, driving down industry revenue.

Studios leverage digital platforms to generate revenue

- The increasing accessibility of video content online has diminished the incentive to spend on a movie theater experience, producing a consumer shift in favor of at-home entertainment.
- Major studios used COVID-19 disruptions to leverage revenue from and expand their digital platforms. These methods helped prevent further declines despite tumbling box office sales.
- Warner Bros. Studios began a monthly release of its theatrical slate after disastrous box office results for its summer 2020 blockbuster, Tenet.
- The industry's transition to digital streaming platforms is one of the many motivating factors behind the 2023 widespread strikes. The strikes have halted many productions, and though the end is in sight the damage has been done.

Online substitutes provide new outlets for video producers

- Videos are becoming an increasingly popular form of communication, with businesses and individuals taking advantage of their ability to reach a large audience.
- Although online video platforms, like Twitch and YouTube, draw consumers away from theaters, they've also opened up new avenues for video producers, therefore have a mixed effect on the Movie and Video Production Industry in the US.

Production costs have decreased recently, making video production more accessible to a broader range of customers. Each of these new filmmakers, on some level, present a certain level of competition to larger players in the Movie and Video Production industry in the US.

© 2024 CBRE, Inc.

SWOT

S
Strengths
Low Imports
Low Capital Requirements

W
Weaknesses
High & Decreasing Level of Assistance
High Competition
Very high Volatility
Low Profit vs. Sector Average
High Customer Class Concentration
High Product/Service Concentration
Low Revenue per Employee

O
Opportunities
Total advertising expenditure
High Revenue Growth (2018-2023)
High Revenue Growth (2023-2028)
High Performance Drivers

T
Threats
Very Low Revenue Growth (2005-2023)
Low Outlier Growth
Trade-weighted index

© 2024 CBRE, Inc.

METROPOLITAN SANTA FE - NM OFFICE MARKET OVERVIEW

Recent Performance

The following table summarizes historical and projected performance for the overall metropolitan Santa Fe - NM office market, as reported by CoStar.

SANTA FE - NM OFFICE MARKET

Year Ending	Inventory (SF)	Completions (SF)	Occupied Stock (SF)	Occupancy	Asking Rent ($/SF Gross)	Asking Rent Change	Net Absorption (SF)	Transaction Price Per Area (SF)
2014	7,549,924	4,400	6,961,605	92.2%	$18.58	7.82%	-63,674	$129.61
2015	7,553,538	3,614	7,068,813	93.6%	$18.81	1.25%	107,208	$196.93
2016	7,553,538	0	7,219,222	95.6%	$19.13	1.72%	150,409	$247.79
2017	7,558,277	4,739	7,261,391	96.1%	$19.13	0.00%	42,169	$80.25
2018	7,568,277	10,000	7,297,999	96.4%	$20.16	5.36%	36,608	$152.52
2019	7,534,493	-33,784	7,309,688	97.0%	$20.73	2.84%	11,689	$131.55
2020	7,536,707	2,214	7,229,362	95.9%	$20.74	0.05%	-80,326	$139.31
2021	7,536,707	0	7,331,451	97.3%	$21.70	4.62%	102,089	$119.46
Q1 2022	*7,536,707*	*0*	*7,298,711*	*96.8%*	*$22.09*	*1.80%*	*-32,740*	*$190.38*
Q2 2022	*7,536,707*	*0*	*7,331,300*	*97.3%*	*$22.37*	*1.31%*	*32,589*	*$139.11*
Q3 2022	*7,536,707*	*0*	*7,370,826*	*97.8%*	*$22.45*	*0.34%*	*39,526*	-
Q4 2022	*7,536,707*	*0*	*7,403,176*	*98.2%*	*$22.68*	*1.00%*	*32,350*	*$180.23*
2022	7,536,707	0	7,403,176	98.2%	$22.68	4.52%	71,725	$180.23
Q1 2023	*7,536,707*	*0*	*7,457,231*	*98.9%*	*$22.92*	*1.08%*	*54,055*	-
Q2 2023	*7,536,707*	*0*	*7,456,235*	*98.9%*	*$23.06*	*0.60%*	*-996*	*$191.95*
Q3 2023	*7,536,707*	*0*	*7,460,477*	*99.0%*	*$23.09*	*0.15%*	*4,242*	-
*Q4 2023**	*7,536,707*	*0*	*7,425,465*	*98.5%*	*$23.19*	*0.40%*	*-35,009*	-
2023*	7,536,707	0	7,425,465	98.5%	$23.19	2.25%	22,292	-
2024*	7,531,947	-4,760	7,350,467	97.6%	$23.16	-0.13%	-74,139	-
2025*	7,527,635	-4,312	7,327,482	97.3%	$23.28	0.54%	-21,880	-
2026*	7,524,892	-2,743	7,305,978	97.1%	$23.44	0.69%	-20,437	-
2027*	7,522,983	-1,909	7,275,511	96.7%	$23.57	0.53%	-29,364	-
2028*	7,521,471	-1,512	7,245,931	96.3%	$23.64	0.33%	-28,502	-

* Future Projected Data according to CoStar

Source: CoStar, 3rd Quarter 2023

The Santa Fe - NM office market consists of approximately 7,536,707 square feet of office space. The following observations are noted from the table above:

- As of 3rd Quarter 2023, there was approximately 7,460,477 square feet of occupied office space (including sublet space), resulting in an occupancy rate of 99.0% for the metro area. This reflects a small increase from the previous quarter's occupancy of 98.9%, and an increase from an occupancy rate of 98.2% from last year.
- The area experienced positive 4,242 square feet of net absorption for the current quarter. This indicates an improvement from the previous quarter's negative 996 square feet of net absorption, and a decline from the positive 71,725 square feet of net absorption from last year.
- The area had zero completions for the current quarter, which indicates no change from the previous quarter's zero completions, and is unchanged from zero completions from last year.

© 2024 CBRE, Inc.

- The area achieved average asking rent of $23.09 per square foot, which indicates a small increase from the previous quarter's asking rent of $23.06 per square foot, and an increase from the asking rent of $22.68 per square foot from last year.

Historical Inventory – Market

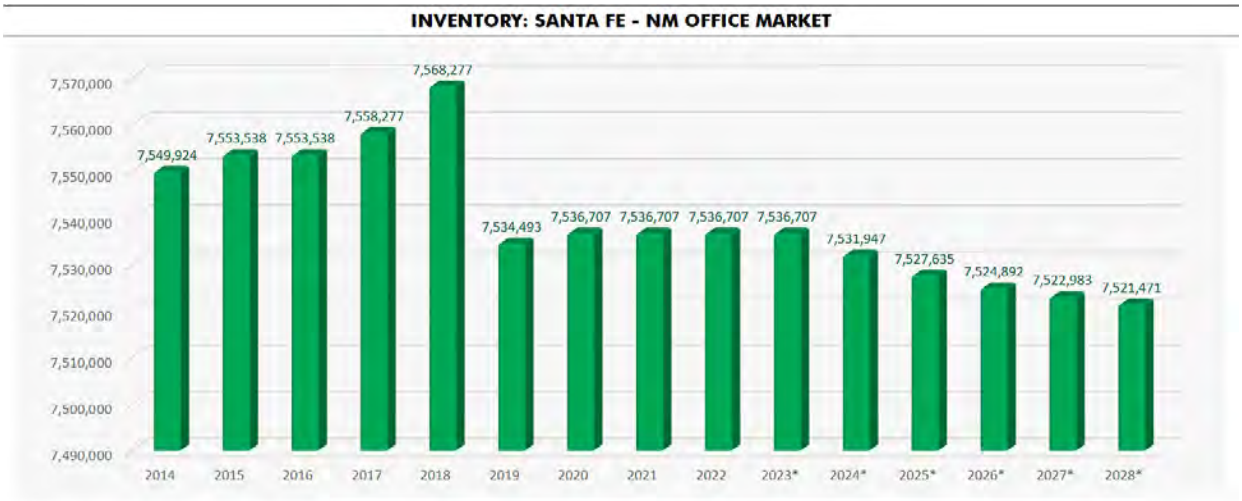

* Future Projected Data according to CoStar

Source: CoStar, 3rd Quarter 2023

Inventory is projected to be 7,536,707 square feet at the end of the current year, which represents no change from the previous year's inventory of 7,536,707 square feet. Inventory for next year is projected to be 7,531,947 square feet, reflecting a decrease from the current year.

Historical Occupancy - Market

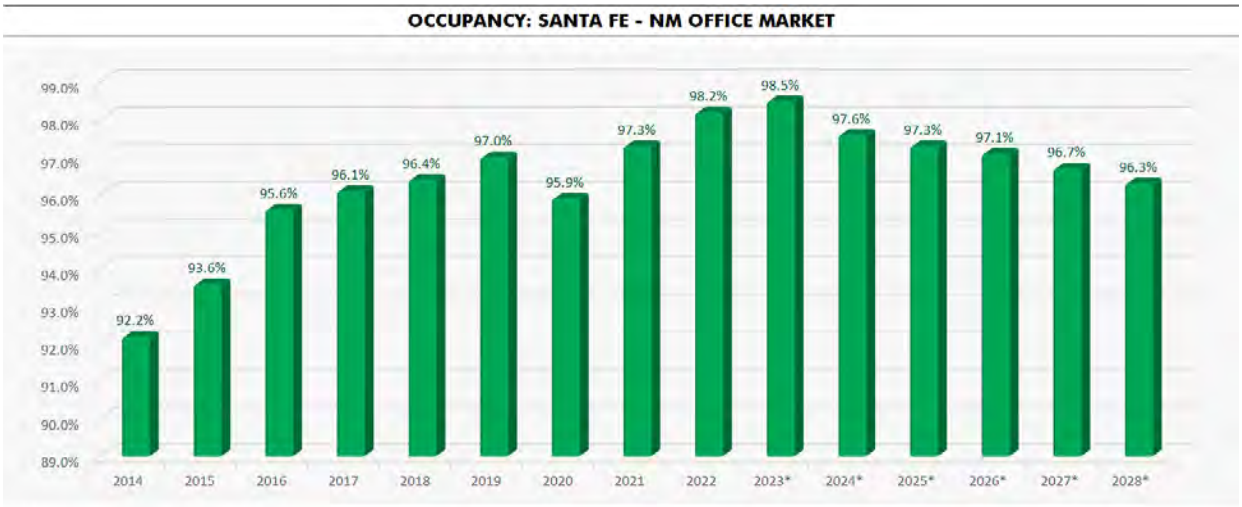

* Future Projected Data according to CoStar

Source: CoStar, 3rd Quarter 2023

At the end of the current year, the occupancy rate is projected to be 98.5%, which reflects an increase from the 98.2% occupancy rate at the end of last year. Occupancy for next year is projected to be 97.6%, reflecting a decrease from the current year.

© 2024 CBRE, Inc.

Historical Net Absorption - Market

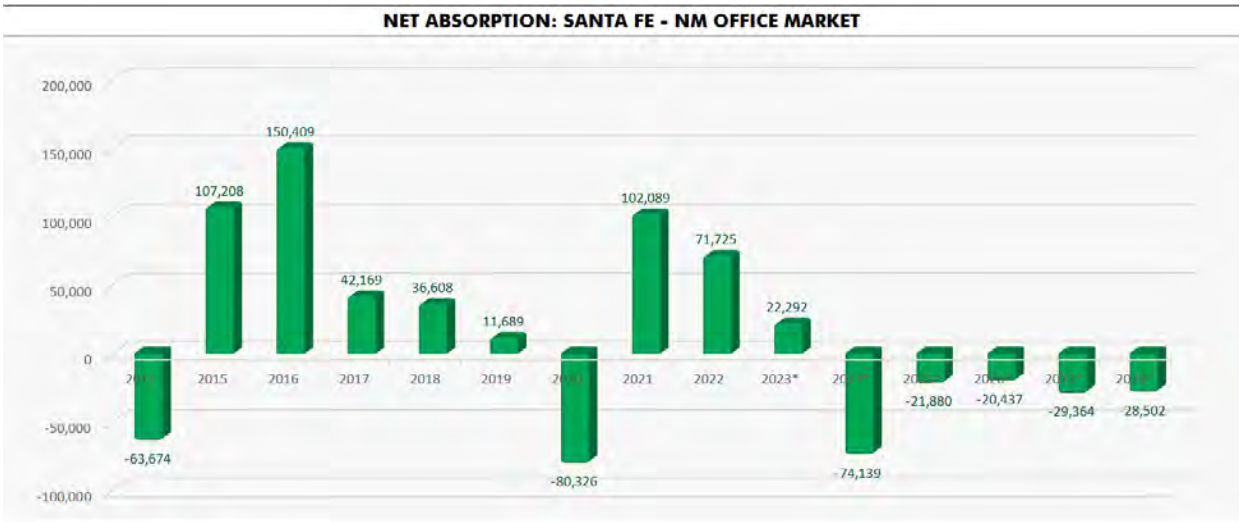

* Future Projected Data according to CoStar

Source: CoStar, 3rd Quarter 2023

At the end of the current year, the area is projected to experience positive 22,292 square feet of net absorption, which indicates a decline from the positive 71,725 square feet of net absorption for the previous year. The area is projected to experience negative 74,139 square feet of net absorption as of the end of next year, which indicates a decline from the current year.

Historical Completions - Market

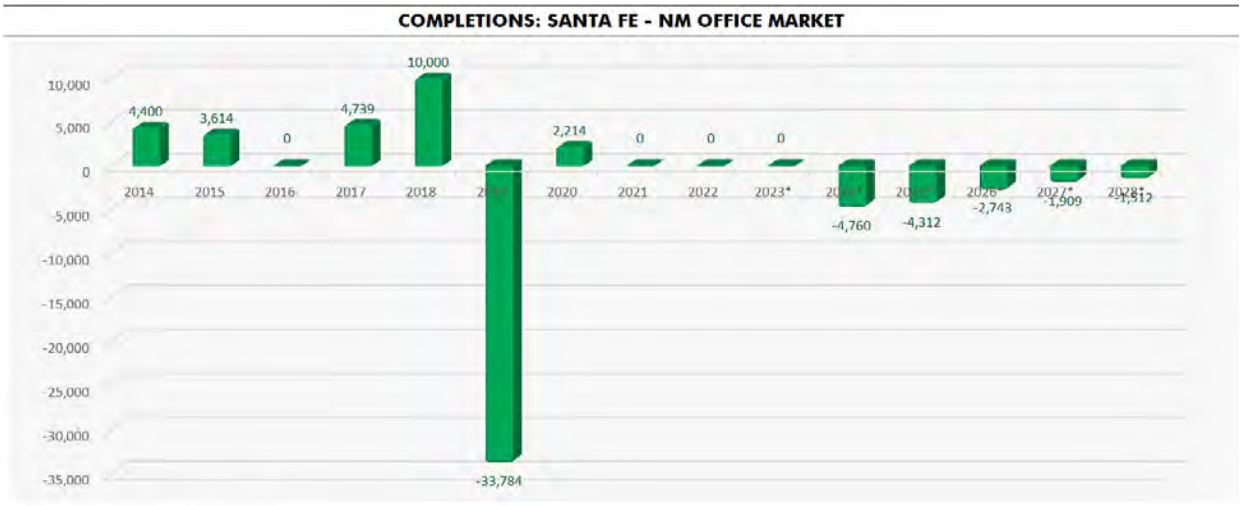

* Future Projected Data according to CoStar

Source: CoStar, 3rd Quarter 2023

The area is projected to achieve zero completions for the current year, which is unchanged from the previous year's zero completions. The area is projected to experience completions of negative 4,760 square feet as of the end of next year, which indicates a decline from the current year.

© 2024 CBRE, Inc.

Historical Asking Rent - Market

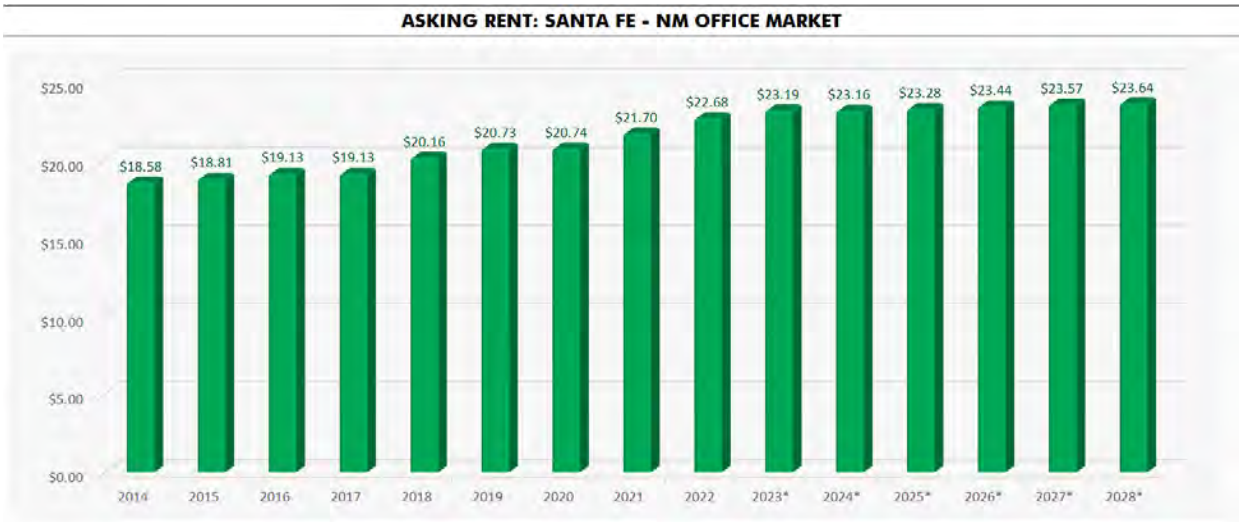

The area is projected to achieve average asking rent of $23.19 per square foot at the end of the current year, which indicates an increase from the previous year's asking rent of $22.68 per square foot. The area is projected to achieve asking rent of $23.16 per square foot by the end of next year, indicating a small decrease from the current year.

Occupancy

Based on the foregoing analysis, CBRE, Inc.'s conclusion of stabilized occupancy for the subject is illustrated in the following table. Because of its location, its age and condition, mixed use and specialized buildout, it is likely that the stabilized occupancy of the property will be lower than typical for the market.

OCCUPANCY CONCLUSIONS	
Santa Fe - NM Market	96.3%
Rent Comparables	88.5%
Subject's Stabilized Occupancy	85.0%
Compiled by CBRE	

© 2024 CBRE, Inc.

Highest and Best Use

In appraisal practice, the concept of highest and best use represents the premise upon which value is based. The four criteria the highest and best use must meet are:

- legally permissible;
- physically possible;
- financially feasible; and
- maximally productive.

The highest and best use analysis of the subject is discussed below.

AS VACANT

Legal Permissibility

The legally permissible uses were discussed in the Site Analysis and Zoning Sections.

Physical Possibility

The subject will require additional site work to upgrade its utilities, and has an adequate shape and size, sufficient access, etc., to be a separately developable site. There are no known physical reasons why the subject site would not support any legally probable development (i.e. it appears adequate for development).

Financial Feasibility

Potential uses of the site include commercial, office, and production of film. The determination of financial feasibility is dependent primarily on the relationship of supply and demand for the legally probable land uses versus the cost to create the uses. As discussed in the market analysis, the subject office market is generally stabilized.

New office projects have not been recently developed in this market due to economic conditions. Further, there are proposed developments which are no longer moving forward due to inadequate construction financing and market conditions (increasing vacancy, declining effective rental rates, higher cap rates, etc.). Overall, there is significant risk in the office market and most investors would not move forward with new construction at this time on a speculative basis.

Maximum Productivity - Conclusion

The final test of highest and best use of the site as if vacant is that the use be maximally productive, yielding the highest return to the land.

Based on the information presented above and upon information contained in the market and neighborhood analysis, we conclude that the highest and best use of the subject as if vacant would be the development of an office property, or a film production studio or related facility.

As noted, new development is not financially feasible at this time. Therefore, the highest and best use of the site, as vacant, would be to hold for future development when economic conditions improve.

© 2024 CBRE, Inc.

AS IMPROVED

Legal Permissibility

The site has been improved with an office and school campus. This is a nonconforming use for the newly created master plan and zoning.

Physical Possibility

The layout and positioning of the improvements are considered functional for scholastic use, and will need some reconfiguration for office or film use. There is vacant land available for future expansion, but will require review by the City for approval of proposed new uses.

Financial Feasibility

The financial feasibility of an office property is based on the indicated value of the property compared to its land value. If a residual amount exists, then the land is being put to a productive use. Further, the value of the subject property as improved clearly exceeds the underlying land value. However, the analysis of the market indicates that use as an income property is not feasible in the current market.

Maximum Productivity - Conclusion

As shown in the applicable valuation sections, buildings that are similar to the subject have been acquired or continue to be used by office owners. Some of the comparable buildings have been acquired for conversion to an alternative use, similar to the subject. The most likely buyer for the subject property is as follows:

- Investor-Local

Based on the foregoing, the highest and best use of the property, as improved, is consistent with the existing use as a development, related to film production including studio use.

© 2024 CBRE, Inc.

Sales Comparison Approach

The following map and table summarize the comparable data used in the valuation of the subject. A detailed description of each transaction is included in the addenda.

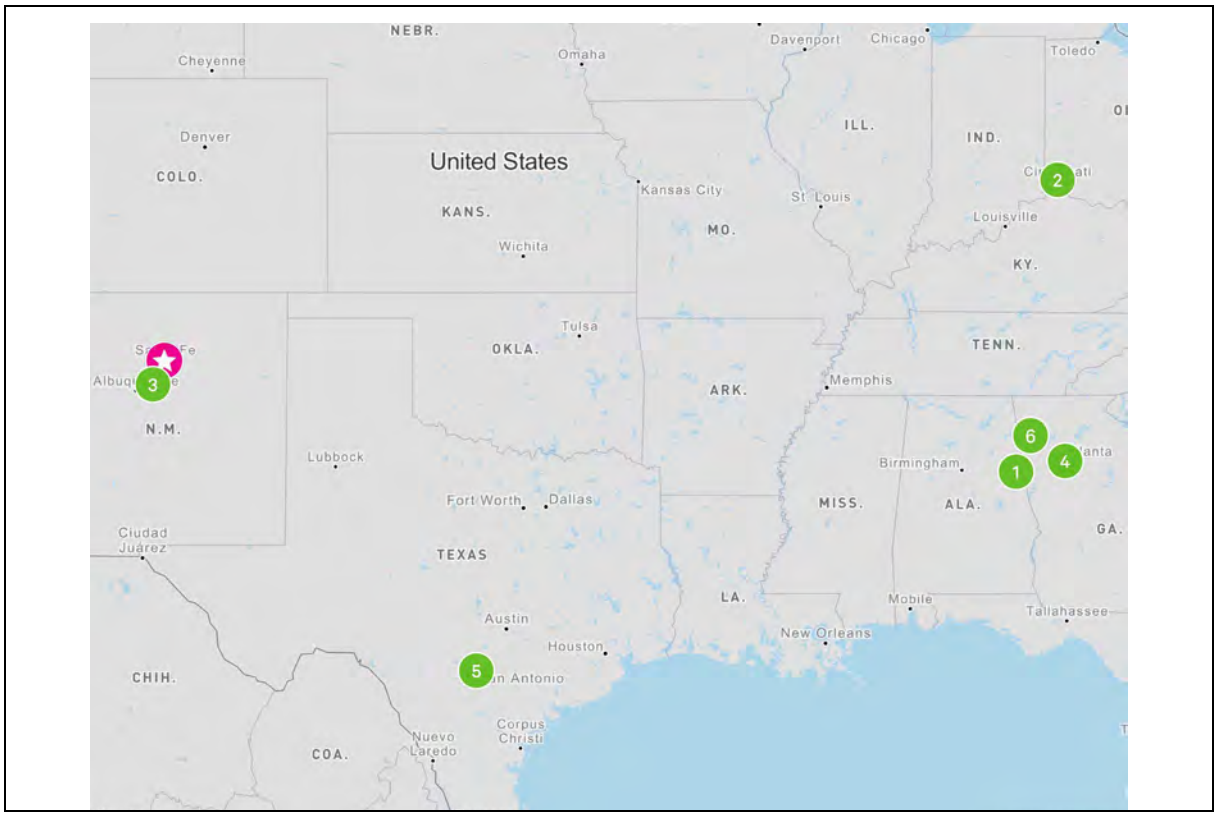

SUMMARY OF COMPARABLE STUDIO AND SCHOOL CAMPUS SALES

No.	Property Name	Transaction Type	Transaction Date	Interest Transferred	YOC / Reno'd	Property Subtype	Site Coverage	NRA (SF)	Actual Sale Price	Adjusted Sale Price [1]	Price Per SF [1]
1	Carrie Steele Pitts Home 577, 585, 667 Fairburn Road NW Atlanta, GA 30331	Sale	Aug-23	Leased Fee	1965	School	13.7%	84,684	$5,200,000	$5,200,000	$61.40
2	Former Mount Auburn International Academy 244 Southern Avenue Cinncinati, OH 45219	Sale	Jun-23	Fee Simple/Freehold	1895	School	88.5%	88,673	$5,000,000	$5,000,000	$56.39
3	Shellaberger Tennis Center / Studio 1600 1/2 St. Michaels Drive Santa Fe, NM 87505	Sale	Oct-22	Fee Simple/Freehold	2002 / 2022	Studio	17.3%	65,000	$6,700,000	$9,200,000	$141.54
4	Blackhall Studios 1415 Constitution Road SE Atlanta, GA 30315	Sale	Apr-21	Mixed Fee/Lease Hold	1987 / 2017	Studio	37.1%	848,239	$120,000,100	$120,000,100	$141.47
5	Charter School Campus 4018 South Presa Street San Antonio, TX 78223	Sale	Mar-21	Fee Simple/Freehold	1921 / 2017	School	22.0%	68,098	$5,750,000	$5,750,000	$84.44
6	Aztec Warrior Studios 1550 Agape Way Decatur, GA 30035	Sale	Jul-19	Fee Simple/Freehold	1993	Studio	5.5%	18,458	$1,562,500	$1,562,500	$84.65
Subj. Pro Forma	Santa Fe College of Arts (portion of) 1600 St Michaels Dr Santa Fe, NM 87505	Under Contract	May-23	---	1968	Single Tenant	8.2%	98,677			

[1] Adjusted sale price for cash equivalency, lease-up and/or deferred maintenance (where applicable)
Compiled by CBRE

© 2024 CBRE, Inc.

The sales utilized represent the best data available for comparison with the subject. They were selected from our research of comparable improved sales on a national basis as there is only one known sale similar to the subject from the Santa Fe area. These sales were chosen based upon mixed use campuses, including film production facilities, as well as educational facilities similar to the subject's original and most recent configuration.

We do not consider it appropriate to value the individual components of the subject property from local sales, and combine the sales comparisons individually to produce an overall value. Refer to USPAP Standard 1-4 (e), which states:

> When analyzing the assemblage of the various estates or component parts of a property, an appraiser must analyze the effect on value, if any, of the assemblage. An appraiser must refrain from valuing the whole solely by adding together the individual values of the various estates or component parts.[9]

Location Adjustments

The following supplemental data was collected in order to provide support for our location adjustments:

IMPROVED SALES LOCATION ADJUSTMENT ANALYSIS

Comparable Number	Subject	1	2	3	4	5	6
Address	1600 St Michaels Dr	577, 585, 667 Fairburn Road NW	244 Southern Avenue	1600 1/2 St. Michaels Drive	1415 Constitution Road SE	4018 South Presa Street	1550 Agape Way
Radius for Demographic Analysis	3 Mile Radius	3 Mile Radius	3 Mile Radius	3 Mile Radius	3 Mile Radius	3 Mile Radius	3 Mile Radius
2023 Households	28,855	23,156	64,911	28,117	20,451	47,214	35,500
2023 Average Household Income	$95,392	$73,839	$82,298	$92,741	$91,549	$59,683	$78,980
AHI Relative to Subject	---	-22.6%	-13.7%	-2.8%	-4.0%	-37.4%	-17.2%
2023 Median Value of Owner Occupied Housing Units	$363,095	$227,397	$245,374	$351,587	$269,151	$133,254	$234,730
2023 % Renter Occupied Housing Units	35.9%	47.2%	55.7%	35.9%	36.4%	42.2%	38.3%
2023 % College/Graduate Degree Age 25+	46.8%	32.5%	45.6%	43.9%	34.0%	13.6%	31.2%
2023 Median Age	46.6	36.2	32.8	45.2	35.7	35.5	38.3
Indicated Qualitative Adjustment	---	**Inferior**	**Inferior**	**Similar**	**Superior**	**Inferior**	**Inferior**
Concluded Quantitative Adjustment	---	*5%*	*10%*	*0%*	*-10%*	*10%*	*5%*

Compiled by CBRE

Of note, the adjustment for Sale 4 is not based on its surrounding demographics, but its ideal location in relation to surrounding film and television studios and its linkages. The indicated adjustments are applied in the following discussions.

DISCUSSION/ANALYSIS OF IMPROVED SALES

Improved Sale One

This comparable represents the sale of the former Carrie Steele Pitts Home campus located at 667 Fairburn Road NW in Atlanta, Georgia. The improvements include a total of 84,684 square feet in 8 buildings situated on a 15.76-gross acre campus. Due to a creek on the property, 14.2 acres are considered usable. The facility includes classrooms, gymnasium, commercial kitchen, cafeteria, offices, indoor pool, athletic field, playground, and 111 parking spaces. The property was listed for $5,000,000 and the broker reported multiple bids which drove up the price. The

[9] The Appraisal Foundation, *USPAP, 2024 Edition (Effective January 1, 2024)*

© 2024 CBRE, Inc.

property was purchased by a non-profit, Partnership for Southern Equity, Inc. for $5,200,000 or $61.40 per square foot in August 2023. The buyer will owner occupy three of the buildings representing 54,816 square feet. A school (Imhotep Academy), which had been leasing space at the property prior to the sale, will continue to lease/operate in four buildings representing 28,794 square feet. The buyer plans to renew the school tenant lease, which is on a month to month basis.

The upward adjustment for location reflects this comparable's inferior feature with respect to inferior demographics which garner lower rental rates. In terms of age/condition, this comparable was judged inferior due to older construction and more long-lived physical deterioration and received an upward adjustment for this characteristic. The adjustment for site coverage was warranted due to less land available for expansion, circulation, parking, or external storage. Therefore, an upward adjustment was judged proper for this comparable. Overall, this comparable was deemed inferior in comparison to the subject and an upward net adjustment was warranted to the sales price indicator.

Improved Sale Two

This comparable represents a 88,673 square foot school facility located in Cincinnati, Ohio. The property was originally built in 1895 and in 2022 was operating as the Mount Auburn International Academy The 88,673 square foot building includes a mix of offices , class rooms, gymnasium, cafeteria, & additional storage/maintenance rooms. The property is currently under contract to be purchased. The property was purchased in June 2023 for $5,000,000 or $56.39 per square foot. The property was purchased for use as the Mount Auburn Preparatory Academy charter school.

The upward adjustment for location reflects this comparable's inferior feature with respect to inferior demographics which garner lower rental rates. In terms of age/condition, this comparable was judged inferior due to older construction and more long-lived physical deterioration and received an upward adjustment for this characteristic. The adjustment for site coverage was warranted due to less land available for expansion, circulation, parking, or external storage. Therefore, an upward adjustment was judged proper for this comparable. With respect to amenities, this comparable was considered inferior in this aspect and received an upward adjustment because of lack of studio, stage, or auditorium facilities. Overall, this comparable was deemed inferior in comparison to the subject and an upward net adjustment was warranted to the sales price indicator.

Improved Sale Three

The former Shellaberger Tennis Center was constructed in 2002 tennis facility as a public tennis club on the College of Santa Fe campus. It has 65,000 square feet of gross building area, initially for indoor tennis use. It was marketed for mixed use, potentially residential or office, and sold in May, 2022, closing in October after the initial offer fell through. The closing price was $6,700,000. The buyer considered multiple reconfigurations, and ultimately repurposed the

© 2024 CBRE, Inc.

facility as a film soundstage/professional office. According to the new owners the facility required $1,500,000 for the soundstages to be retrofitted and soundproofed, as well as an additional $1,000,000 is needed for electrical upgrades. It has a low land-to-building ratio of 17%, indicating some potential surplus land available for expansion or exterior storage.

In terms of age/condition, this comparable was judged superior due to newer construction and received a downward adjustment for this characteristic. The adjustment for site coverage was warranted due to less land available for expansion, circulation, parking, or external storage. Therefore, an upward adjustment was judged proper for this comparable. With respect to amenities, this comparable was considered superior in this aspect and received a downward adjustment because of superior potential for film production. Overall, this comparable was deemed superior in comparison to the subject and a downward net adjustment was warranted to the sales price indicator.

Improved Sale Four

This comparable represents the sale of Blackhall Studios, a movie and film production studio located on two adjacent campuses in southeast Atlanta. The Main Campus is an approximate 411,532-square-foot, state-of-the-art movie and film production studio with nine sound stages and a centralized office, warehouse, and millwork facility, as well as individual office bungalows. These buildings were built in 2017-2018 and are located at 1415 Constitution Road SE. The East Campus, including The Grove, is an approximate 436,707-square-foot, movie and film production studio divided into multiple sound stages, office, and millwork uses. The buildings were constructed in 1987, and renovated, opening in 2017 and 2018. This property is located at 3475, 3495, and 3342 International Park Drive SE. Blackhall has been home to productions for Disney, Warner Brothers, and Universal Studios, as well as Netflix. . Blackhall Studios was sold to Los Angeles based private equity firm Commonwealth Group for a reported price of $120 million. The transaction was structured as an "Asset Purchase Agreement" and included both real property and assignment of leases for buildings and property comprising the East Campus (including The Grove), as well as furnishings and equipment, and assumption of certain liabilities. A detailed allocation was not available, though the recorded price for the fee simple interest transferred was $100 million. The pro forma shown is the seller's operating budget for 2021. It is generally supported by actual 2019 operations, allowing for additional operations. In 2020, revenue was significantly negatively impacted by the COVID-19 pandemic. However, commitments for 2021 had the studio operating at near-full capacity.

The downward adjustment for superior property rights conveyed is attributable to existing leases in place. The downward adjustment for location reflects this comparable's superior feature with respect to superior demographics which garner higher rental rates. Upon comparison with the subject, this comparable was considered inferior in terms of size and received an upward adjustment for this characteristic due to having significantly more square footage than the subject property. In terms of age/condition, this comparable was judged superior due to newer

© 2024 CBRE, Inc.

construction and received a downward adjustment for this characteristic. The adjustment for site coverage was warranted due to less land available for expansion, circulation, parking, or external storage. Therefore, an upward adjustment was judged proper for this comparable. With respect to amenities, this comparable was considered superior in this aspect and received a downward adjustment because of multiple studios for film production. Overall, this comparable was deemed superior in comparison to the subject and a downward net adjustment was warranted to the sales price indicator.

Improved Sale Five

This comparable represents the sale of a 68,098-square foot charter school located at 4018 South Presa Street in San Antonio, Texas. The improvements were originally constructed in 1921, renovated in 2013 and 2017, and are situated on a 7.10-acre site. Amenities include a full kitchen/cafeteria, basketball pavilion and athletic field. The property is presently owner-occupied by New Frontiers Public Schools and operated as the Frank L. Madla Accredited Collegiate Academy. It sold in March 2021 for $5,750,000, or $84.44 per square-foot.

The upward adjustment for location reflects this comparable's inferior feature with respect to inferior demographics which garner lower rental rates. The adjustment for site coverage was warranted due to less land available for expansion, circulation, parking, or external storage. Therefore, an upward adjustment was judged proper for this comparable. Overall, this comparable was deemed inferior in comparison to the subject and an upward net adjustment was warranted to the sales price indicator.

Improved Sale Six

This 18,458 square foot building is located at 1550 Agape Way in Decatur, GA. The improvements were constructed in 1993 and are situated on a 7.70 acre site. The improvements are tilt-up concreate exterior with a brick façade along the front of the building. The property was sold from Trinity Christian Center of Santa Ana who had their broadcasting network at this location, to ADA 108 LLC. The buyer purchased the property as a film production studio. The property is now known as the Aztec Warrior Studios. The property sold for $1,562,500 or $84.65 in July 2019.

The upward adjustment for location reflects this comparable's inferior feature with respect to inferior demographics which garner lower rental rates. Upon comparison with the subject, this comparable was considered superior in terms of size and received a downward adjustment for this characteristic due to having significantly fewer square feet than the subject property. With respect to amenities, this comparable was considered inferior in this aspect and received an upward adjustment because of inferior studio capacity. Overall, this comparable was deemed inferior in comparison to the subject and an upward net adjustment was warranted to the sales price indicator.

© 2024 CBRE, Inc.

SUMMARY OF ADJUSTMENTS

Based on our comparative analysis, the following chart summarizes the adjustments warranted to each comparable.

STUDIO AND SCHOOL CAMPUS SALES ADJUSTMENT GRID

Comparable Number	1	2	3	4	5	6	Subj. Pro Forma
Transaction Type	Sale	Sale	Sale	Sale	Sale	Sale	---
Transaction Date	Aug-23	Jun-23	Oct-22	Apr-21	Mar-21	Jul-19	---
Interest Transferred	Leased Fee	Fee	Fee	Mixed	Fee	Fee	---
Year Built/Renovated	1965	1895	2002 / 2022	1987 / 2017	1921 / 2017	1993	1968
Property Subtype	School	School	Studio	Studio	School	Studio	Single Tenant
GBA (SF)	84,684	88,673	65,000	848,239	68,098	18,458	98,677
Site Coverage	13.7%	88.5%	17.3%	37.1%	22.0%	5.5%	8.2%
GLA (SF)	84,684	88,673	65,000	848,239	68,098	18,458	98,677
Actual Sale Price	$5,200,000	$5,000,000	$6,700,000	$120,000,100	$5,750,000	$1,562,500	---
Adjusted Sale Price [1]	$5,200,000	$5,000,000	$9,200,000	$120,000,100	$5,750,000	$1,562,500	---
Adj. Price Per SF	$61.40	$56.39	$141.54	$141.47	$84.44	$84.65	
Property Rights Conveyed	0%	0%	0%	-20%	0%	0%	
Financing Terms [1]	0%	0%	0%	0%	0%	0%	
Conditions of Sale	0%	0%	0%	0%	0%	0%	
Market Conditions (Time)	0%	0%	0%	0%	0%	0%	
Subtotal - Price Per SF	$61.40	$56.39	$141.54	$113.18	$84.44	$84.65	
Location	5%	10%	0%	-10%	10%	5%	
Size	0%	0%	0%	10%	0%	-10%	
Age/Condition	25%	25%	-20%	-10%	0%	0%	
Quality of Construction	0%	0%	0%	0%	0%	0%	
Parking	0%	0%	0%	0%	0%	0%	
Site Coverage	10%	20%	15%	25%	25%	0%	
Amenities	10%	10%	-10%	-10%	10%	10%	
Other	0%	0%	0%	0%	0%	0%	
Total Other Adjustments	50%	65%	-15%	5%	45%	5%	
Indicated Value Per SF	**$92.10**	**$93.04**	**$120.31**	**$118.83**	**$122.44**	**$88.88**	
Absolute Adjustment	*50%*	*65%*	*45%*	*85%*	*45%*	*25%*	

[1] Adjusted for cash equivalency, lease-up and/or deferred maintenance (where applicable)
Compiled by CBRE

SALE PRICE PER SQUARE FOOT CONCLUSION

Overall, Comparables 3, 5 and 6 were given greater consideration because they required least overall adjustment. Comparable 3 is given greatest weight as it is adjacent to the subject property, a portion of the same campus, and is the only known recent sale of a film studio property from New Mexico. The following chart presents the valuation conclusion:

SALES COMPARISON APPROACH

NRA (SF)	X	Value Per SF	=	Value
98,677	X	$88.88	=	$8,770,658
98,677	X	$120.31	=	$11,871,602

VALUE CONCLUSION	
As Complete Market Value	$11,500,000
Deferred Maintenance	(6,314,633)
As Is Market Value	$5,185,368
Rounded	**$5,200,000**
Value Per SF	**$52.70**

Compiled by CBRE

© 2024 CBRE, Inc.

Income Capitalization Approach

The following map and table summarize the primary comparable data used in the valuation of the subject. A detailed description of each transaction is included in the addenda.

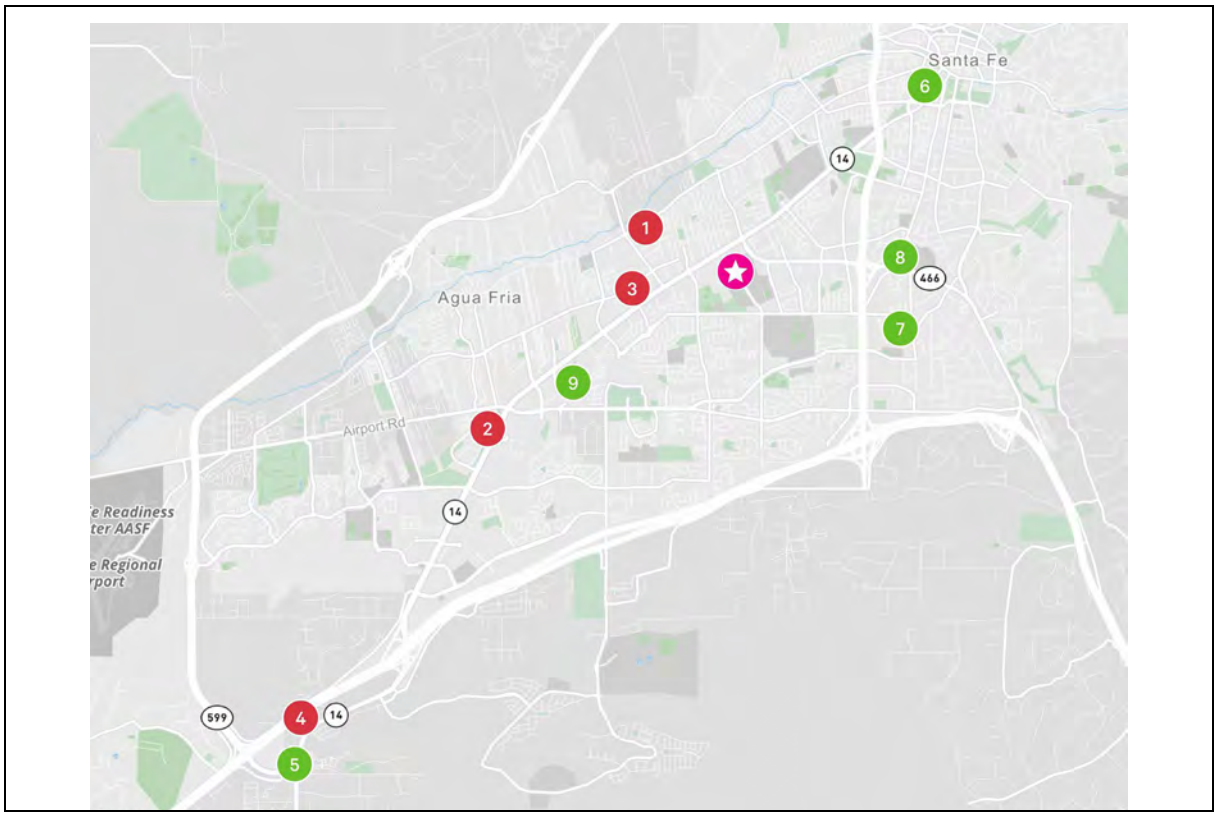

SUMMARY OF COMPARABLE INDUSTRIAL RENTALS

No.	Property Name and Location	YOC / Reno'd	Property Subtype	Occ.	Distance from Subj	NRA (SF)	Tenant Name	Lease Area (SF)	Lease Date	Lease Term	Base Rent	Reimbursements
1	1000 Siler Park Ln 1000 Siler Park Ln Santa Fe, NM 87507	1980	WH / Distribution / Logistics	100%	1.0 Miles	53,668	Hajoca	53,688	Nov-22	6.0 Yrs.	$6.13 PSF	NNN
2	2516 Camino Entrada Santa Fe, NM 87507	2002	WH / Distribution / Logistics	100%	2.8 Miles	13,220	Amazon	13,200	Apr-21	5.0 Yrs.	$12.00 PSF	NNN
3	Second Street Brewery 2920 Rufina Street Santa Fe, NM 87507	1971	WH / Distribution / Logistics	100%	1.0 Miles	20,000	Second Street Brewery	20,000	Jun-21	5.0 Yrs.	$6.75 PSF	NNN
4	4525 Hwy 14 Rd - Building 2 Santa Fe, NM 87507		WH / Distribution / Logistics	100%	6.0 Miles	10,000	Bimbo Bakeries	10,000	Nov-18	5.0 Yrs.	$10.00 PSF	Modified Gross
Subj.	Santa Fe College of Arts (portion of) 1600 St Michaels Dr	1968	Office	0%	---	98,677					---	---

Compiled by CBRE

© 2024 CBRE, Inc.

SUMMARY OF COMPARABLE OFFICE RENTALS

Comp. No.	Property Name and Location	YOC / Reno'd	Property Subtype	Distance from Subj	NRA (SF)	Tenant Name	Lease Area (SF)	Lease Date	Lease Term	Base Rent	Reimbursements	Escalations
5	US Forest Services Office building 11 Forest Lane Santa Fe, NM 87508	2009	Single Tenant	6.4 Miles	23,000	USDA Forest Service	23,000	Sep-19	5.0 Yrs.	$22.33 PSF	Full Service	
6	University Plaza 330 Garfield Street Santa Fe, NM 87501	1881 / 2018	Multi Tenant	2.6 Miles	20,595	Fidelity Title Hunter Custom Homes	3,104 2,078	Aug-23 May-23	3.0 Yrs. 3.0 Yrs.	$23.70 PSF $28.00 PSF	Gross Gross	Flat Flat
7	Butolph Office Park 400 Kiva Court NE Santa Fe, NM 87505	2013	Office Park	1.7 Miles	10,799	Gallagher Insurance Sun Mountain Wellness	1,325 1,800	Mar-23 Dec-22	3.0 Yrs. 3.0 Yrs.	$18.11 PSF $24.00 PSF	Modified Gross Modified Gross	3% annual 3% annual increases
8	Galisteo Professional Office Park Condos 531 Harkle Unit A	1988	Office Condominium	1.6 Miles	2,469	Family Medicine	2,469	Oct-23	3.0 Yrs.	$19.00 PSF	Modified Gross	3% annually
9	The Lofts 3600 Cerrillos Road, Building 700 Santa Fe, NM 87507	2002	Other	1.9 Miles	24,273	Functional Medicine Sungreen Cleaner (Noel Lopez)	1,195 1,100	Sep-22 Feb-22	1.9 Yrs. 0.9 Yrs.	$19.83 PSF $18.00 PSF	Modified Gross Modified Gross	
Subj.	Santa Fe College of Arts (portion of) 1600 St Michaels Dr Santa Fe, NM 87505	1968			98,677					---		

Compiled by CBRE

The rentals utilized represent the best data available for comparison with the subject. They were selected from our research within the greater Santa Fe area, recent leases of industrial and office spaces comparable to the subject. The following table shows a summary of the space allocation for the subject.

MARKET RENT CATEGORIES

Space Allocation	Size
Industrial Space	11,200
Office Space	87,477

Compiled by CBRE

NATIONAL STUDIO SPACE RENT COMPARABLES

CBRE has compiled national rentals for film and television studios showing the space can rent from $25 to $115 per square foot. The wide range in rent for the comparables is mostly attributable to the composition of stage vs office/support space for each comparable. Rents tend to trend at the top range of office rents for the locality. The subject has good linkages, and is operated by a reputable company within the competitive market. However, its studio space is limited, and the size of sound stages available are smaller than typically desired for larger production studio operators. In conclusion, we estimate a stage rent for the subject consistent with the rate indicated by the comparable office spaces.

DISCUSSION/ANALYSIS OF RENT COMPARABLES

Rent Comparable One

This is a 53,668-square foot industrial (warehouse/distribution) facility located at 1000 Siler Park Ln in Santa Fe, New Mexico. The improvements were constructed in 1980 and are. situated on a 4.65-acre site. The clear height of the improvements is 20' and the office finish approximates 33.5%. The property has been leased by HAJOCA, which has been in this location since 1989,

© 2024 CBRE, Inc.

most recently extended in November, 2022, for a six year term, with a rent currently at $6.13 per square foot, or $328,755 annually.

Rent Comparable Two

This building is on Camino Entrada, just off of Cerrillos Road. It was formerly occupied by United Rentals, as well as Santa Fe Autoworks. It was placed on the market for $12.00 psf NNN in late 2021, and leased in April, 2022. The tenant was not disclosed, nor the lease amount, but market participants believe it is Amazon, being used as a last mile warehouse, and the lease signing was at or near list.

Rent Comparable Three

This comparable represents the renewal lease of a warehouse in the Siler Road industrial area of Santa Fe, NM, which was converted into a brewery and tap room for Second Street Brewery. This property is located just around the corner from the Meow Wolf art complex, a popular tourist attraction. This property had previously been utilized as a mattress warehouse and had minimal office buildout or yard area. This property was purchased by a local broker/investor in February 2015 for $1,000,000 who immediately started marketing it for lease. Second Street Brewery signed a 5-year NNN lease in approximately June 2016 at $120,000 per year, or $6.00 per square foot. This lease did not include any TI allowance and the brewery spent an estimated $1,000,000 on renovations to transform the property into a brewery and tap room. Approximately half of this was for real estate to include an HVAC system, new restrooms, upgraded electrical system, new trench drains, landscaping, and exterior improvements. The remainder represented equipment costs for a 20-barrel brewing system. The lease includes three 5-year renewal options with CPI escalations every three years throughout the initial and renewal terms.

Rent Comparable Four

This rental survey represents the direct lease for 4525 Hwy 14 Rd, Building 2 in Santa Fe County, Santa Fe New Mexico. This is an industrial property type with a single tenancy with a rentable area of 10,000 SF on 0.46 acres of land. This property was on the market for 5 months and was occupied in November of 2018. The reimbursements are on a modified gross basis and the lease is reported to be a 5 year term, occupied by Bimbo Bakeries.

Rent Comparable Five

This is a 23,000-square foot, one-story, suburban office building located at 11 Forest Lane in Santa Fe, New Mexico. The improvements were constructed in 2009 and are situated on a 5.00-acre site. Currently, the property is 100.0% occupied by the United States Department of Agriculture, Forest Service Division. An original 10-year, firm lease term commenced September 17, 2009. Base rent during the original term was flat at $676,890 per year, or approximately $29.43 per square foot, inclusive of amortized tenant improvements, with CPI adjustments to operating expenses of $4.13 per square foot. The lease included two, five-year options to renew

© 2024 CBRE, Inc.

at $520,950 per year, or approximately $22.65 per square foot, prior to CPI adjustments for operating expenses. The GSA tenant, in a letter dated March 12, 2019, indicated its intention of exercising the first, five-year renewal option. Based on executed Lease Amendment No. PLA047, signed December 16, 2019, the total annual rent for the first option period has been negotiated to $513,570.34 annually, equivalent to $22.33 per square foot, including a base rent of $18.52 per square foot, and CPI adjusted operating expenses of $3.81 per square foot.

Rent Comparable Six

This comparable represents a 20,595-square-foot, Class C multi-tenant office property at 330 Garfield Street, Santa Fe, NM. The 4-story improvements were originally constructed in 1881 and were considered in average condition at the time of our research. The property is currently 94% leased. The most recent leases signed in 2023 are gross leases at $23.70 and $28.00 per square foot, both 36 month leases to new tenants.

Rent Comparable Seven

This comparable represents a 10,799-square-foot, Class office park office property at 400 Kiva Court NE, Santa Fe, NM. The improvements were originally constructed in 2013 and were considered in condition at the time of our research. The property is currently 100% leased. Tenants pays flat rate plus utilities. The most recent leases in the complex range from $18.11 to $24.00 per square foot for new tenants.

Rent Comparable Eight

This comparable represents a 2,469-square-foot, Class B office condominium office property at 531 Harkle, Santa Fe, NM. The 1-story improvements were originally constructed in 1988 and were considered in condition at the time of our research. This is a single-tenant unit, leased to Family Medicine starting in October 2023, at $19.00 per square foot on a modified gross basis.

Rent Comparable Nine

This comparable represents a 24,273-square-foot, Class C+ other office property at 3600 Cerrillos Road, Building 700, Santa Fe, NM. The 3-story improvements were originally constructed in 2002 and were considered in average condition at the time of our research. This is a mixed-use development, consisting of 22 office suites and 18 residential units. The offices are typically small executive units from 150-300 square feet, with one larger tenant occupying 2,290 square feet. The apartments range from 440 square foot efficiency units to 1,400 square foot lofts, averaging 1,000 square feet, typically one-bedroom, all one-bath. Occupancy has ranged from 90% to 97% over the last two years, averaging roughly 90%. Most office spaces are leased from 12 to 36 months, while the residential units are commonly on 6 to 12 month leases. Roughly 50% of the tenants have been in place for 3 or more years. The improvements are in generally good condition, with no deferred maintenance.

© 2024 CBRE, Inc.

MARKET RENT ANALYSIS

Local industrial space is typically rented on a NNN basis, with comparables ranging from $6.13 to $12.00 per square foot. The range in recent office leases is from $18.00 to $28.00 per square foot, typically on a gross or modified gross basis. The subject compares with the upper portion of the industrial range due to its locational and physical characteristics. The office space is most comparable to the lower portion of the indicated range in the market, primarily attributable to age and condition, as well as the classroom configuration.

MARKET RENT CONCLUSIONS

The following chart shows the market rent conclusions for the subject:

MARKET RENT CONCLUSIONS

Category	Industrial Space	Office Space
Net Rentable Area (SF)	11,200	87,477
Percent of Total SF	11.4%	88.6%
Market Rent ($/SF/Yr.)	$12.00	$19.00
Weighted Average In-place Rent	$0.00	$0.00
Concessions (New Tenants)	2 Months	2 Months
Concessions (Renewals)	0 Months	0 Months
Reimbursements	NNN	Gross
Escalations	2%	2%
Tenant Improvements (New Tenants)	$2.00	$40.00
Tenant Improvements (Renewals)	$0.00	$10.00
Average Lease Term	60 Months	60 Months
Leasing Commissions (New Tenants)	6.00%	6.00%
Leasing Commissions (Renewals)	3.00%	3.00%

Compiled by CBRE

RENT ROLL ANALYSIS

The subject's rent roll is illustrated as follows:

RENT ROLL ANALYSIS FOR SANTA FE COLLEGE OF ARTS (PORTION OF)

Suite No.	Tenant	Tenant Type	Lease Start	Lease Expiration	Term (Mos.)	Size (NRA) SF	% Total	Market Rent $/SF/Yr.	Market Rent $/Yr.	Market Expense Basis	Vacant at Market $/SF/Yr.	Vacant at Market $/Yr.
	Owner-Occupied	Office Space	---	---	---	87,477	88.6%	$19.00	$1,662,063	Gross	---	$1,662,063
	Owner-Occupied	Industrial Space	---	---	---	11,200	11.4%	$12.00	$134,400	NNN	---	$134,400
Vacant Subtotals						98,677	100.0%		$1,796,463		---	$1,796,463
Property Totals - Contract Rent						98,677	100.0%				$18.21	$1,796,463
Property Totals - Market Rent						98,677	100.0%	$18.21	$1,796,463		$18.21	

Compiled by CBRE

OPERATING EXPENSE ANALYSIS

Expense Comparables

The following chart summarizes expenses obtained from recognized industry publications and/or comparable properties. The subject expenses are concluded within the range indicated by the comparables, generally near the upper portion of the range.

© 2024 CBRE, Inc.

EXPENSE COMPARABLES

Comparable Number	1	2	3	4	Subject
Location	Central NM	Central NM	Northern NM	Northern NM	Santa Fe, NM
NRA (SF)	145,763	113,698	105,722	31,880	98,677
Year Built	1972	1954	1985	2009	1968
Type	Office Park	Multi Tenant	Multi Tenant	Multi Tenant	Single Tenant
Period	2022	2022	2023	2022	Pro Forma
Revenues	$/SF	$/SF	$/SF	$/SF	$/SF
Potential Rental Income	$22.85	$13.66	$20.00	$19.87	$18.21
Vacancy & Credit Loss	$0.00	$0.00	$0.00	$0.00	($2.73)
Net Rental Income	**$22.85**	**$13.66**	**$20.00**	**$19.87**	**$15.47**
Expense Reimbursements	$0.00	$0.00	$0.21	$1.94	$1.87
Vacancy & Credit Loss	$0.00	$0.00	$0.00	$0.00	$0.00
Subtotal Effective Other Income	**$0.00**	**$0.00**	**$0.21**	**$1.94**	**$1.87**
Effective Gross Income	**$22.85**	**$13.66**	**$20.89**	**$21.81**	**$17.35**
Expenses					
Real Estate Taxes	$1.58	$0.71	$0.58	$1.63	$1.60
Property Insurance	$0.18	$0.12	$0.18	$0.18	$0.15
Common Area Maintenance	$8.40	$4.38	$2.97	$4.88	$4.00
Janitorial	$0.90	$0.52	$0.73	$0.77	$0.75
Management Fee	$0.91	$0.18	$0.77	$1.32	$0.69
Total Operating Expenses	**$11.98**	**$5.91**	**$5.23**	**$8.78**	**$7.20**
Operating Expenses Excluding Taxes	$10.40	$5.20	$4.65	$7.15	$5.59
Operating Expense Ratio	52.4%	43.3%	25.0%	40.2%	41.5%
Management Fee (% of EGI)	*4.0%*	*1.3%*	*3.7%*	*6.0%*	*4.0%*

[2] The median total differs from the sum of the individual amounts.

Compiled by CBRE

OPERATING EXPENSE CONCLUSION

The comparable data and projections for the subject are summarized as follows:

TOTAL OPERATING EXPENSES

Year	Total	$/SF/Yr
Expense Comparable 1	---	$11.98
Expense Comparable 2	---	$5.91
Expense Comparable 3	---	$5.23
Expense Comparable 4	---	$8.78
CBRE Estimate	**$710,297**	**$7.20**

Compiled by CBRE

We have concluded $9.51 per square foot for the subject's total operating expenses, which is within the range of the expense comparables.

DIRECT CAPITALIZATION

Direct capitalization is a method used to convert a single year's estimated stabilized net operating income into a value indication. The following subsections represent different techniques for deriving an overall capitalization rate.

© 2024 CBRE, Inc.

Comparable Sales

Only one income property was used in the sales comparison approach; the rest were owner-occupied. For this reason, additional sales of investment properties were selected from the market, from which applicable capitalization rates (OARs) could be confirmed.

COMPARABLE CAPITALIZATION RATES

Sale	Sale Date	Sale Price $/SF	Occupancy	Buyer's Primary Analysis	Operating Expense Ratio	OAR
4	Apr-21	$141.47	80%	Pro Forma (Stabilized)	41.59	9.13%
Indicated OAR:			85%			**9.13%-9.13%**

Compiled by CBRE

COMPARABLE CAPITALIZATION RATES

Secondary Sale	Sale Date	Sale Price $/SF	Occupancy	Buyer's Primary Analysis	Operating Expense Ratio	OAR
7	Dec-23	$70.85	100%	Trailing Actuals	38.55	8.13%
8	Nov-22	$96.02	94%	Trailing Actuals	n/a	9.27%
9	Sep-22	$188.85	100%	Trailing Actuals	n/a	7.99%
10	Jan-22	$67.33	91%	Pro Forma (Stabilized)	53.42	9.75%
11	Jan-22	$230.13	100%	Trailing Actuals	n/a	8.50%
12	Sep-21	$72.73	83%	Trailing Actuals	46.59	10.53%
13	Apr-21	$117.05	79%	Pro Forma (Stabilized)	37.08	9.52%
Indicated OAR:			85%			**7.99%-10.53%**

Compiled by CBRE

The overall capitalization rates for these sales were derived based upon the actual or pro-forma income characteristics of the property. Primary emphasis has been placed upon the more recent data, which is generally reflective of current market trends, interest rates, and buyer's expectations and motivation in the market. Each of these sales shows a similar tenancy structure with regard to stability and credit rating, whereby little if any adjustments are required when compared with the subject.

Published Investor Surveys

The results of the most recent investor surveys are summarized in the following chart.

© 2024 CBRE, Inc.

OVERALL CAPITALIZATION RATES		
Investment Type	OAR Range	Average
CBRE Suburban Office		
Class A	6.84% - 7.72%	7.00%
Class B	8.07% - 8.61%	8.21%
Class C	9.39% - 10.03%	9.62%
RealtyRates.com		
Office	5.11% - 12.93%	9.53%
CBD Office	6.02% - 12.93%	9.76%
Suburban	5.11% - 11.67%	8.85%
PwC Suburban Office		
National Data	4.25% - 7.75%	6.00%
Indicated OAR:		**8.01 - 9.53%**
Compiled by CBRE		

Market Participants

The results of recent interviews with knowledgeable real estate professionals are summarized in the following table.

OVERALL CAPITALIZATION RATES				
Respondent	Company	OAR	Income	Date of Survey
Confidential	CBRE	8% - 9%	Pro Forma	Jan-24
Confidential	Colliers	9.0%	Pro Forma	Jan-24
Indicated OAR:				**8.0% - 9.0%**
Compiled by CBRE				

Band of Investment

The band of investment technique has been utilized as a crosscheck to the foregoing techniques. The Mortgage Interest Rate and the Equity Dividend Rate (EDR) are based upon current market yields for similar investments. The analysis is shown in the following table.

BAND OF INVESTMENT					
Mortgage Interest Rate	6.75%				
Mortgage Term (Amortization Period)	25 Years				
Mortgage Ratio (Loan-to-Value)	70%				
Mortgage Constant (monthly payments)	0.08291				
Equity Dividend Rate (EDR)	12.00%				
Mortgage Requirement	70%	x	0.08291	=	0.05804
Equity Requirement	30%	x	0.12000	=	0.03600
	100%				0.09404
Indicated OAR:					**9.40%**
Compiled by CBRE					

© 2024 CBRE, Inc.

Capitalization Rate Conclusion

The following chart summarizes the OAR conclusions.

OVERALL CAPITALIZATION RATE - CONCLUSION	
Source	Indicated OAR
Comparable Sales	9.13%-9.13%
Comparable Sales (Secondary)	7.99%-10.53%
Published Surveys	8.01 - 9.53%
Market Participants	8.0% - 9.0%
Band of Investment	9.40%
CBRE Estimate	**9.00%**
Compiled by CBRE	

We have also considered recent events and prevailing market conditions with respect to capitalization rates. This includes a combination of inflationary pressures, higher cost of capital (considering interest rates as well as risk spreads), and the recent geopolitical events. While the overall long-term outlook for commercial real estate remains positive, the full effect of these factors may not yet be reflected in transactional data. Overall, we view uncertainty and the higher cost of capital to have an upward influence on capitalization rates which is considered with respect to our conclusion herein.

© 2024 CBRE, Inc.

Direct Capitalization Summary

A summary of the direct capitalization is illustrated in the following chart.

DIRECT CAPITALIZATION SUMMARY

		$/SF/Yr	Total
Income			
Potential Rental Income		$18.21	$1,796,463
Vacancy & Credit Loss	15.00%	(2.73)	(269,469)
Net Rental Income		**$15.47**	**$1,526,994**
Expense Reimbursements		1.87	184,560
Vacancy & Credit Loss	0.00%	0.00	-
Subtotal Effective Other Income		**$1.87**	**$184,560**
Effective Gross Income		**$17.35**	**$1,711,553**
Expenses			
Real Estate Taxes		$1.60	$158,318
Property Insurance		0.15	14,802
Common Area Maintenance		4.00	394,708
Janitorial		0.75	74,008
Management Fee	4.00%	0.69	68,462
Total Operating Expenses		**$7.20**	**$710,297**
Operating Expenses Excluding Taxes		$5.59	$551,979
Operating Expense Ratio			41.50%
Net Operating Income		**$10.15**	**$1,001,256**
OAR		÷	**9.00%**
As Stabilized Value	**November 15, 2023**		**$11,125,072**
Rounded			**$11,100,000**
Deferred Maintenance			(7,176,661)
As Is Value	**November 15, 2023**		**$3,948,411**
Rounded			**$3,900,000**
Value Per SF			**$39.52**

Matrix Analysis	**Cap Rate**	**Value**
	8.75%	$11,400,000
	9.00%	$11,100,000
	9.25%	$10,800,000

Compiled by CBRE

© 2024 CBRE, Inc.

Reconciliation of Value

The value indications from the approaches to value are summarized as follows:

SUMMARY OF VALUE CONCLUSIONS				
Appraisal Premise	As of Date	Sales Comparison Approach	Income Approach	Reconciled Value
As Is	November 15, 2023	$4,800,000	$3,900,000	$4,800,000
Compiled by CBRE				

In the sales comparison approach, the subject is compared to similar properties that have been sold recently or for which listing prices or offers are known. The sales used in this analysis are considered comparable to the subject, and the required adjustments were based on reasonable and well-supported rationale. In addition, market participants are currently analyzing purchase prices on similar properties as they relate to available substitutes in the market. Therefore, the sales comparison approach is considered to provide a reliable value indication, and has been given primary emphasis in the final value reconciliation.

The income capitalization approach is applicable to the subject since it is an income producing property leased in the open market. Market participants are primarily analyzing investment properties based on their income generating capability. Therefore, the income capitalization approach is considered a reasonable and substantiated value indicator, but it has been given secondary emphasis in the final value estimate as our analysis pertains to the Fee Simple interest in the property. Based on this analysis, the income approach does not indicate that the use as an income property is feasible.

Based on the foregoing, the market value of the subject has been concluded as follows:

MARKET VALUE CONCLUSION			
Appraisal Premise	Interest Appraised	Date of Value	Value Conclusion
As Is	Fee Simple Estate	November 15, 2023	$4,800,000
Compiled by CBRE			

© 2024 CBRE, Inc.

Assumptions and Limiting Conditions

1. CBRE, Inc. through its appraiser (collectively, "CBRE") has inspected through reasonable observation the subject property. However, it is not possible or reasonably practicable to personally inspect conditions beneath the soil and the entire interior and exterior of the improvements on the subject property. Therefore, no representation is made as to such matters.
2. The report, including its conclusions and any portion of such report (the "Report"), is as of the date set forth in the letter of transmittal and based upon the information, market, economic, and property conditions and projected levels of operation existing as of such date. The dollar amount of any conclusion as to value in the Report is based upon the purchasing power of the U.S. Dollar on such date. The Report is subject to change as a result of fluctuations in any of the foregoing. CBRE has no obligation to revise the Report to reflect any such fluctuations or other events or conditions which occur subsequent to such date.
3. Unless otherwise expressly noted in the Report, CBRE has assumed that:
   (i) Title to the subject property is clear and marketable and that there are no recorded or unrecorded matters or exceptions to title that would adversely affect marketability or value. CBRE has not examined title records (including without limitation liens, encumbrances, easements, deed restrictions, and other conditions that may affect the title or use of the subject property) and makes no representations regarding title or its limitations on the use of the subject property. Insurance against financial loss that may arise out of defects in title should be sought from a qualified title insurance company.
   (ii) Existing improvements on the subject property conform to applicable local, state, and federal building codes and ordinances, are structurally sound and seismically safe, and have been built and repaired in a workmanlike manner according to standard practices; all building systems (mechanical/electrical, HVAC, elevator, plumbing, etc.) are in good working order with no major deferred maintenance or repair required; and the roof and exterior are in good condition and free from intrusion by the elements. CBRE has not retained independent structural, mechanical, electrical, or civil engineers in connection with this appraisal and, therefore, makes no representations relative to the condition of improvements. CBRE appraisers are not engineers and are not qualified to judge matters of an engineering nature, and furthermore structural problems or building system problems may not be visible. It is expressly assumed that any purchaser would, as a precondition to closing a sale, obtain a satisfactory engineering report relative to the structural integrity of the property and the integrity of building systems.
   (iii) Any proposed improvements, on or off-site, as well as any alterations or repairs considered will be completed in a workmanlike manner according to standard practices.
   (iv) Hazardous materials are not present on the subject property. CBRE is not qualified to detect such substances. The presence of substances such as asbestos, urea formaldehyde foam insulation, contaminated groundwater, mold, or other potentially hazardous materials may affect the value of the property.
   (v) No mineral deposit or subsurface rights of value exist with respect to the subject property, whether gas, liquid, or solid, and no air or development rights of value may be transferred. CBRE has not considered any rights associated with extraction or exploration of any resources, unless otherwise expressly noted in the Report.
   (vi) There are no contemplated public initiatives, governmental development controls, rent controls, or changes in the present zoning ordinances or regulations governing use, density, or shape that would significantly affect the value of the subject property.
   (vii) All required licenses, certificates of occupancy, consents, or other legislative or administrative authority from any local, state, or national government or private entity or organization have been or can be readily obtained or renewed for any use on which the Report is based.
   (viii) The subject property is managed and operated in a prudent and competent manner, neither inefficiently, nor super-efficiently.
   (ix) The subject property and its use, management, and operation are in full compliance with all applicable federal, state, and local regulations, laws, and restrictions, including without limitation environmental laws, seismic hazards, flight patterns, decibel levels/noise envelopes, fire hazards, hillside ordinances, density, allowable uses, building codes, permits, and licenses.
   (x) The subject property is in full compliance with the Americans with Disabilities Act (ADA). CBRE is not qualified to assess the subject property's compliance with the ADA, notwithstanding any discussion of possible readily achievable barrier removal construction items in the Report.

© 2024 CBRE, Inc.

(xi) All information regarding the areas and dimensions of the subject property furnished to CBRE are correct, and no encroachments exist. CBRE has neither undertaken any survey of the boundaries of the subject property, nor reviewed or confirmed the accuracy of any legal description of the subject property.

Unless otherwise expressly noted in the Report, no issues regarding the foregoing were brought to CBRE's attention, and CBRE has no knowledge of any such facts affecting the subject property. If any information inconsistent with any of the foregoing assumptions is discovered, such information could have a substantial negative impact on the Report and any conclusions stated therein. Accordingly, if any such information is subsequently made known to CBRE, CBRE reserves the right to amend the Report, which may include the conclusions of the Report. CBRE assumes no responsibility for any conditions regarding the foregoing, or for any expertise or knowledge required to discover them. Any user of the Report is urged to retain an expert in the applicable field(s) for information regarding such conditions.

4. CBRE has assumed that all documents, data and information furnished by or on behalf of the client, property owner or owner's representative are accurate and correct, unless otherwise expressly noted in the Report. Such data and information include, without limitation, numerical street addresses, lot and block numbers, Assessor's Parcel Numbers, land dimensions, square footage area of the land, dimensions of the improvements, gross building areas, net rentable areas, usable areas, unit count, room count, rent schedules, income data, historical operating expenses, budgets, and related data. Any error in any of the above could have a substantial impact on the Report and any conclusions stated therein. Accordingly, if any such errors are subsequently made known to CBRE, CBRE reserves the right to amend the Report, which may include the conclusions of the Report. The client and intended user should carefully review all assumptions, data, relevant calculations, and conclusions of the Report and should immediately notify CBRE of any questions or errors within 30 days after the date of delivery of the Report.
5. CBRE assumes no responsibility (including any obligation to procure the same) for any documents, data or information not provided to CBRE, including, without limitation, any termite inspection, survey or occupancy permit.
6. All furnishings, equipment and business operations have been disregarded with only real property being considered in the Report, except as otherwise expressly stated and typically considered part of real property.
7. Any cash flows included in the analysis are forecasts of estimated future operating characteristics based upon the information and assumptions contained within the Report. Any projections of income, expenses and economic conditions utilized in the Report, including such cash flows, should be considered as only estimates of the expectations of future income and expenses as of the date of the Report and not predictions of the future. This Report has been prepared in good faith, based on CBRE's current anecdotal and evidence-based views of the commercial real estate market. Although CBRE believes its views reflect market conditions on the date of this Report, they are subject to significant uncertainties and contingencies, many of which are beyond CBRE's control. In addition, many of CBRE's views are opinion and/or projections based on CBRE's subjective analyses of current market circumstances. Actual results are affected by a number of factors outside the control of CBRE, including without limitation fluctuating economic, market, and property conditions. Actual results may ultimately differ from these projections, and CBRE does not warrant any such projections. Further, other firms may have different opinions, projections and analyses, and actual market conditions in the future may cause CBRE's current views to later change or be incorrect. CBRE has no obligation to update its views herein if its opinions, projections, analyses or market circumstances later change.
8. The Report contains professional opinions and is expressly not intended to serve as any warranty, assurance or guarantee of any particular value of the subject property. Other appraisers may reach different conclusions as to the value of the subject property. Furthermore, market value is highly related to exposure time, promotion effort, terms, motivation, and conclusions surrounding the offering of the subject property. The Report is for the sole purpose of providing the intended user with CBRE's independent professional opinion of the value of the subject property as of the date of the Report. Accordingly, CBRE shall not be liable for any losses that arise from any investment or lending decisions based upon the Report that the client, intended user, or any buyer, seller, investor, or lending institution may undertake related to the subject property, and CBRE has not been compensated to assume any of these risks. Nothing contained in the Report shall be construed as any direct or indirect recommendation of CBRE to buy, sell, hold, or finance the subject property.
9. No opinion is expressed on matters which may require legal expertise or specialized investigation or knowledge including, but not limited to, environmental, social, and governance principles ("ESG"), beyond that customarily employed by real estate appraisers. Any user of the Report is advised to retain experts in areas that fall outside the scope of the real estate appraisal profession for such matters.

© 2024 CBRE, Inc.

10. CBRE assumes no responsibility for any costs or consequences arising due to the need, or the lack of need, for flood hazard insurance. An agent for the Federal Flood Insurance Program should be contacted to determine the actual need for Flood Hazard Insurance.
11. Acceptance or use of the Report constitutes full acceptance of these Assumptions and Limiting Conditions and any special assumptions set forth in the Report. It is the responsibility of the user of the Report to read in full, comprehend and thus become aware of all such assumptions and limiting conditions. CBRE assumes no responsibility for any situation arising out of the user's failure to become familiar with and understand the same.
12. The Report applies to the property as a whole only, and any pro ration or division of the title into fractional interests will invalidate such conclusions, unless the Report expressly assumes such pro ration or division of interests.
13. The allocations of the total value estimate in the Report between land and improvements apply only to the existing use of the subject property. The allocations of values for each of the land and improvements are not intended to be used with any other property or appraisal and are not valid for any such use.
14. The maps, plats, sketches, graphs, photographs, and exhibits included in this Report are for illustration purposes only and shall be utilized only to assist in visualizing matters discussed in the Report. No such items shall be removed, reproduced, or used apart from the Report.
15. The Report shall not be duplicated or provided to any unintended users in whole or in part without the written consent of CBRE, which consent CBRE may withhold in its sole discretion. Exempt from this restriction is duplication for the internal use of the intended user and its attorneys, accountants, or advisors for the sole benefit of the intended user. Also exempt from this restriction is transmission of the Report pursuant to any requirement of any court, governmental authority, or regulatory agency having jurisdiction over the intended user, provided that the Report and its contents shall not be published, in whole or in part, in any public document without the written consent of CBRE, which consent CBRE may withhold in its sole discretion. Finally, the Report shall not be made available to the public or otherwise used in any offering of the property or any security, as defined by applicable law. Any unintended user who may possess the Report is advised that it shall not rely upon the Report or its conclusions and that it should rely on its own appraisers, advisors and other consultants for any decision in connection with the subject property. CBRE shall have no liability or responsibility to any such unintended user.

© 2024 CBRE, Inc.

ADDENDA

© 2024 CBRE, Inc.

Addendum A

IMPROVED SALE DATA SHEETS

© 2024 CBRE, Inc.

Sale | Special - School | No. 1

Property Name	Carrie Steele Pitts Home
Address	577, 585, 667 Fairburn Road NW Atlanta, GA 30331
County	Fulton
Govt./Tax ID	Multiple
Net Rentable Area (NRA)	84,684 sf
Condition	Average
Parking Type/ Ratio	Surface/ 1.31:1,000 sf
Floor Count	1
Total # of Units	0 Units
Average Unit Size	N/A
Average Rent/Unit	N/A
Average Rent/SF	N/A
Year Built/Renovated	1965/ N/A
Land Area Net	14.200 ac/ 618,552 sf
Construction Class/ Type	B/ Average
Exterior Finish	Brick
General Amenities	N/A



Transaction Details

Type	Sale	Primary Verification	PSA
Interest Transferred	Leased Fee	Transaction Date	08/04/2023
Condition of Sale	None	Recording Date	N/A
Remaining Lease Term	N/A	Avg. Credit Rating	N/A
Recorded Buyer	Partnership for Southern Equity, Inc.	Sale Price	$5,200,000
Buyer Type	N/A	Financing	Cash to Seller
Recorded Seller	Carrie Steele-Pitts Home	Cash Equivalent	$5,200,000
Marketing Time	4 Month(s)	Capital Adjustment	$0
Listing Broker	N/A	Adjusted Price	$5,200,000
Doc #	67064/644	**Adjusted Price / sf**	**$61.40**
Buyer's Primary Analysis	N/A	Occupancy at Sale	N/A
Static Analysis Method	N/A	Underwritten Occupancy	Static Analysis-N/A
Source	Static Analysis-N/A	Potential Gross Income	Static Analysis-N/A
NOI / sf	Static Analysis-N/A	Vacancy/Collection Loss	Static Analysis-N/A
IRR	N/A	Effective Gross Income	Static Analysis-N/A
OER	Static Analysis-N/A	Expenses	Static Analysis-N/A
Expenses /sf	Static Analysis-N/A	Net Operating Income	Static Analysis-N/A
Cap Rate	Static Analysis-N/A		

Comments

This comparable represents the sale of the former Carrie Steele Pitts Home campus located at 667 Fairburn Road NW in Atlanta, Georgia. The improvements include a total of 84,684 square feet in 8 buildings situated on a 15.76-gross acre campus. Due to a creek on the property, 14.2 acres are considered usable. The facility includes classrooms, gymnasium, commercial kitchen, cafeteria, offices, indoor pool, athletic field, playground, and 111 parking spaces. The property was listed for $5,000,000 and the broker reported multiple bids which drove up the price. The property was purchased by a non-profit, Partnership for Southern Equity, Inc. for $5,200,000 or $61.40 per square foot in August 2023. The buyer will owner occupy three of the buildings representing 54,816 square feet. A school (Imhotep Academy), which had been leasing space at the property prior to the sale, will continue to lease/operate in four buildings representing 28,794 square feet. The buyer plans to renew the school tenant lease, which is on a month to month basis.

Sale | Special - School | No. 2

Property Name	Former Mount Auburn International Academy
Address	244 Southern Avenue Cinncinati, OH 45219
County	Hamilton
Govt./Tax ID	Multiple
Gross Building Area (GBA)	88,673 sf
Condition	Average
Parking Type/ Ratio	Surface/ N/A
Floor Count	4
Total # of Units	1 Unit
Average Unit Size	88,673 sf
Average Rent/Unit	N/A
Average Rent/SF	N/A
Year Built/Renovated	1895/ N/A
Land Area Net	2.300 ac/ 100,188 sf
Construction Class/ Type	C/ Average
Exterior Finish	Brick
General Amenities	N/A



Transaction Details

Type	Sale	Primary Verification	Costar, Deed
Interest Transferred	Fee Simple	Transaction Date	06/30/2023
Condition of Sale	Average	Recording Date	07/11/2023
Recorded Buyer	GSP Southern Ave LLC	Sale Price	$5,000,000
Buyer Type	Corporation	Financing	Market Rate Financing
Recorded Seller	Cincinnati Property Management of Ohio LLC	Cash Equivalent	$5,000,000
Marketing Time	N/A	Capital Adjustment	$0
Listing Broker	N/A	Adjusted Price	$5,000,000
Doc #	2023-0047573	**Adjusted Price / sf**	**$56.39**
Buyer's Primary Analysis	N/A	Occupancy at Sale	N/A
Static Analysis Method	N/A	Underwritten Occupancy	Static Analysis-N/A
Source	Static Analysis-N/A	Potential Gross Income	Static Analysis-N/A
NOI / sf	Static Analysis-N/A	Vacancy/Collection Loss	Static Analysis-N/A
IRR	N/A	Effective Gross Income	Static Analysis-N/A
OER	Static Analysis-N/A	Expenses	Static Analysis-N/A
Expenses /sf	Static Analysis-N/A	Net Operating Income	Static Analysis-N/A
Cap Rate	Static Analysis-N/A		

Comments

This comparable represents a 88,673 square foot school facility located in Cincinnati, Ohio. The property was originally built in 1895 and in 2022 was operating as the Mount Auburn International Academy The 88,673 square foot building includes a mix of offices , class rooms, gymnasium, cafeteria, & additional storage/maintenance rooms. The property is currently under contract to be purchased. The property was purchased in June 2023 for $5,000,000 or $56.39 per square foot. The property was purchased for use as the Mount Auburn Preparatory Academy charter school.

Sale — Special - Other — No. 3

Property Name	Shellaberger Tennis Center / Studio
Address	1600 1/2 St. Michaels Drive Santa Fe, NM 87505
County	Santa Fe
Govt./Tax ID	910021309
Gross Building Area (GBA)	65,000 sf
Condition	Good
Parking Type/ Ratio	Open Asphalt/ N/A
Floor Count	1
Total # of Units	0 Units
Average Unit Size	N/A
Average Rent/Unit	N/A
Average Rent/SF	N/A
Year Built/Renovated	2002/ 2022
Land Area Net	8.612 ac/ 375,139 sf
Construction Class/ Type	S/ Average
Exterior Finish	Steel
General Amenities	N/A



Transaction Details

Type	Sale	Primary Verification	Buyer, Broker, Appraiser
Interest Transferred	Fee Simple	Transaction Date	10/31/2022
Condition of Sale	None	Recording Date	10/31/2022
Recorded Buyer	Midtown SF Residential QOZB	Sale Price	$6,700,000
Buyer Type	Developer	Financing	Market Rate Financing
Recorded Seller	Rose & Hitman	Cash Equivalent	$6,700,000
Marketing Time	11 Month(s)	Capital Adjustment	$2,500,000
Listing Broker	Barker Realty / Dave Gurule	Adjusted Price	$9,200,000
Doc #	2000583	**Adjusted Price / sf**	**$141.54**
Buyer's Primary Analysis	N/A	Occupancy at Sale	N/A
Static Analysis Method	N/A	Underwritten Occupancy	Static Analysis-N/A
Source	Static Analysis-N/A	Potential Gross Income	Static Analysis-N/A
NOI / sf	Static Analysis-N/A	Vacancy/Collection Loss	Static Analysis-N/A
IRR	N/A	Effective Gross Income	Static Analysis-N/A
OER	Static Analysis-N/A	Expenses	Static Analysis-N/A
Expenses /sf	Static Analysis-N/A	Net Operating Income	Static Analysis-N/A
Cap Rate	Static Analysis-N/A		

Comments

The former Shellaberger Tennis Center was constructed in 2002 tennis facility as a public tennis club on the College of Santa Fe campus. It has 65,000 square feet of gross building area, initially for indoor tennis use. It was marketed for mixed use, potentially residential or office, and sold in May, 2022, closing in October after the initial offer fell through. The closing price was $6,700,000. The buyer considered multiple reconfigurations, and ultimately repurposed the facility as a film soundstage/professional office. According to the new owners the facility required $1,500,000 for the soundstages to be retrofitted and soundproofed, as well as an additional $1,000,000 is needed for electrical upgrades. It has a low land-to-building ratio of 17%, indicating some potential surplus land available for expansion or exterior storage.

Sale | Industrial - WH / Distribution / Logistics | No. 4

Property Name	Blackhall Studios
Address	1415 Constitution Road SE Atlanta, GA 30315
County	DeKalb
Govt./Tax ID	Multiple
Gross Building Area (GBA)	848,239 sf
Condition	N/A
Number of Buildings	24
Parking Type/Ratio	Surface/ 1.89:1,000 sf
Year Built/Renovated	1987/ 2017
Floor Count	1
Occupancy Type	Owner/User
Actual Land to Bldg Ratio	2.70:1
Land Area Net	52.534 ac/ 2,288,383 sf
Shape	Irregular
Zoning	M (Manufacturing)/Soapstone Ridge Historic District
% Office	2%
Clear Ceiling Height	28 - 45 ft
Construction Class/Type	C/ Average
Exterior Finish	Tilt-up Concrete
Rail Access	N/A
Loading	N/A
Fire Protection	Wet system



Transaction Details

Type	Sale	Primary Verification	PSA, Public Records, Seller Statement, Prior Appraisal
Interest Transferred	Mixed Fee/Lease Hold	Transaction Date	04/19/2021
Condition of Sale	Arm's Length	Recording Date	04/21/2021
Remaining Lease Term	N/A	Avg. Credit Rating	N/A
Recorded Buyer	BGP Atlanta I Propco, LLC	Sale Price	$120,000,100
Buyer Type	Private Investor	Financing	Cash to Seller
Recorded Seller	Blackhall Real Estate, LLC	Cash Equivalent	$120,000,100
Marketing Time	N/A	Capital Adjustment	$0
Listing Broker	N/A	Adjusted Price	$120,000,100
Doc #	29294 / 343	**Adjusted Price / sf**	**$141.47**
Buyer's Primary Analysis	N/A	Occupancy at Sale	80%
Static Analysis Method	Pro Forma (Stabilized)	Underwritten Occupancy	N/A
Source	Seller	Potential Gross Income	N/A
NOI / sf	$12.92	Vacancy/Collection Loss	N/A
IRR	N/A	Effective Gross Income	$18,755,000
OER	41.59%	Expenses	$7,799,902
Expenses /sf	$9.20	Net Operating Income	$10,955,098
Cap Rate	9.13%		

Comments

This comparable represents the sale of Blackhall Studios, a movie and film production studio located on two adjacent campuses in southeast Atlanta. The Main Campus is an approximate 411,532-square-foot, state-of-the-art movie and film production studio with nine sound stages and a centralized office, warehouse, and millwork facility, as well as individual office bungalows. These buildings were built in 2017-2018 and are located at 1415 Constitution Road SE. The East Campus, including The Grove, is an approximate 436,707-square-foot, movie and film production studio divided into multiple sound stages, office, and millwork uses. The buildings were constructed in 1987, and renovated, opening in 2017 and 2018. This property is located at 3475, 3495, and 3342 International Park Drive SE. Blackhall has been home to productions for Disney, Warner Brothers, and Universal Studios, as well as Netflix.

Blackhall Studios was sold to Los Angeles based private equity firm Commonwealth Group for a reported price of $120 million. The transaction was structured as an "Asset Purchase Agreement" and included both real property and assignment of leases for buildings and property comprising the East Campus (including The Grove), as well as furnishings and equipment, and assumption of certain liabilities. A detailed allocation was not available, though the recorded price for the fee simple interest transferred was $100 million. The pro forma shown is the seller's operating budget for 2021. It is generally supported by actual 2019 operations, allowing for additional operations. In 2020, revenue was significantly negatively impacted by the COVID-19 pandemic. However, commitments for 2021 had the studio operating at near-full capacity.

Sale | Special - School | No. 5

Property Name	Charter School Campus
Address	4018 South Presa Street San Antonio, TX 78223
County	Bexar
Govt./Tax ID	Multiple
Net Rentable Area (NRA)	68,098 sf
Condition	Average
Parking Type/ Ratio	Open/ 0.98:1,000 sf
Floor Count	3
Total # of Units	0 Units
Average Unit Size	N/A
Average Rent/Unit	N/A
Average Rent/SF	N/A
Year Built/Renovated	1921/ 2017
Land Area Net	7.100 ac/ 309,276 sf
Construction Class/ Type	C/ Good
Exterior Finish	Masonry
General Amenities	N/A



Transaction Details

Type	Sale	Primary Verification	Buyer
Interest Transferred	Fee Simple	Transaction Date	03/18/2021
Condition of Sale	Arms length	Recording Date	03/19/2021
Recorded Buyer	Royal School Systems	Sale Price	$5,750,000
Buyer Type	End User	Financing	Market Rate Financing
Recorded Seller	New Frontiers Charter School, Inc.	Cash Equivalent	$5,750,000
Marketing Time	6 Month(s)	Capital Adjustment	$0
Listing Broker	Oldham Goodwin Group, Inc.	Adjusted Price	$5,750,000
Doc #	71511	**Adjusted Price / sf**	**$84.44**
Buyer's Primary Analysis	Owner/Occupier		
Occupancy at Sale	100%		

Comments

This comparable represents the sale of a 68,098-square foot charter school located at 4018 South Presa Street in San Antonio, Texas. The improvements were originally constructed in 1921, renovated in 2013 and 2017, and are situated on a 7.10-acre site. Amenities include a full kitchen/cafeteria, basketball pavillion and athletic field. The property is presently owner-occupied by New Frontiers Public Schools and operated as the Frank L. Madla Accredited Collegiate Academy. It sold in March 2021 for $5,750,000, or $84.44 per square-foot.

Property Name	Aztec Warrior Studios
Address	1550 Agape Way Decatur, GA 30035
County	DeKalb
Govt./Tax ID	15-196-03-023
Gross Building Area (GBA)	18,458 sf
Condition	Good
Number of Buildings	1
Parking Type/Ratio	Surface/ N/A
Year Built/Renovated	1993/ N/A
Floor Count	1
Occupancy Type	Owner/User
Actual Land to Bldg Ratio	18.17:1
Land Area Net	7.700 ac/ 335,412 sf
Shape	Irregular
Zoning	RM-HD
% Office	N/A
Clear Ceiling Height	ft
Construction Class/Type	C/ N/A
Exterior Finish	N/A
Rail Access	N/A
Loading	N/A
Fire Protection	N/A



Transaction Details

Type	Sale	Primary Verification	Deed, PT61
Interest Transferred	Fee Simple	Transaction Date	07/24/2019
Condition of Sale	Arm's length	Recording Date	N/A
Recorded Buyer	ADA 108 LLC	Sale Price	$1,562,500
Buyer Type	End User	Financing	Not Available
Recorded Seller	Trinity Christian Center of Santa Ana Inc.	Cash Equivalent	$1,562,500
Marketing Time	N/A	Capital Adjustment	$0
Listing Broker	N/A	Adjusted Price	$1,562,500
Doc #	27688/780	**Adjusted Price / sf**	**$84.65**
Buyer's Primary Analysis	Owner/Occupier		
Occupancy at Sale	0%		

Comments

This 18,458 square foot building is located at 1550 Agape Way in Decatur, GA. The improvements were constructed in 1993 and are situated on a 7.70 acre site. The improvements are tilt-up concreate exterior with a brick façade along the front of the building. The property was sold from Trinity Christian Center of Santa Ana who had their broadcasting network at this location, to ADA 108 LLC. The buyer purchased the property as a film production studio. The property is now know as the Aztec Warrior Studios. The property sold for $1,562,500 or $84.65 in July 2019.

Addendum B

RENT COMPARABLE DATA SHEETS

© 2024 CBRE, Inc.

Rental Survey — Industrial - WH / Distribution / Logistics — No. 1

Property Name	1000 Siler Park Ln
Address	1000 Siler Park Ln Santa Fe, NM 87507
County	Santa Fe
Govt./Tax ID	016001223
Gross Building Area (GBA)	53,668 sf
Condition	Average
Number of Buildings	1
Parking Type/Ratio	Surface/ N/A
Year Built/Renovated	1980/ N/A
Floor Count	1
Occupancy Type	Single Tenant
Actual Land to Bldg Ratio	2.76:1
Land Area Net	3.400 ac/ 148,104 sf
Shape	Irregular
Zoning	I2- General Industrial
% Office	30%
Clear Ceiling Height	20 ft
Construction Class/Type	S/ Average
Exterior Finish	Aluminum
Rail Access	N/A
Loading	N/A
Fire Protection	N/A



Quoted Terms

Reimbursements	N/A	Rent Changes/Steps	N/A
Occupancy	100%	Free Rent	N/A
Tenant Size	N/A	TI Allowance	N/A
Lease Term	N/A	Reimbursement Amount	N/A
Survey Date	05/2023	Total Oper. & Fixed Exp.	N/A
Verification	N/A	Annual Base Rent	per sf

Actual Leases

Tenant Name	Tenancy Use Type	Size (sf)	Term (Mo.)	Type of Lease	Start Date	Reimbs.	Rent Changes / Steps	Free Rent (Mo.)	TI Allowance per sf	Annual Base Rate per sf
Hajoca	Industrial	53,688	72	Renewal	Nov 2022	NNN	3% / 5 Yr	N/A	N/A	$6.13

Comments

This is a 53,668-square foot industrial (warehouse/distribution) facility located at 1000 Siler Park Ln in Santa Fe, New Mexico. The improvements were constructed in 1980 and are
situated on a 4.65-acre site. The clear height of the improvements is 20' and the office finish approximates 33.5%. The property has been leased by HAJOCA, which has been in this location since 1989, most recently extended in November, 2022, for a six year term, with a rent currently at $6.13 per square foot, or $328,755 annually.

Rental Survey — Industrial - WH / Distribution / Logistics — No. 2

Property Name	N/A
Address	2516 Camino Entrada Santa Fe, NM 87507
County	Santa Fe
Govt./Tax ID	N/A
Gross Building Area (GBA)	13,220 sf
Condition	Average
Number of Buildings	1
Parking Type/Ratio	N/A/ N/A
Year Built/Renovated	2002/ N/A
Floor Count	1
Occupancy Type	Single Tenant
Actual Land to Bldg Ratio	6.43:1
Land Area Net	1.950 ac/ 84,942 sf
Shape	Rectangular
Zoning	C-2
% Office	40%
Clear Ceiling Height	15 ft
Construction Class/Type	S/ Average
Exterior Finish	Steel
Rail Access	N/A
Loading	N/A
Fire Protection	N/A



Quoted Terms

Reimbursements	NNN	Rent Changes/Steps	N/A
Occupancy	100%	Free Rent	N/A
Tenant Size	13,220 sf	TI Allowance	N/A
Lease Term	60 Mo(s).	Reimbursement Amount	N/A
Survey Date	04/2023	Total Oper. & Fixed Exp.	N/A
Verification	Phase One Realty	Annual Base Rent	$12.00 per sf

Actual Leases

Tenant Name	Tenancy Use Type	Size (sf)	Term (Mo.)	Type of Lease	Start Date	Reimbs.	Rent Changes / Steps	Free Rent (Mo.)	TI Allowance per sf	Annual Base Rate per sf
Amazon	Industrial	13,200	60	New	Apr 2021	NNN	N/A	N/A	N/A	$12.00

Comments

This building is on Camino Entrada, just off of Cerrillos Road. It was formerly occupied by United Rentals, as well as Santa Fe Autoworks. It was placed on the market for $12.00 psf NNN in late 2021, and leased in April, 2022. The tenant was not disclosed, nor the lease amount, but market participants believe it is Amazon, being used as a last mile warehouse, and the lease signing was at or near list.

Rental Survey — Industrial - WH / Distribution / Logistics — No. 3

Property Name	Second Street Brewery
Address	2920 Rufina Street Santa Fe, NM 87507
County	Santa Fe
Govt./Tax ID	1-051-097-131-095
Gross Building Area (GBA)	20,000 sf
Condition	Average
Number of Buildings	1
Parking Type/Ratio	Open Asphalt/ 0.40:1,000 sf
Year Built/Renovated	1971/ N/A
Floor Count	1
Occupancy Type	Single Tenant
Actual Land to Bldg Ratio	2.28:1
Land Area Net	1.048 ac/ 45,629 sf
Shape	Irregular
Zoning	I-2
% Office	8%
Clear Ceiling Height	14 ft
Construction Class/Type	S/ N/A
Exterior Finish	Metal
Rail Access	No
Loading	2 Dock high/1 grade level
Fire Protection	No



Quoted Terms

Reimbursements	NNN	Rent Changes/Steps	CPI/3 Years
Occupancy	100%	Free Rent	0 Mo(s).
Tenant Size	20,000 sf	TI Allowance	$0.00 per sf
Lease Term	60 Mo(s).	Reimbursement Amount	N/A
Survey Date	06/2021	Total Oper. & Fixed Exp.	N/A
Verification	Paul Duran / 505-310-5566	Annual Base Rent	$6.00 per sf

Actual Leases

Tenant Name	Tenancy Use Type	Size (sf)	Term (Mo.)	Type of Lease	Start Date	Reimbs.	Rent Changes / Steps	Free Rent (Mo.)	TI Allowance per sf	Annual Base Rate per sf
Second Street Brewery	Industrial	20,000	60	Renewal	Jun 2021	NNN	CPI/3 Years	0.00	$0.00	$6.75

Comments

This comparable represents the renewal lease of a warehouse in the Siler Road industrial area of Santa Fe, NM, which was converted into a brewery and tap room for Second Street Brewery. This property is located just around the corner from the Meow Wolf art complex, a popular tourist attraction. This property had previously been utilized as a mattress warehouse and had minimal office buildout or yard area. This property was purchased by a local broker/investor in February 2015 for $1,000,000 who immediately started marketing it for lease. Second Street Brewery signed a 5-year NNN lease in approximately June 2016 at $120,000 per year, or $6.00 per square foot. This lease did not include any TI allowance and the brewery spent an estimated $1,000,000 on renovations to transform the property into a brewery and tap room. Approximately half of this was for real estate to include an HVAC system, new restrooms, upgraded electrical system, new trench drains, landscaping, and exterior improvements. The remainder represented equipment costs for a 20-barrel brewing system. The lease includes three 5-year renewal options with CPI escalations every three years throughout the initial and renewal terms.

Rental Survey — Industrial - WH / Distribution / Logistics — No. 4

Property Name	N/A
Address	4525 Hwy 14 Rd - Building 2 Santa Fe, NM 87507
County	Santa Fe
Govt./Tax ID	N/A
Net Rentable Area (NRA)	10,000 sf
Condition	N/A
Number of Buildings	1
Parking Type/Ratio	Surface/ 2.40:1,000 sf
Year Built/Renovated	N/A/ N/A
Floor Count	1
Occupancy Type	N/A
Actual Land to Bldg Ratio	2.00:1
Land Area Net	0.460 ac/ 20,038 sf
Shape	Rectangular
Zoning	N/A
% Office	N/A
Clear Ceiling Height	ft
Construction Class/Type	C/ N/A
Exterior Finish	N/A
Rail Access	N/A
Loading	N/A
Fire Protection	N/A



Quoted Terms

Reimbursements	Modified Gross	Rent Changes/Steps	N/A
Occupancy	100%	Free Rent	N/A
Tenant Size	10,000 sf	TI Allowance	N/A
Lease Term	60 Mo(s).	Reimbursement Amount	N/A
Survey Date	11/2021	Total Oper. & Fixed Exp.	N/A
Verification	N/A	Annual Base Rent	$10.00 per sf

Actual Leases

Tenant Name	Tenancy Use Type	Size (sf)	Term (Mo.)	Type of Lease	Start Date	Reimbs.	Rent Changes / Steps	Free Rent (Mo.)	TI Allowance per sf	Annual Base Rate per sf
Bimbo Bakeries	Industrial	10,000	60	New	Nov 2018	Modified Gross	N/A	N/A	N/A	$10.00

Comments

This rental survey represents the direct lease for 4525 Hwy 14 Rd, Building 2 in Santa Fe County, Santa Fe New Mexico. This is an industrial property type with a single tenancy with a rentable area of 10,000 SF on 0.46 acres of land. This property was on the market for 5 months and was occupied in November of 2018. The reimbursements are on a modified gross basis and the lease is reported to be a 5 year term, occupied by Bimbo Bakeries.

Rental Survey — Office - Single Tenant — No. 5

Property Name	US Forest Services Office building
Address	11 Forest Lane Santa Fe, NM 87508
County	Santa Fe
Govt./Tax ID	1047092527317
Net Rentable Area (NRA)	23,000 sf
Condition	Good
Number of Buildings	1
Parking Type/Ratio	Open Asphalt/ 6.30:1,000 sf
Year Built/Renovated	2009/ N/A
Floor Count	1
Occupancy Type	Single Tenant
Land Area Net	5.001 ac/ 217,844 sf
Actual FAR	0.11
Zoning	Planned Development District (PDD)
Construction Class/ Type	D/ Good
External Finish	Stucco
Amenities	N/A



Quoted Terms

Reimbursements	Full Service	Rent Changes/Steps	N/A
Occupancy	100%	Free Rent	N/A
Tenant Size	23,000 sf	TI Allowance	N/A
Lease Term	60 Mo(s).	Reimbursement Amount	N/A
Survey Date	09/2020	Total Oper. & Fixed Exp.	N/A
Verification	N/A	Annual Base Rent	$22.33 per sf

Actual Leases

Tenant Name	Tenancy Use Type	Size (sf)	Term (Mo.)	Type of Lease	Start Date	Reimbs.	Rent Changes / Steps	Free Rent (Mo.)	TI Allowance per sf	Annual Base Rate per sf
USDA Forest Service	Office	23,000	60	Renewal	Sep 2019	Full Service	N/A	N/A	N/A	$22.33

Comments

This is a 23,000-square foot, one-story, suburban office building located at 11 Forest Lane in Santa Fe, New Mexico. The improvements were constructed in 2009 and are situated on a 5.00-acre site. Currently, the property is 100.0% occupied by the United States Department of Agriculture, Forest Service Division. An original 10-year, firm lease term commenced September 17, 2009. Base rent during the original term was flat at $676,890 per year, or approximately $29.43 per square foot, inclusive of amortized tenant improvements, with CPI adjustments to operating expenses of $4.13 per square foot. The lease included two, five-year options to renew at $520,950 per year, or approximately $22.65 per square foot, prior to CPI adjustments for operating expenses. The GSA tenant, in a letter dated March 12, 2019, indicated its intention of exercising the first, five-year renewal option. Based on executed Lease Amendment No. PLA047, signed December 16, 2019, the total annual rent for the first option period has been negotiated to $513,570.34 annually, equivalent to $22.33 per square foot, including a base rent of $18.52 per square foot, and CPI adjusted operating expenses of $3.81 per square foot.

Rental Survey — Office - Multi Tenant — No. 6

Property Name	University Plaza
Address	330 Garfield Street Santa Fe, NM 87501
County	Santa Fe
Govt./Tax ID	N/A
Net Rentable Area (NRA)	20,595 sf
Condition	Average
Number of Buildings	1
Parking Type/Ratio	On-Street/ N/A
Year Built/Renovated	1881/ 2018
Floor Count	4
Occupancy Type	Single Tenant
Land Area Net	0.283 ac/ 12,310 sf
Actual FAR	1.67
Zoning	BCDSAN
Construction Class/ Type	C/ Average
External Finish	Stucco
Amenities	N/A

Quoted Terms

Reimbursements	N/A	Rent Changes/Steps	N/A
Occupancy	N/A	Free Rent	N/A
Tenant Size	N/A	TI Allowance	N/A
Lease Term	N/A	Reimbursement Amount	N/A
Survey Date	01/2024	Total Oper. & Fixed Exp.	N/A
Verification	N/A	Annual Base Rent	per sf

Actual Leases

Tenant Name	Tenancy Use Type	Size (sf)	Term (Mo.)	Type of Lease	Start Date	Reimbs.	Rent Changes / Steps	Free Rent (Mo.)	TI Allowance per sf	Annual Base Rate per sf
Fidelity Title	Office	3,104	36	New	Aug 2023	Gross	Flat	N/A	N/A	$23.70
Hunter Custom Homes	Office	2,078	36	New	May 2023	Gross	Flat	N/A	N/A	$28.00

Comments

Rental Survey — Office - Office Park — No. 7

Property Name	Butolph Office Park
Address	400 Kiva Court NE Santa Fe, NM 87505
County	Santa Fe
Govt./Tax ID	N/A
Net Rentable Area (NRA)	10,799 sf
Condition	N/A
Number of Buildings	N/A
Parking Type/Ratio	N/A/ N/A
Year Built/Renovated	2013/ N/A
Floor Count	N/A
Occupancy Type	N/A
Land Area Net	1.580 ac/ 68,825 sf
Actual FAR	0.16
Zoning	N/A
Construction Class/ Type	N/A/ N/A
External Finish	N/A
Amenities	N/A



Quoted Terms

Reimbursements	N/A	Rent Changes/Steps	N/A
Occupancy	100%	Free Rent	N/A
Tenant Size	N/A	TI Allowance	N/A
Lease Term	N/A	Reimbursement Amount	N/A
Survey Date	01/2024	Total Oper. & Fixed Exp.	N/A
Verification	N/A	Annual Base Rent	per sf

Actual Leases

Tenant Name	Tenancy Use Type	Size (sf)	Term (Mo.)	Type of Lease	Start Date	Reimbs.	Rent Changes / Steps	Free Rent (Mo.)	TI Allowance per sf	Annual Base Rate per sf
Gallagher Insurance	Office	1,325	36	New	Mar 2023	Modified Gross	3% annual increase	N/A	N/A	$18.11
Sun Mountain Wellness	Office	1,800	36	New	Dec 2022	Modified Gross	3% annual increases	N/A	N/A	$24.00
Success Smile Orthodontics	Office	1,950	36	New	May 2022	Modified Gross	N/A	N/A	N/A	$18.46

Comments

Tenants pays flat rate plus utilities.

Rental Survey — Office - Office Condominium — No. 8

Property Name	Galisteo Professional Office Park Condos
Address	531 Harkle Unit A Santa Fe, NM 87505
County	Santa Fe
Govt./Tax ID	N/A
Net Rentable Area (NRA)	2,469 sf
Condition	N/A
Number of Buildings	N/A
Parking Type/Ratio	N/A/ N/A
Year Built/Renovated	1988/ N/A
Floor Count	1
Occupancy Type	N/A
Land Area Net	0.060 ac/ 2,614 sf
Actual FAR	0.94
Zoning	H-Z
Construction Class/ Type	N/A/ N/A
External Finish	N/A
Amenities	N/A



Quoted Terms

Reimbursements	N/A	Rent Changes/Steps	N/A
Occupancy	N/A	Free Rent	N/A
Tenant Size	N/A	TI Allowance	N/A
Lease Term	N/A	Reimbursement Amount	N/A
Survey Date	01/2024	Total Oper. & Fixed Exp.	N/A
Verification	N/A	Annual Base Rent	per sf

Actual Leases

Tenant Name	Tenancy Use Type	Size (sf)	Term (Mo.)	Type of Lease	Start Date	Reimbs.	Rent Changes / Steps	Free Rent (Mo.)	TI Allowance per sf	Annual Base Rate per sf
Family Medicine	Office	2,469	36	New	Oct 2023	Modified Gross	3% annually	N/A	N/A	$19.00

Comments

Rental Survey — Office - Other — No. 9

Property Name	The Lofts
Address	3600 Cerrillos Road, Building 700 Santa Fe, NM 87507
County	Santa Fe
Govt./Tax ID	1050096363137CS0000
Net Rentable Area (NRA)	24,273 sf
Condition	Average
Number of Buildings	1
Parking Type/Ratio	Open Asphalt/ 5.15:1,000 sf
Year Built/Renovated	2002/ N/A
Floor Count	3
Occupancy Type	Multi-tenant
Land Area Net	1.480 ac/ 64,469 sf
Actual FAR	0.44
Zoning	C-2 General Commercial
Construction Class/ Type	D/ Good
External Finish	Stucco
Amenities	Flat Roofs, On-Site Management, Surface Parking



Quoted Terms

Reimbursements	N/A	Rent Changes/Steps	N/A
Occupancy	N/A	Free Rent	N/A
Tenant Size	N/A	TI Allowance	N/A
Lease Term	N/A	Reimbursement Amount	N/A
Survey Date	10/2022	Total Oper. & Fixed Exp.	N/A
Verification	N/A	Annual Base Rent	per sf

Actual Leases

Tenant Name	Tenancy Use Type	Size (sf)	Term (Mo.)	Type of Lease	Start Date	Reimbs.	Rent Changes / Steps	Free Rent (Mo.)	TI Allowance per sf	Annual Base Rate per sf
Functional Medicine	Office	1,195	23	Renewal	Sep 2022	Modified Gross	N/A	N/A	N/A	$19.83
Sungreen Cleaner (Noel Lopez)	Office	1,100	11	Renewal	Feb 2022	Modified Gross	N/A	N/A	N/A	$18.00
Dan Frazier	Office	670	11	New	Nov 2021	Modified Gross	N/A	N/A	N/A	$21.94
Pilar Nieto	Office	703	35	New	Oct 2021	Modified Gross	N/A	N/A	N/A	$18.78

Comments

Addendum C

OPERATING DATA

© 2024 CBRE, Inc.

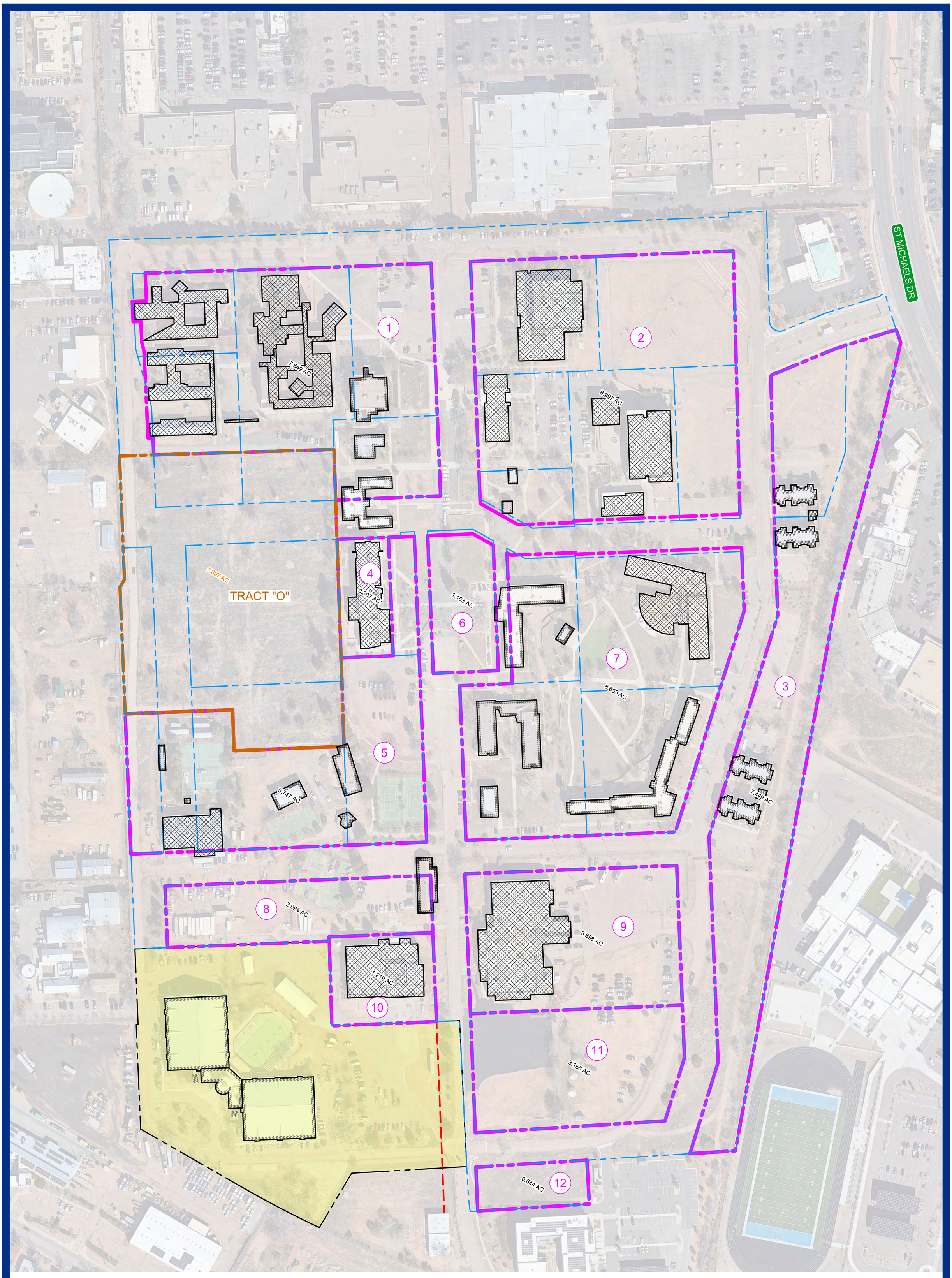

ORIGINAL NEW PARCELS

REVISED NEW PARCELS

SHELLABERGER PARCEL

TRACT "O"

TRACT

MIDTOWN SITE LAYOUT

- NEW PARCELS
- SHELLABERGER PARCEL

0 50' 100'

WILSON & COMPANY

M:\MSD\23-600-027-00\2_DISCIPLINES_EXHIBITS\SITE LAYOUT 3.DWG 2/8/2024 8:09 AM

BINDER 2

PROPOSAL FOR REDEVELOPMENT & EXPANSION MIDTOWN STUDIO LOTS RFP 23/35/P

Prepared for the City of Santa Fe
February 28, 2023

MIDTOWN
SANTA FE
PRODUCTIONS

PERE
HOLDINGS

TABLE OF CONTENTS

D. SCHEDULE AND ECONOMIC ANALYSIS PROPOSAL (BINDER 2)

1. Narrative of Schedule and Economic Analysis Proposal

a) Narrative of Economic Assumptions and Purchase Offer

2. Completed Schedule and Economic Analysis Proposal

a) Studio Redevelopment of Existing Properties

b) New Construction of Workforce Housing

c) New Construction Soundstages

d) Development Schedule

e) Construction Costs Support

D. SCHEDULE AND ECONOMIC ANALYSIS PROPOSAL

1. NARRATIVE OF SCHEDULE AND ECONOMIC ANALYSIS PROPOSAL

NARRATIVE OF ECONOMIC ASSUMPTIONS

Key Assumptions

The Offeror's development program for the RFP Lots consists of the following: 1) redevelopment of the existing campus buildings into a full service production studio (Onate will be demolished,) 2) new construction of a 110,000 sf workforce housing development, 3) construction of two new large soundstages totaling approximately 60,000 sf based on market demand. Offeror will also create new retail spaces and a new educational facility in the existing campus buildings. Note that Offeror's valuation for the RFP Lots is based on their current and future development value without the addition of Shellaberger's soundstages. Offeror's Midtown Santa Fe Productions opportunity fund will use its own equity to acquire the RFP Lots and is required to invest such funds within 6 months of its 2023 March 15th corporate tax filing date, or by September 11th.

To value the land assets for each development program, Offeror has applied a direct cap rate to stabilized net income. It has then deducted the costs of development (excluding land) plus a 20% profit margin on equity to arrive at a residual asset/land value. Offeror has not used a discounted cash flow analysis because discount rates are unusually high, future cap rates are uncertain, and the interest rate environment is unpredictable. The resulting margin of error would distort a residual land valuation. All revenue and operating expense assumptions are assumed to be 2023/2024 fiscal year. Following are assumptions for each of the three main development programs:

NARRATIVE OF ECONOMIC ASSUMPTIONS (Contd pg 2)

Adaptive Reuse of Garson Studios, Benildus, Driscoll and Alumni

Operating revenue assumptions include a $3/sf/month rental rate for studio space, a $2/sf/month rental rate for office support and a $1.5/sf/month rental rate for storage and mill space. This analysis assumes a 70% occupancy rate for soundstages and a 60% occupancy rate for support space in the current configuration. It will be difficult to drive higher production occupancy in the office/support buildings at Benildus, Driscoll or Alumni only utilizing Garson one medium and two small stages. Without a large production in occupancy, which requires multiple large stages, there will be only correspondingly moderate demand for accessory office or support space.

In terms of operating costs for the existing studio properties, Offeror has created a zero-base budget in the absence of historical operating statements for the buildings, based on its recent experience at the Shellaberger. The payroll budget assumes that the studio complex will employ a staff consisting of: 1) general manager, 2) a stage manager, 3) maintenance person, 4) two porter/grounds keepers, and 5) night security for a total annual payroll of $400,000. All employees will be local hires and will receive health benefits and 401k. Note that the operating expenses required to manage this spread-out collection of smaller buildings makes the campus costlier to operate than a single large studio building. In the past, security, maintenance, payroll, management, utility, property management and landscape costs were paid by the city through its general operating budget. In the future, the Offeror will need to pay for these expenses as well as full real estate taxes.

NARRATIVE OF ECONOMIC ASSUMPTIONS (Contd pg 3)

The capitalization rate used to value the assets is 8%, reflecting the risk of the asset class and the restrictive zoning. As stated in the project summary, productions cannot typically be booked far in advance and they utilize short term leases. And because the RFP Lots have been zoned to permit only film production, when the market changes over time, the buildings may experience increased vacancy and financial downside. That increases the investment risk profile and decreases the valuation of the land.

It is the Offeror's plan to renovate the buildings utilizing its own opportunity fund equity and minimal debt. After the studio property is renovated and achieves stabilized operating income (and provided interest rates decrease,) Offeror will refinance the property with permanent debt. The proforma assumes a refinance at stabilization at 50% loan-to-cost at 6.5% interest and 30 year amortization.

The property assessment reports for Benildus Hall, Driscoll Hall and Garson Studio prepared by Wilson Companies on behalf of the city indicate an aggregate deferred maintenance of approximately $5.7m. That budget does not include the capital costs to separate the properties from the campus' private utility grid and bring public utilities to each of the properties. Offeror has assumed another $300,000 for that activity and have an overall renovation budget of approximately $6m of hard costs plus $1m in soft costs.

Based on the above assumptions and the following financial analysis, the adaptive Reuse of the existing campus buildings as a studio will generate annual real estate taxes of $65,000 and a residual land/existing building value of approximately $2,640,000.

NARRATIVE OF ECONOMIC ASSUMPTIONS (Contd pg 4)

Development of Workforce Housing

Offeror proposes to develop a 125 unit workforce housing project consisting of 15% workforce housing rental units and 85% market rate rental. The building will also include a furnished transient housing component with fully furnished apartments that can function as short term residential or hotel units for the production industry.

Current operating revenue assumptions include a $2/sf/month rental rate for workforce housing and $3/sf/month rental rate for residential market rate rentals. This analysis assumes a 95% occupancy rate for both workforce and market rate housing.

Offeror assumes a fully staffed multifamily operating expense budget that is equal to approximately 35% of revenue.

The attached letter from Jayne Construction from Albuquerque who has built many multifamily buildings in NM indicated cost of construction at $235,000/unit. Although this cost is 10-15% higher than Albuquerque and other parts of the United States, this development is economically feasible provided permanent interest rates decline in the future.

Based on the above assumptions and the following financial analysis, the adaptive Reuse of the existing campus buildings as a studio will generate annual real estate taxes of $200,000 and a residual land value of approximately $2,200,000.

NARRATIVE OF ECONOMIC ASSUMPTIONS (Contd pg 5)

Development of New Soundstages

Offeror proposes to develop two new 20,000 sf soundstages and approximately 27,000 sf of office support space. Current operating revenue assumptions include a $3.5/sf/month rental rate for studio space, a $2.25/sf/mo rental rate for office support and a $1.75/sf/month rental rate for storage and mill space. This analysis assumes an 80% occupancy rate for soundstages and 80% occupancy rate for office/support space in the current configuration. The cap rate has been reduced to 7% reflecting the fact that the studios will be state of the art and can attract larger productions.

In terms of operating costs for the new studio properties, Offeror assumes the addition of a new stage manager and maintenance person who will be supported by the existing staffing at the campus studio properties as well as customary studio real estate operating expenses.

The following letter from Klinger Construction in Albuquerque recently budgeted the expansion of Santa Fe Studios and estimated the cost of a tilt up concrete and steel industrial building at $327 psf in 2023. Unfortunately this high construction cost budget plus the required soft costs and financing costs, make this building economically infeasible to construct in the near future.

Based on the above assumptions and the following financial analysis, the adaptive Reuse of the existing campus buildings as a studio will generate annual real estate taxes of $150,000 and a residual land/existing building value of approximately ($13,270,000.) This large valuation deficit means that the project would not be economically feasible unless construction costs decrease, rents increase, occupancy increases and cap rates decrease.

NARRATIVE OF ECONOMIC ASSUMPTIONS (Contd pg 6)

Purchase Offer/Valuation Summary

The aggregate of the above residual property/land value is $4,840,000. Based on this aggregate and the potential for a positive future value for the new soundstage sites, Offeror proposes to pay a total consideration of $6,500,000 in the form of a fully amortizing land lease over 10 years at $650,000 per annum. When combined with enhanced real estate taxes (some of which will start in 2027,) this nets approximately $915,000 per annum for the city.

Santa Fe Midtown - Garson Theater

PROBABLE COST ESTIMATE 12/27/22

WILSON & COMPANY

ITEM	UNITS	COST/UNIT	COST	COMMENTS
A. ARCHITECTURAL				
Install missing splash blocks	8	$100.00 EA	$800.00	Recommended
Reseal/Spot Repair sealants and flashings	LS	-	$8,000.00	Req. to prevent further damage
Inspect and repair exterior precast joints	LS	-	$14,000.00	Req. to prevent further damage
Repainting and patching finishes	32,588 SF	$0.90 /SF	$29,329.57	Recommended
Replace and repair floor finishes	32,588 SF	$5.00 /SF	$162,940.00	Recommended
Repair and patch exterior finishes	32,588 SF	$0.75 /SF	$24,441.00	Req. to prevent further damage
Upgrade door hardware to ADA-compliance	93	$750.00 EA	$69,750.00	Req. per 2015 IBC
Repair / Replace damaged glazing & skylights	LS	-	$8,000.00	Req, to prevent further damage
Repair / Replace ceilings	32,588 SF	$2.00 /SF	$65,176.00	Recommended
Provide accessible ramps to spaces (when possible)	LS	-	$6,000.00	Req. per 2015 IBC
Provide permanent ADA seating in main theater	LS	-	$24,000.00	Recommended
Install Elevator / Lift to second floor	LS	-	$80,000.00	Requirement TBD on building use
		SUBTOTAL	**$492,436.57**	
B. ELECTRICAL				
Replace light fixtures with LED	32,588 SF	$6.50 SF	$211,822.00	Recommended
Upgrade electrical system (including any HVAC upgrades)	32,588 SF	$10.00 SF	$325,880.00	Req. TBD on building use
		SUBTOTAL	**$537,702.00**	
C. SITE				
Landscaping/Irrigation (dependent on scope).	-	-	-	Recommended
Repair Concrete Sidewalks/Steps/Ramps	500 SY	$30.00 /SY	$15,000.00	Req. for accessibility and safety
Repave & Restripe parking	5,718 SY	$55.00 /SY	$314,490.00	Recommended
		SUBTOTAL	**$329,490.00**	
D. MECHANICAL				
Fire Sprinkler System throughout	32,588 SF	$12.00 /SF	$391,056.00	Req. TBD on building use
General HVAC Maintenance and Repairs	32,588 SF	$4.00 /SF	$130,352.00	Required
Repair Fire Water connection	LS	$15,000.00	-	Required
		SUBTOTAL	**$521,408.00**	
SUBTOTAL			**$1,881,036.57**	
Contingency		10.00%	$188,103.66	
NMGRT - Santa Fe		8.3125%	$156,361.16	
TOTAL ESTIMATED COST			**$2,225,501.39**	

The following is a general estimate of costs. It is intended as a tool to assist the City of Santa Fe with decision making and should not be viewed as a detailed cost estimate.

Santa Fe Midtown - Driscoll Fitness Center

PROBABLE COST ESTIMATE 1/11/23

WILSON & COMPANY

ITEM	UNITS	COST/UNIT	COST	COMMENTS
A. ARCHITECTURAL				
Reseal/Spot Repair sealants and flashings	LS	-	$12,000.00	Req. to prevent damage
Replace / Repair floor finishes	22,712 SF	$5.00 /SF	$113,560.00	Recommended
Repainting and patching finishes	22,712 SF	$0.90 /SF	$20,440.80	Recommended
Replace missing splashbocks	6	$100.00 EA	$600.00	Recommended
Repair and patch exterior finishes	22,712 SF	$0.75 /SF	$17,034.00	Req. to prevent further damage
Repair/ Replace Ceiling Tiles	8,600 SF	$2.00 /SF	$17,200.00	Recommended
Replace walkoff mat at entry	LS	-	$400.00	Req. for safety
Lobby Restroom Renovations for full ADA	120 SF	$400.00 /SF	$48,000.00	Req. per 2015 IBC
Lockerroom Renovations for full ADA (showers & locker area)	1,200 SF	$100.00 /SF	$120,000.00	Req. per 2015 IBC
		SUBTOTAL	**$349,234.80**	
B. ELECTRICAL				
Replace light fixtures with LED	22,712 SF	$6.50 SF	$147,628.00	Recommended
Upgrade electrical system (including HVAC items)	22,712 SF	$12.00 SF	$272,544.00	Req. TBD on building use
		SUBTOTAL	**$420,172.00**	
C. SITE				
Landscaping/Irrigation (dependent on scope).	-	-	-	Recommended
Concrete Sidewalk repair/replacement	160 SY	$30.00 /SY	$4,800.00	Recommended
Parking repaving and restriping	2,365 SY	$55.00 /SY	$130,075.00	Recommended
		SUBTOTAL	**$134,875.00**	
D. MECHANICAL				
General HVAC maintenance and repairs	22,712 SF	$8.00 /SF	$181,696.00	Recommended
		SUBTOTAL	**$181,696.00**	
SUBTOTAL			**$1,085,977.80**	
Contingency		10%	$108,597.78	
NMGRT - Santa Fe		8.3125%	$90,271.90	
TOTAL ESTIMATED COST			**$1,284,847.48**	

The following is a general estimate of costs. It is intended as a tool to assist the City of Santa Fe with decision making and should not be viewed as a comprehensive cost

Santa Fe Midtown - Benildus Hall

PROBABLE COST ESTIMATE 1/11/23

ITEM	UNITS	COST/UNIT	COST	COMMENTS
A. ARCHITECTURAL				
Reseal/Spot Repair sealants and flashings	LS	-	$10,000.00	Req. to prevent damage
Replace / Repair floor finishes	27,757 SF	$2.00 /SF	$55,514.00	Recommended
Repainting and patching finishes	27,757 SF	$0.90 /SF	$24,981.30	Recommended
Replace missing splashbocks	8	$100.00 EA	$800.00	Recommended
Repair/ Replace Ceiling Tiles	27,757 SF	$2.00 /SF	$55,514.00	Recommended
Modify Handrails	40 LF	$25.00 /LF	$1,000.00	Req. per 2015 IBC
Update door Hardware	4	$750.00 EA	$3,000.00	Req. per 2015 IBC
		SUBTOTAL	**$150,809.30**	
B. ELECTRICAL				
Replace light fixtures with LED	27,757 SF	$6.50 SF	$180,420.50	Recommended
Upgrade electrical system (including any HVAC work)	27,757 SF	$12.00 SF	$333,084.00	Req. TBD on building use
		SUBTOTAL	**$513,504.50**	
C. SITE				
Landscaping/Irrigation (dependent on scope)	-	-	-	Recommended
Repair paving/sidewalks (at main entrance)	100 SY	$30.00 SF	$3,000.00	Req. for accessibility and safety
Repave & Restripe parking	3,800 SY	$55.00 SF	$209,000.00	Recommended
		SUBTOTAL	**$212,000.00**	
D. MECHANICAL				
General HVAC Maintenance	27,757 SF	$22.00 /SF	$610,654.00	Recommended
Repair RTU-3	LS	$4,000.00	-	
Repair RTU-4	LS	$4,000.00	-	
Repair / Replace HVAC Controls	LS	-	-	
		SUBTOTAL	**$610,654.00**	
SUBTOTAL			**$1,486,967.80**	
Contingency		10.00%	$148,696.78	
NMGRT - Santa Fe		8.3125%	$123,604.20	
TOTAL ESTIMATED COST			**$1,759,268.78**	

The following is a general estimate of costs. It is intended as a tool to assist the City of Santa Fe with decision making and should not be viewed as a comprehensive cost estimate.

TECHNICAL MEMORANDUM

Wilson & Company Inc

City of Santa Fe
Midtown Engineering Support

To:	Lee Logston, Project Manager City of Santa Fe	**Date:**	08/11/2022 (rev. 8/25/22)
From:	Ross Gabaldon, PE	**Prepared by:**	Ross Gabaldon, PE
TM No.:	WWW-01	**Reviewed by:**	Brian Ambrogi, PE
Subject:	Technical Memorandum- Existing Water and Sewer Infrastructure		

SECTION 1: SUMMARY

The purpose of this report is to evaluate the existing water and sewer utility system's current capacity and determine if the existing water and sewer systems are able to satisfy the demands of the proposed new development for the Santa Fe Midtown area. The following options will be evaluated to determine the most critical infrastructure upgrades necessary to support the Midtown development:

- Sewer System
  - Existing Conditions – Evaluate the present-day flows and available capacity of the existing system
  - Full build-out scenario – Evaluate infrastructure upgrades necessary to the existing system to accommodate full build-out demands and prioritize recommended improvements to align with the respective phases of development.
- Water System
  - Existing Conditions – Evaluate the present-day flows and available capacity of the existing system
  - Full build-out scenario – Evaluate infrastructure upgrades necessary to the existing system to accommodate full build-out demands and prioritize recommended improvements to align with the respective phases of development.

The water and sewer systems were modeled in WaterCAD Connect Edition Update 2, Version 10.02.01.06 and SewerCAD Connect Edition Update 2, Version 10.02.00.55 (respectively) to determine the impact the future demands will have on pressure and flow on the water system and capacity on the sewer system. All assumptions for sewer and water flow rates are shown in **Table 1A and 1B** (attached)

SECTION 2: INTRODUCTION

This technical memorandum was developed in conjunction with the City of Santa Fe and Opticos Design to determine the water and sewer demand of a proposed re-development of the existing Midtown College Campus and evaluate the impacts these new demands would have on infrastructure capacity and sizing. The proposed project location can be found in **Figure 1**, see

Figure 2 for a more detailed layout of the proposed improvement area (definitions for lot codes can be found in **Table 1A and 1B**). Generally, the project is contained within the old community college campus, located near the intersection of Cerillos Rd. and St. Michaels Dr.



Figure 1: Project Location Map

SECTION 3: DESIGN CRITERIA / ASSUMPTIONS

General:

The proposed redevelopment of the campus consists of a variety of parcels, each parcel will be used for multifamily dwellings, commercial, office, or mixed use. See **Figure 2** below for a detailed layout of the various parcels as developed by Opticos Design.

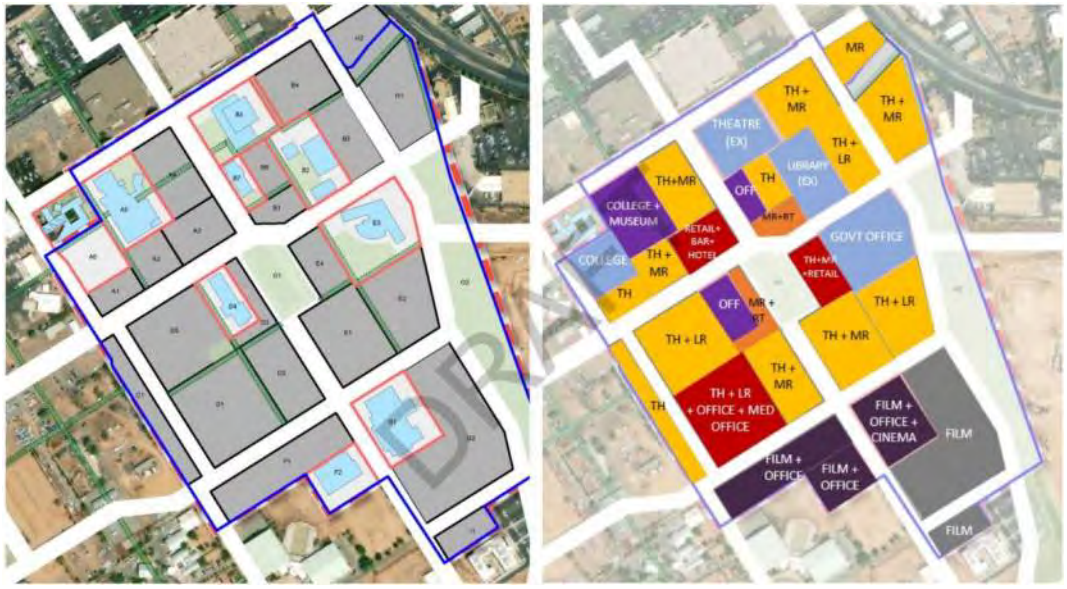

(2-A) *(2-B)*

Figure 2 (A) Land Use Division (B) Land Use Category, See Table 1A & 1B for key

Wilson & Company has developed individual water and sewer demands for each parcel based on land-use data provided by Opticos Design and the City of Santa Fe. Water and sewer demands were calculated based on the use and on a per capita daily demand.

Water Base Flow Assumptions:

Residential

- Residents Per Unit (residential) = 3.41 Persons
- Usage Rate (residential) = 70 GPCPD (gallons per capita per day)

$$Base\ Demand = Residents * Usage * No.of\ Units$$

Office/Commercial

- Occupancy = 0.0032 Occupants / SqFt
- Usage Rate = 25 GPCPD

$$Base\ Demand = Occupancy * Usage * Area$$

Restaurant/Bar

- Occupancy = 330 Customers/day
- Usage Rate = 7 GPCPD

A peaking factor was applied to all water base flows, to determine the flow at the peak hour of the day. A peaking factor of 1.4 was used throughout the system. This peaking factor is used in similar sized developments in New Mexico and is also used by the City of Albuquerque for new xeriscaped residential and commercial developments.

$$Peak\ Flow = Base\ Flow * 1.4$$

Sewer Base Flow Assumptions:

Sewer flows are assumed to consist of 95% of the water base flow for residential and commercial applications. It is assumed that all landscaping will be xeriscaped and require low or no water. Irrigation flows for parks are accounted for separately in the model.

$$SAS\ Flow = Water\ Base\ Flow * 0.95$$

Peaking factors were also applied to the sewer flows. A separate peaking factor for residential and commercial has been used, with a higher peaking factor used for commercial/restaurants as compared to the residential peaking factor. A 1.3x peak factor was used for residential and a 1.6x peaking factor was used for all other parcels in this study. These peaking factors are used in similar sized developments in New Mexico and is also used by the City of Albuquerque for new xeriscaped residential and commercial developments.

$$SAS\ Peak\ Flow = 1.3(residential)\ or\ 1.6(commercial) * SAS\ Base\ Flow$$

SECTION 4: DESIGN ANALYSIS – WATER LINE

WATER SYSTEM DESIGN CRITERIA:

The water system was evaluated in two ways, to determine the capability of the existing system.

- Peak Flow Condition: The system is evaluated at peak flow, to determine if any pipes require upsizing
- Fire Flow condition: The system is run with fire flows (determined per IFC, maximum 2,000 GPM for the area), with the base water demand (not peak) also applied. No special requirements beyond IFC code from the Fire Marshall were specified.

For the initial model run, the system was run at peak flow, with no fire flow. In this condition, the existing system was found to be adequate to handle the peak flows for the area. The system was also evaluated at the base flow + fire flow and was found adequate in this scenario as well. Based on the calculated base and peak flows the existing water system was found to be capable of handling the proposed future demands of the development. As there is no justification to increase capacity of the existing system, no alternatives beyond simple pipe re-routing were analyzed in this report.

Option 1- Additional Waterline
This option is necessary to redirect existing water lines that are currently in the footprint of the future development. These redirected lines will be constructed in the new roadway and in the right of way. All new water lines will be a one to one replacement of existing lines, with no size increases.

As stated previously the existing water system currently will be able to meet the demands required of the future development. The system will have the adequate flows for base and peak demands and meet the required fire flow for the area. These scenarios were evaluated using WaterCAD analysis and design. See **Exhibit 3** for the results of the water modelling, anticipated flows, pipe diameter, and fire flow requirements. See **Exhibit 4** for a layout of the proposed vs. existing pipe line layout.

Additionally, this system was evaluated for fire flows. Based on information provided by the city, hydrants are tested in groups, rather than individually. Hydrant coverage and area flow availability can be seen on **Exhibit 5.** Flows in this exhibit are divided by block, and an average flow rating for any group of hydrants can be obtained by dividing the available flow in the block by the desired number of hydrants. The coverage area for each hydrant is also shown.

ASSUMPTIONS (All water lines):

- Water lines are adequately sized to provide for current and future demands (per modelling results)
- The required minimum fire flow of 2000 GPM will be met by all improvements
- The water analysis using WaterCAD is only taking into account the future development of the proposed project area, not pass-through demands for adjacent areas outside the project area. Evaluation of pass-through flows that would impact the overall City system were beyond the scope of this study.
- Relocated Lines will be installed in new roadways, no asphalt cost included in estimates

Option 1 Pros:
Waterlines will be relocated into accessible Public Right-of-Ways to eliminate future conflicts with area development. Connections along the north end and West of the property will be greatly improved by having a pipe located in the public ROW to connect to.

Option 1 Cons:
The costs incurred for the additional waterline and installation are estimated at $820,180.

Option 2- Do Nothing
Water lines currently interfere with planned development. Additionally, the water line running along the north of the property is within the shopping center parking lot which will present design difficulties and disruption to existing business. Design standards do not allow for the placement of permanent structures on top of utility lines. All areas with new water lines in this alternate will be designated as a public right-of-way.

Option 2 Pros:

Existing infrastructure is already sufficient for flows. The do-nothing scenario would require no costs to the City or future developers.

Option 2 Cons:
There can be no development on top of the existing waterlines. The new development would need to work around the existing water lines and provide easements. Connecting to the existing water line along the back of the cerillos road shopping center would cause design difficulties and disruption to the existing businesses currently served from this water line. This alternate is not recommended

SECTION 5: DESIGN ANALYSIS –SEWER LINE

SEWER SYSTEM ANALYSIS

The existing sewer system divides the existing flow into two sewer sheds, a northern connection point along Cerrillos Road, and a southern connection at Siringo Road. A field visit was performed by Wilson & Company to the proposed site and the existing sewer system was inspected. During inspection, the sewer system connected to the south at Siringo Road was found to exceed the design capacity, and surcharging manholes. The northern connection had a large underutilized sanitary sewer between the manhole on the south end of the breezeway at the Tony Anaya building to Cerillos Road. South of the Tony Anaya building the existing sewer system was in poor condition and undersized, and will need to be replaced.

Due to the poor condition of the Siringo Road sewer and the available capacity between the Tony Anaya Building and Cerillos Road, it was determined that all flow in the area could be successfully re-routed to the Cerillos Road connection point, immediately to the south of the Tony Anaya Building. Replacement of the Siringo Road sewer line with a larger line was briefly considered, but determined to be cost prohibitive due to the length and location of pipe that would need to be replaced.

The total sewer base flow for future development was calculate to be 301 GPM and the peak flow was determined to be 426 GPM.

Option S1 Sewer Redesign
Due to issues with capacity of the southern sewer line it is recommended that the existing system within the campus be replaced with the intent of directing all flow towards the north, connecting to the main line on Cerrilos Rd. This diversion of flow will help alleviate the surcharging issues on the Siringo Road Sewer by diverting some of the existing flows to the north. The design analysis in Sewer CAD was used to design the proposed sewer lines with adequate slopes, depths, and capacity to accommodate the full build-out flow condition. **Exhibit 1** illustrates the proposed sewer line improvements. Due to the change of direction of the sewer, the existing sewer lines cannot be re-used, and it is recommended that all sewer lines in the improvement area be replaced with new lines. See **Exhibit 1** for the results of the sewer modelling, including depths, slopes, pipe diameters, and anticipated flows. See **Exhibit 2** for a layout of the proposed system compared to the existing system.

Option S1 Assumptions:

- Sewer is sized to service all lots of the proposed development
- Sewer shall provide gravity service to all of the proposed development
- Velocity in sewer lines shall be less than 10 ft/sec, and greater than 2.2 ft/sec
- The sewer analysis using SewerCAD is only taking into account the future development of the proposed project area, and not the city at-large
- Sewer design flow shall be at 50% full
- The 30" Silar Road interceptor is in need of repair, and it is assumed that this interceptor will be re-lined (Via CIPP) under this project

Option S1 Pros:

Option S1 will follow the existing and proposed roadways allowing sewer pipes found to be under existing facilities to be abandoned. This option also helps to alleviate the flow on the southern sewer that presently exceeds capacity. New sewers will be able to be installed in optimal locations to avoid existing utilities and provide service to buildings.

Option S1 Cons:

Construction costs for the project will be an extra cost versus using the existing system, however the existing system is currently overloaded and cannot be used for future midtown development. Current underground composition is unknown, and conditions may present the need for rock or undesirable material excavation. A geotechnical investigation is recommended before proceeding. Pavement cuts will be required for sections that will be under existing roadways. This option is an estimated $1.1 million in capital cost.

Option S2 – Do Nothing

When Wilson and Company and City of Santa Fe officials inspected manholes in May of 2022 it was discovered that sewer lines were full and flowing over the bench along the Siringo sewer. The additional demand from the development could cause additional surcharging of the manholes, overflows, and sewer backups affecting customers and residents. Continuing with the development without the sewer redesign is not a viable option.

Option S2 Assumptions:

- Existing sewers will be used
- Existing sewers are currently over capacity (field observation)
- Existing sewers are currently in poor condition, and run underneath existing buildings
- Lines will be installed in new roadways, no asphalt cost included in estimates

Option S2 Pros:

This option unfortunately does not have any benefits if chosen. Future development of the area would create demands the existing system cannot handle leading to potential environmental hazards.

Option S2 Cons:

The extra demands on the sewer system will likely lead to sewer backups affecting residents and businesses. The existing sewer system is not in ideal locations and will likely still need relocation

to fit within public right-of-way. This option was not evaluated further since the existing system is over capacity.

SECTION 6: RECOMMENDATION OF ALTERNATIVE

It is the opinion of the Engineer that Option 1 be selected for the water line, and Option 1 be selected for the sewer line. These options both allow for the full build out of future development while providing sufficient capacity and locating all new utilities in the public right-of-way. Additionally, Option 1 will improve existing conditions on the sewer lines, by re-directing flows away from an over-capacity sewer line. Approximate costs of the recommended alternates are listed below, see **Table 2** for a more detailed breakdown of the costs for each alternative.

	RECOMMENDED ALTERNATIVE	**ALTERNATIVE COST**
WATER	WATER OPTION 1	$ 820,180.33
SEWER	SEWER OPTION 1	$ 1,105,233.70
	SUBTOTAL PROJECTED COST:	**$ 1,925,414.03**
	NMGRT @ 8.625%:	**$ 166,066.96**
	20% CONTINGENCY:	**$ 385,082.81**
	GRAND TOTAL:	**$ 2,476,563.80**

5.4 Development Standards + Regulating Plan

This Section demonstrates where form-based development standards and allowed uses apply within the Midtown Site.

Development Standards Approach

To deliver the vision described in the Plan, each development parcel on the Midtown Site shall be controlled by a combination of Sub-zone Standards that control use and Facade Zone Standards that control building massing, and design. Both sets of standards have been coordinated and must be satisfied for each development parcel on the Midtown Site.

Sub-zone Standards. These standards apply to the entirety of each site onto which they are mapped, and control allowed uses.

Facade Zone Standards. These standards apply to the edges of each site that abut public rights-of-way, civic spaces, or public access easements such as paseos. They control elements such as setbacks, height stepbacks and required frontage types.

Regulating Plan

Figure 5.4.1 (Development Standards Regulating Plan) identifies the applicable Sub-zone Standards and Facade Zone Standards for each development site in the Midtown Site.

Where development sites are combined, the applicable standards identified in the Regulating Plan must be met.

Where the location of flexible rights-of-way and easements—such as paseos and living alleys—as identified by Figure 5.2.1 (Thoroughfare Regulating Plan), is adjusted, the applicable Facade Zone Standards indicated in Figure 5.4.1 (Development Standards Regulating Plan) shall apply to the right-of-way or easement in its new location, unless the new location represents a substantial change in context which merits a change in Facade Zone type, to be determined by the Land Use Director.

Where Civic Spaces are established, such as those identified by Figure 5.3.1 (Civic Space Regulating Plan), the Facade Zone(s) mapped at the location of the Civic Space in Figure 5.4.1 (Development Standards Regulating Plan) shall govern development along all edges of the Civic Space that are not bounded by thoroughfares.

5.5 Sub-zone Standards

This Section refines the palette of uses allowed in base zoning and the Midtown LINC Zoning Area by establishing an allowed palette of uses for the Midtown Site.

Use Standards

Table 5.5.A (Allowed Uses) sets forth the uses allowed and prohibited according to the Sub-zones established by Section 5.4 (Development Standards Regulating Plan) and are not impacted by adjacent Facade Zones (see 5.6 Facade Zone Standards). These regulations are based on the patterns of development and physical activities that comprise the principal and accessory uses of land, rather than on whether the activity is conducted for profit, not for profit or other purposes. Any specific use type not listed or included in the Table 5.5.A (Allowed Uses) is prohibited unless the Land Use Director determines that it is to be included in an existing use category.

The Midtown Site Sub-zones

The following Sub-zones apply in the Midtown Site:

- Mixed-Use Neighborhood (MU–N) provides for a variety of housing options.
- Mixed-Use Commercial (MU–C) provides opportunities for limited commercial uses such as retail, dining and entertainment while providing a variety of housing options on upper floors and along pedestrian paseos.
- Mixed-Use Office (MU–O) provides opportunities for service commercial uses as a transition between film production uses and residential uses.
- Mixed-Use Film (MU–F) provides for film production activities focused on the Garson Studios.
- Community-Oriented (CO) provides for civic uses such as libraries, education, performing arts, and other uses that serve the community.
- Open Space (OS) provides for publicly-accessible civic and open space.

Addendum E

CLIENT CONTRACT INFORMATION

© 2024 CBRE, Inc.

VALUATION & ADVISORY SERVICES

Proposal and Contract for Services

CBRE

CBRE, Inc.
2575 East Camelback Road
Ste 500
Phoenix, AZ 85016
www.cbre.us/valuation
Jo Dance, MAI, CCIM
Managing Director

December 6, 2023

Phillip Gesue
Midtown Santa Fe Productions QOF, LLC
1 Worth St, Suite 3F
New York, NY 10013
Phone: 917-892-0060
Email: pgesue@pereholdings.com

RE: Assignment Agreement | CB23US105690
Santa Fe College of Arts (portion of)
1600 St Michaels Dr
Santa Fe, NM 87505

Dear Mr. Gesue:

We are pleased to submit this proposal and our Terms and Conditions for this assignment.

PROPOSAL SPECIFICATIONS

Purpose:	To estimate the Market Value of the referenced real estate
Premise:	As Is
Rights Appraised:	Fee Simple
Intended Use:	Acquisition/Disposition/Exchange Due Diligence
Intended User:	The intended user is **Phillip Gesue & Midtown Santa Fe Productions QOF, LLC** ("Client"), and such other parties and entities (if any) expressly recognized by CBRE as "Intended Users" (as further defined herein).
Reliance:	Reliance on any reports produced by CBRE under this Agreement is extended solely to parties and entities expressly acknowledged in a signed writing by CBRE as Intended Users of the respective reports, provided that any conditions to such acknowledgement required by CBRE or hereunder have been satisfied. Parties or entities other than Intended Users who obtain a copy of the report or any portion thereof (including Client if it is not named as an Intended User), whether as a result of its direct dissemination or by any other means, may not rely upon any opinions or conclusions contained in the report or such portions thereof, and CBRE will not be responsible for any unpermitted use of the report, its conclusions or contents or have any liability in connection therewith.

Scope of Inspection: A full interior and exterior inspection of the property will be conducted and arranged with the property contact and performed by CBRE Valuations.

If this expected property inspection is not possible due to unforeseen issues (such as lack of on-site personnel cooperation, physical obstructions, or appraiser/property contact health and safety concerns), the client will be promptly advised. The client may continue this assignment based on other inspection options agreed upon by CBRE and client or provide CBRE with a written notice to cancel. If CBRE determines that a credible appraisal result cannot be achieved due to inspection limitations, it will promptly provide the client with a written cancellation of this assignment.

Valuation Approaches: The Cost and Sales Comparison Approaches to value will be considered.

Report Type: Restricted Appraisal Report
Appraisal Standards: USPAP
Appraisal Fee: $6,000.00. If cancelled by either party before a completion, the fee will be based on CBRE's hourly rates for the time expended; plus actual expenses.
Expenses: Fee includes all associated expenses
Retainer: A retainer of $6,000.00 is due prior to commencement of the outlined services.
Please remit retainer payments via wire to:

Name: Wells Fargo
ABA No.: 121000248
Swift ID: WFBIUS6S
Name on Account: CBRE Valuation Wire Receipts
General Account No.: 4121248561
Address: 420 Montgomery Street
San Francisco, CA 94104
Bank Contact: Michele Polcari
Telephone Number: (310) 606-4792

Please include the invoice number when submitting payment.

For additional payment remittance options, contact CBRE VAS Accounts Receivable - 901-620-3232 | **CBREVASAR@cbre.com**

Payment Terms: The full appraisal fee is considered earned upon delivery of the draft report.

Delivery Instructions:	CBRE encourages our clients to join in our environmental sustainability efforts by accepting an electronic copy of the report. An Adobe PDF file via email will be delivered to pgesue@pereholdings.com. The client has requested 0 bound final copy (ies).
Delivery Schedule:	
Preliminary Value:	Not Required
Draft Report:	15 business days after the Start Date
Final Report:	Upon Client's request
Start Date:	The appraisal process will start upon receipt of your signed agreement, the retainer, and the property specific data.
Acceptance Date:	These specifications are subject to modification if this proposal is not accepted within 5 business days from the date of this letter.

When executed and delivered by all parties, this letter, together with the Terms and Conditions and the Specific Property Data Request attached hereto and incorporated herein, will serve as the Agreement for appraisal services by and between CBRE and Client. Each person signing below represents that it is authorized to enter into this Agreement and to bind the respective parties, including all intended users, hereto.

We appreciate this opportunity to be of service to you on this assignment. If you have additional questions, please contact us.

Sincerely,

CBRE, Inc.
Valuation & Advisory Services



Jo Dance, MAI, CCIM
Managing Director
As Agent for CBRE, Inc.
T +1 6027355686
Jo.Dance@cbre.com

PROPERTY NAME	PROPERTY LOCATION	REPORT TYPE	APPRAISAL FEES
Santa Fe College of Arts (portion of)	1600 St Michaels Dr, Santa Fe, NM 87505	Restricted Appraisal Report	$6,000.00
Assignment Total:			$6,000.00

AGREED AND ACCEPTED

FOR PHILLIP GESUE & MIDTOWN SANTA FE PRODUCTIONS QOF, LLC ("CLIENT"):

phillip gesue	12.20.2023
Signature	Date
Phillip Gesue	
Name	Title
917-892-0060	pgesue@pereholdings.com
Phone Number	E-Mail Address

ADDITIONAL OPTIONAL SERVICE

Assessment & Consulting Services: CBRE's Assessment & Consulting Services group has the capability of providing a wide array of solution-oriented due diligence services in the form of property condition and environmental site assessment reports and other necessary due diligence service (seismic risk analysis, zoning compliance service, construction risk management, annual inspections, etc.).

Initial below if you desire CBRE to contact you to discuss a proposal for any part or the full complement of consulting services, or you may reach out to us at **ACSProposals@cbre.com**. We will route your request to the appropriate manager. For more information, please visit www.cbre.com/assessment.

TERMS AND CONDITIONS

1. The Terms and Conditions herein are part of an agreement for appraisal services (the "Agreement") between CBRE, Inc. (the "Appraiser") and the client signing this Agreement, and for whom the appraisal services will be performed (the "Client"), and shall be deemed a part of such Agreement as though set forth in full therein. The Agreement shall be governed by the laws of the state where the appraisal office is located for the Appraiser executing this Agreement.
2. Client shall be responsible for the payment of all fees stipulated in the Agreement. Payment of the appraisal fee and preparation of an appraisal report (the "Appraisal Report, or the "report") are not contingent upon any predetermined value or on an action or event resulting from the analyses, opinions, conclusions, or use of the Appraisal Report. Final payment is due as provided in the Proposal Specifications Section of this Agreement. If a draft report is requested, the fee is considered earned upon delivery of the draft report. It is understood that the Client may cancel this assignment in writing at any time prior to delivery of the completed report. In such event, the Client is obligated only for the hourly rate of the time and expenses incurred (including travel expenses to and from the engagement site), with a minimum charge of $500. Additional copies of the Appraisal Reports are available at a cost of $250 per original color copy and $100 per photocopy (black and white), plus shipping fees of $30 per report.
3. If Appraiser is subpoenaed or ordered to give testimony, produce documents or information, or otherwise required or requested by Client or a third party to participate in meetings, phone calls, conferences, litigation or other legal proceedings (including preparation for such proceedings) because of, connected with or in any way pertaining to this engagement, the Appraisal Report, the Appraiser's expertise, or the Property, Client shall pay Appraiser's additional costs and expenses, including but not limited to Appraiser's attorneys' fees, and additional time incurred by Appraiser based on Appraiser's then-prevailing hourly rates and related fees. Such charges include and pertain to, but are not limited to, time spent in preparing for and providing court room testimony, depositions, travel time, mileage and related travel expenses, waiting time, document review and production, and preparation time (excluding preparation of the Appraisal Report), meeting participation, and Appraiser's other related commitment of time and expertise. Hourly charges and other fees for such participation will be provided upon request. In the event Client requests additional appraisal services beyond the scope and purpose stated in the Agreement, Client agrees to pay additional fees for such services and to reimburse related expenses, whether or not the completed report has been delivered to Client at the time of such request.
4. Appraiser shall have the right to terminate this Agreement at any time for cause effective immediately upon written notice to Client on the occurrence of fraud or the willful misconduct of Client, its employees or agents, or without cause upon 5 days written notice.
5. In the event Client fails to make payments when due then, from the date due until paid, the amount due and payable shall bear interest at the maximum rate permitted in the state where the office is located for the Appraiser executing the Agreement. In the event either party institutes legal action against the other to enforce its rights under this Agreement, the prevailing party shall be entitled to recover its reasonable attorney's fees and expenses. Each party waives the right to a trial by jury in any action arising under this Agreement.
6. Appraiser assumes there are no major or significant items or issues affecting the Property that would require the expertise of a professional building contractor, engineer, or environmental consultant for Appraiser to prepare a valid report. Client acknowledges that such additional expertise is not covered in the Appraisal fee and agrees that, if such additional expertise is required, it shall be provided by others at the discretion and direction of the Client, and solely at Client's additional cost and expense.
7. In the event of any dispute between Client and Appraiser relating to this Agreement, or Appraiser's or Client's performance hereunder, Appraiser and Client agree that such dispute shall be resolved by means of binding arbitration in accordance with the commercial arbitration rules of the American Arbitration Association, and judgment upon the award rendered by an arbitrator may be entered in any court of competent jurisdiction. Depositions may be taken and other discovery obtained during such arbitration proceedings to the same extent as authorized in civil judicial proceedings in the state where the office of the Appraiser executing this Agreement is located. The arbitrator shall be limited to awarding compensatory damages and shall have no authority to award punitive, exemplary or similar damages. The prevailing party in the arbitration proceeding shall be entitled to recover its expenses from the losing party, including costs of the arbitration proceeding, and reasonable attorney's fees. Client acknowledges that Appraiser is being retained hereunder as an independent contractor to perform the services described herein and nothing in this Agreement shall be deemed to create any other relationship between

Client and Appraiser. This engagement shall be deemed concluded and the services hereunder completed upon delivery to Client of the Appraisal Report discussed herein.

8. All statements of fact in the report which are used as the basis of the Appraiser's analyses, opinions, and conclusions will be true and correct to Appraiser's actual knowledge and belief. Appraiser does not make any representation or warranty, express or implied, as to the accuracy or completeness of the information or the condition of the Property furnished to Appraiser by Client or others. TO THE FULLEST EXTENT PERMITTED BY LAW, APPRAISER DISCLAIMS ANY GUARANTEE OR WARRANTY AS TO THE OPINIONS AND CONCLUSIONS PRESENTED ORALLY OR IN ANY APPRAISAL REPORT, INCLUDING WITHOUT LIMITATION ANY WARRANTY OF FITNESS FOR ANY PARTICULAR PURPOSE EVEN IF KNOWN TO APPRAISER. Furthermore, the conclusions and any permitted reliance on and use of the Appraisal Report shall be subject to the assumptions, limitations, and qualifying statements contained in the report.
9. Appraiser shall have no responsibility for legal matters, including zoning, or questions of survey or title, soil or subsoil conditions, engineering, or other similar technical matters. The report will not constitute a survey of the Property analyzed.
10. Client shall provide Appraiser with such materials with respect to the assignment as are requested by Appraiser and in the possession or under the control of Client. Client shall provide Appraiser with sufficient access to the Property to be analyzed, and hereby grants permission for entry unless discussed in advance to the contrary.
11. The data gathered in the course of the assignment (except data furnished by Client) and the report prepared pursuant to the Agreement are, and will remain, the property of Appraiser. With respect to data provided by Client, Appraiser shall not violate the confidential nature of the Appraiser-Client relationship by improperly disclosing any proprietary information furnished to Appraiser. Notwithstanding the foregoing, Appraiser is authorized by Client to disclose all or any portion of the report and related data as may be required by statute, government regulation, legal process, or judicial decree, including to appropriate representatives of the Appraisal Institute if such disclosure is required to enable Appraiser to comply with the Bylaws and Regulations of such Institute as now or hereafter in effect.
12. Unless specifically noted, in preparing the Appraisal Report the Appraiser will not be considering the possible existence of asbestos, PCB transformers, or other toxic, hazardous, or contaminated substances and/or underground storage tanks (collectively, "Hazardous Material) on or affecting the Property, or the cost of encapsulation or removal thereof. Further, Client represents that there is no major or significant deferred maintenance of the Property that would require the expertise of a professional cost estimator or contractor. If such repairs are needed, the estimates are to be prepared by others, at Client's discretion and direction, and are not covered as part of the Appraisal fee.
13. In the event Client intends to use the Appraisal Report in connection with a tax matter, Client acknowledges that Appraiser provides no warranty, representation or prediction as to the outcome of such tax matter. Client understands and acknowledges that any relevant taxing authority (whether the Internal Revenue Service or any other federal, state or local taxing authority) may disagree with or reject the Appraisal Report or otherwise disagree with Client's tax position, and further understands and acknowledges that the taxing authority may seek to collect additional taxes, interest, penalties or fees from Client beyond what may be suggested by the Appraisal Report. Client agrees that Appraiser shall have no responsibility or liability to Client or any other party for any such taxes, interest, penalties or fees and that Client will not seek damages or other compensation from Appraiser relating to any such taxes, interest, penalties or fees imposed on Client, or for any attorneys' fees, costs or other expenses relating to Client's tax matters.
14. Appraiser shall have no liability with respect to any loss, damage, claim or expense incurred by or asserted against Client arising out of, based upon or resulting from Client's failure to provide accurate or complete information or documentation pertaining to an assignment ordered under or in connection with this Agreement, including Client's failure, or the failure of any of Client's agents, to provide a complete copy of the Appraisal Report to any third party.
15. LIMITATION OF LIABILITY. EXCEPT TO THE EXTENT ARISING FROM SECTION 16 BELOW, OR SECTION 17 IF APPLICABLE, IN NO EVENT SHALL EITHER PARTY OR ANY OF ITS AFFILIATE, OFFICERS, DIRECTORS, EMPLOYEES, AGENTS, OR CONTRACTORS BE LIABLE TO THE OTHER, WHETHER BASED IN CONTRACT, WARRANTY, INDEMNITY, NEGLIGENCE, STRICT LIABILITY OR OTHER TORT OR OTHERWISE, FOR ANY SPECIAL, CONSEQUENTIAL, PUNITIVE, INCIDENTAL OR INDIRECT DAMAGES, AND AGGREGATE DAMAGES IN CONNECTION WITH THIS AGREEMENT FOR EITHER PARTY (EXCLUDING THE OBLIGATION TO PAY THE FEES REQUIRED HEREUNDER) SHALL NOT EXCEED THE GREATER OF THE TOTAL FEES PAYABLE TO APPRAISER UNDER THIS AGREEMENT OR TEN THOUSAND DOLLARS ($10,000). THIS LIABILITY LIMITATION SHALL NOT APPLY IN THE EVENT OF A FINAL FINDING BY AN ARBITRATOR OR A COURT OF COMPETENT JURISDICTION THAT SUCH LIABILITY IS THE RESULT OF A PARTY'S FRAUD OR WILLFUL MISCONDUCT.

16. Client shall not disseminate, distribute, make available or otherwise provide any Appraisal Report prepared hereunder to any third party (including without limitation, incorporating or referencing the Appraisal Report , in whole or in part, in any offering or other material intended for review by other parties) except to (i) any third party expressly acknowledged in a signed writing by Appraiser as an "Intended User" of the Appraisal Report provided that either Appraiser has received an acceptable release from such third party with respect to such Appraisal Report or Client provides acceptable indemnity protections to Appraiser against any claims resulting from the distribution of the Appraisal Report to such third party, (ii) any third party service provider (including rating agencies and auditors) using the Appraisal Report in the course of providing services for the sole benefit of an Intended User, or (iii) as required by statute, government regulation, legal process, or judicial decree. In the event Appraiser consents, in writing, to Client incorporating or referencing the Appraisal Report in any offering or other materials intended for review by other parties, Client shall not distribute, file, or otherwise make such materials available to any such parties unless and until Client has provided Appraiser with complete copies of such materials and Appraiser has approved all such materials in writing. Client shall not modify any such materials once approved by Appraiser. In the absence of satisfying the conditions of this paragraph with respect to a party who is not designated as an Intended User, in no event shall the receipt of an Appraisal Report by such party extend any right to the party to use and rely on such report, and Appraiser shall have no liability for such unauthorized use and reliance on any Appraisal Report. In the event Client breaches the provisions of this paragraph, Client shall indemnify, defend and hold Appraiser, and its affiliates and their officers, directors, employees, contractors, agents and other representatives (Appraiser and each of the foregoing an "Indemnified Party" and collectively the "Indemnified Parties"), fully harmless from and against all losses, liabilities, damages and expenses (collectively, "Damages") claimed against, sustained or incurred by any Indemnified Party arising out of or in connection with such breach, regardless of any negligence on the part of any Indemnified Party in preparing the Appraisal Report.

17. Furthermore, Client shall indemnify, defend and hold each of the Indemnified Parties harmless from and against any Damages in connection with (i) any transaction contemplated by this Agreement or in connection with the appraisal or the engagement of or performance of services by any Indemnified Party hereunder, (ii) any Damages claimed by any user or recipient of the Appraisal Report, whether or not an Intended User, (iii) any actual or alleged untrue statement of a material fact, or the actual or alleged failure to state a material fact necessary to make a statement not misleading in light of the circumstances under which it was made with respect to all information furnished to any Indemnified Party or made available to a prospective party to a transaction, or (iv) an actual or alleged violation of applicable law by an Intended User (including, without limitation, securities laws) or the negligent or intentional acts or omissions of an Intended User (including the failure to perform any duty imposed by law); and will reimburse each Indemnified Party for all reasonable fees and expenses (including fees and expenses of counsel) (collectively, "Expenses") as incurred in connection with investigating, preparing, pursuing or defending any threatened or pending claim, action, proceeding or investigation (collectively, "Proceedings") arising therefrom, and regardless of whether such Indemnified Party is a formal party to such Proceeding. Client agrees not to enter into any waiver, release or settlement of any Proceeding (whether or not any Indemnified Party is a formal party to such Proceeding) without the prior written consent of Appraiser (which consent will not be unreasonably withheld or delayed) unless such waiver, release or settlement includes an unconditional release of each Indemnified Party from all liability arising out of such Proceeding.

18. Time Period for Legal Action. Unless the time period is shorter under applicable law, except in connection with paragraphs 16 and 17 above, Appraiser and Client agree that any legal action or lawsuit by one party against the other party or its affiliates, officers, directors, employees, contractors, agents, or other representatives, whether based in contract, warranty, indemnity, negligence, strict liability or other tort or otherwise, relating to (a) this Agreement or the Appraisal Report, (b) any services or appraisals under this Agreement or (c) any acts or conduct relating to such services or appraisals, shall be filed within two (2) years from the date of delivery to Client of the Appraisal Report to which the claims or causes of action in the legal action or lawsuit relate. The time period stated in this section shall not be extended by any incapacity of a party or any delay in the discovery or accrual of the underlying claims, causes of action or damages.

Addendum F

QUALIFICATIONS

© 2024 CBRE, Inc.



VALUATION & ADVISORY SERVICES / WEST DIVISION

Ian Valenzuela, MAI

Vice President, Albuquerque, NM
6100 Uptown Boulevard, Albuquerque, NM 87110
T +1 505 837 4931
M +1 505 710 0080
F + 505 837 4994
E ian.valenzuela@cbre.com

Professional Experience

Ian Valenzuela is a Vice President with the CBRE Valuation & Advisory Group. Ian has over 28 years of experience as a real estate appraiser, receiving his General Appraiser Certification in 2000, and the MAI designation from the Appraisal Institute in 2014. Ian has extensive experience in the New Mexico commercial real estate market, and has a comprehensive understanding of market trends and analysis. Ian has worked on a wide variety of valuation projects throughout New Mexico for a broad spectrum of property types including: self-storage, multi family, right of way, office, industrial, retail, residential and commercial subdivisions, auto dealerships, service stations, restaurants, hotels and motels, mixed-use properties and specialty property types such as car washes, recreational properties, worship facilities, and government offices. Assignments have included market value appraisals, market rent studies, ad veloram tax appraisals, right of way valuation, and highest and best use analysis. Ian has worked for private local appraisal firms including Roos and Owens Appraisal Service in Rio Rancho, NM, and American Property Consultants in Albuquerque, NM, as well as the Sandoval County Assessor's Office, and as a Senior Appraiser at Grubb & Ellis / Collier's International.

Ian's background in and experience and Appraisal allows him to provide his clients with the most in-depth, up-to-date information on how market conditions will affect the value of their property. He is an expert at leveraging the full portfolio of CBRE resources to ensure that his clients have all the information needed to make an informed decision.

Ian has a bachelor's degree in University Studies, with an emphasis in real estate and statistics, from the University of New Mexico. His professional education consists of classes from the Appraisal Institute including: General Applications, Apartment Appraisal, Advanced Income Capitalization, Report Writing & Valuation Analysis, Highest and Best Use/ Market Analysis, Advanced Applications, Comparative Analysis, Marketability Studies, Real Estate Finance Statistics & Modeling, Advanced Spreadsheet Modeling, Condemnation Appraising, Case Studies in Complex Valuation, Property Rights & Implications in Valuation. Ian received the MAI designation from the Appraisal Institute in 2014.

Clients Represented

- New Mexico DOT
- Greater ABQ Housing
- Main Bank
- Bank 34
- City of Rio Rancho
- City of Albuquerque
- City of Gallup
- Bernalillo County
- Sandoval County
- McKinley County
- Pinnacle Bank
- U.S. Bank
- Bank of New Mexico
- Nat Hispanic Cult. Ctr.
- First Citizens Bank
- Bank of the West

Affiliations / Accreditations

- Appraisal Institute,
  - Designated Member (MAI)
  - President of the Rio Grande Chapter- 2023
- Certified General Real Estate Appraiser
  - New Mexico NO.01734-G

Education

- University of New Mexico, Albuquerque, Bachelor of University Studies

©2023 CBRE, INC.

THIS IS TO CERTIFY THAT

Ian R. Valenzuela

Real Estate Appraisers Board

is licensed / registered by the New Mexico Regulation and Licensing Department in accordance with provisions of laws in the State of New Mexico

License / Registration No.	License / Registration Type
01734-G	General Certified Appraiser

Issue Date	Expiration Date
12/19/2000	4/30/2025

The bearer is prohibited by law from using this identification card to give the impression that they are in any way connected with a governmental agency

Signature of holder

Ian R. Valenzuela
6212 Christy Ave. NE
Albuquerque, NM 87109

State of New Mexico

NMRLD
NEW MEXICO
REGULATION &
LICENSING DEPARTMENT

Real Estate Appraisers Board

HEREBY CERTIFIES THAT

Ian R. Valenzuela

HAVING GIVEN SATISFACTORY EVIDENCE OF THE COMPLETION OF PROFESSIONAL AND OTHER REQUIREMENTS PRESCRIBED BY LAW IS GRANTED A LICENSE TO PRACTICE IN THE STATE OF NEW MEXICO

General Certified Appraiser

License No. 01734-G Issued 12/19/2000 Expires 4/30/2025

THIS LICENSE SHOULD BE CONSPICUOUSLY POSTED IN PLACE OF BUSINESS OR AS REQUIRED BY LAW

APPRAISAL OF
1600 ST. MICHAELS DRIVE
MIDTOWN STUDIOS (PERE)
SANTA FE, NM 87505

DATE OF THE REPORT
MARCH 4, 2024

EFFECTIVE DATE OF VALUATION
NOVEMBER 15, 2023

PREPARED FOR
RICHARD BROWN
200 LINCOLN AVENUE
SANTA FE, NEW MEXICO 87504

HIPPAUF DRY CONNELLY
REAL ESTATE APPRAISERS AND CONSULTANTS

HIPPAUF DRY & CONNELLY
REAL ESTATE APPRAISERS AND CONSULTANTS

Peter H. Hippauf, Emeritus
Michael Dry, MAI
Tim Connelly, MAI

404 Brunn School Rd., Bldg. B
Santa Fe, New Mexico 87505
(505) 988-8059
FAX: (505) 988-5743
www.hippauf.com

March 4, 2024

Richard Brown
c/o Lee Logston
200 Lincoln Avenue
Santa Fe, New Mexico 87504

RE:	Appraisal of 1600 St. Michaels Drive, Santa Fe, NM 87505

Dear Mr. Logston;

Pursuant to your request, I have completed the appraisal of the above referenced property. The depth of discussion and supporting documentation contained in this report are specific, expressed requirements of the client. This appraisal was prepared in accordance with the Uniform Standards of Professional Appraisal Practice (USPAP) 2024 and is subject to the assumptions and limiting conditions described in the report.

Based on the data and analyses contained in this report, it is my opinion the most probable fee simple market value (subject to extraordinary assumptions, easements and restrictions of record) in the subject property 'as is' as of November 15, 2023 is:

FINAL VALUE

Subject: Midtown Studios Pere		
Market Value	**Fee Simple**	**Eleven Million Four Hundred Thousand Dollars $11,400,000**

Extraordinary Assumptions
The property is subject to at least two City of Santa Fe Resolutions (No. 2018-54 and 2022-12), which result in the proposed, and now assumed, rezoning from a R-5 Residential Zone to a C-2 General Commercial District. If this assumption should prove to be inaccurate, the subject's value could be impacted.
The property has had two Phase 1 and one Phase 2 Environmental Site Assessment Reports completed and it is assumed any and all environmental concerns were addressed. If this assumption should prove to be inaccurate, the subject's value could be impacted.
The subject has excess land. No survey or engineering report has been provided to the appraiser to calculate the excess land. The appraiser has utilized lot coverage ratios in order to produce an amount of excess land. If this assumption should prove to be inaccurate, the subject's value could be impacted.
According to the appraiser the Driscoll structure should be converted into a soundstage with the remaining space used as supportive office. There have been some structural issues identified that could make the conversion of the building inappropriate. If the structure is found to be structurally adequate or financially feasible to be renovated to be adequate, the results of this appraisal are subject to change.
Note: If these assumptions should prove inaccurate, the subject's value could be impacted.

The attached appraisal report contains 107 pages plus addenda. If I can be of any further service with this appraisal or another matter, please do not hesitate to contact me.

Respectfully submitted,



Tim Connelly, MAI
N. M. General Certificate #3225G

Table of Contents

SUMMARY OF SALIENT FACTS, DATA AND CONCLUSIONS 1

CERTIFICATION 4

ASSUMPTIONS AND LIMITING CONDITIONS 5

INTRODUCTION 7

DESCRIPTION OF REAL ESTATE APPRAISED 16

Location Description – City 16

Location Description – Neighborhood 19

Legal Use of the Property 20

Property Description 25

Site 25
Environmental Site Assessment 27
Excess Land Calculation 28
Improvements 30

HIGHEST AND BEST USE 42

Highest and Best Use As Vacant 42

Highest and Best Use as Improved 44

VALUATION 46

Benildus - Sales Comparison Approach 48
Benildus - Income Approach 61
Benildus - Reconciliation of Preliminary Values 77
Final Value Benildus 79
Garson Studios – Case Study – Sales Comparison Approach 80
Garson Studios - Income Approach 81
Garson Studios - Reconciliation and Preliminary Value Conclusion 88
Final Value Garson Studios 90
Driscoll – Income Approach 91
Excess Land - Sales Comparison Approach 95
Final Value 107

Addenda

SUMMARY OF SALIENT FACTS, DATA AND CONCLUSIONS

Summary		
Property Location	1600 St. Michaels Drive, Santa Fe, NM 87505	
Client	Richard Brown	
Current Use	Commercial – Mixed Use	
Owner of Record	City of Santa Fe	
Highest and Best Use	'As Is': Commercial – with all structures related to film and media production.	
Dates	Effective Date of Valuation	November 15, 2023
	Date of Report	March 4, 2024
Purpose of the Appraisal	Market value estimate for potential lease/sale	
Intended Use of the Appraisal	Asset valuation for negotiation of potential lease/sale	
Intended User of the Appraisal	City of Santa Fe, Office of Economic Development	
Land Area	533,153 square feet or 12.24 acres ±	
	Source: Request for Fee Proposal: Land Valuation for Development and Appraisal of City-Owned Real Estate	
Gross Building Area	**Unit**	**Size (Square feet)**
	Garson Studios	49,200
	Driscoll	22,200
	Benildus Hall	27,757
Legal Use	Zoning: C-2 (General Commercial District) & Midtown Local Innovation Corridor (Midtown LINC) Overlay District	

1600 St. Michaels Drive, Midtown Studios Pere

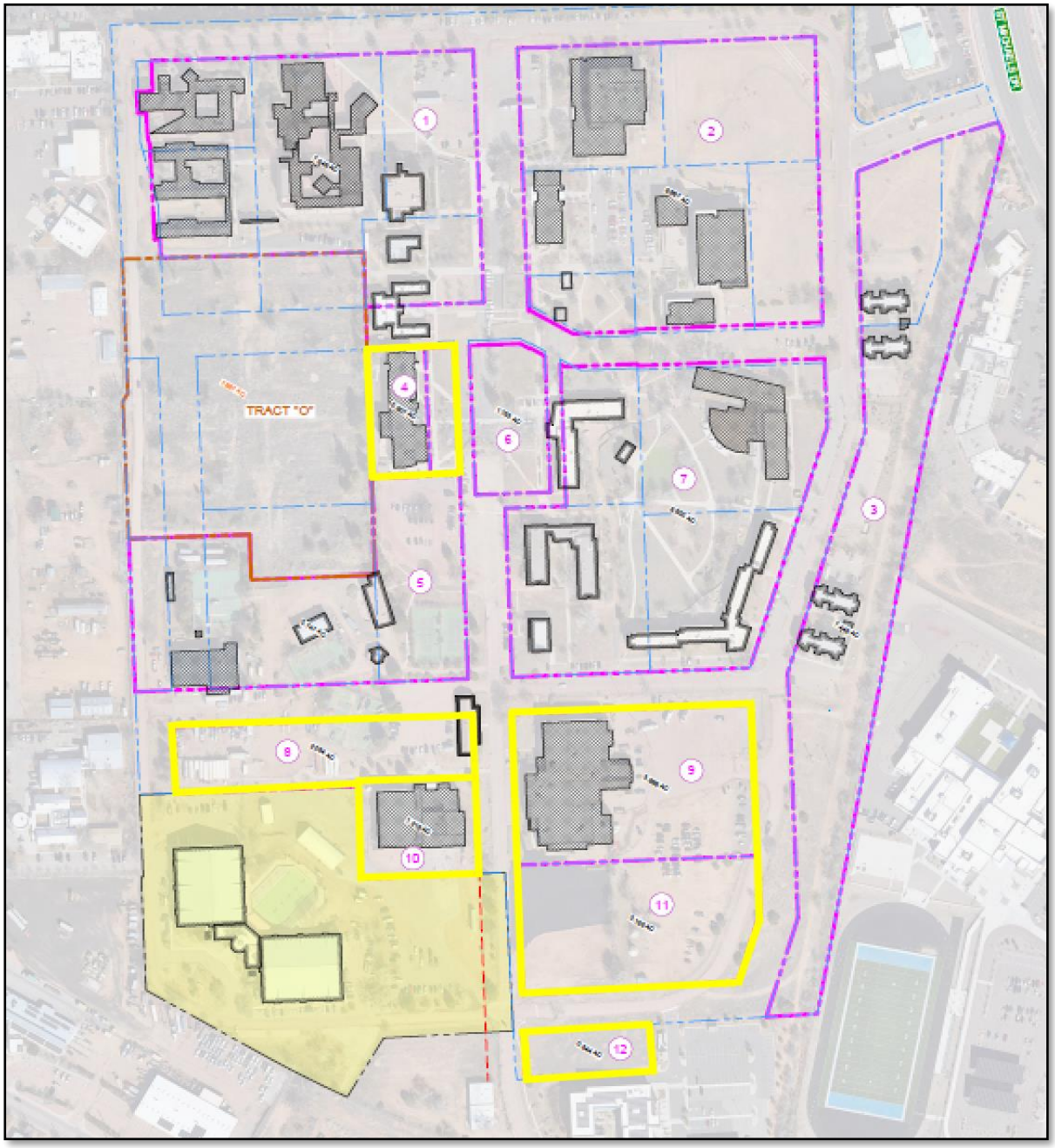

The subject is approximated on the aerial photograph by representatives from the City of Santa Fe

VALUE INDICATIONS

Component	Value
Benildus Hall - Office	$2,590,000
Garson Studios – Soundstage/Office	$6,100,000
Driscoll – (future) Soundstage/Office	$950,000
Excess land	$1,760,000
Final Value	**$11,400,000**

Extraordinary Assumptions
The property is subject to at least two City of Santa Fe Resolutions (No. 2018-54 and 2022-12), which result in the proposed, and now assumed, rezoning from a R-5 Residential Zone to a C-2 General Commercial District. If this assumption should prove to be inaccurate, the subject's value could be impacted.
The property has had two Phase 1 and one Phase 2 Environmental Site Assessment Reports completed and it is assumed any and all environmental concerns were addressed. If this assumption should prove to be inaccurate, the subject's value could be impacted.
The subject has excess land. No survey or engineering report has been provided to the appraiser to calculate the excess land. The appraiser has utilized lot coverage ratios in order to produce an amount of excess land. If this assumption should prove to be inaccurate, the subject's value could be impacted.
According to the appraiser the Driscoll structure should be converted into a soundstage with the remaining space used as supportive office. There have been some structural issues identified that could make the conversion of the building inappropriate. If the structure is found to be structurally adequate or financially feasible to be renovated to be adequate, the results of this appraisal are subject to change.
Note: If these assumptions should prove inaccurate, the subject's value could be impacted.

CERTIFICATION

I certify that, to the best of my knowledge and belief:

- The statements of fact contained in this report are true and correct
- The reported analyses, opinions, and conclusions are limited only by the reported assumptions and limiting conditions, and are my personal, impartial and unbiased professional analyses, opinions, and conclusions
- I have no present or prospective interest in the property that is the subject of this report and no personal interest with respect to the parties involved
- I have performed no services, as an appraiser or in any other capacity, regarding the property that is the subject of this report within the three-year period immediately preceding acceptance of this assignment
- I have no bias with respect to the property that is the subject of this report or to the parties involved with this assignment. I completed real estate consulting work on a neighboring property of the subject. This work was completed for parties that are the potential purchaser of the subject of this report.
- My engagement in this assignment was not contingent upon developing or reporting predetermined results
- My compensation for completing this assignment is not contingent upon the development or reporting of a predetermined value or direction in value that favors the cause of the client, the amount of the value opinion, the attainment of a stipulated result, or the occurrence of a subsequent event directly related to the intended use of this appraisal
- My analyses, opinions, and conclusions were developed, and this report has been prepared, in conformity with the *Uniform Standards of Professional Appraisal Practice*
- I have made a personal inspection of the property that is the subject of this report
- I have personal knowledge of all comparable properties referenced within this report
- The use of this appraisal report is subject to the requirements of the Appraisal Institute relating to review by its duly authorized representatives
- Suzanna Denison provided significant real property appraisal assistance to the person signing this certification. Suzanna assisted with the property inspection, introduction and description sections and overall formatting of the report.
- The reported analyses, opinions, and conclusions were developed, and this report has been prepared, in conformity with the Code of Professional Ethics and Standards of Professional Appraisal Practice of the Appraisal Institute
- The use of this report is subject to the requirements of the Appraisal Institute relating to review by its duly authorized representatives
- As of the date of this report, Tim Connelly has completed the continuing education program for Designated Members of the Appraisal Institute
- As of the date of this report, Tim Connelly has completed the requirements for the continuing education program of the State of New Mexico Real Estate Appraisers Board for General Certification.
- Tim Connelly has the education, knowledge, experience, resources, and geographic competency to appraise a property of this type in this location
- My certification and any professional designations are currently valid, in good standing and not subject to any restrictions or pending actions/sanctions
- The appraisal has been completed in accordance with the Clients Engagement Requirements

Certified by,

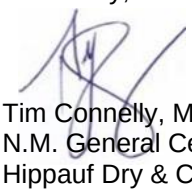

Tim Connelly, MAI
N.M. General Certificate #03225G
Hippauf Dry & Connelly
404 Brunn School Road, Building B
Santa Fe, NM 87505
EIN #82-3614121

ASSUMPTIONS AND LIMITING CONDITIONS

This appraisal report has been prepared with the following specific assumptions:

1. It is assumed that the supporting documentation provided for the appraisal is correct.
2. I have relied on information prepared by licensed professionals in making certain decisions in the process of this appraisal. I have accepted this information as accurate, based on the fact that they represent matters beyond my expertise as an appraiser along with the fact that they were prepared by recognized professionals.

This report has been made with the following general assumptions:

3. No responsibility is assumed for the legal description or for matters including legal or title considerations. Title to the property is assumed to be good and marketable unless otherwise stated.
4. The property is appraised free and clear of any or all liens or encumbrances unless otherwise stated.
5. Responsible ownership and competent property management are assumed.
6. The information furnished by others is believed to be reliable. However, no warranty is given for its accuracy.
7. All engineering is assumed to be correct. The plot plans and illustrative material in this report are included only to assist the reader in visualizing the property.
8. It is assumed that there are no hidden or unapparent conditions of the property, subsoil or structures that render it more or less valuable. No responsibility is assumed for such conditions or for arranging engineering studies that may be required to discover them.
9. It is assumed that there is full compliance with all applicable federal, state, and local environmental regulations and laws unless noncompliance is stated, defined, and considered in the report.
10. It is assumed that all applicable zoning and use regulations and restrictions have been complied with, unless a nonconforming use has been stated, defined, and considered in the report. Please refer to the discussion of zoning found within the report.
11. It is assumed that all required licenses, permits, certificates of occupancy, consents, or other legislative or administrative authority from any local, state, or national government or private entity or organization have been or can be obtained or renewed for any use on which the value estimate contained in this report is based.
12. It is assumed that the utilization of the land and improvements is within the boundaries or property lines of the property described and that there is no encroachment or trespass unless noted in the report.
13. Unless otherwise stated in this report, the existence of hazardous substances, including, without limitation, asbestos, polychlorinated biphenyls, petroleum leakage, or agricultural chemicals, which may or may not be present on the property, or other environmental conditions, were not called to my attention nor did I become aware of such during the inspection. I have no knowledge of the existence of such materials on or in the property unless otherwise stated. However, I am not qualified to test such substances or conditions. If the presence of such substances, such as asbestos, urea formaldehyde foam insulation, or other hazardous substances or environmental conditions, may affect the value of the property, the value estimated is predicated on the assumption that there is no condition on or in the property or in such proximity thereto that it would cause a loss in value. No responsibility is assumed for any such condition, or for any expertise or engineering knowledge required to discover them.
14. Unless otherwise stated in this report, the subject property is appraised without a specific compliance survey having been conducted to determine if the property is or is not in conformance with the requirements of the Americans with Disabilities Act. The presence of architectural and communications barriers that are structural in nature that would restrict access by disabled individuals may adversely affect the property's value, marketability, or utility.

The report has been prepared with the following limiting conditions:

15. The conclusions expressed in this appraisal report apply only as of the stated date of the appraisal and I assume no responsibility for economic or physical factors occurring at some

later date which may affect the opinions stated herein.

16. The distribution, if any, of the total valuation in this report between land and improvements applies only under the stated program of utilization.
17. By reason of the assignment, I am not required to give consultation, testimony, or be in attendance in court or any other hearing with reference to the property unless written contractual arrangements have been previously made relative to such additional services.
18. Disclosure of the contents of the report is subject to the requirements of the Appraisal Institute relating to review by its duly authorized representatives.
19. Neither all, nor any part of this report, or copy thereof shall be used for any purposes by anyone other than the client to which the report is addressed without the prior written consent of the appraiser, nor shall it be conveyed by anyone to the public through advertising, public relations, news, sales, or other media, or any other means of communication (including without limitation prospectus, private offering memoranda and other offering material provided to prospective investors) without the prior written consent of the appraiser.

Extraordinary Assumptions
The property is subject to at least two City of Santa Fe Resolutions (No. 2018-54 and 2022-12), which result in the proposed, and now assumed, rezoning from a R-5 Residential Zone to a C-2 General Commercial District. If this assumption should prove to be inaccurate, the subject's value could be impacted.
The property has had two Phase 1 and one Phase 2 Environmental Site Assessment Reports completed and it is assumed any and all environmental concerns were addressed. If this assumption should prove to be inaccurate, the subject's value could be impacted.
The subject has excess land. No survey or engineering report has been provided to the appraiser to calculate the excess land. The appraiser has utilized lot coverage ratios in order to produce an amount of excess land. If this assumption should prove to be inaccurate, the subject's value could be impacted.
According to the appraiser the Driscoll structure should be converted into a soundstage with the remaining space used as supportive office. There have been some structural issues identified that could make the conversion of the building inappropriate. If the structure is found to be structurally adequate or financially feasible to be renovated to be adequate, the results of this appraisal are subject to change.
Note: If these assumptions should prove inaccurate, the subject's value could be impacted.

INTRODUCTION

Appraisal Report: This is an Appraisal Report which is intended to comply with the reporting requirements set forth under Standards Rule 2-2(a) of the Uniform Standards of Professional Appraisal Practice 2024. The report and the level of information in the report are based on the needs of the client.

Property Identification: The subject of the appraisal is comprised of commercial – mixed use of offices, film studios, and a former gymnasium/fitness center located on multiple tracks located at 1600 St. Michaels Drive, Santa Fe, NM 87505. This is a portion of the property formerly known as the Santa Fe University of Art & Design.

Property Ownership and History:

Property	Current Owner
1600 St. Michaels Drive	City of Santa Fe
Comments	
The subject property is currently vested in the name of City of Santa Fe, who acquired title to the property in September 2009.	

The subject property has a longstanding history in the City of Santa Fe. Originally founded as St. Michael's College in 1859 by four brothers of the De La Salle Christian order as a Catholic facility, it grew to include secondary and higher education. In 1947, the property expanded when an adjacent portion of the abandoned Bruns Army Hospital, including army barracks used during World War II, was purchased by the College of Christian Brothers of New Mexico. In 1966, the subject was renamed the College of Santa Fe and in 1985, the Santa Fe Art Institute opened on the campus.

In September of 2009, the City of Santa Fe purchased the college from the Christian Brothers for $19,500,000 and signed a 26-year lease with the for-profit educational company Laureate Education, who relaunched the school as Santa Fe University of Art and Design. During the summer of 2018, the Santa Fe University of Art and Design gave notice that they would be vacating the facility due to financial difficulties.

Since 2020, the City of Santa Fe has initiated large-scale redevelopment plans for the subject property and film studio production began in earnest with most useable buildings leased with annual terms for film productions. In March of 2022, the adjacent

8.6-acre Shellaberger Tennis Center was purchased for $6.7 million by PE Real Estate Holdings and converted into sound stages and film production warehouses.

In February of 2023, a community development plan to address affordable housing, arts, film, and library with educational programming was approved after a series of public meetings. In March of 2023, the Midtown Studios Film Productions/PE Real Estate Holdings, the current tenants, submitted a proposal for redevelopment and expansion of the subject property as a “Studio Village” through a Request for Proposals initiated from the City of Santa Fe. It is the understanding of this appraiser that the sole bidder in this project is now in negotiations with the City to purchase the property that is the subject of this report. A copy of the Purchase Agreement was not provided to the appraiser.

Location Of The Property: 1600 St. Michaels Drive, Santa Fe, NM 87505 –
The subject property is located on south side of St. Michaels Drive and on the north side of Siringo Road, having access from these streets. The subject is on the west side of Llano Street, on the east side of Camino Carlos Ray and on the southeast side of Cerrillos Road but does not have access from these streets. The subject is located on the former campus of the private Santa Fe University of Art and Design and surrounded by public property including elementary, mid-school and high schools and City and State public buildings within Santa Fe, NM.

Location Map

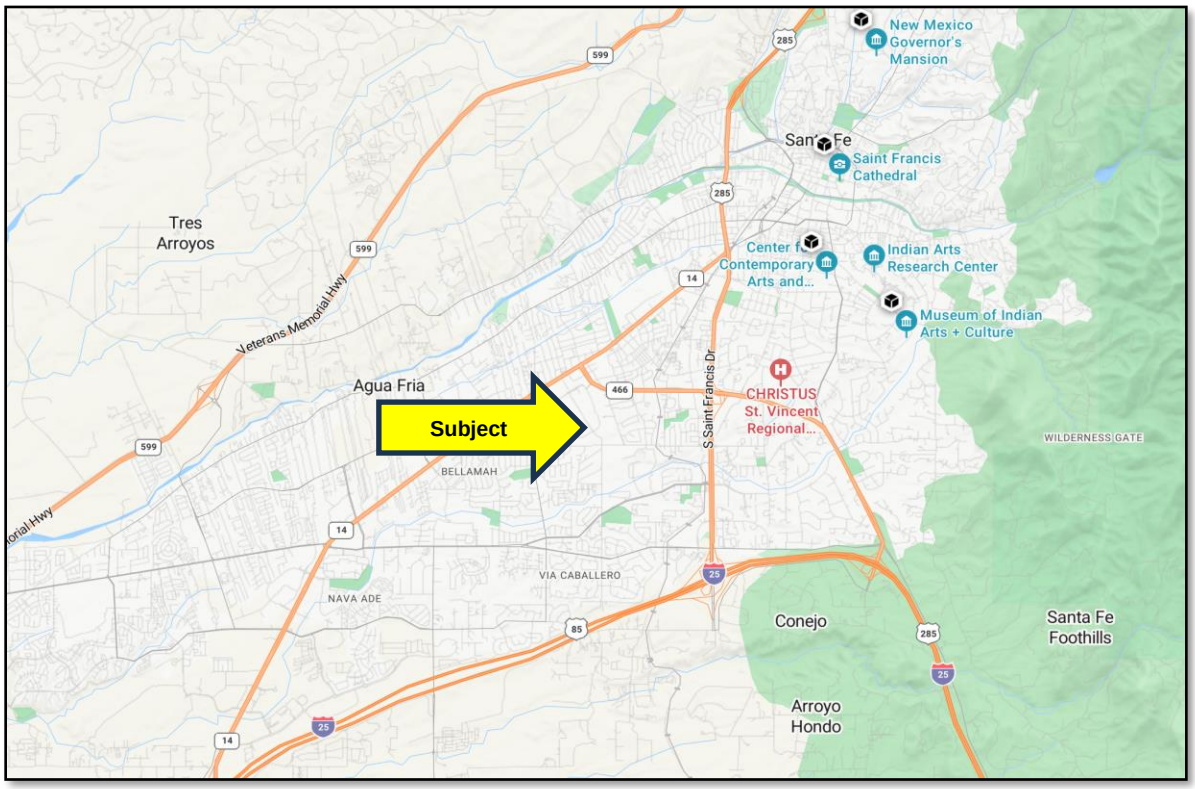

Type and Definition of Value: The purpose of the appraisal is to provide the appraiser's best estimate of the market value of the subject property as of the effective date. The market value definition is defined by FIRREA:

Market Value Definition
The most probable price which a property should bring in a competitive and open market under conditions requisite to a fair sale, the buyer and seller each acting prudently and knowledgeably, and assuming the price is not affected by undue stimulus. Implicit in this definition are the consummation of a sale as of a specified date and the passing of title from seller to buyer under conditions whereby:
1. Buyer and seller are typically motivated; 2. Both parties are well informed or well advised, and each acting in what they consider their own best interests; 3. A reasonable time is allowed for exposure in the open market; 4. Payment is made in terms of cash in U.S. dollars or in terms of financial arrangements comparable thereto; and 5. The price represents the normal consideration for the property sold unaffected by special or creative financing or sales concessions granted by anyone associated with the sale.[1]

Intended Use of the Appraisal: The intended use of the appraisal is to assist the client with asset valuation for negotiation of potential lease/sale.

Intended User of the Report: The report is intended for use by the client, City of Santa Fe, Office of Economic Development. Any other party who chooses to rely on this report is advised the appraiser is not obligated to any party other than the original intended user, nor does reliance on the report by a party other than the original intended user result in such party becoming an intended user of the report.

Interest Valued: The subject is comprised of commercial – mixed use of offices, film studios, and a former gymnasium/fitness center that are available to be leased. Over the past several years the leases have short terms because the owner is attempting to sell the property subject to a development plan. As such, this appraisal will produce a final value, subject to fee simple ownership.

Definition: Fee Simple Interest
Absolute ownership unencumbered by any other interest or estate, subject only to the limitations imposed by the governmental powers of taxation, eminent domain, police power, and escheat.[2]

Effective Date of Value: The effective date of the fee simple market value of the subject property 'as is' is November 15, 2023, which is the date the property was inspected.

[1] Department of Treasury, 12 CFR 34

[2] The Appraisal Institute, The Dictionary of real Estate Appraisal, 7th ed., (Chicago: Appraisal Institute, 2022), p. 73

Date of the Report: March 4, 2024

Legal Description: A survey on the subject has not been completed. The subject is a portion of the former College of Santa Fe, Located within Section 34, T17N, R9E within the City and County of Santa Fe, New Mexico

Property Taxes: The subject property is owned by the City of Santa Fe and is not subject to property taxation. If the property is conveyed to private ownership, it will be subject to property taxes.

Scope Of The Appraisal: This appraisal was prepared in accordance with the *Uniform Standards of Professional Appraisal Practice 2024* and instructions accompanying the definition of market value promulgated by the FDIC. The written reporting format for this assignment is defined by U.S.P.A.P. as an appraisal report. Preparation of the appraisal involved the following:

Subject Property	
Midtown Studios (Pere) located at 1600 St. Michaels Drive	
The subject property is comprised of several structures over 12+ acres of land.	
Scope of Work	
1. Inspected the site and the improvements	
2. Gathered and confirmed information on comparable improved commercial sales, rents, operating expenses and capitalization rates. Additionally, collected comparable estimates for demolition. ***Note: Sales were viewed by the appraisers in this firm and confirmed with a party knowledgeable regarding the transactions.***	
○ Valuation – based on the highest and best use. Confirmed and analyzed the data and applied the following approaches: ○ Sales Comparison Approach (buildings and excess land) ○ Income Approach: Direct Capitalization • Cost Approach: <u>not</u> developed due to age of improvements/speculative depreciation ○ Reconciled these approaches to a final estimate of market value	
Extraordinary Assumptions and Hypothetical Conditions	
Extraordinary assumptions	Yes - used in this report
Hypothetical conditions	Not used in this report

Definition: Extraordinary Assumption
An assignment-specific assumption, as of the effective date regarding uncertain information used in an analysis which, if found to be false, could alter the appraiser's opinions or conclusions. Comment: Uncertain information might include physical, legal, or economic characteristics of the subject property, or conditions external to the property, such as market conditions or trends, or about the integrity of data used in an analysis. (USPAP, 2020-2023 ed.)[3]

Currently, the City of Santa Fe GIS Zoning Map shows that the subject is zoned as an R-5 Residential Zone. However, there are at least two City of Sante Fe Resolutions (No. 2018-54 and 2022-12), in which direct the City Zoning to rezoned the subject to a C-2 General Commercial District.

Extraordinary Assumption
The property is subject to at least two City of Santa Fe Resolutions (No. 2018-54 and 2022-12), which result in the proposed, and now assumed, rezoning from a R-5 Residential Zone to a C-2 General Commercial District. If this assumption should prove to be inaccurate, the subject's value could be impacted.

The subject has had two Phase 1 Environmental Site Assessment Reports, where several Recognized Environmental Conditions were concluded and then addressed by a Phase 2 Environmental Site Assessment Report. The results of those Phase 2 procedures were negative of any environmental impact.

Extraordinary Assumption
The property has had two Phase 1 and one Phase 2 Environmental Site Assessment Reports completed and it is assumed any and all environmental concerns were addressed. If this assumption should prove to be inaccurate, the subject's value could be impacted.

Currently, there is no known survey of the subject property. As such, the appraiser has used lot coverage ratios to calculate the excess land amount.

Extraordinary Assumption
The subject has excess land. No survey or engineering report has been provided to the appraiser to calculate the excess land. The appraiser has utilized lot coverage ratios in order to produce an amount of excess land. If this assumption should prove to be inaccurate, the subject's value could be impacted.

[3] Ibid., p. 68

No items of personal property are included in this appraisal. Aside from a casual inspection of the property, the appraisal included no assessment of potential environmental hazards.

The appraisal is prepared based on this assumption.

To the Best of my Knowledge, this Report Complies with:
• The Office of the Comptroller of the Currency Regulation 12 CFR Part 34 minimum standards. • The Appraisal Guidelines of Richard Brown • The New Mexico Real Estate Appraiser Laws • Uniform Standards of Professional Appraisal Practice of the Appraisal Foundation 2020-2023 • Code of Professional Ethics and Standards of Professional Practice of the Appraisal Institute

The final determination as to the level and degree of compliance of this report with regard to the foregoing policies and guidelines is the responsibility of any person relying on this report. The appraisal is performed according to Title XI of the Federal Financial Institution Reform Recovery and Enforcement Act (FIRREA). The appraisal is also subject to the appraiser's Certification and Statement of Assumptions and Limiting Conditions which accompany this report.

Marketing Time and Exposure Time:

The marketing/exposure time discussion follows.

Marketing Time Definition
An opinion of the amount of time to sell a property interest at the concluded market value or at a benchmark price during the period immediately after the effective date of an appraisal. Marketing time differs from exposure time, which precedes the effective date of an appraisal. (Advisory Opinion 7 and Advisory Opinion 35 of the Appraisal Standards Board of The Appraisal Foundation address the determination of reasonable exposure and marketing time.)[4]
Exposure Time Definition
1. The time a property remains on the market. 2. An opinion, based on supporting market data, of the length of time that the property interest being appraised would have been offered on the market prior to the hypothetical consummation of a sale at market value on the effective date of the appraisal. (USPAP, 2020-2023 ed.)[5]

In a stable market the marketing time and the exposure time should be the same. The Santa Fe market had been in a state of varying levels of decline for several years after the recession, with some of the market exhibiting tepid performance and some of the market exhibiting significant shifts. Those shifts could cause a difference in the marketing time and exposure time. However, based on economic data over the past few years, the market appears to have stabilized with less evidence of shifts in the market that could cause a difference in the marketing or exposure time. Therefore, they have been assumed to be the same in this analysis.

Marketing time will be affected by the supply and demand factors within the marketplace. Typically, support for a marketing time is sought from the known marketing time of similar properties.

Subject Property: 1600 St. Michaels Drive
The subject property is comprised of commercial – mixed use of offices, film studios, and a former gymnasium/fitness center.

[4] Ibid., p. 116
[5] Ibid., p. 68

Due to the limited number of sales of this property type, the search was extended to all commercial sales in Santa Fe. The MLS commercial improved sales in Santa Fe since 2016 and the current MLS listings are detailed in the following table.

COMMERCIAL SALES/LISTING TABLE

Sales							
		Median			**Average**		
Year	**Sales**	**SP**	**DOM**	**SP/LP**	**SP**	**DOM**	**SP/LP**
2023: (thru 11/23/23)	29	$825,000	345	95%	$842,552	123	94%
2022	49	$907,000	90	93%	$1,355,150	241	95%
2021	51	$603,000	110	97%	$892,640	158	95%
2020	40	$460,000	91	95%	$825,531	194	93%
2019	40	$461,750	131	96%	$876,824	189	89%
2018	34	$510,000	107	91%	$829,485	185	90%
2017	39	$468,592	327	94%	$688,567	350	86%
2016	38	$570,000	237	99%	$787,965	311	88%
Listings							
	Listings	**Median**			**Average**		
Year		**LP**	**DOM**	**SP/LP**	**LP**	**DOM**	**SP/LP**
Active	50*	$955,000	1138	n/a	$1,577,874	227	n/a
*Pending:6 current listings							
Source: Santa Fe Area Multiple Listing Service							

The data shows absorption of commercial real estate has been relatively stable from 2016 through 2020 with an increase in 2021 and 2022. There is a 12.2 months' supply based on the 2022 sales and current listings. The median and average market exposure among the sales in the last five years ranged from three to eight months.

Conclusion: Due to the subject's location in the fast-growing southwest sector of the city, the subject property is marketable; however, there are several structures and a larger than normal amount of land. If the subject property was actively marketed at or near the appraised value, the marketing time/exposure time is estimated to be three months to two years.

Marketing & Exposure Times	
1600 St. Michaels Drive	Estimated to be three months to two years if actively marketed at or near the current market value. The most likely buyer is a national investor.

DESCRIPTION OF REAL ESTATE APPRAISED
Location Description – City

Santa Fe is a small city located in the Sangre de Cristo Mountains of northern New Mexico. It is the oldest state capital in the U.S., having been established in 1610, and it is known for its historic, cultural and artistic heritage. In general, the population continues to increase. Below is data from the last three census from the U.S. Census Bureau:

Population Growth: City and County of Santa Fe

Area	2000	2010	Change/ Census Year	2020	Change/ Census Year
City of Santa Fe	62,203	67,947	9.23%	87,505*	28.78%*
Santa Fe County	129,292	144,170	11.5%	154,823	7.39%
*Includes city's annexation of 13,000+ residents effective January 1, 2014					

Economic indicators such as gross receipts tax, lodger's tax, and real estate sales all grew into the mid-2000's. Gross receipts posted their first decline in fiscal year 2008/2009, with onset of the recession, but they have increased each year since 2010/2011, and in fiscal year 2017/2018 they topped the pre-recession high of 2007/2008. Gross receipts for the fiscal year of 2019 increased approximately 15% from 2018 and decreased approximately 8.1% in 2020 from 2019. For the fiscal year of 2021, gross receipts increased 12.2% from 2020 and in fiscal year 2022, gross receipts decreased 21.4% from 2021. The lodger's tax for the city's hotel/motel rooms has followed the same general pattern; it was up 11% for the 2016/2017 fiscal year compared to the prior fiscal year. It increased 15.2% in 2018 and 14.0% in 2019 and then decreased 68.9% in 2020. In fiscal year 2021, lodger's tax increased 163.9% from 2020. Occupancy increased 2.2% in 2018, compared to 2017 and it decreased slightly by .6% in 2019 from 2018. The occupancy rate decreased from 69.9% in 2019 to 35.9% in 2020 and then increased to 58.8% in 2021 and to 66.8% in 2022. The average daily rate decreased from $146.87 in 2019 to $111.66 in 2020 and then increased to $169.79 in 2021 and to $198.72 in 2022. The decreases in 2020 are likely the result of the Covid-19 health crisis.

The Santa Fe economy is based primarily on tourism and government employment. While neither government nor tourism produces high incomes, the

government sector had been fairly stable until 2020 due to the Covid-19 health crisis. With the tourism declines experienced during the 2008 recession, Santa Fe remained one of the premier tourist destinations in the country according to national surveys. In 2022, the annual average employment for state government within the public sector was up 500 jobs or 0.9% and federal government employment was unchanged from the previous year's employment level. Employment in local government was up 2,800 jobs or 2.9% for 2022 (annual average).

Since 1850, the population in Santa Fe County has continued to increase. The median household income was $64,423 in 2021, higher than the median of $54,020 for New Mexico. With a median home price in 2021 of $315,100, the cost of a home is higher than the median for the state of $184,800. Slightly over 12% of the population lives below the poverty line, compared to 18.4% overall in New Mexico (2021 figures most recent available). The annual unemployment rates not seasonally adjusted for Santa Fe County and New Mexico since 2013 are listed in the following table.

UNEMPLOYMENT RATE TABLE

Area	Annual Unemployment Rate (Not Seasonally Adjusted)									
	2022	2021	2020	2019	2018	2017	2016	2015	2014	2013
New Mexico	4.0%	6.8%	8.4%	5.0%	4.9%	6.1%	6.7%	6.6%	6.6%	6.9%
Santa Fe County	3.6%	6.2%	8.3%	4.2%	4.1%	5.0%	5.3%	5.4%	5.4%	5.6%

Source: New Mexico Workforce Connection

The unadjusted unemployment rate for the City/County of Santa Fe was 3.4% for September 2023 (the latest data available), which is down 0.6% from the previous month, August 2023, and 0.5% lower than the previous year, September 2022. The city/county rate is lower than the state average of 3.5% and lower than the national average of 3.6% for September 2023. The rates for the city/county, state and national average all decreased slightly from August 2023.

Residential real estate sales volume (single family, condo, duplex, townhouse, x-plex) in the Santa Fe area (MLS Areas 001, 002, 003, 003N, 003S, 004N, 004S, 013) topped out in 2005, and the number of sales in 2018 was the highest since 2006, having increased each year since 2009 until 2014 and fluctuated thereafter; 2018 sales volume increased approximately 8.8% from 2017. The 2019 sales volume declined 3.4% from 2018, the 2020 sales volume declined 1.7% from 2019, the 2021 sales volume increased 15.4% from 2020 and the 2022 sales volume declined 51% from 2021.

Median sale price peaked in 2007 and for 2019 it was the same as the top of the market. It increased 1.7% for 2019, 15% for 2020, 9.3% for 2021 and 14.94% for 2022. Both median and average residential sale prices have remained relatively stable from 2011 through 2015 and subsequently increased each year. The median and average sale prices from 2016 through 2022 are shown in the following table.

Median and Average Residential Sales Prices

Year	2022	2021	2020	2019	2018	2017	2016
Median Sale Price	$500,000	$435,000	$398,000	$345,900	$340,000	$300,000	$290,000
Average Sale Price	$688,637	$608,316	$533,850	$472,703	$456,428	$418,063	$393,008
Note: MLS Areas 001, 002, 003, 003N, 003S, 004N, 004S & 013; Single Family, Condo, Duplex, Townhouse & X-plex							

The total number of building permits in Santa Fe for single unit homes and multi-unit homes are shown in the following chart.

Building Permits for Single Unit/Multi-Unit Privately Owned Housing Units

Year	Single Unit Homes	Multi-Unit Homes	Total
2019	344	245	589
2020	279	298	577
2021	228	612	840
2022*	178	300	478
*Preliminary			
Source: US Census Bureau			

The most current data available for commercial building permits is 2015. In 2015 there was 192,000 square feet of new commercial development (the ten-year annual average is approximately 100,000 square feet), compared to the prior two years new construction of 141,000 square feet (2014) and 144,000 square feet (2013).

Conclusion: The economic outlook for Santa Fe and the surrounding metro area is moderate as of the effective appraisal date. Commercial properties are oversupplied, while there is an undersupply among residential properties. Most of the residential markets are appreciating. Absorption of commercial real estate has been relatively stable from 2015 through 2020, then increased in 2021 and decreased slightly in 2022. All the data indicates a generally level economy in the area, and there is no reason to believe the foreseeable future will change greatly.

Location Description – Neighborhood

Subject Neighborhood
The subject's immediate neighborhood may be described as the commercial corridor extending along St. Michaels Drive from its intersection with Cerrillos Road to the St. Francis Drive overpass.

The subject is located within the Midtown development near the physical center of Santa Fe, southwest of St. Michaels Drive in a secondary location surrounded by property owned by the City of Santa Fe, the State of New Mexico and private ownership on the south and on the west side by Santa Fe Public Schools. The Midtown Campus is currently undergoing planning for redevelopment. The subject lies within the transition from the commercial/institutional use along St. Michael's Drive to the Bellamah tract home neighborhood south of Siringo Road.. St. Michaels Drive is a primary commercial arterial within southern Santa Fe, connecting the eastern portion of the city and western portion of the city. The area along St. Michaels Drive in the subject's neighborhood consists primarily of commercial development and institutional development backed by mixed commercial/industrial and residential to the south. The commercial retail development is primarily concentrated on St. Francis Drive and Cerrillos Road.

Immediately surrounding the subject, the land use is almost entirely institutional, including the former Santa Fe University of Art and Design, a public library and middle school farther to the southeast, three New Mexico state office/warehouse facilities to the southwest and an elementary school to the southwest and a park farther to the west/southwest. The largest public high school also lies directly southeast of the subject, at the southeast corner of Siringo Road and Yucca Street. Retail uses along St. Michael's Drive include several small to large sized strip retail centers, car dealerships, banks, restaurants, various local retail businesses and offices. The St. Michael's commercial corridor has been targeted by the City for redevelopment with higher density commercial and possibly multi-family development through planning and zoning.

Conclusion: The defined neighborhood encompasses an active retail commercial area in Santa Fe. This is a very viable area economically, and the outlook for the future is good.

Legal Use of the Property

Although the subject property has operated as an educational and film production property, it has been zoned R-5 Residential. More recently, through a City of Santa Fe Resolution 2018-54 and 2022-12, the property is in the formal process of being rezoned to C-2, which will be the base zoning considered in this report. In addition to this base zoning the subject is located within the Midtown Local Innovation Corridor (Midtown LINC) Overlay District and the Opportunity Zone: Census Tract 11:03 Midtown Campus Area. Each of these distinct regulations are exhibited below and in the following pages.

Subject Zoning	
C-2 (General Commercial District)	
Purpose: General Commercial Districts	
The C-2 General Commercial District includes areas along *streets* carrying large volumes of traffic where commercial uses are appropriate. Regulations are designed to guide future additions or changes so as to discourage extension of existing and formation of future strip *commercial development* , to preserve the carrying capacity of the *streets* and to provide for *off-street parking* and loading.	
Source: Santa Fe Land Development Code (14-4.3 Definitions)	
Zoning Detail: C-2 (General Commercial District) (Note 1)	
Minimum District and Lot Size	None; open space requirements see Section 14-7.5(D)(8)(c)
Maximum Height of Structures	45 feet
Minimum Setback Requirements (See Note 1 below for additional setback regulations)	Front: 15 feet Side: 0 feet Rear: 10 feet (See Note 2 for setback abutting residential district)
Maximum Lot Coverage (%) See Note 8 for non-residential open space requirements	60%
Notes [From Section 14-7.3-1] 1. Additional regulations, see also: Section 14-5 Overlay Districts and official zoning map. Provisions of overlay districts, including historic, escarpment or neighborhood districts may override standards in this table; Section 14-8.4(J)(3), fifteen-foot buffer required nonresidential uses adjacent to residential uses; Section 14-8.4(I)(2)(d), five-foot planting strip where parking lot abuts street required yard; Section 14-8.2(D)(4)(e)(i), setback from shoulder of arroyo, stream of watercourse; and Section 14-7.1(D), required yards. 2. Additional regulations: Rear yard ten feet, except on the rear of a lot abutting a residential district, in which case there shall be a required rear yard of not less than twenty-five feet or twenty percent of the depth of the lot, whichever is the least. See also Section 14-8.4(J)(3) Landscape Buffer for Nonresidential Uses, fifteen-foot buffer required for nonresidential uses adjacent to residential uses. 8. See Section 14-7.5(D) for amount of open space required for non-residential uses. From Section 14-7.5(D)(8)(c) (8) Open Space Requirements (c) C-2 District - *Open space* is required for each ground-floor *dwelling unit* at a minimum of two hundred fifty (250) square feet. *Dwelling units* located above the ground floor are not required to provide *open space* .	
Source: Santa Fe Land Development Code (14-7.3 Definitions)	

Extraordinary Assumption
The property is subject to two City of Santa Fe Resolutions (2018-54 and 2022-12), which resulted in the proposed, and now assumed, rezoning to C-2 General Commercial District. If this assumption should prove to be inaccurate, the subject's value and/or marketability could be impacted.

Midtown Local Innovation Corridor (Midtown LINC) Overlay District

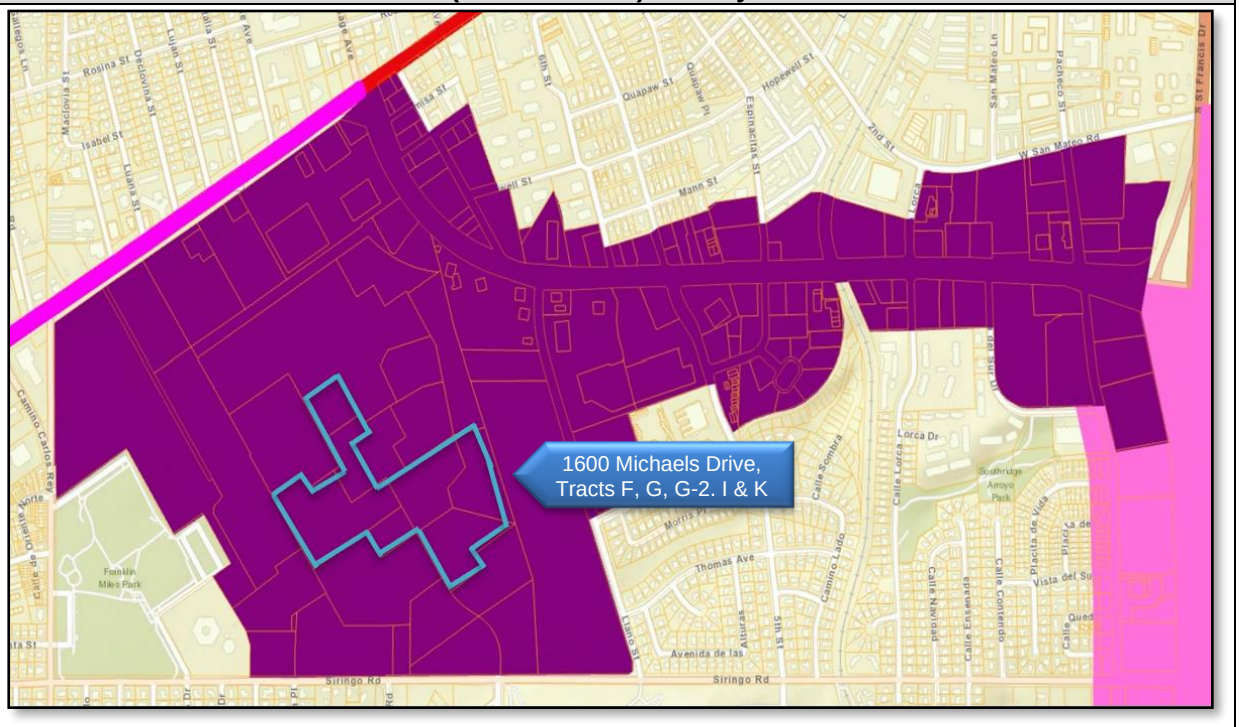

Purpose: Midtown Local Innovation Corridor (Midtown LINC) Overlay District

The purpose and intent of the Midtown Local Innovation Corridor (LINC) Overlay District is to:

(a) Strengthen and animate the built environment and the business and population links within the demographic and geographic center of the city between the existing employment centers of the Santa Fe University of Art and Design and surrounding uses to the west and the Christus St. Vincent Regional Medical Center and related medical uses to the east;

(b) Incentivize multi-family residential development, complementary non-residential uses, and an enlivened, street-oriented pedestrian environment by freeing development capacity of existing under-developed land and buildings for these targeted uses, while allowing existing uses to continue as redevelopment occurs;

(c) Allow for innovative development and redevelopment of the district while providing buffering between the district and existing residential development outside of the district by the application of amended land development regulations and fees and by establishing conditions precedent for future infrastructure enhancements and the application of other redevelopment and financing tools;

(d) Promote a more healthy, safe, and enjoyable environment within the city's midtown area through the enhancement of pedestrian and bicycle accessibility and safety, landscaping and other street-related amenities and the eventual reduction of traffic speeds and provision of on-street parking, bicycle lanes, and improved crosswalks; and

(e) Provide flexibility in sign design and location so as to maintain effective communication, business identification and wayfinding for existing buildings whose visibility may be reduced by new development.

Source: City of Santa Fe Ordinance No. 2019-19

The LINC establishes standards for “qualifying projects” that meet the City’s objectives for redevelopment of the corridor. The LINC allows for a greatly expanded range of uses and qualifying projects are subject to relaxed standards for setbacks, height restrictions, landscaping and parking standards and also qualify for certain fee

waivers and/or reductions (construction permit fees, impact fees, water UECs, etc.). Importantly, qualifying projects of a certain size can be approved through administrative review, rather than going through a more traditional review and hearing at the Planning Commission.

Opportunity Zone: Census Tract 11:03 Midtown Campus Area

Additional: Opportunity Zone-Census Tract 11.03: Midtown Campus Area
Federal Opportunity Zones (QOZ's) are a new community development program established by Congress in the Tax Cuts and Jobs Act of 2017 to encourage long-term investments in low-income urban and rural communities nationwide. The QOZ program provides a tax incentive for investors to re-invest their unrealized capital gains into Opportunity Funds (QOF's) that are dedicated to investing into QOZ's designated by the chief executives of every U.S. state and territory.
Governor Martinez approved the subject census tract for designation to the US Treasury. Finally, designation approval was received by U.S. Treasury in June 2018.

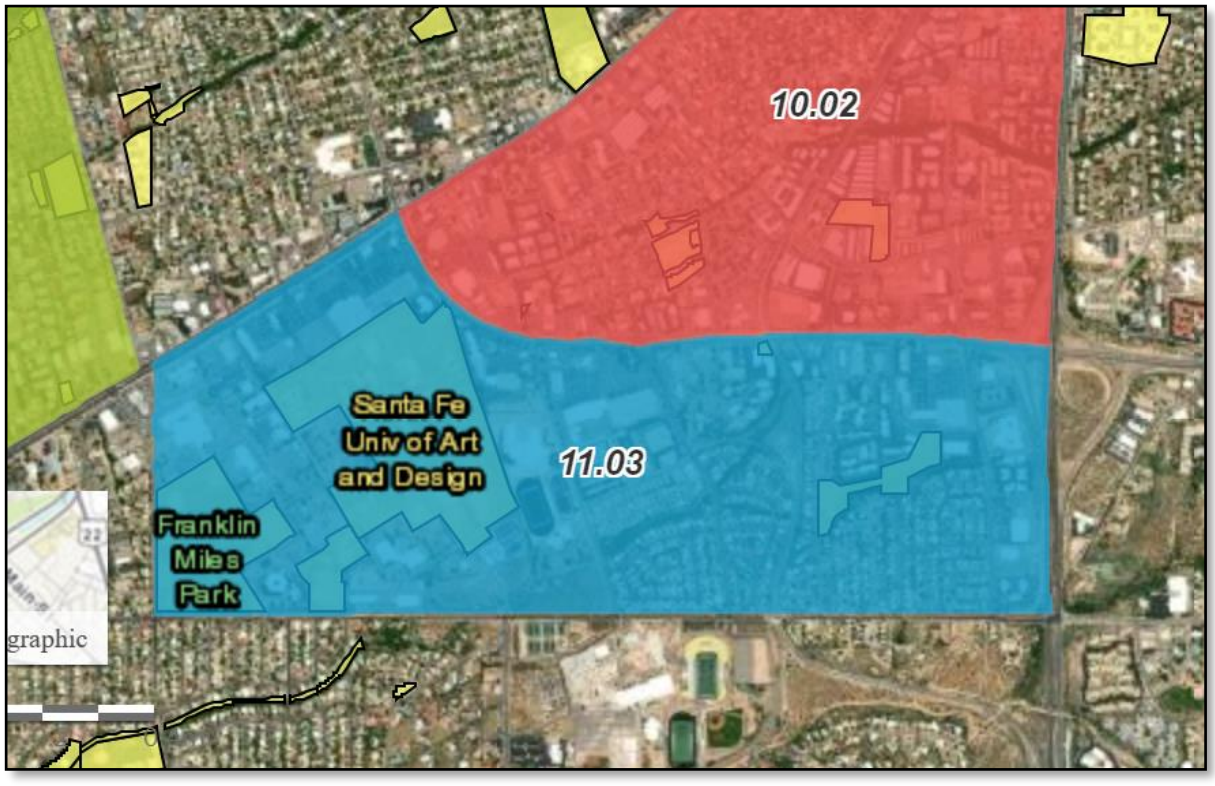

Source: *https://www.santafenm.gov/opportunity_zones_in_santa_fe*

Resolution No. 2022-12

This Resolution was passed February 23, 2022 and set in-motion the steps the City of Santa Fe would take towards the reuse and redevelopment of the former College of Santa Fe, which is now referred to as the "Midtown Property". This resolution was the direct ascendant of Resolution No. 2018-54, which established to City's public policy

goals for the City owned property. As No. 2022-12 pertains to the subject property, the following actions were stated:

- Rezone the entire campus to C-2 commercial.
- Issue an RFP for the redevelopment, expansion, and operation of the Garson Studios for the purpose of creating a full-service studio for film or multimedia.

Midtown Proposed Master Plan

The City of Santa Fe's proposed Midtown Master Plan (the Midtown Land Development Plan), dated November 21, 2022, provided new development standards for the subject property in Chapter 5. The development standards are comprised of sub-zone (controls use) and façade (controls building masing and design) standards. The sub-zones support the objectives of the Census Tract 11:03 Midtown Campus Area Opportunity Zone and Midtown LINC Overlay District, as well as Resolution No. 2022-12, which rezones the subject to a C-2 General Commercial District to allow for commercial, retail and residential uses. The subject is covered within two sub-zones, namely the mixed-use film (for film production activities focused in the Garson Studios) and mixed-used office (for service commercial uses between film production and residential uses). These two sub-zones require that the subject's use will be for film and media purposes.

See the Development Standards Regulating Plan below for an illustration of the subject's film and office mixed-use sub-zones designations.

Midtown Proposed Master Plan

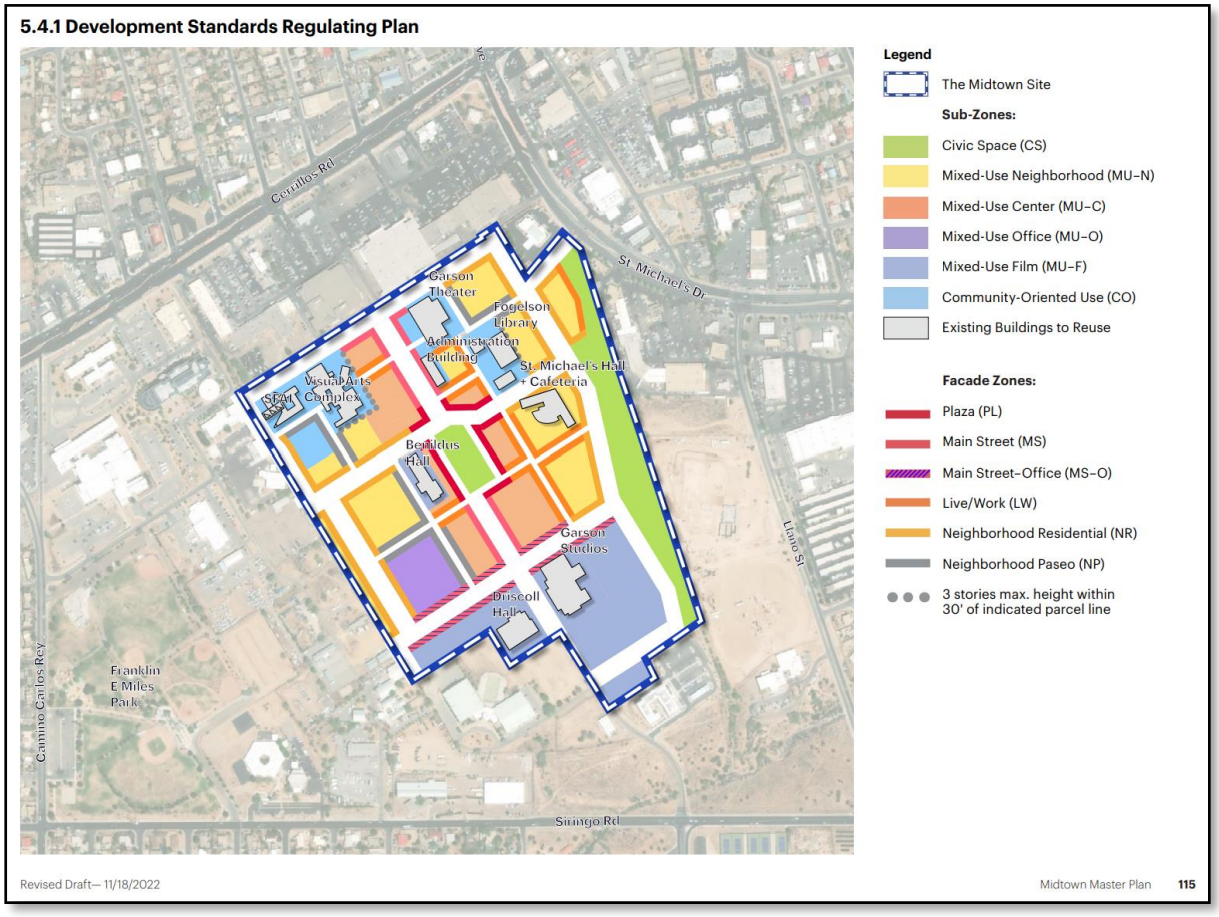

Source: City of Santa Fe Midtown Proposed Master Plan (11/21/2023)

Property Description
Site

Site: 1600 St. Michaels Drive
The subject site consists of 12.24 acres ±.

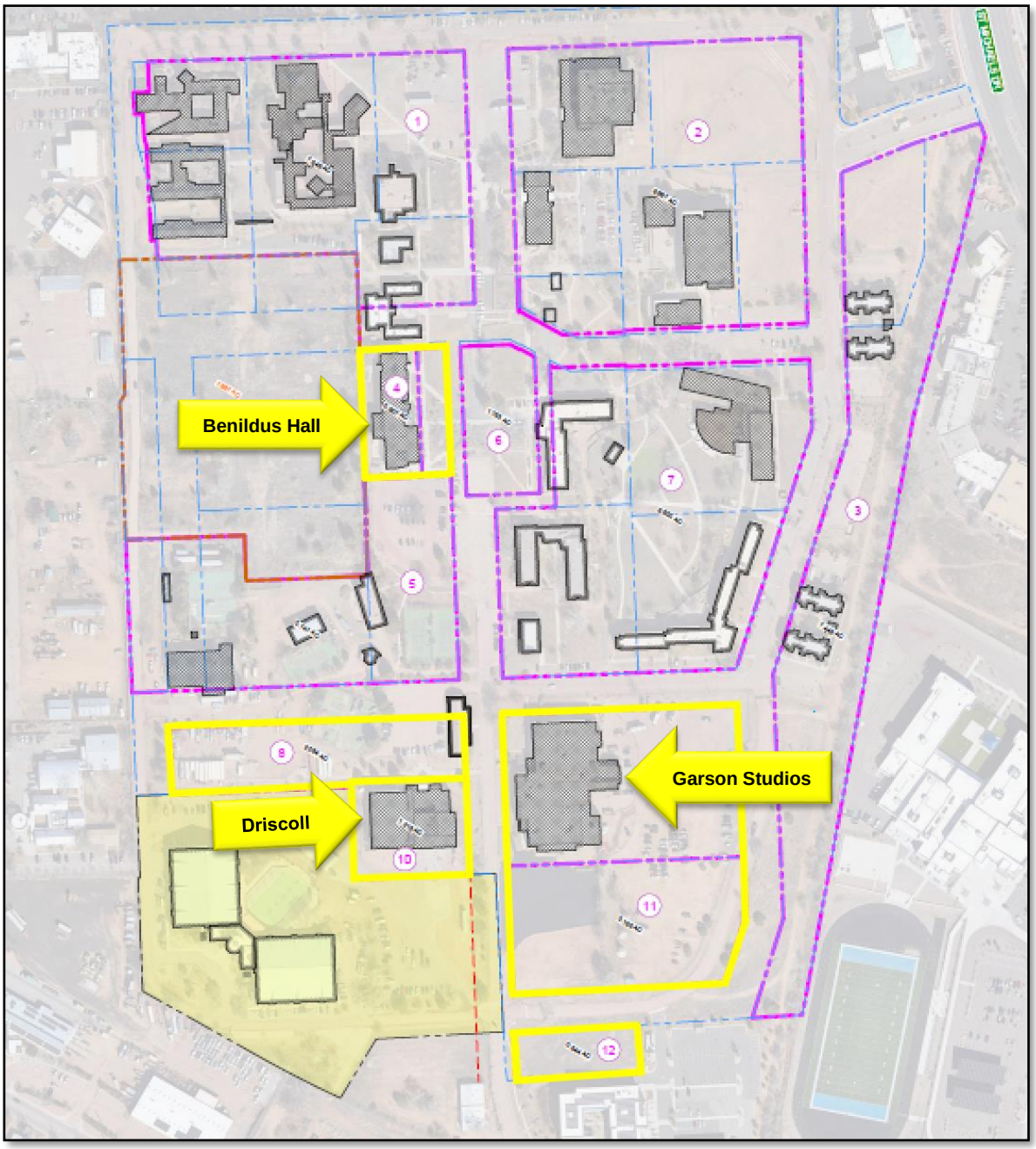

The subject is approximated on the aerial photograph by representatives from the City of Santa Fe

Site Details: Midtown Studios Pere	
Size	Total Site Size: 533,153 square feet or 12.24 acres ± Source: Client
Shape/Topography	Irregular/At street grade
Frontage	Alumni Drive on the east, south and west site boundaries
Access	Alumni Drive, a paved 2-lane street which lacks curbs, gutters, or sidewalks

Easements/ Encroachments	Plat or title work not provided
Legal Use	Zoning: C-2 (General Commercial District) & Midtown Local Innovation Corridor (Midtown LINC) Overlay District
Flood	Flood Zone X: Site is located in an area of minimal flood hazard. Flood Insurance Rate Maps 35049C0411E dated 12/4/2012 and 35049C0413E dated 12/4/2012.
Utilities	All/public (water, sewer, electricity, natural gas, telephone, internet)
Soil	A soil survey was not provided, and it is not known if one has been prepared. Construction on neighboring properties and on the subject appears to be stable. For the appraisal, it is assumed that soils are adequate to support construction. However, no warranties are made or implied by the appraiser.
Comments	No external obsolescence was noted

Environmental Site Assessment

The subject property has had two Phase 1 Environmental Site Assessment (ESA) Reports completed in the last several years. In April of 2021 the City of Santa Fe completed the first Phase I report. This report, done by Souder, Miller & Associates, covered the entire 64.22 acres campus property. The second Phase I report was done by Western Technologies in September of 2023. This report covered the 12.24 acres ± that is the subject of this report.

Central to both reports was the Recognized Environmental Conditions (REC) exhibited within the findings. These REC included:

- Adjacent property chlorinated solvent groundwater contamination.
- Vehicle maintenance stains visible, requiring Phase 2 soil samplings.
- Existing Aboveground Storage Tanks (AST) in use with no apparent spills/stains.
- Former Underground Storage Tanks (UST) removed with no apparent spills/stains.
- Backfill with demolition debris, requiring a Phase 2 ESA, which identified Asbestos-Containing Materials (ACM)

According to Tim Farrell, a Property Development Manager for the City of Santa Fe, these RECs were addressed by Western Technologies who completed a Phase 2 ESA Report where soil samples (borings) and analysis were conducted. The results of those procedures were negative of any environmental impact.

Extraordinary Assumption
The property has had two Phase 1 and one Phase 2 Environmental Site Assessment Reports completed and it is assumed any and all environmental concerns were addressed. If this assumption should prove to be inaccurate, the subject's value could be impacted.

Excess Land Calculation

Excess Land – Definition
Land that is not needed to serve or support the existing use. The highest and best use of the excess land may or may not be the same as the highest and best use of the improved parcel. Excess land has the potential to be sold separately and is valued separately.[6]

No planning or engineering has been provided to produce an exact amount of excess land on the subject. The subject site has a number of existing structures that have immediate use/utility, as well as a number of buildings that should be razed and removed. All commercial structures have requirements/needs for parking, landscaping/open space and emergency needs. Based on the nature of the filming industry a larger than normal amount of ancillary lands are needed; however, the subject's cumulative land size allows for parking "spill-over" situations.

Benildus Hall (former education use – currently rented as professional office) is a structure that is are common in Santa Fe and there is considerable data to produce an estimate for needed ancillary lands. Because of the project design, Benildus does not have adequate parking. In order to provide the needed parking, the owner and the prospective buyer have agreed to a proposed land lease in the area immediately south of the structure. As such, the land calculated for Benildus Hall is comprised of a small lot under the structure and a small lot immediate to the east of the structure, which total 53,078 square feet.

The lot coverage ratios for the Garson Studios and Driscoll buildings are uncommon because they have soundstages, which require parking for large trucks and temporary trailers, as well as professional office space. Excess parking for the Garson Studios is evident due to the additional parking lease, even though the amount of parking area is not specified in the lease. Based on interviews with subject representatives and tenants, the lot ratio at Garson Studios appears to be 25%. Because the Driscoll Building is considered a "smaller" version of Garson Studios, the same lot coverage is applied.

[6] Appraisal Institute, The Dictionary of Real Estate Appraisal, 7th ed., (Chicago: Appraisal Institute, 2022), p. 66

The calculation for the lands needed for each of the useable structures on the subject is exhibited below with the final estimate of the subject's excess land. It is noted that the amount of land connected to Benildus (53,078 sf) is subtracted from the total site size.

Component	Bldg. size	Land Size needed	480,075 sf Site
Garcon Studios	49,200 sf	196,800 sf	(196,800)
Driscoll	22,200	88,800 sf	(88,800)
		Excess Land Total	**195,275 square feet**

The subject's excess land is estimated to be 195,275 square feet in size.

Extraordinary Assumption
The subject has excess land. No survey or engineering report has been provided to the appraiser to calculate the excess land. The appraiser has utilized lot coverage ratios in order to produce an amount of excess land. If this assumption should prove to be inaccurate, the subject's value could be impacted.

Improvements

Subject: Midtown Studios Pere

The subject improvements are comprised of three buildings.

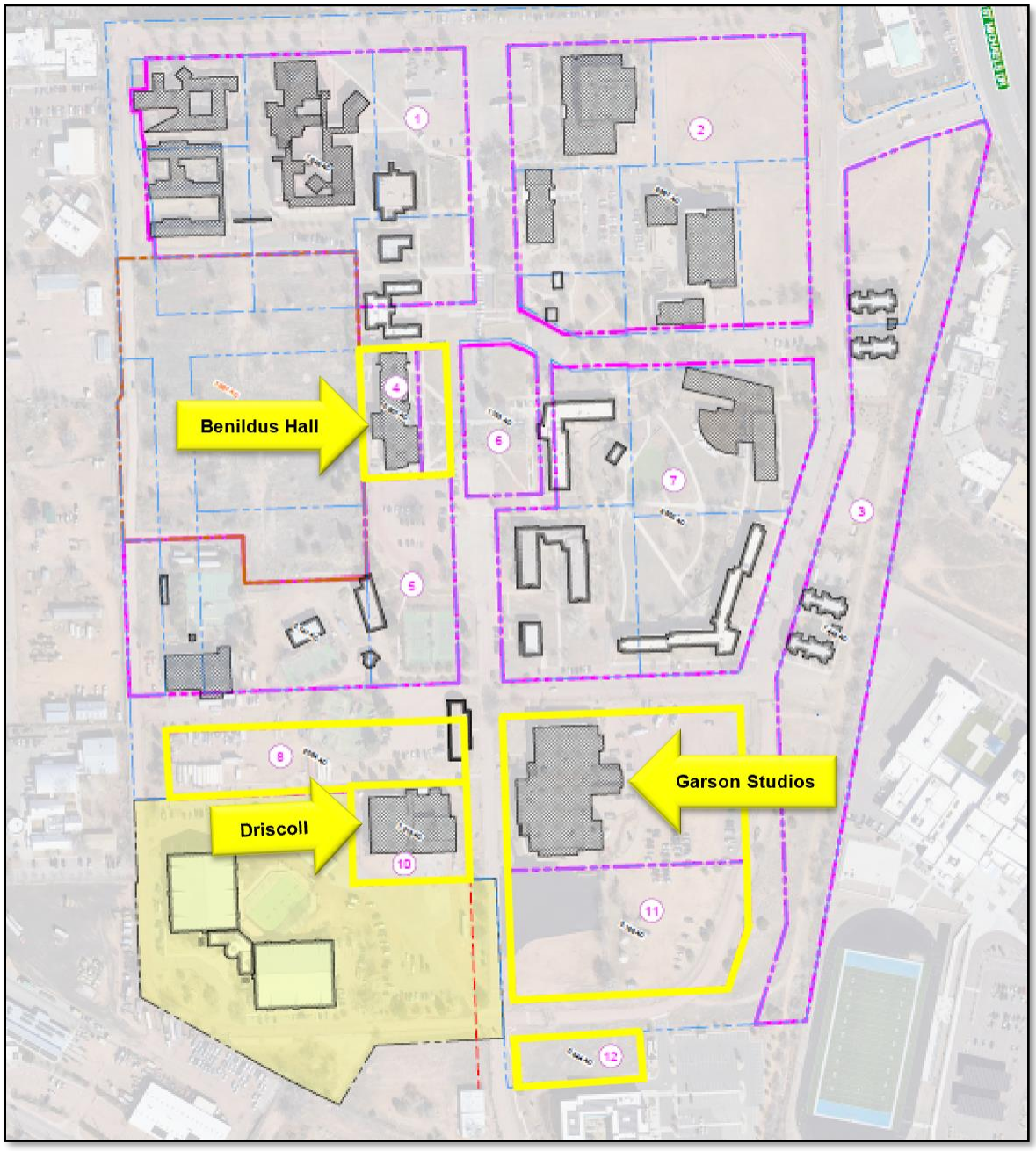

Garson Studios: Building Details	
Current Use	Three sound stages/professional offices/theater
Building Type	Steel constructed with wood framing
Building Areas	Gross: 49,200 square feet Three sound stages (A: 14,000 sf; B: 7,500 sf; and C: 2,100 sf) The Screen Theater: 2,000 sf Professional offices: 23,600 sf
Number of Stories	Two
Basic Structure	Steel/concrete/wood-framed building on a slab
Foundation	Masonry
Exterior Wall Cover	Stucco
Roof	Built-up composition
Interior Wall Cover	Drywall and acoustical panels with sound proofing in the sound stages
Flooring	Carpet and wood over concrete slab
Ceiling	Suspended acoustical tile and exposed
HVAC	Roof mounted HVAC system
Restrooms/Plumbing	Multiple with male and female locker rooms
Lighting	Fluorescent and recessed
Utilities	Full/public (water, sewer, electricity, natural gas, telephone)
Age	Constructed in 1991 *Estimated effective age: 22 years (based on observation/level of maintenance)* *Remaining economic life: 28 years*
Quality/Condition	Average *Property has been maintained on a regular basis since its construction*
Parking	Adequate for current use
Comments	Property was constructed for film production. Sound stages have upgraded electric and structural reinforcement from ceilings. Ready to rent
Deferred Maintenance	A Facility Assessment Report was completed by Wilson Company on January 4, 2023, to ascertain the cost to address the building's deferred maintenance. According to the report the cost is $2,696,459.

Garson Studios: Photos













Garson Studios: Floor Plan, 1st Floor

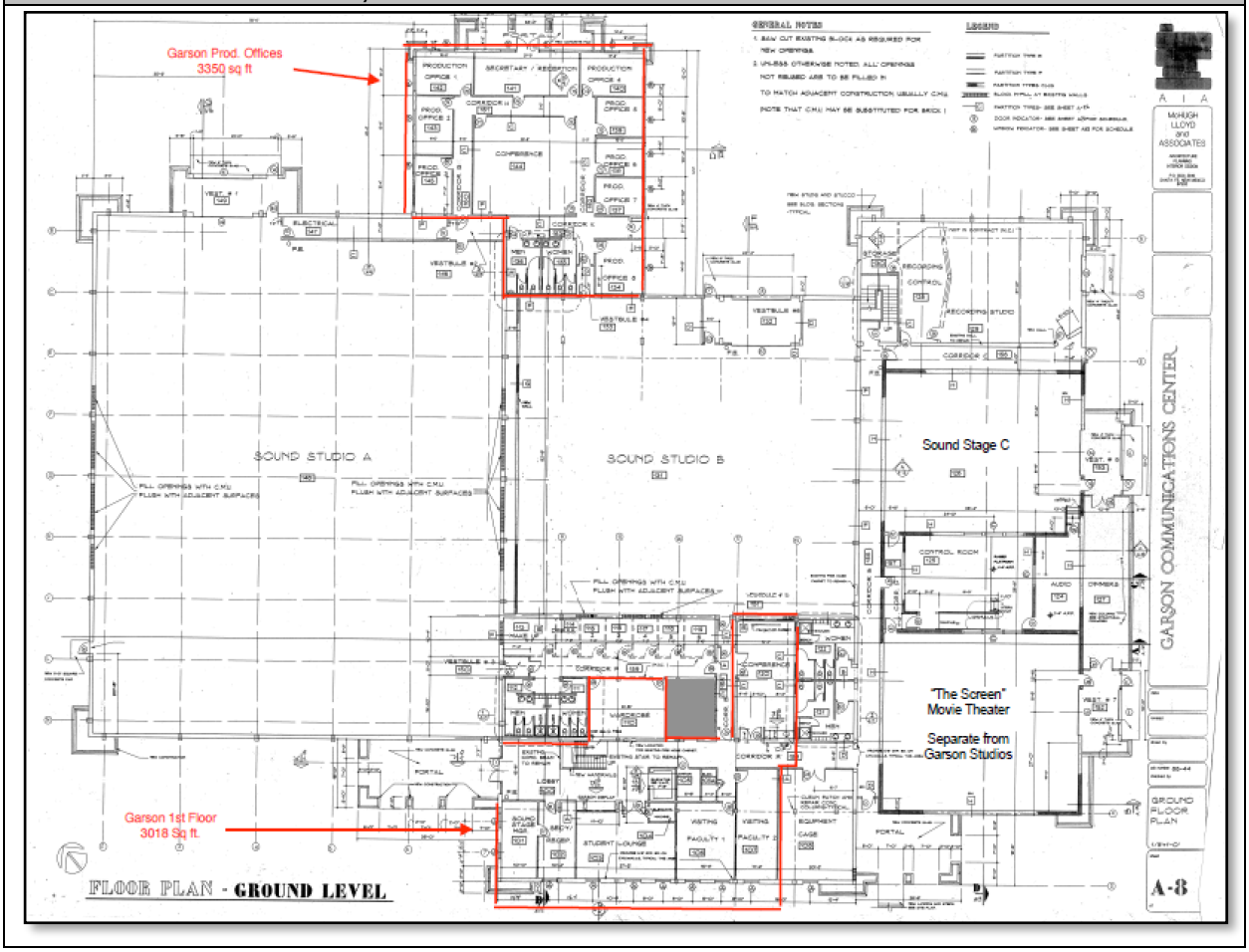

Garson Studios: Floor Plan, 2nd Floor

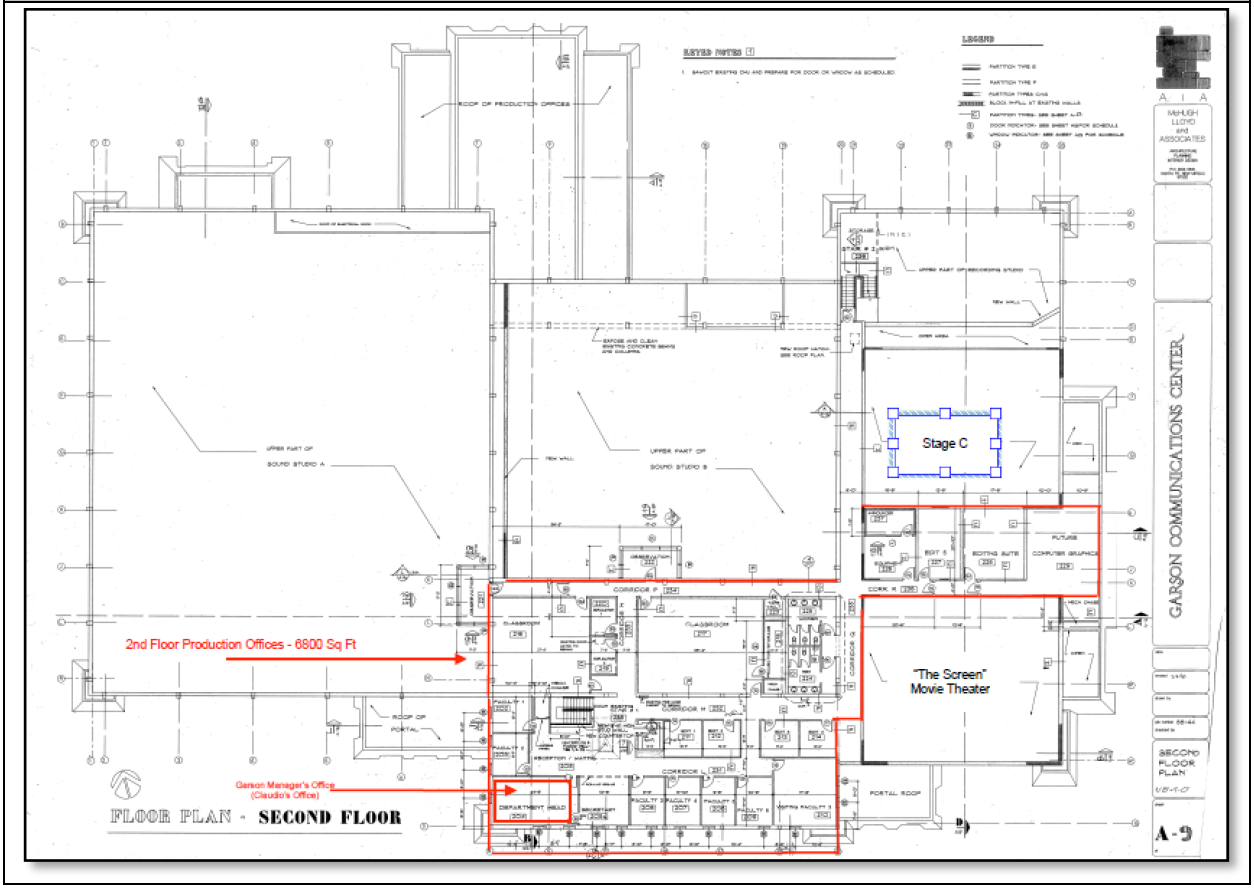

Driscoll: Building Details	
Historic/Current Use	Former athletic complex with large gymnasium/vacant
Building Type	Steel
Building Areas	Gross: 22,200 square feet
Number of Stories	One
Basic Structure	Steel and wood-framed building on a slab
Foundation	Masonry
Exterior Wall Cover	Stucco
Roof	Built-up composition
Interior Wall Cover	Drywall and wood panels
Flooring	Carpet and wood over concrete slab
Ceiling	Suspended acoustical tile and exposed
HVAC	Roof mounted HVAC system
Restrooms/Plumbing	Multiple with male and female locker rooms
Lighting	Fluorescent and recessed
Utilities	Full/public (water, sewer, electricity, natural gas, telephone)
Age	Constructed in 1993 *Estimated effective age: 22 years (based on observation/level of maintenance)* *Remaining economic life: 28 years*
Quality/Condition	Average *Property has been maintained on a regular basis since its construction*
Parking	Adequate for current use
Comments	Large gymnasium that has the beginning of a renovation to become a sound stage. Large (exercise rooms) located on the eastern portion of the building can be converted into offices.
Deferred maintenance	A Facility Assessment Report was completed by Wilson Company on January 11, 2023, to ascertain the cost to address the building's deferred maintenance. According to the report the cost is $1,284,847.

A draft report completed by Robert Wichmann (High Desert Structural Engineering, LLC. phone - 505-473-7373) was completed for the prospective buyer of the subject. According to this draft report, the roof over the gymnasium portion of this structure "does not appear to meet design criteria". Upon interviewing Mr. Wichmann, the appraiser learned that he had not had an opportunity to inspect the building plans (not provided) and as such, did not sign or stamp his report. **Without further (engineering) study,** this structure is inappropriate for sound stage development because of the need for suspended apparatus found in soundstages.

Extraordinary Assumption
According to the appraiser the Driscoll structure should be converted into a soundstage with the remaining space used as supportive office. There have been some structural issues identified that could make the conversion of the building inappropriate. If the structure is found to be structurally adequate or financially feasible to be renovated to be adequate, the results of this appraisal are subject to change.

Driscoll: Photos








Driscoll: Floor Plan

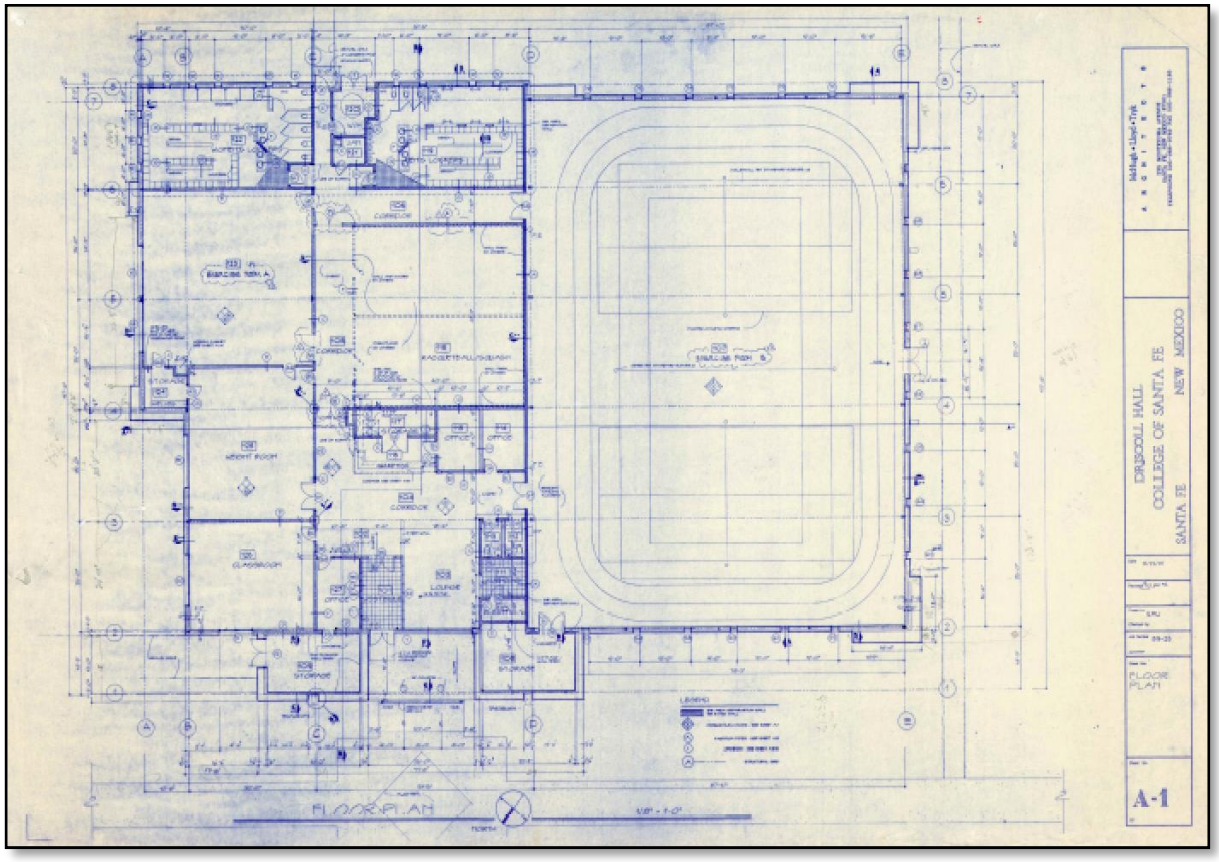

Benildus Hall: Building Details	
Current Use	Professional offices related to film production – formerly used as academic/classroom facility
Building Type	Steel with Masonry
Building Areas	Gross: 27,757 square feet
Number of Stories	Two
Basic Structure	Reinforced concrete perimeter/column pad footing
Foundation	Masonry
Exterior Wall Cover	Stucco, stone and brick
Roof	Built-up composition
Interior Wall Cover	Drywall and suspended
Flooring	Carpet and terrazzo
Ceiling	Suspended acoustical tile and suspended
HVAC	Roof mounted HVAC system
Restrooms/Plumbing	Multiple with male and female locker rooms
Lighting	Fluorescent and recessed
Utilities	Full/public (water, sewer, electricity, natural gas, telephone)
Age	Constructed in 1963 and addition constructed in 2005 *Estimated effective age: 18 years (based on observation/level of maintenance)* *Remaining economic life: 32 years*
Quality/Condition	Average plus *Property has been maintained on a regular basis since its construction*
Parking	Not adequate for current use
Deferred maintenance	A Facility Assessment Report was completed by Wilson Company on January 11, 2023, to ascertain the cost to address the building's deferred maintenance. According to the report the cost is $1,759,269.

For purposes of project design, this property does not have enough adequate property for parking. As such, the Property owner has entered into a "proposed" lease agreement for parking (+/- 60 spaces) located to the immediate south of the building.

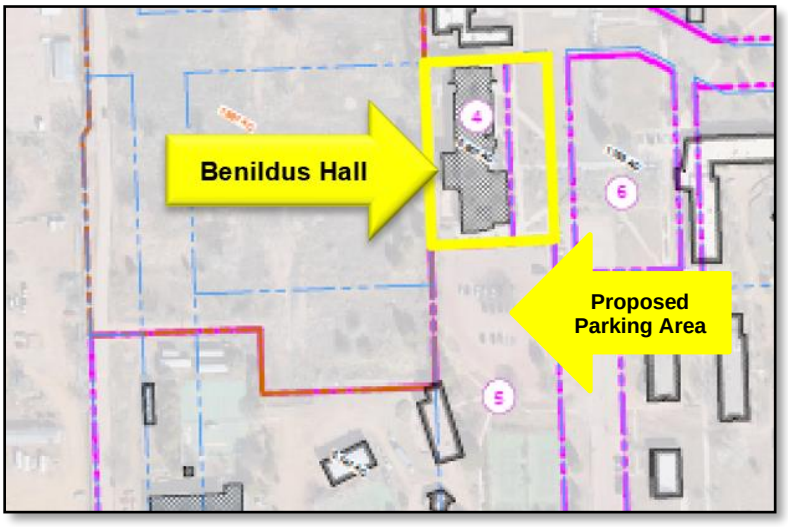

Benildus Hall: Photos







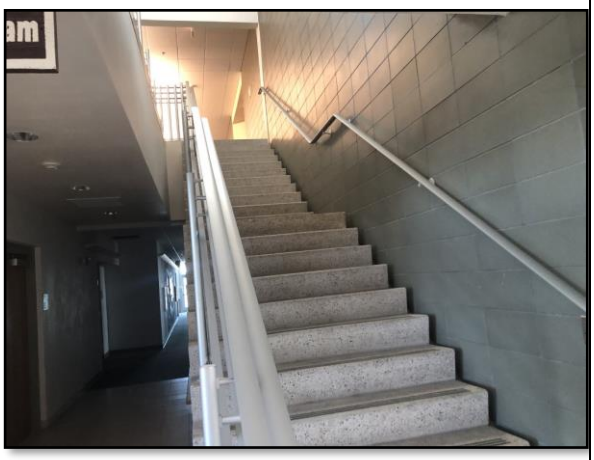





Benildus: Floor Plan, 1st Floor

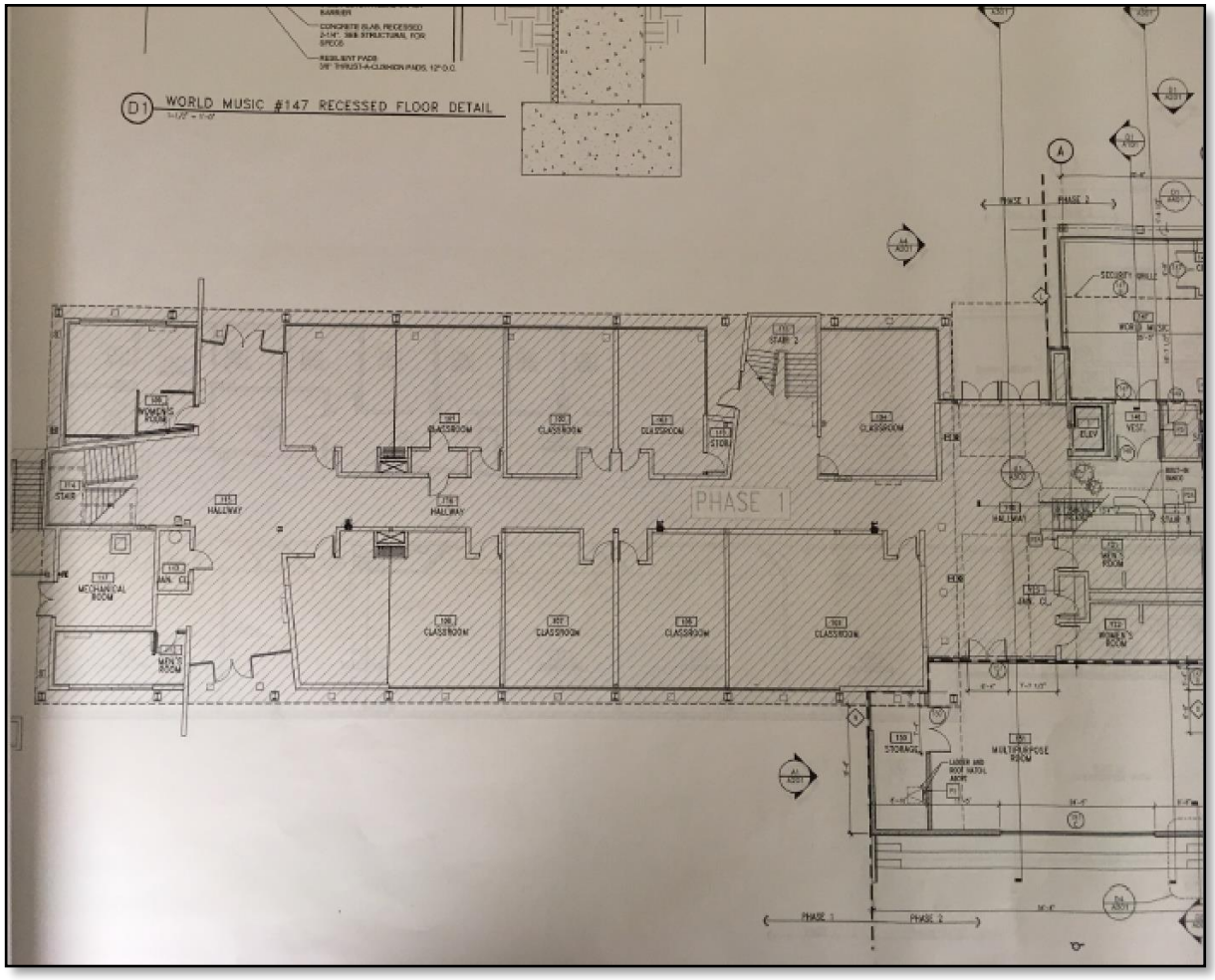

Benildus: Floor Plan, 2nd Floor

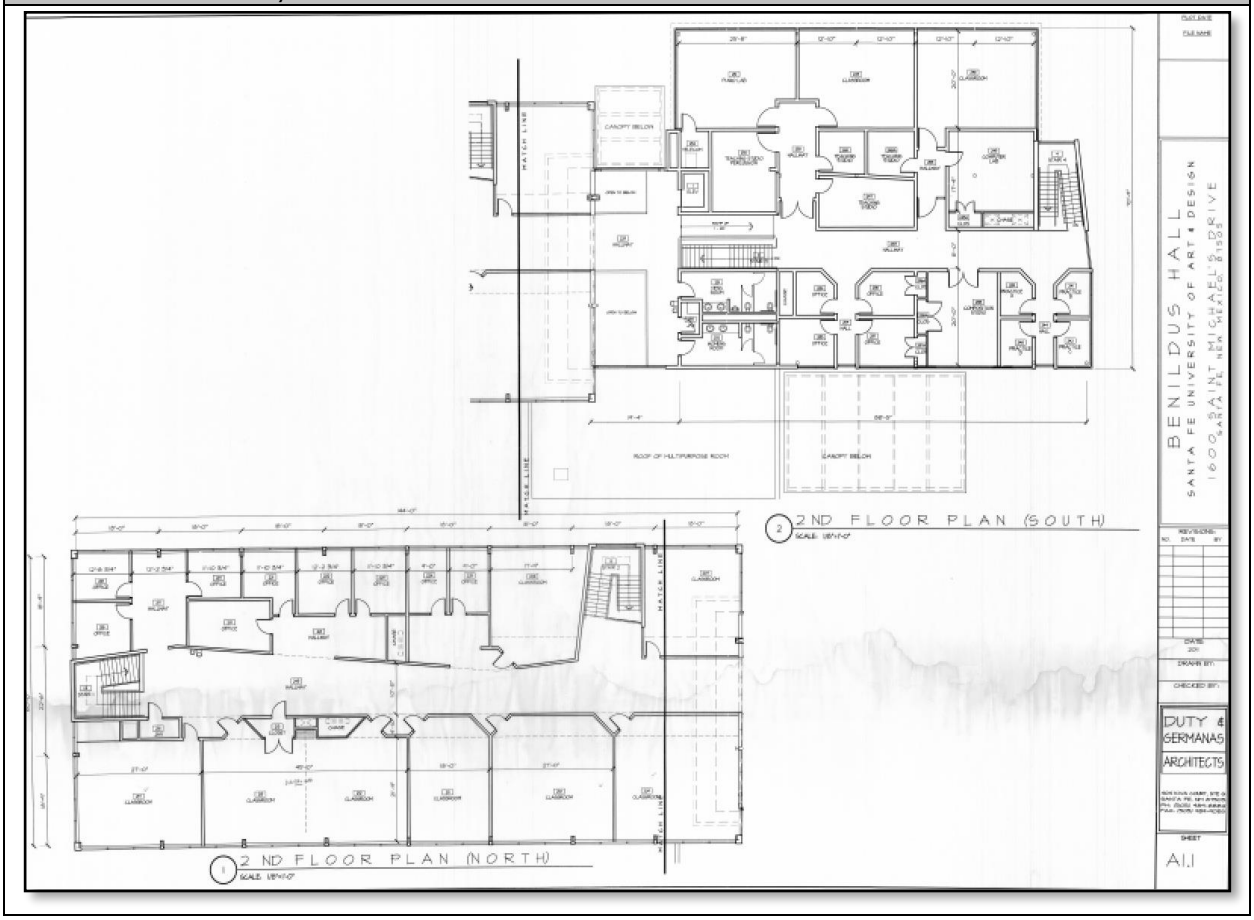

HIGHEST AND BEST USE

Highest and Best Use is Defined as:
1. The reasonably probable use of the property that results in the highest value. The four criteria that the highest and best use must meet are legal permissibility, physical possibility, financial feasibility, and maximum productivity. 2. The use of an asset that maximizes its potential and that is possible, legally permissible, and financially feasible. The highest and best use may be for continuation of an asset's existing use or for some alternative use. This is determined by the use that a market participant would have in mind for the asset when formulating the price that it would be willing to bid. (IVS). 3. [The] highest and most profitable use for which the property is adaptable and needed or likely to be needed in the reasonably near future. (Uniform Appraisal Standards for Federal Land Acquisitions) 4. [For Fair value determination] The use of a nonfinancial asset by market participants that would maximize the value of the asset or the group of assets and liabilities (for example, a business) within which the asset would be used. (FASB Glossary) The highest and best use of nonfinancial asset takes into account the use that is physically possible, legally permissible, and financially feasible. (FASB 820-10-35-10B). The highest and best use of a nonfinancial asset establishes the valuation premise used to measure the fair value of the asset, as follows: (a) The highest and best use of a nonfinancial asset might provide maximum value to market participants through its use in combination with other assets as a group (as installed or otherwise configured for use) or in combination with other assets and liabilities (for example, a business). (b) The highest and best use of the asset might provide maximum value to market participants on a standalone basis. (FASB 820-10-35-10E)[7]
Highest and Best Use Criteria
A) Is the use physically possible? B) Is the use legally permissible? C) Is the use financially feasible? D) Is the use maximally productive?

In addition to the four tests, appropriate use is included. It is not a specific test for highest and best use, but a test that is a function of the four tests. The highest and best use of a property is typically determined both as if vacant and as improved.

Highest and Best Use As Vacant

Highest and Best Use of Land as Though Vacant is:
Highest and best use of land as though vacant is based on the assumption the parcel of land is vacant or can be made vacant by demolishing any improvements.

[7] Ibid., p. 88

Legally Permissible: As shown in the "legal Use" section of this report, a C-2 (General Commercial District) is assumed as the subject's base zoning. This zoning allows various commercial uses - retail, service, institutional, office, hotel/motel, restaurant, and some limited light industrial uses. Residential use is primarily only allowed as an ancillary use for the owner/occupant of the commercial use. The current uses on the subject are considered legal.

In addition to the base zoning, the subject has two overlay districts. The first overlay district is the Midtown Local Innovation Corridor (LINC). The LINC establishes standards for "qualifying projects" that meet the City's objectives for redevelopment of the corridor. The LINC allows for a greatly expanded range of uses and qualifying projects are subject to relaxed standards for setbacks, height restrictions, landscaping and parking standards and also qualify for certain fee waivers and/or reductions (construction permit fees, impact fees, water UECs, etc.). Importantly, qualifying projects of a certain size can be approved through administrative review, rather than going through a more traditional review and hearing at the Planning Commission. Overall, this will make any expansions within the subject property larger, easier to be approved and cheaper to develop.

The second overlay is the Opportunity Zone, Midtown Campus Area. This Federal Opportunity Zones (QOZ's) are a new community development program established by (US) Congress in the Tax Cuts and Jobs Act of 2017 to encourage long-term investments in low-income urban and rural communities nationwide. The QOZ program provides a tax incentive for investors to re-invest their unrealized capital gains into Opportunity Funds (QOF's) that are dedicated to investing into QOZ's designated by the chief executives of every U.S. state and territory. Governor Martinez approved the subject census tract for designation to the US Treasury. Finally, designation approval was received by U.S. Treasury in June 2018. Ultimately, this will allow for future owners of the property to receive tax incentives to upgrade existing structures.

Lastly, The City of Santa Fe's proposed Midtown Master Plan (the Midtown Land Development Plan), dated November 21, 2022, provided new development standards for the subject property in Chapter 5. The development standards are comprised of sub-zone (controls use) and façade (controls building masing and design) standards. The

sub-zones support the objectives of the aforementioned Census Tract 11:03 Midtown Campus Area Opportunity Zone and Midtown LINC Overlay District, as well as Resolution No. 2022-12, which rezones the subject to a C-2 General Commercial District to allow for commercial, retail and residential uses. The subject is contained within two sub-zones, namely the mixed-use film (for film production activities focused in the Garson Studios) and mixed-used office (for service commercial uses between film production and residential uses). These two sub-zones require that the subject's use will be for film and media purposes.

Based on the legal restraints (zoning plus overlays), the subject's land use will be commercial as it accompanies film and media production. As such, this is the only land use option considered.

Highest and Best Use of Land as Though Vacant is:
Commercial – with all structures related to film and media production.

Highest and Best Use as Improved

Definition: Highest and Best Use of Property As Improved
The use that should be made of a property as it exists

This analysis considers the property with its existing structures. The property has an old history and many of the structures are beyond their economic life. Because we know the land use will be film production, one must consider whether the existing building has any current/future use as it relates to film production. Further, there are times when existing building can be renovated to create better utility. The following building are considered useable and income producing:

- Bendilus
- Garson Studios
- Driscoll

Except for the Benildus Hall, all of these structures have land for parking, landscaping and emergency needs. The buyer and sellers of the project have entered into a land lease agreement to account for parking at Benildus Hall. As such, the needed lands take up much of the subject's land; however, there is excess land. This is where the landowner can construct new buildings where there are existing/future utility needs, for example, housing, additional soundstages, or storage buildings (as they relate to film

production).

Highest and Best Use of Land as Improved is:
Commercial – with all structures related to film and media production. Benildus, Garson Studios, and Driscoll with excess land.

VALUATION

The valuation process is the procedure by which an estimate of value is determined for the subject. The property is appraised as its highest and best use: commercial film production property with (future) income producing residential. Because this property is unique to Santa Fe, sales of similar properties are not present. To produce a value for the subject, the (contributory) components of the subject property are valued separately and combined to produce a final value.

In general, the structures will be analyzed for needed lands for each structure and parking. Ideally, each of the structures will have a sales comparison and income approach performed and reconciled to produce a contributory value for each of the four structures. A sales comparison approach for the Garson Studios or Driscoll building is not performed. Per the discussion in the Site Description section of this report (page 27), the subject has excess land. The excess land portion of the subject will be valued "as if vacant" by using a sales comparison approach.

Each of the structures on the subject was constructed years ago and as such, reports have been produced that address the deferred maintenance of the buildings. Except for newly built or fully renovated buildings – all commercial properties have deferred maintenance. There are three methods appraisers can use to account for deferred maintenance. The first, and most ideal method, is to commission a single company (like the company commissioned to perform the deferred maintenance analysis on the subject's structures) to perform deferred maintenance analysis on the subject and all the comparables used. This provides an equal and most consistent analysis; however, this is not cost effective or appropriate when comparables are not in proximity or will not provide access for an inspection.

A second method of incorporating deferred maintenance reports into an appraisal is to understand that deferred maintenance is "baked-in" to all the comparable data. As a building ages, its parts get older and maintenance expenses increase until renovation occurs. Renovations will "reset' the effective age of a building. This is why appraisers will give a 100-year-old structure an effective age of 20 years. It's likely this same building has been renovated several times over its 100-year life. In this method the

appraiser seeks to find comparable buildings (in both the sales comparison and income approaches) that have similar effective ages as the subject. Adjustments are made within the separate valuations (sales and income) to accommodate for differences between the effective ages – this is the primary accounting for deferred maintenance (often characterized as a condition adjustment). It is inappropriate to incorporate a deferred maintenance amount (for example as provided by Wilson Company) using this method. By doing this the appraiser is accounting for the subject's deferred maintenance twice in the same analysis.

The third method of incorporating deferred maintenance reports into an appraisal is to initially value the subject "as if" the property is totally renovated and secondly, apply the deferred maintenance amount (supplied by a profession company – in this case, the Wilson Company) to the produce the "as is" value.

In the case of this appraisal, the third method was employed for the valuation of Benildus and Garson Studios. Both the client and the proposed buyer made this appraiser aware of the deferred maintenance reports completed on the subject properties and asked to have the deferred maintenance estimates incorporated into the report. Issues (building structure) have arisen that are in potential conflict with this appraiser's original understanding of the Driscoll structure (discussed on page 33). As such, the appraiser has decided to use this the second method described above until the structure can be properly studied and assessed by a certified engineer.

Building	Methodology	Page
Benildus	Sales Comparison Approach	46
	Income Approach	59
	"as if" Reconciliation	74
Garson Studios	Study - Sales Comparison	80
	Income Approach	81
	"as if" Reconciliation	88
Driscoll	Income Approach	91
Excess Land		95
	Final Value Conclusion	107

Benildus - Sales Comparison Approach

Definition: Sales Comparison Approach
The process of deriving a value indication for the subject property by comparing sales of similar properties to the property being appraised, identifying appropriate units of comparison, and making adjustments to the sale prices (or unit prices, as appropriate) of the comparable properties based on relevant, market-derived elements of comparison. The sales comparison approach may be used to value improved properties, vacant land, or land being considered as though vacant when an adequate supply of comparable sales is available.[8]

The sales comparison approach is based on the premise that a well-informed buyer would pay no more for an existing property than it would cost to buy a similar substitute property. While there are seldom exact duplicate properties available to a buyer, the prices paid for similar properties are indicative of value. In this approach to value, a common denominator is used in comparing sales to the subject. In this case, the price per square foot of the improvements is used. This figure was found by dividing the sale price by the size of the improvements. The subject is appraised to its highest and best use: commercial professional office tenancy as it relates to the film production industry.

It should be noted that this analysis is performed "as if" all the deferred maintenance on the subject is repaired – the subject is completely renovated.

The sales comparables are summarized in the following chart and described individually on the pages following the chart.

COMMERCIAL SALES CHART

No.	Location	Date of Sale	Sales Price	SF	$/SF
1	1474 Rodeo Road	11/2018	$13,025,000	79,679	$163.47
2	1 Plaza La Prensa	11/2018	$5,775,000	52,253	$110.52
3	2945 Rodeo Park Drive East	12/2018	$2,100,000	23,285	$90.19
4	2044 & 2048 Galisteo	03/2019	$1,952,000	18,444	$105.83
5	2056 Galisteo	08/2019	$2,550,000	14,500	$175.86
6	525 Camino de Los Marquez	07/2021	$7,915,000	38,259	$206.88
7	2504 Camino Entrada	12/2021	$3,786,720	30,922	$122.46

Additional Sales

In addition to the comparables, two large office buildings (single tenant) sold recently.

- 2009 S. Pacheco: 39,110 square feet
- 2025 S. Pacheco: 38,976 square feet

These buildings were most recently occupied by governmental entities. However, they are located in the Midtown Linc overlay and Opportunity Zone (Census tract 11.03: Midtown Campus Area) and were purchased for redevelopment (likely apartments/residential). They are older and are considered in fair to average condition.

[8] Appraisal Institute, The Dictionary of Real Estate Appraisal, 7th ed., (Chicago: Appraisal Institute, 2022), p. 170

Due to the purchase for redevelopment to another use, age/condition and location in the Midtown Linc overlay, they are not included in this analysis.
Note: based on changes in the market, these properties were maintained as office buildings and not subsequently redeveloped.

Sales Comparables Map

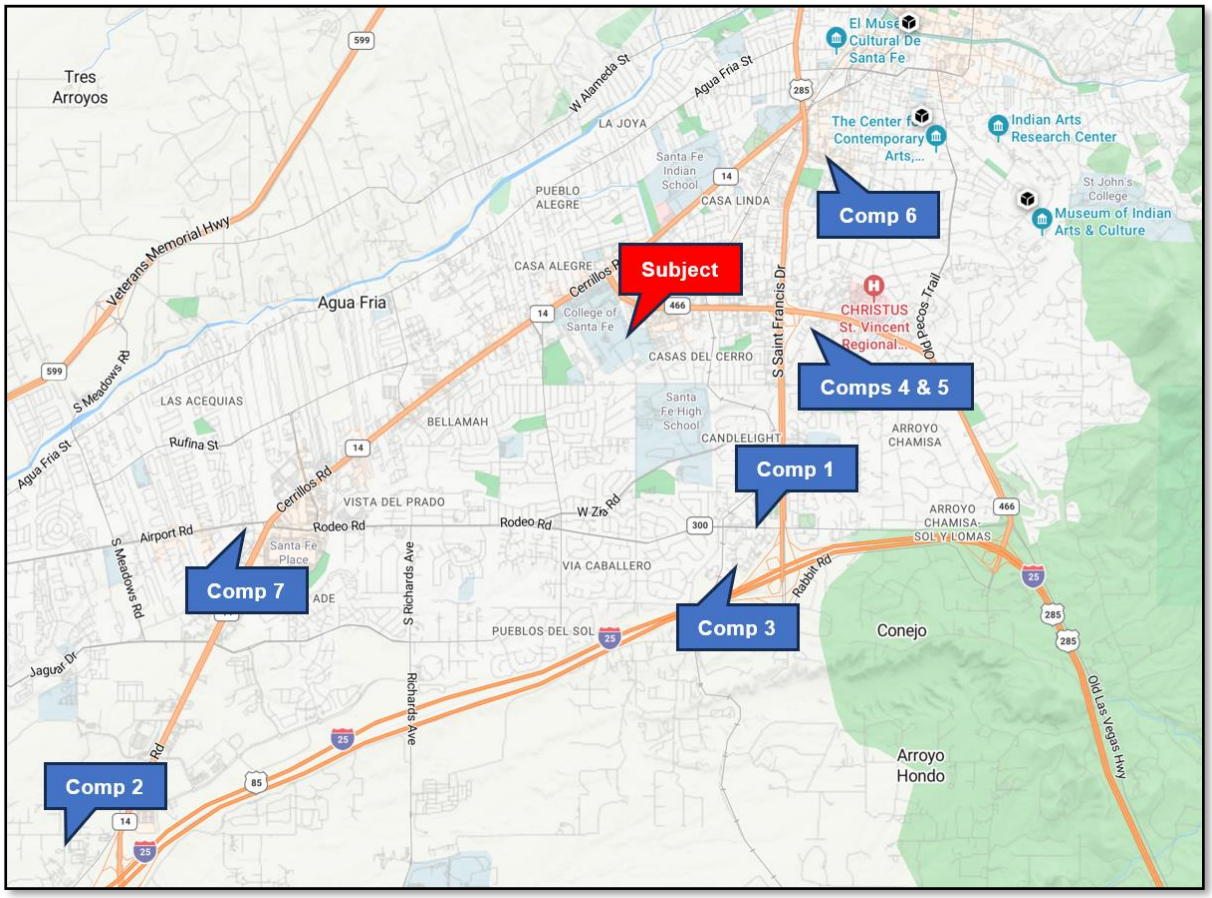

Sales Comparables - Details		
1		▪ **Location: 1474 Rodeo Road** ▪ Grantor: 1474 Rodeo Investors LLC ▪ Grantee: Boyd State Santa Fe, LLC ▪ Date of Sale: 11/2018 ▪ Sales Price: $13,025,000 ▪ Terms: cash/cash equivalent ▪ Land area: 193,007 square feet ▪ Gross building area: 79,679 square feet (3 story) ▪ Net Operating Income (NOI): $1,121,000 o Capitalization Rate: 8.6% ▪ Price per SF: $163.47 ▪ Age: 22 years (Effective age equivalent) ▪ Comments: average quality professional office building – tenancy primarily GSA. ~96% occupancy
2		▪ **Location: 1 Plaza La Prensa** ▪ Grantor: Santa Fe Natural Tobacco Company, Inc ▪ Grantee: NM Portfolio LLC ▪ Date of Sale: 11/2018 ▪ Sales Price: $5,775,000 ▪ Terms: cash/cash equivalent ▪ Land area: 254,390 square feet ▪ Gross building area: 52,253 square feet ▪ Net Operating Income (NOI): n/a - vacant ▪ Price per SF: $110.52 ▪ Age:14 years ▪ Effective age: 12 years ▪ Comments: average quality professional office building previously occupied by the owner. Property has been vacant for multiple years. The buyer has proposed updating building for a tentative GSA lease. The update budget is $1,719,298.

Sales Comparables - Details		

3		▪ **Location: 2945 Rodeo Park Drive East**
		▪ Grantor: 86th Street Associates LLC
		▪ Grantee: Manifest West LLC
		▪ Date of Sale: 12/2018
		▪ Sales Price: $2,100,000
		▪ Terms: cash/cash equivalent
		▪ Land area: 65,537 square feet
		▪ Gross building area: 25,109 square feet
		  o Net Rentable: 23,285 square feet (used in the analysis)
		▪ Net Operating Income (NOI): $226,115
		  o Capitalization rate: 10.8%
		▪ Price per SF: $90.19
		▪ Age:14 years
		▪ Effective age: 14 years
		▪ Comments: average quality professional office building that is subject to leases. New Lease signed immediately prior to sale. Net income and resulting capitalization rate are estimated based on new lease. A portion of the property has been vacant for multiple years.
		▪ ~94% occupancy (includes new lease)

4		▪ **Location: 2044 & 2048 Galisteo** ▪ Grantor: Francesca ▪ Grantee: Galisteo Drive, LLC ▪ Date of Sale: 03/2019 ▪ Sales Price: $1,952,000 ▪ Terms: cash/cash equivalent ▪ Land area: 62,378 square feet ▪ Gross building area: 18,444 square feet ▪ Net Operating Income (NOI): $200,275 o Capitalization Rate: 10.3% ▪ Price per SF: $105.83 ▪ Age: built in 1995 – estimated effective age of 20 years ▪ Comments: average quality professional office building – tenancy primarily GSA. ▪ ~84% occupancy

Sales Comparables - Details		
5		▪ **Location: 2056 Galisteo** ▪ Grantor: Sophia Santa Fe ▪ Grantee: Santa Fe Drive LLC ▪ Date of Sale: 08/2019 ▪ Sales Price: $2,550,000 ▪ Terms: cash/cash equivalent ▪ Land area: 50,074 square feet ▪ Gross building area: 14,500 square feet ▪ Net Operating Income (NOI): $263,925 o Capitalization Rate: 10.4% ▪ Price per SF: $175.86 ▪ Age: built in 2002 – estimated effective age of 15 years ▪ Comments: average quality professional office building/special use – tenancy primarily GSA/magistrate court. 100% occupancy
6		▪ **Location: 525 Camino de Los Marquez** ▪ Grantor: YMC New Mexico Properties, LLC ▪ Grantee: BJ North County Dental Center LLC ▪ Date of Sale: 07/2021 ▪ Sales Price: $7,915,000 ▪ Terms: cash/cash equivalent ▪ Land area: 107,100 square feet ▪ Gross building area: 38,259 square feet ▪ Net Operating Income (NOI): $607,638 o Capitalization Rate: 7.7% ▪ Price per SF: $206.88 ▪ Age: built in 1965 and renovated in 1980, 2013 and 2020 – estimated effective age of 15 years ▪ Comments: average to good quality professional office building – tenancy GSA (NM Environment Department). Note: purchaser was an out of state investor ▪ 100% occupancy

7	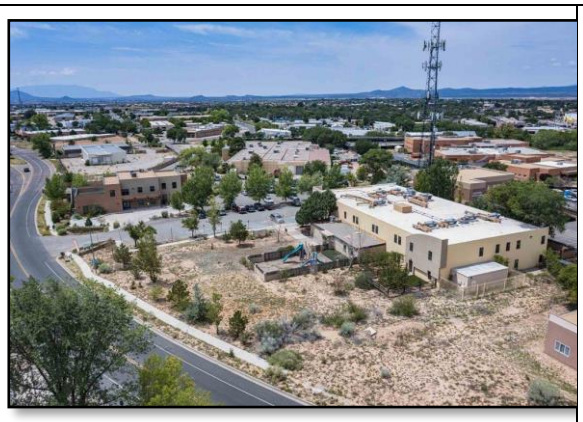	▪ **Location: 2504 Camino Entrada** ▪ Grantor: Yellow Brick Properties LLC ▪ Grantee:Vicki Yeomans, Betty Beachum and others ▪ Date of Sale: 11/30/2021 ▪ Sales Price: $3,786,720 ▪ Terms: cash/cash equivalent ▪ Land area:99,143 square feet ▪ Gross building area: 2 buildings, 22,996 sf and 7,926 sf ▪ Price per SF: $122.46 ▪ Age: built in 1988 – estimated effective age of 25 years ▪ Comments: average quality professional office buildings.

Analysis and Conclusion

Note
Seven comparable sales are presented in the Commercial Sales Chart. Due to the limited sales volume in the subject's neighborhood, the comparables were selected from competing areas in Santa Fe. The comparables represent the range of commercial sales sharing similarity/consistency with the subject. The comparable sales produced a value range from $90.19 per square foot to $206.88 per square foot before adjustment.

Several elements of comparison can affect the value of commercial structures. The elements of comparison and their resulting adjustments fall into two categories: transactional adjustments and property adjustments.

CHART OF ADJUSTMENTS

Category	Adjustment
Transactional	Real property rights conveyed Financing terms Conditions of sale Expenditures made immediately after purchase Market conditions
Property	Physical characteristics Location Economic characteristics Use/zoning Non-realty components value

These elements are analyzed to determine if an adjustment is required. They are discussed below and the findings summarized and reconciled on a comparison grid at the end of the valuation section. The transactional adjustments are applied in sequence. The property adjustments do not need to be applied in a specific sequence. The adjustments are summarized on a chart at the end of this section. Only those items requiring discussion/adjustment are discussed.

Transactional Adjustments

Real Property Rights Conveyed: The subject is leased. The lease is a short term lease. Comparable 2 was vacant at the time of sale. Comparables 1, 3, 4, 5, 6 and 7 were subject to leases.

Sales Comparables
Comp 1: avg rent based on NOI and leased SF: $14.66 psf per year on net basis
Comp 3: avg rent based on NOI and leased SF: $10.33 psf per year on net basis
Comp 4: avg rent based on NOI and leased SF: $12.93 psf per year on net basis
Comp 5: avg rent based on NOI and leased SF: $18.20 psf per year on net basis
Comp 6: avg rent based on NOI and leased SF: $15.88 psf per year on net basis
Comp 7; lease information not available
Subject
leased

With consideration of tenant/lease and the condition/quality of the buildings, an adjustment for real property rights conveyed was not developed, but is considered in the reconciliation.

Financing Terms: None of the sales were known to involve terms of sale other than cash to the seller. No adjustment is made for financing terms.

Conditions of Sale: Conditions of sale relates to any undue pressure on either the buyer or the seller. Comparable 2 was built for an owner/occupier-single tenant, former offices for Santa Fe Natural Tobacco (52k square feet). The original owner was purchased and subsequently relocated. The property remained vacant for several years. The vacancies and marketing occurred during the economic downturn, which likely increased marketing time. For Comparable 2, the owner was not located in New Mexico and had no desire to continue to hold the building. Comparable 3 was constructed for multiple tenants with the primary tenants comprised of governmental entities (FBI and IRS). When the FBI vacated at the end of its lease, this space remained vacant. The owner tried to market the building at a higher listing price, but had no success. It was reported that the seller substantially decreased the sales price to facilitate a quicker sale. These comparables may have been subject to atypical motivation, but were exposed to the market. Comparable 4 was subject to a 16% vacancy and the contract rent for the occupied space was on the low end of the range – established during the economic downturn. Due to the longer nature of the lease, the owner was subject to likely below market rent for a sustained period. Due to the unique attributes of the comparables and the existence/level of any undue pressure, a conditions of sale adjustment is not developed for these comparables, but considered in the final reconciliation.

Conditions of Sale
Comparables 3 and 4 represent the bottom of the range produced by the comparables. These comparables also may have had atypical motivation

Expenditures After Sale: This adjustment is included in the transactional adjustments because it reflects those items that a buyer would have considered part of the price at the time of sale. The subject is comprised of professional offices which may function as single or multi-tenant. Comparable 2 incurred conversion costs subsequent to the sale. Comparable 2 was the former offices for Santa Fe Natural Tobacco. The property was

comprised primarily of open concept areas and warehouse containing minimal delineation. The buyer of the property was in the process of securing a lease with a GSA entity requiring further buildout of the property for the tenant. The estimated cost of the buildout to offices was $1,719,298.

Expenditures After Sale adjustment
Comparable 2: $1,719,298 for buildout to offices

Market Conditions: The next element of comparison which was considered was market conditions (time of sale). The earliest sale on the chart is November 2018 which is 59 months before the effective date of the appraisal. Analysis of a sale and resale of the same property is the most accurate method of determining a time of sale adjustment. The market has experienced a certain amount of fluctuation since the economic downturn. However, overall economic indicators have begun to improve over the past 5 years. Furthermore, the impact of these changes in economic indicators in the real estate market is not yet fully realized, but may put downward pressure on the depreciation in the market. Within improved commercial properties, based on lease rates and vacancies, the leveling-off appears to have begun in 2015. Based on this discussion and the comparables, neither an appreciation rate nor depreciation rate is applied to the comparables.

Property Adjustments

Physical characteristics: Physical factors which were considered for adjustment included size, location, quality, age and functional utility.

Size: Size was the first category examined. Typically, there is an inverse relationship between size and price per square foot, as the size increases the price per square foot decreases. The subject contains a total of 27,757 square feet in a two-story building. The comparable sales range from 14,500 square feet to 79,679 square feet. Examination of the comparables revealed no clear trend in value as a function of size for these comparables. Therefore, the search was extended to other commercial sales. Two sales of warehouse properties that occurred in the same building and at the same time were analyzed.

Size Comparison			
Property	7510 Mallard Way, Unit C	7510 Mallard Way, Unit D	Difference
Price per sf	$128.70	$127.30	-$1.40
Size	2,331 square feet	2,553 square feet	222 square feet
Size adjustment			$0.006/sf of change

This adjustment was based on a size difference of 9.5%. The search is extended outward to other commercial markets in Santa Fe. The sale of 2960 Rodeo Park Dr. W is compared to a previous sale in the same area located at 2056 Galisteo.

Size Comparison			
Property	2960 Rodeo Park Dr. W	2056 Galisteo	Difference
Price per sf*	$225.06	$185.45	$39.61
Size	14,609 square feet	20,948 square feet	6,339 square feet
Size adjustment			$0.006/sf of change

*Adjusted for time

This comparison produced a size adjustment of $0.006 per square foot based on a difference of 6,339 square feet. Three sales of office condos that occurred in the same development are analyzed. The sales were adjusted for time. For the size adjustment, the largest sale was compared to the two smaller sales. These sales occurred within 13 months of each other during a time when the market was appreciating.

SIZE COMPARISON

Property	Date of sale	Size	Price	TOS Adjustment	Change: Size	Change: price	Adjustment $ per sf
2019 Galisteo, N-10	01/2005	3,738	$201.61	13 months $209.47			
2019 Galisteo, N-9A	11/2005	2,286	$222.85	3 months $224.86	1,452	$15.39	$0.011
2019 Galisteo, D-2	02/2006	1,475	$223.73	0 months $223.73	2,263	$14.26	$0.006

This comparison produced size adjustments of $0.011 per square foot based on a difference of 1,452 square feet and $0.006 per square foot based on a difference of 2,263 square feet. These adjustments may have been overstated based on the appreciation in the market at that time. Based on this analysis with specific consideration of the utility/use and size of the subject (large gross) and comparables, a size adjustment of $0.0006 per square foot is extrapolated and applied to the comparables based on the size of the subject.

Age/condition: Age and condition are examined. The age and condition adjustment is combined. The condition, quality and estimated effective age of the comparables is in the following chart. As mentioned earlier in this Valuation section, this analysis is performed "as if" all the deferred maintenance was addressed. As such, the effective age of the subject is estimated to be 10 years.

COMPARABLE EFFECTIVE AGE

No.	Condition	Quality	Estimated Effective Age (EA)
1	Average	Average	22
2	Average to good	Average	12
3	Average	Average	14
4	Average	Average	20
5	Average	Average	15
6	Average	Average to good	15
7	Average	Average	25
Subject	Average	Average	10

Lacking sales in the subject's immediate area the search is extended outward to include all commercial sales in Santa Fe. Four comparisons are made of the adjusted prices of older buildings to newer ones to derive an age adjustment. All the comparisons were adjusted for conditions of sale and time of sale. They are summarized in the following charts.

Age Comparison			
Comparison 1			
Property	2019 Galisteo, Unit N-9 A	1651 Galisteo Units 8,9,10	Difference
Price per sf	$230.53	$196.72	17.2%
Age	1 years	20 years	19 years
Age adjustment			0.90% per year
Comparison 2			
Property	1640 Old Pecos Trail	2019 Galisteo, Unit N-9 A	Difference
Price per sf	$201.25	$230.53	14.5%
Age	15 years	1 years	14 years
Age adjustment			1.04% per year
Comparison 3			
Property	404 Brunn School Rd. C	2590 Camino Entrada	Difference
Price per sf	$218.92	$204.55	7.0%
Age	4 years	12 years	8 years
Age adjustment			0.88% per year
Comparison 4			
Property	1630 Hospital Dr.	2056 Galisteo	Difference
Price per sf	$195.07	$228.82	17.3%
Age	21 years	3 years	18 years
Age adjustment			0.96% per year

Based on these extractions, an age adjustment of 1% per year is applied to the comparables based on their effective age.

Location: Location is one of the most important value determining factors for commercial property. The subject is located in middle of the St. Michaels Drive office node in a commercial node centered between St. Francis Drive and Cerrillos Road. The comparables were selected based on utility/use and are from the subject's neighborhood and competing neighborhoods. Comparable 6 is located on the peripheral of downtown. Comparable 1 and 3 are in the southeast office/commercial node with 3 within the Rodeo Business Park and Comparables 4 and 5 are located in the central office/commercial node, which is centered on Christus St. Vincent Hospital. Comparables 2 and 7 are located at the southern end of the southwest quadrant of the City of Santa Fe in the southwest office/commercial node. Comparison of the comparables' locations did not produce the basis for a location adjustment. Based on the utility/use of the comparables, a location adjustment is not applied to the comparables and the specific location differences are considered in the reconciliation.

Conclusion: The adjustments discussed above are summarized in the following chart. Only those items requiring adjustment have been included.

SALES COMPARISON ADJUSTMENT CHART

Comparable	Subject	Comp. 1	Comp. 2	Comp. 3	Comp. 4	Comp. 5	Comp 6	Comp 7
Sale Price		**$13,025,000**	**$5,775,000**	**$2,100,000**	**$1,952,000**	**$2,550,000**	**$7,915,000**	**$3,786,720**
Conditions of Sale		None	None	Possible Motivation	Possible Motivation	None	None	None
Adjustment		$0	$0	+	+	$0	$0	$0
Expenditures		None	Buildout	None	None	None	None	None
Adjustment		$0	$1,719,298	$0	$0	$0	$0	$0
Market conditions/		11/2018	11/2018	12/2018	03/2019	08/2019	07/2021	11/2021
Adjustment		$0	$0	$0	$0	$0	$0	$0
Preliminary adj. $		**$13,025,000**	**$7,494,298**	**$2,100,000+**	**$1,952,000+**	**$2,550,000**	**$7,915,000**	**$3,786,720**
Comparison unit size (sf)	27,757	79,679	52,253	23,285	18,444	14,500	38,259	30,922
- adjusted $		$163.47	$143.42	$90.19	$105.83	$175.86	$206.88	$122.46
Size Adjustment		$31.15	$14.70	-$2.68	-$5.59	-$7.95	$6.30	$1.90
Age/Cond (EA)	10	22	12	14	20	15	15	25
Adjustment		+12%	+2%	+4%	+10%	+5%	+5%	+15%
Location	St. Michaels	SE	SW-	SE	Central	Central	Central	SW
Final adj. $ per sf		**$217.98**	**$161.28**	**$91.01+**	**$110.27+**	**$176.30**	**$223.84**	**$143.01**

Reconciliation: After considering all factors, the adjusted price per square foot of the comparables is in the following table.

Comparables	Range: Adjusted $/SF	Average: Adjusted $/SF
All: 1-7	$91.01+ to $223.84	$160.53
Comparables 2, and 5-7	$143.01 to $223.84	$176.11
Note		
Based on the attributes of the sales, Comparables 2, 3, 4 included excess vacancy and/or may have been subject to atypical motivation. However, the proposed tenant was identified for Comparable 2 prior to the sale.		

All the comparables were professional offices at the time of sale and share the same/similar utility/use. Comparables 2, 3, and 4 were subject to above market vacancy at the time of sale and likely include similar motivation. However, for Comparable 2, the tenant had been identified for this comparable, which was adjusted for expenditures after sale (finish out). Comparables 3 and 4 produced the lowest adjusted values. The subject's location is centralized and benefits from ready access to any of the other commercial nodes. The primary driver of differences in value is the tenancy/vacancy. The properties with limited vacancy and lower risk tenancy, produced values at the top of the range and the properties with high vacancy produced values at the bottom of the range. These properties are primarily comprised of large units and with a limited market of large tenants, risk increases putting downward pressure on values. The subject has been consistently leased since September of 2020 (through COVID shutdowns and the Writers' Strike). The current owner does not allow long-term leases.

Conclusion: based on this discussion and the attributes of the subject, including current market, age/condition ("as if "totally renovated, tenancy/income and location, emphasis was given to the higher end of the modified range.

ESTIMATED PRICE PER SQUARE FOOT

Estimated Price per Square Foot
$175 per square foot

Final Value per the Sales Comparison Approach

For the final value, the estimated price per square foot is applied to the subject's square footage.

Value Per The Sales Comparison Approach – As If	
$175 per square foot X 27,757 sf =	$4,857,475
Rounded	$4,850,000

Benildus - Income Approach

The subject is currently leased as shown in the summary below.

Lease Summary-	
Tenant	Name
Landlord	City of Santa Fe/Garson Studios
Term	One year Term: renewable current term 8/25/23 through 8/26/24
	Option Terms: one year
Rent	Commencement: 8/25/23 Total Rent at $21.75 per square foot
Lease Basis	• Tenant pays maintenance, janitorial • Landlord pays all utilities, taxes (waved), major maintenance and insurance
	Based on the operating expense division between the landlord and tenant, it is considered closely related to full service lease
Permitted Use	Professional office as related to film production

Direct Capitalization

Definition: Direct Capitalization
A method used to convert an estimate of a single year's income expectancy into an indication of value in one direct step, either by dividing the net income estimate by an appropriate capitalization rate or by multiplying the income estimate by an appropriate factor. Direct capitalization employs capitalization rates and multipliers extracted or developed from market data. Only one year's income is used. Yield and value changes are implied, but not explicitly identified.[9]

The Income Approach is based on the income producing capabilities of the property. For the Direct Capitalization method, a Potential Gross Income (PGI) is estimated from which vacancy loss is deducted to arrive at an Effective Gross Income (EGI). Expenses are then estimated and deducted from the EGI to obtain a Net Operating Income (NOI). The NOI is then capitalized into an indication of value by the application of an overall rate which has been developed through market extraction, development of the Modified Band of Investment and published sources.

It should be noted that this analysis is performed "as if" all the deferred maintenance on the subject is repaired – the subject is completely renovated.

[9] Ibid., p. 53

Market Rent: Rents were researched for buildings with commercial and similar construction with similar/related utility/use in the general area. Based on availability of rent comparables, the search was extended into competing commercial areas in the Santa Fe market. The rent comparables were selected that are generally of the same or similar quality/utility. All the rents are identified based on rent per square foot per year. The comparables are summarized in the following chart and described in more detail on the pages following.

RENT COMPARABLES CHART

No	Location	Leasable area (sf)	Rent sf/year	Lease type
Leases: GSA/Institutional				
1	2905 Rodeo Park Dr. East, Bldg. 1	15,819	$23.94	Full service
2	2905 Rodeo Park Dr. East, Bldg. 4 (portion)	4,687	$25.50	Full service
3	2905 Rodeo Park Dr. East, Bldg. 5	20,000	$30.13	Full service
4	1474 Rodeo Road	37,478	$19.61	Full service
5	1 Plaza La Prensa	46,976	$25.58	Full service
6	39 Plaza La Prensa	38,007	$29.30	Full service
7	142 W Palace	18,099	$16.50	Full service
Additional GSA/Institutional (primary)				
8	1301 Siler Road, A, B/C, E, F	Occupied: 59,079	Average: $22.43	Full service
9	2055 S Pacheco	Occupied: 25,957	Average: $22.20	Full service

Rent Comparables Map

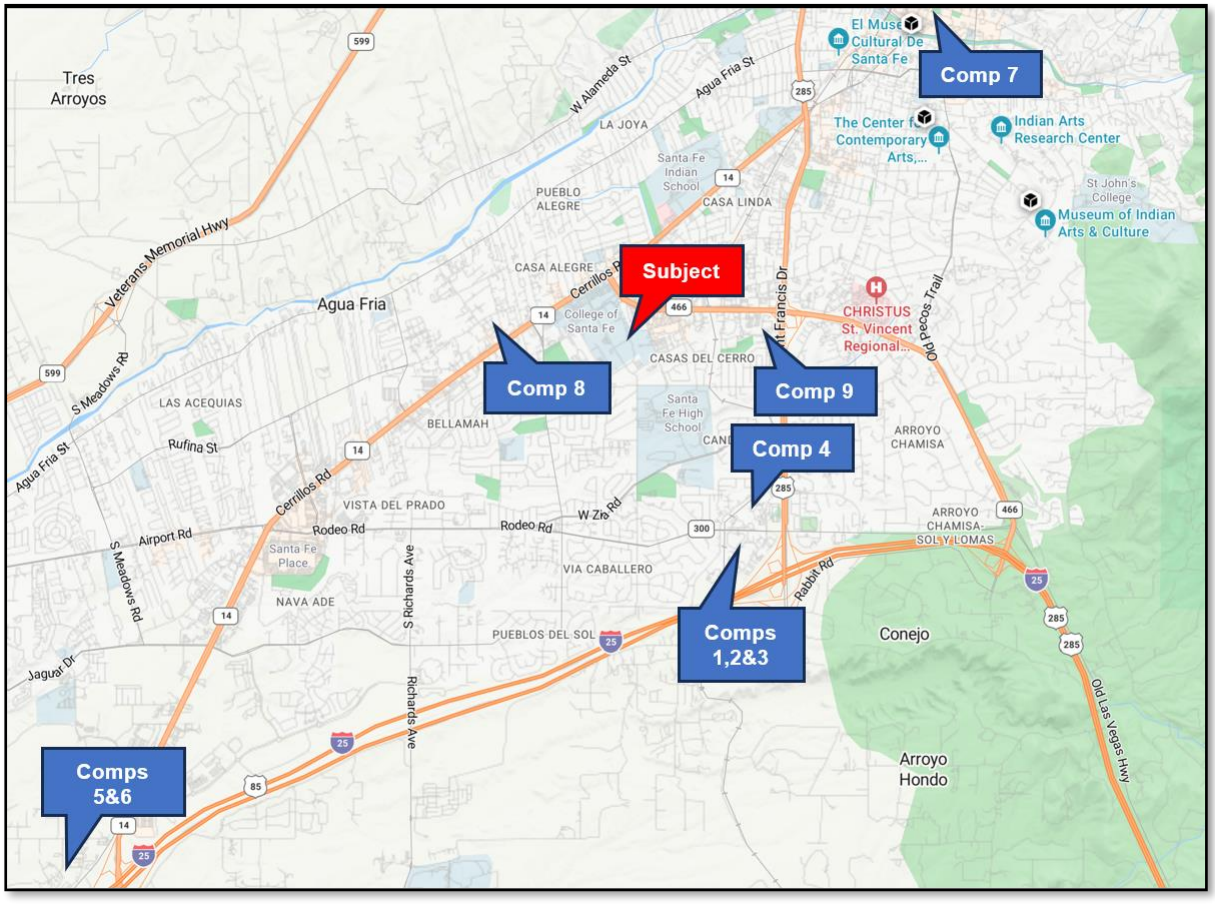

Rent Comparables - Details		
Leases: GSA/Institutional		
1		▪ **Location: 2905 Rodeo Park Dr. East, Bldg 1** ▪ Rental rate: $23.94 o Tenant: NM Environment Department o Term: 6/2001-5/2021 – amended/renewed 2012/2013 ▪ Building Size: 15,819 square feet ▪ Vacancy: 0% ▪ Lease type: Full service ▪ Comments: Located in Rodeo Business Park. ▪ Leased to a governmental entity. Professional offices.
2		▪ **Location: 2905 Rodeo Park Dr East, Bldg 4 (portion of building)** ▪ Rental rate: $25.50 o Tenant: NM Commission for the Blind o Term: 9/2003-8/2023 ▪ Building Size: 4,687 square feet ▪ Vacancy: 0% ▪ Lease type: Full service ▪ Comments: Located in Rodeo Business Park. ▪ Leased to a governmental entity. Professional offices
3		▪ **Location: 2905 Rodeo Park Dr. East, Bldg 5** ▪ Rental rate: $30.13 o Tenant: NM Judicial Information Division o Term: 7/2012-5/2022 – amended/renewed 2012/2013 ▪ Building Size: 20,000 square feet ▪ Vacancy: 0% ▪ Lease type: Full service ▪ Comments: Located in Rodeo Business Park. ▪ Leased to a governmental entity. Professional offices

Rent Comparables - Details		
4		▪ **Location: 1474 Rodeo Road** ▪ Rental rate: $19.61 per square foot per year o Tenant: NM Human Service Department o Term: 09/2013-09/2022 ▪ Building Size: 37,478 square feet (portion of building) ▪ Vacancy: 0% ▪ Lease type: Full service ▪ Comments: Leased to a governmental entity. Professional office. Building is in fair condition. The owner stated that they are going to include $17 per square foot of tenant improvements and an additional $10 per square foot of building improvements.
5		▪ **Location: 1 Plaza La Prensa** ▪ Rental rate: $25.58 per square foot per year o Tenant: NM Human Service Department o Term: 05/2019-04/2029 ▪ Building Size: 46,976 square feet (portion of building) ▪ Vacancy: 0% ▪ Lease type: Full service ▪ Comments: Leased to a governmental entity. Professional office. Building is in average to good condition.
6		▪ **Location: 39 Plaza La Prensa** ▪ Rental rate: $29.30 per square foot per year o Tenant: NM Human Service Department o Term: 10/2008-09/2023 ▪ Building Size: 38,007 square feet ▪ Vacancy: 0% ▪ Lease type: Full service ▪ Comments: Leased to a governmental entity. Professional office. Building is in average condition.

Rent Comparables - Details		
7		▪ **Location: 142 W Palace** ▪ Rental rate: $16.50 per square foot per year o Tenant: Santa Fe County o Term: 12/2013-03/2021 ▪ Building Size: 18,099 square feet ▪ Vacancy: 0% ▪ Lease type: Full service ▪ Comments: Leased to a governmental entity. Professional office. Building is older and in fair condition. It is located in the downtown (BCD zoned), but its utility is limited to commercial/institutional office use, which is atypical for the location. The property is reaching the end of its economic life
Additional		
8		▪ **Location: 1301 Siler Road, Bldgs A, B/C, E, F** ▪ Rental rate: $22.43 per square foot per year o Tenants: NM Department of Health Pharmacy, NM Human Services Department, NM Department of Health o Term: varies ▪ Building Size: occupied 59,079 square feet (61,506 square feet total) ▪ Vacancy: 3.9% ▪ Lease type: Full service ▪ Comments: Leased to governmental entities. Professional office. Buildings are in average to good condition. Portion of building B/C is vacant unfinished: 2,427 sf
9		▪ **Location: 2055 S Pacheco** ▪ Rental rate: $22.20 per square foot per year o Tenants: NM State Treasure, Christus, NM Medical Board, High Country Macula, etc. o Term: varies ▪ Building Size: occupied 25,957 square feet (31,597 square feet total) ▪ Vacancy: 17.8% ▪ Lease type: Full service ▪ Comments: Leased primarily to governmental entities. Professional office. Buildings are in average condition. The vacant space is comprised of two areas. One was recently vacated and the owner states that there have been multiple interested parties

Analysis and Conclusion

Market Rents: In order to estimate market rent, the comparable rents were compared and adjusted. Estimation of market rent involved consideration of the following factors: lease type and attributes, physical attributes, and location. These elements are analyzed to determine if an adjustment is required. The elements are discussed below and the findings summarized and reconciled on a comparison grid.

Lease type: The subject's lease is most closely related to a full service lease. The comparables are leased on a full service basis.

Direct Capitalization Analysis: Lease Type
A full service lease is assumed for the analysis

Rents are primarily dependent on the type of lease. The three common types of leases are net, modified gross and full service.

LEASE TYPE DESCRIPTION

Lease Type	Expenses
Net	Tenant responsible for expenses • Tenant (lessee): All expenses • Landlord (lessor): No expenses (may pay management)
Modified gross (typical)	Expenses are split between tenant and landlord • Tenant (lessee): Janitorial and utilities • Landlord (lessor): Insurance, property taxes, maintenance and management
Full service	Landlord responsible for expenses • Tenant (lessee): No expenses • Landlord (lessor): All expenses

Note
The comparables are based on full service leases and did not require an adjustment for lease type.

Size: Size may also be a factor. A trend could not be extracted from the rent comparables. However, smaller spaces generally rent for more per square foot than larger spaces. Based on the size of the subject building and the comparables, no adjustment for size is applied, but is considered in the market rent reconciliation.

Age/Condition: The comparables have similar utility to the subject; however, the age/condition of the comparables varied. The estimated effective age of the rent comparables is in the following table.

COMPARABLE EFFECTIVE AGE

No.	Estimated Effective Age
1	12 years
2	12 years
3	12 years
4	15 years
5	10 years
6	10 years
7	30 years
Additional	
8	10 years
9	15 years
Subject	18 years

The age/condition adjustment developed in the sales comparison approach is applied to the comparables based on the subject's estimated effective age.

Location: The search for rent comparables included the subject's office node and was extended to competing nodes within Santa Fe. They share the same utility. Based on the utility of the comparables, a location adjustment is not applied, but considered in the reconciliation.

Conclusion: The rents after adjustment are in the following table.

ADJUSTED RENT CHART

No.	Location	Unadjusted Rent/SF/year	Adjusted Rent/SF/year
Leases: GSA/Institutional			
1	2905 Rodeo Park Dr. East, Bldg. 1	$23.94	$22.50
2	2905 Rodeo Park Dr. East, Bldg. 4 (portion)	$25.50	$23.97
3	2905 Rodeo Park Dr. East, Bldg. 5	$30.13	$28.32
4	1474 Rodeo Road	$19.61	$19.02
5	1 Plaza La Prensa	$25.58	$23.53
6	39 Plaza La Prensa	$29.30	$26.96
7	142 W Palace	$16.50	$18.48
Additional GSA/Institutional (primary)			
8	1301 Siler Road Bldgs A, B/C, E, F	Average: $22.43	$20.64
9	2055 S Pacheco	Average: $22.20	$21.53
	Leases	Average	$22.77
	On a full service basis	Minimum	$18.48
		Max	$28.32

Comparables 4 and 7 are at the bottom of the range and are the oldest properties having received varying levels of renovation. Comparable 3 and 6 are at the upper end of the range and are comprised primarily of seasoned leases. Comparables 5 and 6 are located at the southern end of the Southwest Office/Commercial Node.

Note
The upper half of the range is typically comprised of older/seasoned leases and the lower half of the range is typically comprised of newer leases and/or older properties. The subject's landlord does not allow for sublease terms greater than one year.

The subject's rent is not a "true" full-service lease. The tenants pay for maintenance and janitorial. If this estimated expense were added to the existing lease, it would add another $4 per sf and equal $25.75 per sf, which is still within the range of the comparables. The appraiser considers the short terms of the historical leases, as well as the "transitional period", when the City intends to sell the subject property as the primary reasons for the lease rates. As such, most weight is given to the subject's actual rent rate and the comparables are considered good supportive data.

Market Rent (as is)
$25.75 per square foot per year

Potential Gross Income (PGI): Multiplying the market rent times the square footage of the subject yields the potential gross income (PGI) for the subject.

POTENTIAL GROSS INCOME CHART

PGI Analysis	
27,757 square feet x $25.75 per sf per year	$714,743

The total potential gross income is based on the total potential income produced by the subject @ market without consideration of vacancy or expenses.

Vacancy/Collection Loss: Vacancy/Collection Loss must be deducted from the potential gross income to determine the effective gross income (EGI). The subject's office node is the St. Michaels Drive Office Node. Vacancy can be estimated based on the typical lease parameters and turn-over. Estimating a two-to-five-month vacancy with a typical three-year lease yields an annualized vacancy rate of 5.6% percent to 13%. However, this does not take into account a reasonable renewal probability. The vacancy and collection loss in the analysis is primarily a function of expectations based on the characteristics of the subject, which is related to film production. Because production groups have shorter leases, it is expected that vacancy will be much higher compared to typical professional office leases.

The property type is considered to have shorter leases, but longer marketing times when vacant. Based on this discussion and the subject's attributes, a vacancy of 15% is selected and applied to the potential gross income which results in a vacancy deduction.

Vacancy/Collection loss
15%

Effective Gross Income (PGI): Deducting vacancy from the PGI results in an effective gross income (EGI).

EGI Analysis		
PGI		$714,743
Vacancy	15%	($107,211)
Total:		$607,531

Expenses: The income approach is being calculated based on full service leases. Rents are heavily dependent on the type of lease. As previously discussed, the three usual types of leases are net, modified gross and full service. The rent comparables are comprised of full service leases. The expenses are categorized as fixed expenses, variable expense and replacement reserves.

Expense Classification	
Fixed	Operating expenses such as property taxes and insurance that generally do not vary with occupancy and that prudent management will pay for whether the property is occupied or vacant.10
Variable	Operating expenses that generally vary with the level of occupancy or the extent of services provided.11
Reserves	An allowance that provides for the periodic replacement of building components that wear out more rapidly than the building itself and must be replaced during the building's economic life; sometimes referred to as *reserves* or *reserves for replacement*.12 Such as roof covering, carpet, specific structural items and equipment with limited economic life expectancies

Subject Expenses: The subject is leased; however, the subject's historical expenses would not be representative and were not provided for the appraisal.

10 Ibid., p. 93
11 Ibid., p. 245
12 Ibid., p. 197

Comparable Expenses: Marc Bertram, a principle of ownership of comparables 1-3, 8 and 9, previously stated that the annual expenses ranged from $7.25 per square foot per year to $7.50 per square foot per year. These are reflective of full service GSA leases. In addition, the historical expenses associated with a GSA lease at 2056 Galisteo were $7.67 in 2013, $7.78 in 2014 and $7.51 in 2015.

Market Expenses: In the market, the cost of the utility expense and janitorial expense usually ranges from $2.00 to $4.00 per square foot depending on how many times per week the building is cleaned and the level of the building's energy efficiency. The cost of property taxes, insurance, and maintenance generally range from $2.00 to $4.00 per square foot depending on the age and amount of maintenance to the building. Management, as previously mentioned is frequently a negotiable item, typically calculated based on 4 % to 6% of effective gross income. The management expense in the Santa Fe market is generally carried by the landlord. Two additional historical expense comparables are included in the following table. These comparables each did not include some aspect of a full service lease.

EXPENSE COMPARABLES

Location	1630 Hospital		2025 Pacheco	
Size (sf)		10,249		39,110
Expenses	**Annual**	***per sf***	**Annual**	***per sf***
Prop Tax	$13,647	*$1.33*	$28,903	*$0.74*
Insurance	$3,130	*$0.31*	$2,998	*$0.08*
Maint./Repairs	$11,174	*$1.09*	$135,978	*$3.48*
Janitorial	Tenant	*n/a*	$31,828	*$0.81*
Utilities	Tenant	*n/a*	$120,325	*$3.08*
Management	$8,683	*$0.85*	n/a	*n/a*
Total	$36,634	*$3.57*	$320,032	*$8.18*

The first expense comparable is an older medical office building in good condition. The second expense comparable is an older building and is also leased to a governmental entity. Several of the expenses for the second expense comparable, 2025 Pacheco Street, appear to be outside of the range produced by the other expense comparable. The maintenance expenses, and utilities expense are significantly higher than these expenses for the other property. The insurance expense was based on an underpayment for the year. The actual insurance expense is $10,089 or $0.26 per square foot. The maintenance expense and the utilities expense are significantly above

the range produced by the other expense comparable. The detail showed that several charges for capital improvements were included in the maintenance expense which isn't typical for the market. When these expenses are removed, the maintenance expense drops to $60,423 or $1.54 per square foot. Finally, the owner of the property, Robert Berkelo, stated that the utilities are high based on the HVAC system which is old and inefficient and there are plans to replace the HVAC system which should lead to significant savings.

Expense Conclusion: Based on the subject's attributes, an expense of $9.50 per square foot is selected. Additionally, a 3% management fee is added.

RECONCILED EXPENSES - SUBJECT

Subject Size x Expense per SF	Total Expense
27,757 @ $9.50 per sf per year + 3% of EGI =	$281,917

Net Operating Income: Deducting the lessor's expenses from the effective gross income (EGI) results in a net operating income (NOI). The NOI needs to be capitalized into an indication of value. The Net Operating Income is capitalized into an indication of value by dividing the NOI by an appropriate capitalization rate.

NOI Analysis	
EGI	$607,531
Less: Expenses	($281,917)
NOI	$325,614

Capitalization Rate: The capitalization rate is the relationship between the sales price and the net income of the property. Inherent in this rate are all the influences of current market conditions, i.e. financing conditions, current interest rates, tax considerations, potential appreciation/depreciation possibilities, the personal needs and requirements of a purchaser and other factors. Two methods were used to derive a capitalization rate to be used in the analysis. The first was to extract capitalization rates from actual sales. The second method was the Modified Band of Investment. This method assigns a weighted percentage to the equity return and the mortgage rate. These are then added to give an overall capitalization rate. Sales of commercial properties in Santa Fe have generally shown overall rates in the range of 6.00% to 10.0%. The market extracted rates have tended to rise over the past few years with signs of leveling off over the past year. Five of the sales comparables produced a capitalization rate.

CAPITALIZATION RATES – SALES COMPARABLES

Sales Comparable	Capitalization Rate
1	8.6%
3	10.8%
4	10.3%
5	10.4%
6	7.7%

At the time of sale, Sales Comparables 1 (older building) and 5 are subject to governmental leases and Sales Comparables 3 and 4 are subject to governmental and non-governmental leases. Sales Comparable 4 also had atypical vacancy. Comparable 5's lease was seasoned and based on the remaining term and higher rent was considered higher risk. In addition, these are primarily comprised of larger single spaces and lack the versatility to meet market demand when it changes.

Note
Based on this, these capitalization rates are considered in the upper half of the range.

The search was extended to all commercial sales within Santa Fe. The comparables with similar utility to the subject receive most consideration. Based on the limited amount of data, the search was expanded to include 2008. Sales of commercial properties in Santa Fe have generally shown overall rates in the range of 6% to 10%. With the lower end of the market made up mostly of properties in the downtown and investor grade properties. These capitalization rates are derived by extraction from the market and are listed in the following chart.

CAPITALIZATION RATES (MARKET DERIVED)

Sale	Date of sale	Capitalization rate	Use
1672 Hospital Drive	07/08	7.0%	Office – medical
2590 Camino Entrada	09/08	7.9%	Office - medical
1474-1480 St. Francis	05/09	9.2%	Office
422 W. San Francisco	08/09	8.0%	Office/Retail - downtown
1215 Paseo de Peralta	09/09	8.3%	Office – downtown
1442-C St. Francis Drive	10/09	6.5%	Office
1925 Aspen Dr., Unit 801 A&B	05/10	7.2%	Office
221 Canyon Road	12/10	5.4%	Retail – downtown
421 St. Michaels Drive	01/11	6.5%	Office
404 Kiva Court Unit E	03/11	8.8%	Office
1421 Luisa Street Unit I	04/11	8.6%	Office
237 East Palace Avenue	08/11	7.0%	Retail - downtown
490-A West Zia Road	12/12	7.7%	Office - medical
2014 Cerrillos Road	03/13	8.5%	Restaurant
1221 Luisa	02/2015	6.4%	Office
1409 Luisa	04/2015	8.3%	Office
3242 Cerrillos Road	11/2015	7.4%	Retail
530-532 Canyon Road	04/2016	5.5%	Retail – downtown/Canyon

3777 Cerrillos	07/2016	8.2%	Retail - center
3232 Cerrillos	09/2017	7.0%	Retail
126-128 W Water Street	02/2018	7.5%	Retail - downtown
1474 Rodeo Road	11/2018	8.6%	Office
2945 Rodeo Park Dr E	12/2018	10.8%	Office
320-328 Guadalupe Station	05/2019	6.5%	Retail/Restaurant - downtown
3261 Cerrillos	06/2019	6.5%	Restaurant
3023 Cielo Ct Units A,B,C,D	04/2021	8.6%	Office/Services
Note			
Sales volume in the market has been limited since 2008			

Subject – Capitalization Rate
Based on the table and the subject's attributes, primarily age/condition, utility/use and vacancy, there is downward pressure on the capitalization rate. A market derived capitalization rate of 7.0% to 8.5% is deemed appropriate.

The modified band of Investment requires utilization of an equity capitalization rate which is a rate expressing the relationship between one year's pre-tax cash flow (NOI less the annual debt service) and the equity investment. Equity capitalization rates may be estimated from current so-called "safe rates" such as CDs, bonds, and T-bills, or they may be market extracted. Since equity capitalization rates (equity dividend rates) tend to change with the economy, only the most recent sales are applicable.

It is also possible to build an equity capitalization rate using a known "safe" rate and adding percentage points for loss of liquidity and risk. “Safe rates” are derived from such sources as insured certificates of deposit and AAA bonds. At this time, they lie generally in the range of 3.0% to 6.0%. Risk for the subject was viewed as moderate. Therefore, two points were added for risk. An additional 2% was needed to compensate for loss of liquidity. This resulted in a range of 7.0% to 10% for an equity capitalization rate when derived in this manner. Analysis of the sale of 1401 Maclovia produced an equity capitalization rate of 8.2% which is within the estimated range. Based on the attributes of the subject and relative investor grade, the lower end of the range was weighted and 8% is selected for the equity capitalization rate.

The modified band of investment assigns a weighted percentage to the two factors that make up the total capitalization rate. The weighted percentage was derived from the loan-to-value ratio. Therefore, the mortgage factor was assigned a percentage of 70% and the equity factor is 30% (100%-70%). The annual mortgage constant for 5% interest based on a five-year fixed term based on a 20-year amortization is 0.079 or 7.9%. The calculation of the capitalization rate per the modified band of investments is

in the following table. The Modified Band of Investment produced a capitalization rate of 7.9%.

Modified Band Of Investments		
8% Return to Equity		
Annual Constant	0.0792 x .70 =	0.0554
Equity Requirement	0.0800 x .30 =	0.0240
	Total	0.0794

Derivation of the capitalization rate to be utilized in the income approach requires reconciliation of the market-derived capitalization rate and the Modified Band of Investment. The market extracted rates indicate a range for the subject of 8.0% to 9.0% with the most likely being the lower half of the range. The Modified Band of Investment produced a capitalization rate of 7.94%. Further support was sought from the PwC Real Estate Investor Survey (formerly Korpacz).

PWC – 3rd QUARTER 2023 – CAP RATES

Category	Capitalization Rates
National Secondary Office Market	6.00%-10.25% Average: 8.16%
National Suburban Office Building Market	5.00%-8.00% Average: 6.54%

With this support and with most emphasis on the market extracted rates, with specific emphasis on the tenancy and physical attributes (**all deferred maintenance has been addressed**) of the subject, a capitalization rate of 7.25% is concluded and is applied to the subject.

Income Approach Summary: Capitalizing the NOI results in a value indication. The income approach summary follows.

Income Approach Summary	
PGI	$714,743
Less: Vacancy @ 15%	($107,211)
EGI (PGI – Vacancy)	$607,531
Less: Expenses	($281,917)
NOI (EGI – Expenses)	$325,614

Final Value per the Income Approach

The Net Operating Income (NOI) must be capitalized in order to achieve a final value per the income approach.

Value Per the Income Approach: Direct Capitalization	
Final Value: NOI / Cap Rate $325,614 / 7.25% =	$4,491,226
Rounded	$4,500,000

Benildus - Reconciliation of Preliminary Values

Subject	
Benildus Hall	
Preliminary Value Indications	
Sales Comparison Approach	$4,850,000
Income Approach: Direct Capitalization	$4,500,000

For the appraisal, the sales comparison approach and the income approach (direct capitalization) are developed for the appropriate/respective preliminary values. Each of the approaches to value has validity and applicability to the appraisal problem. Ideally speaking, if each was done exactly correctly (implying uniform data), they would result in identical value estimates. However, the real estate market is not an exact arena. No two sales are exactly the same and rarely, if ever, are two commercial properties exact duplicates. Therefore, it is the responsibility of the appraiser to apply logic and experience to the data provided.

Contributory Value

Cost Approach: The cost approach is appropriate for new or nearly new construction. Based on the age of the improvements (excess of five years), the cost approach was not developed.

Sales Comparison: The sales comparison approach is a method of estimating value which involves direct comparison of the subject to other sales. The reliability of the sales comparison approach is dependent upon the degree of similarity of the comparables. The search for improved sales comparables was extended to November 2018. The comparables available for the sales comparison approach are considered ample. The adjustments were market derived and quantitative in nature. The value derived from this approach should be considered reliable.

Income Approach: The income approach is developed using the direct capitalization method.

Direct Capitalization: the gross rental income of the subject is estimated by determining the market rent from a survey of competing properties. The vacancy/collection loss and expenses are applied to the gross income in order to develop the net operating income. A capitalization rate was estimated by two methods, market extraction and modified band of investment, and supported by the PwC Cap Rate Survey. The net operating

income was divided by the capitalization rate to yield a value by the income approach. The rent comparables for the income approach are commercial properties in the subject's neighborhood and competing neighborhoods. They are considered adequate. The supporting data for the income approach is sufficient, and the value resulting from this approach should also be considered reliable.

Reconciliation: Reconciliation to a final value estimate involved consideration given to all approaches to value depending on their reliability. Investor buyers of income-producing properties typically place most weight on the income approach; however, the sales comparison approach offered three good comparables. As such the sales comparison is given supportive weight.

Conclusion: Based on the data presented in the report, it is my opinion that the most probable contributory value of the Benildus Hall (subject to easements and restrictions of record) 'as is' as of November 15, 2023 is:

PRELIMINARY FINAL VALUE

Subject: Benildus Hall		
Contributory Value – 'As If'	Fee simple	**Four Million Six Hundred Thousand Dollars $4,600,000**

It should be noted that this analysis is performed "as if" all the deferred maintenance on the subject is repaired – the subject is completely renovated.

Final Value Benildus

The initial value produced for the Benildus structure was completed “as if” the deferred maintenance was addressed, and all repairs were completed. A Facility Assessment Report was completed by Wilson Company on January 11, 2023, to ascertain the cost to address the building’s deferred maintenance. According to the report the cost is $1,759,269. This cost to applied to the preliminary value to produce a final value for the subject below.

Additionally, this building lacks sufficient parking. The buyer and sellers of the subject have agreed to a parking lease, until such time as land can be purchased. This drafted agreement was provided to the appraiser: however, the terms were provided orally from the seller representative. The lease term is 20 years with the ability to be renewed and the lease price is $15,000 per year. The appraiser produced a net present value through a discounted cash flow analysis. A 5% discount was used. The analysis produced a value of $251,445.34, which is rounded to $250,000.

Component	**Value**
Preliminary value for Benildus	$4,600,000
Cost to address deferred maintenance	$1,759,269
Less the discount for lack of parking	$250,000
Final Value	$2,840,731
Rounded	**$2,590,000**

Garson Studios – Case Study – Sales Comparison Approach

The Garson Studios Structure combines three soundstages, professional office space and a small theater. This property type is not uncommon in New Mexico; however, there is little sales data available. As such, an expanded sales comparison approach is not performed.

Next to the subject property, the former tennis facility known as Shellaberger sold in March of 2022 for $6,700,000. Shortly after the sale, the buyers were approached by the film industry for consideration of a transition from the historic (tennis) use to soundstage/professional office. After negotiations, the transition began, and the new facility has adapted and is being rented as a soundstage/office use. According to the new owners the facility required $1,500,000 for the soundstages to be retrofitted and soundproofed. An additional $1,000,000 is needed for electrical upgrades. Therefore, the cost of the structure with land is $9,200,000. There was a substantial amount of land included in the sale of the facility and after subtracting the “excess land” the true cost of the soundstage/office was $7,800,000 or $128.35 per square foot.

When comparing the Shellaberger facility to the Garson Studios one must consider the make-up of the two structures. Shellaberger has a greater amount of soundstage as a portion of the structure compared to Garson. Because the rent produced by the soundstage is greater than the office, and Shellaberger has more soundstage and is newer, it is considered superior.

Garson Studios - Income Approach

The subject is currently leased as shown in the summary below.

Lease Summary-	
Tenant	Aspect
Landlord	City of Santa Fe/Garson Studios
Term	One year Term: renewable current term 8/25/23 through 8/26/24
	Option Terms: one year
Rent	Commencement: 8/25/23 Studios, A, B and C and parking – rent varies per month
Lease Basis	• Full service
Permitted Use	film production

Direct Capitalization

Definition: Direct Capitalization
A method used to convert an estimate of a single year's income expectancy into an indication of value in one direct step, either by dividing the net income estimate by an appropriate capitalization rate or by multiplying the income estimate by an appropriate factor. Direct capitalization employs capitalization rates and multipliers extracted or developed from market data. Only one year's income is used. Yield and value changes are implied, but not explicitly identified.[13]

The Income Approach is based on the income producing capabilities of the property. For the Direct Capitalization method, a Potential Gross Income (PGI) is estimated from which vacancy loss is deducted to arrive at an Effective Gross Income (EGI). Expenses are then estimated and deducted from the EGI to obtain a Net Operating Income (NOI). The NOI is then capitalized into an indication of value by the application of an overall rate which has been developed through market extraction, development of the Modified Band of Investment and published sources.

It should be noted that this analysis is performed "as if" all the deferred maintenance on the subject is repaired – the subject is completely renovated.

[13] Ibid., p. 53

Market Rent: Rents were researched for similar buildings. The management of the Shellaberger facility were contacted. They stated that full-service lease for the soundstage portion of the facility will rent for between $2.50 and $3.00 per square foot per month.

A rent analysis completed by a local appraiser, Art Neudek, MAI. Within his report rent comparables in Los Angeles found were between $25 and $50 per square foot on a triple net basis. He stated that the soundstage rent (at Garson Studios) which included parking behind the building, should be $25 per square foot per year on a triple net basis. This does not include the office/storage/theater space in the structure.

The office portion of the building is important and useable because production requires more than a soundstage, for example, photography, make-up, conference rooms, and administration. If this space wasn't available on-site, the production would go off-site and into Santa Fe's professional office market top rent space. Based on the analysis provided in the Benildus sections of this report, market rent is $25.75 per square foot per full-service basis; however, the balance of the space in the building has storage areas and a small theater, with limited uses.

In the months between February of 2023 and July of 2023 the subject had an average contract rent of $137,412 per month. It should be noted that 2023 was a poor year for the demand of film production space due to a writers strike. As such, $137,000 per month is represented as a potential income and the subject's historic income.

Potential Gross Income (PGI):

POTENTIAL GROSS INCOME CHART

PGI Analysis	
$137,000 X 12 months	$1,644,000

The total potential gross income is based on the total potential income produced by the subject @ market without consideration of vacancy or expenses.

Vacancy: Vacancy/Collection Loss must be deducted from the potential gross income to determine the effective gross income (EGI). The subject structure is directly used for film/multimedia production and has a history of being leased. Over the past several years, the film industry has been challenged with COVID and a writer's strike. Additionally, productions rent terms are commonly between 6 months and 10 months. It would be unfair to use occupancy data from (unusual) times as representative; however, occupancy rates are lower than typical professional office or light industrial markets. The property type is considered to have shorter leases, but much longer marketing times when vacant. Based on this discussion and the subject's attributes, a vacancy of 20% is selected and applied to the potential gross income which results in a vacancy deduction.

Vacancy
20%

Effective Gross Income (PGI): Deducting vacancy from the PGI results in an effective gross income (EGI).

EGI Analysis		
PGI		$1,644,000
Vacancy	20%	($328,800)
Total:		$1,315,200

Expenses: This income approach is being calculated based on full-service leases. Rents are heavily dependent on the type of lease. As previously discussed, the three usual types of leases are net, modified gross and full service. The expenses are categorized as fixed expenses, variable expense and replacement reserves.

Expense Classification	
Fixed	Operating expenses such as property taxes and insurance that generally do not vary with occupancy and that prudent management will pay for whether the property is occupied or vacant.
Variable	Operating expenses that generally vary with the level of occupancy or the extent of services provided.
Reserves	An allowance that provides for the periodic replacement of building components that wear out more rapidly than the building itself and must be replaced during the building's economic life; sometimes referred to as *reserves* or *reserves for replacement*. Such as roof covering, carpet, specific structural items, and equipment with limited economic life expectancies

Subject Expenses: The subject is currently leased; however, the subject's historical expenses would not be representative and were not provided for the appraisal.

Expense	**Costs**
Maintenance @ $10.00* per sf	$492,000
Tax based on $4,500,000	$48,235
Management @ 3% of EGI	$39,456
Insurance @$0.30 per sf	$14,760
Total	$610,530

***Reflects maintenance after all deferred maintenance has been addressed**

Net Operating Income: Deducting the lessor's expenses from the effective gross income (EGI) results in a net operating income (NOI). The NOI needs to be capitalized into an indication of value. The Net Operating Income is capitalized into an indication of value by dividing the NOI by an appropriate capitalization rate.

NOI Analysis	
EGI	$1,315,200
Less: Expenses	($610,530)
NOI	$704,670

Capitalization Rate: The capitalization rate is the relationship between the sales price and the net income of the property. Inherent in this rate are all the influences of current market conditions i.e., financing conditions, current interest rates, tax considerations, potential appreciation/depreciation possibilities, the personal needs and requirements of a purchaser and other factors. Two methods were used to derive a capitalization rate to be used in the analysis. The first was to extract capitalization rates from actual sales. The second method was the Modified Band of Investment. This method assigns a weighted percentage to the equity return and the mortgage rate. These are then added to give an overall capitalization rate. Sales of commercial properties in Santa Fe have generally shown overall rates in the range of 6.00% to 10.0%. The market extracted rates have tended to rise over the past few years with signs of leveling off over the past year.

The search was extended to all commercial sales within Santa Fe. The comparables with similar utility to the subject receive most consideration. Based on the limited amount of data, the search was expanded to include 2008. Sales of commercial properties in Santa Fe have generally shown overall rates in the range of 6% to 10%. With the lower end of the market made up mostly of properties in the downtown and investor grade properties. These capitalization rates are derived by extraction from the market and are listed in the following chart.

CAPITALIZATION RATES (MARKET DERIVED)

Sale	Date of sale	Capitalization rate	Use
1672 Hospital Drive	07/08	7.0%	Office – medical
2590 Camino Entrada	09/08	7.9%	Office - medical
1474-1480 St. Francis	05/09	9.2%	Office
422 W. San Francisco	08/09	8.0%	Office/Retail - downtown
1215 Paseo de Peralta	09/09	8.3%	Office – downtown
1442-C St. Francis Drive	10/09	6.5%	Office
1925 Aspen Dr., Unit 801 A&B	05/10	7.2%	Office
221 Canyon Road	12/10	5.4%	Retail – downtown
421 St. Michaels Drive	01/11	6.5%	Office
404 Kiva Court Unit E	03/11	8.8%	Office
1421 Luisa Street Unit I	04/11	8.6%	Office
237 East Palace Avenue	08/11	7.0%	Retail - downtown
490-A West Zia Road	12/12	7.7%	Office - medical
2014 Cerrillos Road	03/13	8.5%	Restaurant
1221 Luisa	02/2015	6.4%	Office
1409 Luisa	04/2015	8.3%	Office
3242 Cerrillos Road	11/2015	7.4%	Retail
530-532 Canyon Road	04/2016	5.5%	Retail – downtown/Canyon

3777 Cerrillos	07/2016	8.2%	Retail - center
3232 Cerrillos	09/2017	7.0%	Retail
126-128 W Water Street	02/2018	7.5%	Retail - downtown
1474 Rodeo Road	11/2018	8.6%	Office
2945 Rodeo Park Dr E	12/2018	10.8%	Office
320-328 Guadalupe Station	05/2019	6.5%	Retail/Restaurant - downtown
3261 Cerrillos	06/2019	6.5%	Restaurant
3023 Cielo Ct Units A,B,C,D	04/2021	8.6%	Office/Services
Note			
Sales volume in the market has been limited since 2008			

Subject – Capitalization Rate
Based on the table and the subject's attributes, primarily age/condition, utility/use and vacancy, there is upward pressure on the capitalization rate. A market derived capitalization rate of 7.5% to 9.0% is deemed appropriate.

The modified band of Investment requires utilization of an equity capitalization rate which is a rate expressing the relationship between one year's pre-tax cash flow (NOI less the annual debt service) and the equity investment. Equity capitalization rates may be estimated from current so-called "safe rates" such as CDs, bonds, and T-bills, or they may be market extracted. Since equity capitalization rates (equity dividend rates) tend to change with the economy, only the most recent sales are applicable.

It is also possible to build an equity capitalization rate using a known "safe" rate and adding percentage points for loss of liquidity and risk. “Safe rates” are derived from such sources as insured certificates of deposit and AAA bonds. At this time, they lie generally in the range of 3.0% to 6.0%. Risk for the subject was viewed as moderate. Therefore, two points were added for risk. An additional 2% was needed to compensate for loss of liquidity. This resulted in a range of 7.0% to 10% for an equity capitalization rate when derived in this manner. Analysis of the sale of 1401 Maclovia produced an equity capitalization rate of 8.2% which is within the estimated range. Based on the attributes of the subject and relative investor grade, the lower end of the range was weighted and 8% is selected for the equity capitalization rate.

The modified band of investment assigns a weighted percentage to the two factors that make up the total capitalization rate. The weighted percentage was derived from the loan-to-value ratio. Therefore, the mortgage factor was assigned a percentage of 70% and the equity factor is 30% (100%-70%). The annual mortgage constant for 5% interest based on a five-year fixed term based on a 20-year amortization is 0.079 or 7.9%. The calculation of the capitalization rate per the modified band of investments is

in the following table. The Modified Band of Investment produced a capitalization rate of 7.9%.

Modified Band Of Investments		
8% Return to Equity		
Annual Constant	0.0792 x .70 =	0.0554
Equity Requirement	0.0800 x .30 =	0.0240
	Total	0.0794

Derivation of the capitalization rate to be utilized in the income approach requires reconciliation of the market-derived capitalization rate and the Modified Band of Investment. The market extracted rates indicate a range for the subject of 8.5% to 10.0% with the most likely being the lower half of the range. The Modified Band of Investment produced a capitalization rate of 7.94%.

Further support was sought from the PwC Real Estate Investor Survey (formerly Korpacz). Based on the First Quarter publication, capitalization rates in most property sectors are on the rise.

With this support and with most emphasis on the market extracted rates, with specific emphasis on the tenancy and physical attributes **("as if" all deferred maintenance has been addressed**) of the subject, a capitalization rate of 8% is concluded and is applied to the subject.

Income Approach Summary: Capitalizing the NOI results in a value indication. The income approach summary follows.

Income Approach Summary	
PGI	$1,644,000
Less: Vacancy @ 20%	($328,800)
EGI (PGI – Vacancy)	$1,315,200
Less: Expenses	($610,530)
NOI (EGI – Expenses)	$704,670

Final Value per the Income Approach

The Net Operating Income (NOI) must be capitalized in order to achieve a final value per income approach.

Value Per the Income Approach: Direct Capitalization	
Final Value: NOI / Cap Rate $704,670 / 8.0% =	$8,808,375
Rounded	**$8,800,000**

Garson Studios - Reconciliation and Preliminary Value Conclusion

Subject	
Garson Studios	
Value Indications	
Study	Less than $128 per sf
Income Approach: Direct Capitalization	$8,800,000

For the appraisal, a sales comparison approach could not be completed because there were not enough adequate comparable sales. In leu of this approach, a neighboring property was examined as supportive data. This structure was formerly a tennis facility and now has been transitioned into a soundstage/office structure. Because this has a greater ratio of soundstage to office, has more rentable soundstage and is in better condition, it is considered far more superior than the subject. Only supportive weight is given to this analysis.

Cost Approach: The cost approach is appropriate for new or nearly new construction. Based on the age of the improvements (excess of five years), the cost approach is not developed.

Income Approach: The income approach is developed using the direct capitalization method.

Direct Capitalization: the gross rental income of the subject is estimated by determining the market rent from a survey of competing properties. The vacancy/collection loss and expenses are applied to the gross income in order to develop the net operating income. A capitalization rate was estimated by two methods, market extraction and modified band of investment, and supported by the PwC Cap Rate Survey. The net operating income was divided by the capitalization rate to yield a value by the income approach. The rent comparables for the income approach are commercial properties in the subject's neighborhood and competing neighborhoods. They are considered adequate. The supporting data for the income approach is sufficient, and the value resulting from this approach should also be considered reliable.

Reconciliation: Reconciliation to a final value estimate involved consideration given to all approaches to value depending on their reliability. Investor buyers of income-producing properties typically place most weight on the income approach. Only a small amount of weight is attributed to the neighboring sale property analysis.

Conclusion: Based on the data presented in the report, it is my opinion that the most probable contributory value (subject to easements and restrictions of record) in the Garson Studios 'as is' as of November 15, 2023 is:

PRELIMINARY FINAL VALUE

Subject: Garson Studios		
Contributory Value – 'As If'	Fee simple	**Eight Million Eight Hundred Thousand Dollars $8,800,000**

Final Value Garson Studios

The initial value produced for the Garson Studios structure was completed “as if” the deferred maintenance was addressed, and all repairs were completed. A Facility Assessment Report was completed by Wilson Company on January 4, 2023, to ascertain the cost to address the building’s deferred maintenance. According to the report the cost is $2,696,459. This cost to applied to the preliminary value to produce a final value for the subject below.

Component	Value
Preliminary value for Benildus	$8,800,000
Cost to address deferred maintenance	$2,696,459
Final Value	$6,103,541
Rounded	**$6,100,000**

Driscoll – Income Approach

The Driscoll building was formerly an athletic facility. Approximately one half of the structure was a gymnasium, and the other half was comprised of exercise rooms, locker rooms, racquetball courts and an entry. Upon this appraiser's initial inspection, the building was described as "in the process of being converted into a soundstage, where the gymnasium will be the soundstage and the remaining rooms will be converted into offices". This made sense because the basketball court flooring had been converted into flooring that is typical for soundstages.

It has come to the attention of the appraiser that soundstage development is inappropriate due to structural issues with the building. As such, the building will be appraised based as a "utility structure" as is needed and demand exists. It should be noted that the structure rents for approximately $30,000 per month in its current state.

Extraordinary Assumption
According to the appraiser the Driscoll structure should be converted into a soundstage with the remaining space used as supportive office. There have been some structural issues identified that could make the conversion of the building inappropriate. If the structure is found to be structurally adequate or financially feasible to be renovated to be adequate, the results of this appraisal are subject to change.

It should be noted that this valuation does consider the incorporation of the deferred maintenance report. The structure can/does produce income in its current condition. As such, this valuation analysis is performed in a "as is" condition of the structure.

Potential Gross Income (PGI): Multiplying the market rent times the square footage of the subject yields the potential gross income (PGI) for the subject.

POTENTIAL GROSS INCOME CHART

PGI Analysis	
$30,000 X 12 months	$360,000

The total potential gross income is based on the total potential income produced by the subject @ market without consideration of vacancy or expenses.

Vacancy: Vacancy/Collection Loss must be deducted from the potential gross income to determine the effective gross income (EGI). The subject structure is directly used for film/multimedia production and has a history of being leased. Over the past several years, the film industry has been challenged with COVID and a writer's strike. Additionally, productions rent terms are commonly between 6 months and 10 months. It would be unfair to use occupancy data from (unusual) times as representative; however, occupancy rates are lower than typical professional office or light industrial markets. The property type is considered to have shorter leases, but much longer marketing times when vacant. Based on this discussion and the subject's attributes, a vacancy of 20% is selected and applied to the potential gross income which results in a vacancy deduction.

Vacancy
20%

Effective Gross Income (PGI): Deducting vacancy from the PGI results in an effective gross income (EGI).

EGI Analysis		
PGI		$360,000
Vacancy	20%	($72,000)
Total:		$288,000

Expenses: This income approach is being calculated based on full service leases. Rents are heavily dependent on the type of lease. As previously discussed, the three usual types of leases are net, modified gross and full service. The expenses are categorized as fixed expenses, variable expense and replacement reserves.

Expense Classification	
Fixed	Operating expenses such as property taxes and insurance that generally do not vary with occupancy and that prudent management will pay for whether the property is occupied or vacant.
Variable	Operating expenses that generally vary with the level of occupancy or the extent of services provided.
Reserves	An allowance that provides for the periodic replacement of building components that wear out more rapidly than the building itself and must be replaced during the building's economic life; sometimes referred to as *reserves* or *reserves for replacement*. Such as roof covering, carpet, specific structural items and equipment with limited economic life expectancies

Subject Expenses: The subject is currently leased; however, the subject's historical expenses would not be representative and were not provided for the appraisal.

Expense	Costs
Maintenance @ $7.00 per sf	$177,600
Tax based on $850,000	$9,111
Management @ 3% of EGI	$8,640
Insurance @$0.30 per sf	$6,660
Total	$202,011

Net Operating Income: Deducting the lessor's expenses from the effective gross income (EGI) results in a net operating income (NOI). The NOI needs to be capitalized into an indication of value. The Net Operating Income is capitalized into an indication of value by dividing the NOI by an appropriate capitalization rate.

NOI Analysis	
EGI	$288,000
Less: Expenses	($202,011)
NOI	$85,989

Capitalization Rate: The capitalization rate is the relationship between the sales price and the net income of the property. Inherent in this rate are all the influences of current market conditions i.e., financing conditions, current interest rates, tax considerations, potential appreciation/depreciation possibilities, the personal needs and requirements of a purchaser and other factors.

With this support and with most emphasis on the market extracted rates, with specific emphasis on the tenancy and physical attributes ("as is") of the subject, a capitalization rate of 9.0% is concluded and is applied to the subject.

Income Approach Summary: Capitalizing the NOI results in a value indication. The income approach summary follows.

Income Approach Summary	
PGI	$360,000
Less: Vacancy @ 20%	($72,000)
EGI (PGI – Vacancy)	$288,000
Less: Expenses	($202,011)
NOI (EGI – Expenses)	$85,989

Preliminary Value per the Income Approach

The Net Operating Income (NOI) must be capitalized in order to achieve a preliminary value per the income approach.

Final Value Per the Income Approach: Direct Capitalization	
Value: NOI / Cap Rate $85,989 / 9.0% =	$955,433
	$950,000

Extraordinary Assumption
According to the appraiser the Driscoll structure should be converted into a soundstage with the remaining space used as supportive office. There have been some structural issues identified that could make the conversion of the building inappropriate. If the structure is found to be structurally adequate or financially feasible to be renovated to be adequate, the results of this appraisal are subject to change.

Excess Land - Sales Comparison Approach

The subject's excess land is 136,525 square feet in size. The valuation is comprised of the sales comparison approach, which is typically the only approach appropriate to the appraisal of vacant land and there is adequate data and support for the adjustments.

Definition: Sales Comparison Approach
The process of deriving a value indication for the subject property by comparing sales of similar properties to the property being appraised, identifying appropriate units of comparison, and making adjustments to the sale prices (or unit prices, as appropriate) of the comparable properties based on relevant, market-derived elements of comparison. The sales comparison approach may be used to value improved properties, vacant land, or land being considered as though vacant when an adequate supply of comparable sales is available.[14]

While there are seldom exact duplicate properties available to a buyer, the prices paid for similar properties are indicative of value. In this approach to value a common denominator is used in comparing sales to the subject's land. In this particular case, the price per square foot was used. The initial search for sales was limited to land with similar utility/use-shared Highest and Best Use. Based on the limited number of sales in general, the search was extended to include commercial sales sharing attributes and competing neighborhoods in Santa Fe. The comparables are summarized in the following chart and described individually on the pages following the chart.

COMMERCIAL VACANT LAND COMPARABLES

No.	Location	Date of Sale	Sales Price	Size (sf)	Price Per sf
1	5011 Las Soleras Drive	08/2016	$1,583,842	349,787	$4.53
2	6820 Cerrillos Road	10/2016	$1,350,000	217,364	$6.21
3	5376 Beckner Road	10/2017	$1,200,000	291,765	$4.11
4	2952 Rodeo Park Dr West	10/2017	$1,800,000	344,560	$5.22
5	2977 Rodeo Park Dr East	12/2017	$1,188,317	148,583	$8.00
6	Lot 2-Richards Avenue (north of Cerrillos)	03/2018	$1,875,000	317,552	$5.90
7	2981 Galisteo Road	01/2020	$1,100,000	275,517	$3.99
8	5200 Beckner Road (Lot 2B)	01/2020	$3,544,655	495,756	$7.15
9	Lot 4-A1 - 4900 Hernandez Rd	06/2020	$2,172,576	324,261	$6.70
Note					
Comparables 1, 4, 6, 8 and 9 were purchased for multi-family development. Comparables 2, 3, 5 and 7 are commercial tracts that share utility/potential with the multi-family comparables, but also include some commercial development potential					

[14] Appraisal Institute, The Dictionary of Real Estate Appraisal, 7th ed., (Chicago: Appraisal Institute, 2022), p. 170

Land Sales Comparables Map

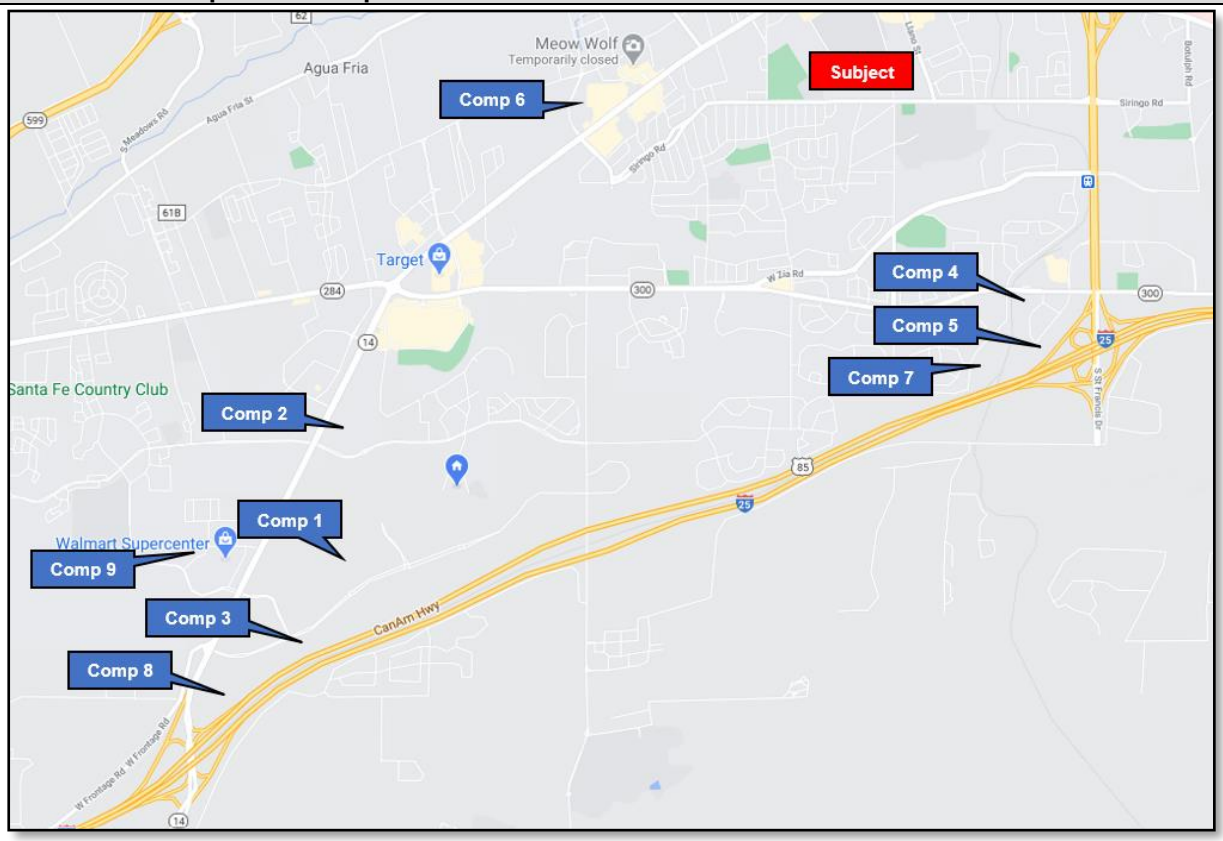

Land Sales Comparables - Details		
1		• **Location: 5011 Las Soleras Drive (Lot 10)** • Grantor: Las Soleras Center, LLC • Grantee: Spectrum Acquisitions Santa Fe • Date of Sale: 08/2016 • Sales Price: $1,583,842 • Terms: cash/cash equivalent • Land area: 8.03 acres or 349,787 square feet • Price per SF: $4.53 • Comments: Located in Las Soleras proximity to I-25. Purchased for development of assisted living facility.
2		• Address: 6820 Cerrillos Road • Date of sale: 10/2016 • Grantor: Cloverdale LLC • Grantee: Carmax • Price: $1,350,000 • Terms: Cash to seller • Land area: 4.99 acres or 217,364 SF • Price per SF: $6.21 • Zoning: C-2 • Comments: Purchased with adjacent property at 6800 Cerrillos: assemblage. Property is improved with a dilapidated hotel/service station with aged/limited infrastructure. Improvements to be demolished: estimate $160,000. Rear of tract has slopes and a portion of flood plain. Flood plain can be used for open space (open space requirement without water harvesting: 25%). The area in the flood plain represents an area less than 25% of the entire site. Based on this, the gross size of the site is used in the price per square foot calculation. However, based on the slopes, the rear of the site not in the flood plain likely has less utility. Green: Flood plain
3		• **Location: 5376 Beckner Road (Lot 28-F1)** • Grantor: Beckner Road Equities • Grantee: Presbyterian • Date of Sale: 10/2017 • Sales Price: $1,200,000 • Terms: cash/cash equivalent • Land area: 6.698 acres or 291,765 square feet • Price per SF: $4.11 • Comments: Located in Las Soleras adjacent to I-25. Purchased for use for support services for Presbyterian Hospital.

Land Sales Comparables - Details		
4		• **Location: 2952 Rodeo Park Dr West** • Grantor: Jeb Rob • Grantee: Titan • Date of Sale: 10/2017 • Sales Price: $1,800,000 • Terms: cash/cash equivalent • Land area: 344,560 square feet • Price per SF: $5.22 • Comments: Located in Rodeo Business Park. It has frontage on Rodeo Park Dr West and Rodeo Road. Purchased for development of apartments.
5		▪ **Location: 2977 Rodeo Park Dr East** ▪ Grantor: SFMC Investments II ▪ Grantee: Titan ▪ Date of Sale: 12/2017 ▪ Sales Price: $1,188,317 ▪ Terms: cash/cash equivalent ▪ Land area: 148,583 square feet ▪ Price per SF: $8.00 • Comments: Located in Rodeo Business Park. Purchased for development of self-storage

Land Sales Comparables - Details		
6		• **Location: Lot 2 Richards** • **(north of Cerrillos)** • Grantor: Hyder • Grantee: KLG 26 (Kassam) • Date of Sale: 03/2018 • Sales Price: $1,875,000 • Terms: Real Estate Contract – interest rate is below market, but due to the relatively short period, the impact is considered minimal • Land area: 317,552 square feet or 7.29 acres • Price per SF: $5.90 • Zoning: C-2 • Comments: Located in commercial node between big box retailers in a secondary location to Cerrillos Road. Purchased for multi-family development.
7	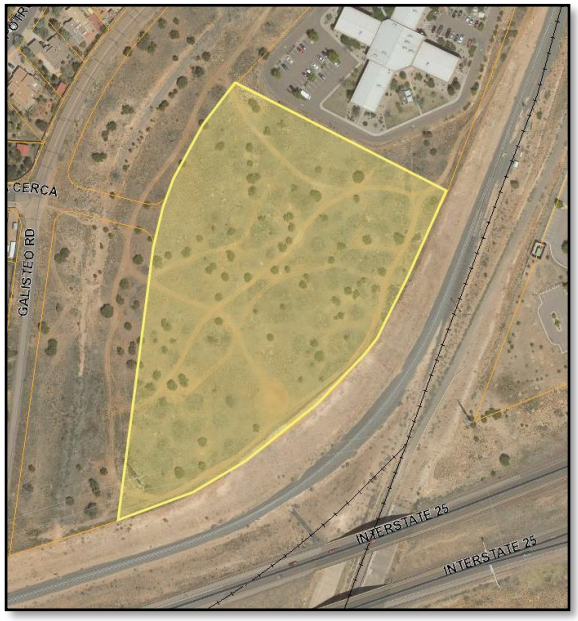	• **Location: 2981 Galisteo Road** • Grantor: B&E LP • Grantee: Anchorum • Date of Sale: 01/2020 • Sales Price: $1,100,000 • Terms: cash/cash equivalent • Land area: 275,517 square feet or 6.325 acres • Price per SF: $3.99 • Zoning: BIP • Comments: Located in Rodeo Business Park, but isn't accessed from within the park. Access is through the residential neighborhood to the west. Purchased for low intensity office or similar/related use after further subdivision.

Land Sales Comparables - Details		
8		• **Location: 5200 Beckner Road** • Grantor: The Tanager Company LLC • Grantee: TA Las Soleras, LLC • Date of Sale: 01/2020 • Sale Price: $3,544,655 • Sale Terms: Cash equivalent • Land Area: 495,756 square feet • Price per SF: $7.15 • Zoning: C2 • Comments: Las Soleras Development (residential, institutional and commercial development-local, regional and national) in a high profile/visibility location. Property purchased for development of apartments.
9		• **Location: 4900 Hernandez Road Lot 4-A1** • Grantor: Henry Oliver III Family Limited Partnership • Grantee: Next Generation Contracting LLC • Date of Sale: 06/2020 • Sale Price: $2,172,576 • Sale Terms: Cash/Cash equivalent • Land Area: 324,261 square feet • Price per SF: $6.70 • Zoning: I1 • Comments: Entrada Contenta – developed lot at the back of the development. Property purchased for apartments.

Analysis and Value Conclusion

The comparables represent the most recent sales of vacant land parcels that share the same general attributes of the subject. Several elements of comparison can affect the value of vacant land. The elements of comparison and their resulting adjustments fall into two categories: transactional adjustments and property adjustments.

CHART OF ADJUSTMENTS

Category	Adjustment
Transactional	Real property rights conveyed Financing terms Conditions of sale Expenditures made immediately after purchase Market conditions
Property	Physical characteristics Location Economic characteristics Use/zoning Non-realty components value

These elements are analyzed to determine if an adjustment is required. They are discussed below and the findings summarized and reconciled on a comparison grid at the end of the land valuation section. Only those items requiring adjustment are discussed. The transactional adjustments are applied in sequence. The property adjustments do not need to be applied in a specific sequence.

Transactional Adjustments

Real property rights conveyed: All of the sales were fee simple.

Financing terms: Comparables 1-5 and 7-9 are believed to be cash or cash equivalent. Comparable 6 was purchased with a real estate contract (REC). It was reported to be below market, but due to the short term of the REC, the impact of the bellow market rate had limited materiality. No adjustment was made to the comparables for financing/terms of sale.

Conditions of sale: Conditions of sale relates to any undue pressure on either the buyer or the seller. None of the comparables required an adjustment for Conditions of Sale.

Expenditures after sale: Comparable 2 was improved at the time of sale. The buyer intends to demolish the improvements and redevelop the site. The estimated demolition expense for this comparable is in the following table.

Comparable	Demolition Estimate
2	$160,000

None of the other comparables required any expenditure-after-sale.

Market conditions:

Comparables: Date of Sale
The sales span a time period of 86 months from the first sale to the date of valuation, November 15, 2023.

Based on the current market and improvement/appreciation in some of the submarkets, it is reasonable to expect values might have changed over that time period. The most accurate measure of change in value is the comparison of a sale and resale of the same property. The subject is comprised of vacant land (primarily) with a highest and best use of multi-family/high density development. The comparables include tracts purchased for multi-family development and in city commercial lots that share locational attributes and potential. Over the past three years, the market has produced varying levels of appreciation. Lacking the volume of large land sales, the search was extended to smaller lots.

Sales of lots on Thomas Road/Court were analyzed. These sales occurred during the beginning of the recovery.

Time of Sale Comparison		
Comparison 1		
Property	Date	$/SF
3812 Thomas Road – Lot 14	02/2016	$3.81
3816 Thomas Court – Lot 13	07/2017	$4.65
Difference	17 months	22.05%
Adjustment-per month		1.30%
Comparison 2		
Property	Date	$/SF
3808 Thomas Road – Lot 15	02/2016	$3.28
3816 Thomas Court – Lot 13	07/2017	$4.65
Difference	17 months	41.77%
Adjustment-per month		2.46%

The listing broker for these properties was consulted. He stated that the original sales in 2016 had been held for a long time. Once they sold and the market was

showing additional signs of recovery, the increased demand and lack of inventory in this property class (light industrial/business park) drove the price increase. He felt the overall market was showing varying degrees of appreciation, but this portion of the market showed an extreme price appreciation, probably due to the significant price depreciation that occurred during the downturn.

The residential market has been particularly dynamic since 2018 with a range of appreciation from 0% to 1% per month. Based on the range, the median residential lot value in Santa Fe is used as the basis of comparison. The annual residential lot sales in the City of Santa Fe from the MLS are in the following table.

Year	Residential Lot Median Sales Price
2018	$185,000
2019	$150,000
2020	$176,000
2021	$245,000
2022	$240,250

Based on this table, the average residential lot sale has shown an appreciation rate of 0.5% per month [($240,250/$185,000)-1 divided by 60 months]. It should be noted that the subject is a mixed-use development and the residential component of the property may be comprised of multiple residential uses: single family to multi family. In addition, larger properties didn't consistently show the same level of appreciation and appears to have started later.

Based on this discussion and the subject's attributes, including large size, mixed-use and range of use, an appreciation rate of 0.4% per month (+0.4% per month), which is consistent with the historical appreciation rates in the Santa Fe, is extrapolated for the comparables beginning in January of 2019, through December of 2022.

Note
Application of the market conditions adjustments are applied to the comparables based on the time between recordation of the sale and the effective date of the appraisal – the month of the date of recordation and the month of the effective date of value are not included.

Property Adjustments

Physical characteristics: Physically, the comparable lots are all commercial lots (multi-family, other) within the city and surrounding area and share similar attributes. The sizes of the comparables range from 148,583 square feet to 495,756 square feet. Normally, as the size of a site increases the price per square foot will decrease. The

comparables did not form the basis of a comparison. Therefore, the search is extended to competing commercial markets in Santa Fe. Two sales of commercial properties within Santa Fe are compared. The comparison is based on the price per square foot after adjustment for market conditions.

SIZE COMPARISON

Property	Market condition adjusted $ per sf*	Size	Adjustment
2947 Rodeo Park East	$9.12	24,829	
Tract C-12-A - Rodeo Park Dr. East	$7.83	72,750	
Difference	-$1.29	-47,921	$0.027 per 1,000 sf

*Market condition adjusted

A size adjustment was found by comparison of the sale of two commercial properties on Cerrillos Road located in the subject's neighborhood. The first sale is adjusted for time based on the time-of-sale adjustment previously estimated.

SIZE COMPARISON

Property	$ per sf	Size	Adjustment
3561 Cerrillos Rd	$14.16*	45,477	
2600 Cerrillos Rd	$12.92	129,373	
Difference	-$1.24	83,896	$0.015 per 1,000 sf

*Market condition adjusted

This comparison produced an adjustment of $0.015 per 1,000 square feet. However, size trends within the comparable data are conflicting. The subject is significantly larger in aggregate than the range produced by the comparables. Based on this, with consideration of the subject's size in aggregate, the sales comparables and these comparisons, a size adjustment of $0.002 per 1,000 square feet is extrapolated.

Location: Location is one of the most important value determining factors for commercial property due to high traffic exposure. The comparables and subject are located within the same general neighborhood and competing neighborhoods. The locations of the comparables and subject are located in the following table.

COMPARABLE LOCATION

No.	Location
1	Las Soleras, with visibility from internal to development and from I-25
2	Location on Cerrillos Road on a major entry point to Santa Fe
3	Las Soleras, with visibility from internal to development and from I-25/adjacent to I-25
4	Rodeo Business Park – on Rodeo Road
5	Rodeo Business Park, visibility from internal to development and from I-25/adjacent to I-25
6	Location secondary to Cerrillos Road in an area of commercial development
7	Rodeo Business Park, limited to no visibility from development; visibility from I-25/adjacent to I-25
8	Las Soleras, with visibility from internal to development and from I-25
9	Entrada Contenta – anchored by Walmart, in a secondary location
Subject	Siringo Road and Alumni Drive at the entry to the Midtown development. Subject lots are located in a centralized location with ready access to all the quadrants in the city.

The locations of the comparables are throughout the City of Santa Fe and relative consistency with the subject. However, it should be noted that the subject is located in a centralized location in Santa Fe and is the farthest north in the city. Comparables 1, 3 and 8 are located within Las Soleras (area of growth/new housing); Comparables 4, 5 and 7 are located within Rodeo Business Park (south of the subject on the north side of I-25/identified as the southeast quadrant); and Comparable 9 is located within Entrada Contenta (west of Las Soleras). The subject based on utility and location should compete well with these developments once complete. Based on the locational attributes and relative similar utility, a location adjustment is not applied to the comparables, and specific location attributes are considered in the reconciliation.

Conclusion: The adjustments are summarized in the following adjustment chart. Only those items requiring adjustment are included.

LAND SALES ADJUSTMENT CHART:

Comparable	Subject	1	2	3	4	5	6	7	8	9
Sale Price ($)		**$1,583,842**	**$1,350,000**	**$1,200,000**	**$1,800,000**	**$1,188,317**	**$1,875,000**	**$1,100,000**	**$3,544,655**	**$2,172,576**
Expenditures		$0	$160,000	$0	$0	$0	$0	$0	$0	$0
Market conditions/	11/2023	08/2016	10/2016	10/2017	10/2017	12/2017	03/2018	01/2020	01/2020	06/2020
Adjustment		$304,098	$228,480	$230,400	$345,600	$228,156	$360,000	$154,000	$496,252	$260,709
Preliminary adjusted $		**$1,837,940**	**$1,418,480**	**$1,430,400**	**$2,145,600**	**$1,416,473**	**$2,235,000**	**$1,254,000**	**$4,040,907**	**$2,433,285**
Comparison unit size (sf)	243,187 sf	349,787	217,364	291,765	344,560	148,583	317,552	275,517	495,756	324,261
- adjusted $		$5.40	$6.53	$4.90	$6.22	$9.53	$7.03	$4.55	$8.15	$7.50
Size Adjustment		$0.21	-$0.05	$0.10	$0.20	-$0.19	$0.15	$0.06	$0.51	$0.16
Final adjusted Sale $ per sf		**$5.61**	**$6.48**	**$5.00**	**$6.42**	**$9.34**	**$7.18**	**$4.61**	**$8.66**	**$7.66**

Reconciliation

Comparables	Range: Adjusted $/SF	Average: Adjusted $/SF
All: 1-9	$4.61 to $9.34	$6.77

Comparables 1, 3 and 8 are within the Las Soleras (mixed-use development); Comparable 2 is located on Cerrillos Road and Comparable 6 is located on Rufina in a secondary location to Cerrillos Road; Comparable 9 is located in the Entrada Contenta (anchored by Walmart – mixed-use development); and Comparables 4, 5 and 7 are in Rodeo Business Park. Comparable 6 is a commercial tract purchased for the development of apartments. The subject includes attributes similar to all the comparables: primary and secondary/tertiary locations, high to moderate visibility as well as commercial residential utility (multi-family). Comparables 1-5, 7-8 and 9 are located near I-25 at major entry points to Santa Fe. Comparable 6 is located further north in a more traditional commercial area. However, it is located in a secondary location to Cerrillos Road. The subject is well located/centralized in the city and is subject to the Midtown LINC and benefitted by the master planning of the Midtown development. With consideration of this discussion and the subjects' attributes, the upper end of the range is weighted and $9.00 per square foot is selected.

Final Value – Excess land	
$9 per square foot X 195,275 sf =	$1,757,475
Rounded	$1,760,000

Final Value

To produce a final value for the subject the various contributory values of the structures (with inherent lands) are considered. Based on a lot coverage analysis, the appraiser determined that there was excess land. Lastly, because there are structures that have no more economic life, an estimate of value to demolish and remove these structures is discounted from an overall value. A summary of the final value is shown below.

Component	**Value**
Benildus Hall - Office	$2,590,000
Garson Studios – Soundstage/Office	$6,100,000
Driscoll – (future) Soundstage/Office	$950,000
Excess land	$1,760,000
Final Value	**$11,400,000**

Extraordinary Assumptions
The property is subject to at least two City of Santa Fe Resolutions (No. 2018-54 and 2022-12), which result in the proposed, and now assumed, rezoning from a R-5 Residential Zone to a C-2 General Commercial District. If this assumption should prove to be inaccurate, the subject's value could be impacted.
The property has had two Phase 1 and one Phase 2 Environmental Site Assessment Reports completed and it is assumed any and all environmental concerns were addressed. If this assumption should prove to be inaccurate, the subject's value could be impacted.
The subject has excess land. No survey or engineering report has been provided to the appraiser to calculate the excess land. The appraiser has utilized lot coverage ratios in order to produce an amount of excess land. If this assumption should prove to be inaccurate, the subject's value could be impacted.
According to the appraiser the Driscoll structure should be converted into a soundstage with the remaining space used as supportive office. There have been some structural issues identified that could make the conversion of the building inappropriate. If the structure is found to be structurally adequate or financially feasible to be renovated to be adequate, the results of this appraisal are subject to change.
Note: If these assumptions should prove inaccurate, the subject's value could be impacted.

ADDENDA

MIDTOWN MASTER PLAN ‘AT A GLANCE’

MIDTOWN
SANTA FE

PROPOSED MASTER PLAN

AT-A-GLANCE

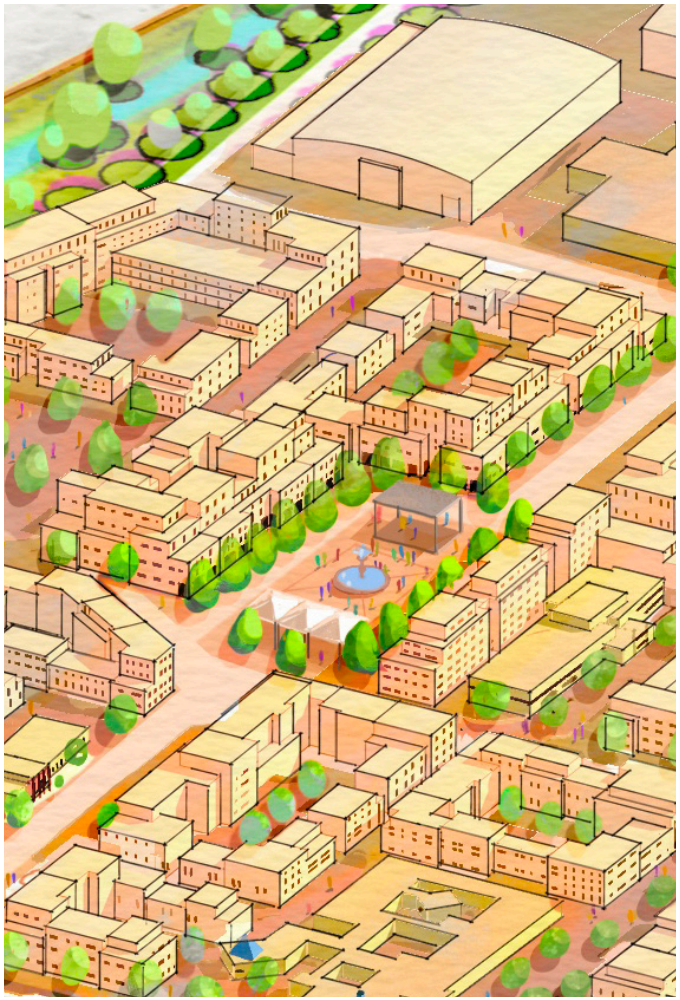



The Midtown Master Plan

To create a dynamic new center for Santa Fe this Plan takes into account necessary physical elements and intangible cultural and social considerations that are critical to support a vibrant community at the Midtown Site. Plans include two key components:

Midtown Community Development Plan

Defines social, cultural, and programming goals and articulates implementation policies for development at the Midtown Site, including established affordable housing goals.

Master Plan

Sets the physical legal requirements and the physical framework for development. It includes regulations for what will get built on the Midtown Site, and policy guidance for how new development and improvements around the Site can be complementary.

It can be thought of as providing the physical "container" for the programming and policy concepts described in the Community Development Plan.

Sets a long-term vision for a new kind of Santa Fe neighborhood.

The Plan lays the foundation for a sustainable, walkable new center for Santa Fe that embodies local culture, climate and ambition for the future.

Is flexible without compromising community values.

Since the Midtown Site may develop over many years, the Plan provides flexibility to respond to changing conditions while establishing clear requirements for plan elements that are critical for achieving the community's vision.

Acknowledges Santa Fe's history but is forward looking.

Santa Fe has a rich history that informs its present and inspires its future. Similarly, the Midtown's Site history will catalyze its future through the reuse of existing buildings and expansion of film studio and public uses.

Holds future development to a high standard.

The Plan includes specific standards that future developments on the Midtown Site must follow. These standards will support a development that is accessible, beautiful, and inviting to all.

Supports and connects existing neighborhoods.

The Plan prioritizes safe and convenient connections between the Midtown Site and nearby neighborhoods, providing current residents access to new amenities and community uses at the Midtown Site.

Is a plan for everybody!

The Midtown Site will become a new center for Santa Fe, with open spaces, community uses, and new amenities that will serve all Santa Feans. Better connectivity and mobility will make the Site easier, safer and more convenient to reach across the City.



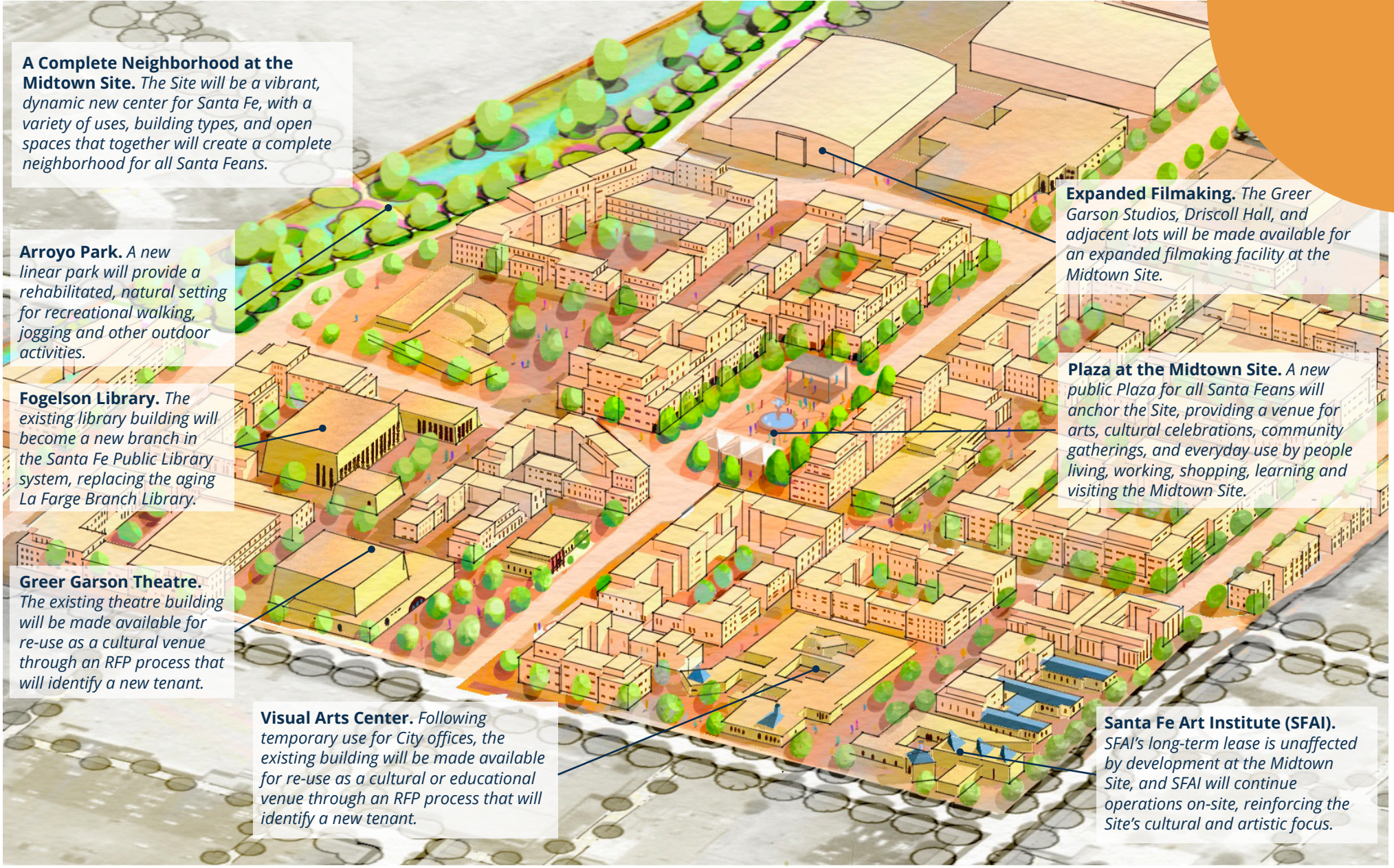

A NEW CENTER FOR SANTA FE

The Midtown Site will be a center for arts, culture, celebrations and everyday life, anchored by a new Plaza and community-serving uses in historic buildings.

connecting communities



MOBILITY AND ACCESS

New streets and paseos, and improvements to existing streets, will make the Midtown Site more accessible and provide better connections to nearby neighborhoods and destinations.

People Walking and Rolling. *All streets on the Midtown Site will include shaded sidewalks and crosswalks at intersections. Pedestrian paseos will provide easy access between destinations and help to reduce walking distances at the Site. The Plan provides guidance for how these networks can extend across greater the Midtown Site.*

People Riding Bikes. *All streets on the Midtown Site will be comfortable for people with varying levels of bike riding confidence. Marked bicycle lanes and multi-use paths will provide dedicated routes for people riding bikes within and across the Site.*

People Taking Transit. *New external pedestrian connections to transit stops along Cerrillos Road, St. Michael's Dr and Siringo Rd will make taking transit to and from the Site easier and more convenient.*

People Driving Cars. *While other modes of travel will be prioritized at the Midtown Site, studies for traffic and parking have shown that planned facilities will be able to accommodate future vehicle traffic generated by activities at the Site.*

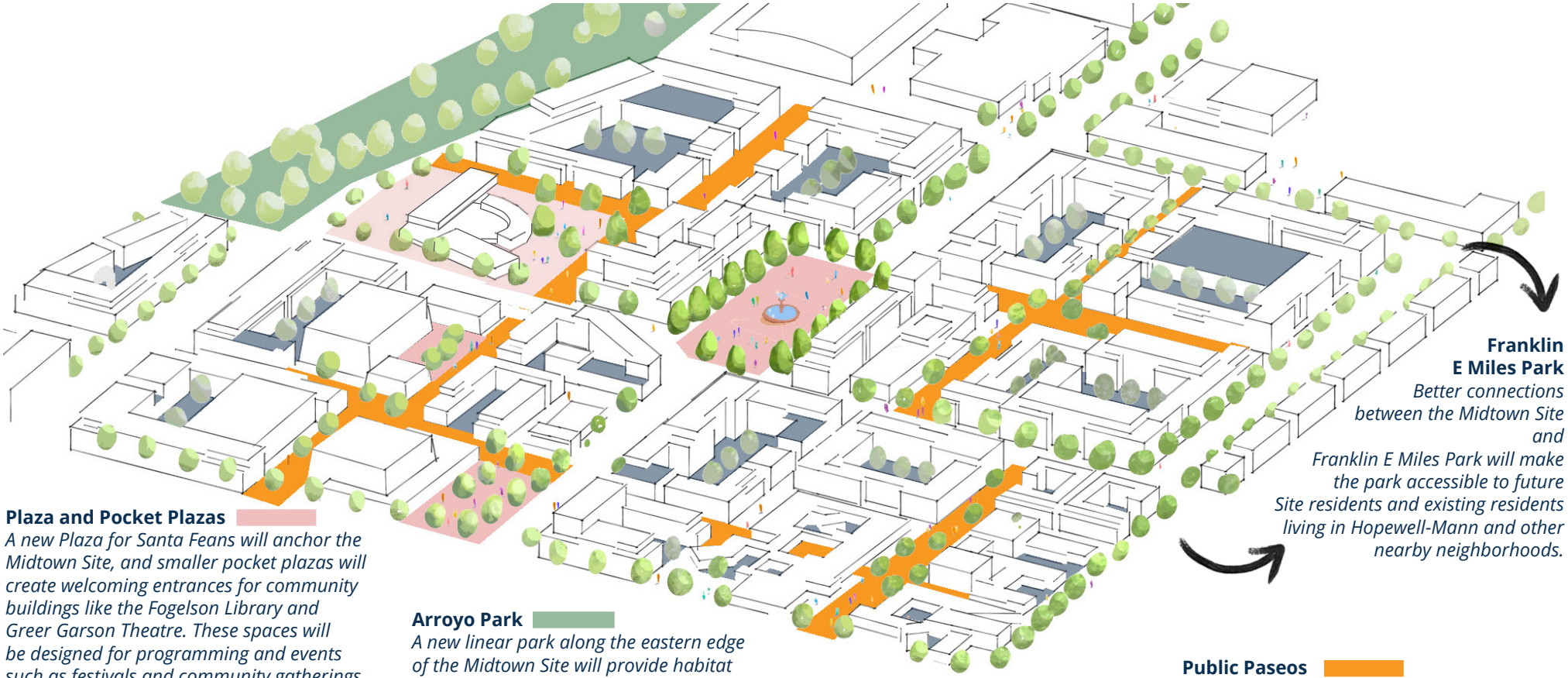

Plaza and Pocket Plazas
A new Plaza for Santa Feans will anchor the Midtown Site, and smaller pocket plazas will create welcoming entrances for community buildings like the Fogelson Library and Greer Garson Theatre. These spaces will be designed for programming and events such as festivals and community gatherings, and will help to promote a lively, dynamic environment at the Midtown Site that reinforces the neighborhoods role as a new center for Santa Fe.

CIVIC AND OPEN SPACE

The Midtown Site will have over 29 acres of open spaces designed to host a variety of activities in diverse outdoor settings designed to respond to the climate and culture of Santa Fe. These public spaces will be designed for hosting a broad range of community festivals and events, such as powwows, and arts, film and music festivals.

Arroyo Park
A new linear park along the eastern edge of the Midtown Site will provide habitat for native species and form an important north-south connection for people walking, rolling, and riding bikes. Green infrastructure will be integrated into open space design to incorporate sustainable stormwater management strategies.

Open Spaces on Development Parcels
New development at the Midtown Site must include outdoor space in the form of courtyards and roof terraces. These spaces will help to provide additional outdoor access for residents and workers at the Site.

Public Paseos
These walkways will connect open spaces and community use buildings around the Midtown Site. In addition to their role as connectors, these spaces can also be used for passive recreation, strolling, and catching up with neighbors on shaded benches.

Franklin E Miles Park
Better connections between the Midtown Site and Franklin E Miles Park will make the park accessible to future Site residents and existing residents living in Hopewell-Mann and other nearby neighborhoods.

gathering + recreation

authentic + appropriate

SENSE OF PLACE

Standards in the Plan require new buildings to reflect the climate, culture and urban form of Santa Fe so the Midtown Site will have an undeniably local sense of place.





Emphasis on the Public Realm
The Master Plan prioritizes a high-quality public realm — the streets, sidewalks, and open spaces that will characterize the experience of being in the Midtown Site.



Sizing Buildings for Santa Fe
Development standards require height stepbacks and establish maximum building dimensions to promote a scale of development that is consistent with Santa Fe's existing urban form while providing substantial opportunities for the construction of new housing and employment spaces at the Site.

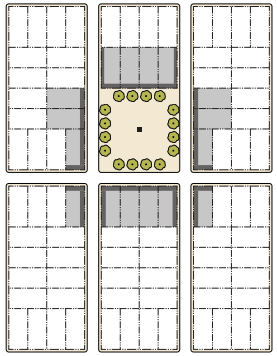

Prioritize Open Spaces
Development standards will require buildings adjacent to open spaces to engage with the space through frontage designs that will help to activate the space and promote a welcoming environment at the Midtown Site.



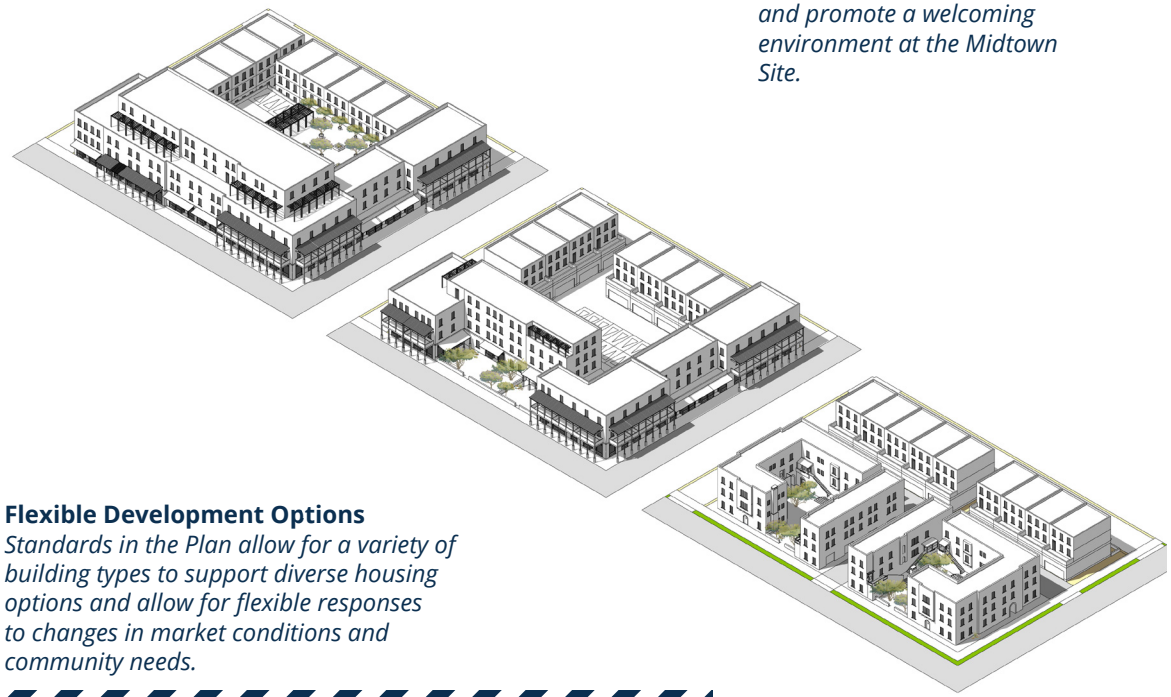

Flexible Development Options
Standards in the Plan allow for a variety of building types to support diverse housing options and allow for flexible responses to changes in market conditions and community needs.



Not "One-Size Fits All"
Vibrant neighborhoods are unique places, with a variety of buildings, uses, and spaces. Standards in the Plan will support a diverse neighborhood at the Midtown Site.

desirable living options

Housing Choices and Affordability

People who call the Midtown Site home will reside in a variety of affordable and market-rate units, in diverse building types that provide options for different unit sizes, prices, and lifestyles.

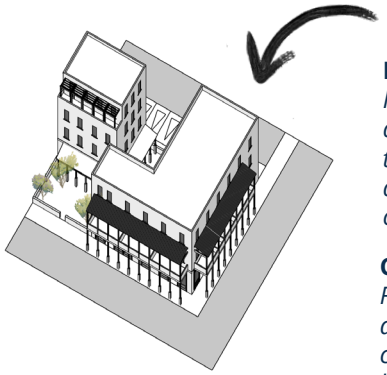

Mixed-Use Buildings
Residences are located above active uses on the ground level such as shops, cafes and community spaces.

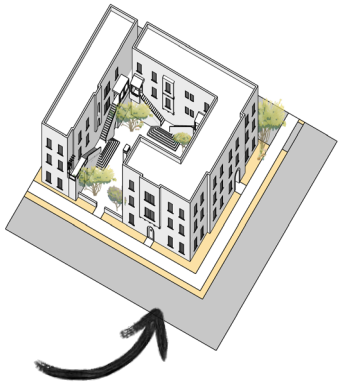

Courtyard Buildings
Residences are oriented around a shared courtyard for use by residents of the buildings.

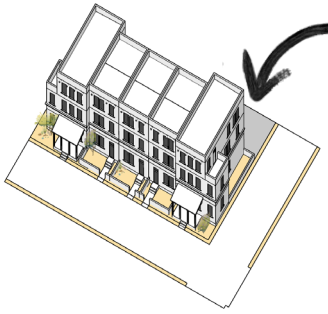

Rowhouse Buildings
Residential units are located side-by-side with small front dooryards and sideyards for corner units.

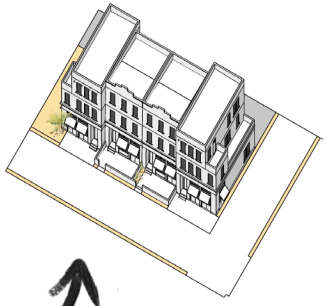

Live/Work Buildings
Flex spaces for small businesses and artist studios are located below a residential unit where the business owner/artist lives.

At least 30% of homes developed at the Midtown Site will be priced affordability for low and moderate-income households. The City will work to ensure that community objectives around affordable housing can be realized and that affordable housing can be sustainable and long-term.

Efforts to ensure affordable housing at the Midtown Site will include:

- Housing projects developed at the Midtown Site will provide affordable housing through the City's Housing Inclusionary Zoning requirements, including the Santa Fe Homes (SFCC 26-1) and Low-Priced Dwelling Unit Programs (26-2).
- In addition the City intends to work with developers at the Midtown Site to create additional opportunities for mixed-use, mixed-income development through:
  - requirements for inclusionary homeownership units with affordability controls or deed restrictions that provide long-term affordability;
  - requirements for affordable rental units, also with deed restrictions or covenants that provide long-term affordability;
  - options for developers to provide cash contributions in lieu of affordable housing units that will generate affordable housing construction within the Midtown Site/ LINC Overlay zoning area - the Midtown District; and
  - incentives to generate diverse tenure models on certain parcels, including shared equity models like community land trusts and co-housing.

Housing at the Midtown Site is expected to include a broad variety of housing types and sizes that help to meet the diverse housing needs of Santa Feans.



Administration Building*



Benildus Hall



Fogelson Library Complex*



Greer Garson Studio Complex*



Greer Garson Theater Center*



Visual Arts Center

** Denotes building designed by local architect Philippe Register, a practitioner of "southwest regional modernism" that is unique to Santa Fe.*



REUSE OF EXISTING BUILDINGS

The buildings indicated on the map will be adaptively reused to honor the history of the Midtown Site while providing venues for cultural uses and amenities.

leveraging our legacy

FROM VISION TO REALITY

The Midtown Master Plan provides a development framework to support future redevelopment activity at the Site. It is the first step in creating a new center for Santa Fe at the Midtown Site.

Elements of Sustainable Development
More than 2,800 people shared their ideas for the Midtown Site as part of the initial outreach process, which concluded in 2018. Based on the input received, four elements were identified to guide development.

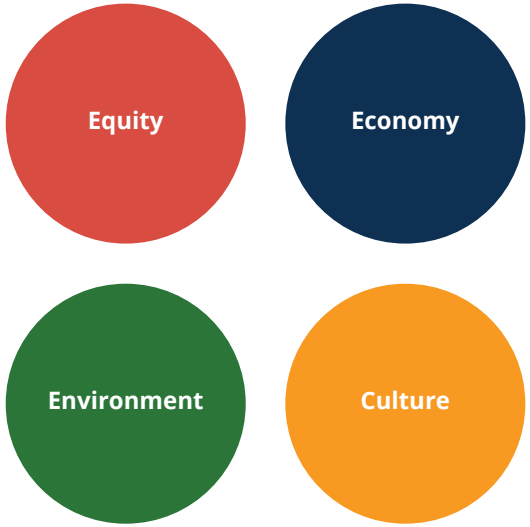

Sustainable Development

The Plan lays the groundwork for a neighborhood that is environmentally, economically, socially and culturally sustainable, reinforcing green design, affordable housing, access to amenities and services, and spaces for cultural activities.

History and Culture

To support cultural uses and historic remembrance, some existing buildings will be reused and civic spaces for cultural uses and gatherings will be provided. Santa Fe's history will be celebrated through place-based design that is responsive to local climate and culture.

Walkable

The Midtown Site will be a place where a person can walk, roll or bike to fulfill daily needs. Transit use will be supported, and while vehicular travel will be accommodated, alternative modes of active transportation will be prioritized.

Housing Choice

The variety of building types enabled by the Plan lays the groundwork for more housing choices for Santa Feans, and provides the opportunity for both affordable and market rate housing at the Midtown Site.

A LOOK AT THE MASTER PLAN DOCUMENT



Chapter 1 Mission + Statement *Provides an overview of the Midtown Master Plan and its relationship to the City's planning framework.*

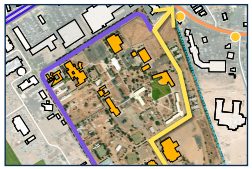

Chapter 2 Background + Setting *Summarizes existing conditions and identifies key characteristics of the Midtown Site and surrounding areas.*



Chapter 3 Vision *Gives an overview of the development vision and phasing, and articulates goals for sustainability, mobility, stormwater, open space and built form.*



Chapter 4 Connectivity + Mobility *Defines and provides the design direction for the future street network, modal prioritization, and parking policies.*

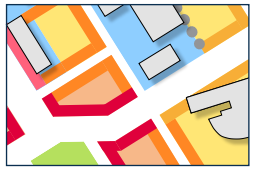

Chapter 5 Development Standards *Establishes form-based development standards that regulate the future built character on the Midtown Site.*

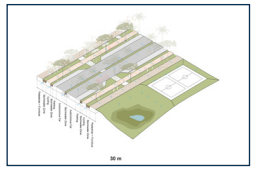

Chapter 6 Infrastructure + Public Facilities *Describes green infrastructure and addresses necessary improvements for infrastructure and utilities.*



Chapter 7 Appendices *Includes supplementary documents developed throughout the Master Plan process.*

Zoning

The Midtown Site is currently zoned as single-family residential (R5). Only five homes per acre can be built in an R5 zone. To foster variety, the Plan proposes changing the zoning to C-2 (General Commercial District) which allows commercial and retail uses to be mixed with residential units and will enable many more homes to be provided at the Midtown Site.

Areas adjacent to the Site are currently zoned C-2. On their own, standards are designed to guide future additions or changes to existing strip commercial developments in the area.

Together with new development standards included in the Plan, this update will ensure that the buildings, streets and public spaces that get built at the Midtown Site are consistent with the community's vision.

Midtown LINC Zoning Area

The Midtown Local Innovation Corridor Overlay District (Midtown LINC Zoning Area) aims to create a vibrant, mixed-use neighborhood within the demographic and geographic center of the city.

Adopted in 2016, it incentivizes multi-family residential development, complementary nonresidential uses, and an enlivened, street-oriented pedestrian environment by freeing development capacity of existing under-developed land and buildings, while allowing existing uses to continue as redevelopment occurs.

The Plan provides guidance for how nearby properties in the LINC can evolve to be complementary with new development on the Midtown Site.

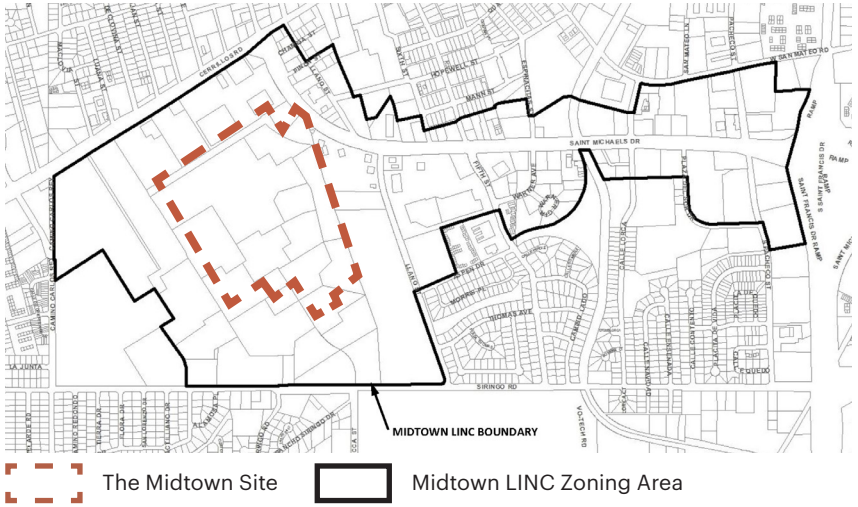

PROCESS

The Midtown Master Plan is the first step in creating a new center for Santa Fe at The Site. The plan enables the following future actions to take place at the Midtown Site:

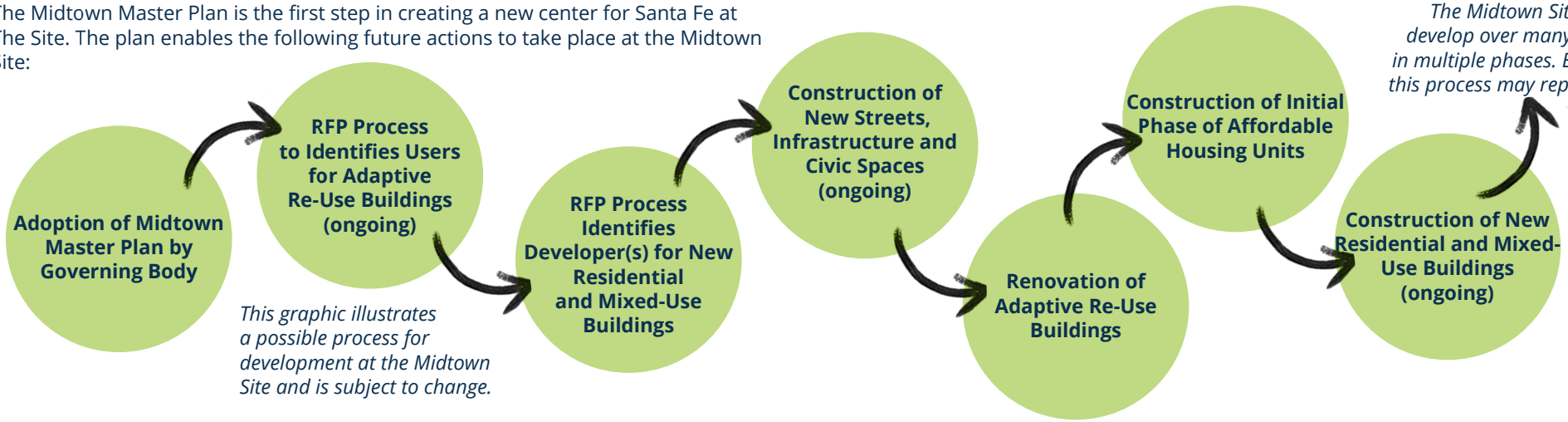

This graphic illustrates a possible process for development at the Midtown Site and is subject to change.

The Midtown Site will likely develop over many years and in multiple phases. Elements of this process may repeat several times.



PREPARED BY:
SANTA FE OFFICE OF COMMUNITY
AND ECONOMIC DEVELOPMENT

planning@santafenm.gov

Learn more and stay up to date by visiting:

MidtownDistrictSantaFe.org

QUALIFICATIONS OF THE APPRAISER

APPRAISER'S QUALIFICATIONS- TIM CONNELLY, MAI

Professional Memberships

- Member of the Appraisal Institute – Designated as an MAI
- The New Mexico Real Estate Appraisers' Board (General Certification #03225-G)

Professional Education

- BS, College of Education, The University of Maryland (1988)
- Masters of Social Work, West Virginia University (1993)

Appraisal Courses and Seminars

- Real Estate Appraisal (1998)
- Applications of Real Estate Appraising (1998)
- National USPAP update (2001, 2006, 2011, 2013, 2015, 2017, 2018, 2020, 2022, 2023)
- Standards and Ethics (1998)
- Introduction to Income and Cost Approach (1998)
- FHA Appraising (1999)
- Appraising Small Commercial Properties (1999)
- Appraising Commercial and Industrial Properties (1999)
- The Narrative Report (1999)
- The Cost Approach (2007)
- Private Appraisal Assignments (2007)
- Appraisal Trends (2007)
- Construction Details and Trends (2007)
- Appraising Factory Built Housing (2007)
- Developing and Growing an Appraisal Practice (2007)
- Understanding Factory Built Housing (2007)
- Information Technology for Real Estate (2007)
- Appraising for the Secondary Market (2007)
- Income Capitalization (2007)
- Fair Housing (2007)
- Disclosures and Disclaimers (2011)
- Legal Descriptions (2011)
- Green Buildings (2011)
- Minimize your Liability (2011)
- Greening the Appraisal and Real Estate Industry (2011)
- Mortgage Fraud (2011)
- Sales Verification (2011)
- Land and Site Valuation (2011)
- REO and Foreclosures (2011)
- Environmental Issues for Appraisers (2011)
- Environmental Contamination of Income Properties (2011)
- General Appraiser Site Valuation & Cost Approach (2011)
- General Appraiser Sales Comparison Approach (2011)
- Statistics and Modeling (2011)
- General Appraiser Income Approach (2011)
- Expert Witness (2011)
- General Appraiser Market Analysis (2011)
- Advanced Market Analysis (2012)
- Advanced Income Capitalization (2012)
- Advanced Concepts and Case Studies (2012)
- Quantitative Analysis (2012)
- Business Practice and Ethics (2012)
- General Appraiser Report Writing (2013)
- Condemnation Appraising: Principles & Applications (2016)
- Valuation of Conservation Easements (2017)
- Regional Economic Forecast (2019)
- Residential Construction (2023)
- Fundamentals of Appraising Luxury Homes (2023)

Professional Experience

01/18 – Present:	Hippauf Dry & Connelly: CMO
05/11 – 12/17:	Hippauf and Associates, Inc., Appraiser
02/08- 02/11:	Westholm and Associates, Assistant Appraiser
03/05- Present	Self- employed, Conservation Consulting
03/00- 02/05	The Conservation Fund, Maryland Representative
01/98- 02/01	Mid-Shore Appraisal Service, Associate Appraiser

Clients

Clients include local and national lenders, attorneys, institutions, including state and local governmental entities, Non-government organizations and individuals.

Classes of Properties Appraised

Commercial, existing and proposed, such as offices, retail light industrial, self-storage, subdivisions, vacant land, special use properties, farm and ranch. Conservation easements.


State of New Mexico

NMRLD
NEW MEXICO REGULATION & LICENSING DEPARTMENT

Real Estate Appraisers Board

HEREBY CERTIFIES THAT

Tim Connelly

HAVING GIVEN SATISFACTORY EVIDENCE OF THE COMPLETION OF PROFESSIONAL AND OTHER REQUIREMENTS PRESCRIBED BY LAW IS GRANTED A LICENSE TO PRACTICE IN THE STATE OF NEW MEXICO

General Certified Appraiser

License No. 03225-G Issued 10/5/2011 Expires 4/30/2025

THIS LICENSE SHOULD BE CONSPICUOUSLY POSTED IN PLACE OF BUSINESS OR AS REQUIRED BY LAW

CITY OF SANTA FE

Memorandum

Date: June 12, 2024

To: Governing Body, Quality of Life Committee, Public Works and Utilities Committee

From: Geronimo Griego, City of Santa Fe Fire Marshal

Via: Brian Moya, City of Santa Fe Fire Chief BJM

RE: Changing Fireworks Display Requirements

EXECUTIVE SUMMARY:

State statute, NMSA 1978, Section 60-2C-9, requires that the Governing Body approve permits for public displays of fireworks. The proposed bill amends Section 12-3 of SFCC 1987, pertaining to the public display of fireworks. If approved, the bill would specify that legislation is not needed to approve permits for public firework displays and identifies the International Fire Code as the standard for the permitting of public displays of fireworks. The bill also requires operators to be certified and duly approved by the fire department.

ATTACHMENTS:

Resolution
Fiscal Impact Report

CITY OF SANTA FE, NEW MEXICO

BILL NO. 2024-12

INTRODUCED BY:

Councilor Signe Lindell

A BILL

AMENDING SFCC 1987, SECTION 12-3, PERTAINING TO THE PUBLIC DISPLAY OF FIREWORKS; RECOGNIZING THE FIRE DEPARTMENT WILL APPLY THE INTERNATIONAL FIRE CODE TO THE PUBLIC DISPLAY OF FIREWORKS; MAKING OTHER TERMS CONSISTENT WITH THE INTERNATIONAL FIRE CODE; AND PROVIDING FOR GOVERNING BODY APPROVAL OF PUBLIC FIREWORKS DISPLAY PERMITS WITHOUT LEGISLATION.

BE IT ORDAINED BY THE GOVERNING BODY OF THE CITY OF SANTA FE:

Section 1. Section 12-3.1 through 12-3.2 of SFCC 1987 (being SFCC § 7-4-1) is included for reference without amendments:

12-3 - FIREWORKS.

12-3.1 - Definitions.

A. As used in this section:

Dangerous fireworks means any firecracker, roman candle, skyrocket, torpedo, bomb, blank cartridge, cone-shape fountain, bottle rocket and flyer or any other type or form of explosive; any item that is self-propelling or the effect of which extends above fifteen feet (15') in height from the

underscored material = new [~~bracketed material~~] = delete

ground; or any article which produces a report by combustion, explosion or detonation.

Safe and sane fireworks means all fireworks that have no report, that are not self-propelling and the effect of which does not extend above fifteen feet (15') in height from the ground, including the following:

(1) Snakes, total pyrotechnic composition not to exceed twenty (20) grams each in weight;

(2) Smoke devices and spray balls, total pyrotechnic composition not to exceed twenty-five (25) grams each in weight;

(3) Wheels, total pyrotechnic composition not to exceed sixty (60) grams in weight per driver unit, but any number of drivers may be on any one wheel. The inside bore of driver tubes shall not be over one-half inch (1/2");

(4) Illuminating torches and colored fire in any form, total pyrotechnic composition of illuminating torches not to exceed one hundred (100) grams each in weight;

(5) Sparklers and dipped sticks, total pyrotechnic composition not to exceed one hundred (100) grams in weight. Pyrotechnic composition containing any chlorate or perchlorate shall not exceed five (5) grams;

(6) Cylindrical fountains, total pyrotechnic composition not to exceed seventy-five (75) grams each in weight. The inside tube diameter shall not exceed three-fourths inch (¾");

(7) Railway fuses, fuses, truck flares, hardship distress signals, smoke candles, smoke signals and smoke pots; and

(8) All other fireworks similar to the above, provided they are tested and approved by the chief of the fire department.

B. The terms "safe and sane fireworks" and "dangerous fireworks" do not include auto flares,

toy pistols, toy guns or devices in which paper caps containing twenty-five hundredth (25/100) gains or less of explosive compounds are used, the sale and use of which shall be permitted at all times.

State Law reference— Authorizing city to regulate and prohibit the use of fireworks, § 3-1811 NMSA 1978.

12-3.2 - Manufacture, sale and discharge of fireworks.

Except as hereinafter provided it shall be unlawful to manufacture, sell, offer to sell, own, possess or discharge any fireworks within the city.

Section 2. Section 12-3.3 of SFCC 1987 (being SFCC 1981, § 7-4-3) is amended to read:

12-3.3 - Public display.

A. The fire department shall apply the terms of the most recently adopted version of the IFC, as specified in 12-1.2, and may adopt additional reasonable rules and regulations for the granting of permits for supervised and controlled public displays of fireworks by the city, a civic organization, amusement park or other organization or group of individuals approved by the fire department. Such permits shall be granted on application to the fire department and upon recommendation for approval by the fire chief or chief's designee and governing body [,] approval.[~~, by the governing body, and the filing of a bond by the applicant as herein provided.~~] Permit approval does not require legislation.

B. Every such display shall be handled by a certified, competent operator duly approved by the fire department and shall be of such composition, character, and so located, discharged or fired, as, in the opinion of the department, not to be hazardous to property or endanger life.

[~~B~~]C. Application for permits shall be made in writing at least thirty (30) days in advance of the date of the display. After the permit has been granted, the sale, possession, use and

distribution of fireworks for such display shall be lawful for that purpose only. No such permit granted shall be transferable.

[~~C. Applicants for permits shall furnish a bond of not less than one thousand dollars ($1,000) conditioned on compliance with this section and the rules and regulations of the fire department. The bond shall be approved by the city attorney. The city shall not be required to file a bond.~~]

D. Before any permit for fireworks display shall be issued, the applicant shall furnish proof of financial responsibility to satisfy any claims for damages to property or personal injuries arising out of any act or omission on the part of the applicant or any agent or employee in such amount, character and form as the city attorney determines necessary for the protection of the public.

E. The certified operator shall dispose of any fireworks that remain unfired after an approved display is concluded, as soon as possible after the display, in a manner safe for the particular type of fireworks and approved by the fire department.

Section 4. Section 12-3.4 (being SFCC 1981, § 7-4-4) is amended to read:

12-3.4 - Other permitted activities.

A. Any person may sell, offer to sell, or store for sale safe and sane fireworks by obtaining a permit as provided in subsection 12-3.5 of this Chapter.

B. Wholesalers and jobbers may sell dangerous fireworks; provided, that they are shipped out-of-state in accordance with the interstate commerce commission and department of transportation regulations covering the transportation of explosives and other dangerous articles by motor, rail and water. Wholesalers and jobbers shall store their supplies of fireworks in accordance with [~~Section 12.6 of the Fire Prevention Code adopted by Section 122 of this Chapter~~] the terms of the most recently adopted version of the IFC, as specified in 12-1.2. Wholesalers and jobbers selling dangerous fireworks shall obtain a permit from

the fire department and pay an annual fee of five hundred dollars ($500) to the city treasurer.

C. This section does not prohibit the use of fireworks by railroads or other transportation agencies for signal purposes or illumination, the sale or use of blank cartridges for a show or theater, for signal purposes in athletics or sports or for use by military organizations.

Section 5. Section 12-3.5 through 12-3.8 (being SFCC 1981, § 7-4-4) are included for reference without amendments:

12-3.5 - Permit for sale or possession of fireworks.

A. Any person intending to sell, offer to sell or store for sale any safe and sane fireworks shall first obtain a permit by:

(1) Filing a written application on a form approved by the fire department which shall include the name and address of the wholesaler or jobber selling the fireworks and by paying a fee to the city treasurer in the following amounts:

(a) Wholesalers, one hundred dollars ($100.00); and

(b) Retailers, fifty dollars ($50.00);

(2) Demonstrating to the satisfaction of the fire department that the items to be handled under the permit comply with the terms and intent of this section; and

(3) Certifying that no person under the age of sixteen (16) years shall be permitted by the applicant to sell or offer to sell any fireworks.

B. Any permit granted under this subsection to any person, wholesaler or jobber shall be for a period of one (1) year.

C. Any permit granted under this subsection to any person other than a wholesaler or jobber shall authorize the possession of safe and sane fireworks for the period of June 10 through July 15 of each year and the sale and display of such fireworks for the period of June 20 through July 5 of each year.

D. Any permit granted hereunder shall be valid only for the calendar in which issued and only for the premises or location for which issued. No permit shall be transferable, assignable or automatically renewable.

12-3.6 - Sale, possession or use restricted to certain persons.

A. It is unlawful to sell, offer to sell or give any fireworks to any person under sixteen (16) years unless they are accompanied by a parent or guardian.

B. Persons over the age of sixteen (16) years may purchase, use and possess safe and sane fireworks.

12-3.7 - Restrictions.

A. No fireworks approved for sale shall be stored, possessed or used within fifty feet (50') of gasoline or other flammable liquids unless such liquids are sealed in metal containers of not more than one (1) gallon capacity.

B. No fireworks shall be sold except from within a permanent structure at a recognized business location. The construction or use of fireworks stands outside of a permanent structure is prohibited.

12-3.8 - Seizure of fireworks.

The fire department shall seize, take, remove or cause to be removed at the expense of the owner all stocks of dangerous fireworks offered or exposed for sale, stored or held in violation of this section.

Section 5. Section 12-3.9 (being SFCC 1981, § 7-4-4) is amended to read:

12-3.9 Restrictions on the sale and use of fireworks.

A. The sale and use of the following fireworks are prohibited during extreme or severe drought conditions, based on current drought indices published by the national weather service:

(1) Aerial devices, such as

a) Ariel shell kit-reloadable tubes;

b) Aerial spinners;

c) Helicopters;

d) Mines;

e) Missile-type rockets;

f) Multiple tube devices;

g) Roman candles;

h) Shells; and

i) Stick-type rockets.

(2) Ground audible devices, such as

a) Chasers; and

b) Firecrackers.

B. The use of all fireworks is prohibited within any lands covered wholly or in part by timber, brush, or native grass.

C. The above restrictions do not apply to public displays of fireworks in strict conformance with the requirements and conditions set forth in subsection 12-3.3 SFCC 1987 and as approved by the city of Santa Fe fire chief or the fire chief's designee.

D. The governing body may implement additional restrictions during severe or greater drought conditions pursuant to Section 60-2C-8.1 NMSA 1978.

E. Penalties.

(1) Any individual, firm, partnership, or other entity found in violation of this section shall be deemed guilty of a misdemeanor and shall be punished by imprisonment for up to ninety (90) days or a fine not to exceed five hundred dollars ($500.00), or both.

(2) Each and every occasion on which this section is violated shall be considered a separate offense.

PASSED, APPROVED, and ADOPTED this _____day of _____, 2024.

APPROVED AS TO FORM:

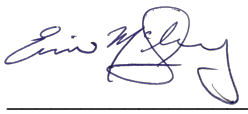

_____

ERIN K. McSHERRY, CITY ATTORNEY

Legislation/2024/Bills/Changing Fireworks Display Requirements

FIR No. 10604

FISCAL IMPACT REPORT

General Information:

(Check) **Bill:** X **Resolution:** _____

Short Title(s): Changing Fireworks Display Requirements

Sponsor(s): Councilor Signe Lindell

Reviewing Department(s): City of Santa Fe Fire Department and Fire Marshall

Staff Completing FIR: Geronimo Griego; City Fire Marshall

Date: 6/12/2024 **Phone:** (505)-955-6518

Reviewed by City Attorney: _____ **Date:** Oct 24, 2024

Reviewed by Finance Director: Emily K. Oster **Date:** Oct 25, 2024

Summary:
The proposed bill amends Section 12-3 of SFCC 1987, pertaining to the public display of fireworks. If approved, the bill would eliminate the requirement of a resolution, allowing for permit approval for public display of fireworks after the City's Fire Chief recommends approval. The bill is consistent with the most recently adopted International Fire Code.

Departments Affected:
Community Health and Safety Department (Santa Fe Fire Department).

Consequences of Not Enacting Legislation:
If this legislation is not adopted, then Section 12-3 of SFCC 1987 will continue to conflict with the International Fire Code. In addition, the Governing Body would also still be required to pass a resolution relating to the public display of fireworks.

Conflict, Duplication, Companionship, or Relationship to Other Legislation:
None.

Performance and Administrative Implications:
The Bill clarifies removes requirements that previously were stated differently in the IFC and code and makes Governing Body approval of permits for public display easier by no longer requiring a resolution.

Fiscal Implications:
None.

Fiscal Impact

_____X_____ Check here if no fiscal impact

Expenditures

Expenditure Type	FYE __	FYE __	FYE __	Require BAR (Y/N)	Recurring (R) or Non-recurring (NR)	Fund	3-Year Total Cost
Personnel and Benefits*	$	$	$				
Capital Outlay	$	$	$				
Contractual/ Professional Services	$	$	$				
Operating	$	$	$				$
Total:	$	$	$				$

* This includes all staff time associated with executing the job functions of the proposed legislation.

Expenditure Narrative:

Revenue

Revenue Type	FYE __	FYE __	FYE __	Recurring (R) or Non-recurring (NR)	Fund
General Fund	$	$	$		
Special Revenue	$	$	$		
CIP	$	$	$		
Enterprise	$	$	$		
Internal Service	$	$	$		
Trust and Agency	$	$	$		
Federal	$	$	$		
Other	$	$	$		
Total	$	$	$		

Revenue Narrative:

Signature: Brian J Moya
Brian J Moya (Oct 25, 2024 11:44 MDT)

Email: bjmoya@santafenm.gov

Signature:

Email: gggriego@santafenm.gov