Agenda **Regular Meeting of the Finance Committee**
November 12, 2024 at 5:00 PM
Council Chambers, City Hall
200 Lincoln Avenue

Procedures for Finance Committee Meeting

Viewing: Members of the public may view the meeting through the Government Channel on Comcast Channel 28 and Comcast HD928 or may stream the meeting live on the City of Santa Fe's YouTube channel. The YouTube livestream can be accessed from most smartphones, tablets, or computers.

1. Call to Order
2. Roll Call
3. Approval of Agenda
4. Approval of Consent Agenda
5. Presentations
   a. General Obligation Bond Issuance Process. (Emily K. Oster, Finance Director; ekoster@santafenm.gov; George Williford, Hilltop Securities; george.williford@hilltopsecurities.com; Peter Franklin, Modrall Sperling; pfranklin@modrall.com) - ,
   b. City of Santa Fe Revenue Fiscal Year 2024 Review. (Alexis C. Lotero, Assistant Finance Director; aclotero@santafenm.gov) - ,
6. Action Items: Consent Agenda
   a. Request for Approval of October 28, 2024 Finance Committee Meeting Minutes. (Emily K. Oster, Finance Director; ekoster@santafenm.gov)

      Committee Review:
      Finance Committee: 11/12/2024 - ekoster@santafenm.gov

      Committee Review:

   b. Request for Approval of the 2025 Council Committee and Governing Body Meeting Calendar. (Xavier Vigil, Committee and Contracts Coordinator; xivigil@santafenm.gov)

      Committee Review:

Public Works and Utilities Committee: 11/04/2024
Quality of Life Committee: 11/06/2024
Finance Committee: 11/12/2024
Governing Body: 11/13/2024 -

Committee Review:

c. Request for Approval of the 2022 FEMA Building Resilient Infrastructure in Communities Sub-award Grant Agreement EMT-2022-BR-001 in the Total Amount of $524,999 from the New Mexico Department of Homeland Security and Emergency Management for the Design of Microgrids for Community Resiliency. (Brian Williams, Office of Emergency Management Director; bgwilliams@santafenm.gov and Regina Wheeler, Public Works Director; rawheeler@santafenm.gov)

1. Request for Approval of a Budget Amendment Resolution (BAR) in the Total Amount of $524,999 to Fund FY25 Expenditures, Grant Revenue, and Required Local Match for the Sub-Recipient Grant Award from FEMA.

Committee Review:
Public Works and Utilities Committee: 11/4/2024
Finance Committee: 11/12/2024
Governing Body: 11/13/2024

- bgwilliams@santafenm.gov, rawheeler@santafenm.gov

Committee Review:
Committee Review:
Public Works and Utilities Committee: 11/4/2024
Finance Committee: 11/12/2024
Governing Body: 11/13/2024

d. Request for Approval of the 2022 FEMA Building Resilient Infrastructure in Communities Sub-Grant Agreement EMT-2022-BR-0002 in the Total Amount of $709,122.47 with the New Mexico Department of Homeland Security and Emergency Management to Design Flood Mitigation Solution at Ashbaugh Park. (Brian Williams, Director Office of Emergency Management; bgwilliams@santafenm.gov)

1. Request for Approval of a Budget Amendment Resolution (BAR) to Budget $506,576.60 in Awarded Grant Funds into Storm Water WIP Design, $168,858.87 in Matching Funds from the Storm Water Utility Service Fee to Storm Water WIP Design, and $33,687 in Grant Funds for Subrecipient Management Costs into Emergency Management Professional Contracts.

Committee Review:
Public Works and Utilities Committee: 11/04/2024
Finance Committee: 11/12/2024
Governing Body: 11/13/2024 -

Committee Review:

e. Request for Approval of the 2023 Hazard Mitigation Grant Program Sub-Grant Agreement DR-5430-0012-NM in the Total Amount of $364,820.91 with New Mexico Department of

Homeland Security and Emergency Management for Storm Water Projects. (Brian Williams, Director Office of Emergency Management; bgwilliams@santafenm.gov)

1. Request for Approval of a FY25 Budget Amendment Resolution (BAR) to Budget $350,961.66 in Awarded Federal Grant Funds to Stormwater WIP Design, $13,859.25 in Awarded Federal Grant Funds for Subrecipient Management Costs into Emergency Management Professional Contracts, and $87,740.41 in Awarded State Grant Funds to Stormwater WIP Design.

Committee Review:
Public Works and Utilities Committee: 11/04/2024
Finance Committee: 11/12/2024
Governing Body: 11/13/2024 -

Committee Review:

f. Request for Approval of the 2023 Hazard Mitigation Grant Program Sub-Grant Agreement DR-4652-0011-NM in the Total Amount of $163,509.97 with New Mexico Department of Homeland Security and Emergency Management for Updating the City of Santa Fe Hazard Mitigation Plan and Development of a Wildfire Risk Assessment. (Brian Williams, Director Office of Emergency Management; bgwilliams@santafenm.gov)

1. Request for Approval of a Budget Amendment Resolution (BAR) in the Total Amount of $163,509.97 to Budget Awarded Grant Funds to the Office of Emergency Management Professional Contracts.

Committee Review:
Public Works and Utilities Committee: 11/04/2024
Finance Committee: 11/12/2024
Governing Body: 11/13/2024 -

Committee Review:

g. Request for Approval of a Budget Amendment Resolution (BAR) to Re-Appropriate Unspent FY24 Budget in the Amount of $175,000 into Professional Services to Engage a Consultant to Compile the Public Infrastructure Development Standards for Chapter 14 Code Revisions. (Jeanne Wolfenbarger P.E., Public Works Complete Streets Engineer, jawolfenbarger@santafenm.gov)

Committee Review:
Public Works and Utilities Committee: 11/04/2024
Finance Committee: 11/12/2024
Governing Body: 11/13/2024 -

Committee Review:

h. Request for Approval of Addendum A to Professional Services Agreement Item #23-0595 with Denovo to Increase the Compensation for Cloud Storage and Maintenance of the City of Santa Fe AS400 data by $1,819,244 for a New Total Amount of $3,196,884.77 and to Extend the Termination Date to June 30, 2027. (Eric Candelaria, ITT Department Director, edcandelaria@santafenm.gov and Larry Worstell, Infrastructure Manager, lfworstell@santafenm.gov)

Committee Review:
Quality of Life Committee: 11/06/2024
Finance Committee: 11/12/2024
Governing Body: 11/13/2024 -

Committee Review:

i. Request for Approval of a New Mexico Department of Finance and Administration General Fund 93100 Capital Appropriation Project Grant 24-I3147 in the Amount of $240,000 to Replace the Santa Fe River Pedestrian Bridge at Shelby Street with a Reversion Date of June 30, 2028. (Scott A. Overlie, Parks and Open Space Project Administrator; saoverlie@santafenm.gov)

1. Request for Approval of a Budget Amendment Resolution (BAR) to Allocate the DFA Funding in the Amount of $240,000 into FY25 Revenue and Parks and Trails CIP WIP Construction.

Committee Review:
Public Works and Utilities Committee: 11/04/2024
Finance Committee: 11/12/2024
Governing Body: 11/13/2024 -

Committee Review:

j. Request for Approval of a New Mexico Department of Finance and Administration General Fund 93100 Capital Appropriation Project Grant 24-I3142 in the Amount of $5,000,000 for Improvements at Fort Marcy Park with a Reversion Date of June 30, 2028. (Scott A. Overlie, Parks and Open Space Project Administrator; saoverlie@santafenm.gov)

1. Request for Approval of a Budget Amendment Resolution (BAR) to Allocate the DFA Funding in the Amount of $5,000,000 into FY25 Parks and Trails CIP Revenue and WIP Construction.

Committee Review:
Public Works and Utilities Committee: 11/04/2024
Finance Committee: 11/12/2024
Governing Body: 11/13/2024 -

Committee Review:

k. Request for Approval of Amendment No. 1 to Capital Improvement Program Agreement Item #21-0660 with Sub Surface Contracting Inc. to Increase Compensation by $1,500,000 for a New Total Contract Amount of $2,463,475.12 for On-Call Repair, Replacements, Extention, and Rehabilitation of Sewer Collection Systems. (P. Fred Heerbrandt P.E., Engineer Supervisor, pfheerbrandt@santafenm.gov)

1. Request for Approval of a Budget Amendment Resolution (BAR) in the Total Amount of $1,500,000 from the Wastewater Cash Fund to Repair and Maintenance System Equipment and WIP Construction.

Committee Review:

Public Works & Utilities Committee: 11/04/2024
Finance Committee: 11/12/2024
Governing Body: 11/13/2024

-

Committee Review:

l. Request for Approval of Amendment No.1 to Item #23-0578 With Intera Inc. to Increase the Compensation by $229,132.72 for a New Total Contract Amount of $528,621.73 to Provide Regulatory Groundwater Monitoring, Soil Vapor Monitoring and Other Environmental and Engineering Services for Frank Ortiz Park Landfill. (Sandra Gabaldon, Environmental Compliance Specialst, sgabaldon@santafenm.gov)

1. Request for Approval of a Budget Amendment Resolution (BAR) in the Total Amount of $229,132.72 from the Environmental Services Enterprise Fund to Professional Contracts.

Committee Review:
Public Works and Utilities Committee: 11/04/2024
Finance Committee: 11/12/2024
Governing Body: 11/13/2024 -

Committee Review:

m. Request for Approval of Amendment No. 2 to Priority Line Replacement Price Agreement Item #23-0183 with A.A.C. Construction LLC to Increase Compensation by $1,581,875 for a New Total Amount of $5,041,875.30 Including NMGRT for On-Call Water Line Replacement. (Bill Huey, Engineer; bchuey@santafenm.gov)

1. Request for Approval of a Budget Amendment Resolution (BAR) in the Total Amount of $1,581,875 from the Water Cash Fund to the Water Capital Projects, WIP Construction.

Committee Review:
Public Works and Utilities Committee: 11/04/2024
Finance Committee: 11/12/2024
Governing Body: 11/13/2024 -

Committee Review:

n. Request for Approval of Amendment No. 2 to Priority Line Replacement Price Agreement Item # 21-0484 with Sub Surface Contracting, Inc. (Sub Surface) to Increase Maximum Compensation by $1,656,807 for a New Total Contract Amount of $6,696,807 Including NMGRT. (Bill Huey, Engineer, bchuey@santafenm.gov)

1. Request for Approval of a Budget Amendment Resolution (BAR) in the Total Amount of $1,656,807 from the Water Cash Fund to Water Capital Project, WIP Construction.

Committee Review:
Public Works and Utilities Committee: 11/04/2024
Finance Committee: 11/12/2024
Governing Body: 11/13/2024 -

Committee Review:

o. Request for Approval of Amendment No. 2 to Price Agreement Item #21-0378 with Sub Surface Contracting, Inc. to Increase Maximum Compensation by $542,187.50 for a New Total Contract Amount of $1,626,562.50 to include New Mexico Gross Receipts Tax (NMGRT) to Provide Construction Services for City Wide Construction and Repair for the City of Santa Fe (Bill Huey, Engineer, bchuey@santafenm.gov)

1. Request for Approval of a Budget Amendment Resolution (BAR) in the Total Amount of $542,188 from the Water Cash Fund to Water Capital Projects, WIP Construction.

Committee Reivew:
Public Works and Utilities Committee: 11/4/2024
Finance Committee: 11/12/2024
Governing Body: 11/13/2024 -

Committee Review:

p. Request for Approval of the First Amendment to the Agreement for Conversion of Streetlights Owned by the Public Service Company of New Mexico (PNM) Item #24-0120 with PNM to Increase the Compensation by $480,000 for a New Not to Exceed Amount of $1,050,000 Including NMGRT and to Extend the Term for One Year to Complete the Conversion of Streetlights to LEDs. (Mike Dalmolin, PE, Traffic Operations Engineering Supervisor; mrdalmolin@santafenm.gov)

Committee Review:
Finance Committee: 11/12/2024
Governing Body: 11/13/2024 -

Committee Review:

q. Request for Approval of a Construction Contract with SKE Contractors, LLC for the Rehabilitation of 10,500 Feet of Vitrified Clay Sewer Pipe in the Total Amount of $3,275,028.20 for a Two-Year Term. (P. Fred Heerbrandt, P.E., pfheerbrandt@santafenm.gov)

1. Request for Approval of a Budget Amendment Resolution (BAR) in the Total Amount of $3,275,029 From the WWMD Enterprise Fund to WIP Construction.

Committee Review:
Public Works & Utility Committee: 11/04/2024
Finance Committee: 11/12/2024
Governing Body: 11/13/2024 -

Committee Review:

r. Request for Approval of Amendment No. 1 to General Service Contract Item #21-0660 with TLC Plumbing to Increase Compensation by $116,000 for a New Total Amount Not to Exceed $657,613.77 for On-Call Repairs and Rehabilitation of the Sewer Collection System. (P. Fred Heerbrandt, P.E., pfheerbrandt@santafenm.gov).

1. Request for Approval of a Budget Amendment Resolution (BAR) in the Total Amount of $116,000 from the Wastewater Management Enterprise Fund into FY25 Repair and Maintenance.

Committee Review:
Public Works and Utilities Committee: 10/21/2024
Finance Committee: 11/12/2024
Governing Body: 11/13/2024 -

Committee Review:

s. Request for Approval of Contract Amendment No. 1 with the Life Link Item# 23-0700 of Recovery Funds Subrecipient Contract Increasing the Total Amount to $1,600,000 for Professional Services and Extend the Term to June 30, 2026. (Youth and Family Services Division Director; Julie Sanchez, jjsanchez@santafenm.gov, Youth and Family Services Program Manager; Kristen Woods, krwoods@santafenm.gov)

Committee Review:
Finance Committee: 11/12/2024
Governing Body: 11/13/2024 -

Committee Review:

t. Request for Approval of Amendment No. 3 to the Intergovernmental Services Agreement with North Central New Mexico Economic Development District for Fiscal Agent Services Item #23-0688 to Add 2024 Capital Appropriations to the Agreement. (Regina Wheeler, Public Works Director; rawheeler@santafenm.gov)

Committee Review:
Finance Committee: 11/12/2024
Governing Body: 11/13/2024 -

Committee Review:

u. Request for Approval of an Addendum to a Customer Order with Lumen Technology Government Solutions, Inc. for City Data Networks and Internet Services Fiber Network In the Total Amount of $343,760 Excluding NMGRT for a Term of 36 Months. (Larry Worstell, ITT Infrastructure Manager, lfworstell@santafenm.gov)

Committee Review:
Finance Committee: 11/12/2024
Governing Body: 11/13/2024 -

Committee Review:

v. CONSIDERATION OF RESOLUTION NO. 2024-_____. (Councilor Michael Garcia)

A Resolution Accepting a Grant from the Transportation Project Fund Program Administered by New Mexico Department of Transportation and Entering into Grant Agreement Control Number HW2LP50060. (Romella Glorioso-Moss, Public Works Project Administrator; rsglorioso-moss@santafenm.gov)

Committee Review:
Public Works and Utilities Committee (Introduced): 11/04/2024
Finance Committee: 11/12/2024
Governing Body: 11/13/2024 -

Committee Review:

7. Action Items: Discussion Agenda

8. Introduction of Legilsation

   a. CONSIDERATION OF RESOLUTION NO. 2024-____. (Mayor Alan Webber) Establishing the City of Santa Fe's Priorities for Consideration by the New Mexico State Legislature During the 57th Legislature- State of New Mexico – First Session, 2025. (Regina Wheeler, Public Works Director; rawheeler@santafenm.gov, Marci Eannarino, Legislation and Policy Innovation Manager; maeannarino@santafenm.gov, Christine M. Spiers, Legislative Assistant; cmspiers@santafenm.gov)

   Committee Review:
   Finance Committee (Introduced): 11/12/2024
   Governing Body: 11/13/2024

   -

   Committee Review:

9. Matters from Staff

10. Matters from the Committee

11. Matters from the Chair

12. Next Meeting: _____

13. Adjourn

Persons with disabilities in need of accommodations, contact the City Clerk's office at 955-6521, five (5) working days prior to meeting date.

City of Santa Fe
General Obligation Bond Issuance Process

HilltopSecurities
A Hilltop Holdings Company

General Obligation Bonds

The General Obligation (GO) Bond issue is proposed to be sold through competitive bid on approximately March 26, 2025.

In that case, proceeds would be received by mid April.

Sale is conducted after distribution of an offering document, Official Statement, containing information on the issue, the City, and the ratings. Also, a Notice of Sale, containing instructions for bids, will be distributed.

Member FINRA/SIPC/NYSE
© 2024 Hilltop Securities Inc.

Key Dates in Issuance Process

City of Santa Fe

$25,000,000

General Obligation Improvement Bonds, Series 2025

January 2025

S	M	T	W	T	F	S
			1	2	3	4
5	6	7	8	9	10	11
12	13	14	15	16	17	18
19	20	21	22	23	24	25
26	27	28	29	30	31	

February 2025

S	M	T	W	T	F	S
						1
2	3	4	5	6	7	8
9	10	11	12	13	14	15
16	17	18	19	20	21	22
23	24	25	26	27	28	

March 2025

S	M	T	W	T	F	S
						1
2	3	4	5	6	7	8
9	10	11	12	13	14	15
16	17	18	19	20	21	22
23	24	25	26	27	28	29
30	31					

April 2025

S	M	T	W	T	F	S
		1	2	3	4	5
6	7	8	9	10	11	12
13	14	15	16	17	18	19
20	21	22	23	24	25	26
27	28	29	30			

Key Events in Issuance Process

(2025 City Council meeting dates are subject to confirmation)

Date	Event
Wednesday, January 15	Introduction of Bond Parameters Ordinance; approval of distribution to Public Works & Utilities Committee and Finance Committee
Monday, February 3	Public Works and Utilities Committee considers draft Bond Parameters Ordinance
Monday, February 10	Finance Committee considers draft Bond Parameters Ordinance
Wednesday, February 26	Public hearing and adoption of Bond Parameters Ordinance
Thursday, February 27	Preliminary Official Statement and information provided to rating agencies
Week of March 3 - 7	Discussions with rating agencies
Friday, March 14	Ratings received
Monday, March 17	Preliminary Official Statement posted on EMMA and Notice of Competitive Sale distributed
Wednesday, March 26	Competitive Sale of Bonds; City Finance Director executes Pricing Certificate
Wednesday, April 16	Closing and receipt of proceeds

Member FINRA/SIPC/NYSE
© 2024 Hilltop Securities Inc.

Current Outstanding

- 2013 GO Bond
  - $5,935,000 outstanding
  - Final Maturity 8/1/2032

- 2014 GO Bond
  - $3,490,000 outstanding
  - Final Maturity 8/1/2034

- 2019 GO Bond
  - $3,000,000 outstanding
  - Final Maturity 8/1/2029

Member FINRA/SIPC/NYSE
© 2024 Hilltop Securities Inc.

Outstanding GO Debt Service

Fiscal Year Ended 6/30	General Obligation		
	Principal	Interest	Total
2024	$ 1,390,000	$ 577,238	$ 1,967,238
2025	1,435,000	521,838	1,956,838
2026	1,490,000	464,003	1,954,003
2027	1,550,000	401,994	1,951,994
2028	1,610,000	336,069	1,946,069
2029	1,680,000	267,394	1,947,394
2030	1,755,000	195,644	1,950,644
2031	1,135,000	137,822	1,272,822
2032	1,180,000	94,555	1,274,555
2033	1,220,000	49,555	1,269,555
2034	395,000	20,256	415,256
2035	410,000	6,919	416,919
	$ 15,250,000	$ 3,073,285	$ 18,323,285

Member FINRA/SIPC/NYSE
© 2024 Hilltop Securities Inc.

Historical Tax Rate For Debt Service

	Tax Year					
	2024	2023	2022	2021	2020	2019
City of Santa Fe	$ 0.408	$ 0.408	$ 0.475	$ 0.567	$ 0.350	$0.487

Source: New Mexico Department of Finance and Administration

Member FINRA/SIPC/NYSE
© 2024 Hilltop Securities Inc.

Historical Assessed Valuation

Santa Fe, New Mexico
Historical Assessed Valuation

Tax Year	Assessed Valuation	Annual Growth
2024	$ 5,733,789,338	2.85%
2023	5,574,965,537	13.63%
2022	4,906,449,372	7.04%
2021	4,583,853,535	0.57%
2020	4,557,743,975	4.69%
2019	4,353,433,480	4.43%
2018	4,168,952,661	2.74%
2017	4,057,665,651	3.24%
2016	3,930,440,558	

Member FINRA/SIPC/NYSE
© 2024 Hilltop Securities Inc.

Santa Fe, New Mexico

$25 million General Obligation Bonds

Preliminary / Subject to Change

Calendar Year	Taxable Assessed Valuation	TAV Growth	Existing Debt	$25,000,000 Bond Issuance Assumed Interest Rate - 4.50% Principal	Interest	Cap. I [1]	Total	AGGREGATE Debt Service	Mill Rate [2]	Calendar Year
2025	$ 5,733,789,338		$ 1,983,688	$ -	$ -	$ -	$ -	$ 1,983,688	0.4080	2025
2026	5,819,796,178	1.50%	1,984,319	-	1,550,000	(562,500)	987,500	2,971,819	0.5211	2026
2027	5,907,093,121	1.50%	1,979,669	-	1,125,000	-	1,125,000	3,104,669	0.5363	2027
2028	5,995,699,518	1.50%	1,982,469	-	1,125,000	-	1,125,000	3,107,469	0.5289	2028
2029	6,085,635,010	1.50%	1,987,319	-	1,125,000	-	1,125,000	3,112,319	0.5219	2029
2030	6,176,919,535	1.50%	1,293,969	185,000	1,125,000	-	1,310,000	2,603,969	0.4302	2030
2031	6,238,688,731	1.00%	1,296,675	190,000	1,116,675	-	1,306,675	2,603,350	0.4258	2031
2032	6,301,075,618	1.00%	1,292,435	205,000	1,108,125	-	1,313,125	2,605,560	0.4219	2032
2033	6,364,086,374	1.00%	421,675	1,085,000	1,098,900	-	2,183,900	2,605,575	0.4178	2033
2034	6,427,727,238	1.00%	423,838	1,130,000	1,050,075	-	2,180,075	2,603,913	0.4134	2034
2035	6,492,004,510	1.00%		1,605,000	999,225	-	2,604,225	2,604,225	0.4093	2035
2036	6,524,464,533	0.50%		1,675,000	927,000	-	2,602,000	2,602,000	0.4069	2036
2037	6,557,086,856	0.50%		1,750,000	851,625	-	2,601,625	2,601,625	0.4049	2037
2038	6,589,872,290	0.50%		1,830,000	772,875	-	2,602,875	2,602,875	0.4030	2038
2039	6,622,821,651	0.50%		1,915,000	690,525	-	2,605,525	2,605,525	0.4014	2039
2040	6,655,935,760	0.50%		2,000,000	604,350	-	2,604,350	2,604,350	0.3993	2040
2041	6,689,215,438	0.50%		2,090,000	514,350	-	2,604,350	2,604,350	0.3973	2041
2042	6,722,661,516	0.50%		2,185,000	420,300	-	2,605,300	2,605,300	0.3954	2042
2043	6,756,274,823	0.50%		2,280,000	321,975	-	2,601,975	2,601,975	0.3930	2043
2044	6,790,056,197	0.50%		2,385,000	219,375	-	2,604,375	2,604,375	0.3914	2044
2045	6,824,006,478	0.50%		2,490,000	112,050	-	2,602,050	2,602,050	0.3891	2045
			$ 14,646,054	$ 25,000,000	$ 16,857,425	$ (562,500)	$ 41,294,925	$ 55,940,979		

[1] Capitalized Interest through 9/15/2025.

[2] Assumes tax collected rate of 98%.

Member FINRA/SIPC/NYSE
© 2024 Hilltop Securities Inc.

Projected Tax Impact on Homeowners

Santa Fe, New Mexico

Tax Impact on Homeowners

Home Market Values	Home Assessed Values [1]	Total Tax Rate $0.5363 Annual	Total Tax Rate $0.5363 Monthly	Tax Rate Increase $0.1283 Annual	Tax Rate Increase $0.1283 Monthly
$100,000	**$33,333**	$17.88	$1.49	**$4.28**	**$0.36**
$200,000	**$66,667**	$35.75	$2.98	**$8.55**	**$0.71**
$300,000	**$100,000**	$53.63	$4.47	**$12.83**	**$1.07**
$400,000	**$133,333**	$71.51	$5.96	**$17.11**	**$1.43**
$500,000	**$166,667**	$89.38	$7.45	**$21.38**	**$1.78**

[2]

(1) Home assessed value is 33 1/3% of market value.

(2) Original projectsions were $.15 increase in tax rate.

Member FINRA/SIPC/NYSE
© 2024 Hilltop Securities Inc.

City of Santa Fe Revenue

Fiscal Year 2024 Review

Overview

Welcome to our presentation on the City of Santa Fe's Revenue for Fiscal Year 2024. Today, we'll examine the key revenue sources and trends that shape our city's financial landscape. We'll focus on our primary revenue streams, including the Gross Receipts Tax (GRT), which forms a significant portion of our income, Intergovernmental Grants from federal and state sources, and the emerging Cannabis Excise Tax. Our discussion will cover recent fiscal year. Throughout the presentation, we'll explore how these revenue sources impact our city's operations and services, providing a comprehensive understanding of Santa Fe's financial foundation.

All Funds Revenue

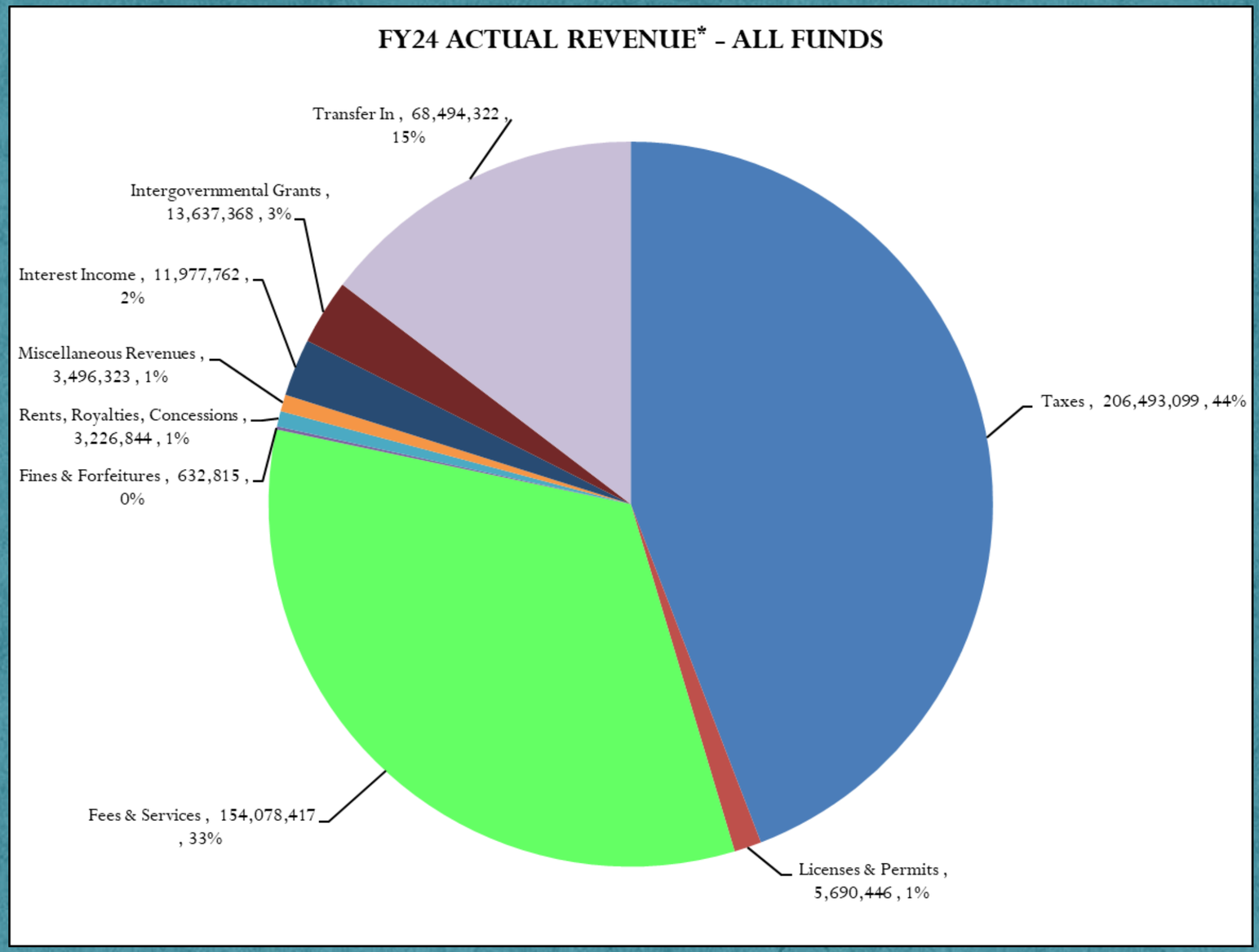

*Unaudited

Gross Receipts Tax

Gross Receipts Taxes are broken into several different increments, as shown in the table to the right. The 0.75 cents labeled “General City Operations” and the majority (94%) of the 4.875 cents from the State are distributed to the General Fund. The other increments are distributed to various other funds/activities as shown in the table. For example: 0.0625 cents of each dollar taxed is dedicated to the Police Department; in FY24, this increment yielded $3.49 million.

*Unaudited-Preliminary FY24 Results

GROSS RECEIPTS TAX		
FOR EVERY $1 IN SALES, 8.1875 CENTS IS CURRENTLY COLLECTED IN GROSS RECEIPTS TAX		
DISTRIBUTED TO:	CENTS	FY24 ACTUAL REVENUE *(unaudited)*
The State (1.225 is returned to the city)	4.8750	68,378,658
Santa Fe County: All	1.5000	N/A (SF County)
City Capital Improvement Plan	0.5000	27,905,189
General City Operations	0.7500	41,857,783
Mun. G.R.T. (Bus System, Quality of Life, Revenue Loss)	0.2500	13,952,574
Mun. G.R.T. Environmental (Wastewater)	0.0625	3,488,149
Mun. G.R.T. - Infrastructure:		
Environmental Svcs.	0.0625	3,488,149
Railyard	0.0625	3,488,149
Police	0.0625	3,488,149
Genoveva Chavez Center	0.0625	3,488,149
TOTAL	8.1875	169,534,947

Fees and Services

- Utility Service Fees comprised approximately half of all Fees & Services for FY24. These included:
  - Water Fees - $43.7 million (25.2% of all Fees & Services);
  - Solid Waste Fees - $28.2 million (16.3% of Fees & Services); and
  - Wastewater Fees - $15.2 million (8.7% of Fees & Services).
- The next-largest category of FY24 Fees & Services was Parking Fees, which amounted to $4.9 million (2.8% of all Fees & Services)
- Ambulance Fees formed the next-largest portion of FY24 Fees & Services, bringing in $3.8 million (2.2% of all Fees & Services)
- The remaining balance of FY24 Fees & Services included Airport Fees, Convention Center Fees, Planning & Land Use Fees, Police/Court Fees, Transit Fees, Recreation Fees, and insurance reimbursements/internal services charges (charged by one Department to another)

*Unaudited-Preliminary FY24 Results

Intergovernmental Grants



The following are actuals reimbursed or earned (not awarded):

Federal Grants
$14.52 Million* (FY23 $7.41 Million)
- DOT (Transit) $6.22 Million*
- ARPA $4.23 Million*
- FAA (Airport) $1.77 Million*

State and Local Grants
$14.5 Million* (FY23 $22.3 Million)
- NMDOT - CIP $5.88 Million*
- NMDOT - Aviation $4.12 Million*

*Unaudited-Preliminary FY24 Results

Cannabis Excise Tax Revenue

Cannabis Tax Revenue*
FY22 $128,136
FY23 $684,754
FY24 $901,650

Cannabis Excise Tax Revenue is deposited into the General Fund of the City and for FY24 represented less than 0.5% of the City's Local/State-Shared Taxes.

Pending > U.S. Drug Enforcement Administration announced that marijuana's legal status changed from Schedule I to III, allowing the possibility of future leveraging in debt offerings.

*Source-NM Tax & Rev RP-500 Report

Thank you very much!

City of Santa Fe

MINUTES

REGULAR MEETING OF
THE FINANCE COMMITTEE
OCTOBER 28, 2024
5:00 PM
COUNCIL CHAMBERS
CITY HALL
200 LINCOLN AVENUE

PROCEDURES FOR FINANCE COMMITTEE MEETING

Viewing: Members of the public may stream the meeting live on the City of Santa Fe's YouTube channel at https://www.youtube.com/user/cityofsantafe. The YouTube live stream can be accessed at this address from most smartphones, tablets, or computers.

Written Public Comment: Members of the public may submit written comments on legislation by clicking on the comment bubble to the right of the meeting on the public portal at https://santafe.primegov.com/public/portal three hours prior to the start of the meeting.

The agenda and packet for the meeting will be posted at https://santafe.primegov.com/public/portal.

1. **CALL TO ORDER**

2. **ROLL CALL**

Members Present:
Chair Carol Romero-Wirth
Councilor Signe Lindell
Councilor Jamie Cassutt
Councilor Lee Garcia

Members Excused:
Councilor Pilar Faulkner

Others Attending:
Emily Oster, Finance Director

3. **APPROVAL OF AGENDA**

MOTION: Chair Romero-Wirth moved, seconded by Councilor Cassutt, to approve the agenda as presented.

VOTE: The motion was approved on the following Roll Call vote:

For: Chair Romero-Wirth, Councilor Lindell, Councilor Cassutt

Against: None

Abstain: None

4. **APPROVAL OF CONSENT AGENDA**

MOTION: Chair Romero-Wirth moved, seconded by Councilor Cassutt, to approve the as amended. Item f, Item g, and Item h were pulled for Discussion.

VOTE: The motion was approved on the following Roll Call vote:

For: Chair Romero-Wirth, Councilor Lindell, Councilor Cassutt

Against: None

Abstain: None

5. **PRESENTATION**

a. Finance Department Staff Recognition. (Emily K. Oster, Finance Director; ekoster@santafenm.gov)

6. **ACTION ITEMS: CONSENT**

a. Request for Approval of the October 7, 2024 Finance Committee Meeting Minutes. (Emily K. Oster, Finance Director; ekoster@santafenm.gov)

Committee Review:
Finance Committee: 10/28/2024

MOTION: Chair Romero-Wirth moved, seconded by Councilor Cassutt, to approve the minutes as presented on Consent.

VOTE: The motion was approved on the following Roll Call vote:

For: Chair Romero-Wirth, Councilor Lindell, Councilor Cassutt

Against: None

Abstain: None

b. Request for Approval to Amend the 2024 Governing Body and Council Committee Calendar to Remove the Finance Committee Meeting Scheduled on Monday, November 25, 2024, and to Remove the Governing Body Meeting Scheduled on Wednesday, November 27, 2024. (Geralyn Cardenas, Interim City Clerk; gfcardenas@santafenm.gov)

Committee Review:
Finance Committee: 10/28/2024
Governing Body: 10/30/2024

MOTION: Chair Romero-Wirth moved, seconded by Councilor Cassutt, to approve the informational as presented.

VOTE: The motion was approved on the following Roll Call vote:

For: Chair Romero-Wirth, Councilor Lindell, Councilor Cassutt

Against: None

Abstain: None

c. Request for Approval of State of New Mexico Department of Transportation Fund 89200 Capital Appropriations Project Agreement in the Amount of $1,170,000 for Median Improvements with a Reversion Date of June 30, 2026. (Scott A. Overlie, Parks and Open Space Project Administrator; saoverlie@santafenm.gov)

1. Request for Approval of a Budget Amendment Resolution (BAR) to Allocate the Capital Appropriations in the Amount of $1,170,000 into FY25 Revenue and Parks and Trails CIP WIP Construction.

Committee Review:
Public Works and Utilities Committee: 10/21/2024
Finance Committee: 10/28/2024
Governing Body: 10/30/2024

MOTION: Chair Romero-Wirth moved, seconded by Councilor Cassutt, to approve the grant as presented on Consent.

VOTE: The motion was approved on the following Roll Call vote:

For: Chair Romero-Wirth, Councilor Lindell, Councilor Cassutt

Against: None

Abstain: None

d. Request for Approval of a Professional Services Agreement with Santa Fe Watershed Association for Management and Administration of the Adopt-A-River and Adopt-an-Arroyo Programs in the Total Amount of $260,000 for a Four Year Term. (Zoe Isaacson, River & Watershed Manager; zrisaacson@santafenm.gov)

Committee Review
Public Works and Utilities Committee:10/21/2024
Finance Committee:10/28/2024
Governing Body: 10/30/2024

MOTION: Chair Romero-Wirth moved, seconded by Councilor Cassutt, to approve the contract as presented on Consent.

VOTE: The motion was approved on the following Roll Call vote:

For: Chair Romero-Wirth, Councilor Lindell, Councilor Cassutt

Against: None

Abstain: None

e. Request for Approval of Amendment No. 1 to General Services Agreement Item #24-0175 with HEI Inc. to Change the Scope for Additional Hardware, Increase the Compensation by $393,080.51 for a New Total Amount of $506,978.62 and to Extend the Termination Date by One Year. (Eric Candelaria, ITT Department Director; edcandelaria @santafenm.gov and Larry Worstell; lfworstell@santafenm.gov)

Committee Review:
Quality of Life Committee: 10/23/2024
Finance Committee: 10/28/2024
Governing Body: 10/30/2024

MOTION: Chair Romero-Wirth moved, seconded by Councilor Cassutt, to approve the contract amendment as presented on Consent.

VOTE: The motion was approved on the following Roll Call vote:

For: Chair Romero-Wirth, Councilor Lindell, Councilor Cassutt

Against: None

Abstain: None

f. Request for the Approval of Amendment No. 1 to General Services Agreement Item #23-0555 with Vermont Systems to Increase the Compensation by $292,985.25 for a New Total Amount of $441,652.90 and to Extend the Term to September 13, 2027. (Eric Candelaria, ITT Department Director; edcandelaria @santafenm.gov)

Committee Review:
Quality of Life Committee: 10/23/2024
Finance Committee: 10/28/2024
Governing Body: 10/30/2024

MOTION: Councilor Garcia moved, seconded by Chair Romero-Wirth, to approve the contract amendment as presented on Discussion.

VOTE: The motion was approved on the following Roll Call vote:

For: Chair Romero-Wirth, Councilor Lindell, Councilor Cassutt, Councilor Garcia

Against: None

Abstain: None

g. Request for Approval of a Budget Amendment Resolution (BAR) in the Amount of $150,000 to the City Manager's Budget to Provide Salary and Benefits for the Office of Equity and Inclusion Director. (Layla Archuletta-Maestas, Deputy City Manager; lsarchulettamaetas@santafenm.gov)

Committee Review:
Quality of Life Committee: 10/23/2024
Finance Commitee: 10/28/2024
Governing Body: 10/30/2024

MOTION: Chair Romero-Wirth moved, seconded by Councilor Garcia, to approve the budget amendment resolution (BAR) as presented on Discussion.

VOTE: The motion was approved on the following Roll Call vote:

For: Chair Romero-Wirth, Councilor Lindell, Councilor Cassutt, Councilor Garcia

Against: None

Abstain: None

h. Request for Approval of a General Services Contract with CTS Software for Transit Dispatch Management Software in the Total Amount of $1,255,529.17 Including NMGRT for a Five Year Term. (Gabrielle Chavez, Transit Director of Administration; gnchavez@santafenm.gov)

1. Request for Approval of a Budget Amendment Resolution (BAR) to Move $381,166 from Transit Fund Balance into FY25 Software Subscriptions for TripMaster Dispatch Management Software.

Committee Review:
Public Works and Utilities Committee: 10/21/2024
Finance Committee: 10/28/2024
Governing Body: 10/30/2024

MOTION: Chair Romero-Wirth moved, seconded by Councilor Garcia, to approve the contract as presented on Discussion.

VOTE: The motion was approved on the following Roll Call vote:

For: Chair Romero-Wirth, Councilor Lindell, Councilor Cassutt, Councilor Garcia

Against: None

Abstain: None

i. Request for Approval of a Budget Amendment Resolution (BAR) in the Total Amount of $6,089,700 to Increase WIP Construction Using U.S. Department of Transportation Federal Aviation Administration Funding for the Reconstruction of the Airport Apron. (James Harris, Airport Manager; jcharris@santafenm.gov and Kelly Bynon, Administrative Manager; kabynon@santafenm.gov)

Committee Review:
Public Works & Utilities Committee: 10/21/2024
Finance Committee: 10/28/2024
Governing Body: 10/30/2024

MOTION: Chair Romero-Wirth moved, seconded by Councilor Cassutt, to approve the budget amendment resolution (BAR) as presented on Consent.

VOTE: The motion was approved on the following Roll Call vote:

For: Chair Romero-Wirth, Councilor Lindell, Councilor Cassutt

Against: None

Abstain: None

j. Request for Approval of Amendment No. 2 to Item #24-0420 Title III Federal and State Sub-Award #2023-24-60026 with North Central New Mexico Economic Development District Non-Metro Area Agency on Aging to Decrease the Compensation by $2,127.45 for a New Total Contract Amount of $773,721.95. (Manuel Sanchez, Division of Senior Services Director; mnsanchez@santafenm.gov)

Committee Review:
Quality of life Committee: 10/23/2024
Finance Committee: 10/28/2024
Governing Body: 10/30/2024

MOTION: Chair Romero-Wirth moved, seconded by Councilor Cassutt, to approve the contract amendment as presented on Consent.

VOTE: The motion was approved on the following Roll Call vote:

For: Chair Romero-Wirth, Councilor Lindell, Councilor Cassutt

Against: None

Abstain: None

k. Request for Approval of a Budget Amendment Resolution (BAR) in the Amount of $402,612 to Increase WIP Design Using FY25 Available Budgeted Airport Revenue in Excess of Budgeted Expenditures to Fund Multiple Engineering and Administrative Task Orders from Molzen Corbin. (James Harris, Airport Manager; jcharris@santafenm.gov and Kelly Bynon, Administrative Manager; kabynon@santafenm.gov)

Committee Review:
Public Works and Utilities Committee: 10/21/2024
Finance Committee: 10/28/2024
Governing Body: 10/30/2024

MOTION: Chair Romero-Wirth moved, seconded by Councilor Cassutt, to approve the budget amendment resolution (BAR) as presented on Consent.

VOTE: The motion was approved on the following Roll Call vote:

For: Chair Romero-Wirth, Councilor Lindell, Councilor Cassutt

Against: None

Abstain: None

l. Request for Approval of Professional Services Contract with AON Consulting, Inc. for Health Benefits Consulting Services in the Total Amount $379,700 for a Four Year Term. (Alvin Valdez, Benefits & Wellness Supervisor, aavaldez1@santafenm.gov and Bernadette Salazar, Human Resources Director, bjsalazar@santafenm.gov)

Committee Review:
Quality of Life Committee: 10/23/2024
Finance Committee 10/28/2024
Governing Body: 10/30/2024

MOTION: Chair Romero-Wirth moved, seconded by Councilor Cassutt, to approve the contract as presented on Consent.

VOTE: The motion was approved on the following Roll Call vote:

For: Chair Romero-Wirth, Councilor Lindell, Councilor Cassutt

Against: None

Abstain: None

m. Request for Approval of a Professional Services Contract with AquaSight LLC for Software Services for the Paseo Real Wastewater Reclamation Facility in the Total Amount of $350,000 for a Three Year Term. (Michael Dozier, Wastewater Division Director; mldozier@santafenm.gov)

Committee Review
Public Works and Utilites Committee: 10/21/2024
Finance Committee: 10/28/2024
Governing Body: 10/30/2024

MOTION: Chair Romero-Wirth moved, seconded by Councilor Cassutt, to approve the contract as presented on Consent.

VOTE: The motion was approved on the following Roll Call vote:

For: Chair Romero-Wirth, Councilor Lindell, Councilor Cassutt

Against: None

Abstain: None

n. Request for Approval of General Services Contract with Ardham Technologies for Broadcom VMware Subscription Licenses and Support in the Total Amount of $499,986.20 through June 30, 2027. (Eric Candelaria, ITT Department Director; edcandelaria@santafenm.gov and Larry Worstell, Infrastructure Services Manager; lfworstell@santafenm.gov)

Committee Review:
Finance Committee 10/28/2024
Governing Body 10/30/2024

MOTION: Chair Romero-Wirth moved, seconded by Councilor Cassutt, to approve the contract as presented on Consent.

VOTE: The motion was approved on the following Roll Call vote:

For: Chair Romero-Wirth, Councilor Lindell, Councilor Cassutt

Against: None

Abstain: None

o. CONSIDERATION OF RESOLUTION 2024-____. (Councilor Alma Castro)
A Resolution Approving Amendment No. 1 to a Local Government Roads Fund Program Cooperative Agreement from the New Mexico Department of Transportation, Identified as Control Number L500532, and Granting a Time Extension for the Planning, Design, and Construction of Henry Lynch Roundabout Project. (Romella Glorioso-Moss, Capital Projects Manager; rsglorioso-moss@santafenm.gov)

Committee Review:
Governing Body (Introduced): 10/09/2024
Public Works and Utilities Committee: 10/21/2024
Finance Committee: 10/28/2024
Governing Body: 10/30/2024

MOTION: Chair Romero-Wirth moved, seconded by Councilor Cassutt, to approve the resolution as presented on Consent.

VOTE: The motion was approved on the following Roll Call vote:

For: Chair Romero-Wirth, Councilor Lindell, Councilor Cassutt

Against: None

Abstain: None

p. CONSIDERATION OF RESOLUTION 2024-____. (Councilor Amanda Chavez and Councilor Carol Romero-Wirth)
A Resolution Directing the City Manager to Direct Staff to Identify and Apply for Federal and State Funding Sources for Water, Wastewater, and Other Water Related Projects; Identify A State Legislative Priority List; and Approve the Applications Submitted to the New Mexico Water Trust Board.

Committee Review:
Public Works and Utilities Committee (Introduced): 10/21/2024
Finance Committee: 10/28/2024
Governing Body: 10/30/2024

MOTION: Chair Romero-Wirth moved, seconded by Councilor Cassutt, to approve the resolution as presented on Consent.

VOTE: The motion was approved on the following Roll Call vote:

For: Chair Romero-Wirth, Councilor Lindell, Councilor Cassutt

Against: None

Abstain: None

7. **ACTION ITEMS: DISCUSSION**

8. **EXECUTIVE SESSION**

9. **MATTERS FROM STAFF**

10. **MATTERS FROM THE COMMITTEE**

11. **MATTERS FROM THE CHAIR**

12. **NEXT MEETING: Tuesday, November 12, 2024**

13. **ADJOURN**

Erminia Tapia
Liaison

Chair

City of Santa Fe, New Mexico
Memorandum

Date: October 23, 2024

To: Governing Body
Finance Committee
Quality of Life Committee
Public Works and Utilities Committee

From: Xavier Vigil, Committee and Contracts Coordinator XIV

Via: Geralyn Cardenas, Assistant City Clerk

Re: 2025 Council Committee and Governing Body Committee Meeting Calendar

---

Item and Issue

Request for Approval of the 2025 Council Committee and Governing Body Meeting Calendar. (Xavier Vigil, Committee and Contracts Coordinator; xivigil@santafenm.gov)

Background and Summary

The 2025 Council Committee and Governing Body Meeting Calendar will follow the same scheduling sequence that was used in creating last year's calendar. There are no major changes in comparison to the previous year's calendar.

Recommended Action

Approve the 2025 Council Committee and Governing Body Meeting Calendar.

Signature: 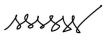

Email: gfcardenas@santafenm.gov

2025 Committee Meeting Calendar Memo

Final Audit Report 2024-10-24

Created:	2024-10-23
By:	XAVIER VIGIL (xivigil@santafenm.gov)
Status:	Signed
Transaction ID:	CBJCHBCAABAA3fy1K2UkqZDD3lVjge_VL5jNXVfXSewh

"2025 Committee Meeting Calendar Memo" History

Document created by XAVIER VIGIL (xivigil@santafenm.gov)
2024-10-23 - 7:23:57 PM GMT- IP address: 63.232.20.2

Document emailed to GERALYN CARDENAS (gfcardenas@santafenm.gov) for signature
2024-10-23 - 7:24:18 PM GMT

Email viewed by GERALYN CARDENAS (gfcardenas@santafenm.gov)
2024-10-24 - 8:52:51 PM GMT- IP address: 104.47.64.254

Document e-signed by GERALYN CARDENAS (gfcardenas@santafenm.gov)
Signature Date: 2024-10-24 - 8:53:01 PM GMT - Time Source: server- IP address: 63.232.20.2

Agreement completed.
2024-10-24 - 8:53:01 PM GMT

Powered by Adobe Acrobat Sign

CITY OF SANTA FE

2025 GOVERNING BODY & COUNCIL COMMITTEE CALENDAR

- GOVERNING BODY
- FINANCE COMMITTEE
- PUBLIC WORKS & UTILITIES COMMITTEE
- QUALITY OF LIFE COMMITTEE

JANUARY

S	M	T	W	Th	F	Sa
			1	2	3	4
5	6	7	8	9	10	11
12	13	14	15	16	17	18
19	20	21	22	23	24	25
26	27	28	29	30	31	

FEBRUARY

S	M	T	W	Th	F	Sa
						1
2	3	4	5	6	7	8
9	10	11	12	13	14	15
16	17	18	19	20	21	22
23	24	25	26	27	28	

MARCH

S	M	T	W	Th	F	Sa
						1
2	3	4	5	6	7	8
9	10	11	12	13	14	15
16	17	18	19	20	21	22
23	24	25	26	27	28	29
30	31					

APRIL

S	M	T	W	Th	F	Sa
		1	2	3	4	5
6	7	8	9	10	11	12
13	14	15	16	17	18	19
20	21	22	23	24	25	26
27	28	29	30			

MAY

S	M	T	W	Th	F	Sa
				1	2	3
4	5	6	7	8	9	10
11	12	13	14	15	16	17
18	19	20	21	22	23	24
25	26	27	28	29	30	31

JUNE

S	M	T	W	Th	F	Sa
1	2	3	4	5	6	7
8	9	10	11	12	13	14
15	16	17	18	19	20	21
22	23	24	25	26	27	28
29	30					

JULY

S	M	T	W	Th	F	Sa
		1	2	3	4	5
6	7	8	9	10	11	12
13	14	15	16	17	18	19
20	21	22	23	24	25	26
27	28	29	30	31		

AUGUST

S	M	T	W	Th	F	Sa
					1	2
3	4	5	6	7	8	9
10	11	12	13	14	15	16
17	18	19	20	21	22	23
24	25	26	27	28	29	30
31						

SEPTEMBER

S	M	T	W	Th	F	Sa
	1	2	3	4	5	6
7	8	9	10	11	12	13
14	15	16	17	18	19	20
21	22	23	24	25	26	27
28	29	30				

OCTOBER

S	M	T	W	Th	F	Sa
			1	2	3	4
5	6	7	8	9	10	11
12	13	14	15	16	17	18
19	20	21	22	23	24	25
26	27	28	29	30	31	

NOVEMBER

S	M	T	W	Th	F	Sa
						1
2	3	4	5	6	7	8
9	10	11	12	13	14	15
16	17	18	19	20	21	22
23	24	25	26	27	28	29
30						

DECEMBER

S	M	T	W	Th	F	Sa
	1	2	3	4	5	6
7	8	9	10	11	12	13
14	15	16	17	18	19	20
21	22	23	24	25	26	27
28	29	30	31			

VIEW MEETINGS AND AGENDAS: **SANTAFE.PRIMEGOV.COM/PUBLIC/PORTAL**

2025 Governing Body and Council Committee Calendar

Governing Body

01/15/2025
01/29/2025
02/12/2025
02/26/2025
03/12/2025
03/26/2025
04/09/2025
04/30/2025
05/14/2025
05/28/2025
06/11/2025
06/25/2025
07/09/2025
07/30/2025
08/13/2025
08/27/2025
09/10/2025
09/24/2025
10/08/2025
10/29/2025
11/12/2025
12/10/2025

Finance Committee

01/13/2025
01/27/2025
02/10/2025
02/24/2025
03/10/2025
03/24/2025
04/07/2025
04/28/2025
05/12/2025
05/27/2025
06/09/2025
06/23/2025
07/07/2025
07/28/2025
08/11/2025
08/25/2025
09/08/2025
09/22/2025
10/06/2025
10/27/2025
11/10/2025
12/10/2025

Public Works and Utilities Committee

01/06/2025
01/21/2025
02/03/2025
02/17/2025
03/03/2025
03/17/2025
03/31/2025
04/21/2024
05/05/2025
05/19/2025
06/02/2025
06/16/2025
06/30/2025
07/21/2025
08/04/2025
08/18/2025
09/02/2025
09/15/2025
09/29/2025
10/20/2025
11/03/2025
12/01/2025

Quality of Life Committee

01/08/2025
01/22/2025
02/05/2025
02/19/2025
03/05/2025
03/19/2025
04/02/2025
04/23/2025
05/07/2025
05/21/2025
06/04/2025
06/18/2025
07/02/2025
07/23/2025
08/06/2025
08/20/2025
09/03/2025
09/17/2025
10/01/2025
10/22/2025
11/05/2025
12/03/2025

CITY OF SANTA FE

Date: October 30, 2024

To: Governing Body

Via: Regina Wheeler, Public Works Director RW (Oct 30, 2024 12:32 MDT)
Henri Hammond-Paul, Community Health and Safety Director HENRI HAMMOND-PAUL (Oct 31, 2024 09:34 MDT)

From: **Brian Williams, Office of Emergency Management Director** BRIAN WILLIAMS (Oct 30, 2024 11:04 MDT)

Subject: **Building Resilience Infrastructure in Communities (BRIC) Grant Approval – Microgrids Scoping and Design**

ITEM AND ISSUE:
Request Approval of the 2022 FEMA Building Resilient Infrastructure in Communities (BRIC) Sub-award Grant Agreement EMT-2022-BR-001 in the total amount of $524,999 with the New Mexico Department of Homeland Security and Emergency Management for the Design of Microgrids for Community Resiliency. Brian Williams, Director Office of Emergency Management, bgwilliams@santafenm.gov.

Request Approval of a FY25 Budget Amendment Resolution (BAR) in the Total Amount of $524,999 to Budget FY25 expenditures, grant revenue, and required local match for the sub-recipient grant award from FEMA.

Action Requested: Grant Approval; BAR approval

BACKGROUND AND SUMMARY:
In 2020, the Emergency Management Office worked with the Departments of Community Health and Safety, Fire, Public Works and Utilities to create a list of priority resiliency projects to set forth for funding. Working with FEMA and the State Homeland Security Department, two projects were selected to complete the application process and have been awarded funding.

In alignment with the City of Santa Fe Disaster Mitigation Plan and following the approach outlined in the Department of Defense Climate Adaption Plan, the City of Santa Fe will scope a project with the goal of powering facilities with renewable microgrids to ensure essential services such as water, wastewater, transportation and emergency services during a disaster. Specific facilities that will be assessed for feasibility to be powered with renewable microgrid include drinking water pumps, wastewater plant and collection pumps, emergency operations center, emergency shelter facilities, Santa Fe Regional Airport, Santa Fe Trails Transit Operations Facility, and police and fire stations.

City facilities and residents experience power outages during disasters including extensive flooding which occurred in July 2018, intense electrical storms which occur every summer and fire, which has thankfully not occurred in recent history, but was very close to City limits in Spring 2022. The City has backup generators on some critical facilities, but this project would undertake an assessment to provide power using renewable microgrids. Renewable microgrids utilize battery storage, control logic and renewable energy generation to power facilities without the need for access to diesel fuel.

With this project, the City of Santa Fe would not only create resiliency and reduce human suffering and property loss during a disaster, but also power more City daily operations with renewable power, further reducing climate impacts. There may be significant energy cost savings and broader grid benefits during normal operations resulting from energy storage and controls at facilities that could significantly reduce peak demand and energy use during peak times.

Building on the City's significant behind the meter solar capacity at key City facilities and in partnership with private enterprise and the community, the City would undertake an Investment Grade Audit to:

1. Identify the facilities that combined would create a backbone of essential services of water, wastewater, transportation and emergency services. Ensure maximum leverage of existing behind the meter solar capacity.
2. Determine feasibility of designing and installing a renewable microgrid behind the meter at each facility to provide 5 days of power.
3. Design microgrid systems for each facility complete
4. Develop energy savings estimates, construction cost estimates, equipment specifications and construction project plans.

Public Works Department will manage the project, while the Office of Emergency Management will manage the grant and interfacing with both FEMA, and the New Mexico Department of Homeland Security and Emergency Management. Once this feasibility and design phase of the project are completed, additional FEMA funding will be sought for construction.

This Building Resilient Infrastructure in Communities (BRIC) Grant provides a 75% federal share of $399,990.75 and requires 25% local share of $125,008.25. The grant amount includes a 100% federally funded Subrecipient Management Costs $24,966.00 to assist with staff capacity in managing the grant.

The term of the agreement will expire on February 14, 2027.

PROCUREMENT METHOD:
Not applicable. Grant approval only.

Supporting Information:

CONTRACT NUMBER:
The FY25 Project ledger number is PWD2531532

SOURCE/REVENUE: ☒Expense ☒Revenue

The funding source is: FEMA Building Resilient Infrastructure in Communities (BRIC) Grant

Fund Name/Number: Resource CIP/315
Munis Org Name/Number: Resource Conservation CIP / 3159981
Munis Expense Object Name/Number: WIP Construction / 572970
Munis Expense Object Name/Number: Fed Grant (FEMA) / 490580

If the project is grant funded? List grant award number*:* *EMT-2022-BR-001*

Grant Manager / Accounting Officer Approval: Matthew Bonifer Matthew Bonifer (Oct 31, 2024 10:36 MDT) **Date:** 10/31/2024

Comment/Exceptions: _____

Project Ledger #: PWD2531532

Budget Officer Approval: Andy Hopkins **Date:** 10/31/2024
Comment/Exceptions: _____

CAPITAL ASSET (will this procurement result in a tangible item that costs more than $5,000?):

☒**Yes** | ☐ **No**

 # (if known): _____

Repair or Replacement of Existing Equipment:

☐**Yes** | ☒ **No**

Capital Project:
(New and improvement projects that are going to cost $10,000 or more)
☒ **Yes** | ☐ **No**

Project Ledger #: P WD 253 1,532

Anticipated length of project: 3 YEARS

Asset Manager Approval: _____ **Date:** _____
Comment/Exceptions: _____

Department Approvals:
IT Components: ☐ **Yes** | ☒ **No**
Vehicles: ☐ **Yes** | ☒ **No**
Facilities, Furniture, Fixtures, Equipment: ☐ **Yes** | ☒ **No**

Department Contract Administrator Contact Info:
Amanda Archuleta, ajarchuleta@santafenm.gov;
Halona Crowe, hcrowe@santafenm.gov

ATTACHMENTS:

1. Sub-Recipient Grant Agreement
2. Budget Amendment Resolution

Log # *{Finance use only}*:	
Journal # *{Finance use only}*:	

City of Santa Fe, New Mexico
BUDGET AMENDMENT RESOLUTION (BAR)

DEPARTMENT / DIVISION NAME	DATE
Public Works / Resource Conservation CIP	10/22/2024

ITEM DESCRIPTION	ORG	OBJECT	PROJECT	INCREASE	DECREASE
EXPENDITURES				*{enter as positive #}*	*{enter as negative #}*
WIP Construction - Critical Infrastructure Microgrids Scoping	3159981	572970	PWD2531532	500,033	
Professional Contracts - Critical Infrastructure Microgrids	2212850	510300	PWD2531532	24,966	
WIP Construction - 1/2 % GRT	3650416	572970			(125,008)
Capital Transfer to Resource Conservation CIP	3650416	760315		125,008	
REVENUES				*{enter as negative #}*	*{enter as positive #}*
FEMA - Critical Infrastructure Microgrids Scoping	3159981	490580	PWD2531532	(375,025)	
Federal Emergency Management Agency (GRANT)	2212850	490580	PWD2531532	(24,966)	
Capital Transfer from 1/2% GRT	3159981	660365		(125,008)	
				$ 125,008	$ (125,008)

JUSTIFICATION: *(use additional page if needed)*
--Attach supporting documentation/memo

FY 25 budget increase for sub-recipient grant award from Department of Homeland Security BRIC for Critical Infrastructure Microgrids Scoping in the amount of $399,991 with a local match requirement of $125,008 (from available CIP funds in 1/2% GRT fund) for a total amount of $524,999 (expires 02/14/2027)

{Complete section below if BAR results in a net change to ANY Fund}

Fund(s) Affected	Fund Balance Increase/(Decrease)
TOTAL:	

Halona Crowe — 10/22/2024
Prepared By *{print name}* — Date

Division Director Signature *{optional}* — Date

HENRI HAMMOND-PAUL (Oct 31, 2024 09:34 MDT) 10/31/2024
Department Director Signature — Date

{Use this form for Finance Committee/ City Council agenda items ONLY}

CITY COUNCIL APPROVAL

City Council Approval Date

Agenda Item #:

Andy Hopkins — 10/31/2024
Budget Officer — Date

Finance Director *{≤ $5,000}* — Date

City Manager *{≤ $60,000}* — Date

State of New Mexico
DEPARTMENT OF HOMELAND SECURITY & EMERGENCY MANAGEMENT
P.O. Box 27111
Santa Fe, NM 87502

SUB-RECIPIENT GRANT AGREEMENT

FY22 Building Resilient Infrastructure and Communities (BRIC)

Federal Grant No.: EMIT-2022-BR-001 Assistance Listing: 97.047

1. SUB-GRANT NO.	2. SUB-RECIPIENT NAME	3. PROJECT NAME	
EMT-2022-BR-001	City of Santa Fe	Critical Infrastructure Microgrids Scoping	
4. STATE DFA VENDOR NUMBER	**5. EIN NUMBER**	**6. SAM UEI NUMBER**	**7. CAGE CODE**
54360	856000168	QLN2YKMMJ8X6	4C987
8. SUB-RECIPIENT PHYSICAL ADDRESS	**9. SUB-RECIPIENT REMIT ADDRESS**		
200 Lincoln Ave. Santa Fe, NM 87504	200 Lincoln Ave. Santa Fe, NM 87504		
10. DHSEM CONTACT NAME:	**11. CONTACT DESK PHONE:**	225-313-1774	
Natalie West	**CONTACT EMAIL ADDRESS:**	DHSEM.mitigation@dhsem.nm.gov cc: natalie.west@dhsem.nm.gov	
12a. PERFORMANCE PERIOD START DATE	2/15/2024	**12b. PERFORMANCE PERIOD END DATE**	2/14/2027
13. TOTAL AWARD AMOUNT:	$524,999.00		
13a. FEDERAL SHARE	**13b. LOCAL SHARE**	**13c. STATE SHARE**	
$399,990.75	$125,008.25	$0.00	

	14a. NAME OF PROJECT AWARD	14b. FEDERAL SHARE	14c. NON-FEDERAL SHARE
1	Contractual	$375,024.75	$125,008.25
2	Subrecipient Management Costs	$24,966.00	$
3		$	$
4		$	$
5		$	$

6		$	$
TOTAL AMOUNT OF PROJECT		$399,990.75	$125,008.25

WHEREAS The State of New Mexico will serve as the "pass-through entity" with respect to the State's role in providing sub-awards and administering grant assistance provided to sub-recipients and may, subject to a Memorandum of Agreement, directly support project development and administration.

WHEREAS funding has been obligated from the Federal Emergency Management Agency pursuant to a request by the applicant, The Sub-Recipient, City of Santa Fe.

NOW, THEREFORE, it is mutually understood and agreed between the recipient NMDHSEM, and **City of Santa Fe,** hereinafter referred to as "sub-recipient," as follows:

ARTICLE 1: REQUIREMENTS AND ASSURANCES

A. The sub-recipient hereby agrees that the performance period for the grant identified on Page 1, Box 1. is consistent with the performance period identified on Page 1, Box 12a. and 12b. This Sub-recipient Grant Agreement, as amended, shall remain open for administrative purposes if necessary to achieve final payment and financial reconciliation.

B. The sub-recipient hereby agrees that the sub-recipient official signing this Sub-recipient Grant Agreement certifies that all financial expenditures, including all supporting documents submitted for reimbursement, have been incurred by the sub-recipient and are eligible and allowable expenditures consistent with the guidelines for this award. The sub-recipient agrees to follow reasonable professional standards in all financial management and bookkeeping procedures necessary to carry out this agreement.

C. The sub-recipient hereby agrees that no member, officer, or employee of the sub-recipient organization, or its designees or agents, no member of the governing body of the locality in which the program is situated, and no other public official of such locality or localities who exercises any functions or responsibilities with respect to the program during his or her tenure or for one year after that, shall have any interest, direct or indirect, in any contract or subcontract, or the process thereof, for work to be performed in connection with this Sub-recipient Grant Agreement; the sub-recipient shall incorporate in all such contracts a provision prohibiting such interest pursuant to the purposes of this Sub-recipient Grant Agreement.

D. The sub-recipient hereby agrees that it understands and agrees that it cannot use any federal funds, either directly or indirectly, in support of the enactment, repeal, modification, or adoption of any law, regulation, or policy, at any level of government, without the express written approval of the State of New Mexico or FEMA.

E. The sub-recipient hereby agrees that FEMA reserves a royalty-free, non-exclusive, and irrevocable license to reproduce, publish, or otherwise use and authorize others to use, for federal government purposes: (1) the copyright in any work developed under this Sub-recipient Grant Agreement; and (2) any rights of copyright to which the sub-recipient purchases ownership with federal support. The sub-recipient agrees to consult with FEMA through NMDHSEM regarding allocating any patent rights that arise from or are purchased with this funding.

F. The sub-recipient hereby agrees that signatures of the sub-recipient officials on this Sub-recipient Grant Agreement attest to the sub-recipient's understanding, acceptance, and compliance with Lobbying, Debarment, Suspension, and Other Responsibility Matters; Drug- free Workplace; Conflict of Interest, and Non-Supplanting certifications. Federal funds will not be used to supplant state or local funds. Federal funds will be used to supplement existing sub-recipient funding to augment program activities and not replace those funds which have been appropriated in the budget for the same purpose.

G. The sub-recipient hereby agrees that their accounting system allows for the separation of fund sources. Funding provided under this Sub-recipient Grant Agreement cannot be commingled with funds from other federal, state, or local agencies, and each project must be accounted for separately.

H. The sub-recipient hereby agrees that it shall comply with applicable Federal Civil Rights Laws and Regulations: Title VI of the Civil Rights Act of 1964, Section 504 of the Rehabilitation Act of 1973, Title IX of the Education Amendments of 1972, Age Discrimination Act of 1975, and Americans with Disabilities Act of 1991. The sub-recipient will take reasonable steps to ensure Limited English Proficient (LEP) persons have meaningful access to its programs and activities. Executive Order 13379 Individuals with Disabilities in Emergency Preparedness, requires the government to support safety and security for individuals with disabilities in situations involving disasters, including earthquakes, tornadoes, fires, floods, hurricanes, and acts of terrorism.

I. The sub-recipient hereby certifies that for its employees, it has an Affirmative Action Plan/Equal Employment Opportunity Plan (EEOP) if not exempted by the Federal Government or New Mexico rule or statute. An EEOP is not required for sub-recipients of less than $25,000 or fewer than 50 employees.

J. The sub-recipient hereby certifies that its employees are eligible to work in the United States as verified by Form I–9, Immigration & Naturalization Service Employment Eligibility.

K. The sub-recipient hereby agrees that it is the responsibility of the sub-recipient to fully understand and comply with the requirements of the following, where such requirements apply to the sub-recipient set forth in:

1. 2 C.F.R. § 200: Code of Federal Regulations
2. 44 C.F.R. parts 7, 9, 10, 13, 14, 17, 18, 25, 206, 220, 221, 44 C.F.R. Part 209, 2 C.F.R. Part 200 and any other applicable FEMA policy memoranda and guidance documents
3. FEMA Hazard Mitigation Assistance Program and Policy Guide
4. New Mexico State Procurement Code
   New Mexico Administrative Code Title 2 – Public Finance https://www.srca.nm.gov/nmac-home/nmac-titles/title-2-public-finance/

ARTICLE 2: REIMBURSEMENT OF FUNDS

The NMDHSEM will apply the following procedures for making payments to sub-recipients:

A. Payment of Funds, General: Once FEMA has obligated funds and NMDHSEM has budgeted and encumbered those funds, the Cabinet Secretary is authorized to advance funds, as permissible, and to consider requests for payments for progress and completion based on proper review and approvals, in accordance with the sub-grant agreement or amendment as described below. Review and audit of expending and accounting of federal awards and state funds will be conducted to ensure records, reports, and documentation for compliance and tracing of funds are accounted for; 2 C.F.R.

§§ 200.302(b)(6), 200.305(a). The State Department of Finance and Administration (DFA) may require additional supporting data and documents prior to disbursement of funds.

B. Reimbursement shall be based upon authorized and allowable expenditures consistent with the project narrative, grant guidelines, and timely submission of Financial and Performance Progress Reports. Reimbursement of expenditures shall be requested quarterly or monthly if need be for expenditures within the performance period. A minimum of 25% (of the total project cost) in the non-federal match must be included on each request for reimbursement. All expenditures must be supported with source documentation (e.g., copies of proof of payment, invoices, receipts, timesheets with name/rate/hours and certified, breakdown of expenditures based on FEMA approved budget, warrants, a brief description of work done, required deliverables, etc.). Request for reimbursement will not be processed if quarterly financial or performance reports are delinquent. The final payment of 15% will not be made until DHSEM verifies that all activities are complete. All payments shall be made on an actual cost reimbursement basis.

C. Contracts: All requests for proposals/bids, sole–source procurements, single vendor responses to a competitive bid, and contracts require DHSEM pre–approval prior to implementation. The relevant contract must accompany requests for reimbursement for contractual services.

D. Local Match: Local matching funds must clearly support the source, the amount, and the timing of all matching contributions. When requesting reimbursement, the match percentage must be shown on each invoice. Copies of proof of payment, invoices, receipts, purchase orders, timesheets with name/wage/hours, cost allocation, general ledger, warrants, etc., must be submitted as a backup for the match.

E. Non-reimbursable Expenses:

- Transfer of funds between any programs. Contracts, single vendor response to a competitive bid, sole source contracts, and any procurement documentation not pre-approved by DHSEM.
- Training and related travel costs not pre-approved by DHSEM.
- Supplanting (using federal funds to purchase items previously budgeted for with state or local funds).
- Maintenance and/or wear and tear costs of general use vehicles and emergency response apparatus.
- Equipment purchased for an exercise cannot be used for permanent installation and/or beyond the scope of an exercise.
- Weapons and ammunition.
- Entertainment and sporting events
- Personal items such as laundry, personal hygiene items, magazines, in-room movies, personal travel, and personal phone calls.
- Travel insurance, visa, and passport charges.
- Lodging costs in excess of State per diem, as appropriate.
- Lunch when travel is wholly within a single day.
- Standalone working meals.
- Bar charges, alcoholic beverages.
- Finance, late fees, or interest charges.
- Lobbying, political contributions, and legislative liaison activities.
- Organized fundraising, including salaries of persons while engaged in these activities.
- Expenditures not supported with appropriate documentation when submitted for reimbursement. Only properly documented expenditures will be processed for payment. Unsupported expenditures will be returned to the jurisdiction for resubmission.

F. Payment Conditions. The sub-recipient must certify that in requesting and accepting a sub-grant payment, they have spent those funds on eligible expenditures; that the work performed was within the scope of work allowed for specific projects; and that all records pertinent to specific projects will be retained for at least the periods required under record retention regulation requirements from the closeout of the last project. The period of record retention for grant and financial data is three years if state funds are paid.

G. Delays and Denial of Payment. Reasons for delays in FEMA processing of payment requests include, but are not limited to, the following:

- Vendor identification number is missing or incorrect;
- Disaster and project number is missing;
- Period of performance (POP) listed is incorrect;
- Service delivery dates do not agree with invoices or outside of contract period;
- Dollar amount on forms do not agree;
- Mathematical errors;
- Full address of sub-grantee is not included;
- Sub-recipient did not provide required back-up documentation; or

Reasons for NMDHSEM declining payment requests include, but are not limited to, the following:

- The POP has expired;
- The amount exceeds the remaining funding available for disbursement prior to the final financial and program compliance reviews (the hold or funding retention amount);
- Request for payment requires a state and/or budget amendment, and cannot be processed until the amendment request is received/approved;
- The reimbursement requested is for an activity outside of the approved scope of work;
- Forms are not signed by an authorized person, or are signed by only one signatory;
- Reimbursement of awarded funds have been suspended due to a non-compliance issue such as failure to submit quarterly reports; or
- Reimbursements of awarded funds have been suspended due to noncompliance activities.

Sub-recipients can reduce the likelihood of delays in processing of payment requests by checking for accuracy prior to submission.

ARTICLE 3: AUDITING AND REPORTING REQUIREMENTS

A. Quarterly Reports. In accordance with 2 C.F.R. § 200.328, the Applicant shall submit quarterly reports to the NMDHSEM beginning with the first full quarter after the signature date on the Sub-recipient Grant Agreement. The NMDHSEM will provide sub-recipient a form for this report. Quarterly reports are due no later than the 15th of the month following the end of the quarter - January 15, April 15, July 15, and October 15.

In order that NMDHSEM may adequately evaluate the progress and status of each sub-grant, quarterly reports shall contain a description of the work accomplished to date, the methods and procedures used, the anticipated completion date, a summary of all project costs to date, and other such information as may be of assistance in its evaluation of the project.

Reports shall be sent to the Department of Homeland Security & Emergency Management, Recovery Unit, P.O. Box 27111, Santa Fe, NM 87502, or electronically to DHSEM.mitigation@dhsem.nm.gov.

B. Additional Reporting Requirements. The sub-recipient must immediately report in writing to the NMDHSEM Mitigation Unit any alleged acts or allegations of fraud or misappropriation of funds for

work authorized under this Sub-recipient Grant Agreement. This extends to reporting any legal action, lawsuit, bankruptcy, or other action that may jeopardize the successful completion of any authorized project. Additional reporting and financial reconciliation requirements may also be requested at NMDHSEM and FEMA's request. Failure to comply with these requests may jeopardize funding and may be a breach of this Sub-recipient Grant Agreement.

C. Enforcement. The NMDHSEM may suspend drawdowns, impose other special conditions, or take other authorized action pursuant to 2 C.F.R. § 200.339 (Remedies for Noncompliance) if the sub-recipient does not submit accurate and timely reports. This may include, among other things, the administrative closeout of a grant and/or any projects under a grant when the sub-recipient is not responsive to reasonable efforts NMDHSEM makes to collect required reports needed to complete closeout. Administrative closeout is a unilateral mechanism by NMDHSEM to move forward with project or grant closeout using available grant information in lieu of final reports. This can require NMDHSEM to make cash or cost adjustments and ineligible cost determinations, which may result in identifying a debt owed to FEMA and/or NMDHSEM.

D. Financial Procedures. The sub-recipient agrees to maintain financial procedures and support documents and to establish and maintain a proper accounting system to record expenditures of disaster assistance funds in accordance with generally accepted accounting principles or as directed by the Governor's Authorized Representative, to account for the receipt and expenditure of funds under this Agreement. If applicable, RECIPIENT / SUBGRANTEE shall conduct audit(s) pursuant to the Single Audit Act of 1984, 31 U.S.C. § 7501 et. seq., 44 C.F.R. Part 14, 2 C.F.R. Part 200, 0MB Circular A-133, "Audits of States, Local Governments, and Non-profit Organizations," and applicable New Mexico laws, rules and regulations. Further, sub-recipient must provide a hard copy of the Single Audit Report within sixty (60) days of the close of its fiscal year. Otherwise, pursuant to 44 C.F.R. § 13.43, NMDHSEM may withhold or suspend payments under any grant award.

The sub-recipient shall retain all financial records, supporting documents, statistical records, and any other documents pertinent to this contract for a period of five years after the date of submission of the final expenditures report. However, if litigation or an audit has been initiated prior to the expiration of the three-year period, the records shall be retained until the litigation or audit findings have been resolved.

E. Authorizing Statute. This award is made under the provisions of the Robert T. Stafford Disaster Relief and Emergency Assistance Act, Pub. L. No. 93-288 (1974) (codified as amended at 42 U.S.C. §§ 5121-5207) (Stafford Act), in accordance with 44 C.F.R. § 206.44.
All scopes of work and costs approved as a result of this Sub-recipient Grant Agreement, whether as estimates or final costs approved through subawards, PWs, or otherwise, will incorporate by reference the terms of this Sub-recipient Grant Agreement and must comply with applicable laws, regulations, policy, and guidance in accordance with this Sub-recipient Grant Agreement.

Pursuant to Executive Order 13858 Strengthening Buy-American Preferences for Infrastructure Projects, FEMA encourages recipients to use, to the greatest extent practicable and consistent with the law, iron and aluminum as well as steel, cement, and other manufactured products produced in the United States in Public Assistance and HMGP eligible public infrastructure repair and construction projects affecting surface transportation, ports, water resources including sewer and drinking water, and power. Such preference must be consistent with the law, including cost and contracting requirements at 2 C.F.R. Part 200.

F. Additional Terms and Conditions. The following additional sub-grant agreement documents are fully incorporated into this Sub-recipient Grant Agreement and thereby constitute additional terms and conditions of this agreement.

- The Stafford Act, its implementing regulations contained in Title 44 of the C.F.R., and FEMA policy and guidance.
- **Hazard Mitigation Assistance Guide (March 2023)**
- The Uniform Administrative Requirements, Cost Principles, and Audit Requirements for Federal Awards set forth at 2 C.F.R. Parts 200 and 3002.
- Attachment 1 United States Department of Homeland Security (USDHS) Standard Terms and Conditions (January 24, 2022) in effect on the date of the Declaration which are incorporated by reference into this Sub-recipient Grant Agreement
- Attachment 2 Reimbursement Checklist
- Attachment 3 Glossary and Definitions
- Attachment 4 Acronyms

ARTICLE 4: SCOPE OF WORK

A. As authorized by the Robert T. Stafford Disaster Relief and Emergency Assistance Act (the Stafford Act), as amended (42 U.S.C. § 5121 et seq.), and Section 662 of the Post Katrina Emergency Reform Act of 2006, as amended (6 U.S.C. § 762), the **City of Santa Fe.** The has been awarded funds for Critical Infrastructure Microgrids Scoping. Funds shall be utilized as outlined in the approved budget as awarded by FEMA on **2/15/2024**. The Sub Recipient shall match the Federal Award Amount of **$399,990.75**, with a local jurisdictional amount of **$125,008.25**, for a total project cost of **$524,999.00** All work performed pursuant to this agreement must comply with the approved FEMA application. All work must be completed within the performance period, between **2/15/2024 – 2/14/2027** The **City of Santa Fe** shall not sub-grant any part of this award to any other entity or organization. Within the first reporting quarter, all awards require confirmation that expenditures in the budget category toward this project will be made. If not, DHSEM may execute a de-obligation of Federal funds without recourse by the **City of Santa Fe.**

B. Approved projects must commence within the first reporting quarter. If a project cannot commence and be operational within the first reporting quarter of the approved award date, the sub–Recipient must submit a written statement to DHSEM, signed by the sub-recipient signatory officials, justifying the delay in implementation, the expected starting date, and a formal request to extend the project start date past the first reporting quarter. At the sole discretion of DHSEM, the grant award is subject to cancellation, and funds may be de-obligated and reallocated to other projects.

ARTICLE 5: PUBLICATIONS

A. Publications created with funding under this grant shall prominently contain the following statement or a DHSEM pre-approved modification: **This Document was prepared under a sub-grant from the FEDERAL EMERGENCY MANAGEMENT AGENCY, and the NEW MEXICO DEPARTMENT OF HOMELAND SECURITY AND EMERGENCY MANAGEMENT. Points of view or opinions expressed in this document are those of the authors and do not necessarily represent the official position or policies of the Federal Emergency Management Agency and the New Mexico Department of Homeland Security and Emergency Management.**

ARTICLE 6: PERFORMANCE PERIODS

The performance period for this sub-grant award is **2/15/2024 – 2/14/2027.** Further, all personnel-related grant activity must be completed between **2/15/2024 – 2/14/2027**. Funds may not be obligated outside of these time periods. An obligation occurs when funds are encumbered, as with a purchase order and/or commitment of salaries and benefits**. All obligated and encumbered funds *must be liquidated* within 45 days of the end of the performance period when the *Final Progress and Financial Reports* are due**.

ARTICLE 7: RECOVERY OF FUNDS FOR DUPLICATION OF BENEFITS AND INELIGIBLE ACTIVITIES

A. Ineligible Activities. The FEMA and/or NMDHSEM may disallow costs and recover funds based on the results of audit or review during or after performance of the award to ensure compliance with the terms of the Sub-recipient Grant Agreement and award document. The FEMA and/or NMDHSEM is required to recover funds when the sub-recipient has ineligible underruns (for example, actual costs for a PA large project are less than the amount awarded based on initial estimates); knowingly or negligently withholds or misrepresents material information; fails to complete work and comply with the terms of this Sub-recipient Grant Agreement or the approved award; expends federal funds in error; or incurs costs that are unreasonable or otherwise disallowed. If, after exhaustion of appeal rights, FEMA and/or NMDHSEM determines a debt is owed, the State has 30 days to resolve the amount owed before the debt is referred to the FEMA Finance Center for collection. The State may do so by directly paying FEMA. The State may also deposit the amount owed directly into the applicable subaccount in U.S. Health and Human Services (HHS)/Smartlink and notify FEMA when it has reimbursed that subaccount, after which FEMA will de-obligate that amount in the subaccount. Alternatively, the sub-recipient may request to substitute unallowable costs for other costs that are allowable (e.g., necessary, allocable, and reasonable under the same award and have not yet been reimbursed by FEMA).

B. Duplication of Benefits. In accordance with the provisions of 42 U.S.C. § 5155 (Section 312 of the Stafford Act), duplication of benefits is prohibited. The NMDHSEM must take all actions necessary and reasonable to ensure that all who receive federal assistance are aware of their responsibility to repay federal assistance that is duplicated by amounts available from insurance or any other source for the same purpose. The FEMA and/or NMDHSEM may at any time, pre-award or post-award, adjust the level of funding provided to account for financial assistance provided from any other source for the same purpose as the federal assistance or to account for benefits available for the same purpose from another source, irrespective of whether they are actually received. The sub-recipient shall notify NMDHSEM, as soon as practicable, of the existence of any insurance coverage for the costs identified in the application and of any entitlement to or recovery of funds from any other source for the project costs, including Small Business Administration funding, United States Department of Agriculture (USDA), and other Federal, State, and private funding. The amount of duplicate sources available shall reduce allowable costs. The sub-recipient shall be liable to NMDHSEM to the extent that the sub-recipient receives duplicate benefits from any other source for the same purposes for which the sub-recipient has received payment from the NMDHSEM.

C. Cooperation. The NMDHSEM agrees, on its behalf and on behalf of its political subdivisions and others that receive federal assistance, to cooperate with the Federal Government in seeking recovery of federal assistance against any party or parties whose intentional acts or omissions or whose negligence or other tortious conduct may have caused or contributed to the damage or hardship for which federal assistance was provided under this Sub-recipient Grant Agreement. If applicable, FEMA will treat recovered funds as duplicated benefits available to NMDHSEM/sub-recipient in accordance with Section 312 of the Stafford Act (codified as amended at 42 U.S.C. § 5155).

D. NMDHSEM Responsibilities. The NMDHSEM is responsible for recovering federal assistance expended in error, misrepresentation, fraud, or for costs otherwise disallowed or unused.

a. The NMDHSEM must notify FEMA of any potential debt as a result of federal funds expended in error, misrepresentation, fraud, or for costs otherwise disallowed or unused.

b. The NMDHSEM must report all cases of suspected fraud to the USDHS Office of Inspector General. The NMDHSEM must cooperate with any investigation conducted by the USDHS Office of Inspector General. The NMDHSEM must cooperate with FEMA regarding any and all lawsuits that may result from the NMDHSEM or FEMA's attempt to recover funds or disallow costs.

E. Statute of Limitations. The 3-year statute of limitations limiting FEMA's ability to initiate an administrative action to recover funds paid as provided for in Section 705(a) of the Stafford Act (codified as amended at 42 U.S.C. § 5205(a)) begins with:

a. Initiation of an Administrative Action to Recover Payment. The initiation of an administrative action to recover payment includes FEMA's written notice to the NMDHSEM or a sub-recipient of a questioned or disallowed cost or improper payment (including a request for information concerning such cost or payment) and written notice to the NMDHSEM or a sub-recipient of a FEMA or 3rd party review or audit.

F. Refunds, Rebates, and Credits. The NMDHSEM must transfer to FEMA the appropriate share, based on the federal support percentage, of any refund, rebate, credit or other amounts arising from the performance of this Sub-recipient Grant Agreement. The NMDHSEM must take necessary action to promptly collect all monies due or which may become due and if applicable, to cooperate with the Federal Government in any claim or suit in connection with amounts due.

G. Non-Compliant Sub-recipients. As per 2 C.F.R. §§ 200.207, 200.303(d) and 200.338(A-F), NMDHSEM can selectively use any or all the following remedies and prompt actions for non-compliance with any term of an award to include audit finding(s):

a. Increased monitoring of projects and require additional financial and performance reports.
b. Disallow advance payment process.
c. Temporarily withhold payments pending correction of the deficiency.
d. Disallow or deny use of funds and matching credit for all or part of the cost of the activity or action not in compliance.
e. Request FEMA to completely or partially de-obligate funding for a project.
f. Temporarily withhold payments pending correction of the deficiency by the sub-recipient.
g. Withhold further awards for the grant program.
h. Take other programmatic or legally available remedies.

ARTICLE 8: CONSTRUCTION REQUIREMENTS

A. The NMDHSEM must ensure that all applicable federal, state, and local permits and approvals are obtained, and all permit conditions are addressed before the start of any construction activity, including FEMA and NMDHSEM/sub-recipient compliance with the National Environmental Policy Act, the National Historic Preservation Act, the Endangered Species Act, and all other applicable environmental laws and executive orders. All construction should be in accordance with approved permits, projects plans and specifications, applicable building codes, and program guidance.

ARTICLE 9: NATIONAL ENVIRONMENTAL POLICY ACT (NEPA)/ENVIRONMENTAL PLANNING AND HISTORIC PRESERVATION (EHP) COMPLIANCE

A. The sub-recipient must provide information to FEMA the legally required environmental planning and historic preservation (EHP) review and to ensure compliance with the applicable EHP laws and Executive Orders (EO). These EHP requirements include but are not limited to National Environmental Policy Act, National Historic Preservation Act, Endangered Species Act, E 11988 Floodplain Management, EO 11990 Protection of Wetlands, and EO 12898 Environmental Justice. The sub-recipient must comply with all federal, state, local, tribal, and territorial EHP requirements and obtain applicable permits and clearances.

B. Sub-recipients shall not undertake any activity from the project that would result in ground disturbance, facility modification, or relates to the use of sonar equipment without the prior approval of FEMA. These

include but are not limited to communications towers, physical security enhancements involving ground disturbance, new construction, and modifications to buildings that are 50 years old or older, and exercises. The sub-recipient must comply with all mitigation or treatment measures required for the project as the result of FEMA's EHP review. An EHP Screening Form does not need to be provided for those exercises that are planned to take place at previously approved facilities, such as, fire and police academies, search and rescue training facilities, and explosive testing centers. Any type of exercise that requires any type of land, water, or vegetation disturbance or building of temporary structures must undergo an EHP review.

C. Any change to an approved project description will require re-evaluation for compliance with EHP requirements before the project can proceed. If ground disturbing activities occur during project implementation, the sub-recipient must ensure monitoring of ground disturbance and if any potential archeological resources are discovered, the sub-recipient will immediately cease construction in that area and notify NMDHSEM, FEMA and the New Mexico Historic Preservation Division. Initiation of these activities prior to completion of FEMA's EHP review will result in a non-compliance finding and may result in ineligibility of grant funding.

ARTICLE 10: PROPERTY AND EQUIPMENT MANAGEMENT

A. The sub-recipient will follow the property standards articulated in 2 C.F.R. § 200.310 through 2 CFR 200.326. The sub-recipient shall, when practical, prominently display the following on any equipment purchased with award funds: **PURCHASED WITH FUNDS PROVIDED BY THE FEDERAL EMERGENCY MANAGEMENT AGENCY.** No equipment purchased with these grant funds may be assigned to other entities or organizations without the expressed approval in writing from DHSEM prior to the jurisdiction's encumbrance or expenditure for that equipment.

B. The subrecipient will follow the property standards articulated in 2 C.F.R. § 200.310 through 2 C.F.R. § 200.326. The subrecipient shall maintain an effective property management system; safeguards to prevent loss, damage or theft; maintenance procedures to keep equipment in good condition; and disposition procedures. A Property Inventory Report shall be submitted to NMDHSEM annually each January 30 with the Financial Progress Report during the performance period, and continued submission is required annually until final disposition of the equipment. The subrecipient shall, when practical, prominently display the following on any equipment purchased with award funds: Purchased with funds provided by the U.S. Department of Homeland Security. No equipment purchased with these grant funds may be assigned to other entities or organizations without the expressed approval in writing from NMDHSEM, prior to the jurisdiction's encumbrance or expenditure for that equipment.

C. Any disposition of property or equipment must be in accordance with 2 C.F.R. § 200.313(e) and pre-approved by FEMA through NMDHSEM.

ARTICLE 11: SUBRECIPIENT MONITORING POLICY

A. In accordance with 2 C.F.R. § 200.328, NMDHSEM may periodically monitor a sub-recipient's projects to ensure that program goals, objectives, timelines, budgets, and other related program criteria are being met. The NMDHSEM reserves the right to periodically review and conduct analysis of the sub-recipient's financial, programmatic, and administrative policies and procedures. This monitoring may include review of accounting for receipts and expenditures, cash management, maintaining adequate financial records, means of allocating and tracking costs, contracting, procurement, records management, payroll, means of allocating staff costs, property and equipment management system, progress of project activities, etc. This may include unscheduled desk audits and field inspections. The sub-recipient shall accommodate all such requests within reason. If the sub-recipient encounters any unanticipated problem with the Scope of Work, allowed costs, procurement, permitting, or other difficulty, the sub-recipient must communicate that

problem to NMDHSEM promptly. Work on affected projects must be suspended until the problem is resolved. Technical assistance is available from NMDHSEM staff.

B. The sub-recipient will immediately, no later than 24-hours upon notice, report to NMDHSEM allegations of wrong-doing on the part of any contractor, sub-contractor, agent or employee of the sub-recipient, or other interested party in reference to the work authorized under this Sub-recipient Grant Agreement. This extends to any legal action, lawsuit, bankruptcy, or other action that may jeopardize the successful completion of any authorized project.

ARTICLE 12: PROCUREMENT

A. Procurement shall comply with all federal, state, and local procurement requirements including 2 C.F.R. § 200.320 and the New Mexico Procurement Code for expenditure of funds under this Agreement. The Applicant must conform to applicable state and federal law and the Procurement Standards Sections 2 C.F.R. § 200.317-326, and Appendix II. Contractors that develop or draft specifications, requirements, Statements of Work, and/or Requests for Proposals (RFP) for a proposed procurement shall be excluded from bidding or submitting a proposal to compete for the award of such procurement. Local bidder's preference is not allowed for federally funded procurements. Procurement transactions shall be conducted to provide maximum open and free competition.

B. When procuring property and services under this agreement, the sub-recipient will follow 2 C.F.R. § 200.318 through 2 C.F.R. § 200.326 and Appendix II. The sub-recipient must use its own documented procurement procedures which reflect applicable state, local, tribal, and territorial laws, and regulations, provided that the procurements conform to applicable federal law and the standards identified in 2 C.F.R. § 200. As such, the sub-recipient must use one of the methods of procurement identified in 2 C.F.R. § 200.320.

C. Also, per 2 C.F.R. § 200.318(i), subrecipients are required to maintain and retain records sufficient to detail the history of procurement covering at least the rationale for the procurement method, selection of contract type, contractor selection or rejection, and the basis for the contract price. States and territories are encouraged to maintain and retain this information as well and are reminded that in order for any cost to be allowable, it must be adequately documented per 2 C.F.R. § 200.403(g). Examples of the types of documents that would cover this information include but are not limited to:

- **a.** Solicitation documentation, such as requests for quotes, invitations for bids, or requests for proposals;
- **b.** Responses to solicitations, such as quotes, bids, or proposals;
- **c.** Pre-solicitation independent cost estimates and post-solicitation cost/price analyses on file for review by federal personnel, if applicable;
- **d.** Contract documents and amendments, including required contract provisions; and
- **e.** Other documents required by federal regulations applicable at the time a subgrant is awarded to a subrecipient.

D. Procurement from Minority Owned and Women Owned Business is encouraged and must be tracked and reported to NMDHSEM on the quarterly reports. Procurement transactions shall be conducted to provide maximum open and free competition. Each sole–source procurement single vendor response to a competitive bid, and all purchases require prior approval of NMDHSEM.

E. The sub-recipient will follow the property standards articulated in 2 C.F.R. § 200.310 through 2 C.F.R. § 200.326. The sub-recipient shall maintain an effective property management system; safeguards to prevent loss, damage or theft; maintenance procedures to keep equipment in good condition; and disposition procedures. Property and equipment records shall be maintained for a period of three years following the final disposition, replacement or transfer of the property and equipment.

ARTICLE 13: CONTRACTS

A. Contractors that develop or draft specifications, requirements, Statements of Work, and/or Requests for Proposals (RFP) for a proposed procurement shall be excluded from bidding or submitting a proposal to compete for the award of such procurement. Local bidder's preference is not allowed for federally funded procurements. Procurement transactions shall be conducted to provide maximum open and free competition. Each sole–source procurement, single vendor response to a competitive bid, and all purchases require prior approval of DHSEM.

B. Any contract shall comply with the requirements of Procurement Standards Sections of 28 C.F.R. Parts 66 and 70, 2 C.F.R. Part 200 and OMB Circulars A–102 "Uniform Administrative Requirements for Grants and Cooperative Agreements with State and Local Governments" for expenditure of Federal funds under this Sub-recipient Grant Agreement. Applicants shall submit procurement and contracts to NMDHSEM for review prior to approval. Contracts for professional services must meet applicable local, state, and federal requirements. All contractors must be licensed in New Mexico for the type of work that is required. Prior to any contracted work beginning, the sub-recipient shall provide NMDHSEM with a copy of the contractor's license. Contract work must not exceed the scope of work and PW awarded amount prescribed by FEMA, unless requested through a scope of work change and approval from FEMA.

C. Any contract entered during this sub-grant period shall comply with local, State, and Federal government contracting regulations. Professional and consultant services contracts must include local, State, and Federal government-required contract language, a project budget, SOW, and a pay schedule. ***All contracts require pre-approval by DHSEM prior to execution.*** Contract deliverables must meet the intent of the grant application and grant requirements. Justification is required for compensation for individual consultant services, which must be reasonable and consistent with the amount paid for similar services in the marketplace. Detailed invoices and time and effort reports are required for consultants.

ARTICLE 14: COMPETITION AND CONFLICTS OF INTEREST

A. Among the requirements of 2 C.F.R. § 200.319(b) applicable to all non-federal entities other than states, in order to ensure objective contractor performance and eliminate unfair competitive advantage, contractors that develop or draft specifications, requirements, statements of work, or invitations for bids or requests for proposals must be excluded from competing for such procurements. The FEMA considers these actions to be an organizational conflict of interest and interprets this restriction as applying to contractors that help a subrecipient develop its grant application, project plans or project budget. This prohibition also applies to the use of former employees to manage the grant or carry out a contract when those former employees worked on such activities while they were employees of the non-federal entity.

B. Under this prohibition, unless the subrecipient solicits for and awards a contract covering both development and execution of specifications (or similar elements as described above), and this contract was procured in compliance with 2 C.F.R. §§ 200.317 – 200.327, federal funds cannot be used to pay a contractor to carry out the work if that contractor also worked on the development of those specifications. This rule applies to all contracts funded with federal grant funds, including pre-award costs, such as grant writer fees, as well as post-award costs, such as grant management fees. Additionally, some of the situations considered to be restrictive of competition include, but are not limited to:

- **a.** Placing unreasonable requirements on firms for them to qualify to do business;
- **b.** Requiring unnecessary experience and excessive bonding;
- **c.** Noncompetitive pricing practices between firms or between affiliated companies;
- **d.** Noncompetitive contracts to consultants that are on retainer contracts;
- **e.** Organizational conflicts of interest;

f. Specifying only a "brand name" product instead of allowing "an equal" product to be offered and describing the performance or other relevant requirements of the procurement; and

g. Any arbitrary action in the procurement process.

C. Per 2 C.F.R. § 200.319(c), the subrecipient must conduct procurements in a manner that prohibits the use of statutorily or administratively imposed state, local, tribal, or territorial geographical preferences in the evaluation of bids or proposals, except in those cases where applicable federal statutes expressly mandate or encourage geographic preference. Nothing in this section preempts state licensing laws. **When contracting for architectural and engineering services, geographic location may be a selection criterion, provided its application leaves an appropriate number of qualified firms, given the nature and size of the project, to compete for the contract.**

D. Under 2 C.F.R. § 200.318(c)(1), the subrecipient is required to maintain written standards of conduct covering conflicts of interest and governing the actions of their employees engaged in the selection, award, and administration of contracts. **No employee, officer, or agent may participate in the selection, award, or administration of a contract supported by a federal award if he or she has a real or apparent conflict of interest.** Such conflicts of interest would arise when the employee, officer or agent, any member of his or her immediate family, his or her partner, or an organization that employs or is about to employ any of the parties indicated herein, has a financial or other interest in or a tangible personal benefit from a firm considered for a contract. The non-federal entity's officers, employees, and agents may neither solicit nor accept gratuities, favors, or anything of monetary value from contractors or parties to subcontracts. However, subrecipient entities may set standards for situations in which the financial interest is not substantial, or the gift is an unsolicited item of nominal value. The standards of conduct must provide for disciplinary actions to be applied for violations of such standards by officers, employees, or agents of the non-federal entity.

E. Under 2 C.F.R. § 200.318(c)(2), if the subrecipient has a parent, affiliate, or subsidiary organization that is not a state, local, tribal or territorial government, the subrecipient must also maintain written standards of conduct covering organizational conflicts of interest. In this context, organizational conflict of interest means that because of a relationship with a parent company, affiliate, or subsidiary organization, the subrecipient is unable or appears to be unable to be impartial in conducting a procurement action involving a related organization. The non-federal entity must disclose in writing any potential conflicts of interest to FEMA or NMDHSEM in accordance with applicable FEMA policy.

ARTICLE 15: CONTRACTS

A. Contracts for professional and consultant services executed during this grant period must include federal, state, local, tribal, and territorial government required contract language, a project budget, and require pre-approval by NMDHSEM prior to implementation. Contract deliverables must meet the intent of the grant application and grant requirements. Justification is required for compensation for individual consultant services, which must be reasonable and consistent with the amount paid for similar services in the marketplace. Detailed invoices and time and effort reports are required for consultants. *See* 2 C.F.R. § 200.1, 2 C.F.R. § 200 Appendix II to Part 200.

ARTICLE 16: AUDIT REQUIREMENTS

A. As a federal grant recipient, the State of New Mexico requires a sub-recipient expending $750,000 or more in federal funds in the organization's fiscal year to conduct an organization–wide audit in accordance with the Single Audit described in 2 C.F.R. § 200.501. The sub-recipient will permit state or federal officials and auditors to have access to sub-recipient and contractor records and financial statements as necessary for

the state to comply with 2 C.F.R. § 200.501. Copies of audit findings must be submitted to NMDHSEM within 30 days after the sub-recipient receives its audit report, or within a 9-month period of the grant closeout date, whichever is earlier. Include the federal agency name, program, grant number, the CFDA title and number, and the name of the pass-through agency (NMDHSEM) in all documents.

ARTICLE 17: RECORDS RETENTION

A. Records Retention.

a. **State Requirement.** The State must retain records for three years after all projects are complete and the federal disaster is formally closed out, except in certain rare circumstances described in 2 C.F.R. § 200.334 (Retention requirements for records), from the date it submits the final Federal Financial Report (SF-425) to FEMA in compliance with 2 C.F.R. § 200.334. If FEMA administratively closes the grant where no final SF-425 was submitted, FEMA uses the date the grant was administratively closed as the start date for the three-year record retention period.

b. **Sub-recipient Requirement.** The sub-recipients must retain project or subaward records for at least three years from the date that the NMDHSEM submits to FEMA the final expenditure report for a project or subaward. If, however, there is any litigation, claim, negotiation, audit, request for information, or other action involving the project or subaward that starts before that date, the records must be retained until completion of the action and resolution of all issues which arise from it, or until the end of the three-year period, whichever is later.

c. The sub-recipient will follow the record retention and access standards articulated in 2 C.F.R. § 200.333 through 2 C.F.R. § 200.337. The grant financial and administrative records shall be maintained for a period of three years following the date of the closure of the grant award, or audit if required. Time and effort, personnel and payroll records for all individuals reimbursed under the award must be maintained. Property and equipment records shall be maintained for a period of three years following the final disposition, replacement or transfer of the property and equipment.

d. The sub-recipient will be required to maintain project records until the expiration of the appropriate retention period. This includes records related to Management Costs, procurement, contracting, accounts payable, engineering, inventory, force account (materials, labor, and equipment), insurance settlements or other records related to the project scope of work. Retention procedures are outlined in the Hazard Mitigation Assistance Grant Programs Administrative Plan.

ARTICLE 18: CHANGES TO AWARD

A. All change requests must be submitted either in writing or electronically to the NMDHSEM contact for review 90 days prior to the termination of this Sub-recipient Grant Agreement. All change requests must be accompanied by a justification narrative and a budget and spending plan. All change requests must be consistent with the scope of the project and grant guidelines. Change requests will be considered only if reporting requirements are current, and all other terms and conditions of this Sub-recipient Grant Agreement have otherwise been met at the time of the request. If approved by NMDHSEM and FEMA, changes in the programmatic activities, purpose of the project, key personnel specified on the grant award, contractual services for activities central to the purposes of the award, change in project site, or release of special conditions, will result in an amendment to this award. Requests for changes must be formally submitted to NMDHSEM and FEMA.

B. Changes to this Sub-recipient Grant Agreement will be made via a Sub-recipient Grant Agreement Amendment. The NMDHSEM will prepare each Amendment when needed. No Sub-recipient Grant

Agreement Amendment is valid until fully executed.

ARTICLE 19: REMEDIES FOR NONCOMPLIANCE

A. For the reasons listed below, special conditions may be imposed, reimbursements may be partially or wholly withheld, the award may be wholly or partly suspended or terminated, or future awards, reimbursements and award modifications may be withheld. The NMDHSEM may institute the following, but is not limited to, withholding authority to proceed to the next phase of a project, requiring additional or more detailed financial reports, additional project monitoring, and/or establish additional prior approvals. The NMDHSEM shall notify the sub-recipient of its decision in writing stating the nature and the reason for imposing the conditions/restrictions, the corrective action required and timeline to remove them, and the method of requesting reconsideration of the imposed conditions/restrictions. The sub-recipient must respond within five days of receipt of notification.

- **a.** Unwillingness or inability to attain project goals or scope of work.
- **b.** Unwillingness or inability to adhere to Special Conditions of this Sub-recipient Grant Agreement.
- **c.** Failure or inability to adhere to grant guidelines and federal compliance requirements.
- **d.** Improper procedures regarding contracts and procurements.
- **e.** Failure to submit reliable and/or timely reports.
- **f.** Fiscal management which does not meet reasonable professional standards.
- **g.** Failure or inability to adhere to the terms and conditions of this Sub-recipient Grant Agreement.
- **h.** Unwillingness or inability to obtain permits required by law to perform the eligible work.
- **i.** Noncompliance with any and all federal, state, local and tribal grant requirements.

B. The NMDHSEM shall notify the sub-recipient of any non-compliance issues in writing and shall attempt to arrive at a resolution in a timely and reasonable fashion. If corrective action is required, NMDHSEM and the sub-recipient shall determine a timeline and landmarks for remediation. The NMDHSEM may require additional detailed financial reports or additional project monitoring. The ultimate penalty for non-compliance with the terms and conditions of this Sub-recipient Grant Agreement is for payments to be withheld or for the award to be suspended or terminated. The sub-recipient agrees to make restitution if necessary.

C. The NMDHSEM may take action as it determines appropriate under the circumstances including but not limited to withholding of payments, disallowance of costs, suspension or termination of the award if the sub-recipient fails to comply with applicable Federal and State statutes, regulations, or the terms of this Sub-recipient Grant Agreement pursuant to 2 C.F.R. § 200.339.

D. Nothing in this section abrogates the sub-recipient's right of appeal.

ARTICLE 20: TERMINATION

A. **For Cause:** In compliance with 2 C.F.R. § Part 200.340(a)(1), if performance is not occurring as agreed, the award may be reduced or terminated without compensation for reduction or termination costs. The NMDHSEM will provide notice of five days to the subrecipient stating the reasons for the action, steps taken to correct the problems, and the commencement date of the reduction or termination. The NMDHSEM will reimburse the subrecipient only for acceptable work or deliverables, necessary and allowable costs incurred through the date of reduction or termination. Final payment may be withheld at the discretion of NMDHSEM until completion of a final NMDHSEM review. Disposition of any equipment acquired under a terminated grant must be in accordance with 2 C.F.R. § 200.313(e).

B. For Convenience: In compliance with 2 CFR Part 200.340(a)(4), this Agreement may be terminated without cause by the subrecipient upon written notice setting forth the reasons for such termination, and the effective date at least 30 days prior to the intended date of termination. A termination pursuant to this provision does not nullify a party's obligations for performance, or liabilities for failure to perform already incurred prior to the date of termination. Any project may be terminated upon convenience, in whole or in part, for the convenience of the subrecipient; though a partial termination notification must specify that portion of the project which is to be terminated. Allowable costs obligated and/or incurred through the date of termination shall be reimbursed. Disposition of any equipment acquired under a terminated grant must be in accordance with 2 C.F.R. § 200.313(e).

ARTICLE 21: CLOSEOUT OF SUB-GRANT

A. Closeout of Projects. Per 2 C.F.R. § 200.344, sub-recipients must submit all cost and supporting documentation for completed projects. The NMDHSEM will review and verify all costs and supporting documents to validate compliance. Failure to comply will result in de-obligation of the project. The NMDHSEM will close each sub-recipient file once it has conducted full review and approval of all supporting documents for compliance and all projects are completed and has project activity closed out.

a. **Management Costs.** Management Costs will be used for internal staff salaries, contractor payments and other support costs associated with this grant. This will be in accordance with all laws, rules, and FEMA regulations. Management Costs will be processed in accordance with the Hazard Mitigation Assistance Program and Policy Guide.

The NMDHSEM commits to closeout of all grants regardless of the availability of management costs.

ARTICLE 22: SPECIAL CONDITIONS

A. The terms of this Sub-recipient Grant Agreement are contingent upon sufficient appropriations and authorizations being made by the USDHS FEMA under the Robert T. Stafford Disaster Relief and Emergency Assistance Act U.S.C. §§ 5121-5207. If sufficient appropriations and authorizations are not made by FEMA this Sub-recipient Grant Agreement shall terminate immediately upon written notice being given by NMDHSEM to the sub-recipient. The decision of NMDHSEM shall be final.

B. If NMDHSEM proposes an Amendment to the Sub-recipient Grant Agreement to unilaterally reduce funding, the sub-recipient shall have the option to terminate the Sub-recipient Grant Agreement or agree to the reduced funding within 30 days of receipt of the proposed Amendment.

C. Each party shall be solely responsible for fiscal or other sanctions occasioned because of its own violation of requirements applicable to the performance of this Sub-recipient Grant Agreement. Each party shall be liable for its own actions or inactions in accordance with state law and nothing herein shall be deemed a waiver, indemnity or to otherwise create or effect liabilities between the parties.

D. The grant award amount is a funding allocation and is not to be interpreted as expenditure authorizations or approvals.

E. All awarded projects must be planned for, conducted, budgeted, and expended within the designated performance period.

F. Quarterly financial and progress reports are due on October 15, January 15, April 15, and July 15, within the POP. Final reports are due 15 days after the end of POP.

G. All revision requests must be reviewed and approved by NMDHSEM staff. All requests must meet the original scope of the project which may result in a sub-recipient grant amendment.

H. A revision of a project's SOW must be pre-approved by NMDHSEM staff before the jurisdiction can proceed with the request for approval process. If the revision is approved, NMDHSEM staff may request additional documentation to proceed with recommendation to NMDHSEM Leadership for final approval.

I. The beneficiary of this award is solely responsible for all expenditures that are incurred outside of the award performance period. All expenditures that are incurred above and beyond the amount of this Sub-recipient Grant Agreement are the sole responsibility of the sub-recipient of this award.

J. Procurement from Minority Owned and Women Owned Business is encouraged and must be tracked and reported to NMDHSEM on the quarterly reports.

K. Upon completion of all awarded projects, any remaining funds will be de-obligated and reverted to NMDHSEM for return to FEMA.

L. Extensions due to exigent or emergency circumstances will be determined by NMDHSEM on a case-by-case basis.

State of New Mexico
Department of Homeland Security & Emergency Management
P.O. Box 27111
Santa Fe, NM 87502

The acceptance of a subgrant from the United States and the State of New Mexico creates a legal duty and obligation on the part of the sub-recipient to use the funds or property made available in accordance with the conditions of the grant as administered by and through the New Mexico Department of Homeland Security and Emergency Management. By signing this obligating award document, the sub-recipient certifies it has read, understood, and accepted these documents as binding.

SUB-RECIPIENT GRANT AGREEMENT
Signatures of Acceptance

SUB-GRANT NO:			
JURISDICTION GRANT PROGRAM MANAGER PRINTED NAME:			
OFFICIAL SIGNATURE:		**DATE:**	
CONTACT NUMBER:		**E-MAIL ADDRESS:**	
JURISDICTION CHIEF FINANCIAL OFFICER PRINTED NAME:			
OFFICIAL SIGNATURE:		**Date:**	
CONTACT NUMBER:		**E-MAIL ADDRESS:**	
JURISDICTION SIGNATORY OFFICIAL PRINTED NAME:			
OFFICIAL SIGNATURE:		**DATE:**	
CONTACT NUMBER:		**E-MAIL ADDRESS:**	
NMDHSEM MITIGATION PROGRAM BUREAU CHIEF PRINTED NAME:			
NMDHSEM MITIGATION PROGRAM BUREAU CHIEF OFFICIAL SIGNATURE / DATE:			
NMDHSEM GRANTS MANAGEMENT BUREAU CHIEF PRINTED NAME:			
NMDHSEM GRANTS MANAGEMENT BUREAU CHIEF OFFICIAL SIGNATURE / DATE:			
NMDHSEM DEPUTY CABINET SECRETARY OFFICIAL PRINTED NAME:			
NMDHSEM DEPUTY CABINET SECRETARY OFFICIAL SIGNATURE / DATE:			

Print one original agreement, sign and email to: DHSEM.MITIGATION@DHSEM.nm.gov

CITY OF SANTA FE:

_____
ALAN WEBBER, MAYOR

DATE:_____

ATTEST:

_____
CITY CLERK

CITY ATTORNEY'S OFFICE:

_____
ASSISTANT CITY ATTORNEY

APPROVED FOR FINANCES:

Emily K. Oster 11/01/2024
_____
FINANCE DIRECTOR

The page is intentionally left blank.

ATTACHMENT 1
USDHS Standard Terms and Conditions
(January 24, 2022)

The Fiscal Year (FY) 2022 USDHS Standard Terms and Conditions apply to all new federal financial assistance awards funded in FY 2022. These terms and conditions flow down to sub-recipients unless an award term or condition specifically indicates otherwise. The United States has the right to seek judicial enforcement of these obligations.

All legislation and digital resources are referenced with no digital links. The FY 2022 USDHS Standard Terms and Conditions will be housed on dhs.gov at www.dhs.gov/publication/fy15-dhs- standard-terms-and-conditions.

A. Assurances, Administrative Requirements, Cost Principles, Representations and Certifications

I. USDHS financial assistance recipients must complete either the Office of Management and Budget (OMB) Standard Form 424B Assurances – Non-Construction Programs, or OMB Standard Form 424D Assurances – Construction Programs, as applicable. Certain assurances in these documents may not be applicable to your program, and the USDHS financial assistance office (USDHS FAO) may require applicants to certify additional assurances. Applicants are required to fill out the assurances as instructed by the awarding agency.

II. USDHS financial assistance recipients are required to follow the applicable provisions of the Uniform Administrative Requirements, Cost Principles, and Audit Requirements for Federal Awards located at Title 2, Code of Federal Regulations (C.F.R.) Part 200 and adopted by USDHS at 2 C.F.R. Part 3002.

III. By accepting this Agreement, recipients, and their executives, as defined in 2 C.F.R. § 170.315, certify that their policies are in accordance with OMB's guidance located at 2 C.F.R. Part 200, all applicable federal laws, and relevant Executive guidance.

B. General Acknowledgements and Assurances

All recipients, sub-recipients, successors, transferees, and assignees must acknowledge and agree to comply with applicable provisions governing USDHS access to records, accounts, documents, information, facilities, and staff.

I. Recipients must cooperate with any USDHS compliance reviews or compliance investigations conducted by USDHS.

II. Recipients must give USDHS access to examine and copy records, accounts, and other documents and sources of information related to the federal financial assistance award and permit access to facilities or personnel.

III. Recipients must submit timely, complete, and accurate reports to the appropriate USDHS officials and maintain appropriate backup documentation to support the reports.

IV. Recipients must comply with all other special reporting, data collection, and evaluation requirements, as prescribed by law, or detailed in program guidance.

V. Recipients (as defined in 2 C.F.R. Part 200 and including recipients acting as pass-through entities) of federal financial assistance from USDHS or one of its awarding component agencies must complete the USDHS Civil Rights Evaluation Tool within thirty (30) days of receipt of the Notice of Award for the first award under which this term applies. Recipients of multiple awards of USDHS financial assistance should only submit one completed tool for their organization, not per award. After the initial submission, recipients are required to complete the tool once every two (2) years if they have an active award, not every time an award is made. Recipients should submit the completed tool, including supporting materials, to CivilRightsEvaluation@hq.dhs.gov. This tool clarifies the civil rights obligations and related reporting requirements contained in the USDHS

Standard Terms and Conditions. Sub-recipients are not required to complete and submit this tool to USDHS. The evaluation tool can be found at https://www.dhs.gov/publication/dhs- civil-rights-evaluation-tool.

The USDHS Office for Civil Rights and Civil Liberties will consider, in its discretion, granting an extension if the recipient identifies steps and a timeline for completing the tool. Recipients should request extensions by emailing the request to CivilRightsEvaluation@hq.dhs.gov prior to expiration of the 30-day deadline.

C. Standard Terms & Conditions

I. Acknowledgement of Federal Funding from USDHS

Recipients must acknowledge their use of federal funding when issuing statements, press releases, requests for proposal, bid invitations, and other documents describing projects or programs funded in whole or in part with federal funds.

II. Activities Conducted Abroad

Recipients must ensure that project activities performed outside the United States are coordinated as necessary with appropriate government authorities and that appropriate licenses, permits, or approvals are obtained.

III. Age Discrimination Act of 1975

Recipients must comply with the requirements of the Age Discrimination Act of 1975, Public Law 94-135 (1975) (codified as amended at Title 42, U.S. Code, § 6101 et seq.), which prohibits discrimination on the basis of age in any program or activity receiving federal financial assistance.

IV. Americans with Disabilities Act of 1990

Recipients must comply with the requirements of Titles I, II, and III of the Americans with Disabilities Act, Pub. L. 101-336 (1990) (codified as amended at 42 U.S.C. §§ 12101– 12213), which prohibits recipients from discriminating on the basis of disability in the operation of public entities, public and private transportation systems, places of public accommodation, and certain testing entities.

V. Best Practices for Collection and Use of Personally Identifiable Information

Recipients who collect personally identifiable information (PII) are required to have a publicly available privacy policy that describes standards on the usage and maintenance of the PII they collect. USDHS defines PII as any information that permits the identity of an individual to be directly or indirectly inferred, including any information that is linked or linkable to that individual. Recipients may also find the USDHS Privacy Impact Assessments: Privacy Guidance and Privacy Template as useful resources respectively.

VI. Civil Rights Act of 1964 – Title VI

Recipients must comply with the requirements of Title VI of the Civil Rights Act of 1964 (codified as amended at 42 U.S.C. § 2000d et seq.), which provides that no person in the United States will, on the grounds of race, color, or national origin, be excluded from participation in, be denied the benefits of, or be subjected to discrimination under any program or activity receiving federal financial assistance. USDHS implementing regulations for the Act are found at 6 C.F.R. Part 21 and 44 C.F.R. Part 7.

VII. Civil Rights Act of 1968

Recipients must comply with Title VIII of the Civil Rights Act of 1968, Pub. L. 90-284, as amended through Pub. L. 113-4, which prohibits recipients from discriminating in the sale, rental, financing, and advertising of dwellings, or in the provision of services in connection therewith, on the basis of race, color, national origin, religion, disability, familial status, and sex (see 42 U.S.C. § 3601 et seq.), as implemented by the U.S. Department of Housing and Urban Development at 24 C.F.R. Part 100. The prohibition on disability discrimination includes the requirement that new multifamily housing with four or more dwelling units—i.e., the public and common use areas and individual apartment units (all units in buildings with elevators and ground-floor units in buildings without elevators)—be designed and constructed with certain accessible features. (See 24 C.F.R. Part 100, Subpart D.)

VIII. Copyright

Recipients must affix the applicable copyright notices of 17 U.S.C. §§ 401 or 402 and an acknowledgement of U.S. Government sponsorship (including the award number) to any work first produced under federal financial assistance awards.

IX. Debarment and Suspension

Recipients are subject to the non-procurement debarment and suspension regulations implementing Executive Orders (E.O.) 12549 and 12689, which are at 2 C.F.R. Part 180 as adopted by USDHS at 2 C.F.R. Part 3002. These regulations restrict federal financial assistance awards, subawards, and contracts with certain parties that are debarred, suspended, or otherwise excluded from or ineligible for participation in federal assistance programs or activities.

X. Drug-Free Workplace Regulations

Recipients must comply with drug-free workplace requirements in Subpart B (or Subpart C, if the recipient is an individual) of 2 C.F.R. Part 3001, which adopts the Government-wide implementation (2 C.F.R. Part 182) of Sec. 5152-5158 of the Drug-Free Workplace Act of 1988 (41 U.S.C. §§ 8101-8106).

XI. Duplication of Benefits

Any cost allocable to a particular federal financial assistance award provided for in 2 C.F.R. Part 200, Subpart E may not be charged to other federal financial assistance awards to overcome fund deficiencies; to avoid restrictions imposed by federal statutes, regulations, or federal financial assistance award terms and conditions; or for other reasons. However, these prohibitions would not preclude recipients from shifting costs that are allowable under two or more awards in accordance with existing federal statutes, regulations, or the federal financial assistance award terms and conditions may not be charged to other federal financial assistance awards to overcome fund deficiencies; to avoid restrictions imposed by federal statutes, regulations, or federal financial assistance award terms and conditions; or for other reasons.

XII. Education Amendments of 1972 (Equal Opportunity in Education Act) – Title IX

Recipients must comply with the requirements of Title IX of the Education Amendments of 1972, Pub. L. 92-318 (1972) (codified as amended at 20 U.S.C. § 1681 et seq.), which provide that no person in the United States will, on the basis of sex, be excluded from participation in, be denied the benefits of, or be subjected to discrimination under any educational program or activity receiving federal financial assistance. USDHS implementing regulations are codified at 6 C.F.R. Part 17 and 44 C.F.R. Part 19.

XIII. Energy Policy and Conservation Act

Recipients must comply with the requirements of the Energy Policy and Conservation Act, Pub. L. 94- 163 (1975) (codified as amended at 42 U.S.C. § 6201 et seq.), which contain policies relating to energy efficiency that are defined in the state energy conservation plan issued in compliance with this Act.

XIV. Ensuring the Future is Made in All of America by All of America's Workers

Recipients must comply with the "Build America, Buy America" provisions of the Infrastructure Investment and Jobs Act and E.O. 14005 which provide that, as appropriate and to the extent consistent with law, the recipient must use all practicable means within their authority under a federal award to provide a preference for the purchase, acquisition, or use of goods, products, or materials produced in the United States (including but not limited to iron, aluminum, steel, cement, and other manufactured products.)

XV. False Claims Act and Program Fraud Civil Remedies

Recipients must comply with the requirements of the False Claims Act, 31 U.S.C. §§3729- 3733, which prohibit the submission of false or fraudulent claims for payment to the Federal Government. (See 31 U.S.C. §§ 3801-3812, which details the administrative remedies for false claims and statements made.)

XVI. Federal Debt Status

All recipients are required to be non-delinquent in their repayment of any federal debt. Examples of relevant debt include delinquent payroll and other taxes, audit disallowances, and benefit overpayments. (See OMB Circular A-129.)

XVII. Federal Leadership on Reducing Text Messaging while Driving

Recipients are encouraged to adopt and enforce policies that ban text messaging while driving as described in E.O. 13513, including conducting initiatives described in Section 3(a) of the Order when on official government business or when performing any work for or on behalf of the Federal Government.

XVIII. Fly America Act of 1974

Recipients must comply with Preference for U.S. Flag Air Carriers (air carriers holding certificates under 49 U.S.C.) for international air transportation of people and property to the extent that such service is available, in accordance with the International Air Transportation Fair Competitive Practices Act of 1974, 49 U.S.C. § 40118, and the interpretative guidelines issued by the Comptroller General of the United States in the March 31, 1981, amendment to Comptroller General Decision B-138942.

XIX. Hotel and Motel Fire Safety Act of 1990

Recipients must ensure that all conference, meeting, convention, or training space funded in whole or in part with federal funds complies with the fire prevention and control guidelines of Section 6 of the Hotel and Motel Fire Safety Act of 1990, 15 U.S.C. § 2225a.

XX. John S. McCain National Defense Authorization Act of Fiscal Year 2019

Recipients, sub-recipients, and their contractors and subcontractors are subject to the prohibitions described in section 889 of the John S. McCain National Defense Authorization Act for Fiscal Year 2019, Pub. L. No. 115-232 (2018) and 2 C.F.R. §§ 200.216, 200.327, 200.471, and Appendix II to 2 C.F.R. Part 200. Beginning August 13, 2020, the statute – as it applies to USDHS recipients, sub-recipients, and their contractors and subcontractors – prohibits obligating or expending federal award funds on certain telecommunications and video surveillance products

and contracting with certain entities for national security reasons.

XXI. Limited English Proficiency (Civil Rights Act of 1964, Title VI)

Recipients must comply with Title VI of the Civil Rights Act of 1964, (42 U.S.C. § 2000d et seq.) prohibition against discrimination on the basis of national origin, which requires that recipients of federal financial assistance take reasonable steps to provide meaningful access to persons with limited English proficiency (LEP) to their programs and services. For additional assistance and information regarding language access obligations, please refer to the USDHS Recipient Guidance: https://www.dhs.gov/guidance- published-help- department- supported-organizations-provide-meaningful-access-people-limited and additional resources on http://www.lep.gov.

XXII. Lobbying Prohibitions

Recipients must comply with 31 U.S.C. § 1352, which provides that none of the funds provided under a federal financial assistance award may be expended by the recipient to pay any person to influence, or attempt to influence an officer or employee of any agency, a Member of Congress, an officer or employee of Congress, or an employee of a Member of Congress in connection with any federal action related to a federal award or contract, including any extension, continuation, renewal, amendment, or modification.

XXIII. National Environmental Policy Act

Recipients must comply with the requirements of the National Environmental Policy Act of 1969, (NEPA) Pub. L. 91-190 (1970) (codified as amended at 42 U.S.C. § 4321 et seq. and the Council on Environmental Quality (CEQ) Regulations for Implementing the Procedural Provisions of NEPA, which require recipients to use all practicable means within their authority, and consistent with other essential considerations of national policy, to create and maintain conditions under which people and nature can exist in productive harmony and fulfill the social, economic, and other needs of present and future generations of Americans.

XXIV. Nondiscrimination in Matters Pertaining to Faith-Based Organizations

It is USDHS policy to ensure the equal treatment of faith-based organizations in social service programs administered or supported by USDHS or its component agencies, enabling those organizations to participate in providing important social services to beneficiaries. Recipients must comply with the equal treatment policies and requirements contained in 6 C.F.R. Part 19 and other applicable statues, regulations, and guidance governing the participations of faith-based organizations in individual USDHS programs.

XXV. Non-Supplanting Requirement

Recipients receiving federal financial assistance awards made under programs that prohibit supplanting by law must ensure that federal funds do not replace (supplant) funds that have been budgeted for the same purpose through non-federal sources.

XXVI. Notice of Funding Opportunity Requirements

All the instructions, guidance, limitations, and other conditions set forth in the Notice of Funding Opportunity (NOFO) for this program are incorporated here by reference in the award terms and conditions. All recipients must comply with any such requirements set forth in the program NOFO.

XXVII. Patents and Intellectual Property Rights

Recipients are subject to the Bayh-Dole Act, 35 U.S.C. § 200 et seq, unless otherwise provided by law. Recipients are subject to the specific requirements governing the development, reporting, and disposition of rights to inventions and patents resulting from federal financial assistance awards located at 37 C.F.R. Part 401 and the standard patent rights clause located at 37 C.F.R. § 401.14.

XXVIII. Procurement of Recovered Materials

States, political subdivisions of states, and their contractors must comply with Section 6002 of the Solid Waste Disposal Act, Pub. L. 89-272 (1965), (codified as amended by the Resource Conservation and Recovery Act, 42 U.S.C. § 6962.) The requirements of Section 6002 include procuring only items designated in guidelines of the Environmental Protection Agency (EPA) at 40 C.F.R. Part 247 that contain the highest percentage of recovered materials practicable, consistent with maintaining a satisfactory level of competition.

XXIX. Rehabilitation Act of 1973

Recipients must comply with the requirements of Section 504 of the Rehabilitation Act of 1973, Pub. L. 93-112 (1973), (codified as amended at 29 U.S.C. § 794,) which provides that no otherwise qualified handicapped individuals in the United States will, solely by reason of the handicap, be excluded from participation in, be denied the benefits of, or be subjected to discrimination under any program or activity receiving federal financial assistance.

XXX. Reporting of Matters Related to Recipient Integrity and Performance General Reporting Requirements.

If the total value of any currently active grants, cooperative agreements, and procurement contracts from all federal awarding agencies exceeds $10,000,000 for any period of time during the period of performance of this federal award, then the recipients must comply with the requirements set forth in the government-wide Award Term and Condition for Recipient Integrity and Performance Matters located at 2 C.F.R. Part 200, Appendix XII, the full text of which is incorporated here by reference in the award terms and conditions.

XXXI. Reporting Subawards and Executive Compensation Reporting of first tier subawards.

Recipients are required to comply with the requirements set forth in the government-wide award term on Reporting Subawards and Executive Compensation located at 2 C.F.R. Part 170, Appendix A, the full text of which is incorporated here by reference in the award terms and conditions.

XXXII. SAFECOM

Recipients receiving federal financial assistance awards made under programs that provide emergency communication equipment and its related activities must comply with the SAFECOM Guidance for Emergency Communication Grants, including provisions on technical standards that ensure and enhance interoperable communications.

XXXIII. Terrorist Financing

Recipients must comply with E.O. 13224 and U.S. laws that prohibit transactions with, and the provisions of resources and support to, individuals and organizations associated with terrorism. Recipients are legally responsible to ensure compliance with the Order and laws.

XXXIV. Trafficking Victims Protection Act of 2000 (TVPA) Trafficking in Persons.

Recipients must comply with the requirements of the government-wide financial assistance award term which implements Section 106 (g) of the Trafficking Victims Protection Act of 2000 (TVPA), codified as amended at 22 U.S.C. § 7104. The award term is located at 2 C.F.R. § 175.15,

the full text of which is incorporated here by reference.

XXXV. Universal Identifier and System of Award Management

Requirements for System for Award Management and Unique Entity Identifier Recipients are required to comply with the requirements set forth in the government-wide financial assistance award term regarding the System for Award Management and Universal Identifier Requirements located at 2 C.F.R. Part 25, Appendix A, the full text of which is incorporated here by reference.

XXXVI. USA PATRIOT Act of 2001

Recipients must comply with requirements of Section 817 of the Uniting and Strengthening America by Providing Appropriate Tools Required to Intercept and Obstruct Terrorism Act of 2001 (USA PATRIOT Act), which amends 18 U.S.C. §§ 175–175c.

XXXVII. Use of USDHS Seal, Logo and Flags

Recipients must obtain permission from their USDHS FAO prior to using the USDHS seal(s), logos, crests or reproductions of flags or likenesses of USDHS agency officials, including use of the United States Coast Guard seal, logo, crests or reproductions of flags or likenesses of Coast Guard officials.

XXXVIII. Whistleblower Protection Act

Recipients must comply with the statutory requirements for whistleblower protections (if applicable) at 10 U.S.C § 2409, 41 U.S.C. § 4712, and 10 U.S.C. § 2324, 41 U.S.C. §§ 4304 and 4310.

The remainder of this page is intentionally left blank.

ATTACHMENT 2
Reimbursement Checklist

DHSEM reserves the right to update this check list throughout the life of the grant to ensure compliance with applicable federal and state rules and regulations. ***Please only check the categories that apply to the reimbursement you are currently requesting.***

EQUIPMENT

- ☐ Have all invoices been included?
- ☐ Has AEL # been identified for each purchase?
- ☐ If service/warranty expenses are listed, are they only for the performance period of the grant?
- ☐ Has proof of payment been included? (e.g., canceled check, Electronic Funds Transfer (EFT) confirmation, or P-Card back up documentation which will include receipt with vendor, copy of credit card statement showing expense charged, and payment to credit card Company for that statement)

CONSULTANTS/CONTRACTORS

- ☐ Does the amount billed by consultant add up correctly?
- ☐ Has all appropriate documentation to denote hours worked been properly signed?
- ☐ Have copies of all planning materials and work product (e.g., meeting documents, copies of plans) been included? (If a meeting was held by recipient or contractor/consultant of recipient, an agenda and signup sheet with meeting date must be included).
- ☐ Has the invoice from consultant/contractor been included?
- ☐ Has proof of payment been included? (e.g., canceled check, Electronic Funds Transfer (EFT) confirmation, or P-Card back up documentation which will include receipt with vendor, copy of credit card statement showing expense charged, and payment to credit card Company for that statement).

SALARY POSITIONS (Note: this applies to positions billed under M&A)

- ☐ Have the following been provided: signed time sheet by employee and supervisor and proof that employee was paid for time worked (statement of earnings, copy of payroll check or payroll register)?
- ☐ Has a time period summary sheet been included for total claimed amount?
- ☐ Has a general ledger payroll report been included for total claimed amount? Ensure this report includes both employee and employer payroll information (i.e., benefits/contributions).
- ☐ Does the back-up documentation include a copy of the check stub per employee for the time period covered?
- ☐ Does the back-up documentation provided match the time period for which reimbursement is being requested?

OTHER:

- ☐ If EHP form needed – has copy of it and approval from USDHS/FEMA been included?

MATCHING FUNDS (IF APPLICABLE)

- ☐ Contributions are from Non-Federal funding sources.
- ☐ Contributions are from cash or in-kind contributions which may include training investments.
- ☐ Contributions are not from salary, overtime, or other operational costs unrelated to training.

This page is intentionally left blank.

ATTACHMENT 3
Glossary and Definitions

Applicant: When an entity applies for PA funding, it is the **Applicant**. Once the Applicant receives funding, it is either the **recipient, pass-through entity,** or a **sub-recipient**.

Authorized Equipment List (AEL): The Authorized Equipment List (AEL) is a list of approved equipment types allowed under FEMA's preparedness grant programs.

Backfill: The act of filling a position left by another employee who has been moved to another role.

Cost Match: Recipient or sub-recipient contribution. This can be cash (hard match) or third party in-kind (soft match). 2 C.F.R. 200.306.

Cost Sharing or Matching: The portion of project costs not paid by federal funds or contributions (unless otherwise authorized by federal statute). 2 C.F.R. 200.1 Cost sharing or matching.

Declared fire: An uncontrolled fire or fire complex, threatening such destruction as would constitute a major disaster, which the FEMA Regional Administrator has approved in response to a state's request for a fire management assistance declaration and in accordance with the criteria listed in 44 C.F.R. 204.21. Fire Management Assistance Declaration Criteria.

Disallowed costs: Those charges to a federal award that the federal awarding agency or pass-through entity determines to be unallowable, in accordance with the applicable federal statutes, regulations, or the terms and conditions of the federal award. 2 C.F.R. 200.1 Disallowed costs.

Demobilization: The process and procedures for deactivating, disassembling, and transporting back to their point of origin all resources that had been provided to respond to and support a declared fire.

Disaster: An emergency condition affecting all or part the state, overwhelming local resources, in which there is likely to be a significant recovery period. The Governor may request a Robert T. Stafford Act (Stafford Act) Disaster Declaration through FEMA, asking for the Public Assistance Program, Fire Management Assistance Program, Individual Assistance Program and Mitigation based upon known and estimated damage assessment data.

Disaster Recovery Reform Act of 2018 (DRRA): The DRRA represents the most comprehensive Emergency Management reform since the Post-Katrina Emergency Management Reform Act in 2006. It includes a larger and more reliable funding stream for pre-disaster mitigation, expanded assistance for individuals and households, and support for states, localities, tribes, and territories (SLTTs) to develop their own emergency management capabilities.

Emergency: A condition in which local and state emergency response agencies are overwhelmed by an incident to the point that federal assistance is needed. Unlike a disaster, an emergency does not have a recovery phase. The Governor may request a Stafford Act Emergency Declaration through FEMA, asking for the Public Assistance Program and/or Fire Management Assistance Grant.

Emergency Work: Work which must be done before, during and immediately after a disaster event to save lives and to protect improved property and public health and safety or to avert or lessen the threat of a major disaster. The FEMA Public Assistance emergency work Categories are:

- Category A (Debris Removal)
- Category B (Emergency Protective Measures)

Equipment: Tangible personal property (including information technology systems) having a useful life of more than one year and a per-unit acquisition cost which equals or exceeds the lesser of the capitalization level established by the non-federal entity for financial statement purposes, or $5,000. 2 C.F.R. 200.1 Equipment.

*Expenditures***:** Charges made by a non-federal entity to a project or program for which a federal award was received. 2 C.F.R. 200.1 Expenditures.

Federal Award: The federal financial assistance that a recipient receives directly from a federal awarding agency or indirectly from a pass-through entity. 2 C.F.R. 200.1 Federal award.

Federal Emergency Management Agency (FEMA): The federal agency responsible for coordinating disaster recovery efforts in partnership with state, local, and tribal governments.

Federal Share: The portion of the federal award costs that are paid using federal funds. 2 C.F.R. 200.1 Federal share.

FEMA/State Agreement: A formal, legal document between FEMA and the state or a tribal government giving the understandings, commitments, terms, conditions, and timelines for assistance resulting from a federal disaster, emergency, or fire declaration, declared by the President.

Governor's Authorized Representative (GAR): The person designated by the Governor to execute all necessary documents for disaster assistance programs on behalf of the state and local grant recipients. The GAR is responsible for state compliance with the FEMA/State Agreement. The GAR may also be designated as the State Coordinating Officer.

Hazard Mitigation: Mitigation is the effort to reduce loss of life and property by lessening the impact of disasters.

Hazard Mitigation (Sections 404 and 406): Section 406 Mitigation measures are specific to the mechanism of the declared disaster and are an integral part of the reconstructed work on a facility or will protect or benefit the repaired portion of the facility. These are different from mitigation measures that are considered for eligibility under the Hazard Mitigation Grant Program (HMGP) of Section 404 of the Stafford Act. In the HMGP program, measures are proposed that may involve facilities other than those damaged by the disaster, new facilities, or even non-structural measures such as the development of floodplain management regulations.

Incident Period: The time interval during which the declared disaster occurs. The Regional Administrator, in consultation with the Governor's Authorized Representative and the Principal Advisor will establish the incident period. Generally, costs must be incurred during the incident period to be considered eligible.

The declaration designates the incident period. The incident period is the span of time during which the federally declared incident occurs. This period varies in length, depending on the incident.

Improved Project: When performing restoration work on a damaged facility, a sub-recipient may use the opportunity to make improvements to the facility. Projects that incorporate such improvements are improved projects. The improved facility must have the same function and at least the equivalent capacity as that of the pre-disaster facility. Federal funding for improved projects is limited to the lesser of the following: the federal share of the approved estimated costs to restore the damaged facility to its pre-disaster design and function or the federal share of the actual cost of completing the improved project. The sub-recipient must obtain FEMA approval, via the NMDHSEM, for an improved project prior to

construction.

Indirect Costs: Costs a recipient or sub-recipient incurs for a common or joint purpose benefitting more than one cost objective that are not readily assignable to the cost objectives specifically benefited.

Joint Field Office (JFO): A temporary facility established in or near a declared disaster area to serve as the field headquarters for FEMA, other federal and state recovery personnel, and serve as the focal point for federal disaster operations, direction, coordination, and information.

Large Project: An approved project estimated to cost the same as or more than the large project threshold amount. The large project threshold is a dollar amount adjusted annually to reflect changes in the Consumer Price Index for all urban consumers. The large project threshold amount, applicable to all projects, is the amount in effect on the declaration date of the disaster, regardless of when project approval is made or when the work is performed.

Management Costs: Management costs are any indirect costs, any direct administrative costs, and any other administrative expenses associated with the administration of HMA awards and subawards. Management costs are provided under HMGP, HMGP Post Fire, BRIC and FMA. For the Hazard Mitigation Grant Program (HMGP) and Hazard Mitigation Grant Program Post Fire (HMGP Post Fire), recipients will be reimbursed no more than 15% of the total amount of the award, of which not more than 10% may be used by the recipient and 5% by the subrecipient. Under HMGP and HMGP Post Fire, recipients' Administrative Plans must include procedures for monitoring and reporting on subrecipient management costs before receiving funding for management costs. For Building Resilient Infrastructure and Communities (BRIC) and Flood Mitigation Assistance (FMA), recipients may apply for a maximum of 10% of the total funds requested in their application cost estimate (federal and non-federal shares) for management costs to support the sub-applications included as part of their award. Subapplicants for BRIC and FMA may apply for a maximum of 5% of the total funds requested in a sub-application for management costs. Additional information is available in FEMA Policy #104-11-1, Hazard Mitigation Grant Program Management Costs (Interim).

Pass-through Entity: A non-federal entity that provides a subaward to a sub-recipient to carry out part of a federal program. 2 C.F.R. 200.1 Pass through entity (PTE).

Performance Period for Hazard Mitigation Assistance: The period of time stipulated in the Sub-recipient Grant Agreement, as amended, during which the sub-recipient must finish the approved work. Projects completed after the active Period of Performance deadline will be considered ineligible.

Quarterly Financial Progress Report: The information in this report is used by NMDHSEM to monitor sub-recipient cash flow, performance, and project implementation to ensure proper use of federal funds.

Recipient: Formally referred to as the grantee or sub-grantee or applicant. Federally Recognized Indian Tribal Governments may also be Recipients if they so desire and if they meet FEMA requirements.

Recovery Officer: Aids in the administration of disaster recovery grant programs for statewide disasters and emergencies. Coordinates and co-administers disaster recovery grant programs, ensuring that they are implemented and carried out according to state and federal program requirements.

Recovery Unit: This is the unit within the NMDHSEM Response and Recovery Bureau designated as responsible for the programmatic administration of the FEMA PA and FMAG Programs.

Recovery Unit Manager: Responsible for administering and supervising staff responsible for federal and state disaster recovery programs and serves as the Deputy State Coordinating Officer (SCO) for

emergencies or major disaster declarations.

Response & Recovery Bureau Chief: Responsible for supervising staff responsible for federal and state disaster recovery programs and staff that provides operational response capabilities to support the citizens of New Mexico. This position also serves as State Coordinating Officer (SCO) for emergencies or major disaster declarations.

Request for Approval Form: Used by sub-recipient to request approval from NMDHSEM to expend funds for previously identified and approved projects. Approval must be received prior to expenditure.

Small Project: An approved project estimated to cost less than the large project threshold amount.

State Coordinating Officer (SCO): The person designated by the Governor to coordinate state and local disaster assistance efforts with those of the federal government. The GAR may also be the SCO. The Governor will name the GAR and the SCO in the FEMA/State Agreement.

Sub-recipient: Formally referred to as the sub-grantee or applicant, is a state agency, local government, tribal government, other legal governmental entity, or a private non-profit (PNP) organization that receives a sub-grant award and which is accountable to the state for the use of the funds provided. The FEMA reserves the final decision as to sub-recipient eligibility.

Supplanting: When a state or unit of local government reduces state or local funds for an activity specifically because federal funds are available (or expected to be available) to fund that same activity. When supplanting is not permitted, federal funds must be used to **supplement** existing state or local funds for program activities and may not replace state or local funds that have been appropriated or allocated for the same purpose. Additionally, federal funding may not replace state or local funding that is required by law. If a question of supplanting arises, the sub-recipient or grantee will be required to substantiate that the reduction in non-federal resources occurred for reasons other than the receipt or expected receipt of federal funds. US Department of Justice Office of Justice Programs, Grants 101.

The remainder of this page is intentionally left blank.

ATTACHMENT 4
Acronyms

AEL: Authorized Equipment List
AGAR: Alternate Governor's Authorized Representative
ASB: Administrative Services Bureau of NMDHSEM
CFDA: Catalog of Federal Domestic Assistance
DAC: Direct Administrative Costs
DOT: Department of Transportation
DPS: Department of Public Safety
DRRA: Disaster Recovery Refo1m Act of 2018
DSCO: Deputy State Coordinating Officer
DSIBD: Deputy State Infrastructure Branch Director
DSPAGS: Deputy State Public Assistance Group Supervisor
EMAC: Emergency Management Assistance Compact
EMMIE: Emergency Management Mission Integrated Environment
EMNRD: Energy, Minerals and Natural Resources Department
FEMA: Federal Emergency Management Agency
FFATA- Federal Funding Accountability and Transparency Act
FMAG - Fire Management Assistance Grant
GAR: Governor's Authorized Representative
IMAS: Intrastate Mutual Aid System
INF: Immediate Needs Funding
IOF: Initial Operating Facility
JFO: Joint Field Office
NSPO: Net Small Project Overrun
NMDHSEM: New Mexico Department of Homeland Security and Emergency Management
ONA: Other Needs Assistance
OMB: Office of Management and Budget
PA: Public Assistance
PAGS: Public Assistance Group Supervisor
PAPPG: Public Assistance Program and Policy Guide
PDA: Preliminary Damage Assessment
PDMG: Program Delivery Manager
PIO: Public Information Officer
PNP: Private Non-Profit
POP: Period of Performance
PW: Project Worksheet
R&R: Response & Recovery Bureau
REC: Record of Environmental Consideration
RO: Recovery Officer
RP A - Request for Public Assistance
SCO: State Coordinating Officer
SOW: Scope of Work
SHARE: New Mexico Statewide Human Resources, Accounting, and Management Reporting System

SIBD: State Infrastructure Branch Director
SPAGS: State Public Assistance Group Supervisor
SPAO: State Public Assistance Officer
USDHS: United States Department of Homeland Security
USFS: US Forest Service
VFO: Virtual Field Office

The remainder of this page is intentionally left blank.

2022_BRIC_SGA_Microgrids

Final Audit Report 2024-10-02

Created:	2024-10-02
By:	JULIE KENNY (jckenny@santafenm.gov)
Status:	Signed
Transaction ID:	CBJCHBCAABAA4ur7POMV7qg5nM4bzGJm61gZ4-za95Q5

"2022_BRIC_SGA_Microgrids" History

Document created by JULIE KENNY (jckenny@santafenm.gov)
2024-10-02 - 3:03:06 PM GMT- IP address: 63.232.20.2

Document emailed to Rebecca Mnuk-Herrmann (ramnukherrmann@santafenm.gov) for signature
2024-10-02 - 3:04:08 PM GMT

Email viewed by Rebecca Mnuk-Herrmann (ramnukherrmann@santafenm.gov)
2024-10-02 - 3:40:34 PM GMT- IP address: 104.47.65.254

Document e-signed by Rebecca Mnuk-Herrmann (ramnukherrmann@santafenm.gov)
Signature Date: 2024-10-02 - 3:41:47 PM GMT - Time Source: server- IP address: 63.232.20.2

Agreement completed.
2024-10-02 - 3:41:47 PM GMT

Powered by Adobe Acrobat Sign

City of Santa Fe New Mexico

Finance Department

Project Ledger Request Form

Date of Request: 10/22/2024 UPDATED 10/22/24-CT

Project Title: Critical Infrastructure Microgrids Scoping

Project Type: ☑ CIP ☑ Grant ☐ Internal Tracking

Project ID: PWD2531532

Grant ID: F2511

Approved By: Erika Lujan Erika Lujan (Oct 30, 2024 07:57 MDT)

PL/CT (Finance Use Only)

Department: Public Works Project Manager: Regina Wheeler /HC Ext: 6622

Project Date Range: 02/14/2024 to 2/14/2027 ☑ Create Fixed Asset

---

☑ Multi-Funding (complete all funding sources, should equal 100%)

Funding Source: Dept of Homeland Security & Emergency Management % of Funding: 76%

MUNIS ORG: 3159981/2212850 MUNIS OBJ: 490580 Awarded Amount: $375,025/$24,966

Funding Source: 1/2% GRT for PW Infrastructure % of Funding: 24%

MUNIS ORG: 3650416 MUNIS OBJ: 572970 Awarded Amount: $125,008

Expense String Phase:

A project must have at least one phase identified, this can be used as an additional level of tracking, for example, CIP - Design, Construction, etc. For Grants can be used as reimbursable types, such as transportation, salaries.

(You can create more than one phase and you can default MUNIS ORGs and OBJs, optional)

Phase: Subrecipient Management MUNIS ORG: 2122850 MUNIS OBJ: 510300

CONSTRUCTION-3159981.572970

Grants Only (list all grants if applicable):

Grantor Name: EMT-2022-BR-001-BRIC Awarded Amount: 399990.75

AR Charge Code: 3159981/22122850.490580 ☐ Grant funds multiple projects (Complete a form for each project)

Grantor Id: _____ Federal CFDA (if applicable): 97.047

Grantor Name: _____ Awarded Amount: _____

AR Charge Code: _____ ☐ Grant funds multiple projects (Complete a form for each project)

Grantor Id: _____ Federal CFDA (if applicable): _____

(If grants please provide all grant award documents with form) [X] Attached Grant Documentation

BRIC_2022_Microgrids_CouncilPacket_2024-

Final Audit Report 2024-11-01

Created:	2024-10-31
By:	Justin Gonzales (jmgonzales@santafenm.gov)
Status:	Signed
Transaction ID:	CBJCHBCAABAAP4PIJVIFKOZxOuCeWtlegRo5tw0faBhp

"BRIC_2022_Microgrids_CouncilPacket_2024-" History

Document created by Justin Gonzales (jmgonzales@santafenm.gov)
2024-10-31 - 8:31:48 PM GMT- IP address: 63.232.20.2

Document emailed to ajhopkins@santafenm.gov ajhopkins@santafenm.gov (ajhopkins@santafenm.gov) for signature
2024-10-31 - 8:34:32 PM GMT

Email viewed by ajhopkins@santafenm.gov ajhopkins@santafenm.gov (ajhopkins@santafenm.gov)
2024-10-31 - 11:17:13 PM GMT- IP address: 104.47.65.254

Document e-signed by ajhopkins@santafenm.gov ajhopkins@santafenm.gov (ajhopkins@santafenm.gov)
Signature Date: 2024-10-31 - 11:17:50 PM GMT - Time Source: server- IP address: 63.232.20.2

Document emailed to EMILY OSTER (ekoster@santafenm.gov) for signature
2024-10-31 - 11:17:52 PM GMT

Email viewed by EMILY OSTER (ekoster@santafenm.gov)
2024-11-01 - 5:28:47 PM GMT- IP address: 104.47.65.254

Document e-signed by EMILY OSTER (ekoster@santafenm.gov)
Signature Date: 2024-11-01 - 5:40:33 PM GMT - Time Source: server- IP address: 63.232.20.2

Agreement completed.
2024-11-01 - 5:40:33 PM GMT

Powered by Adobe Acrobat Sign

CITY OF SANTA FE

Date: October 21, 2024

To: Governing Body

Via: Regina Wheeler, Public Works Director RW (Oct 31, 2024 11:08 MDT)
Henri Hammond-Paul, Community Health and Safety Director HENRI HAMMOND-PAUL (Oct 31, 2024 11:26 MDT)

From: **Brian Williams, Office of Emergency Management Director** BRIAN WILLIAMS (Oct 30, 2024 11:03 MDT)

Subject: **Building Resilient Infrastructure in Communities (BRIC) Grant Approval – Cerillos Road Stormwater Infiltration at Ashbaugh Park**

ITEM AND ISSUE:
Request Approval of the 2022 FEMA Building Resilient Infrastructure in Communities (BRIC) Sub-Grant Agreement EMT-2022-BR-0002 in the Total Amount of $709,122.47 with the New Mexico Department of Homeland Security and Emergency Management to Design Flood Mitigation Solutions at Ashbaugh Park. Brian Williams, Director Office of Emergency Management, bgwilliams@santafenm.gov, 505-469-1484.

Request approval of FY25 Budget Adjustment Resolution (BAR) to Budget $506,576.60 in Awarded Grant Funds into Stormwater WIP Design, 168,858.87 in Matching Funds from the Stormwater Utility Service Fee to Stormwater WIP Design, and $33,687.00 in Grant Funds for Subrecipient Management Costs into Emergency Management Professional Contracts.

Action Requested: Grant Approval; BAR Approval

BACKGROUND AND SUMMARY:
The City of Santa Fe applied for this reimbursable grant through the United States Department of Homeland Security and Emergency Management (DHSEM) and the Federal Emergency Management Agency (FEMA). Building Resilient Infrastructure and Communities (BRIC) supports states, local communities, tribes and territories as they undertake hazard mitigation projects, reducing the risks they face from disasters and natural hazards.

The Office of Emergency Management and the Parks and Open Space Division have secured a grant to design innovative flood mitigation solutions at Ashbaugh Park. To reduce flooding of the Cerrillos Rd corridor, the project will divert flows from Cerrillos Road to an infiltration facility located within Ashbaugh Park. By promoting infiltration and passive reuse, this project is intended to alleviate stress on existing stormwater infrastructure, conserve water resources, improve water quality, and reduce impacts of flooding on downstream neighbors. The design will also incorporate community amenities like a refreshed frisbee golf course, outdoor classroom, and walking paths, maximizing benefits for both the environment and the public.

This Building Resilient Infrastructure in Communities (BRIC) Grant provides a 75% federal share of $506,576.60 and requires 25% local share of $168.858.87. The grant amount includes a 100% federally

funded Subrecipient Management Costs $33,687.00 to assist with capacity in managing the grant. The Office of Emergency Management will manage the grant, while the Parks and Open Space Division will manage the project.

The term of the grant ends on February 14, 2027.

PROCUREMENT METHOD:
Not applicable. Grant approval only.

Supporting Information:

CONTRACT NUMBER:

The FY25 Project ledger number is OEM2523103

SOURCE/REVENUE: ☐Expense ☒Revenue

The funding source is:

Federal Share (not including sub-recipient management costs):
Fund Name/Number: Stormwater Utility Fee/ 231
Munis Org Name/Number: Stormwater/2310411
Munis Object Name/Number: Fed Grant (FEMA)/490580

The Federal funding source (sub-recipient management costs only) is:
Fund Name/Number: Emergency Services/Fund 221
Munis Org Name/Number: Emergency Management/2212850
Munis Object Name/Number: Fed Grant (FEMA)/490580

Local Share
Fund Name/Number: Stormwater Utility Fee/ 231
Munis Org Name/Number: Stormwater/2310411

If the project is grant funded? List grant award number*: EMT-2022-BR-0002*

Grant Manager / Accounting Officer Approval: Matthew Bonifer Matthew Bonifer (Oct 31, 2024 15:48 MDT) **Date:** 10/31/2024
Comment/Exceptions: _____

Project Ledger #: _____

Budget Officer Approval: Andy Hopkins **Date:** 10/31/2024
Comment/Exceptions: _____

CAPITAL ASSET (will this procurement result in a tangible item that costs more than $5,000?):

☐Yes | ☒ No

 # (if known): _____

Repair or Replacement of Existing Equipment:

☐Yes | ☒ No
If yes -> ☐Repair | ☐ Replacement

Please explain: _____

Capital Project:
(New and improvement projects that are going to cost $10,000 or more)
☐ Yes | ☒ No

Project Ledger #: OEM2523103 _____

Anticipated length of project: 2.5 Years _____

Asset Manager Approval: _____ **Date:** _____
Comment/Exceptions: _____

Department Approvals:
IT Components: ☐ **Yes | ☒ No**
Vehicles: ☐ **Yes | ☒ No**
Facilities, Furniture, Fixtures, Equipment: ☐ **Yes | ☒ No**

Approval: _____ **Title:** _____ **Date**: _____
Approval: _____ **Title:** _____ **Date**: _____
Comment & Exceptions: _____

Department Contract Administrator Contact Info:
Justin Gonzles, jmgonzales@santafenm.gov

ATTACHMENTS:

1. Sub-Recipient Grant Agreement
2. Budget Amendment Resolution
3. Project Ledger

Log # *{Finance use only}*:	
Journal # *{Finance use only}*:	

City of Santa Fe, New Mexico
BUDGET AMENDMENT RESOLUTION (BAR)

DEPARTMENT / DIVISION NAME	DATE
Public Works / Stormwater CIP	9/9/2024

ITEM DESCRIPTION	ORG	OBJECT	PROJECT	INCREASE	DECREASE
EXPENDITURES				*{enter as positive #}*	*{enter as negative #}*
WIP DESIGN - Cerrillos Rd Stormwater at Ashbaugh Park	2310411	572960	OEM2523103-Design	675,436	
PROFESSIONAL CONTRACTS	2212850	510300	OEM2523103-ContrSvc	33,687	
REVENUES				*{enter as negative #}*	*{enter as positive #}*
FEMA - Cerrillos Rd Stormwater at Ashbaugh Park	2310411	490580	OEM2523103	(506,577)	
Federal Emergency Management Agency (GRANT)	2212850	490580	OEM2523103	(33,687)	
				$ 168,859.00	$ -

JUSTIFICATION: *(use additional page if needed)*
--Attach supporting documentation/memo

FY 25 budget increase for sub-recipient grant award from Department of Homeland Security BRIC for Cerrillos Road Stormwater Infiltration at Ashbaugh Park in the amount of $506,577 for Design; $33,687 for Management costs; and a $168,859 local match from Stormwater fund balance. (Expires 02/14/2027)

This grant will fund the design of large-scale stormwater infiltration at Ashbaugh Park to reduce flooding risk to downstream residents from excess runoff from the Cerrillos Rd corridor.

{Complete section below if BAR results in a net change to ANY Fund}

Fund(s) Affected	Fund Balance Increase/(Decrease)
231	(168,859)
TOTAL:	**(168,859)**

Kyle Morgan — 10/21/2024
Prepared By *{print name}* — Date

Division Director Signature *{optional}* — Date

HENRI HAMMOND-PAUL (Oct 31, 2024 11:26 MDT) — 10/31/2024
Department Director Signature — Date

{Use this form for Finance Committee/ City Council agenda items ONLY}

CITY COUNCIL APPROVAL

City Council Approval Date

Agenda Item #:

Andy Hopkins — 10/31/2024
Budget Officer — Date

Finance Director *{≤ $5,000}* — Date

City Manager *{≤ $60,000}* — Date

State of New Mexico
DEPARTMENT OF HOMELAND SECURITY & EMERGENCY MANAGEMENT
P.O. Box 27111
Santa Fe, NM 87502

SUB-RECIPIENT GRANT AGREEMENT

FY22 Building Resilient Infrastructure and Communities (BRIC)

Federal Grant No.: EMT-2022-BR-0002: Assistance Listing 97.047

1. SUB-GRANT NO.	2. SUB-RECIPIENT NAME	3. PROJECT NAME	
EMT-2022-BR-0002	City of Santa Fe	Cerrillos Rd Stormwater Infiltration at Ashbaugh Park	
4. STATE DFA VENDOR NUMBER	**5. EIN NUMBER**	**6. SAM UEI NUMBER**	**7. CAGE CODE**
54360	856000168	QLN2YKMMJ8X6	4C987
8. SUB-RECIPIENT PHYSICAL ADDRESS	**9. SUB-RECIPIENT REMIT ADDRESS**		
200 Lincoln Ave. Santa Fe, NM 87504	200 Lincoln Ave. Santa Fe, NM 87504		
10. DHSEM CONTACT NAME:	**11. CONTACT DESK PHONE:**	225-313-1774	
Natalie West			
	CONTACT EMAIL ADDRESS:	DHSEM.mitigation@dhsem.nm.gov cc: natalie.west@dhsem.nm.gov	
12a. PERFORMANCE PERIOD START DATE	2/15/2024	**12b. PERFORMANCE PERIOD END DATE**	2/14/2027
13. TOTAL AWARD AMOUNT:	$709,122.47		
13a. FEDERAL SHARE	**13b. LOCAL SHARE**	**13c. STATE SHARE**	
$540,263.60	$168,858.87	$0.00	

	14a. NAME OF PROJECT AWARD	14b. FEDERAL SHARE	14c. NON-FEDERAL SHARE
1	Contractual	$506,576.60	$168,858.87
2	Subrecipient Management Costs	$33,687.00	$
3		$	$
4		$	$
5		$	$
6		$	$

TOTAL AMOUNT OF PROJECT	**$540,263.60**	**$168,858.87**

WHEREAS The State of New Mexico will serve as the "pass-through entity" with respect to the State's role in providing sub-awards and administering grant assistance provided to sub-recipients and may, subject to a Memorandum of Agreement, directly support project development and administration.

WHEREAS funding has been obligated from the Federal Emergency Management Agency pursuant to a request by the applicant, The Sub-Recipient, City of Santa Fe.

NOW, THEREFORE, it is mutually understood and agreed between the recipient NMDHSEM, and **City of Santa Fe,** hereinafter referred to as "sub-recipient," as follows:

ARTICLE 1: REQUIREMENTS AND ASSURANCES

A. The sub-recipient hereby agrees that the performance period for the grant identified on Page 1, Box 1. is consistent with the performance period identified on Page 1, Box 12a. and 12b. This Sub-recipient Grant Agreement, as amended, shall remain open for administrative purposes if necessary to achieve final payment and financial reconciliation.

B. The sub-recipient hereby agrees that the sub-recipient official signing this Sub-recipient Grant Agreement certifies that all financial expenditures, including all supporting documents submitted for reimbursement, have been incurred by the sub-recipient and are eligible and allowable expenditures consistent with the guidelines for this award. The sub-recipient agrees to follow reasonable professional standards in all financial management and bookkeeping procedures necessary to carry out this agreement.

C. The sub-recipient hereby agrees that no member, officer, or employee of the sub-recipient organization, or its designees or agents, no member of the governing body of the locality in which the program is situated, and no other public official of such locality or localities who exercises any functions or responsibilities with respect to the program during his or her tenure or for one year after that, shall have any interest, direct or indirect, in any contract or subcontract, or the process thereof, for work to be performed in connection with this Sub-recipient Grant Agreement; the sub-recipient shall incorporate in all such contracts a provision prohibiting such interest pursuant to the purposes of this Sub-recipient Grant Agreement.

D. The sub-recipient hereby agrees that it understands and agrees that it cannot use any federal funds, either directly or indirectly, in support of the enactment, repeal, modification, or adoption of any law, regulation, or policy, at any level of government, without the express written approval of the State of New Mexico or FEMA.

E. The sub-recipient hereby agrees that FEMA reserves a royalty-free, non-exclusive, and irrevocable license to reproduce, publish, or otherwise use and authorize others to use, for federal government purposes: (1) the copyright in any work developed under this Sub-recipient Grant Agreement; and (2) any rights of copyright to which the sub-recipient purchases ownership with federal support. The sub-recipient agrees to consult with FEMA through NMDHSEM regarding allocating any patent rights that arise from or are purchased with this funding.

F. The sub-recipient hereby agrees that signatures of the sub-recipient officials on this Sub-recipient Grant Agreement attest to the sub-recipient's understanding, acceptance, and compliance with

Lobbying, Debarment, Suspension, and Other Responsibility Matters; Drug- free Workplace; Conflict of Interest, and Non-Supplanting certifications. Federal funds will not be used to supplant state or local funds. Federal funds will be used to supplement existing sub-recipient funding to augment program activities and not replace those funds which have been appropriated in the budget for the same purpose.

G. The sub-recipient hereby agrees that their accounting system allows for the separation of fund sources. Funding provided under this Sub-recipient Grant Agreement cannot be commingled with funds from other federal, state, or local agencies, and each project must be accounted for separately.

H. The sub-recipient hereby agrees that it shall comply with applicable Federal Civil Rights Laws and Regulations: Title VI of the Civil Rights Act of 1964, Section 504 of the Rehabilitation Act of 1973, Title IX of the Education Amendments of 1972, Age Discrimination Act of 1975, and Americans with Disabilities Act of 1991. The sub-recipient will take reasonable steps to ensure Limited English Proficient (LEP) persons have meaningful access to its programs and activities. Executive Order 13379 Individuals with Disabilities in Emergency Preparedness, requires the government to support safety and security for individuals with disabilities in situations involving disasters, including earthquakes, tornadoes, fires, floods, hurricanes, and acts of terrorism.

I. The sub-recipient hereby certifies that for its employees, it has an Affirmative Action Plan/Equal Employment Opportunity Plan (EEOP) if not exempted by the Federal Government or New Mexico rule or statute. An EEOP is not required for sub-recipients of less than $25,000 or fewer than 50 employees.

J. The sub-recipient hereby certifies that its employees are eligible to work in the United States as verified by Form I–9, Immigration & Naturalization Service Employment Eligibility.

K. The sub-recipient hereby agrees that it is the responsibility of the sub-recipient to fully understand and comply with the requirements of the following, where such requirements apply to the sub-recipient set forth in:

1. 2 C.F.R. § 200: Code of Federal Regulations
2. 44 C.F.R. parts 7, 9, 10, 13, 14, 17, 18, 25, 206, 220, 221, 44 C.F.R. Part 209, 2 C.F.R. Part 200 and any other applicable FEMA policy memoranda and guidance documents
3. FEMA Hazard Mitigation Assistance Program and Policy Guide
4. New Mexico State Procurement Code
   New Mexico Administrative Code Title 2 – Public Finance https://www.srca.nm.gov/nmac-home/nmac-titles/title-2-public-finance/

ARTICLE 2: REIMBURSEMENT OF FUNDS

The NMDHSEM will apply the following procedures for making payments to sub-recipients:

A. Payment of Funds, General: Once FEMA has obligated funds and NMDHSEM has budgeted and encumbered those funds, the Cabinet Secretary is authorized to advance funds, as permissible, and to consider requests for payments for progress and completion based on proper review and approvals, in accordance with the sub-grant agreement or amendment as described below. Review and audit of expending and accounting of federal awards and state funds will be conducted to ensure records, reports, and documentation for compliance and tracing of funds are accounted for; 2 C.F.R. §§ 200.302(b)(6), 200.305(a). The State Department of Finance and Administration (DFA) may require additional supporting data and documents prior to disbursement of funds.

B. Reimbursement shall be based upon authorized and allowable expenditures consistent with the project narrative, grant guidelines, and timely submission of Financial and Performance Progress Reports. Reimbursement of expenditures shall be requested quarterly or monthly if need be for expenditures within the performance period. A minimum of 25% (of the total project cost) in the non-federal match must be included on each request for reimbursement. All expenditures must be supported with source documentation (e.g., copies of proof of payment, invoices, receipts, timesheets with name/rate/hours and certified, breakdown of expenditures based on FEMA approved budget, warrants, a brief description of work done, required deliverables, etc.). Request for reimbursement will not be processed if quarterly financial or performance reports are delinquent. The final payment of 15% will not be made until DHSEM verifies that all activities are complete. All payments shall be made on an actual cost reimbursement basis.

C. Contracts: All requests for proposals/bids, sole–source procurements, single vendor responses to a competitive bid, and contracts require DHSEM pre–approval prior to implementation. The relevant contract must accompany requests for reimbursement for contractual services.

D. Local Match: Local matching funds must clearly support the source, the amount, and the timing of all matching contributions. When requesting reimbursement, the match percentage must be shown on each invoice. Copies of proof of payment, invoices, receipts, purchase orders, timesheets with name/wage/hours, cost allocation, general ledger, warrants, etc., must be submitted as a backup for the match.

E. Non-reimbursable Expenses:

- Transfer of funds between any programs. Contracts, single vendor response to a competitive bid, sole source contracts, and any procurement documentation not pre-approved by DHSEM.
- Training and related travel costs not pre-approved by DHSEM.
- Supplanting (using federal funds to purchase items previously budgeted for with state or local funds).
- Maintenance and/or wear and tear costs of general use vehicles and emergency response apparatus.
- Equipment purchased for an exercise cannot be used for permanent installation and/or beyond the scope of an exercise.
- Weapons and ammunition.
- Entertainment and sporting events
- Personal items such as laundry, personal hygiene items, magazines, in-room movies, personal travel, and personal phone calls.
- Travel insurance, visa, and passport charges.
- Lodging costs in excess of State per diem, as appropriate.
- Lunch when travel is wholly within a single day.
- Standalone working meals.
- Bar charges, alcoholic beverages.
- Finance, late fees, or interest charges.
- Lobbying, political contributions, and legislative liaison activities.
- Organized fundraising, including salaries of persons while engaged in these activities.
- Expenditures not supported with appropriate documentation when submitted for reimbursement. Only properly documented expenditures will be processed for payment. Unsupported expenditures will be returned to the jurisdiction for resubmission.

F. Payment Conditions. The sub-recipient must certify that in requesting and accepting a sub-grant payment, they have spent those funds on eligible expenditures; that the work performed was within

the scope of work allowed for specific projects; and that all records pertinent to specific projects will be retained for at least the periods required under record retention regulation requirements from the closeout of the last project. The period of record retention for grant and financial data is three years if state funds are paid.

G. Delays and Denial of Payment. Reasons for delays in FEMA processing of payment requests include, but are not limited to, the following:

- Vendor identification number is missing or incorrect;
- Disaster and project number is missing;
- Period of performance (POP) listed is incorrect;
- Service delivery dates do not agree with invoices or outside of contract period;
- Dollar amount on forms do not agree;
- Mathematical errors;
- Full address of sub-grantee is not included;
- Sub-recipient did not provide required back-up documentation; or

Reasons for NMDHSEM declining payment requests include, but are not limited to, the following:

- The POP has expired;
- The amount exceeds the remaining funding available for disbursement prior to the final financial and program compliance reviews (the hold or funding retention amount);
- Request for payment requires a state and/or budget amendment, and cannot be processed until the amendment request is received/approved;
- The reimbursement requested is for an activity outside of the approved scope of work;
- Forms are not signed by an authorized person, or are signed by only one signatory;
- Reimbursement of awarded funds have been suspended due to a non-compliance issue such as failure to submit quarterly reports; or
- Reimbursements of awarded funds have been suspended due to noncompliance activities.

Sub-recipients can reduce the likelihood of delays in processing of payment requests by checking for accuracy prior to submission.

ARTICLE 3: AUDITING AND REPORTING REQUIREMENTS

A. Quarterly Reports. In accordance with 2 C.F.R. § 200.328, the Applicant shall submit quarterly reports to the NMDHSEM beginning with the first full quarter after the signature date on the Sub-recipient Grant Agreement. The NMDHSEM will provide sub-recipient a form for this report. Quarterly reports are due no later than the 15th of the month following the end of the quarter - January 15, April 15, July 15, and October 15.

In order that NMDHSEM may adequately evaluate the progress and status of each sub-grant, quarterly reports shall contain a description of the work accomplished to date, the methods and procedures used, the anticipated completion date, a summary of all project costs to date, and other such information as may be of assistance in its evaluation of the project.

Reports shall be sent to the Department of Homeland Security & Emergency Management, Recovery Unit, P.O. Box 27111, Santa Fe, NM 87502, or electronically to DHSEM.mitigation@dhsem.nm.gov.

B. Additional Reporting Requirements. The sub-recipient must immediately report in writing to the NMDHSEM Mitigation Unit any alleged acts or allegations of fraud or misappropriation of funds for work authorized under this Sub-recipient Grant Agreement. This extends to reporting any legal action, lawsuit, bankruptcy, or other action that may jeopardize the successful completion of any authorized

project. Additional reporting and financial reconciliation requirements may also be requested at NMDHSEM and FEMA's request. Failure to comply with these requests may jeopardize funding and may be a breach of this Sub-recipient Grant Agreement.

C. Enforcement. The NMDHSEM may suspend drawdowns, impose other special conditions, or take other authorized action pursuant to 2 C.F.R. § 200.339 (Remedies for Noncompliance) if the sub-recipient does not submit accurate and timely reports. This may include, among other things, the administrative closeout of a grant and/or any projects under a grant when the sub-recipient is not responsive to reasonable efforts NMDHSEM makes to collect required reports needed to complete closeout. Administrative closeout is a unilateral mechanism by NMDHSEM to move forward with project or grant closeout using available grant information in lieu of final reports. This can require NMDHSEM to make cash or cost adjustments and ineligible cost determinations, which may result in identifying a debt owed to FEMA and/or NMDHSEM.

D. Financial Procedures. The sub-recipient agrees to maintain financial procedures and support documents and to establish and maintain a proper accounting system to record expenditures of disaster assistance funds in accordance with generally accepted accounting principles or as directed by the Governor's Authorized Representative, to account for the receipt and expenditure of funds under this Agreement. If applicable, RECIPIENT / SUBGRANTEE shall conduct audit(s) pursuant to the Single Audit Act of 1984, 31 U.S.C. § 7501 et. seq., 44 C.F.R. Part 14, 2 C.F.R. Part 200, 0MB Circular A-133, "Audits of States, Local Governments, and Non-profit Organizations," and applicable New Mexico laws, rules and regulations. Further, sub-recipient must provide a hard copy of the Single Audit Report within sixty (60) days of the close of its fiscal year. Otherwise, pursuant to 44 C.F.R. § 13.43, NMDHSEM may withhold or suspend payments under any grant award.

The sub-recipient shall retain all financial records, supporting documents, statistical records, and any other documents pertinent to this contract for a period of five years after the date of submission of the final expenditures report. However, if litigation or an audit has been initiated prior to the expiration of the three-year period, the records shall be retained until the litigation or audit findings have been resolved.

E. Authorizing Statute. This award is made under the provisions of the Robert T. Stafford Disaster Relief and Emergency Assistance Act, Pub. L. No. 93-288 (1974) (codified as amended at 42 U.S.C. §§ 5121-5207) (Stafford Act), in accordance with 44 C.F.R. § 206.44.
All scopes of work and costs approved as a result of this Sub-recipient Grant Agreement, whether as estimates or final costs approved through subawards, PWs, or otherwise, will incorporate by reference the terms of this Sub-recipient Grant Agreement and must comply with applicable laws, regulations, policy, and guidance in accordance with this Sub-recipient Grant Agreement.

Pursuant to Executive Order 13858 Strengthening Buy-American Preferences for Infrastructure Projects, FEMA encourages recipients to use, to the greatest extent practicable and consistent with the law, iron and aluminum as well as steel, cement, and other manufactured products produced in the United States in Public Assistance and HMGP eligible public infrastructure repair and construction projects affecting surface transportation, ports, water resources including sewer and drinking water, and power. Such preference must be consistent with the law, including cost and contracting requirements at 2 C.F.R. Part 200.

F. Additional Terms and Conditions. The following additional sub-grant agreement documents are fully incorporated into this Sub-recipient Grant Agreement and thereby constitute additional terms and conditions of this agreement.

- The Stafford Act, its implementing regulations contained in Title 44 of the C.F.R., and FEMA policy and guidance.

- **Hazard Mitigation Assistance Guide (March 2023)**
- The Uniform Administrative Requirements, Cost Principles, and Audit Requirements for Federal Awards set forth at 2 C.F.R. Parts 200 and 3002.
- Attachment 1 United States Department of Homeland Security (USDHS) Standard Terms and Conditions (January 24, 2022) in effect on the date of the Declaration which are incorporated by reference into this Sub-recipient Grant Agreement
- Attachment 2 Reimbursement Checklist
- Attachment 3 Glossary and Definitions
- Attachment 4 Acronyms

ARTICLE 4: SCOPE OF WORK

A. As authorized by the Robert T. Stafford Disaster Relief and Emergency Assistance Act (the Stafford Act), as amended (42 U.S.C. § 5121 et seq.), and Section 662 of the Post Katrina Emergency Reform Act of 2006, as amended (6 U.S.C. § 762), the **City of Santa Fe.** The has been awarded funds for Cerrillos Rd stormwater infiltration at Ashbaugh Park. Funds shall be utilized as outlined in the approved budget as awarded by FEMA on **02/15/2024**. The Sub Recipient shall match the Federal Award Amount of **$540,263.60**, with a local jurisdictional amount of **$168,858.87** for a total project cost of **$709,122.47** All work performed pursuant to this agreement must comply with the approved FEMA application. All work must be completed within the performance period, between **02/15/2024 – 02/14/2027** The **City of Santa Fe** shall not sub-grant any part of this award to any other entity or organization. Within the first reporting quarter, all awards require confirmation that expenditures in the budget category toward this project will be made. If not, DHSEM may execute a de-obligation of Federal funds without recourse by the **City of Santa Fe.**

B. Approved projects must commence within the first reporting quarter. If a project cannot commence and be operational within the first reporting quarter of the approved award date, the sub–Recipient must submit a written statement to DHSEM, signed by the sub-recipient signatory officials, justifying the delay in implementation, the expected starting date, and a formal request to extend the project start date past the first reporting quarter. At the sole discretion of DHSEM, the grant award is subject to cancellation, and funds may be de-obligated and reallocated to other projects.

ARTICLE 5: PUBLICATIONS

A. Publications created with funding under this grant shall prominently contain the following statement or a DHSEM pre-approved modification: **This Document was prepared under a sub-grant from the FEDERAL EMERGENCY MANAGEMENT AGENCY, and the NEW MEXICO DEPARTMENT OF HOMELAND SECURITY AND EMERGENCY MANAGEMENT. Points of view or opinions expressed in this document are those of the authors and do not necessarily represent the official position or policies of the Federal Emergency Management Agency and the New Mexico Department of Homeland Security and Emergency Management.**

ARTICLE 6: PERFORMANCE PERIODS

The performance period for this sub-grant award is **02/15/2024 – 02/14/2027.** Further, all personnel-related grant activity must be completed between **02/15/2024 – 02/14/2027**. Funds may not be obligated outside of these time periods. An obligation occurs when funds are encumbered, as with a purchase order and/or commitment of salaries and benefits**. All obligated and encumbered funds *must be liquidated* within 45 days of the end of the performance period when the *Final Progress and Financial Reports* are due**.

ARTICLE 7: RECOVERY OF FUNDS FOR DUPLICATION OF BENEFITS AND INELIGIBLE ACTIVITIES

A. Ineligible Activities. The FEMA and/or NMDHSEM may disallow costs and recover funds based on the results of audit or review during or after performance of the award to ensure compliance with the terms of the Sub-recipient Grant Agreement and award document. The FEMA and/or NMDHSEM is required to recover funds when the sub-recipient has ineligible underruns (for example, actual costs for a PA large project are less than the amount awarded based on initial estimates); knowingly or negligently withholds or misrepresents material information; fails to complete work and comply with the terms of this Sub-recipient Grant Agreement or the approved award; expends federal funds in error; or incurs costs that are unreasonable or otherwise disallowed. If, after exhaustion of appeal rights, FEMA and/or NMDHSEM determines a debt is owed, the State has 30 days to resolve the amount owed before the debt is referred to the FEMA Finance Center for collection. The State may do so by directly paying FEMA. The State may also deposit the amount owed directly into the applicable subaccount in U.S. Health and Human Services (HHS)/Smartlink and notify FEMA when it has reimbursed that subaccount, after which FEMA will de-obligate that amount in the subaccount. Alternatively, the sub-recipient may request to substitute unallowable costs for other costs that are allowable (e.g., necessary, allocable, and reasonable under the same award and have not yet been reimbursed by FEMA).

B. Duplication of Benefits. In accordance with the provisions of 42 U.S.C. § 5155 (Section 312 of the Stafford Act), duplication of benefits is prohibited. The NMDHSEM must take all actions necessary and reasonable to ensure that all who receive federal assistance are aware of their responsibility to repay federal assistance that is duplicated by amounts available from insurance or any other source for the same purpose. The FEMA and/or NMDHSEM may at any time, pre-award or post-award, adjust the level of funding provided to account for financial assistance provided from any other source for the same purpose as the federal assistance or to account for benefits available for the same purpose from another source, irrespective of whether they are actually received. The sub-recipient shall notify NMDHSEM, as soon as practicable, of the existence of any insurance coverage for the costs identified in the application and of any entitlement to or recovery of funds from any other source for the project costs, including Small Business Administration funding, United States Department of Agriculture (USDA), and other Federal, State, and private funding. The amount of duplicate sources available shall reduce allowable costs. The sub-recipient shall be liable to NMDHSEM to the extent that the sub-recipient receives duplicate benefits from any other source for the same purposes for which the sub-recipient has received payment from the NMDHSEM.

C. Cooperation. The NMDHSEM agrees, on its behalf and on behalf of its political subdivisions and others that receive federal assistance, to cooperate with the Federal Government in seeking recovery of federal assistance against any party or parties whose intentional acts or omissions or whose negligence or other tortious conduct may have caused or contributed to the damage or hardship for which federal assistance was provided under this Sub-recipient Grant Agreement. If applicable, FEMA will treat recovered funds as duplicated benefits available to NMDHSEM/sub-recipient in accordance with Section 312 of the Stafford Act (codified as amended at 42 U.S.C. § 5155).

D. NMDHSEM Responsibilities. The NMDHSEM is responsible for recovering federal assistance expended in error, misrepresentation, fraud, or for costs otherwise disallowed or unused.

a. The NMDHSEM must notify FEMA of any potential debt as a result of federal funds expended in error, misrepresentation, fraud, or for costs otherwise disallowed or unused.

b. The NMDHSEM must report all cases of suspected fraud to the USDHS Office of Inspector General. The NMDHSEM must cooperate with any investigation conducted by the USDHS Office of Inspector General. The NMDHSEM must cooperate with FEMA regarding any and all lawsuits that may result from the NMDHSEM or FEMA's attempt to recover funds or disallow costs.

E. Statute of Limitations. The 3-year statute of limitations limiting FEMA's ability to initiate an administrative action to recover funds paid as provided for in Section 705(a) of the Stafford Act (codified as amended at 42 U.S.C. § 5205(a)) begins with:

a. Initiation of an Administrative Action to Recover Payment. The initiation of an administrative action to recover payment includes FEMA's written notice to the NMDHSEM or a sub-recipient of a questioned or disallowed cost or improper payment (including a request for information concerning such cost or payment) and written notice to the NMDHSEM or a sub-recipient of a FEMA or 3rd party review or audit.

F. Refunds, Rebates, and Credits. The NMDHSEM must transfer to FEMA the appropriate share, based on the federal support percentage, of any refund, rebate, credit or other amounts arising from the performance of this Sub-recipient Grant Agreement. The NMDHSEM must take necessary action to promptly collect all monies due or which may become due and if applicable, to cooperate with the Federal Government in any claim or suit in connection with amounts due.

G. Non-Compliant Sub-recipients. As per 2 C.F.R. §§ 200.207, 200.303(d) and 200.338(A-F), NMDHSEM can selectively use any or all the following remedies and prompt actions for non-compliance with any term of an award to include audit finding(s):

- **a.** Increased monitoring of projects and require additional financial and performance reports.
- **b.** Disallow advance payment process.
- **c.** Temporarily withhold payments pending correction of the deficiency.
- **d.** Disallow or deny use of funds and matching credit for all or part of the cost of the activity or action not in compliance.
- **e.** Request FEMA to completely or partially de-obligate funding for a project.
- **f.** Temporarily withhold payments pending correction of the deficiency by the sub-recipient.
- **g.** Withhold further awards for the grant program.
- **h.** Take other programmatic or legally available remedies.

ARTICLE 8: CONSTRUCTION REQUIREMENTS

A. The NMDHSEM must ensure that all applicable federal, state, and local permits and approvals are obtained, and all permit conditions are addressed before the start of any construction activity, including FEMA and NMDHSEM/sub-recipient compliance with the National Environmental Policy Act, the National Historic Preservation Act, the Endangered Species Act, and all other applicable environmental laws and executive orders. All construction should be in accordance with approved permits, projects plans and specifications, applicable building codes, and program guidance.

ARTICLE 9: NATIONAL ENVIRONMENTAL POLICY ACT (NEPA)/ENVIRONMENTAL PLANNING AND HISTORIC PRESERVATION (EHP) COMPLIANCE

A. The sub-recipient must provide information to FEMA the legally required environmental planning and historic preservation (EHP) review and to ensure compliance with the applicable EHP laws and Executive Orders (EO). These EHP requirements include but are not limited to National Environmental Policy Act, National Historic Preservation Act, Endangered Species Act, E 11988 Floodplain Management, EO 11990 Protection of Wetlands, and EO 12898 Environmental Justice. The sub-recipient must comply with all federal, state, local, tribal, and territorial EHP requirements and obtain applicable permits and clearances.

B. Sub-recipients shall not undertake any activity from the project that would result in ground disturbance, facility modification, or relates to the use of sonar equipment without the prior approval of FEMA. These include but are not limited to communications towers, physical security enhancements involving ground

disturbance, new construction, and modifications to buildings that are 50 years old or older, and exercises. The sub-recipient must comply with all mitigation or treatment measures required for the project as the result of FEMA's EHP review. An EHP Screening Form does not need to be provided for those exercises that are planned to take place at previously approved facilities, such as, fire and police academies, search and rescue training facilities, and explosive testing centers. Any type of exercise that requires any type of land, water, or vegetation disturbance or building of temporary structures must undergo an EHP review.

C. Any change to an approved project description will require re-evaluation for compliance with EHP requirements before the project can proceed. If ground disturbing activities occur during project implementation, the sub-recipient must ensure monitoring of ground disturbance and if any potential archeological resources are discovered, the sub-recipient will immediately cease construction in that area and notify NMDHSEM, FEMA and the New Mexico Historic Preservation Division. Initiation of these activities prior to completion of FEMA's EHP review will result in a non-compliance finding and may result in ineligibility of grant funding.

ARTICLE 10: PROPERTY AND EQUIPMENT MANAGEMENT

A. The sub-recipient will follow the property standards articulated in 2 C.F.R. § 200.310 through 2 CFR 200.326. The sub-recipient shall, when practical, prominently display the following on any equipment purchased with award funds: **PURCHASED WITH FUNDS PROVIDED BY THE FEDERAL EMERGENCY MANAGEMENT AGENCY.** No equipment purchased with these grant funds may be assigned to other entities or organizations without the expressed approval in writing from DHSEM prior to the jurisdiction's encumbrance or expenditure for that equipment.

B. The subrecipient will follow the property standards articulated in 2 C.F.R. § 200.310 through 2 C.F.R. § 200.326. The subrecipient shall maintain an effective property management system; safeguards to prevent loss, damage or theft; maintenance procedures to keep equipment in good condition; and disposition procedures. A Property Inventory Report shall be submitted to NMDHSEM annually each January 30 with the Financial Progress Report during the performance period, and continued submission is required annually until final disposition of the equipment. The subrecipient shall, when practical, prominently display the following on any equipment purchased with award funds: Purchased with funds provided by the U.S. Department of Homeland Security. No equipment purchased with these grant funds may be assigned to other entities or organizations without the expressed approval in writing from NMDHSEM, prior to the jurisdiction's encumbrance or expenditure for that equipment.

C. Any disposition of property or equipment must be in accordance with 2 C.F.R. § 200.313(e) and pre-approved by FEMA through NMDHSEM.

ARTICLE 11: SUBRECIPIENT MONITORING POLICY

A. In accordance with 2 C.F.R. § 200.328, NMDHSEM may periodically monitor a sub-recipient's projects to ensure that program goals, objectives, timelines, budgets, and other related program criteria are being met. The NMDHSEM reserves the right to periodically review and conduct analysis of the sub-recipient's financial, programmatic, and administrative policies and procedures. This monitoring may include review of accounting for receipts and expenditures, cash management, maintaining adequate financial records, means of allocating and tracking costs, contracting, procurement, records management, payroll, means of allocating staff costs, property and equipment management system, progress of project activities, etc. This may include unscheduled desk audits and field inspections. The sub-recipient shall accommodate all such requests within reason. If the sub-recipient encounters any unanticipated problem with the Scope of Work, allowed costs, procurement, permitting, or other difficulty, the sub-recipient must communicate that problem to NMDHSEM promptly. Work on affected projects must be suspended until the problem is

resolved. Technical assistance is available from NMDHSEM staff.

B. The sub-recipient will immediately, no later than 24-hours upon notice, report to NMDHSEM allegations of wrong-doing on the part of any contractor, sub-contractor, agent or employee of the sub-recipient, or other interested party in reference to the work authorized under this Sub-recipient Grant Agreement. This extends to any legal action, lawsuit, bankruptcy, or other action that may jeopardize the successful completion of any authorized project.

ARTICLE 12: PROCUREMENT

A. Procurement shall comply with all federal, state, and local procurement requirements including 2 C.F.R. § 200.320 and the New Mexico Procurement Code for expenditure of funds under this Agreement. The Applicant must conform to applicable state and federal law and the Procurement Standards Sections 2 C.F.R. § 200.317-326, and Appendix II. Contractors that develop or draft specifications, requirements, Statements of Work, and/or Requests for Proposals (RFP) for a proposed procurement shall be excluded from bidding or submitting a proposal to compete for the award of such procurement. Local bidder's preference is not allowed for federally funded procurements. Procurement transactions shall be conducted to provide maximum open and free competition.

B. When procuring property and services under this agreement, the sub-recipient will follow 2 C.F.R. § 200.318 through 2 C.F.R. § 200.326 and Appendix II. The sub-recipient must use its own documented procurement procedures which reflect applicable state, local, tribal, and territorial laws, and regulations, provided that the procurements conform to applicable federal law and the standards identified in 2 C.F.R. § 200. As such, the sub-recipient must use one of the methods of procurement identified in 2 C.F.R. § 200.320.

C. Also, per 2 C.F.R. § 200.318(i), subrecipients are required to maintain and retain records sufficient to detail the history of procurement covering at least the rationale for the procurement method, selection of contract type, contractor selection or rejection, and the basis for the contract price. States and territories are encouraged to maintain and retain this information as well and are reminded that in order for any cost to be allowable, it must be adequately documented per 2 C.F.R. § 200.403(g). Examples of the types of documents that would cover this information include but are not limited to:

- **a.** Solicitation documentation, such as requests for quotes, invitations for bids, or requests for proposals;
- **b.** Responses to solicitations, such as quotes, bids, or proposals;
- **c.** Pre-solicitation independent cost estimates and post-solicitation cost/price analyses on file for review by federal personnel, if applicable;
- **d.** Contract documents and amendments, including required contract provisions; and
- **e.** Other documents required by federal regulations applicable at the time a subgrant is awarded to a subrecipient.

D. Procurement from Minority Owned and Women Owned Business is encouraged and must be tracked and reported to NMDHSEM on the quarterly reports. Procurement transactions shall be conducted to provide maximum open and free competition. Each sole–source procurement single vendor response to a competitive bid, and all purchases require prior approval of NMDHSEM.

E. The sub-recipient will follow the property standards articulated in 2 C.F.R. § 200.310 through 2 C.F.R. § 200.326. The sub-recipient shall maintain an effective property management system; safeguards to prevent loss, damage or theft; maintenance procedures to keep equipment in good condition; and disposition procedures. Property and equipment records shall be maintained for a period of three years following the final disposition, replacement or transfer of the property and equipment.

ARTICLE 13: CONTRACTS

A. Contractors that develop or draft specifications, requirements, Statements of Work, and/or Requests for Proposals (RFP) for a proposed procurement shall be excluded from bidding or submitting a proposal to compete for the award of such procurement. Local bidder's preference is not allowed for federally funded procurements. Procurement transactions shall be conducted to provide maximum open and free competition. Each sole–source procurement, single vendor response to a competitive bid, and all purchases require prior approval of DHSEM.

B. Any contract shall comply with the requirements of Procurement Standards Sections of 28 C.F.R. Parts 66 and 70, 2 C.F.R. Part 200 and OMB Circulars A–102 "Uniform Administrative Requirements for Grants and Cooperative Agreements with State and Local Governments" for expenditure of Federal funds under this Sub-recipient Grant Agreement. Applicants shall submit procurement and contracts to NMDHSEM for review prior to approval. Contracts for professional services must meet applicable local, state, and federal requirements. All contractors must be licensed in New Mexico for the type of work that is required. Prior to any contracted work beginning, the sub-recipient shall provide NMDHSEM with a copy of the contractor's license. Contract work must not exceed the scope of work and PW awarded amount prescribed by FEMA, unless requested through a scope of work change and approval from FEMA.

C. Any contract entered during this sub-grant period shall comply with local, State, and Federal government contracting regulations. Professional and consultant services contracts must include local, State, and Federal government-required contract language, a project budget, SOW, and a pay schedule. ***All contracts require pre-approval by DHSEM prior to execution.*** Contract deliverables must meet the intent of the grant application and grant requirements. Justification is required for compensation for individual consultant services, which must be reasonable and consistent with the amount paid for similar services in the marketplace. Detailed invoices and time and effort reports are required for consultants.

ARTICLE 14: COMPETITION AND CONFLICTS OF INTEREST

A. Among the requirements of 2 C.F.R. § 200.319(b) applicable to all non-federal entities other than states, in order to ensure objective contractor performance and eliminate unfair competitive advantage, contractors that develop or draft specifications, requirements, statements of work, or invitations for bids or requests for proposals must be excluded from competing for such procurements. The FEMA considers these actions to be an organizational conflict of interest and interprets this restriction as applying to contractors that help a subrecipient develop its grant application, project plans or project budget. This prohibition also applies to the use of former employees to manage the grant or carry out a contract when those former employees worked on such activities while they were employees of the non-federal entity.

B. Under this prohibition, unless the subrecipient solicits for and awards a contract covering both development and execution of specifications (or similar elements as described above), and this contract was procured in compliance with 2 C.F.R. §§ 200.317 – 200.327, federal funds cannot be used to pay a contractor to carry out the work if that contractor also worked on the development of those specifications. This rule applies to all contracts funded with federal grant funds, including pre-award costs, such as grant writer fees, as well as post-award costs, such as grant management fees. Additionally, some of the situations considered to be restrictive of competition include, but are not limited to:

- **a.** Placing unreasonable requirements on firms for them to qualify to do business;
- **b.** Requiring unnecessary experience and excessive bonding;
- **c.** Noncompetitive pricing practices between firms or between affiliated companies;
- **d.** Noncompetitive contracts to consultants that are on retainer contracts;
- **e.** Organizational conflicts of interest;

f. Specifying only a "brand name" product instead of allowing "an equal" product to be offered and describing the performance or other relevant requirements of the procurement; and

g. Any arbitrary action in the procurement process.

C. Per 2 C.F.R. § 200.319(c), the subrecipient must conduct procurements in a manner that prohibits the use of statutorily or administratively imposed state, local, tribal, or territorial geographical preferences in the evaluation of bids or proposals, except in those cases where applicable federal statutes expressly mandate or encourage geographic preference. Nothing in this section preempts state licensing laws. **When contracting for architectural and engineering services, geographic location may be a selection criterion, provided its application leaves an appropriate number of qualified firms, given the nature and size of the project, to compete for the contract.**

D. Under 2 C.F.R. § 200.318(c)(1), the subrecipient is required to maintain written standards of conduct covering conflicts of interest and governing the actions of their employees engaged in the selection, award, and administration of contracts. **No employee, officer, or agent may participate in the selection, award, or administration of a contract supported by a federal award if he or she has a real or apparent conflict of interest.** Such conflicts of interest would arise when the employee, officer or agent, any member of his or her immediate family, his or her partner, or an organization that employs or is about to employ any of the parties indicated herein, has a financial or other interest in or a tangible personal benefit from a firm considered for a contract. The non-federal entity's officers, employees, and agents may neither solicit nor accept gratuities, favors, or anything of monetary value from contractors or parties to subcontracts. However, subrecipient entities may set standards for situations in which the financial interest is not substantial, or the gift is an unsolicited item of nominal value. The standards of conduct must provide for disciplinary actions to be applied for violations of such standards by officers, employees, or agents of the non-federal entity.

E. Under 2 C.F.R. § 200.318(c)(2), if the subrecipient has a parent, affiliate, or subsidiary organization that is not a state, local, tribal or territorial government, the subrecipient must also maintain written standards of conduct covering organizational conflicts of interest. In this context, organizational conflict of interest means that because of a relationship with a parent company, affiliate, or subsidiary organization, the subrecipient is unable or appears to be unable to be impartial in conducting a procurement action involving a related organization. The non-federal entity must disclose in writing any potential conflicts of interest to FEMA or NMDHSEM in accordance with applicable FEMA policy.

ARTICLE 15: CONTRACTS

A. Contracts for professional and consultant services executed during this grant period must include federal, state, local, tribal, and territorial government required contract language, a project budget, and require pre-approval by NMDHSEM prior to implementation. Contract deliverables must meet the intent of the grant application and grant requirements. Justification is required for compensation for individual consultant services, which must be reasonable and consistent with the amount paid for similar services in the marketplace. Detailed invoices and time and effort reports are required for consultants. *See* 2 C.F.R. § 200.1, 2 C.F.R. § 200 Appendix II to Part 200.

ARTICLE 16: AUDIT REQUIREMENTS

A. As a federal grant recipient, the State of New Mexico requires a sub-recipient expending $750,000 or more in federal funds in the organization's fiscal year to conduct an organization–wide audit in accordance with the Single Audit described in 2 C.F.R. § 200.501. The sub-recipient will permit state or federal officials and auditors to have access to sub-recipient and contractor records and financial statements as necessary for

the state to comply with 2 C.F.R. § 200.501. Copies of audit findings must be submitted to NMDHSEM within 30 days after the sub-recipient receives its audit report, or within a 9-month period of the grant closeout date, whichever is earlier. Include the federal agency name, program, grant number, the CFDA title and number, and the name of the pass-through agency (NMDHSEM) in all documents.

ARTICLE 17: RECORDS RETENTION

A. Records Retention.

a. **State Requirement.** The State must retain records for three years after all projects are complete and the federal disaster is formally closed out, except in certain rare circumstances described in 2 C.F.R. § 200.334 (Retention requirements for records), from the date it submits the final Federal Financial Report (SF-425) to FEMA in compliance with 2 C.F.R. § 200.334. If FEMA administratively closes the grant where no final SF-425 was submitted, FEMA uses the date the grant was administratively closed as the start date for the three-year record retention period.

b. **Sub-recipient Requirement.** The sub-recipients must retain project or subaward records for at least three years from the date that the NMDHSEM submits to FEMA the final expenditure report for a project or subaward. If, however, there is any litigation, claim, negotiation, audit, request for information, or other action involving the project or subaward that starts before that date, the records must be retained until completion of the action and resolution of all issues which arise from it, or until the end of the three-year period, whichever is later.

c. The sub-recipient will follow the record retention and access standards articulated in 2 C.F.R. § 200.333 through 2 C.F.R. § 200.337. The grant financial and administrative records shall be maintained for a period of three years following the date of the closure of the grant award, or audit if required. Time and effort, personnel and payroll records for all individuals reimbursed under the award must be maintained. Property and equipment records shall be maintained for a period of three years following the final disposition, replacement or transfer of the property and equipment.

d. The sub-recipient will be required to maintain project records until the expiration of the appropriate retention period. This includes records related to Management Costs, procurement, contracting, accounts payable, engineering, inventory, force account (materials, labor, and equipment), insurance settlements or other records related to the project scope of work. Retention procedures are outlined in the Hazard Mitigation Assistance Grant Programs Administrative Plan.

ARTICLE 18: CHANGES TO AWARD

A. All change requests must be submitted either in writing or electronically to the NMDHSEM contact for review 90 days prior to the termination of this Sub-recipient Grant Agreement. All change requests must be accompanied by a justification narrative and a budget and spending plan. All change requests must be consistent with the scope of the project and grant guidelines. Change requests will be considered only if reporting requirements are current, and all other terms and conditions of this Sub-recipient Grant Agreement have otherwise been met at the time of the request. If approved by NMDHSEM and FEMA, changes in the programmatic activities, purpose of the project, key personnel specified on the grant award, contractual services for activities central to the purposes of the award, change in project site, or release of special conditions, will result in an amendment to this award. Requests for changes must be formally submitted to NMDHSEM and FEMA.

B. Changes to this Sub-recipient Grant Agreement will be made via a Sub-recipient Grant Agreement Amendment. The NMDHSEM will prepare each Amendment when needed. No Sub-recipient Grant

Agreement Amendment is valid until fully executed.

ARTICLE 19: REMEDIES FOR NONCOMPLIANCE

A. For the reasons listed below, special conditions may be imposed, reimbursements may be partially or wholly withheld, the award may be wholly or partly suspended or terminated, or future awards, reimbursements and award modifications may be withheld. The NMDHSEM may institute the following, but is not limited to, withholding authority to proceed to the next phase of a project, requiring additional or more detailed financial reports, additional project monitoring, and/or establish additional prior approvals. The NMDHSEM shall notify the sub-recipient of its decision in writing stating the nature and the reason for imposing the conditions/restrictions, the corrective action required and timeline to remove them, and the method of requesting reconsideration of the imposed conditions/restrictions. The sub-recipient must respond within five days of receipt of notification.

- **a.** Unwillingness or inability to attain project goals or scope of work.
- **b.** Unwillingness or inability to adhere to Special Conditions of this Sub-recipient Grant Agreement.
- **c.** Failure or inability to adhere to grant guidelines and federal compliance requirements.
- **d.** Improper procedures regarding contracts and procurements.
- **e.** Failure to submit reliable and/or timely reports.
- **f.** Fiscal management which does not meet reasonable professional standards.
- **g.** Failure or inability to adhere to the terms and conditions of this Sub-recipient Grant Agreement.
- **h.** Unwillingness or inability to obtain permits required by law to perform the eligible work.
- **i.** Noncompliance with any and all federal, state, local and tribal grant requirements.

B. The NMDHSEM shall notify the sub-recipient of any non-compliance issues in writing and shall attempt to arrive at a resolution in a timely and reasonable fashion. If corrective action is required, NMDHSEM and the sub-recipient shall determine a timeline and landmarks for remediation. The NMDHSEM may require additional detailed financial reports or additional project monitoring. The ultimate penalty for non-compliance with the terms and conditions of this Sub-recipient Grant Agreement is for payments to be withheld or for the award to be suspended or terminated. The sub-recipient agrees to make restitution if necessary.

C. The NMDHSEM may take action as it determines appropriate under the circumstances including but not limited to withholding of payments, disallowance of costs, suspension or termination of the award if the sub-recipient fails to comply with applicable Federal and State statutes, regulations, or the terms of this Sub-recipient Grant Agreement pursuant to 2 C.F.R. § 200.339.

D. Nothing in this section abrogates the sub-recipient's right of appeal.

ARTICLE 20: TERMINATION

A. **For Cause:** In compliance with 2 C.F.R. § Part 200.340(a)(1), if performance is not occurring as agreed, the award may be reduced or terminated without compensation for reduction or termination costs. The NMDHSEM will provide notice of five days to the subrecipient stating the reasons for the action, steps taken to correct the problems, and the commencement date of the reduction or termination. The NMDHSEM will reimburse the subrecipient only for acceptable work or deliverables, necessary and allowable costs incurred through the date of reduction or termination. Final payment may be withheld at the discretion of NMDHSEM until completion of a final NMDHSEM review. Disposition of any equipment acquired under a terminated grant must be in accordance with 2 C.F.R. § 200.313(e).

B. For Convenience: In compliance with 2 CFR Part 200.340(a)(4), this Agreement may be terminated without cause by the subrecipient upon written notice setting forth the reasons for such termination, and the effective date at least 30 days prior to the intended date of termination. A termination pursuant to this provision does not nullify a party's obligations for performance, or liabilities for failure to perform already incurred prior to the date of termination. Any project may be terminated upon convenience, in whole or in part, for the convenience of the subrecipient; though a partial termination notification must specify that portion of the project which is to be terminated. Allowable costs obligated and/or incurred through the date of termination shall be reimbursed. Disposition of any equipment acquired under a terminated grant must be in accordance with 2 C.F.R. § 200.313(e).

ARTICLE 21: CLOSEOUT OF SUB-GRANT

A. Closeout of Projects. Per 2 C.F.R. § 200.344, sub-recipients must submit all cost and supporting documentation for completed projects. The NMDHSEM will review and verify all costs and supporting documents to validate compliance. Failure to comply will result in de-obligation of the project. The NMDHSEM will close each sub-recipient file once it has conducted full review and approval of all supporting documents for compliance and all projects are completed and has project activity closed out.

a. Management Costs. Management Costs will be used for internal staff salaries, contractor payments and other support costs associated with this grant. This will be in accordance with all laws, rules, and FEMA regulations. Management Costs will be processed in accordance with the Hazard Mitigation Assistance Program and Policy Guide.

The NMDHSEM commits to closeout of all grants regardless of the availability of management costs.

ARTICLE 22: SPECIAL CONDITIONS

A. The terms of this Sub-recipient Grant Agreement are contingent upon sufficient appropriations and authorizations being made by the USDHS FEMA under the Robert T. Stafford Disaster Relief and Emergency Assistance Act U.S.C. §§ 5121-5207. If sufficient appropriations and authorizations are not made by FEMA this Sub-recipient Grant Agreement shall terminate immediately upon written notice being given by NMDHSEM to the sub-recipient. The decision of NMDHSEM shall be final.

B. If NMDHSEM proposes an Amendment to the Sub-recipient Grant Agreement to unilaterally reduce funding, the sub-recipient shall have the option to terminate the Sub-recipient Grant Agreement or agree to the reduced funding within 30 days of receipt of the proposed Amendment.

C. Each party shall be solely responsible for fiscal or other sanctions occasioned because of its own violation of requirements applicable to the performance of this Sub-recipient Grant Agreement. Each party shall be liable for its own actions or inactions in accordance with state law and nothing herein shall be deemed a waiver, indemnity or to otherwise create or effect liabilities between the parties.

D. The grant award amount is a funding allocation and is not to be interpreted as expenditure authorizations or approvals.

E. All awarded projects must be planned for, conducted, budgeted, and expended within the designated performance period.

F. Quarterly financial and progress reports are due on October 15, January 15, April 15, and July 15, within the POP. Final reports are due 15 days after the end of POP.

G. All revision requests must be reviewed and approved by NMDHSEM staff. All requests must meet the original scope of the project which may result in a sub-recipient grant amendment.

H. A revision of a project's SOW must be pre-approved by NMDHSEM staff before the jurisdiction can proceed with the request for approval process. If the revision is approved, NMDHSEM staff may request additional documentation to proceed with recommendation to NMDHSEM Leadership for final approval.

I. The beneficiary of this award is solely responsible for all expenditures that are incurred outside of the award performance period. All expenditures that are incurred above and beyond the amount of this Sub-recipient Grant Agreement are the sole responsibility of the sub-recipient of this award.

J. Procurement from Minority Owned and Women Owned Business is encouraged and must be tracked and reported to NMDHSEM on the quarterly reports.

K. Upon completion of all awarded projects, any remaining funds will be de-obligated and reverted to NMDHSEM for return to FEMA.

L. Extensions due to exigent or emergency circumstances will be determined by NMDHSEM on a case-by-case basis.

State of New Mexico
Department of Homeland Security & Emergency Management
P.O. Box 27111
Santa Fe, NM 87502

The acceptance of a subgrant from the United States and the State of New Mexico creates a legal duty and obligation on the part of the sub-recipient to use the funds or property made available in accordance with the conditions of the grant as administered by and through the New Mexico Department of Homeland Security and Emergency Management. By signing this obligating award document, the sub-recipient certifies it has read, understood, and accepted these documents as binding.

SUB-RECIPIENT GRANT AGREEMENT
Signatures of Acceptance

SUB-GRANT NO:			
JURISDICTION GRANT PROGRAM MANAGER PRINTED NAME:			
OFFICIAL SIGNATURE:		**DATE:**	
CONTACT NUMBER:		**E-MAIL ADDRESS:**	
JURISDICTION CHIEF FINANCIAL OFFICER PRINTED NAME:			
OFFICIAL SIGNATURE:		**Date:**	
CONTACT NUMBER:		**E-MAIL ADDRESS:**	
JURISDICTION SIGNATORY OFFICIAL PRINTED NAME:			
OFFICIAL SIGNATURE:		**DATE:**	
CONTACT NUMBER:		**E-MAIL ADDRESS:**	
NMDHSEM MITIGATION PROGRAM BUREAU CHIEF PRINTED NAME:			
NMDHSEM MITIGATION PROGRAM BUREAU CHIEF OFFICIAL SIGNATURE / DATE:			
NMDHSEM GRANTS MANAGEMENT BUREAU CHIEF PRINTED NAME:			
NMDHSEM GRANTS MANAGEMENT BUREAU CHIEF OFFICIAL SIGNATURE / DATE:			
NMDHSEM DEPUTY CABINET SECRETARY OFFICIAL PRINTED NAME:			
NMDHSEM DEPUTY CABINET SECRETARY OFFICIAL SIGNATURE / DATE:			

Print one original agreement, sign and email to: DHSEM.MITIGATION@DHSEM.nm.gov

CITY OF SANTA FE:

_____
ALAN WEBBER, MAYOR

DATE:_____

ATTEST:

_____
CITY CLERK

CITY ATTORNEY'S OFFICE:

_____
ASSISTANT CITY ATTORNEY

APPROVED FOR FINANCES:

Emily K. Oster 11/01/2024
_____
FINANCE DIRECTOR

The page is intentionally left blank.

ATTACHMENT 1
USDHS Standard Terms and Conditions
(January 24, 2022)

The Fiscal Year (FY) 2022 USDHS Standard Terms and Conditions apply to all new federal financial assistance awards funded in FY 2022. These terms and conditions flow down to sub-recipients unless an award term or condition specifically indicates otherwise. The United States has the right to seek judicial enforcement of these obligations.

All legislation and digital resources are referenced with no digital links. The FY 2022 USDHS Standard Terms and Conditions will be housed on dhs.gov at www.dhs.gov/publication/fy15-dhs- standard-terms-and-conditions.

A. Assurances, Administrative Requirements, Cost Principles, Representations and Certifications

I. USDHS financial assistance recipients must complete either the Office of Management and Budget (OMB) Standard Form 424B Assurances – Non-Construction Programs, or OMB Standard Form 424D Assurances – Construction Programs, as applicable. Certain assurances in these documents may not be applicable to your program, and the USDHS financial assistance office (USDHS FAO) may require applicants to certify additional assurances. Applicants are required to fill out the assurances as instructed by the awarding agency.

II. USDHS financial assistance recipients are required to follow the applicable provisions of the Uniform Administrative Requirements, Cost Principles, and Audit Requirements for Federal Awards located at Title 2, Code of Federal Regulations (C.F.R.) Part 200 and adopted by USDHS at 2 C.F.R. Part 3002.

III. By accepting this Agreement, recipients, and their executives, as defined in 2 C.F.R. § 170.315, certify that their policies are in accordance with OMB's guidance located at 2 C.F.R. Part 200, all applicable federal laws, and relevant Executive guidance.

B. General Acknowledgements and Assurances

All recipients, sub-recipients, successors, transferees, and assignees must acknowledge and agree to comply with applicable provisions governing USDHS access to records, accounts, documents, information, facilities, and staff.

I. Recipients must cooperate with any USDHS compliance reviews or compliance investigations conducted by USDHS.

II. Recipients must give USDHS access to examine and copy records, accounts, and other documents and sources of information related to the federal financial assistance award and permit access to facilities or personnel.

III. Recipients must submit timely, complete, and accurate reports to the appropriate USDHS officials and maintain appropriate backup documentation to support the reports.

IV. Recipients must comply with all other special reporting, data collection, and evaluation requirements, as prescribed by law, or detailed in program guidance.

V. Recipients (as defined in 2 C.F.R. Part 200 and including recipients acting as pass-through entities) of federal financial assistance from USDHS or one of its awarding component agencies must complete the USDHS Civil Rights Evaluation Tool within thirty (30) days of receipt of the Notice of Award for the first award under which this term applies. Recipients of multiple awards of USDHS financial assistance should only submit one completed tool for their organization, not per award. After the initial submission, recipients are required to complete the tool once every two (2) years if they have an active award, not every time an award is made. Recipients should submit the completed tool, including supporting materials, to CivilRightsEvaluation@hq.dhs.gov. This tool clarifies the civil rights obligations and related reporting requirements contained in the USDHS

Standard Terms and Conditions. Sub-recipients are not required to complete and submit this tool to USDHS. The evaluation tool can be found at https://www.dhs.gov/publication/dhs- civil-rights-evaluation-tool.

The USDHS Office for Civil Rights and Civil Liberties will consider, in its discretion, granting an extension if the recipient identifies steps and a timeline for completing the tool. Recipients should request extensions by emailing the request to CivilRightsEvaluation@hq.dhs.gov prior to expiration of the 30-day deadline.

C. Standard Terms & Conditions

I. Acknowledgement of Federal Funding from USDHS

Recipients must acknowledge their use of federal funding when issuing statements, press releases, requests for proposal, bid invitations, and other documents describing projects or programs funded in whole or in part with federal funds.

II. Activities Conducted Abroad

Recipients must ensure that project activities performed outside the United States are coordinated as necessary with appropriate government authorities and that appropriate licenses, permits, or approvals are obtained.

III. Age Discrimination Act of 1975

Recipients must comply with the requirements of the Age Discrimination Act of 1975, Public Law 94-135 (1975) (codified as amended at Title 42, U.S. Code, § 6101 et seq.), which prohibits discrimination on the basis of age in any program or activity receiving federal financial assistance.

IV. Americans with Disabilities Act of 1990

Recipients must comply with the requirements of Titles I, II, and III of the Americans with Disabilities Act, Pub. L. 101-336 (1990) (codified as amended at 42 U.S.C. §§ 12101– 12213), which prohibits recipients from discriminating on the basis of disability in the operation of public entities, public and private transportation systems, places of public accommodation, and certain testing entities.

V. Best Practices for Collection and Use of Personally Identifiable Information

Recipients who collect personally identifiable information (PII) are required to have a publicly available privacy policy that describes standards on the usage and maintenance of the PII they collect. USDHS defines PII as any information that permits the identity of an individual to be directly or indirectly inferred, including any information that is linked or linkable to that individual. Recipients may also find the USDHS Privacy Impact Assessments: Privacy Guidance and Privacy Template as useful resources respectively.

VI. Civil Rights Act of 1964 – Title VI

Recipients must comply with the requirements of Title VI of the Civil Rights Act of 1964 (codified as amended at 42 U.S.C. § 2000d et seq.), which provides that no person in the United States will, on the grounds of race, color, or national origin, be excluded from participation in, be denied the benefits of, or be subjected to discrimination under any program or activity receiving federal financial assistance. USDHS implementing regulations for the Act are found at 6 C.F.R. Part 21 and 44 C.F.R. Part 7.

VII. Civil Rights Act of 1968

Recipients must comply with Title VIII of the Civil Rights Act of 1968, Pub. L. 90-284, as amended through Pub. L. 113-4, which prohibits recipients from discriminating in the sale, rental, financing, and advertising of dwellings, or in the provision of services in connection therewith, on the basis of race, color, national origin, religion, disability, familial status, and sex (see 42 U.S.C. § 3601 et seq.), as implemented by the U.S. Department of Housing and Urban Development at 24 C.F.R. Part 100. The prohibition on disability discrimination includes the requirement that new multifamily housing with four or more dwelling units—i.e., the public and common use areas and individual apartment units (all units in buildings with elevators and ground-floor units in buildings without elevators)—be designed and constructed with certain accessible features. (See 24 C.F.R. Part 100, Subpart D.)

VIII. Copyright

Recipients must affix the applicable copyright notices of 17 U.S.C. §§ 401 or 402 and an acknowledgement of U.S. Government sponsorship (including the award number) to any work first produced under federal financial assistance awards.

IX. Debarment and Suspension

Recipients are subject to the non-procurement debarment and suspension regulations implementing Executive Orders (E.O.) 12549 and 12689, which are at 2 C.F.R. Part 180 as adopted by USDHS at 2 C.F.R. Part 3002. These regulations restrict federal financial assistance awards, subawards, and contracts with certain parties that are debarred, suspended, or otherwise excluded from or ineligible for participation in federal assistance programs or activities.

X. Drug-Free Workplace Regulations

Recipients must comply with drug-free workplace requirements in Subpart B (or Subpart C, if the recipient is an individual) of 2 C.F.R. Part 3001, which adopts the Government-wide implementation (2 C.F.R. Part 182) of Sec. 5152-5158 of the Drug-Free Workplace Act of 1988 (41 U.S.C. §§ 8101-8106).

XI. Duplication of Benefits

Any cost allocable to a particular federal financial assistance award provided for in 2 C.F.R. Part 200, Subpart E may not be charged to other federal financial assistance awards to overcome fund deficiencies; to avoid restrictions imposed by federal statutes, regulations, or federal financial assistance award terms and conditions; or for other reasons. However, these prohibitions would not preclude recipients from shifting costs that are allowable under two or more awards in accordance with existing federal statutes, regulations, or the federal financial assistance award terms and conditions may not be charged to other federal financial assistance awards to overcome fund deficiencies; to avoid restrictions imposed by federal statutes, regulations, or federal financial assistance award terms and conditions; or for other reasons.

XII. Education Amendments of 1972 (Equal Opportunity in Education Act) – Title IX

Recipients must comply with the requirements of Title IX of the Education Amendments of 1972, Pub. L. 92-318 (1972) (codified as amended at 20 U.S.C. § 1681 et seq.), which provide that no person in the United States will, on the basis of sex, be excluded from participation in, be denied the benefits of, or be subjected to discrimination under any educational program or activity receiving federal financial assistance. USDHS implementing regulations are codified at 6 C.F.R. Part 17 and 44 C.F.R. Part 19.

XIII. Energy Policy and Conservation Act

Recipients must comply with the requirements of the Energy Policy and Conservation Act, Pub. L. 94- 163 (1975) (codified as amended at 42 U.S.C. § 6201 et seq.), which contain policies relating to energy efficiency that are defined in the state energy conservation plan issued in compliance with this Act.

XIV. Ensuring the Future is Made in All of America by All of America's Workers

Recipients must comply with the "Build America, Buy America" provisions of the Infrastructure Investment and Jobs Act and E.O. 14005 which provide that, as appropriate and to the extent consistent with law, the recipient must use all practicable means within their authority under a federal award to provide a preference for the purchase, acquisition, or use of goods, products, or materials produced in the United States (including but not limited to iron, aluminum, steel, cement, and other manufactured products.)

XV. False Claims Act and Program Fraud Civil Remedies

Recipients must comply with the requirements of the False Claims Act, 31 U.S.C. §§3729- 3733, which prohibit the submission of false or fraudulent claims for payment to the Federal Government. (See 31 U.S.C. §§ 3801-3812, which details the administrative remedies for false claims and statements made.)

XVI. Federal Debt Status

All recipients are required to be non-delinquent in their repayment of any federal debt. Examples of relevant debt include delinquent payroll and other taxes, audit disallowances, and benefit overpayments. (See OMB Circular A-129.)

XVII. Federal Leadership on Reducing Text Messaging while Driving

Recipients are encouraged to adopt and enforce policies that ban text messaging while driving as described in E.O. 13513, including conducting initiatives described in Section 3(a) of the Order when on official government business or when performing any work for or on behalf of the Federal Government.

XVIII. Fly America Act of 1974

Recipients must comply with Preference for U.S. Flag Air Carriers (air carriers holding certificates under 49 U.S.C.) for international air transportation of people and property to the extent that such service is available, in accordance with the International Air Transportation Fair Competitive Practices Act of 1974, 49 U.S.C. § 40118, and the interpretative guidelines issued by the Comptroller General of the United States in the March 31, 1981, amendment to Comptroller General Decision B-138942.

XIX. Hotel and Motel Fire Safety Act of 1990

Recipients must ensure that all conference, meeting, convention, or training space funded in whole or in part with federal funds complies with the fire prevention and control guidelines of Section 6 of the Hotel and Motel Fire Safety Act of 1990, 15 U.S.C. § 2225a.

XX. John S. McCain National Defense Authorization Act of Fiscal Year 2019

Recipients, sub-recipients, and their contractors and subcontractors are subject to the prohibitions described in section 889 of the John S. McCain National Defense Authorization Act for Fiscal Year 2019, Pub. L. No. 115-232 (2018) and 2 C.F.R. §§ 200.216, 200.327, 200.471, and Appendix II to 2 C.F.R. Part 200. Beginning August 13, 2020, the statute – as it applies to USDHS recipients, sub-recipients, and their contractors and subcontractors – prohibits obligating or expending federal award funds on certain telecommunications and video surveillance products

and contracting with certain entities for national security reasons.

XXI. Limited English Proficiency (Civil Rights Act of 1964, Title VI)

Recipients must comply with Title VI of the Civil Rights Act of 1964, (42 U.S.C. § 2000d et seq.) prohibition against discrimination on the basis of national origin, which requires that recipients of federal financial assistance take reasonable steps to provide meaningful access to persons with limited English proficiency (LEP) to their programs and services. For additional assistance and information regarding language access obligations, please refer to the USDHS Recipient Guidance: https://www.dhs.gov/guidance- published-help- department- supported-organizations-provide-meaningful-access-people-limited and additional resources on http://www.lep.gov.

XXII. Lobbying Prohibitions

Recipients must comply with 31 U.S.C. § 1352, which provides that none of the funds provided under a federal financial assistance award may be expended by the recipient to pay any person to influence, or attempt to influence an officer or employee of any agency, a Member of Congress, an officer or employee of Congress, or an employee of a Member of Congress in connection with any federal action related to a federal award or contract, including any extension, continuation, renewal, amendment, or modification.

XXIII. National Environmental Policy Act

Recipients must comply with the requirements of the National Environmental Policy Act of 1969, (NEPA) Pub. L. 91-190 (1970) (codified as amended at 42 U.S.C. § 4321 et seq. and the Council on Environmental Quality (CEQ) Regulations for Implementing the Procedural Provisions of NEPA, which require recipients to use all practicable means within their authority, and consistent with other essential considerations of national policy, to create and maintain conditions under which people and nature can exist in productive harmony and fulfill the social, economic, and other needs of present and future generations of Americans.

XXIV. Nondiscrimination in Matters Pertaining to Faith-Based Organizations

It is USDHS policy to ensure the equal treatment of faith-based organizations in social service programs administered or supported by USDHS or its component agencies, enabling those organizations to participate in providing important social services to beneficiaries. Recipients must comply with the equal treatment policies and requirements contained in 6 C.F.R. Part 19 and other applicable statues, regulations, and guidance governing the participations of faith-based organizations in individual USDHS programs.

XXV. Non-Supplanting Requirement

Recipients receiving federal financial assistance awards made under programs that prohibit supplanting by law must ensure that federal funds do not replace (supplant) funds that have been budgeted for the same purpose through non-federal sources.

XXVI. Notice of Funding Opportunity Requirements

All the instructions, guidance, limitations, and other conditions set forth in the Notice of Funding Opportunity (NOFO) for this program are incorporated here by reference in the award terms and conditions. All recipients must comply with any such requirements set forth in the program NOFO.

XXVII. Patents and Intellectual Property Rights

Recipients are subject to the Bayh-Dole Act, 35 U.S.C. § 200 et seq, unless otherwise provided by law. Recipients are subject to the specific requirements governing the development, reporting, and disposition of rights to inventions and patents resulting from federal financial assistance awards located at 37 C.F.R. Part 401 and the standard patent rights clause located at 37 C.F.R. § 401.14.

XXVIII. Procurement of Recovered Materials

States, political subdivisions of states, and their contractors must comply with Section 6002 of the Solid Waste Disposal Act, Pub. L. 89-272 (1965), (codified as amended by the Resource Conservation and Recovery Act, 42 U.S.C. § 6962.) The requirements of Section 6002 include procuring only items designated in guidelines of the Environmental Protection Agency (EPA) at 40 C.F.R. Part 247 that contain the highest percentage of recovered materials practicable, consistent with maintaining a satisfactory level of competition.

XXIX. Rehabilitation Act of 1973

Recipients must comply with the requirements of Section 504 of the Rehabilitation Act of 1973, Pub. L. 93-112 (1973), (codified as amended at 29 U.S.C. § 794,) which provides that no otherwise qualified handicapped individuals in the United States will, solely by reason of the handicap, be excluded from participation in, be denied the benefits of, or be subjected to discrimination under any program or activity receiving federal financial assistance.

XXX. Reporting of Matters Related to Recipient Integrity and Performance General Reporting Requirements.

If the total value of any currently active grants, cooperative agreements, and procurement contracts from all federal awarding agencies exceeds $10,000,000 for any period of time during the period of performance of this federal award, then the recipients must comply with the requirements set forth in the government-wide Award Term and Condition for Recipient Integrity and Performance Matters located at 2 C.F.R. Part 200, Appendix XII, the full text of which is incorporated here by reference in the award terms and conditions.

XXXI. Reporting Subawards and Executive Compensation Reporting of first tier subawards.

Recipients are required to comply with the requirements set forth in the government-wide award term on Reporting Subawards and Executive Compensation located at 2 C.F.R. Part 170, Appendix A, the full text of which is incorporated here by reference in the award terms and conditions.

XXXII. SAFECOM

Recipients receiving federal financial assistance awards made under programs that provide emergency communication equipment and its related activities must comply with the SAFECOM Guidance for Emergency Communication Grants, including provisions on technical standards that ensure and enhance interoperable communications.

XXXIII. Terrorist Financing

Recipients must comply with E.O. 13224 and U.S. laws that prohibit transactions with, and the provisions of resources and support to, individuals and organizations associated with terrorism. Recipients are legally responsible to ensure compliance with the Order and laws.

XXXIV. Trafficking Victims Protection Act of 2000 (TVPA) Trafficking in Persons.

Recipients must comply with the requirements of the government-wide financial assistance award term which implements Section 106 (g) of the Trafficking Victims Protection Act of 2000 (TVPA), codified as amended at 22 U.S.C. § 7104. The award term is located at 2 C.F.R. § 175.15,

the full text of which is incorporated here by reference.

XXXV. Universal Identifier and System of Award Management

Requirements for System for Award Management and Unique Entity Identifier Recipients are required to comply with the requirements set forth in the government-wide financial assistance award term regarding the System for Award Management and Universal Identifier Requirements located at 2 C.F.R. Part 25, Appendix A, the full text of which is incorporated here by reference.

XXXVI. USA PATRIOT Act of 2001

Recipients must comply with requirements of Section 817 of the Uniting and Strengthening America by Providing Appropriate Tools Required to Intercept and Obstruct Terrorism Act of 2001 (USA PATRIOT Act), which amends 18 U.S.C. §§ 175–175c.

XXXVII. Use of USDHS Seal, Logo and Flags

Recipients must obtain permission from their USDHS FAO prior to using the USDHS seal(s), logos, crests or reproductions of flags or likenesses of USDHS agency officials, including use of the United States Coast Guard seal, logo, crests or reproductions of flags or likenesses of Coast Guard officials.

XXXVIII. Whistleblower Protection Act

Recipients must comply with the statutory requirements for whistleblower protections (if applicable) at 10 U.S.C § 2409, 41 U.S.C. § 4712, and 10 U.S.C. § 2324, 41 U.S.C. §§ 4304 and 4310.

The remainder of this page is intentionally left blank.

ATTACHMENT 2
Reimbursement Checklist

DHSEM reserves the right to update this check list throughout the life of the grant to ensure compliance with applicable federal and state rules and regulations. ***Please only check the categories that apply to the reimbursement you are currently requesting.***

EQUIPMENT

- ☐ Have all invoices been included?
- ☐ Has AEL # been identified for each purchase?
- ☐ If service/warranty expenses are listed, are they only for the performance period of the grant?
- ☐ Has proof of payment been included? (e.g., canceled check, Electronic Funds Transfer (EFT) confirmation, or P-Card back up documentation which will include receipt with vendor, copy of credit card statement showing expense charged, and payment to credit card Company for that statement)

CONSULTANTS/CONTRACTORS

- ☐ Does the amount billed by consultant add up correctly?
- ☐ Has all appropriate documentation to denote hours worked been properly signed?
- ☐ Have copies of all planning materials and work product (e.g., meeting documents, copies of plans) been included? (If a meeting was held by recipient or contractor/consultant of recipient, an agenda and signup sheet with meeting date must be included).
- ☐ Has the invoice from consultant/contractor been included?
- ☐ Has proof of payment been included? (e.g., canceled check, Electronic Funds Transfer (EFT) confirmation, or P-Card back up documentation which will include receipt with vendor, copy of credit card statement showing expense charged, and payment to credit card Company for that statement).

SALARY POSITIONS (Note: this applies to positions billed under M&A)

- ☐ Have the following been provided: signed time sheet by employee and supervisor and proof that employee was paid for time worked (statement of earnings, copy of payroll check or payroll register)?
- ☐ Has a time period summary sheet been included for total claimed amount?
- ☐ Has a general ledger payroll report been included for total claimed amount? Ensure this report includes both employee and employer payroll information (i.e., benefits/contributions).
- ☐ Does the back-up documentation include a copy of the check stub per employee for the time period covered?
- ☐ Does the back-up documentation provided match the time period for which reimbursement is being requested?

OTHER:

- ☐ If EHP form needed – has copy of it and approval from USDHS/FEMA been included?

MATCHING FUNDS (IF APPLICABLE)

- ☐ Contributions are from Non-Federal funding sources.
- ☐ Contributions are from cash or in-kind contributions which may include training investments.
- ☐ Contributions are not from salary, overtime, or other operational costs unrelated to training.

This page is intentionally left blank.

ATTACHMENT 3
Glossary and Definitions

Applicant: When an entity applies for PA funding, it is the **Applicant**. Once the Applicant receives funding, it is either the **recipient, pass-through entity,** or a **sub-recipient**.

Authorized Equipment List (AEL): The Authorized Equipment List (AEL) is a list of approved equipment types allowed under FEMA's preparedness grant programs.

Backfill: The act of filling a position left by another employee who has been moved to another role.

Cost Match: Recipient or sub-recipient contribution. This can be cash (hard match) or third party in-kind (soft match). 2 C.F.R. 200.306.

Cost Sharing or Matching: The portion of project costs not paid by federal funds or contributions (unless otherwise authorized by federal statute). 2 C.F.R. 200.1 Cost sharing or matching.

Declared fire: An uncontrolled fire or fire complex, threatening such destruction as would constitute a major disaster, which the FEMA Regional Administrator has approved in response to a state's request for a fire management assistance declaration and in accordance with the criteria listed in 44 C.F.R. 204.21. Fire Management Assistance Declaration Criteria.

Disallowed costs: Those charges to a federal award that the federal awarding agency or pass-through entity determines to be unallowable, in accordance with the applicable federal statutes, regulations, or the terms and conditions of the federal award. 2 C.F.R. 200.1 Disallowed costs.

Demobilization: The process and procedures for deactivating, disassembling, and transporting back to their point of origin all resources that had been provided to respond to and support a declared fire.

Disaster: An emergency condition affecting all or part the state, overwhelming local resources, in which there is likely to be a significant recovery period. The Governor may request a Robert T. Stafford Act (Stafford Act) Disaster Declaration through FEMA, asking for the Public Assistance Program, Fire Management Assistance Program, Individual Assistance Program and Mitigation based upon known and estimated damage assessment data.

Disaster Recovery Reform Act of 2018 (DRRA): The DRRA represents the most comprehensive Emergency Management reform since the Post-Katrina Emergency Management Reform Act in 2006. It includes a larger and more reliable funding stream for pre-disaster mitigation, expanded assistance for individuals and households, and support for states, localities, tribes, and territories (SLTTs) to develop their own emergency management capabilities.

Emergency: A condition in which local and state emergency response agencies are overwhelmed by an incident to the point that federal assistance is needed. Unlike a disaster, an emergency does not have a recovery phase. The Governor may request a Stafford Act Emergency Declaration through FEMA, asking for the Public Assistance Program and/or Fire Management Assistance Grant.

Emergency Work: Work which must be done before, during and immediately after a disaster event to save lives and to protect improved property and public health and safety or to avert or lessen the threat of a major disaster. The FEMA Public Assistance emergency work Categories are:

- Category A (Debris Removal)
- Category B (Emergency Protective Measures)

Equipment: Tangible personal property (including information technology systems) having a useful life of more than one year and a per-unit acquisition cost which equals or exceeds the lesser of the capitalization level established by the non-federal entity for financial statement purposes, or $5,000. 2 C.F.R. 200.1 Equipment.

*Expenditures***:** Charges made by a non-federal entity to a project or program for which a federal award was received. 2 C.F.R. 200.1 Expenditures.

Federal Award: The federal financial assistance that a recipient receives directly from a federal awarding agency or indirectly from a pass-through entity. 2 C.F.R. 200.1 Federal award.

Federal Emergency Management Agency (FEMA): The federal agency responsible for coordinating disaster recovery efforts in partnership with state, local, and tribal governments.

Federal Share: The portion of the federal award costs that are paid using federal funds. 2 C.F.R. 200.1 Federal share.

FEMA/State Agreement: A formal, legal document between FEMA and the state or a tribal government giving the understandings, commitments, terms, conditions, and timelines for assistance resulting from a federal disaster, emergency, or fire declaration, declared by the President.

Governor's Authorized Representative (GAR): The person designated by the Governor to execute all necessary documents for disaster assistance programs on behalf of the state and local grant recipients. The GAR is responsible for state compliance with the FEMA/State Agreement. The GAR may also be designated as the State Coordinating Officer.

Hazard Mitigation: Mitigation is the effort to reduce loss of life and property by lessening the impact of disasters.

Hazard Mitigation (Sections 404 and 406): Section 406 Mitigation measures are specific to the mechanism of the declared disaster and are an integral part of the reconstructed work on a facility or will protect or benefit the repaired portion of the facility. These are different from mitigation measures that are considered for eligibility under the Hazard Mitigation Grant Program (HMGP) of Section 404 of the Stafford Act. In the HMGP program, measures are proposed that may involve facilities other than those damaged by the disaster, new facilities, or even non-structural measures such as the development of floodplain management regulations.

Incident Period: The time interval during which the declared disaster occurs. The Regional Administrator, in consultation with the Governor's Authorized Representative and the Principal Advisor will establish the incident period. Generally, costs must be incurred during the incident period to be considered eligible.

The declaration designates the incident period. The incident period is the span of time during which the federally declared incident occurs. This period varies in length, depending on the incident.

Improved Project: When performing restoration work on a damaged facility, a sub-recipient may use the opportunity to make improvements to the facility. Projects that incorporate such improvements are improved projects. The improved facility must have the same function and at least the equivalent capacity as that of the pre-disaster facility. Federal funding for improved projects is limited to the lesser of the following: the federal share of the approved estimated costs to restore the damaged facility to its pre-disaster design and function or the federal share of the actual cost of completing the improved project. The sub-recipient must obtain FEMA approval, via the NMDHSEM, for an improved project prior to

construction.

Indirect Costs: Costs a recipient or sub-recipient incurs for a common or joint purpose benefitting more than one cost objective that are not readily assignable to the cost objectives specifically benefited.

Joint Field Office (JFO): A temporary facility established in or near a declared disaster area to serve as the field headquarters for FEMA, other federal and state recovery personnel, and serve as the focal point for federal disaster operations, direction, coordination, and information.

Large Project: An approved project estimated to cost the same as or more than the large project threshold amount. The large project threshold is a dollar amount adjusted annually to reflect changes in the Consumer Price Index for all urban consumers. The large project threshold amount, applicable to all projects, is the amount in effect on the declaration date of the disaster, regardless of when project approval is made or when the work is performed.

Management Costs: Management costs are any indirect costs, any direct administrative costs, and any other administrative expenses associated with the administration of HMA awards and subawards. Management costs are provided under HMGP, HMGP Post Fire, BRIC and FMA. For the Hazard Mitigation Grant Program (HMGP) and Hazard Mitigation Grant Program Post Fire (HMGP Post Fire), recipients will be reimbursed no more than 15% of the total amount of the award, of which not more than 10% may be used by the recipient and 5% by the subrecipient. Under HMGP and HMGP Post Fire, recipients' Administrative Plans must include procedures for monitoring and reporting on subrecipient management costs before receiving funding for management costs. For Building Resilient Infrastructure and Communities (BRIC) and Flood Mitigation Assistance (FMA), recipients may apply for a maximum of 10% of the total funds requested in their application cost estimate (federal and non-federal shares) for management costs to support the sub-applications included as part of their award. Subapplicants for BRIC and FMA may apply for a maximum of 5% of the total funds requested in a sub-application for management costs. Additional information is available in FEMA Policy #104-11-1, Hazard Mitigation Grant Program Management Costs (Interim).

Pass-through Entity: A non-federal entity that provides a subaward to a sub-recipient to carry out part of a federal program. 2 C.F.R. 200.1 Pass through entity (PTE).

Performance Period for Hazard Mitigation Assistance: The period of time stipulated in the Sub-recipient Grant Agreement, as amended, during which the sub-recipient must finish the approved work. Projects completed after the active Period of Performance deadline will be considered ineligible.

Quarterly Financial Progress Report: The information in this report is used by NMDHSEM to monitor sub-recipient cash flow, performance, and project implementation to ensure proper use of federal funds.

Recipient: Formally referred to as the grantee or sub-grantee or applicant. Federally Recognized Indian Tribal Governments may also be Recipients if they so desire and if they meet FEMA requirements.

Recovery Officer: Aids in the administration of disaster recovery grant programs for statewide disasters and emergencies. Coordinates and co-administers disaster recovery grant programs, ensuring that they are implemented and carried out according to state and federal program requirements.

Recovery Unit: This is the unit within the NMDHSEM Response and Recovery Bureau designated as responsible for the programmatic administration of the FEMA PA and FMAG Programs.

Recovery Unit Manager: Responsible for administering and supervising staff responsible for federal and state disaster recovery programs and serves as the Deputy State Coordinating Officer (SCO) for

emergencies or major disaster declarations.

Response & Recovery Bureau Chief: Responsible for supervising staff responsible for federal and state disaster recovery programs and staff that provides operational response capabilities to support the citizens of New Mexico. This position also serves as State Coordinating Officer (SCO) for emergencies or major disaster declarations.

Request for Approval Form: Used by sub-recipient to request approval from NMDHSEM to expend funds for previously identified and approved projects. Approval must be received prior to expenditure.

Small Project: An approved project estimated to cost less than the large project threshold amount.

State Coordinating Officer (SCO): The person designated by the Governor to coordinate state and local disaster assistance efforts with those of the federal government. The GAR may also be the SCO. The Governor will name the GAR and the SCO in the FEMA/State Agreement.

Sub-recipient: Formally referred to as the sub-grantee or applicant, is a state agency, local government, tribal government, other legal governmental entity, or a private non-profit (PNP) organization that receives a sub-grant award and which is accountable to the state for the use of the funds provided. The FEMA reserves the final decision as to sub-recipient eligibility.

Supplanting: When a state or unit of local government reduces state or local funds for an activity specifically because federal funds are available (or expected to be available) to fund that same activity. When supplanting is not permitted, federal funds must be used to **supplement** existing state or local funds for program activities and may not replace state or local funds that have been appropriated or allocated for the same purpose. Additionally, federal funding may not replace state or local funding that is required by law. If a question of supplanting arises, the sub-recipient or grantee will be required to substantiate that the reduction in non-federal resources occurred for reasons other than the receipt or expected receipt of federal funds. US Department of Justice Office of Justice Programs, Grants 101.

The remainder of this page is intentionally left blank.

ATTACHMENT 4
Acronyms

AEL: Authorized Equipment List
AGAR: Alternate Governor's Authorized Representative
ASB: Administrative Services Bureau of NMDHSEM
CFDA: Catalog of Federal Domestic Assistance
DAC: Direct Administrative Costs
DOT: Department of Transportation
DPS: Department of Public Safety
DRRA: Disaster Recovery Refo1m Act of 2018
DSCO: Deputy State Coordinating Officer
DSIBD: Deputy State Infrastructure Branch Director
DSPAGS: Deputy State Public Assistance Group Supervisor
EMAC: Emergency Management Assistance Compact
EMMIE: Emergency Management Mission Integrated Environment
EMNRD: Energy, Minerals and Natural Resources Department
FEMA: Federal Emergency Management Agency
FFATA- Federal Funding Accountability and Transparency Act
FMAG - Fire Management Assistance Grant
GAR: Governor's Authorized Representative
IMAS: Intrastate Mutual Aid System
INF: Immediate Needs Funding
IOF: Initial Operating Facility
JFO: Joint Field Office
NSPO: Net Small Project Overrun
NMDHSEM: New Mexico Department of Homeland Security and Emergency Management
ONA: Other Needs Assistance
OMB: Office of Management and Budget
PA: Public Assistance
PAGS: Public Assistance Group Supervisor
PAPPG: Public Assistance Program and Policy Guide
PDA: Preliminary Damage Assessment
PDMG: Program Delivery Manager
PIO: Public Information Officer
PNP: Private Non-Profit
POP: Period of Performance
PW: Project Worksheet
R&R: Response & Recovery Bureau
REC: Record of Environmental Consideration
RO: Recovery Officer
RP A - Request for Public Assistance
SCO: State Coordinating Officer
SOW: Scope of Work
SHARE: New Mexico Statewide Human Resources, Accounting, and Management Reporting System

SIBD: State Infrastructure Branch Director
SPAGS: State Public Assistance Group Supervisor
SPAO: State Public Assistance Officer
USDHS: United States Department of Homeland Security
USFS: US Forest Service
VFO: Virtual Field Office

The remainder of this page is intentionally left blank.

City of Santa Fe New Mexico

Finance Department

Project Ledger Request Form

Date of Request: 09/06/24

Project Title: Ashbaugh Park Stormwater Infiltration Project

Project Type: ☑ CIP ☑ Grant ☐ Internal Tracking

Project ID: OEM2523103
Grant ID: F2513
Approved By: E.LUJAN 9/27/2024
Entered By: PL/CT (Finance Use Only)

Department: Public Works/OEM Project Manager: Zoe Isaacson/Kyle Morgan Ext: 629-2539

Project Date Range: 02/15/2024 to 02/14/2027 ☐ Create Fixed Asset

---

☑ Multi-Funding (complete all funding sources, should equal 100%)

Funding Source: Dept of Homeland Security/FEMA % of Funding: 75% - $540,263.60

MUNIS ORG: 2310411/2212850 MUNIS OBJ: 490580 Awarded Amount: $506,577/$33,687

Funding Source: Stormwater Utility Fee (Fund 231) % of Funding: 25%

MUNIS ORG: N/A MUNIS OBJ: N/A Awarded Amount: 168,858.87

Expense String Phase:

A project must have at least one phase identified, this can be used as an additional level of tracking, for example, CIP - Design, Construction, etc. For Grants can be used as reimbursable types, such as transportation, salaries.

(You can create more than one phase and you can default MUNIS ORGs and OBJs, optional)

Phase: Design MUNIS ORG: 2310411 MUNIS OBJ: 572960

Phase: Professional Contracts MUNIS ORG: 2212850 MUNIS OBJ: 510300

Phase: MUNIS ORG: MUNIS OBJ:

Contract number: Comments/Other:

GRANTS ONLY:

Grantor Name: NMDHSEM-P/T EMT2022-BR-002 Awarded Amount: 540,263.60

AR Charge Code: 2310411/2212850-490580 ☐ Grant funds multiple projects (Complete a form for each project)

Grantor Id: 700034 Federal CFDA (if applicable): 97.047

(If grants please provide all grant award documents with form) ☑ Attached Grant Documentation

2022_BRIC_SGA_Stormwater

Final Audit Report 2024-10-02

Created:	2024-10-01
By:	JULIE KENNY (jckenny@santafenm.gov)
Status:	Signed
Transaction ID:	CBJCHBCAABAAOXnMZJgFIHoQ0NQyWEge3pZwuP0ceQV8

"2022_BRIC_SGA_Stormwater" History

Document created by JULIE KENNY (jckenny@santafenm.gov)
2024-10-01 - 11:53:31 PM GMT- IP address: 63.232.20.2

Document emailed to Rebecca Mnuk-Herrmann (ramnukherrmann@santafenm.gov) for signature
2024-10-01 - 11:54:16 PM GMT

Email viewed by Rebecca Mnuk-Herrmann (ramnukherrmann@santafenm.gov)
2024-10-02 - 1:31:55 AM GMT- IP address: 73.228.44.222

Document e-signed by Rebecca Mnuk-Herrmann (ramnukherrmann@santafenm.gov)
Signature Date: 2024-10-02 - 1:32:31 AM GMT - Time Source: server- IP address: 73.228.44.222

Agreement completed.
2024-10-02 - 1:32:31 AM GMT

Powered by Adobe Acrobat Sign

BRIC_2022_Stormwater_Council_Packet_2024-10-21

Final Audit Report 2024-11-01

Created:	2024-10-30
By:	Justin Gonzales (jmgonzales@santafenm.gov)
Status:	Signed
Transaction ID:	CBJCHBCAABAA5yePzQ2dVA9dubnDj89TMAnHBCoWau3U

"BRIC_2022_Stormwater_Council_Packet_2024-10-21" History

Document created by Justin Gonzales (jmgonzales@santafenm.gov)
2024-10-30 - 4:23:41 PM GMT- IP address: 63.232.20.2

Document emailed to BRIAN WILLIAMS (bgwilliams@santafenm.gov) for signature
2024-10-30 - 4:30:32 PM GMT

Email viewed by BRIAN WILLIAMS (bgwilliams@santafenm.gov)
2024-10-30 - 5:02:29 PM GMT- IP address: 104.47.65.254

Document e-signed by BRIAN WILLIAMS (bgwilliams@santafenm.gov)
Signature Date: 2024-10-30 - 5:03:22 PM GMT - Time Source: server- IP address: 63.232.20.2

Document emailed to rawheeler@santafenm.gov for signature
2024-10-30 - 5:03:26 PM GMT

Email viewed by rawheeler@santafenm.gov
2024-10-31 - 5:08:29 PM GMT- IP address: 104.47.65.254

Signer rawheeler@santafenm.gov entered name at signing as RW
2024-10-31 - 5:08:44 PM GMT- IP address: 63.232.20.2

Document e-signed by RW (rawheeler@santafenm.gov)
Signature Date: 2024-10-31 - 5:08:46 PM GMT - Time Source: server- IP address: 63.232.20.2

Document emailed to HENRI HAMMOND-PAUL (hmhammondpaul@santafenm.gov) for signature
2024-10-31 - 5:08:48 PM GMT

Email viewed by HENRI HAMMOND-PAUL (hmhammondpaul@santafenm.gov)
2024-10-31 - 5:26:22 PM GMT- IP address: 104.47.64.254

Powered by Adobe Acrobat Sign

Document e-signed by HENRI HAMMOND-PAUL (hmhammondpaul@santafenm.gov)
Signature Date: 2024-10-31 - 5:26:33 PM GMT - Time Source: server- IP address: 63.232.20.2

Document emailed to mtbonifer@santafenm.gov for signature
2024-10-31 - 5:26:35 PM GMT

Email viewed by mtbonifer@santafenm.gov
2024-10-31 - 9:47:25 PM GMT- IP address: 104.47.65.254

Signer mtbonifer@santafenm.gov entered name at signing as Matthew Bonifer
2024-10-31 - 9:47:59 PM GMT- IP address: 63.232.20.2

Document e-signed by Matthew Bonifer (mtbonifer@santafenm.gov)
Signature Date: 2024-10-31 - 9:48:01 PM GMT - Time Source: server- IP address: 63.232.20.2

Document emailed to ajhopkins@santafenm.gov ajhopkins@santafenm.gov (ajhopkins@santafenm.gov) for signature
2024-10-31 - 9:48:03 PM GMT

Email viewed by ajhopkins@santafenm.gov ajhopkins@santafenm.gov (ajhopkins@santafenm.gov)
2024-10-31 - 11:24:04 PM GMT- IP address: 104.47.65.254

Document e-signed by ajhopkins@santafenm.gov ajhopkins@santafenm.gov (ajhopkins@santafenm.gov)
Signature Date: 2024-10-31 - 11:25:16 PM GMT - Time Source: server- IP address: 63.232.20.2

Document emailed to EMILY OSTER (ekoster@santafenm.gov) for signature
2024-10-31 - 11:25:18 PM GMT

Email viewed by EMILY OSTER (ekoster@santafenm.gov)
2024-11-01 - 5:40:44 PM GMT- IP address: 104.47.64.254

Document e-signed by EMILY OSTER (ekoster@santafenm.gov)
Signature Date: 2024-11-01 - 5:46:15 PM GMT - Time Source: server- IP address: 63.232.20.2

Agreement completed.
2024-11-01 - 5:46:15 PM GMT

CITY OF SANTA FE

Date: October 30, 2024

To: Governing Body

Via: Regina Wheeler, Public Works Director RW (Oct 30, 2024 11:03 MDT)
Henri Hammond-Paul, Community Health and Safety Director HENRI HAMMOND-PAUL (Oct 31, 2024 09:35 MDT)

From: **Brian Williams, Office of Emergency Management Director** BRIAN WILLIAMS (Oct 30, 2024 11:02 MDT)

Subject: **Hazard Mitigation Grant Program (HMGP) Grant Approval – Arroyo De Los Pinos Bio-Infiltration Basins Design**

ITEM AND ISSUE:
Request Approval of the 2023 Hazardous Mitigation Grant Program (HMGP) Sub-Grant Agreement DR-5430-0012-NM in the total amount of $364,820.91 with the New Mexico Department of Homeland Security and Emergency Management for Bio-Infiltration Basin Design at Marc Brandt Park. Brian Williams, Director Office of Emergency Management, bgwilliams@santafenm.gov.

Request Approval of a New Mexico Match Fund Grant 24-ZI5044-MG25-085 in the total amount of $87,740.41 with the New Mexico Department of Finance and Administration for Federal Grant Match Funding. Brian Williams, Director Office of Emergency Management, bgwilliams@santafenm.gov.

Request Approval of a FY25 BAR to Budget $350,961.66 in Awarded Federal Grant Funds to Stormwater WIP Design, $13,859.25 in Awarded Federal Grant Funds for Subrecipient Management Costs into Emergency Management Professional Contracts, and $87,740.41 in Awarded State Grant Funds to Stormwater WIP Design.

Action Requested: Grant Approval (2), BAR Approval

BACKGROUND AND SUMMARY:
The City of Santa Fe applied for this reimbursable grant through the United States Department of Homeland Security and Emergency Management (DHSEM) and the Federal Emergency Management Agency (FEMA). The Hazard Mitigation Grant Program (HMGP) supports states, local communities, tribes and territories as they undertake hazard mitigation projects, reducing the risks they face from disasters and natural hazards.

The Office of Emergency Management and the Parks and Open Space Division collaborated to secure this grant for conducting an engineering drainage analysis, green stormwater infrastructure and landscape design for bio-infiltration basins along the Siringo Rd corridor at Marc Brandt Park. The infiltration basins will provide infiltration, passive reuse and water conservation resulting in flood mitigation and a high-quality public open space for low-income communities. In addition, these basins will provide a "first flush" primary treatment of stormwater and decrease pollutant loads at the point of discharge into the Arroyo de Los Pinos.

The Office of Emergency Management applied for matching funds to cover the local share through the New Mexico Department of Finance and Administration (DFA) after receiving the federal grant award.

This Hazard Mitigation Grant Program grant provides a 75% federal share of $350,960.66 and requires a 25% local share of $87,740.41 which will be provided through the New Mexico Match Fund.

The HGMP grant amount also includes a 100% federally funded Subrecipient Management Costs $13,859.25 to assist with capacity in managing the grant.

The Office of Emergency Management will manage these grants, while the Parks and Open Space Division will manage the project.

The term of the grant ends on January 25, 2027.

PROCUREMENT METHOD:
Not applicable. Grant approval only.

Supporting Information:

CONTRACT NUMBER:
The FY25 Project ledger number is OEM2523102

SOURCE/REVENUE: ☐Expense ☒Revenue

The Federal funding source (not including sub-recipient management costs) is:
Fund Name/Number: Stormwater/Fund 231
Munis Org Name/Number: Stormwater/2310411
Munis Object Name/Number: Fed Grant (FEMA)/490580

The Federal funding source (sub-recipient management costs only) is:
Fund Name/Number: Emergency Services/Fund 221
Munis Org Name/Number: Emergency Management/2212850
Munis Object Name/Number: Fed Grant (FEMA)/490580

The Local funding source is:
Fund Name/Number: Stormwater/Fund 231
Munis Org Name/Number: Stormwater/2310411
Munis Object Name/Number: State Grant (DFA)/490210

List grant award number*: DR-540-0012-NM (Federal) / 24-ZI5044- MG25-085 (State)*

Grant Manager / Accounting Officer Approval: Matthew Bonifer Matthew Bonifer (Oct 31, 2024 10:34 MDT) **Date:** 10/31/2024
Comment/Exceptions: _____

Project Ledger #: OEM2523102

Budget Officer Approval: Andy Hopkins **Date:** 10/31/2024
Comment/Exceptions: _____

CAPITAL ASSET (will this procurement result in a tangible item that costs more than $5,000?):

☐Yes | ☒ No

 # (if known): _____

Repair or Replacement of Existing Equipment:

☐Yes | ☒ No
If yes -> ☐Repair | ☐ Replacement

Please explain: _____

Capital Project:
(New and improvement projects that are going to cost $10,000 or more)
☐ Yes | ☒ No

Project Ledger #: OEM2523102

Anticipated length of project: _____

Asset Manager Approval: _____ **Date:** _____
Comment/Exceptions: _____

Department Approvals:
IT Components: ☐ **Yes** | ☒ **No**
Vehicles: ☐ **Yes** | ☒ **No**
Facilities, Furniture, Fixtures, Equipment: ☐ **Yes** | ☒ **No**

Approval: _____ **Title:** _____ **Date**: _____
Approval: _____ **Title:** _____ **Date**: _____
Comment & Exceptions: _____

Department Contract Administrator Contact Info:
Justin Gonzales, jmgonzales@santafenm.gov.

ATTACHMENTS:

1. Budget Amendment Resolution
2. NM Match Fund Grant Agreement
3. Sub-Recipient Grant Agreement (Federal)
4. Project Ledger

Log # *{Finance use only}*:	
Journal # *{Finance use only}*:	

City of Santa Fe, New Mexico
BUDGET AMENDMENT RESOLUTION (BAR)

DEPARTMENT / DIVISION NAME	DATE
Public Works / Stormwater CIP	9/11/2024

ITEM DESCRIPTION	ORG	OBJECT	PROJECT	INCREASE	DECREASE
EXPENDITURES				*{enter as positive #}*	*{enter as negative #}*
WIP DESIGN - Arroyo de Los Pinos Bioinfiltration Basins	2310411	572960	OEM2523102-Design	350,963	
PROFESSIONAL CONTRACTS	2212850	510300	OEM2523102-ProfContracts	13,859	
REVENUES				*{enter as negative #}*	*{enter as positive #}*
FEMA - Arroyo de Los Pinos Bioinfiltration Basins	2310411	490580	OEM2523102	(263,222)	
DFA - Arroyo de Lost Pinos Bioinfiltration Basins	2310411	490210	OEM2523102	(87,741)	
Federal Emergency Management Agency (GRANT)	2212850	490580	OEM2523102	(13,859)	
				$ -	$ -

JUSTIFICATION: *(use additional page if needed)*
--Attach supporting documentation/memo

FY 25 budget increase for subrecipient grant award: DR-5430-0012-NM: FEMA Hazard Mitigation Grant for Arroyo de Los Pinos Bioinfiltration Basins at the Arroyo de Los Pinos in the amount of $263,222 for Design and $13,859 for Management Costs.

Expires 01/25/2027

FY 25 budget increase for Department of Finance and Administration State Matching Grant in the amount of $87,741 to cover 25% local match requirement of FEMA Grant (DR-5430-0012-NM). Expires 06/25/2027.

{Complete section below if BAR results in a net change to ANY Fund}

Fund(s) Affected	Fund Balance Increase/(Decrease)
TOTAL:	**0**

Kyle Morgan — 9/11/2024
Prepared By *{print name}* — Date

Division Director Signature *{optional}* — Date

HENRI HAMMOND-PAUL (Oct 31, 2024 09:35 MDT) 10/31/2024
Department Director Signature — Date

{Use this form for Finance Committee/ City Council agenda items ONLY}

CITY COUNCIL APPROVAL

City Council Approval Date:

Agenda Item #:

Andy Hopkins — 10/31/2024
Budget Officer — Date

Finance Director *{≤ $5,000}* — Date

City Manager *{≤ $60,000}* — Date

New Mexico
Department *of* Finance
and Administration

407 Galisteo St,
Santa Fe, NM 87501
(505) 827-4985

Governor Michelle Lujan Grisham
Cabinet Secretary Wayne Propst

Infrastructure Planning & Development Division
Wesley Billingsley, Division Director

RECIPIENT:

City of Santa Fe

APPROPRIATION NUMBER:	ALLOCATION AMOUNT:	REVERSION DATE:
24-ZI5044- MG25-085	$87,740.41	Six (6) months after the end date of the associated federal grant's period of performance.

ALLOCATION PURPOSE

$87,740.41 for costs to meet cost sharing requirements City of Santa Fe – Arroyo De Los Pinos Bio-Infiltration basins Advance Assistance. Funds unexpended by the date specified in the period of performance terms of your federal grant agreement, will be reverted to the State of New Mexico within 6 months of the federal grant closeout.

ALLOCATION DISBURSEMENT

100% of the allocated funds will be disbursed upon execution of the agreement. The Allocation Recipient agrees to submit Annual reports using Exhibit A, Match Fund Annual Report Form, providing updates on the status of the expenditures from this appropriation. The Recipient also understands and agrees to use the allocated funds in accordance with the New Mexico Match Fund Policy.

CERTIFICATION

I hereby certify that City of Santa Fe

1. Will only use the allocated funds to carry out and/or perform activities described in allocation language.
2. Will submit annual reporting through the Match Fund Annual Report link.
3. Will adhere to the Match Fund policy.
4. Will adhere to the provisions of Attachment A- Special Provisions

John Blair
John Blair (Nov 1, 2024 12:44 MDT)

City Manager, City of Santa Fe — 11/01/2024 Date

Emily K. Oster

Finance Director, City of Santa Fe — 11/01/2024 Date

PUBLICITY

Any Publicity regarding this agreement must not be released without prior written approval from the DFA. For purposes of this agreement, "Publicity" means notices, informational pamphlets, press releases, email response, research, reports, signs, and similar public notices prepared by or for the Subrecipient or jointly with others. The Recipient shall not issue, without consent of the DFA, any press release, or make any public announcement with respect to this agreement. In the performance of responsibilities under this agreement, the Recipient agrees to obtain approval of the DFA in advance with respect to all Public Relations, all communications with media, or all communications with any other member of the public with respect to this agreement, except to acknowledge that an agreement does exist. For purposes of this agreement, "Public Relations" includes community relations and means those activities dedicated to maintaining the image of the DFA or maintaining or promoting understanding and favorable relations with the community or public at large or any segment of the public. For violations of this provision, as determined solely by the DFA, the DFA reserves the right to terminate this agreement.

New Mexico
Department *of* Finance
and Administration

407 Galisteo St,
Santa Fe, NM 87501
(505) 827-4985

Governor Michelle Lujan Grisham
Cabinet Secretary Wayne Propst

Infrastructure Planning & Development Division
Wesley Billingsley, Division Director

APPROVAL

In accordance with the authority conferred on the Department of Finance & Administration by the statute appropriating these funds, I hereby approve this certification for MG25-085 in the amount of $87,740.41.

Wesley Billingsley
Director, Infrastructure Planning & Development Division

Date

New Mexico
Department *of* Finance
and Administration

407 Galisteo St,
Santa Fe, NM 87501
(505) 827-4985

Governor Michelle Lujan Grisham
Cabinet Secretary Wayne Propst

Infrastructure Planning & Development Division
Wesley Billingsley, Division Director

OPTIONAL ATTACHMENT A
SPECIAL CONDITIONS

The grant award requires grantees' accounting methods and procedures, including their internal control framework, to be scrutinized, so as to safeguard State appropriations and assets acquired with such appropriations. This Matching Grant Special Grant Condition(s) **Attachment A** is necessary pursuant to Executive Order 2013-006 (2.A.2.a-c, if applicable), due to the Grantees' material weaknesses, significant deficiencies, or findings that raised concerns as to the ability to expend grant funds in accordance with applicable law in the organization's FY23 audit. The Special Conditions identified below apply to the authorized agent, City of Santa Fe.

Procurement - All purchases or contracts the Grantee enters that shall use funding from the Department capital appropriations grant must be approved by the Department prior to the initiation of implementing purchasing documents. The Grantee shall receive such prior approval via official correspondence from the Department, which may be through letter or email. The Grantee shall submit the following to the Department in pursuit of prior approval: purchasing policies and procedures, CFO certification, documentation of management and program approval, policies and procedures governing purchasing and contracting, a copy of the current procurement and contracting policies, and documentation regarding informing staff responsible for purchasing and contracting on such policies and procedures.

Cash Management – policies and procedures on cash management of federal funds. Provide procedures used to draw and disburse federal funds. Provide procedures to reconcile draw amounts, deposits and disbursements; and to prepare federal cash reporting documents to ensure compliance with federal regulations.

The City of Santa was required to and has provided sufficient documentation regarding procurement and cash management as referenced in the City of Santa Fe's FY23 Audit file. Therefore, the criteria to enter into this agreement have been met.

_____ _____

Wesley Billingsley
Director, Infrastructure Planning & Development Division

Date

New Mexico
Department *of* Finance
and Administration

407 Galisteo St,
Santa Fe, NM 87501
(505) 827-4985

Governor Michelle Lujan Grisham
Cabinet Secretary Wayne Propst

Infrastructure Planning & Development Division
Wesley Billingsley, Division Director

Exhibit A

Appropriation Recipient: _____

Appropriation Number: _____

Use of Appropriation Funds	**Amount**
Personnel Expenses	$ 0.00
Contract Expenses	$ 0.00
Other Expenses	$ 0.00
Total Amount of Appropriation Funds Expended	$ 0.00

Narrative *Describe the outcomes, results, benefit, and or uses of the appropriation funds*

IN WITNESS WHEREOF, the City of Santa Fe has agreed to this Grant Award as of the date of the signature by the required approval authorities below.

ATTEST:

_____
GERALYN CARDENAS, INTERIM CITY CLERK

CITY ATTORNEY'S OFFICE:

Oct 14, 2024
_____
REBECCA MNUK-HERRMANN, ASSISTANT CITY ATTORNEY

Match Fund Grant Agreement MG25-85 with CoSF signature page

Final Audit Report 2024-10-14

Created:	2024-10-08
By:	Amy Cawthon (amcawthon@santafenm.gov)
Status:	Signed
Transaction ID:	CBJCHBCAABAAZGQblCr7sFpbEgtyiD4R0lUnGVLDNmWf

"Match Fund Grant Agreement MG25-85 with CoSF signature page" History

Document created by Amy Cawthon (amcawthon@santafenm.gov)
2024-10-08 - 5:30:23 PM GMT- IP address: 63.232.20.2

Document emailed to Rebecca Mnuk-Herrmann (ramnukherrmann@santafenm.gov) for signature
2024-10-08 - 5:30:55 PM GMT

Email viewed by Rebecca Mnuk-Herrmann (ramnukherrmann@santafenm.gov)
2024-10-14 - 9:59:52 PM GMT- IP address: 174.240.19.127

Document e-signed by Rebecca Mnuk-Herrmann (ramnukherrmann@santafenm.gov)
Signature Date: 2024-10-14 - 10:00:20 PM GMT - Time Source: server- IP address: 174.240.19.127

Agreement completed.
2024-10-14 - 10:00:20 PM GMT

Powered by Adobe Acrobat Sign

State of New Mexico
DEPARTMENT OF HOMELAND SECURITY & EMERGENCY MANAGEMENT
P.O. Box 27111
Santa Fe, NM 87502

SUB-RECIPIENT GRANT AGREEMENT
HAZARD MITIGATION GRANT PROGRAM

CFDA 97.039 : Hazard Mitigation Grant Program Post-Fire

1. SUB-GRANT NO.	2. SUB-RECIPIENT NAME	3. PROJECT NAME
DR-5430-0012-NM	City of Santa Fe	City of Santa Fe – Arroyo De Los Pinos Bio-Infiltration basins Advance Assistance

4. STATE DFA VENDOR NUMBER	5. EIN NUMBER	6. SAM UEI NUMBER	7. CAGE CODE
54360	85-6000168	QLN2YKMMJ8X6	4C987

8. SUB-RECIPIENT PHYSICAL ADDRESS	9. SUB-RECIPIENT REMIT ADDRESS
200 Lincoln Ave Santa Fe, NM 87501	-

10. DHSEM CONTACT NAME:	11. CONTACT DESK PHONE:	225-313-1774
Natalie West	CONTACT EMAIL ADDRESS:	DHSEM.mitigation@dhsem.nm.gov cc: natalie.west@dhsem.nm.gov

12a. PERFORMANCE PERIOD START DATE	07/26/2024	12b. PERFORMANCE PERIOD END DATE	01/25/2027

13. TOTAL AWARD AMOUNT:	$364,820.91

13a. FEDERAL SHARE	13b. LOCAL SHARE	13c. STATE SHARE
$277,080.50	$87,740.41	$0.00

	14a. NAME OF PROJECT AWARD	14b. FEDERAL SHARE	14c. NON-FEDERAL SHARE
1	Arroyo De Los Pinos Bio-Infiltration	$263,221.25	$87,740.41
2	Sub-Recipient Management Costs	$13,859.25	$
TOTAL AMOUNT OF PROJECT		$277,080.50	$87,740.41

WHEREAS The State of New Mexico will serve as the "pass-through entity" with respect to the State's role in providing sub-awards and administering grant assistance provided to sub-recipients and may, subject to a Memorandum of Agreement, directly support project development and administration.

WHEREAS funding has been obligated from the Federal Emergency Management Agency pursuant to a request by the applicant, The Sub-Recipient, City of Santa Fe.

NOW, THEREFORE, it is mutually understood and agreed between the recipient NMDHSEM, and **City of Santa Fe**, hereinafter referred to as "sub-recipient," as follows:

ARTICLE 1: REQUIREMENTS AND ASSURANCES

A. The sub-recipient hereby agrees that the performance period for the grant identified on Page 1, Box 1. is consistent with the performance period identified on Page 1, Box 12a. and 12b. This Sub-recipient Grant Agreement, as amended, shall remain open for administrative purposes if necessary to achieve final payment and financial reconciliation.

B. The sub-recipient hereby agrees that the sub-recipient official signing this Sub-recipient Grant Agreement certifies that all financial expenditures, including all supporting documents submitted for reimbursement, have been incurred by the sub-recipient and are eligible and allowable expenditures consistent with the guidelines for this award. The sub-recipient agrees to follow reasonable professional standards in all financial management and bookkeeping procedures necessary to carry out this agreement.

C. The sub-recipient hereby agrees that no member, officer, or employee of the sub-recipient organization, or its designees or agents, no member of the governing body of the locality in which the program is situated, and no other public official of such locality or localities who exercises any functions or responsibilities with respect to the program during his or her tenure or for one year after that, shall have any interest, direct or indirect, in any contract or subcontract, or the process thereof, for work to be performed in connection with this Sub-recipient Grant Agreement; the sub-recipient shall incorporate in all such contracts a provision prohibiting such interest pursuant to the purposes of this Sub-recipient Grant Agreement.

D. The sub-recipient hereby agrees that it understands and agrees that it cannot use any federal funds, either directly or indirectly, in support of the enactment, repeal, modification, or adoption of any law, regulation, or policy, at any level of government, without the express written approval of the State of New Mexico or FEMA.

E. The sub-recipient hereby agrees that FEMA reserves a royalty-free, non-exclusive, and irrevocable license to reproduce, publish, or otherwise use and authorize others to use, for federal government purposes: (1) the copyright in any work developed under this Sub-recipient Grant Agreement; and (2) any rights of copyright to which the sub-recipient purchases ownership with federal support. The sub-recipient agrees to consult with FEMA through NMDHSEM regarding allocating any patent rights that arise from or are purchased with this funding.

F. The sub-recipient hereby agrees that signatures of the sub-recipient officials on this Sub-recipient Grant Agreement attest to the sub-recipient's understanding, acceptance, and compliance with Lobbying, Debarment, Suspension, and Other Responsibility Matters; Drug- free Workplace; Conflict of Interest, and Non-Supplanting certifications. Federal funds will not be used to supplant state or local funds. Federal funds will be used to supplement existing sub-recipient funding to augment program activities and not replace those funds which have been appropriated in the budget for the

same purpose.

G. The sub-recipient hereby agrees that their accounting system allows for the separation of fund sources. Funding provided under this Sub-recipient Grant Agreement cannot be commingled with funds from other federal, state, or local agencies, and each project must be accounted for separately.

H. The sub-recipient hereby agrees that it shall comply with applicable Federal Civil Rights Laws and Regulations: Title VI of the Civil Rights Act of 1964, Section 504 of the Rehabilitation Act of 1973, Title IX of the Education Amendments of 1972, Age Discrimination Act of 1975, and Americans with Disabilities Act of 1991. The sub-recipient will take reasonable steps to ensure Limited English Proficient (LEP) persons have meaningful access to its programs and activities. Executive Order 13379 Individuals with Disabilities in Emergency Preparedness, requires the government to support safety and security for individuals with disabilities in situations involving disasters, including earthquakes, tornadoes, fires, floods, hurricanes, and acts of terrorism.

I. The sub-recipient hereby certifies that for its employees, it has an Affirmative Action Plan/Equal Employment Opportunity Plan (EEOP) if not exempted by the Federal Government or New Mexico rule or statute. An EEOP is not required for sub-recipients of less than $25,000 or fewer than 50 employees.

J. The sub-recipient hereby certifies that its employees are eligible to work in the United States as verified by Form I–9, Immigration & Naturalization Service Employment Eligibility.

K. The sub-recipient hereby agrees that it is the responsibility of the sub-recipient to fully understand and comply with the requirements of the following, where such requirements apply to the sub-recipient set forth in:

1. 2 C.F.R. § 200: Code of Federal Regulations
2. 44 C.F.R. parts 7, 9, 10, 13, 14, 17, 18, 25, 206, 220, 221, 44 C.F.R. Part 209, 2 C.F.R. Part 200 and any other applicable FEMA policy memoranda and guidance documents
3. FEMA Hazard Mitigation Assistance Program and Policy Guide
4. New Mexico State Procurement Code
   New Mexico Administrative Code Title 2 – Public Finance https://www.srca.nm.gov/nmac-home/nmac-titles/title-2-public-finance/

ARTICLE 2: REIMBURSEMENT OF FUNDS

The NMDHSEM will apply the following procedures for making payments to sub-recipients:

A. Payment of Funds, General: Once FEMA has obligated funds and NMDHSEM has budgeted and encumbered those funds, the Cabinet Secretary is authorized to advance funds, as permissible, and to consider requests for payments for progress and completion based on proper review and approvals, in accordance with the sub-grant agreement or amendment as described below. Review and audit of expending and accounting of federal awards and state funds will be conducted to ensure records, reports, and documentation for compliance and tracing of funds are accounted for; 2 C.F.R. §§ 200.302(b)(6), 200.305(a). The State Department of Finance and Administration (DFA) may require additional supporting data and documents prior to disbursement of funds.

B. Reimbursement shall be based upon authorized and allowable expenditures consistent with the project narrative, grant guidelines, and timely submission of Financial and Performance Progress Reports. Reimbursement of expenditures shall be requested quarterly or monthly if need be for

expenditures within the performance period. A minimum of 25% (of the total project cost) in the non-federal match must be included on each request for reimbursement. All expenditures must be supported with source documentation (e.g., copies of proof of payment, invoices, receipts, timesheets with name/rate/hours and certified, breakdown of expenditures based on FEMA approved budget, warrants, a brief description of work done, required deliverables, etc.). Request for reimbursement will not be processed if quarterly financial or performance reports are delinquent. The final payment of 15% will not be made until DHSEM verifies that all activities are complete. All payments shall be made on an actual cost reimbursement basis.

C. Contracts: All requests for proposals/bids, sole–source procurements, single vendor responses to a competitive bid, and contracts require DHSEM pre–approval prior to implementation. The relevant contract must accompany requests for reimbursement for contractual services.

D. Local Match: Local matching funds must clearly support the source, the amount, and the timing of all matching contributions. When requesting reimbursement, the match percentage must be shown on each invoice. Copies of proof of payment, invoices, receipts, purchase orders, timesheets with name/wage/hours, cost allocation, general ledger, warrants, etc., must be submitted as a backup for the match.

E. Non-reimbursable Expenses:

- Transfer of funds between any programs. Contracts, single vendor response to a competitive bid, sole source contracts, and any procurement documentation not pre-approved by DHSEM.
- Training and related travel costs not pre-approved by DHSEM.
- Supplanting (using federal funds to purchase items previously budgeted for with state or local funds).
- Maintenance and/or wear and tear costs of general use vehicles and emergency response apparatus.
- Equipment purchased for an exercise cannot be used for permanent installation and/or beyond the scope of an exercise.
- Weapons and ammunition.
- Entertainment and sporting events
- Personal items such as laundry, personal hygiene items, magazines, in-room movies, personal travel, and personal phone calls.
- Travel insurance, visa, and passport charges.
- Lodging costs in excess of State per diem, as appropriate.
- Lunch when travel is wholly within a single day.
- Standalone working meals.
- Bar charges, alcoholic beverages.
- Finance, late fees, or interest charges.
- Lobbying, political contributions, and legislative liaison activities.
- Organized fundraising, including salaries of persons while engaged in these activities.
- Expenditures not supported with appropriate documentation when submitted for reimbursement. Only properly documented expenditures will be processed for payment. Unsupported expenditures will be returned to the jurisdiction for resubmission.

F. **Payment Conditions.** The sub-recipient must certify that in requesting and accepting a sub-grant payment, they have spent those funds on eligible expenditures; that the work performed was within the scope of work allowed for specific projects; and that all records pertinent to specific projects will be retained for at least the periods required under record retention regulation requirements from the closeout of the last project. The period of record retention for grant and financial data is three years if state funds are paid.

G. Delays and Denial of Payment. Reasons for delays in FEMA processing of payment requests include, but are not limited to, the following:

- Vendor identification number is missing or incorrect;
- Disaster and project number is missing;
- Period of performance (POP) listed is incorrect;
- Service delivery dates do not agree with invoices or outside of contract period;
- Dollar amount on forms do not agree;
- Mathematical errors;
- Full address of sub-grantee is not included;
- Sub-recipient did not provide required back-up documentation; or

Reasons for NMDHSEM declining payment requests include, but are not limited to, the following:

- The POP has expired;
- The amount exceeds the remaining funding available for disbursement prior to the final financial and program compliance reviews (the hold or funding retention amount);
- Request for payment requires a state and/or budget amendment, and cannot be processed until the amendment request is received/approved;
- The reimbursement requested is for an activity outside of the approved scope of work;
- Forms are not signed by an authorized person, or are signed by only one signatory;
- Reimbursement of awarded funds have been suspended due to a non-compliance issue such as failure to submit quarterly reports; or
- Reimbursements of awarded funds have been suspended due to noncompliance activities.

Sub-recipients can reduce the likelihood of delays in processing of payment requests by checking for accuracy prior to submission.

ARTICLE 3: AUDITING AND REPORTING REQUIREMENTS

A. Quarterly Reports. In accordance with 2 C.F.R. § 200.328, the Applicant shall submit quarterly reports to the NMDHSEM beginning with the first full quarter after the signature date on the Sub-recipient Grant Agreement. The NMDHSEM will provide sub-recipient a form for this report. Quarterly reports are due no later than the 15th of the month following the end of the quarter - January 15, April 15, July 15, and October 15.

In order that NMDHSEM may adequately evaluate the progress and status of each sub-grant, quarterly reports shall contain a description of the work accomplished to date, the methods and procedures used, the anticipated completion date, a summary of all project costs to date, and other such information as may be of assistance in its evaluation of the project.

Reports shall be sent to the Department of Homeland Security & Emergency Management, Recovery Unit, P.O. Box 27111, Santa Fe, NM 87502, or electronically to DHSEM.mitigation@dhsem.nm.gov.

B. Additional Reporting Requirements. The sub-recipient must immediately report in writing to the NMDHSEM Mitigation Unit any alleged acts or allegations of fraud or misappropriation of funds for work authorized under this Sub-recipient Grant Agreement. This extends to reporting any legal action, lawsuit, bankruptcy, or other action that may jeopardize the successful completion of any authorized project. Additional reporting and financial reconciliation requirements may also be requested at NMDHSEM and FEMA's request. Failure to comply with these requests may jeopardize funding and may be a breach of this Sub-recipient Grant Agreement.

C. Enforcement. The NMDHSEM may suspend drawdowns, impose other special conditions, or take other authorized action pursuant to 2 C.F.R. § 200.339 (Remedies for Noncompliance) if the sub-recipient does not submit accurate and timely reports. This may include, among other things, the administrative closeout of a grant and/or any projects under a grant when the sub-recipient is not responsive to reasonable efforts NMDHSEM makes to collect required reports needed to complete closeout. Administrative closeout is a unilateral mechanism by NMDHSEM to move forward with project or grant closeout using available grant information in lieu of final reports. This can require NMDHSEM to make cash or cost adjustments and ineligible cost determinations, which may result in identifying a debt owed to FEMA and/or NMDHSEM.

D. Financial Procedures. The sub-recipient agrees to maintain financial procedures and support documents and to establish and maintain a proper accounting system to record expenditures of disaster assistance funds in accordance with generally accepted accounting principles or as directed by the Governor's Authorized Representative, to account for the receipt and expenditure of funds under this Agreement. If applicable, RECIPIENT / SUBGRANTEE shall conduct audit(s) pursuant to the Single Audit Act of 1984, 31 U.S.C. § 7501 et. seq., 44 C.F.R. Part 14, 2 C.F.R. Part 200, 0MB Circular A-133, "Audits of States, Local Governments, and Non-profit Organizations," and applicable New Mexico laws, rules and regulations. Further, sub-recipient must provide a hard copy of the Single Audit Report within sixty (60) days of the close of its fiscal year. Otherwise, pursuant to 44 C.F.R. § 13.43, NMDHSEM may withhold or suspend payments under any grant award.

The sub-recipient shall retain all financial records, supporting documents, statistical records, and any other documents pertinent to this contract for a period of five years after the date of submission of the final expenditures report. However, if litigation or an audit has been initiated prior to the expiration of the three-year period, the records shall be retained until the litigation or audit findings have been resolved.

E. Authorizing Statute. This award is made under the provisions of the Robert T. Stafford Disaster Relief and Emergency Assistance Act, Pub. L. No. 93-288 (1974) (codified as amended at 42 U.S.C. §§ 5121-5207) (Stafford Act), in accordance with 44 C.F.R. § 206.44.
All scopes of work and costs approved as a result of this Sub-recipient Grant Agreement, whether as estimates or final costs approved through subawards, PWs, or otherwise, will incorporate by reference the terms of this Sub-recipient Grant Agreement and must comply with applicable laws, regulations, policy, and guidance in accordance with this Sub-recipient Grant Agreement.

Pursuant to Executive Order 13858 Strengthening Buy-American Preferences for Infrastructure Projects, FEMA encourages recipients to use, to the greatest extent practicable and consistent with the law, iron and aluminum as well as steel, cement, and other manufactured products produced in the United States in Public Assistance and HMGP eligible public infrastructure repair and construction projects affecting surface transportation, ports, water resources including sewer and drinking water, and power. Such preference must be consistent with the law, including cost and contracting requirements at 2 C.F.R. Part 200.

F. Additional Terms and Conditions. The following additional sub-grant agreement documents are fully incorporated into this Sub-recipient Grant Agreement and thereby constitute additional terms and conditions of this agreement.

- The Stafford Act, its implementing regulations contained in Title 44 of the C.F.R., and FEMA policy and guidance.
- **Hazard Mitigation Assistance Guide (March 2023)**
- The Uniform Administrative Requirements, Cost Principles, and Audit Requirements for Federal Awards set forth at 2 C.F.R. Parts 200 and 3002.

- Attachment 1 United States Department of Homeland Security (USDHS) Standard Terms and Conditions (January 24, 2022) in effect on the date of the Declaration which are incorporated by reference into this Sub-recipient Grant Agreement
- Attachment 2 Reimbursement Checklist
- Attachment 3 Glossary and Definitions
- Attachment 4 Acronyms

ARTICLE 4: SCOPE OF WORK

A. As authorized by the Robert T. Stafford Disaster Relief and Emergency Assistance Act (the Stafford Act), as amended (42 U.S.C. § 5121 et seq.), and Section 662 of the Post Katrina Emergency Reform Act of 2006, as amended (6 U.S.C. § 762), the **City of Santa Fe** has been awarded funds for drainage assessment, modeling, conceptual design and final design of bio-infiltration basins to manage and treat stormwater collected by Siringo Road facility and surrounding neighborhoods. Funds shall be utilized as outlined in the approved budget as awarded by FEMA on **July 26,2024.** The Sub Recipient shall match the Federal Award Amount of **$263,221.25** with a local jurisdictional amount of **$87,740.41,** and a subrecipient management cost at 100% federal cost share of **$13,859.25** for a total project cost of **$364,820.91.** All work performed pursuant to this agreement must comply with the approved FEMA application. All work must be completed within the performance period, between **07/26/2024 – 01/25/2027.** The **City of Santa Fe** shall not sub-grant any part of this award to any other entity or organization. Within the first reporting quarter, all awards require confirmation that expenditures in the budget category toward this project will be made. If not, DHSEM may execute a de-obligation of Federal funds without recourse by the **City of Santa Fe.**

B. Approved projects must commence within the first reporting quarter. If a project cannot commence and be operational within the first reporting quarter of the approved award date, the sub–Recipient must submit a written statement to DHSEM, signed by the sub-recipient signatory officials, justifying the delay in implementation, the expected starting date, and a formal request to extend the project start date past the first reporting quarter. At the sole discretion of DHSEM, the grant award is subject to cancellation, and funds may be de-obligated and reallocated to other projects.

ARTICLE 5: PUBLICATIONS

A. Publications created with funding under this grant shall prominently contain the following statement or a DHSEM pre-approved modification: **This Document was prepared under a sub-grant from the FEDERAL EMERGENCY MANAGEMENT AGENCY, and the NEW MEXICO DEPARTMENT OF HOMELAND SECURITY AND EMERGENCY MANAGEMENT. Points of view or opinions expressed in this document are those of the authors and do not necessarily represent the official position or policies of the Federal Emergency Management Agency and the New Mexico Department of Homeland Security and Emergency Management.**

ARTICLE 6: PERFORMANCE PERIODS

The performance period for this sub-grant award is **07/26/2024 – 01/25/2027.** Further, all personnel-related grant activity must be completed between **07/26/2024 – 01/25/2027.** Funds may not be obligated outside of these time periods. An obligation occurs when funds are encumbered, as with a purchase order and/or commitment of salaries and benefits**. All obligated and encumbered funds *must be liquidated* within 45 days of the end of the performance period when the *Final Progress and Financial Reports* are due**.

ARTICLE 7: RECOVERY OF FUNDS FOR DUPLICATION OF BENEFITS AND INELIGIBLE ACTIVITIES

A. Ineligible Activities. The FEMA and/or NMDHSEM may disallow costs and recover funds based on the results of audit or review during or after performance of the award to ensure compliance with the terms of the Sub-recipient Grant Agreement and award document. The FEMA and/or NMDHSEM is required to recover funds when the sub-recipient has ineligible underruns (for example, actual costs for a PA large project are less than the amount awarded based on initial estimates); knowingly or negligently withholds or misrepresents material information; fails to complete work and comply with the terms of this Sub-recipient Grant Agreement or the approved award; expends federal funds in error; or incurs costs that are unreasonable or otherwise disallowed. If, after exhaustion of appeal rights, FEMA and/or NMDHSEM determines a debt is owed, the State has 30 days to resolve the amount owed before the debt is referred to the FEMA Finance Center for collection. The State may do so by directly paying FEMA. The State may also deposit the amount owed directly into the applicable subaccount in U.S. Health and Human Services (HHS)/Smartlink and notify FEMA when it has reimbursed that subaccount, after which FEMA will de-obligate that amount in the subaccount. Alternatively, the sub-recipient may request to substitute unallowable costs for other costs that are allowable (e.g., necessary, allocable, and reasonable under the same award and have not yet been reimbursed by FEMA).

B. Duplication of Benefits. In accordance with the provisions of 42 U.S.C. § 5155 (Section 312 of the Stafford Act), duplication of benefits is prohibited. The NMDHSEM must take all actions necessary and reasonable to ensure that all who receive federal assistance are aware of their responsibility to repay federal assistance that is duplicated by amounts available from insurance or any other source for the same purpose. The FEMA and/or NMDHSEM may at any time, pre-award or post-award, adjust the level of funding provided to account for financial assistance provided from any other source for the same purpose as the federal assistance or to account for benefits available for the same purpose from another source, irrespective of whether they are actually received. The sub-recipient shall notify NMDHSEM, as soon as practicable, of the existence of any insurance coverage for the costs identified in the application and of any entitlement to or recovery of funds from any other source for the project costs, including Small Business Administration funding, United States Department of Agriculture (USDA), and other Federal, State, and private funding. The amount of duplicate sources available shall reduce allowable costs. The sub-recipient shall be liable to NMDHSEM to the extent that the sub-recipient receives duplicate benefits from any other source for the same purposes for which the sub-recipient has received payment from the NMDHSEM.

C. Cooperation. The NMDHSEM agrees, on its behalf and on behalf of its political subdivisions and others that receive federal assistance, to cooperate with the Federal Government in seeking recovery of federal assistance against any party or parties whose intentional acts or omissions or whose negligence or other tortious conduct may have caused or contributed to the damage or hardship for which federal assistance was provided under this Sub-recipient Grant Agreement. If applicable, FEMA will treat recovered funds as duplicated benefits available to NMDHSEM/sub-recipient in accordance with Section 312 of the Stafford Act (codified as amended at 42 U.S.C. § 5155).

D. NMDHSEM Responsibilities. The NMDHSEM is responsible for recovering federal assistance expended in error, misrepresentation, fraud, or for costs otherwise disallowed or unused.

a. The NMDHSEM must notify FEMA of any potential debt as a result of federal funds expended in error, misrepresentation, fraud, or for costs otherwise disallowed or unused.

b. The NMDHSEM must report all cases of suspected fraud to the USDHS Office of Inspector General. The NMDHSEM must cooperate with any investigation conducted by the USDHS Office of Inspector General. The NMDHSEM must cooperate with FEMA regarding any and all lawsuits that may result from the NMDHSEM or FEMA's attempt to recover funds or disallow costs.

E. Statute of Limitations. The 3-year statute of limitations limiting FEMA's ability to initiate an administrative action to recover funds paid as provided for in Section 705(a) of the Stafford Act (codified as amended at 42 U.S.C. § 5205(a)) begins with:

a. Initiation of an Administrative Action to Recover Payment. The initiation of an administrative action to recover payment includes FEMA's written notice to the NMDHSEM or a sub-recipient of a questioned or disallowed cost or improper payment (including a request for information concerning such cost or payment) and written notice to the NMDHSEM or a sub-recipient of a FEMA or 3rd party review or audit.

F. Refunds, Rebates, and Credits. The NMDHSEM must transfer to FEMA the appropriate share, based on the federal support percentage, of any refund, rebate, credit or other amounts arising from the performance of this Sub-recipient Grant Agreement. The NMDHSEM must take necessary action to promptly collect all monies due or which may become due and if applicable, to cooperate with the Federal Government in any claim or suit in connection with amounts due.

G. Non-Compliant Sub-recipients. As per 2 C.F.R. §§ 200.207, 200.303(d) and 200.338(A-F), NMDHSEM can selectively use any or all the following remedies and prompt actions for non-compliance with any term of an award to include audit finding(s):

- **a.** Increased monitoring of projects and require additional financial and performance reports.
- **b.** Disallow advance payment process.
- **c.** Temporarily withhold payments pending correction of the deficiency.
- **d.** Disallow or deny use of funds and matching credit for all or part of the cost of the activity or action not in compliance.
- **e.** Request FEMA to completely or partially de-obligate funding for a project.
- **f.** Temporarily withhold payments pending correction of the deficiency by the sub-recipient.
- **g.** Withhold further awards for the grant program.
- **h.** Take other programmatic or legally available remedies.

ARTICLE 8: CONSTRUCTION REQUIREMENTS

A. The NMDHSEM must ensure that all applicable federal, state, and local permits and approvals are obtained, and all permit conditions are addressed before the start of any construction activity, including FEMA and NMDHSEM/sub-recipient compliance with the National Environmental Policy Act, the National Historic Preservation Act, the Endangered Species Act, and all other applicable environmental laws and executive orders. All construction should be in accordance with approved permits, projects plans and specifications, applicable building codes, and program guidance.

ARTICLE 9: NATIONAL ENVIRONMENTAL POLICY ACT (NEPA)/ENVIRONMENTAL PLANNING AND HISTORIC PRESERVATION (EHP) COMPLIANCE

A. The sub-recipient must provide information to FEMA the legally required environmental planning and historic preservation (EHP) review and to ensure compliance with the applicable EHP laws and Executive Orders (EO). These EHP requirements include but are not limited to National Environmental Policy Act, National Historic Preservation Act, Endangered Species Act, E 11988 Floodplain Management, EO 11990 Protection of Wetlands, and EO 12898 Environmental Justice. The sub-recipient must comply with all federal, state, local, tribal, and territorial EHP requirements and obtain applicable permits and clearances.

B. Sub-recipients shall not undertake any activity from the project that would result in ground disturbance, facility modification, or relates to the use of sonar equipment without the prior approval of FEMA. These include but are not limited to communications towers, physical security enhancements involving ground

disturbance, new construction, and modifications to buildings that are 50 years old or older, and exercises. The sub-recipient must comply with all mitigation or treatment measures required for the project as the result of FEMA's EHP review. An EHP Screening Form does not need to be provided for those exercises that are planned to take place at previously approved facilities, such as, fire and police academies, search and rescue training facilities, and explosive testing centers. Any type of exercise that requires any type of land, water, or vegetation disturbance or building of temporary structures must undergo an EHP review.

C. Any change to an approved project description will require re-evaluation for compliance with EHP requirements before the project can proceed. If ground disturbing activities occur during project implementation, the sub-recipient must ensure monitoring of ground disturbance and if any potential archeological resources are discovered, the sub-recipient will immediately cease construction in that area and notify NMDHSEM, FEMA and the New Mexico Historic Preservation Division. Initiation of these activities prior to completion of FEMA's EHP review will result in a non-compliance finding and may result in ineligibility of grant funding.

ARTICLE 10: PROPERTY AND EQUIPMENT MANAGEMENT

A. The sub-recipient will follow the property standards articulated in 2 C.F.R. § 200.310 through 2 CFR 200.326. The sub-recipient shall, when practical, prominently display the following on any equipment purchased with award funds: **PURCHASED WITH FUNDS PROVIDED BY THE FEDERAL EMERGENCY MANAGEMENT AGENCY.** No equipment purchased with these grant funds may be assigned to other entities or organizations without the expressed approval in writing from DHSEM prior to the jurisdiction's encumbrance or expenditure for that equipment.

B. The subrecipient will follow the property standards articulated in 2 C.F.R. § 200.310 through 2 C.F.R. § 200.326. The subrecipient shall maintain an effective property management system; safeguards to prevent loss, damage or theft; maintenance procedures to keep equipment in good condition; and disposition procedures. A Property Inventory Report shall be submitted to NMDHSEM annually each January 30 with the Financial Progress Report during the performance period, and continued submission is required annually until final disposition of the equipment. The subrecipient shall, when practical, prominently display the following on any equipment purchased with award funds: Purchased with funds provided by the U.S. Department of Homeland Security. No equipment purchased with these grant funds may be assigned to other entities or organizations without the expressed approval in writing from NMDHSEM, prior to the jurisdiction's encumbrance or expenditure for that equipment.

C. Any disposition of property or equipment must be in accordance with 2 C.F.R. § 200.313(e) and pre-approved by FEMA through NMDHSEM.

ARTICLE 11: SUBRECIPIENT MONITORING POLICY

A. In accordance with 2 C.F.R. § 200.328, NMDHSEM may periodically monitor a sub-recipient's projects to ensure that program goals, objectives, timelines, budgets, and other related program criteria are being met. The NMDHSEM reserves the right to periodically review and conduct analysis of the sub-recipient's financial, programmatic, and administrative policies and procedures. This monitoring may include review of accounting for receipts and expenditures, cash management, maintaining adequate financial records, means of allocating and tracking costs, contracting, procurement, records management, payroll, means of allocating staff costs, property and equipment management system, progress of project activities, etc. This may include unscheduled desk audits and field inspections. The sub-recipient shall accommodate all such requests within reason. If the sub-recipient encounters any unanticipated problem with the Scope of Work, allowed costs, procurement, permitting, or other difficulty, the sub-recipient must communicate that problem to NMDHSEM promptly. Work on affected projects must be suspended until the problem is

resolved. Technical assistance is available from NMDHSEM staff.

B. The sub-recipient will immediately, no later than 24-hours upon notice, report to NMDHSEM allegations of wrong-doing on the part of any contractor, sub-contractor, agent or employee of the sub-recipient, or other interested party in reference to the work authorized under this Sub-recipient Grant Agreement. This extends to any legal action, lawsuit, bankruptcy, or other action that may jeopardize the successful completion of any authorized project.

ARTICLE 12: PROCUREMENT

A. Procurement shall comply with all federal, state, and local procurement requirements including 2 C.F.R. § 200.320 and the New Mexico Procurement Code for expenditure of funds under this Agreement. The Applicant must conform to applicable state and federal law and the Procurement Standards Sections 2 C.F.R. § 200.317-326, and Appendix II. Contractors that develop or draft specifications, requirements, Statements of Work, and/or Requests for Proposals (RFP) for a proposed procurement shall be excluded from bidding or submitting a proposal to compete for the award of such procurement. Local bidder's preference is not allowed for federally funded procurements. Procurement transactions shall be conducted to provide maximum open and free competition.

B. When procuring property and services under this agreement, the sub-recipient will follow 2 C.F.R. § 200.318 through 2 C.F.R. § 200.326 and Appendix II. The sub-recipient must use its own documented procurement procedures which reflect applicable state, local, tribal, and territorial laws, and regulations, provided that the procurements conform to applicable federal law and the standards identified in 2 C.F.R. § 200. As such, the sub-recipient must use one of the methods of procurement identified in 2 C.F.R. § 200.320.

C. Also, per 2 C.F.R. § 200.318(i), subrecipients are required to maintain and retain records sufficient to detail the history of procurement covering at least the rationale for the procurement method, selection of contract type, contractor selection or rejection, and the basis for the contract price. States and territories are encouraged to maintain and retain this information as well and are reminded that in order for any cost to be allowable, it must be adequately documented per 2 C.F.R. § 200.403(g). Examples of the types of documents that would cover this information include but are not limited to:

- **a.** Solicitation documentation, such as requests for quotes, invitations for bids, or requests for proposals;
- **b.** Responses to solicitations, such as quotes, bids, or proposals;
- **c.** Pre-solicitation independent cost estimates and post-solicitation cost/price analyses on file for review by federal personnel, if applicable;
- **d.** Contract documents and amendments, including required contract provisions; and
- **e.** Other documents required by federal regulations applicable at the time a subgrant is awarded to a subrecipient.

D. Procurement from Minority Owned and Women Owned Business is encouraged and must be tracked and reported to NMDHSEM on the quarterly reports. Procurement transactions shall be conducted to provide maximum open and free competition. Each sole–source procurement single vendor response to a competitive bid, and all purchases require prior approval of NMDHSEM.

E. The sub-recipient will follow the property standards articulated in 2 C.F.R. § 200.310 through 2 C.F.R. § 200.326. The sub-recipient shall maintain an effective property management system; safeguards to prevent loss, damage or theft; maintenance procedures to keep equipment in good condition; and disposition procedures. Property and equipment records shall be maintained for a period of three years following the final disposition, replacement or transfer of the property and equipment.

ARTICLE 13: CONTRACTS

A. Contractors that develop or draft specifications, requirements, Statements of Work, and/or Requests for Proposals (RFP) for a proposed procurement shall be excluded from bidding or submitting a proposal to compete for the award of such procurement. Local bidder's preference is not allowed for federally funded procurements. Procurement transactions shall be conducted to provide maximum open and free competition. Each sole–source procurement, single vendor response to a competitive bid, and all purchases require prior approval of DHSEM.

B. Any contract shall comply with the requirements of Procurement Standards Sections of 28 C.F.R. Parts 66 and 70, 2 C.F.R. Part 200 and OMB Circulars A–102 "Uniform Administrative Requirements for Grants and Cooperative Agreements with State and Local Governments" for expenditure of Federal funds under this Sub-recipient Grant Agreement. Applicants shall submit procurement and contracts to NMDHSEM for review prior to approval. Contracts for professional services must meet applicable local, state, and federal requirements. All contractors must be licensed in New Mexico for the type of work that is required. Prior to any contracted work beginning, the sub-recipient shall provide NMDHSEM with a copy of the contractor's license. Contract work must not exceed the scope of work and PW awarded amount prescribed by FEMA, unless requested through a scope of work change and approval from FEMA.

C. Any contract entered during this sub-grant period shall comply with local, State, and Federal government contracting regulations. Professional and consultant services contracts must include local, State, and Federal government-required contract language, a project budget, SOW, and a pay schedule. ***All contracts require pre-approval by DHSEM prior to execution.*** Contract deliverables must meet the intent of the grant application and grant requirements. Justification is required for compensation for individual consultant services, which must be reasonable and consistent with the amount paid for similar services in the marketplace. Detailed invoices and time and effort reports are required for consultants.

ARTICLE 14: COMPETITION AND CONFLICTS OF INTEREST

A. Among the requirements of 2 C.F.R. § 200.319(b) applicable to all non-federal entities other than states, in order to ensure objective contractor performance and eliminate unfair competitive advantage, contractors that develop or draft specifications, requirements, statements of work, or invitations for bids or requests for proposals must be excluded from competing for such procurements. The FEMA considers these actions to be an organizational conflict of interest and interprets this restriction as applying to contractors that help a subrecipient develop its grant application, project plans or project budget. This prohibition also applies to the use of former employees to manage the grant or carry out a contract when those former employees worked on such activities while they were employees of the non-federal entity.

B. Under this prohibition, unless the subrecipient solicits for and awards a contract covering both development and execution of specifications (or similar elements as described above), and this contract was procured in compliance with 2 C.F.R. §§ 200.317 – 200.327, federal funds cannot be used to pay a contractor to carry out the work if that contractor also worked on the development of those specifications. This rule applies to all contracts funded with federal grant funds, including pre-award costs, such as grant writer fees, as well as post-award costs, such as grant management fees. Additionally, some of the situations considered to be restrictive of competition include, but are not limited to:

- **a.** Placing unreasonable requirements on firms for them to qualify to do business;
- **b.** Requiring unnecessary experience and excessive bonding;
- **c.** Noncompetitive pricing practices between firms or between affiliated companies;
- **d.** Noncompetitive contracts to consultants that are on retainer contracts;
- **e.** Organizational conflicts of interest;

f. Specifying only a "brand name" product instead of allowing "an equal" product to be offered and describing the performance or other relevant requirements of the procurement; and

g. Any arbitrary action in the procurement process.

C. Per 2 C.F.R. § 200.319(c), the subrecipient must conduct procurements in a manner that prohibits the use of statutorily or administratively imposed state, local, tribal, or territorial geographical preferences in the evaluation of bids or proposals, except in those cases where applicable federal statutes expressly mandate or encourage geographic preference. Nothing in this section preempts state licensing laws. **When contracting for architectural and engineering services, geographic location may be a selection criterion, provided its application leaves an appropriate number of qualified firms, given the nature and size of the project, to compete for the contract.**

D. Under 2 C.F.R. § 200.318(c)(1), the subrecipient is required to maintain written standards of conduct covering conflicts of interest and governing the actions of their employees engaged in the selection, award, and administration of contracts. **No employee, officer, or agent may participate in the selection, award, or administration of a contract supported by a federal award if he or she has a real or apparent conflict of interest.** Such conflicts of interest would arise when the employee, officer or agent, any member of his or her immediate family, his or her partner, or an organization that employs or is about to employ any of the parties indicated herein, has a financial or other interest in or a tangible personal benefit from a firm considered for a contract. The non-federal entity's officers, employees, and agents may neither solicit nor accept gratuities, favors, or anything of monetary value from contractors or parties to subcontracts. However, subrecipient entities may set standards for situations in which the financial interest is not substantial, or the gift is an unsolicited item of nominal value. The standards of conduct must provide for disciplinary actions to be applied for violations of such standards by officers, employees, or agents of the non-federal entity.

E. Under 2 C.F.R. § 200.318(c)(2), if the subrecipient has a parent, affiliate, or subsidiary organization that is not a state, local, tribal or territorial government, the subrecipient must also maintain written standards of conduct covering organizational conflicts of interest. In this context, organizational conflict of interest means that because of a relationship with a parent company, affiliate, or subsidiary organization, the subrecipient is unable or appears to be unable to be impartial in conducting a procurement action involving a related organization. The non-federal entity must disclose in writing any potential conflicts of interest to FEMA or NMDHSEM in accordance with applicable FEMA policy.

ARTICLE 15: CONTRACTS

A. Contracts for professional and consultant services executed during this grant period must include federal, state, local, tribal, and territorial government required contract language, a project budget, and require pre-approval by NMDHSEM prior to implementation. Contract deliverables must meet the intent of the grant application and grant requirements. Justification is required for compensation for individual consultant services, which must be reasonable and consistent with the amount paid for similar services in the marketplace. Detailed invoices and time and effort reports are required for consultants. *See* 2 C.F.R. § 200.1, 2 C.F.R. § 200 Appendix II to Part 200.

ARTICLE 16: AUDIT REQUIREMENTS

A. As a federal grant recipient, the State of New Mexico requires a sub-recipient expending $750,000 or more in federal funds in the organization's fiscal year to conduct an organization–wide audit in accordance with the Single Audit described in 2 C.F.R. § 200.501. The sub-recipient will permit state or federal officials and auditors to have access to sub-recipient and contractor records and financial statements as necessary for

the state to comply with 2 C.F.R. § 200.501. Copies of audit findings must be submitted to NMDHSEM within 30 days after the sub-recipient receives its audit report, or within a 9-month period of the grant closeout date, whichever is earlier. Include the federal agency name, program, grant number, the CFDA title and number, and the name of the pass-through agency (NMDHSEM) in all documents.

ARTICLE 17: RECORDS RETENTION

A. Records Retention.

a. **State Requirement.** The State must retain records for three years after all projects are complete and the federal disaster is formally closed out, except in certain rare circumstances described in 2 C.F.R. § 200.334 (Retention requirements for records), from the date it submits the final Federal Financial Report (SF-425) to FEMA in compliance with 2 C.F.R. § 200.334. If FEMA administratively closes the grant where no final SF-425 was submitted, FEMA uses the date the grant was administratively closed as the start date for the three-year record retention period.

b. **Sub-recipient Requirement.** The sub-recipients must retain project or subaward records for at least three years from the date that the NMDHSEM submits to FEMA the final expenditure report for a project or subaward. If, however, there is any litigation, claim, negotiation, audit, request for information, or other action involving the project or subaward that starts before that date, the records must be retained until completion of the action and resolution of all issues which arise from it, or until the end of the three-year period, whichever is later.

c. The sub-recipient will follow the record retention and access standards articulated in 2 C.F.R. § 200.333 through 2 C.F.R. § 200.337. The grant financial and administrative records shall be maintained for a period of three years following the date of the closure of the grant award, or audit if required. Time and effort, personnel and payroll records for all individuals reimbursed under the award must be maintained. Property and equipment records shall be maintained for a period of three years following the final disposition, replacement or transfer of the property and equipment.

d. The sub-recipient will be required to maintain project records until the expiration of the appropriate retention period. This includes records related to Management Costs, procurement, contracting, accounts payable, engineering, inventory, force account (materials, labor, and equipment), insurance settlements or other records related to the project scope of work. Retention procedures are outlined in the Hazard Mitigation Assistance Grant Programs Administrative Plan.

ARTICLE 18: CHANGES TO AWARD

A. All change requests must be submitted either in writing or electronically to the NMDHSEM contact for review 90 days prior to the termination of this Sub-recipient Grant Agreement. All change requests must be accompanied by a justification narrative and a budget and spending plan. All change requests must be consistent with the scope of the project and grant guidelines. Change requests will be considered only if reporting requirements are current, and all other terms and conditions of this Sub-recipient Grant Agreement have otherwise been met at the time of the request. If approved by NMDHSEM and FEMA, changes in the programmatic activities, purpose of the project, key personnel specified on the grant award, contractual services for activities central to the purposes of the award, change in project site, or release of special conditions, will result in an amendment to this award. Requests for changes must be formally submitted to NMDHSEM and FEMA.

B. Changes to this Sub-recipient Grant Agreement will be made via a Sub-recipient Grant Agreement Amendment. The NMDHSEM will prepare each Amendment when needed. No Sub-recipient Grant

Agreement Amendment is valid until fully executed.

ARTICLE 19: REMEDIES FOR NONCOMPLIANCE

A. For the reasons listed below, special conditions may be imposed, reimbursements may be partially or wholly withheld, the award may be wholly or partly suspended or terminated, or future awards, reimbursements and award modifications may be withheld. The NMDHSEM may institute the following, but is not limited to, withholding authority to proceed to the next phase of a project, requiring additional or more detailed financial reports, additional project monitoring, and/or establish additional prior approvals. The NMDHSEM shall notify the sub-recipient of its decision in writing stating the nature and the reason for imposing the conditions/restrictions, the corrective action required and timeline to remove them, and the method of requesting reconsideration of the imposed conditions/restrictions. The sub-recipient must respond within five days of receipt of notification.

- **a.** Unwillingness or inability to attain project goals or scope of work.
- **b.** Unwillingness or inability to adhere to Special Conditions of this Sub-recipient Grant Agreement.
- **c.** Failure or inability to adhere to grant guidelines and federal compliance requirements.
- **d.** Improper procedures regarding contracts and procurements.
- **e.** Failure to submit reliable and/or timely reports.
- **f.** Fiscal management which does not meet reasonable professional standards.
- **g.** Failure or inability to adhere to the terms and conditions of this Sub-recipient Grant Agreement.
- **h.** Unwillingness or inability to obtain permits required by law to perform the eligible work.
- **i.** Noncompliance with any and all federal, state, local and tribal grant requirements.

B. The NMDHSEM shall notify the sub-recipient of any non-compliance issues in writing and shall attempt to arrive at a resolution in a timely and reasonable fashion. If corrective action is required, NMDHSEM and the sub-recipient shall determine a timeline and landmarks for remediation. The NMDHSEM may require additional detailed financial reports or additional project monitoring. The ultimate penalty for non-compliance with the terms and conditions of this Sub-recipient Grant Agreement is for payments to be withheld or for the award to be suspended or terminated. The sub-recipient agrees to make restitution if necessary.

C. The NMDHSEM may take action as it determines appropriate under the circumstances including but not limited to withholding of payments, disallowance of costs, suspension or termination of the award if the sub-recipient fails to comply with applicable Federal and State statutes, regulations, or the terms of this Sub-recipient Grant Agreement pursuant to 2 C.F.R. § 200.339.

D. Nothing in this section abrogates the sub-recipient's right of appeal.

ARTICLE 20: TERMINATION

A. **For Cause:** In compliance with 2 C.F.R. § Part 200.340(a)(1), if performance is not occurring as agreed, the award may be reduced or terminated without compensation for reduction or termination costs. The NMDHSEM will provide notice of five days to the subrecipient stating the reasons for the action, steps taken to correct the problems, and the commencement date of the reduction or termination. The NMDHSEM will reimburse the subrecipient only for acceptable work or deliverables, necessary and allowable costs incurred through the date of reduction or termination. Final payment may be withheld at the discretion of NMDHSEM until completion of a final NMDHSEM review. Disposition of any equipment acquired under a terminated grant must be in accordance with 2 C.F.R. § 200.313(e).

B. For Convenience: In compliance with 2 CFR Part 200.340(a)(4), this Agreement may be terminated without cause by the subrecipient upon written notice setting forth the reasons for such termination, and the effective date at least 30 days prior to the intended date of termination. A termination pursuant to this provision does not nullify a party's obligations for performance, or liabilities for failure to perform already incurred prior to the date of termination. Any project may be terminated upon convenience, in whole or in part, for the convenience of the subrecipient; though a partial termination notification must specify that portion of the project which is to be terminated. Allowable costs obligated and/or incurred through the date of termination shall be reimbursed. Disposition of any equipment acquired under a terminated grant must be in accordance with 2 C.F.R. § 200.313(e).

ARTICLE 21: CLOSEOUT OF SUB-GRANT

A. Closeout of Projects. Per 2 C.F.R. § 200.344, sub-recipients must submit all cost and supporting documentation for completed projects. The NMDHSEM will review and verify all costs and supporting documents to validate compliance. Failure to comply will result in de-obligation of the project. The NMDHSEM will close each sub-recipient file once it has conducted full review and approval of all supporting documents for compliance and all projects are completed and has project activity closed out.

a. Management Costs. Management Costs will be used for internal staff salaries, contractor payments and other support costs associated with this grant. This will be in accordance with all laws, rules, and FEMA regulations. Management Costs will be processed in accordance with the Hazard Mitigation Assistance Program and Policy Guide.

The NMDHSEM commits to closeout of all grants regardless of the availability of management costs.

ARTICLE 22: SPECIAL CONDITIONS

A. The terms of this Sub-recipient Grant Agreement are contingent upon sufficient appropriations and authorizations being made by the USDHS FEMA under the Robert T. Stafford Disaster Relief and Emergency Assistance Act U.S.C. §§ 5121-5207. If sufficient appropriations and authorizations are not made by FEMA this Sub-recipient Grant Agreement shall terminate immediately upon written notice being given by NMDHSEM to the sub-recipient. The decision of NMDHSEM shall be final.

B. If NMDHSEM proposes an Amendment to the Sub-recipient Grant Agreement to unilaterally reduce funding, the sub-recipient shall have the option to terminate the Sub-recipient Grant Agreement or agree to the reduced funding within 30 days of receipt of the proposed Amendment.

C. Each party shall be solely responsible for fiscal or other sanctions occasioned because of its own violation of requirements applicable to the performance of this Sub-recipient Grant Agreement. Each party shall be liable for its own actions or inactions in accordance with state law and nothing herein shall be deemed a waiver, indemnity or to otherwise create or effect liabilities between the parties.

D. The grant award amount is a funding allocation and is not to be interpreted as expenditure authorizations or approvals.

E. All awarded projects must be planned for, conducted, budgeted, and expended within the designated performance period.

F. Quarterly financial and progress reports are due on October 15, January 15, April 15, and July 15, within the POP. Final reports are due 15 days after the end of POP.

G. All revision requests must be reviewed and approved by NMDHSEM staff. All requests must meet the original scope of the project which may result in a sub-recipient grant amendment.

H. A revision of a project's SOW must be pre-approved by NMDHSEM staff before the jurisdiction can proceed with the request for approval process. If the revision is approved, NMDHSEM staff may request additional documentation to proceed with recommendation to NMDHSEM Leadership for final approval.

I. The beneficiary of this award is solely responsible for all expenditures that are incurred outside of the award performance period. All expenditures that are incurred above and beyond the amount of this Sub-recipient Grant Agreement are the sole responsibility of the sub-recipient of this award.

J. Procurement from Minority Owned and Women Owned Business is encouraged and must be tracked and reported to NMDHSEM on the quarterly reports.

K. Upon completion of all awarded projects, any remaining funds will be de-obligated and reverted to NMDHSEM for return to FEMA.

L. Extensions due to exigent or emergency circumstances will be determined by NMDHSEM on a case-by-case basis.

State of New Mexico
Department of Homeland Security & Emergency Management
P.O. Box 27111
Santa Fe, NM 87502

The acceptance of a subgrant from the United States and the State of New Mexico creates a legal duty and obligation on the part of the sub-recipient to use the funds or property made available in accordance with the conditions of the grant as administered by and through the New Mexico Department of Homeland Security and Emergency Management. By signing this obligating award document, the sub-recipient certifies it has read, understood, and accepted these documents as binding.

SUB-RECIPIENT GRANT AGREEMENT
Signatures of Acceptance

SUB-GRANT NO:	**DR-5430-0012-NM**		
JURISDICTION GRANT PROGRAM MANAGER PRINTED NAME:			
OFFICIAL SIGNATURE:		**DATE:**	
CONTACT NUMBER:		**E-MAIL ADDRESS:**	
JURISDICTION CHIEF FINANCIAL OFFICER PRINTED NAME:			
OFFICIAL SIGNATURE:		**Date:**	
CONTACT NUMBER:		**E-MAIL ADDRESS:**	
JURISDICTION SIGNATORY OFFICIAL PRINTED NAME:			
OFFICIAL SIGNATURE:		**DATE:**	
CONTACT NUMBER:		**E-MAIL ADDRESS:**	
NMDHSEM MITIGATION PROGRAM BUREAU CHIEF PRINTED NAME:			
NMDHSEM MITIGATION PROGRAM BUREAU CHIEF OFFICIAL SIGNATURE / DATE:			
NMDHSEM GRANTS MANAGEMENT BUREAU CHIEF PRINTED NAME:			
NMDHSEM GRANTS MANAGEMENT BUREAU CHIEF OFFICIAL SIGNATURE / DATE:			
NMDHSEM DEPUTY CABINET SECRETARY OFFICIAL PRINTED NAME:			
NMDHSEM DEPUTY CABINET SECRETARY OFFICIAL SIGNATURE / DATE:			

Print one original agreement, sign and email to: DHSEM.MITIGATION@DHSEM.nm.gov

CITY OF SANTA FE:

_____
ALAN WEBBER, MAYOR

DATE:_____

ATTEST:

_____
CITY CLERK

CITY ATTORNEY'S OFFICE:

_____
ASSISTANT CITY ATTORNEY

APPROVED FOR FINANCES:

Emily K. Oster 11/01/2024
_____
FINANCE DIRECTOR

The page is intentionally left blank.

ATTACHMENT 1
USDHS Standard Terms and Conditions
(January 24, 2022)

The Fiscal Year (FY) 2022 USDHS Standard Terms and Conditions apply to all new federal financial assistance awards funded in FY 2022. These terms and conditions flow down to sub-recipients unless an award term or condition specifically indicates otherwise. The United States has the right to seek judicial enforcement of these obligations.

All legislation and digital resources are referenced with no digital links. The FY 2022 USDHS Standard Terms and Conditions will be housed on dhs.gov at www.dhs.gov/publication/fy15-dhs- standard-terms-and-conditions.

A. Assurances, Administrative Requirements, Cost Principles, Representations and Certifications

I. USDHS financial assistance recipients must complete either the Office of Management and Budget (OMB) Standard Form 424B Assurances – Non-Construction Programs, or OMB Standard Form 424D Assurances – Construction Programs, as applicable. Certain assurances in these documents may not be applicable to your program, and the USDHS financial assistance office (USDHS FAO) may require applicants to certify additional assurances. Applicants are required to fill out the assurances as instructed by the awarding agency.

II. USDHS financial assistance recipients are required to follow the applicable provisions of the Uniform Administrative Requirements, Cost Principles, and Audit Requirements for Federal Awards located at Title 2, Code of Federal Regulations (C.F.R.) Part 200 and adopted by USDHS at 2 C.F.R. Part 3002.

III. By accepting this Agreement, recipients, and their executives, as defined in 2 C.F.R. § 170.315, certify that their policies are in accordance with OMB's guidance located at 2 C.F.R. Part 200, all applicable federal laws, and relevant Executive guidance.

B. General Acknowledgements and Assurances

All recipients, sub-recipients, successors, transferees, and assignees must acknowledge and agree to comply with applicable provisions governing USDHS access to records, accounts, documents, information, facilities, and staff.

I. Recipients must cooperate with any USDHS compliance reviews or compliance investigations conducted by USDHS.

II. Recipients must give USDHS access to examine and copy records, accounts, and other documents and sources of information related to the federal financial assistance award and permit access to facilities or personnel.

III. Recipients must submit timely, complete, and accurate reports to the appropriate USDHS officials and maintain appropriate backup documentation to support the reports.

IV. Recipients must comply with all other special reporting, data collection, and evaluation requirements, as prescribed by law, or detailed in program guidance.

V. Recipients (as defined in 2 C.F.R. Part 200 and including recipients acting as pass-through entities) of federal financial assistance from USDHS or one of its awarding component agencies must complete the USDHS Civil Rights Evaluation Tool within thirty (30) days of receipt of the Notice of Award for the first award under which this term applies. Recipients of multiple awards of USDHS financial assistance should only submit one completed tool for their organization, not per award. After the initial submission, recipients are required to complete the tool once every two (2) years if they have an active award, not every time an award is made. Recipients should submit the completed tool, including supporting materials, to CivilRightsEvaluation@hq.dhs.gov. This tool clarifies the civil rights obligations and related reporting requirements contained in the USDHS

Standard Terms and Conditions. Sub-recipients are not required to complete and submit this tool to USDHS. The evaluation tool can be found at https://www.dhs.gov/publication/dhs- civil-rights-evaluation-tool.

The USDHS Office for Civil Rights and Civil Liberties will consider, in its discretion, granting an extension if the recipient identifies steps and a timeline for completing the tool. Recipients should request extensions by emailing the request to CivilRightsEvaluation@hq.dhs.gov prior to expiration of the 30-day deadline.

C. Standard Terms & Conditions

I. Acknowledgement of Federal Funding from USDHS

Recipients must acknowledge their use of federal funding when issuing statements, press releases, requests for proposal, bid invitations, and other documents describing projects or programs funded in whole or in part with federal funds.

II. Activities Conducted Abroad

Recipients must ensure that project activities performed outside the United States are coordinated as necessary with appropriate government authorities and that appropriate licenses, permits, or approvals are obtained.

III. Age Discrimination Act of 1975

Recipients must comply with the requirements of the Age Discrimination Act of 1975, Public Law 94-135 (1975) (codified as amended at Title 42, U.S. Code, § 6101 et seq.), which prohibits discrimination on the basis of age in any program or activity receiving federal financial assistance.

IV. Americans with Disabilities Act of 1990

Recipients must comply with the requirements of Titles I, II, and III of the Americans with Disabilities Act, Pub. L. 101-336 (1990) (codified as amended at 42 U.S.C. §§ 12101– 12213), which prohibits recipients from discriminating on the basis of disability in the operation of public entities, public and private transportation systems, places of public accommodation, and certain testing entities.

V. Best Practices for Collection and Use of Personally Identifiable Information

Recipients who collect personally identifiable information (PII) are required to have a publicly available privacy policy that describes standards on the usage and maintenance of the PII they collect. USDHS defines PII as any information that permits the identity of an individual to be directly or indirectly inferred, including any information that is linked or linkable to that individual. Recipients may also find the USDHS Privacy Impact Assessments: Privacy Guidance and Privacy Template as useful resources respectively.

VI. Civil Rights Act of 1964 – Title VI

Recipients must comply with the requirements of Title VI of the Civil Rights Act of 1964 (codified as amended at 42 U.S.C. § 2000d et seq.), which provides that no person in the United States will, on the grounds of race, color, or national origin, be excluded from participation in, be denied the benefits of, or be subjected to discrimination under any program or activity receiving federal financial assistance. USDHS implementing regulations for the Act are found at 6 C.F.R. Part 21 and 44 C.F.R. Part 7.

VII. Civil Rights Act of 1968

Recipients must comply with Title VIII of the Civil Rights Act of 1968, Pub. L. 90-284, as amended through Pub. L. 113-4, which prohibits recipients from discriminating in the sale, rental, financing, and advertising of dwellings, or in the provision of services in connection therewith, on the basis of race, color, national origin, religion, disability, familial status, and sex (see 42 U.S.C. § 3601 et seq.), as implemented by the U.S. Department of Housing and Urban Development at 24 C.F.R. Part 100. The prohibition on disability discrimination includes the requirement that new multifamily housing with four or more dwelling units—i.e., the public and common use areas and individual apartment units (all units in buildings with elevators and ground-floor units in buildings without elevators)—be designed and constructed with certain accessible features. (See 24 C.F.R. Part 100, Subpart D.)

VIII. Copyright

Recipients must affix the applicable copyright notices of 17 U.S.C. §§ 401 or 402 and an acknowledgement of U.S. Government sponsorship (including the award number) to any work first produced under federal financial assistance awards.

IX. Debarment and Suspension

Recipients are subject to the non-procurement debarment and suspension regulations implementing Executive Orders (E.O.) 12549 and 12689, which are at 2 C.F.R. Part 180 as adopted by USDHS at 2 C.F.R. Part 3002. These regulations restrict federal financial assistance awards, subawards, and contracts with certain parties that are debarred, suspended, or otherwise excluded from or ineligible for participation in federal assistance programs or activities.

X. Drug-Free Workplace Regulations

Recipients must comply with drug-free workplace requirements in Subpart B (or Subpart C, if the recipient is an individual) of 2 C.F.R. Part 3001, which adopts the Government-wide implementation (2 C.F.R. Part 182) of Sec. 5152-5158 of the Drug-Free Workplace Act of 1988 (41 U.S.C. §§ 8101-8106).

XI. Duplication of Benefits

Any cost allocable to a particular federal financial assistance award provided for in 2 C.F.R. Part 200, Subpart E may not be charged to other federal financial assistance awards to overcome fund deficiencies; to avoid restrictions imposed by federal statutes, regulations, or federal financial assistance award terms and conditions; or for other reasons. However, these prohibitions would not preclude recipients from shifting costs that are allowable under two or more awards in accordance with existing federal statutes, regulations, or the federal financial assistance award terms and conditions may not be charged to other federal financial assistance awards to overcome fund deficiencies; to avoid restrictions imposed by federal statutes, regulations, or federal financial assistance award terms and conditions; or for other reasons.

XII. Education Amendments of 1972 (Equal Opportunity in Education Act) – Title IX

Recipients must comply with the requirements of Title IX of the Education Amendments of 1972, Pub. L. 92-318 (1972) (codified as amended at 20 U.S.C. § 1681 et seq.), which provide that no person in the United States will, on the basis of sex, be excluded from participation in, be denied the benefits of, or be subjected to discrimination under any educational program or activity receiving federal financial assistance. USDHS implementing regulations are codified at 6 C.F.R. Part 17 and 44 C.F.R. Part 19.

XIII. Energy Policy and Conservation Act

Recipients must comply with the requirements of the Energy Policy and Conservation Act, Pub. L. 94- 163 (1975) (codified as amended at 42 U.S.C. § 6201 et seq.), which contain policies relating to energy efficiency that are defined in the state energy conservation plan issued in compliance with this Act.

XIV. Ensuring the Future is Made in All of America by All of America's Workers

Recipients must comply with the "Build America, Buy America" provisions of the Infrastructure Investment and Jobs Act and E.O. 14005 which provide that, as appropriate and to the extent consistent with law, the recipient must use all practicable means within their authority under a federal award to provide a preference for the purchase, acquisition, or use of goods, products, or materials produced in the United States (including but not limited to iron, aluminum, steel, cement, and other manufactured products.)

XV. False Claims Act and Program Fraud Civil Remedies

Recipients must comply with the requirements of the False Claims Act, 31 U.S.C. §§3729- 3733, which prohibit the submission of false or fraudulent claims for payment to the Federal Government. (See 31 U.S.C. §§ 3801-3812, which details the administrative remedies for false claims and statements made.)

XVI. Federal Debt Status

All recipients are required to be non-delinquent in their repayment of any federal debt. Examples of relevant debt include delinquent payroll and other taxes, audit disallowances, and benefit overpayments. (See OMB Circular A-129.)

XVII. Federal Leadership on Reducing Text Messaging while Driving

Recipients are encouraged to adopt and enforce policies that ban text messaging while driving as described in E.O. 13513, including conducting initiatives described in Section 3(a) of the Order when on official government business or when performing any work for or on behalf of the Federal Government.

XVIII. Fly America Act of 1974

Recipients must comply with Preference for U.S. Flag Air Carriers (air carriers holding certificates under 49 U.S.C.) for international air transportation of people and property to the extent that such service is available, in accordance with the International Air Transportation Fair Competitive Practices Act of 1974, 49 U.S.C. § 40118, and the interpretative guidelines issued by the Comptroller General of the United States in the March 31, 1981, amendment to Comptroller General Decision B-138942.

XIX. Hotel and Motel Fire Safety Act of 1990

Recipients must ensure that all conference, meeting, convention, or training space funded in whole or in part with federal funds complies with the fire prevention and control guidelines of Section 6 of the Hotel and Motel Fire Safety Act of 1990, 15 U.S.C. § 2225a.

XX. John S. McCain National Defense Authorization Act of Fiscal Year 2019

Recipients, sub-recipients, and their contractors and subcontractors are subject to the prohibitions described in section 889 of the John S. McCain National Defense Authorization Act for Fiscal Year 2019, Pub. L. No. 115-232 (2018) and 2 C.F.R. §§ 200.216, 200.327, 200.471, and Appendix II to 2 C.F.R. Part 200. Beginning August 13, 2020, the statute – as it applies to USDHS recipients, sub-recipients, and their contractors and subcontractors – prohibits obligating or expending federal award funds on certain telecommunications and video surveillance products

and contracting with certain entities for national security reasons.

XXI. Limited English Proficiency (Civil Rights Act of 1964, Title VI)

Recipients must comply with Title VI of the Civil Rights Act of 1964, (42 U.S.C. § 2000d et seq.) prohibition against discrimination on the basis of national origin, which requires that recipients of federal financial assistance take reasonable steps to provide meaningful access to persons with limited English proficiency (LEP) to their programs and services. For additional assistance and information regarding language access obligations, please refer to the USDHS Recipient Guidance: https://www.dhs.gov/guidance- published-help- department- supported-organizations-provide-meaningful-access-people-limited and additional resources on http://www.lep.gov.

XXII. Lobbying Prohibitions

Recipients must comply with 31 U.S.C. § 1352, which provides that none of the funds provided under a federal financial assistance award may be expended by the recipient to pay any person to influence, or attempt to influence an officer or employee of any agency, a Member of Congress, an officer or employee of Congress, or an employee of a Member of Congress in connection with any federal action related to a federal award or contract, including any extension, continuation, renewal, amendment, or modification.

XXIII. National Environmental Policy Act

Recipients must comply with the requirements of the National Environmental Policy Act of 1969, (NEPA) Pub. L. 91-190 (1970) (codified as amended at 42 U.S.C. § 4321 et seq. and the Council on Environmental Quality (CEQ) Regulations for Implementing the Procedural Provisions of NEPA, which require recipients to use all practicable means within their authority, and consistent with other essential considerations of national policy, to create and maintain conditions under which people and nature can exist in productive harmony and fulfill the social, economic, and other needs of present and future generations of Americans.

XXIV. Nondiscrimination in Matters Pertaining to Faith-Based Organizations

It is USDHS policy to ensure the equal treatment of faith-based organizations in social service programs administered or supported by USDHS or its component agencies, enabling those organizations to participate in providing important social services to beneficiaries. Recipients must comply with the equal treatment policies and requirements contained in 6 C.F.R. Part 19 and other applicable statues, regulations, and guidance governing the participations of faith-based organizations in individual USDHS programs.

XXV. Non-Supplanting Requirement

Recipients receiving federal financial assistance awards made under programs that prohibit supplanting by law must ensure that federal funds do not replace (supplant) funds that have been budgeted for the same purpose through non-federal sources.

XXVI. Notice of Funding Opportunity Requirements

All the instructions, guidance, limitations, and other conditions set forth in the Notice of Funding Opportunity (NOFO) for this program are incorporated here by reference in the award terms and conditions. All recipients must comply with any such requirements set forth in the program NOFO.

XXVII. Patents and Intellectual Property Rights

Recipients are subject to the Bayh-Dole Act, 35 U.S.C. § 200 et seq, unless otherwise provided by law. Recipients are subject to the specific requirements governing the development, reporting, and disposition of rights to inventions and patents resulting from federal financial assistance awards located at 37 C.F.R. Part 401 and the standard patent rights clause located at 37 C.F.R. § 401.14.

XXVIII. Procurement of Recovered Materials

States, political subdivisions of states, and their contractors must comply with Section 6002 of the Solid Waste Disposal Act, Pub. L. 89-272 (1965), (codified as amended by the Resource Conservation and Recovery Act, 42 U.S.C. § 6962.) The requirements of Section 6002 include procuring only items designated in guidelines of the Environmental Protection Agency (EPA) at 40 C.F.R. Part 247 that contain the highest percentage of recovered materials practicable, consistent with maintaining a satisfactory level of competition.

XXIX. Rehabilitation Act of 1973

Recipients must comply with the requirements of Section 504 of the Rehabilitation Act of 1973, Pub. L. 93-112 (1973), (codified as amended at 29 U.S.C. § 794,) which provides that no otherwise qualified handicapped individuals in the United States will, solely by reason of the handicap, be excluded from participation in, be denied the benefits of, or be subjected to discrimination under any program or activity receiving federal financial assistance.

XXX. Reporting of Matters Related to Recipient Integrity and Performance General Reporting Requirements.

If the total value of any currently active grants, cooperative agreements, and procurement contracts from all federal awarding agencies exceeds $10,000,000 for any period of time during the period of performance of this federal award, then the recipients must comply with the requirements set forth in the government-wide Award Term and Condition for Recipient Integrity and Performance Matters located at 2 C.F.R. Part 200, Appendix XII, the full text of which is incorporated here by reference in the award terms and conditions.

XXXI. Reporting Subawards and Executive Compensation Reporting of first tier subawards.

Recipients are required to comply with the requirements set forth in the government-wide award term on Reporting Subawards and Executive Compensation located at 2 C.F.R. Part 170, Appendix A, the full text of which is incorporated here by reference in the award terms and conditions.

XXXII. SAFECOM

Recipients receiving federal financial assistance awards made under programs that provide emergency communication equipment and its related activities must comply with the SAFECOM Guidance for Emergency Communication Grants, including provisions on technical standards that ensure and enhance interoperable communications.

XXXIII. Terrorist Financing

Recipients must comply with E.O. 13224 and U.S. laws that prohibit transactions with, and the provisions of resources and support to, individuals and organizations associated with terrorism. Recipients are legally responsible to ensure compliance with the Order and laws.

XXXIV. Trafficking Victims Protection Act of 2000 (TVPA) Trafficking in Persons.

Recipients must comply with the requirements of the government-wide financial assistance award term which implements Section 106 (g) of the Trafficking Victims Protection Act of 2000 (TVPA), codified as amended at 22 U.S.C. § 7104. The award term is located at 2 C.F.R. § 175.15,

the full text of which is incorporated here by reference.

XXXV. Universal Identifier and System of Award Management

Requirements for System for Award Management and Unique Entity Identifier Recipients are required to comply with the requirements set forth in the government-wide financial assistance award term regarding the System for Award Management and Universal Identifier Requirements located at 2 C.F.R. Part 25, Appendix A, the full text of which is incorporated here by reference.

XXXVI. USA PATRIOT Act of 2001

Recipients must comply with requirements of Section 817 of the Uniting and Strengthening America by Providing Appropriate Tools Required to Intercept and Obstruct Terrorism Act of 2001 (USA PATRIOT Act), which amends 18 U.S.C. §§ 175–175c.

XXXVII. Use of USDHS Seal, Logo and Flags

Recipients must obtain permission from their USDHS FAO prior to using the USDHS seal(s), logos, crests or reproductions of flags or likenesses of USDHS agency officials, including use of the United States Coast Guard seal, logo, crests or reproductions of flags or likenesses of Coast Guard officials.

XXXVIII. Whistleblower Protection Act

Recipients must comply with the statutory requirements for whistleblower protections (if applicable) at 10 U.S.C § 2409, 41 U.S.C. § 4712, and 10 U.S.C. § 2324, 41 U.S.C. §§ 4304 and 4310.

The remainder of this page is intentionally left blank.

ATTACHMENT 2
Reimbursement Checklist

DHSEM reserves the right to update this check list throughout the life of the grant to ensure compliance with applicable federal and state rules and regulations. ***Please only check the categories that apply to the reimbursement you are currently requesting.***

EQUIPMENT

- ☐ Have all invoices been included?
- ☐ Has AEL # been identified for each purchase?
- ☐ If service/warranty expenses are listed, are they only for the performance period of the grant?
- ☐ Has proof of payment been included? (e.g., canceled check, Electronic Funds Transfer (EFT) confirmation, or P-Card back up documentation which will include receipt with vendor, copy of credit card statement showing expense charged, and payment to credit card Company for that statement)

CONSULTANTS/CONTRACTORS

- ☐ Does the amount billed by consultant add up correctly?
- ☐ Has all appropriate documentation to denote hours worked been properly signed?
- ☐ Have copies of all planning materials and work product (e.g., meeting documents, copies of plans) been included? (If a meeting was held by recipient or contractor/consultant of recipient, an agenda and signup sheet with meeting date must be included).
- ☐ Has the invoice from consultant/contractor been included?
- ☐ Has proof of payment been included? (e.g., canceled check, Electronic Funds Transfer (EFT) confirmation, or P-Card back up documentation which will include receipt with vendor, copy of credit card statement showing expense charged, and payment to credit card Company for that statement).

SALARY POSITIONS (Note: this applies to positions billed under M&A)

- ☐ Have the following been provided: signed time sheet by employee and supervisor and proof that employee was paid for time worked (statement of earnings, copy of payroll check or payroll register)?
- ☐ Has a time period summary sheet been included for total claimed amount?
- ☐ Has a general ledger payroll report been included for total claimed amount? Ensure this report includes both employee and employer payroll information (i.e., benefits/contributions).
- ☐ Does the back-up documentation include a copy of the check stub per employee for the time period covered?
- ☐ Does the back-up documentation provided match the time period for which reimbursement is being requested?

OTHER:

- ☐ If EHP form needed – has copy of it and approval from USDHS/FEMA been included?

MATCHING FUNDS (IF APPLICABLE)

- ☐ Contributions are from Non-Federal funding sources.
- ☐ Contributions are from cash or in-kind contributions which may include training investments.
- ☐ Contributions are not from salary, overtime, or other operational costs unrelated to training.

This page is intentionally left blank.

ATTACHMENT 3
Glossary and Definitions

Applicant: When an entity applies for PA funding, it is the **Applicant**. Once the Applicant receives funding, it is either the **recipient, pass-through entity,** or a **sub-recipient**.

Authorized Equipment List (AEL): The Authorized Equipment List (AEL) is a list of approved equipment types allowed under FEMA's preparedness grant programs.

Backfill: The act of filling a position left by another employee who has been moved to another role.

Cost Match: Recipient or sub-recipient contribution. This can be cash (hard match) or third party in-kind (soft match). 2 C.F.R. 200.306.

Cost Sharing or Matching: The portion of project costs not paid by federal funds or contributions (unless otherwise authorized by federal statute). 2 C.F.R. 200.1 Cost sharing or matching.

Declared fire: An uncontrolled fire or fire complex, threatening such destruction as would constitute a major disaster, which the FEMA Regional Administrator has approved in response to a state's request for a fire management assistance declaration and in accordance with the criteria listed in 44 C.F.R. 204.21. Fire Management Assistance Declaration Criteria.

Disallowed costs: Those charges to a federal award that the federal awarding agency or pass-through entity determines to be unallowable, in accordance with the applicable federal statutes, regulations, or the terms and conditions of the federal award. 2 C.F.R. 200.1 Disallowed costs.

Demobilization: The process and procedures for deactivating, disassembling, and transporting back to their point of origin all resources that had been provided to respond to and support a declared fire.

Disaster: An emergency condition affecting all or part the state, overwhelming local resources, in which there is likely to be a significant recovery period. The Governor may request a Robert T. Stafford Act (Stafford Act) Disaster Declaration through FEMA, asking for the Public Assistance Program, Fire Management Assistance Program, Individual Assistance Program and Mitigation based upon known and estimated damage assessment data.

Disaster Recovery Reform Act of 2018 (DRRA): The DRRA represents the most comprehensive Emergency Management reform since the Post-Katrina Emergency Management Reform Act in 2006. It includes a larger and more reliable funding stream for pre-disaster mitigation, expanded assistance for individuals and households, and support for states, localities, tribes, and territories (SLTTs) to develop their own emergency management capabilities.

Emergency: A condition in which local and state emergency response agencies are overwhelmed by an incident to the point that federal assistance is needed. Unlike a disaster, an emergency does not have a recovery phase. The Governor may request a Stafford Act Emergency Declaration through FEMA, asking for the Public Assistance Program and/or Fire Management Assistance Grant.

Emergency Work: Work which must be done before, during and immediately after a disaster event to save lives and to protect improved property and public health and safety or to avert or lessen the threat of a major disaster. The FEMA Public Assistance emergency work Categories are:

- Category A (Debris Removal)
- Category B (Emergency Protective Measures)

Equipment: Tangible personal property (including information technology systems) having a useful life of more than one year and a per-unit acquisition cost which equals or exceeds the lesser of the capitalization level established by the non-federal entity for financial statement purposes, or $5,000. 2 C.F.R. 200.1 Equipment.

*Expenditures***:** Charges made by a non-federal entity to a project or program for which a federal award was received. 2 C.F.R. 200.1 Expenditures.

Federal Award: The federal financial assistance that a recipient receives directly from a federal awarding agency or indirectly from a pass-through entity. 2 C.F.R. 200.1 Federal award.

Federal Emergency Management Agency (FEMA): The federal agency responsible for coordinating disaster recovery efforts in partnership with state, local, and tribal governments.

Federal Share: The portion of the federal award costs that are paid using federal funds. 2 C.F.R. 200.1 Federal share.

FEMA/State Agreement: A formal, legal document between FEMA and the state or a tribal government giving the understandings, commitments, terms, conditions, and timelines for assistance resulting from a federal disaster, emergency, or fire declaration, declared by the President.

Governor's Authorized Representative (GAR): The person designated by the Governor to execute all necessary documents for disaster assistance programs on behalf of the state and local grant recipients. The GAR is responsible for state compliance with the FEMA/State Agreement. The GAR may also be designated as the State Coordinating Officer.

Hazard Mitigation: Mitigation is the effort to reduce loss of life and property by lessening the impact of disasters.

Hazard Mitigation (Sections 404 and 406): Section 406 Mitigation measures are specific to the mechanism of the declared disaster and are an integral part of the reconstructed work on a facility or will protect or benefit the repaired portion of the facility. These are different from mitigation measures that are considered for eligibility under the Hazard Mitigation Grant Program (HMGP) of Section 404 of the Stafford Act. In the HMGP program, measures are proposed that may involve facilities other than those damaged by the disaster, new facilities, or even non-structural measures such as the development of floodplain management regulations.

Incident Period: The time interval during which the declared disaster occurs. The Regional Administrator, in consultation with the Governor's Authorized Representative and the Principal Advisor will establish the incident period. Generally, costs must be incurred during the incident period to be considered eligible.

The declaration designates the incident period. The incident period is the span of time during which the federally declared incident occurs. This period varies in length, depending on the incident.

Improved Project: When performing restoration work on a damaged facility, a sub-recipient may use the opportunity to make improvements to the facility. Projects that incorporate such improvements are improved projects. The improved facility must have the same function and at least the equivalent capacity as that of the pre-disaster facility. Federal funding for improved projects is limited to the lesser of the following: the federal share of the approved estimated costs to restore the damaged facility to its pre-disaster design and function or the federal share of the actual cost of completing the improved project. The sub-recipient must obtain FEMA approval, via the NMDHSEM, for an improved project prior to

construction.

Indirect Costs: Costs a recipient or sub-recipient incurs for a common or joint purpose benefitting more than one cost objective that are not readily assignable to the cost objectives specifically benefited.

Joint Field Office (JFO): A temporary facility established in or near a declared disaster area to serve as the field headquarters for FEMA, other federal and state recovery personnel, and serve as the focal point for federal disaster operations, direction, coordination, and information.

Large Project: An approved project estimated to cost the same as or more than the large project threshold amount. The large project threshold is a dollar amount adjusted annually to reflect changes in the Consumer Price Index for all urban consumers. The large project threshold amount, applicable to all projects, is the amount in effect on the declaration date of the disaster, regardless of when project approval is made or when the work is performed.

Management Costs: Management costs are any indirect costs, any direct administrative costs, and any other administrative expenses associated with the administration of HMA awards and subawards. Management costs are provided under HMGP, HMGP Post Fire, BRIC and FMA. For the Hazard Mitigation Grant Program (HMGP) and Hazard Mitigation Grant Program Post Fire (HMGP Post Fire), recipients will be reimbursed no more than 15% of the total amount of the award, of which not more than 10% may be used by the recipient and 5% by the subrecipient. Under HMGP and HMGP Post Fire, recipients' Administrative Plans must include procedures for monitoring and reporting on subrecipient management costs before receiving funding for management costs. For Building Resilient Infrastructure and Communities (BRIC) and Flood Mitigation Assistance (FMA), recipients may apply for a maximum of 10% of the total funds requested in their application cost estimate (federal and non-federal shares) for management costs to support the sub-applications included as part of their award. Subapplicants for BRIC and FMA may apply for a maximum of 5% of the total funds requested in a sub-application for management costs. Additional information is available in FEMA Policy #104-11-1, Hazard Mitigation Grant Program Management Costs (Interim).

Pass-through Entity: A non-federal entity that provides a subaward to a sub-recipient to carry out part of a federal program. 2 C.F.R. 200.1 Pass through entity (PTE).

Performance Period for Hazard Mitigation Assistance: The period of time stipulated in the Sub-recipient Grant Agreement, as amended, during which the sub-recipient must finish the approved work. Projects completed after the active Period of Performance deadline will be considered ineligible.

Quarterly Financial Progress Report: The information in this report is used by NMDHSEM to monitor sub-recipient cash flow, performance, and project implementation to ensure proper use of federal funds.

Recipient: Formally referred to as the grantee or sub-grantee or applicant. Federally Recognized Indian Tribal Governments may also be Recipients if they so desire and if they meet FEMA requirements.

Recovery Officer: Aids in the administration of disaster recovery grant programs for statewide disasters and emergencies. Coordinates and co-administers disaster recovery grant programs, ensuring that they are implemented and carried out according to state and federal program requirements.

Recovery Unit: This is the unit within the NMDHSEM Response and Recovery Bureau designated as responsible for the programmatic administration of the FEMA PA and FMAG Programs.

Recovery Unit Manager: Responsible for administering and supervising staff responsible for federal and state disaster recovery programs and serves as the Deputy State Coordinating Officer (SCO) for

emergencies or major disaster declarations.

Response & Recovery Bureau Chief: Responsible for supervising staff responsible for federal and state disaster recovery programs and staff that provides operational response capabilities to support the citizens of New Mexico. This position also serves as State Coordinating Officer (SCO) for emergencies or major disaster declarations.

Request for Approval Form: Used by sub-recipient to request approval from NMDHSEM to expend funds for previously identified and approved projects. Approval must be received prior to expenditure.

Small Project: An approved project estimated to cost less than the large project threshold amount.

State Coordinating Officer (SCO): The person designated by the Governor to coordinate state and local disaster assistance efforts with those of the federal government. The GAR may also be the SCO. The Governor will name the GAR and the SCO in the FEMA/State Agreement.

Sub-recipient: Formally referred to as the sub-grantee or applicant, is a state agency, local government, tribal government, other legal governmental entity, or a private non-profit (PNP) organization that receives a sub-grant award and which is accountable to the state for the use of the funds provided. The FEMA reserves the final decision as to sub-recipient eligibility.

Supplanting: When a state or unit of local government reduces state or local funds for an activity specifically because federal funds are available (or expected to be available) to fund that same activity. When supplanting is not permitted, federal funds must be used to **supplement** existing state or local funds for program activities and may not replace state or local funds that have been appropriated or allocated for the same purpose. Additionally, federal funding may not replace state or local funding that is required by law. If a question of supplanting arises, the sub-recipient or grantee will be required to substantiate that the reduction in non-federal resources occurred for reasons other than the receipt or expected receipt of federal funds. US Department of Justice Office of Justice Programs, Grants 101.

The remainder of this page is intentionally left blank.

ATTACHMENT 4
Acronyms

AEL: Authorized Equipment List
AGAR: Alternate Governor's Authorized Representative
ASB: Administrative Services Bureau of NMDHSEM
CFDA: Catalog of Federal Domestic Assistance
DAC: Direct Administrative Costs
DOT: Department of Transportation
DPS: Department of Public Safety
DRRA: Disaster Recovery Refo1m Act of 2018
DSCO: Deputy State Coordinating Officer
DSIBD: Deputy State Infrastructure Branch Director
DSPAGS: Deputy State Public Assistance Group Supervisor
EMAC: Emergency Management Assistance Compact
EMMIE: Emergency Management Mission Integrated Environment
EMNRD: Energy, Minerals and Natural Resources Department
FEMA: Federal Emergency Management Agency
FFATA- Federal Funding Accountability and Transparency Act
FMAG - Fire Management Assistance Grant
GAR: Governor's Authorized Representative
IMAS: Intrastate Mutual Aid System
INF: Immediate Needs Funding
IOF: Initial Operating Facility
JFO: Joint Field Office
NSPO: Net Small Project Overrun
NMDHSEM: New Mexico Department of Homeland Security and Emergency Management
ONA: Other Needs Assistance
OMB: Office of Management and Budget
PA: Public Assistance
PAGS: Public Assistance Group Supervisor
PAPPG: Public Assistance Program and Policy Guide
PDA: Preliminary Damage Assessment
PDMG: Program Delivery Manager
PIO: Public Information Officer
PNP: Private Non-Profit
POP: Period of Performance
PW: Project Worksheet
R&R: Response & Recovery Bureau
REC: Record of Environmental Consideration
RO: Recovery Officer
RP A - Request for Public Assistance
SCO: State Coordinating Officer
SOW: Scope of Work
SHARE: New Mexico Statewide Human Resources, Accounting, and Management Reporting System

SIBD: State Infrastructure Branch Director
SPAGS: State Public Assistance Group Supervisor
SPAO: State Public Assistance Officer
USDHS: United States Department of Homeland Security
USFS: US Forest Service
VFO: Virtual Field Office

The remainder of this page is intentionally left blank.

City of Santa Fe New Mexico

Finance Department

Project Ledger Request Form

Date of Request: 09/11/2024 REC 9.27/24

Project Title: Arroyo de los Pinos BioInfiltration Basins

Project Type: ☒ CIP ☒ Grant ☐ Internal tracking

Project Id: OEM2523102
Grant Id: F2514 &S2536
Financial Analyst: Erika Lujan
PAL/CT (Finance Use Only)

Department: General Government/OEM

Project Manager: Kyle Morgan Ext: 629-2539

Project Date Range: 07/2024-01/25/2027

Create Fixed Asset ☐

☒ Multi-Funding (complete all funding sources, should equal 100%)

Funding Source: FEMA Sub-Grant No. DR-5430-0012-NM % of Funding: 75% -$277,081 (277080.50)

MUNIS Org:2310411/2212850 MUNIS Object: 490580 Awarded Amount: $263,222/$13,859

Funding Source: Department of Finance and Administration % of Funding: 25%
(87740.41)

MUNIS Org: 2310411 MUNIS Object: 490210 Awarded Amount: $87,741

Expense String Phase

A project must have at least one phase identified, this can be used as an additional level of tracking, for example, CIP - design, start-up cost, etc. For grants can be used as reimbursable types, such as transportation, salaries.

(You can create more than one phase and you can default MUNIS Orgs and Objects, optional)

Phase: Design MUNIS Org: 2310411 MUNIS Object: 572960
Phase: Project Management MUNIS Org: 2212850 MUNIS Object: 510300
Phase: _____ MUNIS Org: _____ MUNIS Object: _____

Grants Only (list all grants if applicable)

Grantor Name: FEMA-DR54300012NM Awarded Amount: 277080.50

AR Charge Code: 2212850.490580 ☐ Grant funds multiple projects
(Complete a form for each project)

Grantor Id: _____ Federal CFDA (if applicable) 97.039

Grantor Name: DFA MATCH GRANT-MG25-085 Awarded Amount: 87740.41

AR Charge Code: 2310411.490210 ☐ Grant funds multiple projects
(Complete a form for each project)

Grantor Id: _____ Federal CFDA (if applicable) N/A

(If grants please provide all grant award documents with form) ☒ Attached to Grant

HMGP_2023_ADLP_Council_Packet_2024-10-23

Final Audit Report 2024-11-01

Created:	2024-10-30
By:	Justin Gonzales (jmgonzales@santafenm.gov)
Status:	Signed
Transaction ID:	CBJCHBCAABAAD5PADKaUC_C0nFyviJUC1JSzl4Y7Iara

"HMGP_2023_ADLP_Council_Packet_2024-10-23" History

Document created by Justin Gonzales (jmgonzales@santafenm.gov)
2024-10-30 - 4:41:08 PM GMT- IP address: 63.232.20.2

Document emailed to BRIAN WILLIAMS (bgwilliams@santafenm.gov) for signature
2024-10-30 - 4:46:13 PM GMT

Email viewed by BRIAN WILLIAMS (bgwilliams@santafenm.gov)
2024-10-30 - 5:01:35 PM GMT- IP address: 104.47.65.254

Document e-signed by BRIAN WILLIAMS (bgwilliams@santafenm.gov)
Signature Date: 2024-10-30 - 5:02:04 PM GMT - Time Source: server- IP address: 63.232.20.2

Document emailed to rawheeler@santafenm.gov for signature
2024-10-30 - 5:02:07 PM GMT

Email viewed by rawheeler@santafenm.gov
2024-10-30 - 5:03:00 PM GMT- IP address: 104.47.64.254

Signer rawheeler@santafenm.gov entered name at signing as RW
2024-10-30 - 5:03:24 PM GMT- IP address: 63.232.20.2

Document e-signed by RW (rawheeler@santafenm.gov)
Signature Date: 2024-10-30 - 5:03:26 PM GMT - Time Source: server- IP address: 63.232.20.2

Document emailed to HENRI HAMMOND-PAUL (hmhammondpaul@santafenm.gov) for signature
2024-10-30 - 5:03:30 PM GMT

Email viewed by HENRI HAMMOND-PAUL (hmhammondpaul@santafenm.gov)
2024-10-31 - 3:34:43 PM GMT- IP address: 104.47.64.254

Document e-signed by HENRI HAMMOND-PAUL (hmhammondpaul@santafenm.gov)
Signature Date: 2024-10-31 - 3:35:07 PM GMT - Time Source: server- IP address: 63.232.20.2

Document emailed to mtbonifer@santafenm.gov for signature
2024-10-31 - 3:35:09 PM GMT

Email viewed by mtbonifer@santafenm.gov
2024-10-31 - 4:10:39 PM GMT- IP address: 104.47.64.254

Signer mtbonifer@santafenm.gov entered name at signing as Matthew Bonifer
2024-10-31 - 4:34:13 PM GMT- IP address: 63.232.20.2

Document e-signed by Matthew Bonifer (mtbonifer@santafenm.gov)
Signature Date: 2024-10-31 - 4:34:15 PM GMT - Time Source: server- IP address: 63.232.20.2

Document emailed to ajhopkins@santafenm.gov ajhopkins@santafenm.gov (ajhopkins@santafenm.gov) for signature
2024-10-31 - 4:34:18 PM GMT

Email viewed by ajhopkins@santafenm.gov ajhopkins@santafenm.gov (ajhopkins@santafenm.gov)
2024-10-31 - 4:37:01 PM GMT- IP address: 104.47.65.254

Document e-signed by ajhopkins@santafenm.gov ajhopkins@santafenm.gov (ajhopkins@santafenm.gov)
Signature Date: 2024-10-31 - 4:40:10 PM GMT - Time Source: server- IP address: 63.232.20.2

Document emailed to EMILY OSTER (ekoster@santafenm.gov) for signature
2024-10-31 - 4:40:12 PM GMT

Email viewed by EMILY OSTER (ekoster@santafenm.gov)
2024-11-01 - 5:12:14 PM GMT- IP address: 104.47.65.254

Document e-signed by EMILY OSTER (ekoster@santafenm.gov)
Signature Date: 2024-11-01 - 5:22:00 PM GMT - Time Source: server- IP address: 63.232.20.2

Document emailed to JOHN BLAIR (jwblair@santafenm.gov) for signature
2024-11-01 - 5:22:04 PM GMT

Email viewed by JOHN BLAIR (jwblair@santafenm.gov)
2024-11-01 - 6:43:55 PM GMT- IP address: 104.47.65.254

Signer JOHN BLAIR (jwblair@santafenm.gov) entered name at signing as John Blair
2024-11-01 - 6:44:18 PM GMT- IP address: 63.232.20.2

Document e-signed by John Blair (jwblair@santafenm.gov)
Signature Date: 2024-11-01 - 6:44:20 PM GMT - Time Source: server- IP address: 63.232.20.2

Agreement completed.

2024-11-01 - 6:44:20 PM GMT

CITY OF SANTA FE

Date: October 30, 2024

To: Governing Body

Via: Regina Wheeler, Public Works Director RW (Oct 30, 2024 11:03 MDT)
Henri Hammond-Paul, Community Health and Safety Director HENRI HAMMOND-PAUL (Oct 31, 2024 09:35 MDT)

From: **Brian Williams, Office of Emergency Management Director** BRIAN WILLIAMS (Oct 30, 2024 11:02 MDT)

Subject: **Hazard Mitigation Grant Program (HMGP) Grant Approval – Arroyo De Los Pinos Bio-Infiltration Basins Design**

ITEM AND ISSUE:
Request Approval of the 2023 Hazardous Mitigation Grant Program (HMGP) Sub-Grant Agreement DR-5430-0012-NM in the total amount of $364,820.91 with the New Mexico Department of Homeland Security and Emergency Management for Bio-Infiltration Basin Design at Marc Brandt Park. Brian Williams, Director Office of Emergency Management, bgwilliams@santafenm.gov.

Request Approval of a New Mexico Match Fund Grant 24-ZI5044-MG25-085 in the total amount of $87,740.41 with the New Mexico Department of Finance and Administration for Federal Grant Match Funding. Brian Williams, Director Office of Emergency Management, bgwilliams@santafenm.gov.

Request Approval of a FY25 BAR to Budget $350,961.66 in Awarded Federal Grant Funds to Stormwater WIP Design, $13,859.25 in Awarded Federal Grant Funds for Subrecipient Management Costs into Emergency Management Professional Contracts, and $87,740.41 in Awarded State Grant Funds to Stormwater WIP Design.

Action Requested: Grant Approval (2), BAR Approval

BACKGROUND AND SUMMARY:
The City of Santa Fe applied for this reimbursable grant through the United States Department of Homeland Security and Emergency Management (DHSEM) and the Federal Emergency Management Agency (FEMA). The Hazard Mitigation Grant Program (HMGP) supports states, local communities, tribes and territories as they undertake hazard mitigation projects, reducing the risks they face from disasters and natural hazards.

The Office of Emergency Management and the Parks and Open Space Division collaborated to secure this grant for conducting an engineering drainage analysis, green stormwater infrastructure and landscape design for bio-infiltration basins along the Siringo Rd corridor at Marc Brandt Park. The infiltration basins will provide infiltration, passive reuse and water conservation resulting in flood mitigation and a high-quality public open space for low-income communities. In addition, these basins will provide a "first flush" primary treatment of stormwater and decrease pollutant loads at the point of discharge into the Arroyo de Los Pinos.

The Office of Emergency Management applied for matching funds to cover the local share through the New Mexico Department of Finance and Administration (DFA) after receiving the federal grant award.

This Hazard Mitigation Grant Program grant provides a 75% federal share of $350,960.66 and requires a 25% local share of $87,740.41 which will be provided through the New Mexico Match Fund.

The HGMP grant amount also includes a 100% federally funded Subrecipient Management Costs $13,859.25 to assist with capacity in managing the grant.

The Office of Emergency Management will manage these grants, while the Parks and Open Space Division will manage the project.

The term of the grant ends on January 25, 2027.

PROCUREMENT METHOD:
Not applicable. Grant approval only.

Supporting Information:

CONTRACT NUMBER:
The FY25 Project ledger number is OEM2523102

SOURCE/REVENUE: ☐Expense ☒Revenue

The Federal funding source (not including sub-recipient management costs) is:
Fund Name/Number: Stormwater/Fund 231
Munis Org Name/Number: Stormwater/2310411
Munis Object Name/Number: Fed Grant (FEMA)/490580

The Federal funding source (sub-recipient management costs only) is:
Fund Name/Number: Emergency Services/Fund 221
Munis Org Name/Number: Emergency Management/2212850
Munis Object Name/Number: Fed Grant (FEMA)/490580

The Local funding source is:
Fund Name/Number: Stormwater/Fund 231
Munis Org Name/Number: Stormwater/2310411
Munis Object Name/Number: State Grant (DFA)/490210

List grant award number*: DR-540-0012-NM (Federal) / 24-ZI5044- MG25-085 (State)*

Grant Manager / Accounting Officer Approval: Matthew Bonifer Matthew Bonifer (Oct 31, 2024 10:34 MDT) **Date:** 10/31/2024
Comment/Exceptions: _____

Project Ledger #: OEM2523102

Budget Officer Approval: Andy Hopkins **Date:** 10/31/2024
Comment/Exceptions: _____

CAPITAL ASSET (will this procurement result in a tangible item that costs more than $5,000?):

☐Yes | ☒ No

 # (if known): _____

Repair or Replacement of Existing Equipment:

☐Yes | ☒ No
If yes -> ☐Repair | ☐ Replacement

Please explain: _____

Capital Project:
(New and improvement projects that are going to cost $10,000 or more)
☐ Yes | ☒ No

Project Ledger #: OEM2523102

Anticipated length of project: _____

Asset Manager Approval: _____ **Date:** _____
Comment/Exceptions: _____

Department Approvals:
IT Components: ☐ **Yes** | ☒ **No**
Vehicles: ☐ **Yes** | ☒ **No**
Facilities, Furniture, Fixtures, Equipment: ☐ **Yes** | ☒ **No**

Approval: _____ **Title:** _____ **Date**: _____
Approval: _____ **Title:** _____ **Date**: _____
Comment & Exceptions: _____

Department Contract Administrator Contact Info:
Justin Gonzales, jmgonzales@santafenm.gov.

ATTACHMENTS:

1. Budget Amendment Resolution
2. NM Match Fund Grant Agreement
3. Sub-Recipient Grant Agreement (Federal)
4. Project Ledger

Log # *{Finance use only}*:	
Journal # *{Finance use only}*:	

City of Santa Fe, New Mexico
BUDGET AMENDMENT RESOLUTION (BAR)

DEPARTMENT / DIVISION NAME	DATE
Public Works / Stormwater CIP	9/11/2024

ITEM DESCRIPTION	ORG	OBJECT	PROJECT	INCREASE	DECREASE
EXPENDITURES				*{enter as positive #}*	*{enter as negative #}*
WIP DESIGN - Arroyo de Los Pinos Bioinfiltration Basins	2310411	572960	OEM2523102-Design	350,963	
PROFESSIONAL CONTRACTS	2212850	510300	OEM2523102-ProfContracts	13,859	
REVENUES				*{enter as negative #}*	*{enter as positive #}*
FEMA - Arroyo de Los Pinos Bioinfiltration Basins	2310411	490580	OEM2523102	(263,222)	
DFA - Arroyo de Lost Pinos Bioinfiltration Basins	2310411	490210	OEM2523102	(87,741)	
Federal Emergency Management Agency (GRANT)	2212850	490580	OEM2523102	(13,859)	
				$ -	$ -

JUSTIFICATION: *(use additional page if needed)*
--Attach supporting documentation/memo

FY 25 budget increase for subrecipient grant award: DR-5430-0012-NM: FEMA Hazard Mitigation Grant for Arroyo de Los Pinos Bioinfiltration Basins at the Arroyo de Los Pinos in the amount of $263,222 for Design and $13,859 for Management Costs.

Expires 01/25/2027

FY 25 budget increase for Department of Finance and Administration State Matching Grant in the amount of $87,741 to cover 25% local match requirement of FEMA Grant (DR-5430-0012-NM). Expires 06/25/2027.

{Complete section below if BAR results in a net change to ANY Fund}

Fund(s) Affected	Fund Balance Increase/(Decrease)
TOTAL:	**0**

Kyle Morgan — 9/11/2024
Prepared By *{print name}* — Date

Division Director Signature *{optional}* — Date

HENRI HAMMOND-PAUL (Oct 31, 2024 09:35 MDT) — 10/31/2024
Department Director Signature — Date

{Use this form for Finance Committee/ City Council agenda items ONLY}

CITY COUNCIL APPROVAL

City Council Approval Date:

Agenda Item #:

Andy Hopkins — 10/31/2024
Budget Officer — Date

Finance Director *{≤ $5,000}* — Date

City Manager *{≤ $60,000}* — Date

New Mexico Department of Finance and Administration

Item #24-0636

407 Galisteo St,
Santa Fe, NM 87501
(505) 827-4985

Governor Michelle Lujan Grisham
Cabinet Secretary Wayne Propst

Infrastructure Planning & Development Division
Wesley Billingsley, Division Director

RECIPIENT:

City of Santa Fe

APPROPRIATION NUMBER:	ALLOCATION AMOUNT:	REVERSION DATE:
24-ZI5044- MG25-085	$87,740.41	Six (6) months after the end date of the associated federal grant's period of performance.

ALLOCATION PURPOSE

$87,740.41 for costs to meet cost sharing requirements City of Santa Fe – Arroyo De Los Pinos Bio-Infiltration basins Advance Assistance. Funds unexpended by the date specified in the period of performance terms of your federal grant agreement, will be reverted to the State of New Mexico within 6 months of the federal grant closeout.

ALLOCATION DISBURSEMENT

100% of the allocated funds will be disbursed upon execution of the agreement. The Allocation Recipient agrees to submit Annual reports using Exhibit A, Match Fund Annual Report Form, providing updates on the status of the expenditures from this appropriation. The Recipient also understands and agrees to use the allocated funds in accordance with the New Mexico Match Fund Policy.

CERTIFICATION

I hereby certify that City of Santa Fe

1. Will only use the allocated funds to carry out and/or perform activities described in allocation language.
2. Will submit annual reporting through the Match Fund Annual Report link.
3. Will adhere to the Match Fund policy.
4. Will adhere to the provisions of Attachment A- Special Provisions

John Blair
John Blair (Nov 1, 2024 12:44 MDT)

City Manager, City of Santa Fe — 11/01/2024 Date

Emily K. Oster

Finance Director, City of Santa Fe — 11/01/2024 Date

PUBLICITY

Any Publicity regarding this agreement must not be released without prior written approval from the DFA. For purposes of this agreement, "Publicity" means notices, informational pamphlets, press releases, email response, research, reports, signs, and similar public notices prepared by or for the Subrecipient or jointly with others. The Recipient shall not issue, without consent of the DFA, any press release, or make any public announcement with respect to this agreement. In the performance of responsibilities under this agreement, the Recipient agrees to obtain approval of the DFA in advance with respect to all Public Relations, all communications with media, or all communications with any other member of the public with respect to this agreement, except to acknowledge that an agreement does exist. For purposes of this agreement, "Public Relations" includes community relations and means those activities dedicated to maintaining the image of the DFA or maintaining or promoting understanding and favorable relations with the community or public at large or any segment of the public. For violations of this provision, as determined solely by the DFA, the DFA reserves the right to terminate this agreement.

New Mexico
Department *of* Finance
and Administration

407 Galisteo St,
Santa Fe, NM 87501
(505) 827-4985

Governor Michelle Lujan Grisham
Cabinet Secretary Wayne Propst

Infrastructure Planning & Development Division
Wesley Billingsley, Division Director

APPROVAL

In accordance with the authority conferred on the Department of Finance & Administration by the statute appropriating these funds, I hereby approve this certification for MG25-085 in the amount of $87,740.41.

Wesley Billingsley
Director, Infrastructure Planning & Development Division

Date

New Mexico
Department *of* Finance
and Administration

407 Galisteo St,
Santa Fe, NM 87501
(505) 827-4985

Governor Michelle Lujan Grisham
Cabinet Secretary Wayne Propst

Infrastructure Planning & Development Division
Wesley Billingsley, Division Director

OPTIONAL ATTACHMENT A
SPECIAL CONDITIONS

The grant award requires grantees' accounting methods and procedures, including their internal control framework, to be scrutinized, so as to safeguard State appropriations and assets acquired with such appropriations. This Matching Grant Special Grant Condition(s) **Attachment A** is necessary pursuant to Executive Order 2013-006 (2.A.2.a-c, if applicable), due to the Grantees' material weaknesses, significant deficiencies, or findings that raised concerns as to the ability to expend grant funds in accordance with applicable law in the organization's FY23 audit. The Special Conditions identified below apply to the authorized agent, City of Santa Fe.

Procurement - All purchases or contracts the Grantee enters that shall use funding from the Department capital appropriations grant must be approved by the Department prior to the initiation of implementing purchasing documents. The Grantee shall receive such prior approval via official correspondence from the Department, which may be through letter or email. The Grantee shall submit the following to the Department in pursuit of prior approval: purchasing policies and procedures, CFO certification, documentation of management and program approval, policies and procedures governing purchasing and contracting, a copy of the current procurement and contracting policies, and documentation regarding informing staff responsible for purchasing and contracting on such policies and procedures.

Cash Management – policies and procedures on cash management of federal funds. Provide procedures used to draw and disburse federal funds. Provide procedures to reconcile draw amounts, deposits and disbursements; and to prepare federal cash reporting documents to ensure compliance with federal regulations.

The City of Santa was required to and has provided sufficient documentation regarding procurement and cash management as referenced in the City of Santa Fe's FY23 Audit file. Therefore, the criteria to enter into this agreement have been met.

_____ _____

Wesley Billingsley
Director, Infrastructure Planning & Development Division

Date

New Mexico
Department *of* Finance
and Administration

407 Galisteo St,
Santa Fe, NM 87501
(505) 827-4985

Governor Michelle Lujan Grisham
Cabinet Secretary Wayne Propst

Infrastructure Planning & Development Division
Wesley Billingsley, Division Director

Exhibit A

Appropriation Recipient: _____

Appropriation Number: _____

Use of Appropriation Funds	**Amount**
Personnel Expenses	$ 0.00
Contract Expenses	$ 0.00
Other Expenses	$ 0.00
Total Amount of Appropriation Funds Expended	$ 0.00

Narrative *Describe the outcomes, results, benefit, and or uses of the appropriation funds*

IN WITNESS WHEREOF, the City of Santa Fe has agreed to this Grant Award as of the date of the signature by the required approval authorities below.

ATTEST:

GERALYN CARDENAS, INTERIM CITY CLERK

XIV

CITY ATTORNEY'S OFFICE:

Oct 14, 2024

REBECCA MNUK-HERRMANN, ASSISTANT CITY ATTORNEY

Match Fund Grant Agreement MG25-85 with CoSF signature page

Final Audit Report 2024-10-14

Created:	2024-10-08
By:	Amy Cawthon (amcawthon@santafenm.gov)
Status:	Signed
Transaction ID:	CBJCHBCAABAAZGQblCr7sFpbEgtyiD4R0lUnGVLDNmWf

"Match Fund Grant Agreement MG25-85 with CoSF signature page" History

Document created by Amy Cawthon (amcawthon@santafenm.gov)
2024-10-08 - 5:30:23 PM GMT- IP address: 63.232.20.2

Document emailed to Rebecca Mnuk-Herrmann (ramnukherrmann@santafenm.gov) for signature
2024-10-08 - 5:30:55 PM GMT

Email viewed by Rebecca Mnuk-Herrmann (ramnukherrmann@santafenm.gov)
2024-10-14 - 9:59:52 PM GMT- IP address: 174.240.19.127

Document e-signed by Rebecca Mnuk-Herrmann (ramnukherrmann@santafenm.gov)
Signature Date: 2024-10-14 - 10:00:20 PM GMT - Time Source: server- IP address: 174.240.19.127

Agreement completed.
2024-10-14 - 10:00:20 PM GMT

Powered by Adobe Acrobat Sign

State of New Mexico

DEPARTMENT OF HOMELAND SECURITY & EMERGENCY MANAGEMENT

P.O. Box 27111

Santa Fe, NM 87502

SUB-RECIPIENT GRANT AGREEMENT

HAZARD MITIGATION GRANT PROGRAM

CFDA 97.039 : Hazard Mitigation Grant Program Post-Fire

1. SUB-GRANT NO.	2. SUB-RECIPIENT NAME	3. PROJECT NAME
DR-5430-0012-NM	City of Santa Fe	City of Santa Fe – Arroyo De Los Pinos Bio-Infiltration basins Advance Assistance

4. STATE DFA VENDOR NUMBER	5. EIN NUMBER	6. SAM UEI NUMBER	7. CAGE CODE
54360	85-6000168	QLN2YKMMJ8X6	4C987

8. SUB-RECIPIENT PHYSICAL ADDRESS	9. SUB-RECIPIENT REMIT ADDRESS
200 Lincoln Ave Santa Fe, NM 87501	-

10. DHSEM CONTACT NAME:	11. CONTACT DESK PHONE:	225-313-1774
Natalie West	CONTACT EMAIL ADDRESS:	DHSEM.mitigation@dhsem.nm.gov cc: natalie.west@dhsem.nm.gov

12a. PERFORMANCE PERIOD START DATE	07/26/2024	12b. PERFORMANCE PERIOD END DATE	01/25/2027

13. TOTAL AWARD AMOUNT:	$364,820.91

13a. FEDERAL SHARE	13b. LOCAL SHARE	13c. STATE SHARE
$277,080.50	$87,740.41	$0.00

	14a. NAME OF PROJECT AWARD	14b. FEDERAL SHARE	14c. NON-FEDERAL SHARE
1	Arroyo De Los Pinos Bio-Infiltration	$263,221.25	$87,740.41
2	Sub-Recipient Management Costs	$13,859.25	$
TOTAL AMOUNT OF PROJECT		$277,080.50	$87,740.41

WHEREAS The State of New Mexico will serve as the "pass-through entity" with respect to the State's role in providing sub-awards and administering grant assistance provided to sub-recipients and may, subject to a Memorandum of Agreement, directly support project development and administration.

WHEREAS funding has been obligated from the Federal Emergency Management Agency pursuant to a request by the applicant, The Sub-Recipient, City of Santa Fe.

NOW, THEREFORE, it is mutually understood and agreed between the recipient NMDHSEM, and **City of Santa Fe**, hereinafter referred to as "sub-recipient," as follows:

ARTICLE 1: REQUIREMENTS AND ASSURANCES

A. The sub-recipient hereby agrees that the performance period for the grant identified on Page 1, Box 1. is consistent with the performance period identified on Page 1, Box 12a. and 12b. This Sub-recipient Grant Agreement, as amended, shall remain open for administrative purposes if necessary to achieve final payment and financial reconciliation.

B. The sub-recipient hereby agrees that the sub-recipient official signing this Sub-recipient Grant Agreement certifies that all financial expenditures, including all supporting documents submitted for reimbursement, have been incurred by the sub-recipient and are eligible and allowable expenditures consistent with the guidelines for this award. The sub-recipient agrees to follow reasonable professional standards in all financial management and bookkeeping procedures necessary to carry out this agreement.

C. The sub-recipient hereby agrees that no member, officer, or employee of the sub-recipient organization, or its designees or agents, no member of the governing body of the locality in which the program is situated, and no other public official of such locality or localities who exercises any functions or responsibilities with respect to the program during his or her tenure or for one year after that, shall have any interest, direct or indirect, in any contract or subcontract, or the process thereof, for work to be performed in connection with this Sub-recipient Grant Agreement; the sub-recipient shall incorporate in all such contracts a provision prohibiting such interest pursuant to the purposes of this Sub-recipient Grant Agreement.

D. The sub-recipient hereby agrees that it understands and agrees that it cannot use any federal funds, either directly or indirectly, in support of the enactment, repeal, modification, or adoption of any law, regulation, or policy, at any level of government, without the express written approval of the State of New Mexico or FEMA.

E. The sub-recipient hereby agrees that FEMA reserves a royalty-free, non-exclusive, and irrevocable license to reproduce, publish, or otherwise use and authorize others to use, for federal government purposes: (1) the copyright in any work developed under this Sub-recipient Grant Agreement; and (2) any rights of copyright to which the sub-recipient purchases ownership with federal support. The sub-recipient agrees to consult with FEMA through NMDHSEM regarding allocating any patent rights that arise from or are purchased with this funding.

F. The sub-recipient hereby agrees that signatures of the sub-recipient officials on this Sub-recipient Grant Agreement attest to the sub-recipient's understanding, acceptance, and compliance with Lobbying, Debarment, Suspension, and Other Responsibility Matters; Drug- free Workplace; Conflict of Interest, and Non-Supplanting certifications. Federal funds will not be used to supplant state or local funds. Federal funds will be used to supplement existing sub-recipient funding to augment program activities and not replace those funds which have been appropriated in the budget for the

same purpose.

G. The sub-recipient hereby agrees that their accounting system allows for the separation of fund sources. Funding provided under this Sub-recipient Grant Agreement cannot be commingled with funds from other federal, state, or local agencies, and each project must be accounted for separately.

H. The sub-recipient hereby agrees that it shall comply with applicable Federal Civil Rights Laws and Regulations: Title VI of the Civil Rights Act of 1964, Section 504 of the Rehabilitation Act of 1973, Title IX of the Education Amendments of 1972, Age Discrimination Act of 1975, and Americans with Disabilities Act of 1991. The sub-recipient will take reasonable steps to ensure Limited English Proficient (LEP) persons have meaningful access to its programs and activities. Executive Order 13379 Individuals with Disabilities in Emergency Preparedness, requires the government to support safety and security for individuals with disabilities in situations involving disasters, including earthquakes, tornadoes, fires, floods, hurricanes, and acts of terrorism.

I. The sub-recipient hereby certifies that for its employees, it has an Affirmative Action Plan/Equal Employment Opportunity Plan (EEOP) if not exempted by the Federal Government or New Mexico rule or statute. An EEOP is not required for sub-recipients of less than $25,000 or fewer than 50 employees.

J. The sub-recipient hereby certifies that its employees are eligible to work in the United States as verified by Form I–9, Immigration & Naturalization Service Employment Eligibility.

K. The sub-recipient hereby agrees that it is the responsibility of the sub-recipient to fully understand and comply with the requirements of the following, where such requirements apply to the sub-recipient set forth in:

1. 2 C.F.R. § 200: Code of Federal Regulations
2. 44 C.F.R. parts 7, 9, 10, 13, 14, 17, 18, 25, 206, 220, 221, 44 C.F.R. Part 209, 2 C.F.R. Part 200 and any other applicable FEMA policy memoranda and guidance documents
3. FEMA Hazard Mitigation Assistance Program and Policy Guide
4. New Mexico State Procurement Code
   New Mexico Administrative Code Title 2 – Public Finance https://www.srca.nm.gov/nmac-home/nmac-titles/title-2-public-finance/

ARTICLE 2: REIMBURSEMENT OF FUNDS

The NMDHSEM will apply the following procedures for making payments to sub-recipients:

A. Payment of Funds, General: Once FEMA has obligated funds and NMDHSEM has budgeted and encumbered those funds, the Cabinet Secretary is authorized to advance funds, as permissible, and to consider requests for payments for progress and completion based on proper review and approvals, in accordance with the sub-grant agreement or amendment as described below. Review and audit of expending and accounting of federal awards and state funds will be conducted to ensure records, reports, and documentation for compliance and tracing of funds are accounted for; 2 C.F.R. §§ 200.302(b)(6), 200.305(a). The State Department of Finance and Administration (DFA) may require additional supporting data and documents prior to disbursement of funds.

B. Reimbursement shall be based upon authorized and allowable expenditures consistent with the project narrative, grant guidelines, and timely submission of Financial and Performance Progress Reports. Reimbursement of expenditures shall be requested quarterly or monthly if need be for

expenditures within the performance period. A minimum of 25% (of the total project cost) in the non-federal match must be included on each request for reimbursement. All expenditures must be supported with source documentation (e.g., copies of proof of payment, invoices, receipts, timesheets with name/rate/hours and certified, breakdown of expenditures based on FEMA approved budget, warrants, a brief description of work done, required deliverables, etc.). Request for reimbursement will not be processed if quarterly financial or performance reports are delinquent. The final payment of 15% will not be made until DHSEM verifies that all activities are complete. All payments shall be made on an actual cost reimbursement basis.

C. Contracts: All requests for proposals/bids, sole–source procurements, single vendor responses to a competitive bid, and contracts require DHSEM pre–approval prior to implementation. The relevant contract must accompany requests for reimbursement for contractual services.

D. Local Match: Local matching funds must clearly support the source, the amount, and the timing of all matching contributions. When requesting reimbursement, the match percentage must be shown on each invoice. Copies of proof of payment, invoices, receipts, purchase orders, timesheets with name/wage/hours, cost allocation, general ledger, warrants, etc., must be submitted as a backup for the match.

E. Non-reimbursable Expenses:

- Transfer of funds between any programs. Contracts, single vendor response to a competitive bid, sole source contracts, and any procurement documentation not pre-approved by DHSEM.
- Training and related travel costs not pre-approved by DHSEM.
- Supplanting (using federal funds to purchase items previously budgeted for with state or local funds).
- Maintenance and/or wear and tear costs of general use vehicles and emergency response apparatus.
- Equipment purchased for an exercise cannot be used for permanent installation and/or beyond the scope of an exercise.
- Weapons and ammunition.
- Entertainment and sporting events
- Personal items such as laundry, personal hygiene items, magazines, in-room movies, personal travel, and personal phone calls.
- Travel insurance, visa, and passport charges.
- Lodging costs in excess of State per diem, as appropriate.
- Lunch when travel is wholly within a single day.
- Standalone working meals.
- Bar charges, alcoholic beverages.
- Finance, late fees, or interest charges.
- Lobbying, political contributions, and legislative liaison activities.
- Organized fundraising, including salaries of persons while engaged in these activities.
- Expenditures not supported with appropriate documentation when submitted for reimbursement. Only properly documented expenditures will be processed for payment. Unsupported expenditures will be returned to the jurisdiction for resubmission.

F. **Payment Conditions.** The sub-recipient must certify that in requesting and accepting a sub-grant payment, they have spent those funds on eligible expenditures; that the work performed was within the scope of work allowed for specific projects; and that all records pertinent to specific projects will be retained for at least the periods required under record retention regulation requirements from the closeout of the last project. The period of record retention for grant and financial data is three years if state funds are paid.

G. Delays and Denial of Payment. Reasons for delays in FEMA processing of payment requests include, but are not limited to, the following:

- Vendor identification number is missing or incorrect;
- Disaster and project number is missing;
- Period of performance (POP) listed is incorrect;
- Service delivery dates do not agree with invoices or outside of contract period;
- Dollar amount on forms do not agree;
- Mathematical errors;
- Full address of sub-grantee is not included;
- Sub-recipient did not provide required back-up documentation; or

Reasons for NMDHSEM declining payment requests include, but are not limited to, the following:

- The POP has expired;
- The amount exceeds the remaining funding available for disbursement prior to the final financial and program compliance reviews (the hold or funding retention amount);
- Request for payment requires a state and/or budget amendment, and cannot be processed until the amendment request is received/approved;
- The reimbursement requested is for an activity outside of the approved scope of work;
- Forms are not signed by an authorized person, or are signed by only one signatory;
- Reimbursement of awarded funds have been suspended due to a non-compliance issue such as failure to submit quarterly reports; or
- Reimbursements of awarded funds have been suspended due to noncompliance activities.

Sub-recipients can reduce the likelihood of delays in processing of payment requests by checking for accuracy prior to submission.

ARTICLE 3: AUDITING AND REPORTING REQUIREMENTS

A. Quarterly Reports. In accordance with 2 C.F.R. § 200.328, the Applicant shall submit quarterly reports to the NMDHSEM beginning with the first full quarter after the signature date on the Sub-recipient Grant Agreement. The NMDHSEM will provide sub-recipient a form for this report. Quarterly reports are due no later than the 15th of the month following the end of the quarter - January 15, April 15, July 15, and October 15.

In order that NMDHSEM may adequately evaluate the progress and status of each sub-grant, quarterly reports shall contain a description of the work accomplished to date, the methods and procedures used, the anticipated completion date, a summary of all project costs to date, and other such information as may be of assistance in its evaluation of the project.

Reports shall be sent to the Department of Homeland Security & Emergency Management, Recovery Unit, P.O. Box 27111, Santa Fe, NM 87502, or electronically to DHSEM.mitigation@dhsem.nm.gov.

B. Additional Reporting Requirements. The sub-recipient must immediately report in writing to the NMDHSEM Mitigation Unit any alleged acts or allegations of fraud or misappropriation of funds for work authorized under this Sub-recipient Grant Agreement. This extends to reporting any legal action, lawsuit, bankruptcy, or other action that may jeopardize the successful completion of any authorized project. Additional reporting and financial reconciliation requirements may also be requested at NMDHSEM and FEMA's request. Failure to comply with these requests may jeopardize funding and may be a breach of this Sub-recipient Grant Agreement.

C. Enforcement. The NMDHSEM may suspend drawdowns, impose other special conditions, or take other authorized action pursuant to 2 C.F.R. § 200.339 (Remedies for Noncompliance) if the sub-recipient does not submit accurate and timely reports. This may include, among other things, the administrative closeout of a grant and/or any projects under a grant when the sub-recipient is not responsive to reasonable efforts NMDHSEM makes to collect required reports needed to complete closeout. Administrative closeout is a unilateral mechanism by NMDHSEM to move forward with project or grant closeout using available grant information in lieu of final reports. This can require NMDHSEM to make cash or cost adjustments and ineligible cost determinations, which may result in identifying a debt owed to FEMA and/or NMDHSEM.

D. Financial Procedures. The sub-recipient agrees to maintain financial procedures and support documents and to establish and maintain a proper accounting system to record expenditures of disaster assistance funds in accordance with generally accepted accounting principles or as directed by the Governor's Authorized Representative, to account for the receipt and expenditure of funds under this Agreement. If applicable, RECIPIENT / SUBGRANTEE shall conduct audit(s) pursuant to the Single Audit Act of 1984, 31 U.S.C. § 7501 et. seq., 44 C.F.R. Part 14, 2 C.F.R. Part 200, 0MB Circular A-133, "Audits of States, Local Governments, and Non-profit Organizations," and applicable New Mexico laws, rules and regulations. Further, sub-recipient must provide a hard copy of the Single Audit Report within sixty (60) days of the close of its fiscal year. Otherwise, pursuant to 44 C.F.R. § 13.43, NMDHSEM may withhold or suspend payments under any grant award.

The sub-recipient shall retain all financial records, supporting documents, statistical records, and any other documents pertinent to this contract for a period of five years after the date of submission of the final expenditures report. However, if litigation or an audit has been initiated prior to the expiration of the three-year period, the records shall be retained until the litigation or audit findings have been resolved.

E. Authorizing Statute. This award is made under the provisions of the Robert T. Stafford Disaster Relief and Emergency Assistance Act, Pub. L. No. 93-288 (1974) (codified as amended at 42 U.S.C. §§ 5121-5207) (Stafford Act), in accordance with 44 C.F.R. § 206.44.
All scopes of work and costs approved as a result of this Sub-recipient Grant Agreement, whether as estimates or final costs approved through subawards, PWs, or otherwise, will incorporate by reference the terms of this Sub-recipient Grant Agreement and must comply with applicable laws, regulations, policy, and guidance in accordance with this Sub-recipient Grant Agreement.

Pursuant to Executive Order 13858 Strengthening Buy-American Preferences for Infrastructure Projects, FEMA encourages recipients to use, to the greatest extent practicable and consistent with the law, iron and aluminum as well as steel, cement, and other manufactured products produced in the United States in Public Assistance and HMGP eligible public infrastructure repair and construction projects affecting surface transportation, ports, water resources including sewer and drinking water, and power. Such preference must be consistent with the law, including cost and contracting requirements at 2 C.F.R. Part 200.

F. Additional Terms and Conditions. The following additional sub-grant agreement documents are fully incorporated into this Sub-recipient Grant Agreement and thereby constitute additional terms and conditions of this agreement.

- The Stafford Act, its implementing regulations contained in Title 44 of the C.F.R., and FEMA policy and guidance.
- **Hazard Mitigation Assistance Guide (March 2023)**
- The Uniform Administrative Requirements, Cost Principles, and Audit Requirements for Federal Awards set forth at 2 C.F.R. Parts 200 and 3002.

- Attachment 1 United States Department of Homeland Security (USDHS) Standard Terms and Conditions (January 24, 2022) in effect on the date of the Declaration which are incorporated by reference into this Sub-recipient Grant Agreement
- Attachment 2 Reimbursement Checklist
- Attachment 3 Glossary and Definitions
- Attachment 4 Acronyms

ARTICLE 4: SCOPE OF WORK

A. As authorized by the Robert T. Stafford Disaster Relief and Emergency Assistance Act (the Stafford Act), as amended (42 U.S.C. § 5121 et seq.), and Section 662 of the Post Katrina Emergency Reform Act of 2006, as amended (6 U.S.C. § 762), the **City of Santa Fe** has been awarded funds for drainage assessment, modeling, conceptual design and final design of bio-infiltration basins to manage and treat stormwater collected by Siringo Road facility and surrounding neighborhoods. Funds shall be utilized as outlined in the approved budget as awarded by FEMA on **July 26,2024.** The Sub Recipient shall match the Federal Award Amount of **$263,221.25** with a local jurisdictional amount of **$87,740.41,** and a subrecipient management cost at 100% federal cost share of **$13,859.25** for a total project cost of **$364,820.91.** All work performed pursuant to this agreement must comply with the approved FEMA application. All work must be completed within the performance period, between **07/26/2024 – 01/25/2027.** The **City of Santa Fe** shall not sub-grant any part of this award to any other entity or organization. Within the first reporting quarter, all awards require confirmation that expenditures in the budget category toward this project will be made. If not, DHSEM may execute a de-obligation of Federal funds without recourse by the **City of Santa Fe.**

B. Approved projects must commence within the first reporting quarter. If a project cannot commence and be operational within the first reporting quarter of the approved award date, the sub–Recipient must submit a written statement to DHSEM, signed by the sub-recipient signatory officials, justifying the delay in implementation, the expected starting date, and a formal request to extend the project start date past the first reporting quarter. At the sole discretion of DHSEM, the grant award is subject to cancellation, and funds may be de-obligated and reallocated to other projects.

ARTICLE 5: PUBLICATIONS

A. Publications created with funding under this grant shall prominently contain the following statement or a DHSEM pre-approved modification: **This Document was prepared under a sub-grant from the FEDERAL EMERGENCY MANAGEMENT AGENCY, and the NEW MEXICO DEPARTMENT OF HOMELAND SECURITY AND EMERGENCY MANAGEMENT. Points of view or opinions expressed in this document are those of the authors and do not necessarily represent the official position or policies of the Federal Emergency Management Agency and the New Mexico Department of Homeland Security and Emergency Management.**

ARTICLE 6: PERFORMANCE PERIODS

The performance period for this sub-grant award is **07/26/2024 – 01/25/2027.** Further, all personnel-related grant activity must be completed between **07/26/2024 – 01/25/2027.** Funds may not be obligated outside of these time periods. An obligation occurs when funds are encumbered, as with a purchase order and/or commitment of salaries and benefits**. All obligated and encumbered funds *must be liquidated* within 45 days of the end of the performance period when the *Final Progress and Financial Reports* are due**.

ARTICLE 7: RECOVERY OF FUNDS FOR DUPLICATION OF BENEFITS AND INELIGIBLE ACTIVITIES

A. Ineligible Activities. The FEMA and/or NMDHSEM may disallow costs and recover funds based on the results of audit or review during or after performance of the award to ensure compliance with the terms of the Sub-recipient Grant Agreement and award document. The FEMA and/or NMDHSEM is required to recover funds when the sub-recipient has ineligible underruns (for example, actual costs for a PA large project are less than the amount awarded based on initial estimates); knowingly or negligently withholds or misrepresents material information; fails to complete work and comply with the terms of this Sub-recipient Grant Agreement or the approved award; expends federal funds in error; or incurs costs that are unreasonable or otherwise disallowed. If, after exhaustion of appeal rights, FEMA and/or NMDHSEM determines a debt is owed, the State has 30 days to resolve the amount owed before the debt is referred to the FEMA Finance Center for collection. The State may do so by directly paying FEMA. The State may also deposit the amount owed directly into the applicable subaccount in U.S. Health and Human Services (HHS)/Smartlink and notify FEMA when it has reimbursed that subaccount, after which FEMA will de-obligate that amount in the subaccount. Alternatively, the sub-recipient may request to substitute unallowable costs for other costs that are allowable (e.g., necessary, allocable, and reasonable under the same award and have not yet been reimbursed by FEMA).

B. Duplication of Benefits. In accordance with the provisions of 42 U.S.C. § 5155 (Section 312 of the Stafford Act), duplication of benefits is prohibited. The NMDHSEM must take all actions necessary and reasonable to ensure that all who receive federal assistance are aware of their responsibility to repay federal assistance that is duplicated by amounts available from insurance or any other source for the same purpose. The FEMA and/or NMDHSEM may at any time, pre-award or post-award, adjust the level of funding provided to account for financial assistance provided from any other source for the same purpose as the federal assistance or to account for benefits available for the same purpose from another source, irrespective of whether they are actually received. The sub-recipient shall notify NMDHSEM, as soon as practicable, of the existence of any insurance coverage for the costs identified in the application and of any entitlement to or recovery of funds from any other source for the project costs, including Small Business Administration funding, United States Department of Agriculture (USDA), and other Federal, State, and private funding. The amount of duplicate sources available shall reduce allowable costs. The sub-recipient shall be liable to NMDHSEM to the extent that the sub-recipient receives duplicate benefits from any other source for the same purposes for which the sub-recipient has received payment from the NMDHSEM.

C. Cooperation. The NMDHSEM agrees, on its behalf and on behalf of its political subdivisions and others that receive federal assistance, to cooperate with the Federal Government in seeking recovery of federal assistance against any party or parties whose intentional acts or omissions or whose negligence or other tortious conduct may have caused or contributed to the damage or hardship for which federal assistance was provided under this Sub-recipient Grant Agreement. If applicable, FEMA will treat recovered funds as duplicated benefits available to NMDHSEM/sub-recipient in accordance with Section 312 of the Stafford Act (codified as amended at 42 U.S.C. § 5155).

D. NMDHSEM Responsibilities. The NMDHSEM is responsible for recovering federal assistance expended in error, misrepresentation, fraud, or for costs otherwise disallowed or unused.

a. The NMDHSEM must notify FEMA of any potential debt as a result of federal funds expended in error, misrepresentation, fraud, or for costs otherwise disallowed or unused.

b. The NMDHSEM must report all cases of suspected fraud to the USDHS Office of Inspector General. The NMDHSEM must cooperate with any investigation conducted by the USDHS Office of Inspector General. The NMDHSEM must cooperate with FEMA regarding any and all lawsuits that may result from the NMDHSEM or FEMA's attempt to recover funds or disallow costs.

E. Statute of Limitations. The 3-year statute of limitations limiting FEMA's ability to initiate an administrative action to recover funds paid as provided for in Section 705(a) of the Stafford Act (codified as amended at 42 U.S.C. § 5205(a)) begins with:

a. Initiation of an Administrative Action to Recover Payment. The initiation of an administrative action to recover payment includes FEMA's written notice to the NMDHSEM or a sub-recipient of a questioned or disallowed cost or improper payment (including a request for information concerning such cost or payment) and written notice to the NMDHSEM or a sub-recipient of a FEMA or 3rd party review or audit.

F. Refunds, Rebates, and Credits. The NMDHSEM must transfer to FEMA the appropriate share, based on the federal support percentage, of any refund, rebate, credit or other amounts arising from the performance of this Sub-recipient Grant Agreement. The NMDHSEM must take necessary action to promptly collect all monies due or which may become due and if applicable, to cooperate with the Federal Government in any claim or suit in connection with amounts due.

G. Non-Compliant Sub-recipients. As per 2 C.F.R. §§ 200.207, 200.303(d) and 200.338(A-F), NMDHSEM can selectively use any or all the following remedies and prompt actions for non-compliance with any term of an award to include audit finding(s):

- **a.** Increased monitoring of projects and require additional financial and performance reports.
- **b.** Disallow advance payment process.
- **c.** Temporarily withhold payments pending correction of the deficiency.
- **d.** Disallow or deny use of funds and matching credit for all or part of the cost of the activity or action not in compliance.
- **e.** Request FEMA to completely or partially de-obligate funding for a project.
- **f.** Temporarily withhold payments pending correction of the deficiency by the sub-recipient.
- **g.** Withhold further awards for the grant program.
- **h.** Take other programmatic or legally available remedies.

ARTICLE 8: CONSTRUCTION REQUIREMENTS

A. The NMDHSEM must ensure that all applicable federal, state, and local permits and approvals are obtained, and all permit conditions are addressed before the start of any construction activity, including FEMA and NMDHSEM/sub-recipient compliance with the National Environmental Policy Act, the National Historic Preservation Act, the Endangered Species Act, and all other applicable environmental laws and executive orders. All construction should be in accordance with approved permits, projects plans and specifications, applicable building codes, and program guidance.

ARTICLE 9: NATIONAL ENVIRONMENTAL POLICY ACT (NEPA)/ENVIRONMENTAL PLANNING AND HISTORIC PRESERVATION (EHP) COMPLIANCE

A. The sub-recipient must provide information to FEMA the legally required environmental planning and historic preservation (EHP) review and to ensure compliance with the applicable EHP laws and Executive Orders (EO). These EHP requirements include but are not limited to National Environmental Policy Act, National Historic Preservation Act, Endangered Species Act, E 11988 Floodplain Management, EO 11990 Protection of Wetlands, and EO 12898 Environmental Justice. The sub-recipient must comply with all federal, state, local, tribal, and territorial EHP requirements and obtain applicable permits and clearances.

B. Sub-recipients shall not undertake any activity from the project that would result in ground disturbance, facility modification, or relates to the use of sonar equipment without the prior approval of FEMA. These include but are not limited to communications towers, physical security enhancements involving ground

disturbance, new construction, and modifications to buildings that are 50 years old or older, and exercises. The sub-recipient must comply with all mitigation or treatment measures required for the project as the result of FEMA's EHP review. An EHP Screening Form does not need to be provided for those exercises that are planned to take place at previously approved facilities, such as, fire and police academies, search and rescue training facilities, and explosive testing centers. Any type of exercise that requires any type of land, water, or vegetation disturbance or building of temporary structures must undergo an EHP review.

C. Any change to an approved project description will require re-evaluation for compliance with EHP requirements before the project can proceed. If ground disturbing activities occur during project implementation, the sub-recipient must ensure monitoring of ground disturbance and if any potential archeological resources are discovered, the sub-recipient will immediately cease construction in that area and notify NMDHSEM, FEMA and the New Mexico Historic Preservation Division. Initiation of these activities prior to completion of FEMA's EHP review will result in a non-compliance finding and may result in ineligibility of grant funding.

ARTICLE 10: PROPERTY AND EQUIPMENT MANAGEMENT

A. The sub-recipient will follow the property standards articulated in 2 C.F.R. § 200.310 through 2 CFR 200.326. The sub-recipient shall, when practical, prominently display the following on any equipment purchased with award funds: **PURCHASED WITH FUNDS PROVIDED BY THE FEDERAL EMERGENCY MANAGEMENT AGENCY.** No equipment purchased with these grant funds may be assigned to other entities or organizations without the expressed approval in writing from DHSEM prior to the jurisdiction's encumbrance or expenditure for that equipment.

B. The subrecipient will follow the property standards articulated in 2 C.F.R. § 200.310 through 2 C.F.R. § 200.326. The subrecipient shall maintain an effective property management system; safeguards to prevent loss, damage or theft; maintenance procedures to keep equipment in good condition; and disposition procedures. A Property Inventory Report shall be submitted to NMDHSEM annually each January 30 with the Financial Progress Report during the performance period, and continued submission is required annually until final disposition of the equipment. The subrecipient shall, when practical, prominently display the following on any equipment purchased with award funds: Purchased with funds provided by the U.S. Department of Homeland Security. No equipment purchased with these grant funds may be assigned to other entities or organizations without the expressed approval in writing from NMDHSEM, prior to the jurisdiction's encumbrance or expenditure for that equipment.

C. Any disposition of property or equipment must be in accordance with 2 C.F.R. § 200.313(e) and pre-approved by FEMA through NMDHSEM.

ARTICLE 11: SUBRECIPIENT MONITORING POLICY

A. In accordance with 2 C.F.R. § 200.328, NMDHSEM may periodically monitor a sub-recipient's projects to ensure that program goals, objectives, timelines, budgets, and other related program criteria are being met. The NMDHSEM reserves the right to periodically review and conduct analysis of the sub-recipient's financial, programmatic, and administrative policies and procedures. This monitoring may include review of accounting for receipts and expenditures, cash management, maintaining adequate financial records, means of allocating and tracking costs, contracting, procurement, records management, payroll, means of allocating staff costs, property and equipment management system, progress of project activities, etc. This may include unscheduled desk audits and field inspections. The sub-recipient shall accommodate all such requests within reason. If the sub-recipient encounters any unanticipated problem with the Scope of Work, allowed costs, procurement, permitting, or other difficulty, the sub-recipient must communicate that problem to NMDHSEM promptly. Work on affected projects must be suspended until the problem is

resolved. Technical assistance is available from NMDHSEM staff.

B. The sub-recipient will immediately, no later than 24-hours upon notice, report to NMDHSEM allegations of wrong-doing on the part of any contractor, sub-contractor, agent or employee of the sub-recipient, or other interested party in reference to the work authorized under this Sub-recipient Grant Agreement. This extends to any legal action, lawsuit, bankruptcy, or other action that may jeopardize the successful completion of any authorized project.

ARTICLE 12: PROCUREMENT

A. Procurement shall comply with all federal, state, and local procurement requirements including 2 C.F.R. § 200.320 and the New Mexico Procurement Code for expenditure of funds under this Agreement. The Applicant must conform to applicable state and federal law and the Procurement Standards Sections 2 C.F.R. § 200.317-326, and Appendix II. Contractors that develop or draft specifications, requirements, Statements of Work, and/or Requests for Proposals (RFP) for a proposed procurement shall be excluded from bidding or submitting a proposal to compete for the award of such procurement. Local bidder's preference is not allowed for federally funded procurements. Procurement transactions shall be conducted to provide maximum open and free competition.

B. When procuring property and services under this agreement, the sub-recipient will follow 2 C.F.R. § 200.318 through 2 C.F.R. § 200.326 and Appendix II. The sub-recipient must use its own documented procurement procedures which reflect applicable state, local, tribal, and territorial laws, and regulations, provided that the procurements conform to applicable federal law and the standards identified in 2 C.F.R. § 200. As such, the sub-recipient must use one of the methods of procurement identified in 2 C.F.R. § 200.320.

C. Also, per 2 C.F.R. § 200.318(i), subrecipients are required to maintain and retain records sufficient to detail the history of procurement covering at least the rationale for the procurement method, selection of contract type, contractor selection or rejection, and the basis for the contract price. States and territories are encouraged to maintain and retain this information as well and are reminded that in order for any cost to be allowable, it must be adequately documented per 2 C.F.R. § 200.403(g). Examples of the types of documents that would cover this information include but are not limited to:

- **a.** Solicitation documentation, such as requests for quotes, invitations for bids, or requests for proposals;
- **b.** Responses to solicitations, such as quotes, bids, or proposals;
- **c.** Pre-solicitation independent cost estimates and post-solicitation cost/price analyses on file for review by federal personnel, if applicable;
- **d.** Contract documents and amendments, including required contract provisions; and
- **e.** Other documents required by federal regulations applicable at the time a subgrant is awarded to a subrecipient.

D. Procurement from Minority Owned and Women Owned Business is encouraged and must be tracked and reported to NMDHSEM on the quarterly reports. Procurement transactions shall be conducted to provide maximum open and free competition. Each sole–source procurement single vendor response to a competitive bid, and all purchases require prior approval of NMDHSEM.

E. The sub-recipient will follow the property standards articulated in 2 C.F.R. § 200.310 through 2 C.F.R. § 200.326. The sub-recipient shall maintain an effective property management system; safeguards to prevent loss, damage or theft; maintenance procedures to keep equipment in good condition; and disposition procedures. Property and equipment records shall be maintained for a period of three years following the final disposition, replacement or transfer of the property and equipment.

ARTICLE 13: CONTRACTS

A. Contractors that develop or draft specifications, requirements, Statements of Work, and/or Requests for Proposals (RFP) for a proposed procurement shall be excluded from bidding or submitting a proposal to compete for the award of such procurement. Local bidder's preference is not allowed for federally funded procurements. Procurement transactions shall be conducted to provide maximum open and free competition. Each sole–source procurement, single vendor response to a competitive bid, and all purchases require prior approval of DHSEM.

B. Any contract shall comply with the requirements of Procurement Standards Sections of 28 C.F.R. Parts 66 and 70, 2 C.F.R. Part 200 and OMB Circulars A–102 "Uniform Administrative Requirements for Grants and Cooperative Agreements with State and Local Governments" for expenditure of Federal funds under this Sub-recipient Grant Agreement. Applicants shall submit procurement and contracts to NMDHSEM for review prior to approval. Contracts for professional services must meet applicable local, state, and federal requirements. All contractors must be licensed in New Mexico for the type of work that is required. Prior to any contracted work beginning, the sub-recipient shall provide NMDHSEM with a copy of the contractor's license. Contract work must not exceed the scope of work and PW awarded amount prescribed by FEMA, unless requested through a scope of work change and approval from FEMA.

C. Any contract entered during this sub-grant period shall comply with local, State, and Federal government contracting regulations. Professional and consultant services contracts must include local, State, and Federal government-required contract language, a project budget, SOW, and a pay schedule. ***All contracts require pre-approval by DHSEM prior to execution.*** Contract deliverables must meet the intent of the grant application and grant requirements. Justification is required for compensation for individual consultant services, which must be reasonable and consistent with the amount paid for similar services in the marketplace. Detailed invoices and time and effort reports are required for consultants.

ARTICLE 14: COMPETITION AND CONFLICTS OF INTEREST

A. Among the requirements of 2 C.F.R. § 200.319(b) applicable to all non-federal entities other than states, in order to ensure objective contractor performance and eliminate unfair competitive advantage, contractors that develop or draft specifications, requirements, statements of work, or invitations for bids or requests for proposals must be excluded from competing for such procurements. The FEMA considers these actions to be an organizational conflict of interest and interprets this restriction as applying to contractors that help a subrecipient develop its grant application, project plans or project budget. This prohibition also applies to the use of former employees to manage the grant or carry out a contract when those former employees worked on such activities while they were employees of the non-federal entity.

B. Under this prohibition, unless the subrecipient solicits for and awards a contract covering both development and execution of specifications (or similar elements as described above), and this contract was procured in compliance with 2 C.F.R. §§ 200.317 – 200.327, federal funds cannot be used to pay a contractor to carry out the work if that contractor also worked on the development of those specifications. This rule applies to all contracts funded with federal grant funds, including pre-award costs, such as grant writer fees, as well as post-award costs, such as grant management fees. Additionally, some of the situations considered to be restrictive of competition include, but are not limited to:

- **a.** Placing unreasonable requirements on firms for them to qualify to do business;
- **b.** Requiring unnecessary experience and excessive bonding;
- **c.** Noncompetitive pricing practices between firms or between affiliated companies;
- **d.** Noncompetitive contracts to consultants that are on retainer contracts;
- **e.** Organizational conflicts of interest;

f. Specifying only a "brand name" product instead of allowing "an equal" product to be offered and describing the performance or other relevant requirements of the procurement; and

g. Any arbitrary action in the procurement process.

C. Per 2 C.F.R. § 200.319(c), the subrecipient must conduct procurements in a manner that prohibits the use of statutorily or administratively imposed state, local, tribal, or territorial geographical preferences in the evaluation of bids or proposals, except in those cases where applicable federal statutes expressly mandate or encourage geographic preference. Nothing in this section preempts state licensing laws. **When contracting for architectural and engineering services, geographic location may be a selection criterion, provided its application leaves an appropriate number of qualified firms, given the nature and size of the project, to compete for the contract.**

D. Under 2 C.F.R. § 200.318(c)(1), the subrecipient is required to maintain written standards of conduct covering conflicts of interest and governing the actions of their employees engaged in the selection, award, and administration of contracts. **No employee, officer, or agent may participate in the selection, award, or administration of a contract supported by a federal award if he or she has a real or apparent conflict of interest.** Such conflicts of interest would arise when the employee, officer or agent, any member of his or her immediate family, his or her partner, or an organization that employs or is about to employ any of the parties indicated herein, has a financial or other interest in or a tangible personal benefit from a firm considered for a contract. The non-federal entity's officers, employees, and agents may neither solicit nor accept gratuities, favors, or anything of monetary value from contractors or parties to subcontracts. However, subrecipient entities may set standards for situations in which the financial interest is not substantial, or the gift is an unsolicited item of nominal value. The standards of conduct must provide for disciplinary actions to be applied for violations of such standards by officers, employees, or agents of the non-federal entity.

E. Under 2 C.F.R. § 200.318(c)(2), if the subrecipient has a parent, affiliate, or subsidiary organization that is not a state, local, tribal or territorial government, the subrecipient must also maintain written standards of conduct covering organizational conflicts of interest. In this context, organizational conflict of interest means that because of a relationship with a parent company, affiliate, or subsidiary organization, the subrecipient is unable or appears to be unable to be impartial in conducting a procurement action involving a related organization. The non-federal entity must disclose in writing any potential conflicts of interest to FEMA or NMDHSEM in accordance with applicable FEMA policy.

ARTICLE 15: CONTRACTS

A. Contracts for professional and consultant services executed during this grant period must include federal, state, local, tribal, and territorial government required contract language, a project budget, and require pre-approval by NMDHSEM prior to implementation. Contract deliverables must meet the intent of the grant application and grant requirements. Justification is required for compensation for individual consultant services, which must be reasonable and consistent with the amount paid for similar services in the marketplace. Detailed invoices and time and effort reports are required for consultants. *See* 2 C.F.R. § 200.1, 2 C.F.R. § 200 Appendix II to Part 200.

ARTICLE 16: AUDIT REQUIREMENTS

A. As a federal grant recipient, the State of New Mexico requires a sub-recipient expending $750,000 or more in federal funds in the organization's fiscal year to conduct an organization–wide audit in accordance with the Single Audit described in 2 C.F.R. § 200.501. The sub-recipient will permit state or federal officials and auditors to have access to sub-recipient and contractor records and financial statements as necessary for

the state to comply with 2 C.F.R. § 200.501. Copies of audit findings must be submitted to NMDHSEM within 30 days after the sub-recipient receives its audit report, or within a 9-month period of the grant closeout date, whichever is earlier. Include the federal agency name, program, grant number, the CFDA title and number, and the name of the pass-through agency (NMDHSEM) in all documents.

ARTICLE 17: RECORDS RETENTION

A. Records Retention.

a. **State Requirement.** The State must retain records for three years after all projects are complete and the federal disaster is formally closed out, except in certain rare circumstances described in 2 C.F.R. § 200.334 (Retention requirements for records), from the date it submits the final Federal Financial Report (SF-425) to FEMA in compliance with 2 C.F.R. § 200.334. If FEMA administratively closes the grant where no final SF-425 was submitted, FEMA uses the date the grant was administratively closed as the start date for the three-year record retention period.

b. **Sub-recipient Requirement.** The sub-recipients must retain project or subaward records for at least three years from the date that the NMDHSEM submits to FEMA the final expenditure report for a project or subaward. If, however, there is any litigation, claim, negotiation, audit, request for information, or other action involving the project or subaward that starts before that date, the records must be retained until completion of the action and resolution of all issues which arise from it, or until the end of the three-year period, whichever is later.

c. The sub-recipient will follow the record retention and access standards articulated in 2 C.F.R. § 200.333 through 2 C.F.R. § 200.337. The grant financial and administrative records shall be maintained for a period of three years following the date of the closure of the grant award, or audit if required. Time and effort, personnel and payroll records for all individuals reimbursed under the award must be maintained. Property and equipment records shall be maintained for a period of three years following the final disposition, replacement or transfer of the property and equipment.

d. The sub-recipient will be required to maintain project records until the expiration of the appropriate retention period. This includes records related to Management Costs, procurement, contracting, accounts payable, engineering, inventory, force account (materials, labor, and equipment), insurance settlements or other records related to the project scope of work. Retention procedures are outlined in the Hazard Mitigation Assistance Grant Programs Administrative Plan.

ARTICLE 18: CHANGES TO AWARD

A. All change requests must be submitted either in writing or electronically to the NMDHSEM contact for review 90 days prior to the termination of this Sub-recipient Grant Agreement. All change requests must be accompanied by a justification narrative and a budget and spending plan. All change requests must be consistent with the scope of the project and grant guidelines. Change requests will be considered only if reporting requirements are current, and all other terms and conditions of this Sub-recipient Grant Agreement have otherwise been met at the time of the request. If approved by NMDHSEM and FEMA, changes in the programmatic activities, purpose of the project, key personnel specified on the grant award, contractual services for activities central to the purposes of the award, change in project site, or release of special conditions, will result in an amendment to this award. Requests for changes must be formally submitted to NMDHSEM and FEMA.

B. Changes to this Sub-recipient Grant Agreement will be made via a Sub-recipient Grant Agreement Amendment. The NMDHSEM will prepare each Amendment when needed. No Sub-recipient Grant

Agreement Amendment is valid until fully executed.

ARTICLE 19: REMEDIES FOR NONCOMPLIANCE

A. For the reasons listed below, special conditions may be imposed, reimbursements may be partially or wholly withheld, the award may be wholly or partly suspended or terminated, or future awards, reimbursements and award modifications may be withheld. The NMDHSEM may institute the following, but is not limited to, withholding authority to proceed to the next phase of a project, requiring additional or more detailed financial reports, additional project monitoring, and/or establish additional prior approvals. The NMDHSEM shall notify the sub-recipient of its decision in writing stating the nature and the reason for imposing the conditions/restrictions, the corrective action required and timeline to remove them, and the method of requesting reconsideration of the imposed conditions/restrictions. The sub-recipient must respond within five days of receipt of notification.

- **a.** Unwillingness or inability to attain project goals or scope of work.
- **b.** Unwillingness or inability to adhere to Special Conditions of this Sub-recipient Grant Agreement.
- **c.** Failure or inability to adhere to grant guidelines and federal compliance requirements.
- **d.** Improper procedures regarding contracts and procurements.
- **e.** Failure to submit reliable and/or timely reports.
- **f.** Fiscal management which does not meet reasonable professional standards.
- **g.** Failure or inability to adhere to the terms and conditions of this Sub-recipient Grant Agreement.
- **h.** Unwillingness or inability to obtain permits required by law to perform the eligible work.
- **i.** Noncompliance with any and all federal, state, local and tribal grant requirements.

B. The NMDHSEM shall notify the sub-recipient of any non-compliance issues in writing and shall attempt to arrive at a resolution in a timely and reasonable fashion. If corrective action is required, NMDHSEM and the sub-recipient shall determine a timeline and landmarks for remediation. The NMDHSEM may require additional detailed financial reports or additional project monitoring. The ultimate penalty for non-compliance with the terms and conditions of this Sub-recipient Grant Agreement is for payments to be withheld or for the award to be suspended or terminated. The sub-recipient agrees to make restitution if necessary.

C. The NMDHSEM may take action as it determines appropriate under the circumstances including but not limited to withholding of payments, disallowance of costs, suspension or termination of the award if the sub-recipient fails to comply with applicable Federal and State statutes, regulations, or the terms of this Sub-recipient Grant Agreement pursuant to 2 C.F.R. § 200.339.

D. Nothing in this section abrogates the sub-recipient's right of appeal.

ARTICLE 20: TERMINATION

A. **For Cause:** In compliance with 2 C.F.R. § Part 200.340(a)(1), if performance is not occurring as agreed, the award may be reduced or terminated without compensation for reduction or termination costs. The NMDHSEM will provide notice of five days to the subrecipient stating the reasons for the action, steps taken to correct the problems, and the commencement date of the reduction or termination. The NMDHSEM will reimburse the subrecipient only for acceptable work or deliverables, necessary and allowable costs incurred through the date of reduction or termination. Final payment may be withheld at the discretion of NMDHSEM until completion of a final NMDHSEM review. Disposition of any equipment acquired under a terminated grant must be in accordance with 2 C.F.R. § 200.313(e).

B. For Convenience: In compliance with 2 CFR Part 200.340(a)(4), this Agreement may be terminated without cause by the subrecipient upon written notice setting forth the reasons for such termination, and the effective date at least 30 days prior to the intended date of termination. A termination pursuant to this provision does not nullify a party's obligations for performance, or liabilities for failure to perform already incurred prior to the date of termination. Any project may be terminated upon convenience, in whole or in part, for the convenience of the subrecipient; though a partial termination notification must specify that portion of the project which is to be terminated. Allowable costs obligated and/or incurred through the date of termination shall be reimbursed. Disposition of any equipment acquired under a terminated grant must be in accordance with 2 C.F.R. § 200.313(e).

ARTICLE 21: CLOSEOUT OF SUB-GRANT

A. Closeout of Projects. Per 2 C.F.R. § 200.344, sub-recipients must submit all cost and supporting documentation for completed projects. The NMDHSEM will review and verify all costs and supporting documents to validate compliance. Failure to comply will result in de-obligation of the project. The NMDHSEM will close each sub-recipient file once it has conducted full review and approval of all supporting documents for compliance and all projects are completed and has project activity closed out.

a. Management Costs. Management Costs will be used for internal staff salaries, contractor payments and other support costs associated with this grant. This will be in accordance with all laws, rules, and FEMA regulations. Management Costs will be processed in accordance with the Hazard Mitigation Assistance Program and Policy Guide.

The NMDHSEM commits to closeout of all grants regardless of the availability of management costs.

ARTICLE 22: SPECIAL CONDITIONS

A. The terms of this Sub-recipient Grant Agreement are contingent upon sufficient appropriations and authorizations being made by the USDHS FEMA under the Robert T. Stafford Disaster Relief and Emergency Assistance Act U.S.C. §§ 5121-5207. If sufficient appropriations and authorizations are not made by FEMA this Sub-recipient Grant Agreement shall terminate immediately upon written notice being given by NMDHSEM to the sub-recipient. The decision of NMDHSEM shall be final.

B. If NMDHSEM proposes an Amendment to the Sub-recipient Grant Agreement to unilaterally reduce funding, the sub-recipient shall have the option to terminate the Sub-recipient Grant Agreement or agree to the reduced funding within 30 days of receipt of the proposed Amendment.

C. Each party shall be solely responsible for fiscal or other sanctions occasioned because of its own violation of requirements applicable to the performance of this Sub-recipient Grant Agreement. Each party shall be liable for its own actions or inactions in accordance with state law and nothing herein shall be deemed a waiver, indemnity or to otherwise create or effect liabilities between the parties.

D. The grant award amount is a funding allocation and is not to be interpreted as expenditure authorizations or approvals.

E. All awarded projects must be planned for, conducted, budgeted, and expended within the designated performance period.

F. Quarterly financial and progress reports are due on October 15, January 15, April 15, and July 15, within the POP. Final reports are due 15 days after the end of POP.

G. All revision requests must be reviewed and approved by NMDHSEM staff. All requests must meet the original scope of the project which may result in a sub-recipient grant amendment.

H. A revision of a project's SOW must be pre-approved by NMDHSEM staff before the jurisdiction can proceed with the request for approval process. If the revision is approved, NMDHSEM staff may request additional documentation to proceed with recommendation to NMDHSEM Leadership for final approval.

I. The beneficiary of this award is solely responsible for all expenditures that are incurred outside of the award performance period. All expenditures that are incurred above and beyond the amount of this Sub-recipient Grant Agreement are the sole responsibility of the sub-recipient of this award.

J. Procurement from Minority Owned and Women Owned Business is encouraged and must be tracked and reported to NMDHSEM on the quarterly reports.

K. Upon completion of all awarded projects, any remaining funds will be de-obligated and reverted to NMDHSEM for return to FEMA.

L. Extensions due to exigent or emergency circumstances will be determined by NMDHSEM on a case-by-case basis.

State of New Mexico
Department of Homeland Security & Emergency Management
P.O. Box 27111
Santa Fe, NM 87502

The acceptance of a subgrant from the United States and the State of New Mexico creates a legal duty and obligation on the part of the sub-recipient to use the funds or property made available in accordance with the conditions of the grant as administered by and through the New Mexico Department of Homeland Security and Emergency Management. By signing this obligating award document, the sub-recipient certifies it has read, understood, and accepted these documents as binding.

SUB-RECIPIENT GRANT AGREEMENT
Signatures of Acceptance

SUB-GRANT NO:	**DR-5430-0012-NM**		
JURISDICTION GRANT PROGRAM MANAGER PRINTED NAME:			
OFFICIAL SIGNATURE:		**DATE:**	
CONTACT NUMBER:		**E-MAIL ADDRESS:**	
JURISDICTION CHIEF FINANCIAL OFFICER PRINTED NAME:			
OFFICIAL SIGNATURE:		**Date:**	
CONTACT NUMBER:		**E-MAIL ADDRESS:**	
JURISDICTION SIGNATORY OFFICIAL PRINTED NAME:			
OFFICIAL SIGNATURE:		**DATE:**	
CONTACT NUMBER:		**E-MAIL ADDRESS:**	
NMDHSEM MITIGATION PROGRAM BUREAU CHIEF PRINTED NAME:			
NMDHSEM MITIGATION PROGRAM BUREAU CHIEF OFFICIAL SIGNATURE / DATE:			
NMDHSEM GRANTS MANAGEMENT BUREAU CHIEF PRINTED NAME:			
NMDHSEM GRANTS MANAGEMENT BUREAU CHIEF OFFICIAL SIGNATURE / DATE:			
NMDHSEM DEPUTY CABINET SECRETARY OFFICIAL PRINTED NAME:			
NMDHSEM DEPUTY CABINET SECRETARY OFFICIAL SIGNATURE / DATE:			

Print one original agreement, sign and email to: DHSEM.MITIGATION@DHSEM.nm.gov

CITY OF SANTA FE:

_____
ALAN WEBBER, MAYOR

DATE:_____

ATTEST:

_____
CITY CLERK

CITY ATTORNEY'S OFFICE:

_____
ASSISTANT CITY ATTORNEY

APPROVED FOR FINANCES:

Emily K. Oster 11/01/2024
_____
FINANCE DIRECTOR

The page is intentionally left blank.

ATTACHMENT 1
USDHS Standard Terms and Conditions
(January 24, 2022)

The Fiscal Year (FY) 2022 USDHS Standard Terms and Conditions apply to all new federal financial assistance awards funded in FY 2022. These terms and conditions flow down to sub-recipients unless an award term or condition specifically indicates otherwise. The United States has the right to seek judicial enforcement of these obligations.

All legislation and digital resources are referenced with no digital links. The FY 2022 USDHS Standard Terms and Conditions will be housed on dhs.gov at www.dhs.gov/publication/fy15-dhs- standard-terms-and-conditions.

A. Assurances, Administrative Requirements, Cost Principles, Representations and Certifications

I. USDHS financial assistance recipients must complete either the Office of Management and Budget (OMB) Standard Form 424B Assurances – Non-Construction Programs, or OMB Standard Form 424D Assurances – Construction Programs, as applicable. Certain assurances in these documents may not be applicable to your program, and the USDHS financial assistance office (USDHS FAO) may require applicants to certify additional assurances. Applicants are required to fill out the assurances as instructed by the awarding agency.

II. USDHS financial assistance recipients are required to follow the applicable provisions of the Uniform Administrative Requirements, Cost Principles, and Audit Requirements for Federal Awards located at Title 2, Code of Federal Regulations (C.F.R.) Part 200 and adopted by USDHS at 2 C.F.R. Part 3002.

III. By accepting this Agreement, recipients, and their executives, as defined in 2 C.F.R. § 170.315, certify that their policies are in accordance with OMB's guidance located at 2 C.F.R. Part 200, all applicable federal laws, and relevant Executive guidance.

B. General Acknowledgements and Assurances

All recipients, sub-recipients, successors, transferees, and assignees must acknowledge and agree to comply with applicable provisions governing USDHS access to records, accounts, documents, information, facilities, and staff.

I. Recipients must cooperate with any USDHS compliance reviews or compliance investigations conducted by USDHS.

II. Recipients must give USDHS access to examine and copy records, accounts, and other documents and sources of information related to the federal financial assistance award and permit access to facilities or personnel.

III. Recipients must submit timely, complete, and accurate reports to the appropriate USDHS officials and maintain appropriate backup documentation to support the reports.

IV. Recipients must comply with all other special reporting, data collection, and evaluation requirements, as prescribed by law, or detailed in program guidance.

V. Recipients (as defined in 2 C.F.R. Part 200 and including recipients acting as pass-through entities) of federal financial assistance from USDHS or one of its awarding component agencies must complete the USDHS Civil Rights Evaluation Tool within thirty (30) days of receipt of the Notice of Award for the first award under which this term applies. Recipients of multiple awards of USDHS financial assistance should only submit one completed tool for their organization, not per award. After the initial submission, recipients are required to complete the tool once every two (2) years if they have an active award, not every time an award is made. Recipients should submit the completed tool, including supporting materials, to CivilRightsEvaluation@hq.dhs.gov. This tool clarifies the civil rights obligations and related reporting requirements contained in the USDHS

Standard Terms and Conditions. Sub-recipients are not required to complete and submit this tool to USDHS. The evaluation tool can be found at https://www.dhs.gov/publication/dhs- civil-rights-evaluation-tool.

The USDHS Office for Civil Rights and Civil Liberties will consider, in its discretion, granting an extension if the recipient identifies steps and a timeline for completing the tool. Recipients should request extensions by emailing the request to CivilRightsEvaluation@hq.dhs.gov prior to expiration of the 30-day deadline.

C. Standard Terms & Conditions

I. Acknowledgement of Federal Funding from USDHS

Recipients must acknowledge their use of federal funding when issuing statements, press releases, requests for proposal, bid invitations, and other documents describing projects or programs funded in whole or in part with federal funds.

II. Activities Conducted Abroad

Recipients must ensure that project activities performed outside the United States are coordinated as necessary with appropriate government authorities and that appropriate licenses, permits, or approvals are obtained.

III. Age Discrimination Act of 1975

Recipients must comply with the requirements of the Age Discrimination Act of 1975, Public Law 94-135 (1975) (codified as amended at Title 42, U.S. Code, § 6101 et seq.), which prohibits discrimination on the basis of age in any program or activity receiving federal financial assistance.

IV. Americans with Disabilities Act of 1990

Recipients must comply with the requirements of Titles I, II, and III of the Americans with Disabilities Act, Pub. L. 101-336 (1990) (codified as amended at 42 U.S.C. §§ 12101– 12213), which prohibits recipients from discriminating on the basis of disability in the operation of public entities, public and private transportation systems, places of public accommodation, and certain testing entities.

V. Best Practices for Collection and Use of Personally Identifiable Information

Recipients who collect personally identifiable information (PII) are required to have a publicly available privacy policy that describes standards on the usage and maintenance of the PII they collect. USDHS defines PII as any information that permits the identity of an individual to be directly or indirectly inferred, including any information that is linked or linkable to that individual. Recipients may also find the USDHS Privacy Impact Assessments: Privacy Guidance and Privacy Template as useful resources respectively.

VI. Civil Rights Act of 1964 – Title VI

Recipients must comply with the requirements of Title VI of the Civil Rights Act of 1964 (codified as amended at 42 U.S.C. § 2000d et seq.), which provides that no person in the United States will, on the grounds of race, color, or national origin, be excluded from participation in, be denied the benefits of, or be subjected to discrimination under any program or activity receiving federal financial assistance. USDHS implementing regulations for the Act are found at 6 C.F.R. Part 21 and 44 C.F.R. Part 7.

VII. Civil Rights Act of 1968

Recipients must comply with Title VIII of the Civil Rights Act of 1968, Pub. L. 90-284, as amended through Pub. L. 113-4, which prohibits recipients from discriminating in the sale, rental, financing, and advertising of dwellings, or in the provision of services in connection therewith, on the basis of race, color, national origin, religion, disability, familial status, and sex (see 42 U.S.C. § 3601 et seq.), as implemented by the U.S. Department of Housing and Urban Development at 24 C.F.R. Part 100. The prohibition on disability discrimination includes the requirement that new multifamily housing with four or more dwelling units—i.e., the public and common use areas and individual apartment units (all units in buildings with elevators and ground-floor units in buildings without elevators)—be designed and constructed with certain accessible features. (See 24 C.F.R. Part 100, Subpart D.)

VIII. Copyright

Recipients must affix the applicable copyright notices of 17 U.S.C. §§ 401 or 402 and an acknowledgement of U.S. Government sponsorship (including the award number) to any work first produced under federal financial assistance awards.

IX. Debarment and Suspension

Recipients are subject to the non-procurement debarment and suspension regulations implementing Executive Orders (E.O.) 12549 and 12689, which are at 2 C.F.R. Part 180 as adopted by USDHS at 2 C.F.R. Part 3002. These regulations restrict federal financial assistance awards, subawards, and contracts with certain parties that are debarred, suspended, or otherwise excluded from or ineligible for participation in federal assistance programs or activities.

X. Drug-Free Workplace Regulations

Recipients must comply with drug-free workplace requirements in Subpart B (or Subpart C, if the recipient is an individual) of 2 C.F.R. Part 3001, which adopts the Government-wide implementation (2 C.F.R. Part 182) of Sec. 5152-5158 of the Drug-Free Workplace Act of 1988 (41 U.S.C. §§ 8101-8106).

XI. Duplication of Benefits

Any cost allocable to a particular federal financial assistance award provided for in 2 C.F.R. Part 200, Subpart E may not be charged to other federal financial assistance awards to overcome fund deficiencies; to avoid restrictions imposed by federal statutes, regulations, or federal financial assistance award terms and conditions; or for other reasons. However, these prohibitions would not preclude recipients from shifting costs that are allowable under two or more awards in accordance with existing federal statutes, regulations, or the federal financial assistance award terms and conditions may not be charged to other federal financial assistance awards to overcome fund deficiencies; to avoid restrictions imposed by federal statutes, regulations, or federal financial assistance award terms and conditions; or for other reasons.

XII. Education Amendments of 1972 (Equal Opportunity in Education Act) – Title IX

Recipients must comply with the requirements of Title IX of the Education Amendments of 1972, Pub. L. 92-318 (1972) (codified as amended at 20 U.S.C. § 1681 et seq.), which provide that no person in the United States will, on the basis of sex, be excluded from participation in, be denied the benefits of, or be subjected to discrimination under any educational program or activity receiving federal financial assistance. USDHS implementing regulations are codified at 6 C.F.R. Part 17 and 44 C.F.R. Part 19.

XIII. Energy Policy and Conservation Act

Recipients must comply with the requirements of the Energy Policy and Conservation Act, Pub. L. 94- 163 (1975) (codified as amended at 42 U.S.C. § 6201 et seq.), which contain policies relating to energy efficiency that are defined in the state energy conservation plan issued in compliance with this Act.

XIV. Ensuring the Future is Made in All of America by All of America's Workers

Recipients must comply with the "Build America, Buy America" provisions of the Infrastructure Investment and Jobs Act and E.O. 14005 which provide that, as appropriate and to the extent consistent with law, the recipient must use all practicable means within their authority under a federal award to provide a preference for the purchase, acquisition, or use of goods, products, or materials produced in the United States (including but not limited to iron, aluminum, steel, cement, and other manufactured products.)

XV. False Claims Act and Program Fraud Civil Remedies

Recipients must comply with the requirements of the False Claims Act, 31 U.S.C. §§3729- 3733, which prohibit the submission of false or fraudulent claims for payment to the Federal Government. (See 31 U.S.C. §§ 3801-3812, which details the administrative remedies for false claims and statements made.)

XVI. Federal Debt Status

All recipients are required to be non-delinquent in their repayment of any federal debt. Examples of relevant debt include delinquent payroll and other taxes, audit disallowances, and benefit overpayments. (See OMB Circular A-129.)

XVII. Federal Leadership on Reducing Text Messaging while Driving

Recipients are encouraged to adopt and enforce policies that ban text messaging while driving as described in E.O. 13513, including conducting initiatives described in Section 3(a) of the Order when on official government business or when performing any work for or on behalf of the Federal Government.

XVIII. Fly America Act of 1974

Recipients must comply with Preference for U.S. Flag Air Carriers (air carriers holding certificates under 49 U.S.C.) for international air transportation of people and property to the extent that such service is available, in accordance with the International Air Transportation Fair Competitive Practices Act of 1974, 49 U.S.C. § 40118, and the interpretative guidelines issued by the Comptroller General of the United States in the March 31, 1981, amendment to Comptroller General Decision B-138942.

XIX. Hotel and Motel Fire Safety Act of 1990

Recipients must ensure that all conference, meeting, convention, or training space funded in whole or in part with federal funds complies with the fire prevention and control guidelines of Section 6 of the Hotel and Motel Fire Safety Act of 1990, 15 U.S.C. § 2225a.

XX. John S. McCain National Defense Authorization Act of Fiscal Year 2019

Recipients, sub-recipients, and their contractors and subcontractors are subject to the prohibitions described in section 889 of the John S. McCain National Defense Authorization Act for Fiscal Year 2019, Pub. L. No. 115-232 (2018) and 2 C.F.R. §§ 200.216, 200.327, 200.471, and Appendix II to 2 C.F.R. Part 200. Beginning August 13, 2020, the statute – as it applies to USDHS recipients, sub-recipients, and their contractors and subcontractors – prohibits obligating or expending federal award funds on certain telecommunications and video surveillance products

and contracting with certain entities for national security reasons.

XXI. Limited English Proficiency (Civil Rights Act of 1964, Title VI)

Recipients must comply with Title VI of the Civil Rights Act of 1964, (42 U.S.C. § 2000d et seq.) prohibition against discrimination on the basis of national origin, which requires that recipients of federal financial assistance take reasonable steps to provide meaningful access to persons with limited English proficiency (LEP) to their programs and services. For additional assistance and information regarding language access obligations, please refer to the USDHS Recipient Guidance: https://www.dhs.gov/guidance- published-help- department- supported-organizations-provide-meaningful-access-people-limited and additional resources on http://www.lep.gov.

XXII. Lobbying Prohibitions

Recipients must comply with 31 U.S.C. § 1352, which provides that none of the funds provided under a federal financial assistance award may be expended by the recipient to pay any person to influence, or attempt to influence an officer or employee of any agency, a Member of Congress, an officer or employee of Congress, or an employee of a Member of Congress in connection with any federal action related to a federal award or contract, including any extension, continuation, renewal, amendment, or modification.

XXIII. National Environmental Policy Act

Recipients must comply with the requirements of the National Environmental Policy Act of 1969, (NEPA) Pub. L. 91-190 (1970) (codified as amended at 42 U.S.C. § 4321 et seq. and the Council on Environmental Quality (CEQ) Regulations for Implementing the Procedural Provisions of NEPA, which require recipients to use all practicable means within their authority, and consistent with other essential considerations of national policy, to create and maintain conditions under which people and nature can exist in productive harmony and fulfill the social, economic, and other needs of present and future generations of Americans.

XXIV. Nondiscrimination in Matters Pertaining to Faith-Based Organizations

It is USDHS policy to ensure the equal treatment of faith-based organizations in social service programs administered or supported by USDHS or its component agencies, enabling those organizations to participate in providing important social services to beneficiaries. Recipients must comply with the equal treatment policies and requirements contained in 6 C.F.R. Part 19 and other applicable statues, regulations, and guidance governing the participations of faith-based organizations in individual USDHS programs.

XXV. Non-Supplanting Requirement

Recipients receiving federal financial assistance awards made under programs that prohibit supplanting by law must ensure that federal funds do not replace (supplant) funds that have been budgeted for the same purpose through non-federal sources.

XXVI. Notice of Funding Opportunity Requirements

All the instructions, guidance, limitations, and other conditions set forth in the Notice of Funding Opportunity (NOFO) for this program are incorporated here by reference in the award terms and conditions. All recipients must comply with any such requirements set forth in the program NOFO.

XXVII. Patents and Intellectual Property Rights

Recipients are subject to the Bayh-Dole Act, 35 U.S.C. § 200 et seq, unless otherwise provided by law. Recipients are subject to the specific requirements governing the development, reporting, and disposition of rights to inventions and patents resulting from federal financial assistance awards located at 37 C.F.R. Part 401 and the standard patent rights clause located at 37 C.F.R. § 401.14.

XXVIII. Procurement of Recovered Materials

States, political subdivisions of states, and their contractors must comply with Section 6002 of the Solid Waste Disposal Act, Pub. L. 89-272 (1965), (codified as amended by the Resource Conservation and Recovery Act, 42 U.S.C. § 6962.) The requirements of Section 6002 include procuring only items designated in guidelines of the Environmental Protection Agency (EPA) at 40 C.F.R. Part 247 that contain the highest percentage of recovered materials practicable, consistent with maintaining a satisfactory level of competition.

XXIX. Rehabilitation Act of 1973

Recipients must comply with the requirements of Section 504 of the Rehabilitation Act of 1973, Pub. L. 93-112 (1973), (codified as amended at 29 U.S.C. § 794,) which provides that no otherwise qualified handicapped individuals in the United States will, solely by reason of the handicap, be excluded from participation in, be denied the benefits of, or be subjected to discrimination under any program or activity receiving federal financial assistance.

XXX. Reporting of Matters Related to Recipient Integrity and Performance General Reporting Requirements.

If the total value of any currently active grants, cooperative agreements, and procurement contracts from all federal awarding agencies exceeds $10,000,000 for any period of time during the period of performance of this federal award, then the recipients must comply with the requirements set forth in the government-wide Award Term and Condition for Recipient Integrity and Performance Matters located at 2 C.F.R. Part 200, Appendix XII, the full text of which is incorporated here by reference in the award terms and conditions.

XXXI. Reporting Subawards and Executive Compensation Reporting of first tier subawards.

Recipients are required to comply with the requirements set forth in the government-wide award term on Reporting Subawards and Executive Compensation located at 2 C.F.R. Part 170, Appendix A, the full text of which is incorporated here by reference in the award terms and conditions.

XXXII. SAFECOM

Recipients receiving federal financial assistance awards made under programs that provide emergency communication equipment and its related activities must comply with the SAFECOM Guidance for Emergency Communication Grants, including provisions on technical standards that ensure and enhance interoperable communications.

XXXIII. Terrorist Financing

Recipients must comply with E.O. 13224 and U.S. laws that prohibit transactions with, and the provisions of resources and support to, individuals and organizations associated with terrorism. Recipients are legally responsible to ensure compliance with the Order and laws.

XXXIV. Trafficking Victims Protection Act of 2000 (TVPA) Trafficking in Persons.

Recipients must comply with the requirements of the government-wide financial assistance award term which implements Section 106 (g) of the Trafficking Victims Protection Act of 2000 (TVPA), codified as amended at 22 U.S.C. § 7104. The award term is located at 2 C.F.R. § 175.15,

the full text of which is incorporated here by reference.

XXXV. Universal Identifier and System of Award Management

Requirements for System for Award Management and Unique Entity Identifier Recipients are required to comply with the requirements set forth in the government-wide financial assistance award term regarding the System for Award Management and Universal Identifier Requirements located at 2 C.F.R. Part 25, Appendix A, the full text of which is incorporated here by reference.

XXXVI. USA PATRIOT Act of 2001

Recipients must comply with requirements of Section 817 of the Uniting and Strengthening America by Providing Appropriate Tools Required to Intercept and Obstruct Terrorism Act of 2001 (USA PATRIOT Act), which amends 18 U.S.C. §§ 175–175c.

XXXVII. Use of USDHS Seal, Logo and Flags

Recipients must obtain permission from their USDHS FAO prior to using the USDHS seal(s), logos, crests or reproductions of flags or likenesses of USDHS agency officials, including use of the United States Coast Guard seal, logo, crests or reproductions of flags or likenesses of Coast Guard officials.

XXXVIII. Whistleblower Protection Act

Recipients must comply with the statutory requirements for whistleblower protections (if applicable) at 10 U.S.C § 2409, 41 U.S.C. § 4712, and 10 U.S.C. § 2324, 41 U.S.C. §§ 4304 and 4310.

The remainder of this page is intentionally left blank.

ATTACHMENT 2
Reimbursement Checklist

DHSEM reserves the right to update this check list throughout the life of the grant to ensure compliance with applicable federal and state rules and regulations. ***Please only check the categories that apply to the reimbursement you are currently requesting.***

EQUIPMENT

- ☐ Have all invoices been included?
- ☐ Has AEL # been identified for each purchase?
- ☐ If service/warranty expenses are listed, are they only for the performance period of the grant?
- ☐ Has proof of payment been included? (e.g., canceled check, Electronic Funds Transfer (EFT) confirmation, or P-Card back up documentation which will include receipt with vendor, copy of credit card statement showing expense charged, and payment to credit card Company for that statement)

CONSULTANTS/CONTRACTORS

- ☐ Does the amount billed by consultant add up correctly?
- ☐ Has all appropriate documentation to denote hours worked been properly signed?
- ☐ Have copies of all planning materials and work product (e.g., meeting documents, copies of plans) been included? (If a meeting was held by recipient or contractor/consultant of recipient, an agenda and signup sheet with meeting date must be included).
- ☐ Has the invoice from consultant/contractor been included?
- ☐ Has proof of payment been included? (e.g., canceled check, Electronic Funds Transfer (EFT) confirmation, or P-Card back up documentation which will include receipt with vendor, copy of credit card statement showing expense charged, and payment to credit card Company for that statement).

SALARY POSITIONS (Note: this applies to positions billed under M&A)

- ☐ Have the following been provided: signed time sheet by employee and supervisor and proof that employee was paid for time worked (statement of earnings, copy of payroll check or payroll register)?
- ☐ Has a time period summary sheet been included for total claimed amount?
- ☐ Has a general ledger payroll report been included for total claimed amount? Ensure this report includes both employee and employer payroll information (i.e., benefits/contributions).
- ☐ Does the back-up documentation include a copy of the check stub per employee for the time period covered?
- ☐ Does the back-up documentation provided match the time period for which reimbursement is being requested?

OTHER:

- ☐ If EHP form needed – has copy of it and approval from USDHS/FEMA been included?

MATCHING FUNDS (IF APPLICABLE)

- ☐ Contributions are from Non-Federal funding sources.
- ☐ Contributions are from cash or in-kind contributions which may include training investments.
- ☐ Contributions are not from salary, overtime, or other operational costs unrelated to training.

This page is intentionally left blank.

ATTACHMENT 3
Glossary and Definitions

Applicant: When an entity applies for PA funding, it is the **Applicant**. Once the Applicant receives funding, it is either the **recipient, pass-through entity,** or a **sub-recipient**.

Authorized Equipment List (AEL): The Authorized Equipment List (AEL) is a list of approved equipment types allowed under FEMA's preparedness grant programs.

Backfill: The act of filling a position left by another employee who has been moved to another role.

Cost Match: Recipient or sub-recipient contribution. This can be cash (hard match) or third party in-kind (soft match). 2 C.F.R. 200.306.

Cost Sharing or Matching: The portion of project costs not paid by federal funds or contributions (unless otherwise authorized by federal statute). 2 C.F.R. 200.1 Cost sharing or matching.

Declared fire: An uncontrolled fire or fire complex, threatening such destruction as would constitute a major disaster, which the FEMA Regional Administrator has approved in response to a state's request for a fire management assistance declaration and in accordance with the criteria listed in 44 C.F.R. 204.21. Fire Management Assistance Declaration Criteria.

Disallowed costs: Those charges to a federal award that the federal awarding agency or pass-through entity determines to be unallowable, in accordance with the applicable federal statutes, regulations, or the terms and conditions of the federal award. 2 C.F.R. 200.1 Disallowed costs.

Demobilization: The process and procedures for deactivating, disassembling, and transporting back to their point of origin all resources that had been provided to respond to and support a declared fire.

Disaster: An emergency condition affecting all or part the state, overwhelming local resources, in which there is likely to be a significant recovery period. The Governor may request a Robert T. Stafford Act (Stafford Act) Disaster Declaration through FEMA, asking for the Public Assistance Program, Fire Management Assistance Program, Individual Assistance Program and Mitigation based upon known and estimated damage assessment data.

Disaster Recovery Reform Act of 2018 (DRRA): The DRRA represents the most comprehensive Emergency Management reform since the Post-Katrina Emergency Management Reform Act in 2006. It includes a larger and more reliable funding stream for pre-disaster mitigation, expanded assistance for individuals and households, and support for states, localities, tribes, and territories (SLTTs) to develop their own emergency management capabilities.

Emergency: A condition in which local and state emergency response agencies are overwhelmed by an incident to the point that federal assistance is needed. Unlike a disaster, an emergency does not have a recovery phase. The Governor may request a Stafford Act Emergency Declaration through FEMA, asking for the Public Assistance Program and/or Fire Management Assistance Grant.

Emergency Work: Work which must be done before, during and immediately after a disaster event to save lives and to protect improved property and public health and safety or to avert or lessen the threat of a major disaster. The FEMA Public Assistance emergency work Categories are:

- Category A (Debris Removal)
- Category B (Emergency Protective Measures)

Equipment: Tangible personal property (including information technology systems) having a useful life of more than one year and a per-unit acquisition cost which equals or exceeds the lesser of the capitalization level established by the non-federal entity for financial statement purposes, or $5,000. 2 C.F.R. 200.1 Equipment.

*Expenditures***:** Charges made by a non-federal entity to a project or program for which a federal award was received. 2 C.F.R. 200.1 Expenditures.

Federal Award: The federal financial assistance that a recipient receives directly from a federal awarding agency or indirectly from a pass-through entity. 2 C.F.R. 200.1 Federal award.

Federal Emergency Management Agency (FEMA): The federal agency responsible for coordinating disaster recovery efforts in partnership with state, local, and tribal governments.

Federal Share: The portion of the federal award costs that are paid using federal funds. 2 C.F.R. 200.1 Federal share.

FEMA/State Agreement: A formal, legal document between FEMA and the state or a tribal government giving the understandings, commitments, terms, conditions, and timelines for assistance resulting from a federal disaster, emergency, or fire declaration, declared by the President.

Governor's Authorized Representative (GAR): The person designated by the Governor to execute all necessary documents for disaster assistance programs on behalf of the state and local grant recipients. The GAR is responsible for state compliance with the FEMA/State Agreement. The GAR may also be designated as the State Coordinating Officer.

Hazard Mitigation: Mitigation is the effort to reduce loss of life and property by lessening the impact of disasters.

Hazard Mitigation (Sections 404 and 406): Section 406 Mitigation measures are specific to the mechanism of the declared disaster and are an integral part of the reconstructed work on a facility or will protect or benefit the repaired portion of the facility. These are different from mitigation measures that are considered for eligibility under the Hazard Mitigation Grant Program (HMGP) of Section 404 of the Stafford Act. In the HMGP program, measures are proposed that may involve facilities other than those damaged by the disaster, new facilities, or even non-structural measures such as the development of floodplain management regulations.

Incident Period: The time interval during which the declared disaster occurs. The Regional Administrator, in consultation with the Governor's Authorized Representative and the Principal Advisor will establish the incident period. Generally, costs must be incurred during the incident period to be considered eligible.

The declaration designates the incident period. The incident period is the span of time during which the federally declared incident occurs. This period varies in length, depending on the incident.

Improved Project: When performing restoration work on a damaged facility, a sub-recipient may use the opportunity to make improvements to the facility. Projects that incorporate such improvements are improved projects. The improved facility must have the same function and at least the equivalent capacity as that of the pre-disaster facility. Federal funding for improved projects is limited to the lesser of the following: the federal share of the approved estimated costs to restore the damaged facility to its pre-disaster design and function or the federal share of the actual cost of completing the improved project. The sub-recipient must obtain FEMA approval, via the NMDHSEM, for an improved project prior to

construction.

Indirect Costs: Costs a recipient or sub-recipient incurs for a common or joint purpose benefitting more than one cost objective that are not readily assignable to the cost objectives specifically benefited.

Joint Field Office (JFO): A temporary facility established in or near a declared disaster area to serve as the field headquarters for FEMA, other federal and state recovery personnel, and serve as the focal point for federal disaster operations, direction, coordination, and information.

Large Project: An approved project estimated to cost the same as or more than the large project threshold amount. The large project threshold is a dollar amount adjusted annually to reflect changes in the Consumer Price Index for all urban consumers. The large project threshold amount, applicable to all projects, is the amount in effect on the declaration date of the disaster, regardless of when project approval is made or when the work is performed.

Management Costs: Management costs are any indirect costs, any direct administrative costs, and any other administrative expenses associated with the administration of HMA awards and subawards. Management costs are provided under HMGP, HMGP Post Fire, BRIC and FMA. For the Hazard Mitigation Grant Program (HMGP) and Hazard Mitigation Grant Program Post Fire (HMGP Post Fire), recipients will be reimbursed no more than 15% of the total amount of the award, of which not more than 10% may be used by the recipient and 5% by the subrecipient. Under HMGP and HMGP Post Fire, recipients' Administrative Plans must include procedures for monitoring and reporting on subrecipient management costs before receiving funding for management costs. For Building Resilient Infrastructure and Communities (BRIC) and Flood Mitigation Assistance (FMA), recipients may apply for a maximum of 10% of the total funds requested in their application cost estimate (federal and non-federal shares) for management costs to support the sub-applications included as part of their award. Subapplicants for BRIC and FMA may apply for a maximum of 5% of the total funds requested in a sub-application for management costs. Additional information is available in FEMA Policy #104-11-1, Hazard Mitigation Grant Program Management Costs (Interim).

Pass-through Entity: A non-federal entity that provides a subaward to a sub-recipient to carry out part of a federal program. 2 C.F.R. 200.1 Pass through entity (PTE).

Performance Period for Hazard Mitigation Assistance: The period of time stipulated in the Sub-recipient Grant Agreement, as amended, during which the sub-recipient must finish the approved work. Projects completed after the active Period of Performance deadline will be considered ineligible.

Quarterly Financial Progress Report: The information in this report is used by NMDHSEM to monitor sub-recipient cash flow, performance, and project implementation to ensure proper use of federal funds.

Recipient: Formally referred to as the grantee or sub-grantee or applicant. Federally Recognized Indian Tribal Governments may also be Recipients if they so desire and if they meet FEMA requirements.

Recovery Officer: Aids in the administration of disaster recovery grant programs for statewide disasters and emergencies. Coordinates and co-administers disaster recovery grant programs, ensuring that they are implemented and carried out according to state and federal program requirements.

Recovery Unit: This is the unit within the NMDHSEM Response and Recovery Bureau designated as responsible for the programmatic administration of the FEMA PA and FMAG Programs.

Recovery Unit Manager: Responsible for administering and supervising staff responsible for federal and state disaster recovery programs and serves as the Deputy State Coordinating Officer (SCO) for

emergencies or major disaster declarations.

Response & Recovery Bureau Chief: Responsible for supervising staff responsible for federal and state disaster recovery programs and staff that provides operational response capabilities to support the citizens of New Mexico. This position also serves as State Coordinating Officer (SCO) for emergencies or major disaster declarations.

Request for Approval Form: Used by sub-recipient to request approval from NMDHSEM to expend funds for previously identified and approved projects. Approval must be received prior to expenditure.

Small Project: An approved project estimated to cost less than the large project threshold amount.

State Coordinating Officer (SCO): The person designated by the Governor to coordinate state and local disaster assistance efforts with those of the federal government. The GAR may also be the SCO. The Governor will name the GAR and the SCO in the FEMA/State Agreement.

Sub-recipient: Formally referred to as the sub-grantee or applicant, is a state agency, local government, tribal government, other legal governmental entity, or a private non-profit (PNP) organization that receives a sub-grant award and which is accountable to the state for the use of the funds provided. The FEMA reserves the final decision as to sub-recipient eligibility.

Supplanting: When a state or unit of local government reduces state or local funds for an activity specifically because federal funds are available (or expected to be available) to fund that same activity. When supplanting is not permitted, federal funds must be used to **supplement** existing state or local funds for program activities and may not replace state or local funds that have been appropriated or allocated for the same purpose. Additionally, federal funding may not replace state or local funding that is required by law. If a question of supplanting arises, the sub-recipient or grantee will be required to substantiate that the reduction in non-federal resources occurred for reasons other than the receipt or expected receipt of federal funds. US Department of Justice Office of Justice Programs, Grants 101.

The remainder of this page is intentionally left blank.

ATTACHMENT 4
Acronyms

AEL: Authorized Equipment List
AGAR: Alternate Governor's Authorized Representative
ASB: Administrative Services Bureau of NMDHSEM
CFDA: Catalog of Federal Domestic Assistance
DAC: Direct Administrative Costs
DOT: Department of Transportation
DPS: Department of Public Safety
DRRA: Disaster Recovery Refo1m Act of 2018
DSCO: Deputy State Coordinating Officer
DSIBD: Deputy State Infrastructure Branch Director
DSPAGS: Deputy State Public Assistance Group Supervisor
EMAC: Emergency Management Assistance Compact
EMMIE: Emergency Management Mission Integrated Environment
EMNRD: Energy, Minerals and Natural Resources Department
FEMA: Federal Emergency Management Agency
FFATA- Federal Funding Accountability and Transparency Act
FMAG - Fire Management Assistance Grant
GAR: Governor's Authorized Representative
IMAS: Intrastate Mutual Aid System
INF: Immediate Needs Funding
IOF: Initial Operating Facility
JFO: Joint Field Office
NSPO: Net Small Project Overrun
NMDHSEM: New Mexico Department of Homeland Security and Emergency Management
ONA: Other Needs Assistance
OMB: Office of Management and Budget
PA: Public Assistance
PAGS: Public Assistance Group Supervisor
PAPPG: Public Assistance Program and Policy Guide
PDA: Preliminary Damage Assessment
PDMG: Program Delivery Manager
PIO: Public Information Officer
PNP: Private Non-Profit
POP: Period of Performance
PW: Project Worksheet
R&R: Response & Recovery Bureau
REC: Record of Environmental Consideration
RO: Recovery Officer
RP A - Request for Public Assistance
SCO: State Coordinating Officer
SOW: Scope of Work
SHARE: New Mexico Statewide Human Resources, Accounting, and Management Reporting System

SIBD: State Infrastructure Branch Director
SPAGS: State Public Assistance Group Supervisor
SPAO: State Public Assistance Officer
USDHS: United States Department of Homeland Security
USFS: US Forest Service
VFO: Virtual Field Office

The remainder of this page is intentionally left blank.

City of Santa Fe New Mexico

Finance Department

Project Ledger Request Form

Date of Request: 09/11/2024 REC 9.27/24

Project Title: Arroyo de los Pinos BioInfiltration Basins

Project Type: ☒ CIP ☒ Grant ☐ Internal tracking

Project Id: OEM2523102
Grant Id: F2514 &S2536
Financial Analyst: Erika Lujan
PAL/CT (Finance Use Only)

Department: General Government/OEM

Project Manager: Kyle Morgan Ext: 629-2539

Project Date Range: 07/2024-01/25/2027

Create Fixed Asset ☐

☒ Multi-Funding (complete all funding sources, should equal 100%)

Funding Source: FEMA Sub-Grant No. DR-5430-0012-NM % of Funding: 75% -$277,081 (277080.50)

MUNIS Org:2310411/2212850 MUNIS Object: 490580 Awarded Amount: $263,222/$13,859

Funding Source: Department of Finance and Administration % of Funding: 25%
(87740.41)

MUNIS Org: 2310411 MUNIS Object: 490210 Awarded Amount: $87,741

Expense String Phase

A project must have at least one phase identified, this can be used as an additional level of tracking, for example, CIP - design, start-up cost, etc. For grants can be used as reimbursable types, such as transportation, salaries.

(You can create more than one phase and you can default MUNIS Orgs and Objects, optional)

Phase: Design MUNIS Org: 2310411 MUNIS Object: 572960
Phase: Project Management MUNIS Org: 2212850 MUNIS Object: 510300
Phase: MUNIS Org: MUNIS Object:

Grants Only (list all grants if applicable)

Grantor Name: FEMA-DR54300012NM Awarded Amount: 277080.50

AR Charge Code: 2212850.490580 ☐ Grant funds multiple projects
(Complete a form for each project)

Grantor Id: Federal CFDA (if applicable) 97.039

Grantor Name: DFA MATCH GRANT-MG25-085 Awarded Amount: 87740.41

AR Charge Code: 2310411.490210 ☐ Grant funds multiple projects
(Complete a form for each project)

Grantor Id: Federal CFDA (if applicable) N/A

(If grants please provide all grant award documents with form) ☒ Attached to Grant

HMGP_2023_ADLP_Council_Packet_2024-10-23

Final Audit Report 2024-11-01

Created:	2024-10-30
By:	Justin Gonzales (jmgonzales@santafenm.gov)
Status:	Signed
Transaction ID:	CBJCHBCAABAAD5PADKaUC_C0nFyviJUC1JSzl4Y7Iara

"HMGP_2023_ADLP_Council_Packet_2024-10-23" History

Document created by Justin Gonzales (jmgonzales@santafenm.gov)
2024-10-30 - 4:41:08 PM GMT- IP address: 63.232.20.2

Document emailed to BRIAN WILLIAMS (bgwilliams@santafenm.gov) for signature
2024-10-30 - 4:46:13 PM GMT

Email viewed by BRIAN WILLIAMS (bgwilliams@santafenm.gov)
2024-10-30 - 5:01:35 PM GMT- IP address: 104.47.65.254

Document e-signed by BRIAN WILLIAMS (bgwilliams@santafenm.gov)
Signature Date: 2024-10-30 - 5:02:04 PM GMT - Time Source: server- IP address: 63.232.20.2

Document emailed to rawheeler@santafenm.gov for signature
2024-10-30 - 5:02:07 PM GMT

Email viewed by rawheeler@santafenm.gov
2024-10-30 - 5:03:00 PM GMT- IP address: 104.47.64.254

Signer rawheeler@santafenm.gov entered name at signing as RW
2024-10-30 - 5:03:24 PM GMT- IP address: 63.232.20.2

Document e-signed by RW (rawheeler@santafenm.gov)
Signature Date: 2024-10-30 - 5:03:26 PM GMT - Time Source: server- IP address: 63.232.20.2

Document emailed to HENRI HAMMOND-PAUL (hmhammondpaul@santafenm.gov) for signature
2024-10-30 - 5:03:30 PM GMT

Email viewed by HENRI HAMMOND-PAUL (hmhammondpaul@santafenm.gov)
2024-10-31 - 3:34:43 PM GMT- IP address: 104.47.64.254

Powered by Adobe Acrobat Sign

Document e-signed by HENRI HAMMOND-PAUL (hmhammondpaul@santafenm.gov)
Signature Date: 2024-10-31 - 3:35:07 PM GMT - Time Source: server- IP address: 63.232.20.2

Document emailed to mtbonifer@santafenm.gov for signature
2024-10-31 - 3:35:09 PM GMT

Email viewed by mtbonifer@santafenm.gov
2024-10-31 - 4:10:39 PM GMT- IP address: 104.47.64.254

Signer mtbonifer@santafenm.gov entered name at signing as Matthew Bonifer
2024-10-31 - 4:34:13 PM GMT- IP address: 63.232.20.2

Document e-signed by Matthew Bonifer (mtbonifer@santafenm.gov)
Signature Date: 2024-10-31 - 4:34:15 PM GMT - Time Source: server- IP address: 63.232.20.2

Document emailed to ajhopkins@santafenm.gov ajhopkins@santafenm.gov (ajhopkins@santafenm.gov) for signature
2024-10-31 - 4:34:18 PM GMT

Email viewed by ajhopkins@santafenm.gov ajhopkins@santafenm.gov (ajhopkins@santafenm.gov)
2024-10-31 - 4:37:01 PM GMT- IP address: 104.47.65.254

Document e-signed by ajhopkins@santafenm.gov ajhopkins@santafenm.gov (ajhopkins@santafenm.gov)
Signature Date: 2024-10-31 - 4:40:10 PM GMT - Time Source: server- IP address: 63.232.20.2

Document emailed to EMILY OSTER (ekoster@santafenm.gov) for signature
2024-10-31 - 4:40:12 PM GMT

Email viewed by EMILY OSTER (ekoster@santafenm.gov)
2024-11-01 - 5:12:14 PM GMT- IP address: 104.47.65.254

Document e-signed by EMILY OSTER (ekoster@santafenm.gov)
Signature Date: 2024-11-01 - 5:22:00 PM GMT - Time Source: server- IP address: 63.232.20.2

Document emailed to JOHN BLAIR (jwblair@santafenm.gov) for signature
2024-11-01 - 5:22:04 PM GMT

Email viewed by JOHN BLAIR (jwblair@santafenm.gov)
2024-11-01 - 6:43:55 PM GMT- IP address: 104.47.65.254

Signer JOHN BLAIR (jwblair@santafenm.gov) entered name at signing as John Blair
2024-11-01 - 6:44:18 PM GMT- IP address: 63.232.20.2

Document e-signed by John Blair (jwblair@santafenm.gov)
Signature Date: 2024-11-01 - 6:44:20 PM GMT - Time Source: server- IP address: 63.232.20.2

Agreement completed.

2024-11-01 - 6:44:20 PM GMT

Signature: XAVIER VIGIL
XAVIER VIGIL (Nov 1, 2024 16:12 MDT)

Email: xivigil@santafenm.gov

24-0636 New Mexico Department of Finance and Administration

Final Audit Report 2024-11-01

Created:	2024-11-01
By:	XAVIER VIGIL (xivigil@santafenm.gov)
Status:	Signed
Transaction ID:	CBJCHBCAABAAuQyI49ZQ_XsOfi4kdRdNp10U4FphOD1O

"24-0636 New Mexico Department of Finance and Administratio n" History

Document created by XAVIER VIGIL (xivigil@santafenm.gov)
2024-11-01 - 10:10:55 PM GMT- IP address: 63.232.20.2

Document e-signed by XAVIER VIGIL (xivigil@santafenm.gov)
Signature Date: 2024-11-01 - 10:12:13 PM GMT - Time Source: server- IP address: 63.232.20.2

Document emailed to GERALYN CARDENAS (gfcardenas@santafenm.gov) for signature
2024-11-01 - 10:12:14 PM GMT

Email viewed by GERALYN CARDENAS (gfcardenas@santafenm.gov)
2024-11-01 - 10:16:40 PM GMT- IP address: 104.47.65.254

Document e-signed by GERALYN CARDENAS (gfcardenas@santafenm.gov)
Signature Date: 2024-11-01 - 10:16:49 PM GMT - Time Source: server- IP address: 63.232.20.2

Agreement completed.
2024-11-01 - 10:16:49 PM GMT

Powered by Adobe Acrobat Sign

CITY OF SANTA FE

Date: October 23, 2024

To: Governing Body

Via: Henri Hammond-Paul, Community Health and Safety Director
HENRI HAMMOND-PAUL (Oct 31, 2024 09:35 MDT)
Brian Moya, Fire Department Chief
Brian J Moya (Oct 30, 2024 11:02 MDT)

From: **Brian Williams, Office of Emergency Management Director**
Nathan Miller, Wildland Fire Superintendent
BRIAN WILLIAMS (Oct 30, 2024 11:01 MDT)

Subject: **Hazard Mitigation Grant Program Grant Approval – Hazard Mitigation Plan and Wildfire Risk Assessment Plans**

ITEM AND ISSUE:
Request Approval of the 2023 Hazardous Mitigation Grant Program (HMGP) Sub-Grant Agreement DR-4652-0011-NM in the Total Amount of $163,509.97 with the New Mexico Department of Homeland Security and Emergency Management for Updating the City of Santa Fe Hazard Mitigation Plan and Development of a Wildfire Risk Assessment. Brian Williams, Director Office of Emergency Management, bgwilliams@santafenm.gov.

Request Approval of a New Mexico Match Fund Grant 24-ZI5044- MG25-84 in the Total Amount of $38,934.25 with the New Mexico Department of Finance and Administration for Federal Grant Match Funds. Brian Williams, Director Office of Emergency Management, bgwilliams@santafenm.gov.

Request Approval of a FY25 BAR to Budget $163,509.97 in Awarded Grant Funds to the Office of Emergency Management Professional Contracts.

Action Requested: Grant Approval (2); BAR approval

BACKGROUND AND SUMMARY:
The City of Santa Fe applied for this reimbursable grant through the New Mexico Department of Homeland Security and Emergency Management (DHSEM) and the Federal Emergency Management Agency (FEMA). The Hazard Mitigation Grant Program (HMGP) supports states, local communities, tribes and territories as they undertake hazard mitigation projects, reducing the risks they face from disasters and natural hazards.

The Office of Emergency Management and the Santa Fe Fire Department Wildland Fire Division coordinated to secure this grant for developing a comprehensive update to the City of Santa Fe's Hazard Mitigation Plan (HMP), as well as developing a new citywide Wildfire Risk Assessment. Both efforts will be contractor lead in accordance with relevant requirements from FEMA.

The completed Hazard Mitigation Plan will be used to prioritize future mitigation projects as well as updates to the City's Threat and Hazard Identification and Risk Assessment, and Integrated Preparedness Plans.

The Wildfire Risk Assessment will additionally include an analysis of existing wildland firefighting capabilities and the City's current preparedness for responding to wildfire threats, as well as recommendations for improving these capabilities.

The Office of Emergency Management applied for matching funds to cover the local share through the New Mexico Department of Finance and Administration (DFA) after receiving the federal grant award. These funds will cover the entirety of the local share requirement (25%). The goal of this program is to leverage state funds to allow for increased grant applications and awards for local communities throughout the state. The HMGP grant amount also includes $7,772.05 in 100% federally funded subrecipient management costs to assist with capacity in managing the grant.

The Office of Emergency Management will manage both grants and the Hazard Mitigation Plan project, while the Fire Department will manage the Wildfire Risk Assessment, with input and assistance from the Office of Emergency Management and other stakeholders.

The term of the grant ends on November 14, 2027.

PROCUREMENT METHOD:
Not Applicable. Grant approval only.

Chief Procurement Officer Approval:_____ **Date:**_____
Comment/Exceptions:_____

Supporting Information:

CONTRACT NUMBER:
The FY25 Project ledger number is OEM2522101

SOURCE/REVENUE: ☐Expense ☒Revenue

The funding source is:
Federal Share
Fund Name/Number: Emergency Services/Fund 231
Munis Org Name/Number: Emergency Management/2212850
Munis Object Name/Number: Fed Grant (FEMA)/490580

Local Share
Fund Name/Number: Emergency Services/Fund 231
Munis Org Name/Number: Emergency Management/2212850
Munis Object Name/Number: State Grant (DFA)/490210

List grant award number: *DR-4652-0011-NM (FEMA) / 24-ZI5044- MG25-84 (DFA)*

Grant Manager / Accounting Officer Approval: Matthew Bonifer
Matthew Bonifer (Oct 31, 2024 10:10 MDT) **Date:** 10/31/2024
Comment/Exceptions: _____

Project Ledger #: OEM2522101

Budget Officer Approval: Andy Hopkins **Date:** 10/31/2024
Comment/Exceptions: _____

CAPITAL ASSET (will this procurement result in a tangible item that costs more than $5,000?):

☐Yes | ☒ No

 # (if known): _____

Repair or Replacement of Existing Equipment:

☐Yes | ☒ No
If yes -> ☐Repair | ☐ Replacement

Please explain: _____

Capital Project:
(New and improvement projects that are going to cost $10,000 or more)
☐ Yes | ☒ No

Project Ledger #: _____

Anticipated length of project: 24 months _____

Asset Manager Approval: _____ **Date:** _____
Comment/Exceptions: _____

Department Approvals:
IT Components: ☐ **Yes | ☒ No**
Vehicles: ☐ **Yes | ☒ No**
Facilities, Furniture, Fixtures, Equipment: ☐ **Yes | ☒ No**

Approval: _____ **Title:** _____ **Date**: _____
Approval: _____ **Title:** _____ **Date**: _____
Comment & Exceptions: _____

Department Contract Administrator Contact Info:
Justin Gonzales, jmgonzales@santafenm.gov

ATTACHMENTS:

1. Federal Sub-Recipient Grant Agreement
2. State Grant Agreement
3. Budget Amendment Resolution

Log # *{Finance use only}*:	
Journal # *{Finance use only}*:	

City of Santa Fe, New Mexico
BUDGET AMENDMENT RESOLUTION (BAR)

DEPARTMENT / DIVISION NAME	DATE
Public Works / Stormwater CIP	9/11/2024

ITEM DESCRIPTION	ORG	OBJECT	PROJECT	INCREASE	DECREASE
EXPENDITURES				*{enter as positive #}*	*{enter as negative #}*
PROFESSIONAL CONTRACTS - Project Costs	2212850	510300	OEM2522101	155,737	
PROFESSIONAL CONTRACTS - Grant Management Costs	2212850	510300	OEM2522101	7,772	
REVENUES				*{enter as negative #}*	*{enter as positive #}*
FEMA - Hazard Mitigation Plan / Wildfire Risk Assessment	2212850	490580	OEM2522101	(116,803)	
DFA - Hazard Mitigation Plan / Wildfire Risk Assessment	2212850	490210	OEM2522101	(38,934)	
FEMA - Subrecipient Management Costs	2212850	490580	OEM2522101	(7,772)	
				$ (0.00)	$ -

JUSTIFICATION: *(use additional page if needed)*
--Attach supporting documentation/memo

FY 25 budget increase for subrecipient grant award: DR-5430-0011-NM: FEMA Hazard Mitigation Grant for Hazard Mitigation Plan Update and Wildfire Risk Assessment in the amount of $116,803.77 for Planning and $7,772.05 for Management Costs.

Expires 11/14/2027

FY 25 budget increase for Department of Finance and Administration State Matching Grant in the amount of $38,934.25 to cover 25% local match requirement of FEMA Grant (DR-5430-0012-NM). Expires 5/14/2028

{Complete section below if BAR results in a net change to ANY Fund}

Fund(s) Affected	Fund Balance Increase/(Decrease)
TOTAL:	**0**

Kyle Morgan — 9/11/2024
Prepared By *{print name}* — Date

Division Director Signature *{optional}* — Date

HENRI HAMMOND-PAUL (Oct 31, 2024 09:35 MDT) — 10/31/2024
Department Director Signature — Date

{Use this form for Finance Committee/ City Council agenda items ONLY}

CITY COUNCIL APPROVAL

City Council Approval Date:

Agenda Item #:

Andy Hopkins — 10/31/2024
Budget Officer — Date

Finance Director *{≤ $5,000}* — Date

City Manager *{≤ $60,000}* — Date

New Mexico
Department *of* Finance
and Administration

407 Galisteo St,
Santa Fe, NM 87501
(505) 827-4985

Governor Michelle Lujan Grisham
Cabinet Secretary Wayne Propst

Infrastructure Planning & Development Division
Wesley Billingsley, Division Director

RECIPIENT:

City of Santa Fe

APPROPRIATION NUMBER:	ALLOCATION AMOUNT:	REVERSION DATE:
24-ZI5044- MG25-84	$38,934.25	Six (6) months after the end date of the associated federal grant's period of performance.

ALLOCATION PURPOSE

$38,934.25 for costs to meet cost sharing requirements for City of Santa Fe Hazard Mitigation Plan Update & Wildfire Risk Assessment. Funds unexpended by the date specified in the period of performance terms of your federal grant agreement, will be reverted to the State of New Mexico within 6 months of the federal grant closeout.

ALLOCATION DISBURSEMENT

100% of the allocated funds will be disbursed upon execution of the agreement. The Allocation Recipient agrees to submit Annual reports using Exhibit A, Match Fund Annual Report Form, providing updates on the status of the expenditures from this appropriation. The Recipient also understands and agrees to use the allocated funds in accordance with the New Mexico Match Fund Policy.

CERTIFICATION

I hereby certify that City of Santa Fe

1. Will only use the allocated funds to carry out and/or perform activities described in allocation language.
2. Will submit annual reporting through the Match Fund Annual Report link.
3. Will adhere to the Match Fund policy.
4. Will adhere to the provisions of Attachment A- Special Provisions

John Blair
John Blair (Nov 1, 2024 12:45 MDT)

City Manager, **City of Santa Fe** — Date: 11/01/2024

Emily K. Oster

Finance Director, **City of Santa Fe** — Date: 11/01/2024

PUBLICITY

Any Publicity regarding this agreement must not be released without prior written approval from the DFA. For purposes of this agreement, "Publicity" means notices, informational pamphlets, press releases, email response, research, reports, signs, and similar public notices prepared by or for the Subrecipient or jointly with others. The Recipient shall not issue, without consent of the DFA, any press release, or make any public announcement with respect to this agreement. In the performance of responsibilities under this agreement, the Recipient agrees to obtain approval of the DFA in advance with respect to all Public Relations, all communications with media, or all communications with any other member of the public with respect to this agreement, except to acknowledge that an agreement does exist. For purposes of this agreement, "Public Relations" includes community relations and means those activities dedicated to maintaining the image of the DFA or maintaining or promoting understanding and favorable relations with the community or public at large or any segment of the public. For violations of this provision, as determined solely by the DFA, the DFA reserves the right to terminate this agreement.

New Mexico
Department *of* Finance
and Administration

407 Galisteo St,
Santa Fe, NM 87501
(505) 827-4985

Governor Michelle Lujan Grisham
Cabinet Secretary Wayne Propst

Infrastructure Planning & Development Division
Wesley Billingsley, Division Director

APPROVAL

In accordance with the authority conferred on the Department of Finance & Administration by the statute appropriating these funds, I hereby approve this certification for MG25-84 in the amount of $38,934.25.

Wesley Billingsley
Director, Infrastructure Planning & Development Division

Date

New Mexico
Department *of* Finance
and Administration

407 Galisteo St,
Santa Fe, NM 87501
(505) 827-4985

Governor Michelle Lujan Grisham
Cabinet Secretary Wayne Propst

Infrastructure Planning & Development Division
Wesley Billingsley, Division Director

OPTIONAL ATTACHMENT A
SPECIAL CONDITIONS

The grant award requires grantees' accounting methods and procedures, including their internal control framework, to be scrutinized, so as to safeguard State appropriations and assets acquired with such appropriations. This Matching Grant Special Grant Condition(s) **Attachment A** is necessary pursuant to Executive Order 2013-006 (2.A.2.a-c, if applicable), due to the Grantees' material weaknesses, significant deficiencies, or findings that raised concerns as to the ability to expend grant funds in accordance with applicable law in the organization's FY23 audit. The Special Conditions identified below apply to the authorized agent, City of Santa Fe.

Procurement - All purchases or contracts the Grantee enters that shall use funding from the Department capital appropriations grant must be approved by the Department prior to the initiation of implementing purchasing documents. The Grantee shall receive such prior approval via official correspondence from the Department, which may be through letter or email. The Grantee shall submit the following to the Department in pursuit of prior approval: purchasing policies and procedures, CFO certification, documentation of management and program approval, policies and procedures governing purchasing and contracting, a copy of the current procurement and contracting policies, and documentation regarding informing staff responsible for purchasing and contracting on such policies and procedures.

Cash Management – policies and procedures on cash management of federal funds. Provide procedures used to draw and disburse federal funds. Provide procedures to reconcile draw amounts, deposits and disbursements; and to prepare federal cash reporting documents to ensure compliance with federal regulations.

The City of Santa was required to and has provided sufficient documentation regarding procurement and cash management as referenced in the City of Santa Fe's FY23 Audit file. Therefore, the criteria to enter into this agreement have been met.

Wesley Billingsley Director, Infrastructure Planning & Development Division	Date

New Mexico
Department *of* Finance
and Administration

407 Galisteo St,
Santa Fe, NM 87501
(505) 827-4985

Governor Michelle Lujan Grisham
Cabinet Secretary Wayne Propst

Infrastructure Planning & Development Division
Wesley Billingsley, Division Director

Match Fund Annual Report Form
Exhibit A

Appropriation Recipient: _____

Appropriation Number: _____

Use of Appropriation Funds	**Amount**
Personnel Expenses	$ 0.00
Contract Expenses	$ 0.00
Other Expenses	$ 0.00
Total Amount of Appropriation Funds Expended	$ 0.00

Narrative *Describe the outcomes, results, benefit, and or uses of the appropriation funds*

IN WITNESS WHEREOF, the City of Santa Fe has agreed to this Grant Award as of the date of the signature by the required approval authorities below.

ATTEST:

_____
GERALYN CARDENAS, INTERIM CITY CLERK

CITY ATTORNEY'S OFFICE:

Oct 14, 2024
REBECCA MNUK-HERRMANN, ASSISTANT CITY ATTORNEY

Match Fund Grant Agreement MG25-84 with CoSF signature page

Final Audit Report 2024-10-14

Created:	2024-10-08
By:	Amy Cawthon (amcawthon@santafenm.gov)
Status:	Signed
Transaction ID:	CBJCHBCAABAASuWLZ1sP1EGivkr6LBS-t0LZF5Q-ob_I

"Match Fund Grant Agreement MG25-84 with CoSF signature page" History

Document created by Amy Cawthon (amcawthon@santafenm.gov)
2024-10-08 - 5:31:47 PM GMT- IP address: 63.232.20.2

Document emailed to Rebecca Mnuk-Herrmann (ramnukherrmann@santafenm.gov) for signature
2024-10-08 - 5:32:18 PM GMT

Email viewed by Rebecca Mnuk-Herrmann (ramnukherrmann@santafenm.gov)
2024-10-14 - 10:00:27 PM GMT- IP address: 174.240.19.127

Document e-signed by Rebecca Mnuk-Herrmann (ramnukherrmann@santafenm.gov)
Signature Date: 2024-10-14 - 10:00:50 PM GMT - Time Source: server- IP address: 174.240.19.127

Agreement completed.
2024-10-14 - 10:00:50 PM GMT

Powered by Adobe Acrobat Sign

State of New Mexico
DEPARTMENT OF HOMELAND SECURITY & EMERGENCY MANAGEMENT
P.O. Box 27111
Santa Fe, NM 87502

SUB-RECIPIENT GRANT AGREEMENT
HAZARD MITIGATION GRANT PROGRAM

CFDA 97.039 : Hazard Mitigation Grant Program

1. SUB-GRANT NO.	2. SUB-RECIPIENT NAME		3. PROJECT NAME
DR-4652-0011-NM	City of Santa Fe		City of Santa Fe Hazard Mitigation Plan Update & Wildfire Risk Assessment
4. STATE DFA VENDOR NUMBER	**5. EIN NUMBER**	**6. SAM UEI NUMBER**	**7. CAGE CODE**
54360	85-6000168	QLN2YKMMJ8X6	4C987
8. SUB-RECIPIENT PHYSICAL ADDRESS	**9. SUB-RECIPIENT REMIT ADDRESS**		
200 Lincoln Ave, Santa Fe, NM 87501	-		
10. DHSEM CONTACT NAME:	**11. CONTACT DESK PHONE:**	(225) 313-1774	
Natalie West	**CONTACT EMAIL ADDRESS:**	DHSEM.mitigation@dhsem.nm.gov cc: natalie.west@dhsem.nm.gov	
12a. PERFORMANCE PERIOD START DATE	7/23/2024	**12b. PERFORMANCE PERIOD END DATE**	11/14/2027
13. TOTAL AWARD AMOUNT:	$163,509.07		
13a. FEDERAL SHARE	**13b. LOCAL SHARE**	**13c. STATE SHARE**	
$124,574.82	$38,934.25	$0.00	

14a. NAME OF PROJECT AWARD		14b. FEDERAL SHARE	14c. NON-FEDERAL SHARE
1	Contractual	$113,104.79	$37,701.59
2	Travel	$3,697.98	$1,232.66
3	SRMC	$7772.05	
TOTAL AMOUNT OF PROJECT		$124,574.82	$38,934.25

WHEREAS The State of New Mexico will serve as the "pass-through entity" with respect to the State's role in providing sub-awards and administering grant assistance provided to sub-recipients and may, subject to a Memorandum of Agreement, directly support project development and administration.

WHEREAS funding has been obligated from the Federal Emergency Management Agency pursuant to a request by the applicant, The Sub-Recipient, City of Santa Fe.

NOW, THEREFORE, it is mutually understood and agreed between the recipient NMDHSEM, and **City of Santa Fe** hereinafter referred to as "sub-recipient," as follows:

ARTICLE 1: REQUIREMENTS AND ASSURANCES

A. The sub-recipient hereby agrees that the performance period for the grant identified on Page 1, Box 1. is consistent with the performance period identified on Page 1, Box 12a. and 12b. This Sub-recipient Grant Agreement, as amended, shall remain open for administrative purposes if necessary to achieve final payment and financial reconciliation.

B. The sub-recipient hereby agrees that the sub-recipient official signing this Sub-recipient Grant Agreement certifies that all financial expenditures, including all supporting documents submitted for reimbursement, have been incurred by the sub-recipient and are eligible and allowable expenditures consistent with the guidelines for this award. The sub-recipient agrees to follow reasonable professional standards in all financial management and bookkeeping procedures necessary to carry out this agreement.

C. The sub-recipient hereby agrees that no member, officer, or employee of the sub-recipient organization, or its designees or agents, no member of the governing body of the locality in which the program is situated, and no other public official of such locality or localities who exercises any functions or responsibilities with respect to the program during his or her tenure or for one year after that, shall have any interest, direct or indirect, in any contract or subcontract, or the process thereof, for work to be performed in connection with this Sub-recipient Grant Agreement; the sub-recipient shall incorporate in all such contracts a provision prohibiting such interest pursuant to the purposes of this Sub-recipient Grant Agreement.

D. The sub-recipient hereby agrees that it understands and agrees that it cannot use any federal funds, either directly or indirectly, in support of the enactment, repeal, modification, or adoption of any law, regulation, or policy, at any level of government, without the express written approval of the State of New Mexico or FEMA.

E. The sub-recipient hereby agrees that FEMA reserves a royalty-free, non-exclusive, and irrevocable license to reproduce, publish, or otherwise use and authorize others to use, for federal government purposes: (1) the copyright in any work developed under this Sub-recipient Grant Agreement; and (2) any rights of copyright to which the sub-recipient purchases ownership with federal support. The sub-recipient agrees to consult with FEMA through NMDHSEM regarding allocating any patent rights that arise from or are purchased with this funding.

F. The sub-recipient hereby agrees that signatures of the sub-recipient officials on this Sub-recipient Grant Agreement attest to the sub-recipient's understanding, acceptance, and compliance with Lobbying, Debarment, Suspension, and Other Responsibility Matters; Drug- free Workplace; Conflict of Interest, and Non-Supplanting certifications. Federal funds will not be used to supplant state or local funds. Federal funds will be used to supplement existing sub-recipient funding to augment program activities and not replace those funds which have been appropriated in the budget for the same purpose.

G. The sub-recipient hereby agrees that their accounting system allows for the separation of fund

sources. Funding provided under this Sub-recipient Grant Agreement cannot be commingled with funds from other federal, state, or local agencies, and each project must be accounted for separately.

H. The sub-recipient hereby agrees that it shall comply with applicable Federal Civil Rights Laws and Regulations: Title VI of the Civil Rights Act of 1964, Section 504 of the Rehabilitation Act of 1973, Title IX of the Education Amendments of 1972, Age Discrimination Act of 1975, and Americans with Disabilities Act of 1991. The sub-recipient will take reasonable steps to ensure Limited English Proficient (LEP) persons have meaningful access to its programs and activities. Executive Order 13379 Individuals with Disabilities in Emergency Preparedness, requires the government to support safety and security for individuals with disabilities in situations involving disasters, including earthquakes, tornadoes, fires, floods, hurricanes, and acts of terrorism.

I. The sub-recipient hereby certifies that for its employees, it has an Affirmative Action Plan/Equal Employment Opportunity Plan (EEOP) if not exempted by the Federal Government or New Mexico rule or statute. An EEOP is not required for sub-recipients of less than $25,000 or fewer than 50 employees.

J. The sub-recipient hereby certifies that its employees are eligible to work in the United States as verified by Form I–9, Immigration & Naturalization Service Employment Eligibility.

K. The sub-recipient hereby agrees that it is the responsibility of the sub-recipient to fully understand and comply with the requirements of the following, where such requirements apply to the sub-recipient set forth in:

1. 2 C.F.R. § 200: Code of Federal Regulations
2. 44 C.F.R. parts 7, 9, 10, 13, 14, 17, 18, 25, 206, 220, 221, 44 C.F.R. Part 209, 2 C.F.R. Part 200 and any other applicable FEMA policy memoranda and guidance documents
3. FEMA Hazard Mitigation Assistance Program and Policy Guide
4. New Mexico State Procurement Code
   New Mexico Administrative Code Title 2 – Public Finance https://www.srca.nm.gov/nmac-home/nmac-titles/title-2-public-finance/

ARTICLE 2: REIMBURSEMENT OF FUNDS

The NMDHSEM will apply the following procedures for making payments to sub-recipients:

A. Payment of Funds, General: Once FEMA has obligated funds and NMDHSEM has budgeted and encumbered those funds, the Cabinet Secretary is authorized to advance funds, as permissible, and to consider requests for payments for progress and completion based on proper review and approvals, in accordance with the sub-grant agreement or amendment as described below. Review and audit of expending and accounting of federal awards and state funds will be conducted to ensure records, reports, and documentation for compliance and tracing of funds are accounted for; 2 C.F.R. §§ 200.302(b)(6), 200.305(a). The State Department of Finance and Administration (DFA) may require additional supporting data and documents prior to disbursement of funds.

B. Reimbursement shall be based upon authorized and allowable expenditures consistent with the project narrative, grant guidelines, and timely submission of Financial and Performance Progress Reports. Reimbursement of expenditures shall be requested quarterly or monthly if need be for expenditures within the performance period. A minimum of 25% (of the total project cost) in the non-federal match must be included on each request for reimbursement. All expenditures must be supported with source documentation (e.g., copies of proof of payment, invoices, receipts, timesheets

with name/rate/hours and certified, breakdown of expenditures based on FEMA approved budget, warrants, a brief description of work done, required deliverables, etc.). Request for reimbursement will not be processed if quarterly financial or performance reports are delinquent. The final payment of 15% will not be made until DHSEM verifies that all activities are complete. All payments shall be made on an actual cost reimbursement basis.

C. Contracts: All requests for proposals/bids, sole–source procurements, single vendor responses to a competitive bid, and contracts require DHSEM pre–approval prior to implementation. The relevant contract must accompany requests for reimbursement for contractual services.

D. Local Match: Local matching funds must clearly support the source, the amount, and the timing of all matching contributions. When requesting reimbursement, the match percentage must be shown on each invoice. Copies of proof of payment, invoices, receipts, purchase orders, timesheets with name/wage/hours, cost allocation, general ledger, warrants, etc., must be submitted as a backup for the match.

E. Non-reimbursable Expenses:

- Transfer of funds between any programs. Contracts, single vendor response to a competitive bid, sole source contracts, and any procurement documentation not pre-approved by DHSEM.
- Training and related travel costs not pre-approved by DHSEM.
- Supplanting (using federal funds to purchase items previously budgeted for with state or local funds).
- Maintenance and/or wear and tear costs of general use vehicles and emergency response apparatus.
- Equipment purchased for an exercise cannot be used for permanent installation and/or beyond the scope of an exercise.
- Weapons and ammunition.
- Entertainment and sporting events
- Personal items such as laundry, personal hygiene items, magazines, in-room movies, personal travel, and personal phone calls.
- Travel insurance, visa, and passport charges.
- Lodging costs in excess of State per diem, as appropriate.
- Lunch when travel is wholly within a single day.
- Standalone working meals.
- Bar charges, alcoholic beverages.
- Finance, late fees, or interest charges.
- Lobbying, political contributions, and legislative liaison activities.
- Organized fundraising, including salaries of persons while engaged in these activities.
- Expenditures not supported with appropriate documentation when submitted for reimbursement. Only properly documented expenditures will be processed for payment. Unsupported expenditures will be returned to the jurisdiction for resubmission.

F. Payment Conditions. The sub-recipient must certify that in requesting and accepting a sub-grant payment, they have spent those funds on eligible expenditures; that the work performed was within the scope of work allowed for specific projects; and that all records pertinent to specific projects will be retained for at least the periods required under record retention regulation requirements from the closeout of the last project. The period of record retention for grant and financial data is three years if state funds are paid.

G. Delays and Denial of Payment. Reasons for delays in FEMA processing of payment requests include, but are not limited to, the following:

- Vendor identification number is missing or incorrect;
- Disaster and project number is missing;
- Period of performance (POP) listed is incorrect;
- Service delivery dates do not agree with invoices or outside of contract period;
- Dollar amount on forms do not agree;
- Mathematical errors;
- Full address of sub-grantee is not included;
- Sub-recipient did not provide required back-up documentation; or

Reasons for NMDHSEM declining payment requests include, but are not limited to, the following:

- The POP has expired;
- The amount exceeds the remaining funding available for disbursement prior to the final financial and program compliance reviews (the hold or funding retention amount);
- Request for payment requires a state and/or budget amendment, and cannot be processed until the amendment request is received/approved;
- The reimbursement requested is for an activity outside of the approved scope of work;
- Forms are not signed by an authorized person, or are signed by only one signatory;
- Reimbursement of awarded funds have been suspended due to a non-compliance issue such as failure to submit quarterly reports; or
- Reimbursements of awarded funds have been suspended due to noncompliance activities.

Sub-recipients can reduce the likelihood of delays in processing of payment requests by checking for accuracy prior to submission.

ARTICLE 3: AUDITING AND REPORTING REQUIREMENTS

A. Quarterly Reports. In accordance with 2 C.F.R. § 200.328, the Applicant shall submit quarterly reports to the NMDHSEM beginning with the first full quarter after the signature date on the Sub-recipient Grant Agreement. The NMDHSEM will provide sub-recipient a form for this report. Quarterly reports are due no later than the 15th of the month following the end of the quarter - January 15, April 15, July 15, and October 15.

In order that NMDHSEM may adequately evaluate the progress and status of each sub-grant, quarterly reports shall contain a description of the work accomplished to date, the methods and procedures used, the anticipated completion date, a summary of all project costs to date, and other such information as may be of assistance in its evaluation of the project.

Reports shall be sent to the Department of Homeland Security & Emergency Management, Recovery Unit, P.O. Box 27111, Santa Fe, NM 87502, or electronically to DHSEM.mitigation@dhsem.nm.gov.

B. Additional Reporting Requirements. The sub-recipient must immediately report in writing to the NMDHSEM Mitigation Unit any alleged acts or allegations of fraud or misappropriation of funds for work authorized under this Sub-recipient Grant Agreement. This extends to reporting any legal action, lawsuit, bankruptcy, or other action that may jeopardize the successful completion of any authorized project. Additional reporting and financial reconciliation requirements may also be requested at NMDHSEM and FEMA's request. Failure to comply with these requests may jeopardize funding and may be a breach of this Sub-recipient Grant Agreement.

C. Enforcement. The NMDHSEM may suspend drawdowns, impose other special conditions, or take other authorized action pursuant to 2 C.F.R. § 200.339 (Remedies for Noncompliance) if the sub-recipient does not submit accurate and timely reports. This may include, among other things, the

administrative closeout of a grant and/or any projects under a grant when the sub-recipient is not responsive to reasonable efforts NMDHSEM makes to collect required reports needed to complete closeout. Administrative closeout is a unilateral mechanism by NMDHSEM to move forward with project or grant closeout using available grant information in lieu of final reports. This can require NMDHSEM to make cash or cost adjustments and ineligible cost determinations, which may result in identifying a debt owed to FEMA and/or NMDHSEM.

D. Financial Procedures. The sub-recipient agrees to maintain financial procedures and support documents and to establish and maintain a proper accounting system to record expenditures of disaster assistance funds in accordance with generally accepted accounting principles or as directed by the Governor's Authorized Representative, to account for the receipt and expenditure of funds under this Agreement. If applicable, RECIPIENT / SUBGRANTEE shall conduct audit(s) pursuant to the Single Audit Act of 1984, 31 U.S.C. § 7501 et. seq., 44 C.F.R. Part 14, 2 C.F.R. Part 200, 0MB Circular A-133, "Audits of States, Local Governments, and Non-profit Organizations," and applicable New Mexico laws, rules and regulations. Further, sub-recipient must provide a hard copy of the Single Audit Report within sixty (60) days of the close of its fiscal year. Otherwise, pursuant to 44 C.F.R. § 13.43, NMDHSEM may withhold or suspend payments under any grant award.

The sub-recipient shall retain all financial records, supporting documents, statistical records, and any other documents pertinent to this contract for a period of five years after the date of submission of the final expenditures report. However, if litigation or an audit has been initiated prior to the expiration of the three-year period, the records shall be retained until the litigation or audit findings have been resolved.

E. Authorizing Statute. This award is made under the provisions of the Robert T. Stafford Disaster Relief and Emergency Assistance Act, Pub. L. No. 93-288 (1974) (codified as amended at 42 U.S.C. §§ 5121-5207) (Stafford Act), in accordance with 44 C.F.R. § 206.44.
All scopes of work and costs approved as a result of this Sub-recipient Grant Agreement, whether as estimates or final costs approved through subawards, PWs, or otherwise, will incorporate by reference the terms of this Sub-recipient Grant Agreement and must comply with applicable laws, regulations, policy, and guidance in accordance with this Sub-recipient Grant Agreement.

Pursuant to Executive Order 13858 Strengthening Buy-American Preferences for Infrastructure Projects, FEMA encourages recipients to use, to the greatest extent practicable and consistent with the law, iron and aluminum as well as steel, cement, and other manufactured products produced in the United States in Public Assistance and HMGP eligible public infrastructure repair and construction projects affecting surface transportation, ports, water resources including sewer and drinking water, and power. Such preference must be consistent with the law, including cost and contracting requirements at 2 C.F.R. Part 200.

F. Additional Terms and Conditions. The following additional sub-grant agreement documents are fully incorporated into this Sub-recipient Grant Agreement and thereby constitute additional terms and conditions of this agreement.

- The Stafford Act, its implementing regulations contained in Title 44 of the C.F.R., and FEMA policy and guidance.
- **Hazard Mitigation Assistance Guide (March 2023)**
- The Uniform Administrative Requirements, Cost Principles, and Audit Requirements for Federal Awards set forth at 2 C.F.R. Parts 200 and 3002.
- Attachment 1 United States Department of Homeland Security (USDHS) Standard Terms and Conditions (January 24, 2022) in effect on the date of the Declaration which are incorporated by reference into this Sub-recipient Grant Agreement

- Attachment 2 Reimbursement Checklist
- Attachment 3 Glossary and Definitions
- Attachment 4 Acronyms

ARTICLE 4: SCOPE OF WORK

A. As authorized by the Robert T. Stafford Disaster Relief and Emergency Assistance Act (the Stafford Act), as amended (42 U.S.C. § 5121 et seq.), and Section 662 of the Post Katrina Emergency Reform Act of 2006, as amended (6 U.S.C. § 762), the **City of Santa Fe** has been awarded funds for the Hazard Mitigation Plan Update and Wildlife Risk Assessment Project. Funds shall be utilized as outlined in the approved budget as awarded by FEMA on **July 23,2024**. The Sub Recipient shall match the Federal Award Amount of **$124,574.82** with a local jurisdictional amount of **$38,934.25** for a total project cost of **$163,509.07**. All work performed pursuant to this agreement must comply with the approved FEMA application. All work must be completed within the performance period, between **July23,2024 – November 14,2027.** The **City of Santa Fe** shall not sub-grant any part of this award to any other entity or organization. Within the first reporting quarter, all awards require confirmation that expenditures in the budget category toward this project will be made. If not, DHSEM may execute a de-obligation of Federal funds without recourse by the **City of Santa Fe.**

B. Approved projects must commence within the first reporting quarter. If a project cannot commence and be operational within the first reporting quarter of the approved award date, the sub–Recipient must submit a written statement to DHSEM, signed by the sub-recipient signatory officials, justifying the delay in implementation, the expected starting date, and a formal request to extend the project start date past the first reporting quarter. At the sole discretion of DHSEM, the grant award is subject to cancellation, and funds may be de-obligated and reallocated to other projects.

ARTICLE 5: PUBLICATIONS

A. Publications created with funding under this grant shall prominently contain the following statement or a DHSEM pre-approved modification: **This Document was prepared under a sub-grant from the FEDERAL EMERGENCY MANAGEMENT AGENCY, and the NEW MEXICO DEPARTMENT OF HOMELAND SECURITY AND EMERGENCY MANAGEMENT. Points of view or opinions expressed in this document are those of the authors and do not necessarily represent the official position or policies of the Federal Emergency Management Agency and the New Mexico Department of Homeland Security and Emergency Management.**

ARTICLE 6: PERFORMANCE PERIODS

The performance period for this sub-grant award is **July 23,2024 – November 14,2027.** Further, all personnel-related grant activity must be completed between **July 23,2024 – November 14,2027.** Funds may not be obligated outside of these time periods. An obligation occurs when funds are encumbered, as with a purchase order and/or commitment of salaries and benefits**. All obligated and encumbered funds *must be liquidated* within 45 days of the end of the performance period when the *Final Progress and Financial Reports* are due**.

ARTICLE 7: RECOVERY OF FUNDS FOR DUPLICATION OF BENEFITS AND INELIGIBLE ACTIVITIES

A. Ineligible Activities. The FEMA and/or NMDHSEM may disallow costs and recover funds based on the results of audit or review during or after performance of the award to ensure compliance with the terms of the Sub-recipient Grant Agreement and award document. The FEMA and/or NMDHSEM is required to recover funds when the sub-recipient has ineligible underruns (for example, actual costs for a PA large project are less than the amount awarded based on initial estimates); knowingly or negligently withholds

or misrepresents material information; fails to complete work and comply with the terms of this Sub-recipient Grant Agreement or the approved award; expends federal funds in error; or incurs costs that are unreasonable or otherwise disallowed. If, after exhaustion of appeal rights, FEMA and/or NMDHSEM determines a debt is owed, the State has 30 days to resolve the amount owed before the debt is referred to the FEMA Finance Center for collection. The State may do so by directly paying FEMA. The State may also deposit the amount owed directly into the applicable subaccount in U.S. Health and Human Services (HHS)/Smartlink and notify FEMA when it has reimbursed that subaccount, after which FEMA will de-obligate that amount in the subaccount. Alternatively, the sub-recipient may request to substitute unallowable costs for other costs that are allowable (e.g., necessary, allocable, and reasonable under the same award and have not yet been reimbursed by FEMA).

B. Duplication of Benefits. In accordance with the provisions of 42 U.S.C. § 5155 (Section 312 of the Stafford Act), duplication of benefits is prohibited. The NMDHSEM must take all actions necessary and reasonable to ensure that all who receive federal assistance are aware of their responsibility to repay federal assistance that is duplicated by amounts available from insurance or any other source for the same purpose. The FEMA and/or NMDHSEM may at any time, pre-award or post-award, adjust the level of funding provided to account for financial assistance provided from any other source for the same purpose as the federal assistance or to account for benefits available for the same purpose from another source, irrespective of whether they are actually received. The sub-recipient shall notify NMDHSEM, as soon as practicable, of the existence of any insurance coverage for the costs identified in the application and of any entitlement to or recovery of funds from any other source for the project costs, including Small Business Administration funding, United States Department of Agriculture (USDA), and other Federal, State, and private funding. The amount of duplicate sources available shall reduce allowable costs. The sub-recipient shall be liable to NMDHSEM to the extent that the sub-recipient receives duplicate benefits from any other source for the same purposes for which the sub-recipient has received payment from the NMDHSEM.

C. Cooperation. The NMDHSEM agrees, on its behalf and on behalf of its political subdivisions and others that receive federal assistance, to cooperate with the Federal Government in seeking recovery of federal assistance against any party or parties whose intentional acts or omissions or whose negligence or other tortious conduct may have caused or contributed to the damage or hardship for which federal assistance was provided under this Sub-recipient Grant Agreement. If applicable, FEMA will treat recovered funds as duplicated benefits available to NMDHSEM/sub-recipient in accordance with Section 312 of the Stafford Act (codified as amended at 42 U.S.C. § 5155).

D. NMDHSEM Responsibilities. The NMDHSEM is responsible for recovering federal assistance expended in error, misrepresentation, fraud, or for costs otherwise disallowed or unused.

a. The NMDHSEM must notify FEMA of any potential debt as a result of federal funds expended in error, misrepresentation, fraud, or for costs otherwise disallowed or unused.

b. The NMDHSEM must report all cases of suspected fraud to the USDHS Office of Inspector General. The NMDHSEM must cooperate with any investigation conducted by the USDHS Office of Inspector General. The NMDHSEM must cooperate with FEMA regarding any and all lawsuits that may result from the NMDHSEM or FEMA's attempt to recover funds or disallow costs.

E. Statute of Limitations. The 3-year statute of limitations limiting FEMA's ability to initiate an administrative action to recover funds paid as provided for in Section 705(a) of the Stafford Act (codified as amended at 42 U.S.C. § 5205(a)) begins with:

a. Initiation of an Administrative Action to Recover Payment. The initiation of an administrative action to recover payment includes FEMA's written notice to the NMDHSEM or a sub-recipient of a questioned or disallowed cost or improper payment (including a request for information

concerning such cost or payment) and written notice to the NMDHSEM or a sub-recipient of a FEMA or 3rd party review or audit.

F. Refunds, Rebates, and Credits. The NMDHSEM must transfer to FEMA the appropriate share, based on the federal support percentage, of any refund, rebate, credit or other amounts arising from the performance of this Sub-recipient Grant Agreement. The NMDHSEM must take necessary action to promptly collect all monies due or which may become due and if applicable, to cooperate with the Federal Government in any claim or suit in connection with amounts due.

G. Non-Compliant Sub-recipients. As per 2 C.F.R. §§ 200.207, 200.303(d) and 200.338(A-F), NMDHSEM can selectively use any or all the following remedies and prompt actions for non-compliance with any term of an award to include audit finding(s):

- **a.** Increased monitoring of projects and require additional financial and performance reports.
- **b.** Disallow advance payment process.
- **c.** Temporarily withhold payments pending correction of the deficiency.
- **d.** Disallow or deny use of funds and matching credit for all or part of the cost of the activity or action not in compliance.
- **e.** Request FEMA to completely or partially de-obligate funding for a project.
- **f.** Temporarily withhold payments pending correction of the deficiency by the sub-recipient.
- **g.** Withhold further awards for the grant program.
- **h.** Take other programmatic or legally available remedies.

ARTICLE 8: CONSTRUCTION REQUIREMENTS

A. The NMDHSEM must ensure that all applicable federal, state, and local permits and approvals are obtained, and all permit conditions are addressed before the start of any construction activity, including FEMA and NMDHSEM/sub-recipient compliance with the National Environmental Policy Act, the National Historic Preservation Act, the Endangered Species Act, and all other applicable environmental laws and executive orders. All construction should be in accordance with approved permits, projects plans and specifications, applicable building codes, and program guidance.

ARTICLE 9: NATIONAL ENVIRONMENTAL POLICY ACT (NEPA)/ENVIRONMENTAL PLANNING AND HISTORIC PRESERVATION (EHP) COMPLIANCE

A. The sub-recipient must provide information to FEMA the legally required environmental planning and historic preservation (EHP) review and to ensure compliance with the applicable EHP laws and Executive Orders (EO). These EHP requirements include but are not limited to National Environmental Policy Act, National Historic Preservation Act, Endangered Species Act, E 11988 Floodplain Management, EO 11990 Protection of Wetlands, and EO 12898 Environmental Justice. The sub-recipient must comply with all federal, state, local, tribal, and territorial EHP requirements and obtain applicable permits and clearances.

B. Sub-recipients shall not undertake any activity from the project that would result in ground disturbance, facility modification, or relates to the use of sonar equipment without the prior approval of FEMA. These include but are not limited to communications towers, physical security enhancements involving ground disturbance, new construction, and modifications to buildings that are 50 years old or older, and exercises. The sub-recipient must comply with all mitigation or treatment measures required for the project as the result of FEMA's EHP review. An EHP Screening Form does not need to be provided for those exercises that are planned to take place at previously approved facilities, such as, fire and police academies, search and rescue training facilities, and explosive testing centers. Any type of exercise that requires any type of land, water, or vegetation disturbance or building of temporary structures must undergo an EHP review.

C. Any change to an approved project description will require re-evaluation for compliance with EHP requirements before the project can proceed. If ground disturbing activities occur during project implementation, the sub-recipient must ensure monitoring of ground disturbance and if any potential archeological resources are discovered, the sub-recipient will immediately cease construction in that area and notify NMDHSEM, FEMA and the New Mexico Historic Preservation Division. Initiation of these activities prior to completion of FEMA's EHP review will result in a non-compliance finding and may result in ineligibility of grant funding.

ARTICLE 10: PROPERTY AND EQUIPMENT MANAGEMENT

A. The sub-recipient will follow the property standards articulated in 2 C.F.R. § 200.310 through 2 CFR 200.326. The sub-recipient shall, when practical, prominently display the following on any equipment purchased with award funds: **PURCHASED WITH FUNDS PROVIDED BY THE FEDERAL EMERGENCY MANAGEMENT AGENCY.** No equipment purchased with these grant funds may be assigned to other entities or organizations without the expressed approval in writing from DHSEM prior to the jurisdiction's encumbrance or expenditure for that equipment.

B. The subrecipient will follow the property standards articulated in 2 C.F.R. § 200.310 through 2 C.F.R. § 200.326. The subrecipient shall maintain an effective property management system; safeguards to prevent loss, damage or theft; maintenance procedures to keep equipment in good condition; and disposition procedures. A Property Inventory Report shall be submitted to NMDHSEM annually each January 30 with the Financial Progress Report during the performance period, and continued submission is required annually until final disposition of the equipment. The subrecipient shall, when practical, prominently display the following on any equipment purchased with award funds: Purchased with funds provided by the U.S. Department of Homeland Security. No equipment purchased with these grant funds may be assigned to other entities or organizations without the expressed approval in writing from NMDHSEM, prior to the jurisdiction's encumbrance or expenditure for that equipment.

C. Any disposition of property or equipment must be in accordance with 2 C.F.R. § 200.313(e) and pre-approved by FEMA through NMDHSEM.

ARTICLE 11: SUBRECIPIENT MONITORING POLICY

A. In accordance with 2 C.F.R. § 200.328, NMDHSEM may periodically monitor a sub-recipient's projects to ensure that program goals, objectives, timelines, budgets, and other related program criteria are being met. The NMDHSEM reserves the right to periodically review and conduct analysis of the sub-recipient's financial, programmatic, and administrative policies and procedures. This monitoring may include review of accounting for receipts and expenditures, cash management, maintaining adequate financial records, means of allocating and tracking costs, contracting, procurement, records management, payroll, means of allocating staff costs, property and equipment management system, progress of project activities, etc. This may include unscheduled desk audits and field inspections. The sub-recipient shall accommodate all such requests within reason. If the sub-recipient encounters any unanticipated problem with the Scope of Work, allowed costs, procurement, permitting, or other difficulty, the sub-recipient must communicate that problem to NMDHSEM promptly. Work on affected projects must be suspended until the problem is resolved. Technical assistance is available from NMDHSEM staff.

B. The sub-recipient will immediately, no later than 24-hours upon notice, report to NMDHSEM allegations of wrong-doing on the part of any contractor, sub-contractor, agent or employee of the sub-recipient, or other interested party in reference to the work authorized under this Sub-recipient Grant Agreement. This extends to any legal action, lawsuit, bankruptcy, or other action that may jeopardize the successful completion of any authorized project.

ARTICLE 12: PROCUREMENT

A. Procurement shall comply with all federal, state, and local procurement requirements including 2 C.F.R. § 200.320 and the New Mexico Procurement Code for expenditure of funds under this Agreement. The Applicant must conform to applicable state and federal law and the Procurement Standards Sections 2 C.F.R. § 200.317-326, and Appendix II. Contractors that develop or draft specifications, requirements, Statements of Work, and/or Requests for Proposals (RFP) for a proposed procurement shall be excluded from bidding or submitting a proposal to compete for the award of such procurement. Local bidder's preference is not allowed for federally funded procurements. Procurement transactions shall be conducted to provide maximum open and free competition.

B. When procuring property and services under this agreement, the sub-recipient will follow 2 C.F.R. § 200.318 through 2 C.F.R. § 200.326 and Appendix II. The sub-recipient must use its own documented procurement procedures which reflect applicable state, local, tribal, and territorial laws, and regulations, provided that the procurements conform to applicable federal law and the standards identified in 2 C.F.R. § 200. As such, the sub-recipient must use one of the methods of procurement identified in 2 C.F.R. § 200.320.

C. Also, per 2 C.F.R. § 200.318(i), subrecipients are required to maintain and retain records sufficient to detail the history of procurement covering at least the rationale for the procurement method, selection of contract type, contractor selection or rejection, and the basis for the contract price. States and territories are encouraged to maintain and retain this information as well and are reminded that in order for any cost to be allowable, it must be adequately documented per 2 C.F.R. § 200.403(g). Examples of the types of documents that would cover this information include but are not limited to:

- **a.** Solicitation documentation, such as requests for quotes, invitations for bids, or requests for proposals;
- **b.** Responses to solicitations, such as quotes, bids, or proposals;
- **c.** Pre-solicitation independent cost estimates and post-solicitation cost/price analyses on file for review by federal personnel, if applicable;
- **d.** Contract documents and amendments, including required contract provisions; and
- **e.** Other documents required by federal regulations applicable at the time a subgrant is awarded to a subrecipient.

D. Procurement from Minority Owned and Women Owned Business is encouraged and must be tracked and reported to NMDHSEM on the quarterly reports. Procurement transactions shall be conducted to provide maximum open and free competition. Each sole–source procurement single vendor response to a competitive bid, and all purchases require prior approval of NMDHSEM.

E. The sub-recipient will follow the property standards articulated in 2 C.F.R. § 200.310 through 2 C.F.R. § 200.326. The sub-recipient shall maintain an effective property management system; safeguards to prevent loss, damage or theft; maintenance procedures to keep equipment in good condition; and disposition procedures. Property and equipment records shall be maintained for a period of three years following the final disposition, replacement or transfer of the property and equipment.

ARTICLE 13: CONTRACTS

A. Contractors that develop or draft specifications, requirements, Statements of Work, and/or Requests for Proposals (RFP) for a proposed procurement shall be excluded from bidding or submitting a proposal to compete for the award of such procurement. Local bidder's preference is not allowed for federally funded procurements. Procurement transactions shall be conducted to provide maximum open and free

competition. Each sole–source procurement, single vendor response to a competitive bid, and all purchases require prior approval of DHSEM.

B. Any contract shall comply with the requirements of Procurement Standards Sections of 28 C.F.R. Parts 66 and 70, 2 C.F.R. Part 200 and OMB Circulars A–102 "Uniform Administrative Requirements for Grants and Cooperative Agreements with State and Local Governments" for expenditure of Federal funds under this Sub-recipient Grant Agreement. Applicants shall submit procurement and contracts to NMDHSEM for review prior to approval. Contracts for professional services must meet applicable local, state, and federal requirements. All contractors must be licensed in New Mexico for the type of work that is required. Prior to any contracted work beginning, the sub-recipient shall provide NMDHSEM with a copy of the contractor's license. Contract work must not exceed the scope of work and PW awarded amount prescribed by FEMA, unless requested through a scope of work change and approval from FEMA.

C. Any contract entered during this sub-grant period shall comply with local, State, and Federal government contracting regulations. Professional and consultant services contracts must include local, State, and Federal government-required contract language, a project budget, SOW, and a pay schedule. ***All contracts require pre-approval by DHSEM prior to execution.*** Contract deliverables must meet the intent of the grant application and grant requirements. Justification is required for compensation for individual consultant services, which must be reasonable and consistent with the amount paid for similar services in the marketplace. Detailed invoices and time and effort reports are required for consultants.

ARTICLE 14: COMPETITION AND CONFLICTS OF INTEREST

A. Among the requirements of 2 C.F.R. § 200.319(b) applicable to all non-federal entities other than states, in order to ensure objective contractor performance and eliminate unfair competitive advantage, contractors that develop or draft specifications, requirements, statements of work, or invitations for bids or requests for proposals must be excluded from competing for such procurements. The FEMA considers these actions to be an organizational conflict of interest and interprets this restriction as applying to contractors that help a subrecipient develop its grant application, project plans or project budget. This prohibition also applies to the use of former employees to manage the grant or carry out a contract when those former employees worked on such activities while they were employees of the non-federal entity.

B. Under this prohibition, unless the subrecipient solicits for and awards a contract covering both development and execution of specifications (or similar elements as described above), and this contract was procured in compliance with 2 C.F.R. §§ 200.317 – 200.327, federal funds cannot be used to pay a contractor to carry out the work if that contractor also worked on the development of those specifications. This rule applies to all contracts funded with federal grant funds, including pre-award costs, such as grant writer fees, as well as post-award costs, such as grant management fees. Additionally, some of the situations considered to be restrictive of competition include, but are not limited to:

- **a.** Placing unreasonable requirements on firms for them to qualify to do business;
- **b.** Requiring unnecessary experience and excessive bonding;
- **c.** Noncompetitive pricing practices between firms or between affiliated companies;
- **d.** Noncompetitive contracts to consultants that are on retainer contracts;
- **e.** Organizational conflicts of interest;
- **f.** Specifying only a "brand name" product instead of allowing "an equal" product to be offered and describing the performance or other relevant requirements of the procurement; and
- **g.** Any arbitrary action in the procurement process.

C. Per 2 C.F.R. § 200.319(c), the subrecipient must conduct procurements in a manner that prohibits the use of statutorily or administratively imposed state, local, tribal, or territorial geographical preferences in the evaluation of bids or proposals, except in those cases where applicable federal statutes expressly mandate or encourage geographic preference. Nothing in this section preempts state licensing laws. **When**

contracting for architectural and engineering services, geographic location may be a selection criterion, provided its application leaves an appropriate number of qualified firms, given the nature and size of the project, to compete for the contract.

D. Under 2 C.F.R. § 200.318(c)(1), the subrecipient is required to maintain written standards of conduct covering conflicts of interest and governing the actions of their employees engaged in the selection, award, and administration of contracts. **No employee, officer, or agent may participate in the selection, award, or administration of a contract supported by a federal award if he or she has a real or apparent conflict of interest.** Such conflicts of interest would arise when the employee, officer or agent, any member of his or her immediate family, his or her partner, or an organization that employs or is about to employ any of the parties indicated herein, has a financial or other interest in or a tangible personal benefit from a firm considered for a contract. The non-federal entity's officers, employees, and agents may neither solicit nor accept gratuities, favors, or anything of monetary value from contractors or parties to subcontracts. However, subrecipient entities may set standards for situations in which the financial interest is not substantial, or the gift is an unsolicited item of nominal value. The standards of conduct must provide for disciplinary actions to be applied for violations of such standards by officers, employees, or agents of the non-federal entity.

E. Under 2 C.F.R. § 200.318(c)(2), if the subrecipient has a parent, affiliate, or subsidiary organization that is not a state, local, tribal or territorial government, the subrecipient must also maintain written standards of conduct covering organizational conflicts of interest. In this context, organizational conflict of interest means that because of a relationship with a parent company, affiliate, or subsidiary organization, the subrecipient is unable or appears to be unable to be impartial in conducting a procurement action involving a related organization. The non-federal entity must disclose in writing any potential conflicts of interest to FEMA or NMDHSEM in accordance with applicable FEMA policy.

ARTICLE 15: CONTRACTS

A. Contracts for professional and consultant services executed during this grant period must include federal, state, local, tribal, and territorial government required contract language, a project budget, and require pre-approval by NMDHSEM prior to implementation. Contract deliverables must meet the intent of the grant application and grant requirements. Justification is required for compensation for individual consultant services, which must be reasonable and consistent with the amount paid for similar services in the marketplace. Detailed invoices and time and effort reports are required for consultants. *See* 2 C.F.R. § 200.1, 2 C.F.R. § 200 Appendix II to Part 200.

ARTICLE 16: AUDIT REQUIREMENTS

A. As a federal grant recipient, the State of New Mexico requires a sub-recipient expending $750,000 or more in federal funds in the organization's fiscal year to conduct an organization–wide audit in accordance with the Single Audit described in 2 C.F.R. § 200.501. The sub-recipient will permit state or federal officials and auditors to have access to sub-recipient and contractor records and financial statements as necessary for the state to comply with 2 C.F.R. § 200.501. Copies of audit findings must be submitted to NMDHSEM within 30 days after the sub-recipient receives its audit report, or within a 9-month period of the grant closeout date, whichever is earlier. Include the federal agency name, program, grant number, the CFDA title and number, and the name of the pass-through agency (NMDHSEM) in all documents.

ARTICLE 17: RECORDS RETENTION

A. Records Retention.

a. **State Requirement.** The State must retain records for three years after all projects are complete and the federal disaster is formally closed out, except in certain rare circumstances described in 2 C.F.R. § 200.334 (Retention requirements for records), from the date it submits the final Federal Financial Report (SF-425) to FEMA in compliance with 2 C.F.R. § 200.334. If FEMA administratively closes the grant where no final SF-425 was submitted, FEMA uses the date the grant was administratively closed as the start date for the three-year record retention period.

b. **Sub-recipient Requirement.** The sub-recipients must retain project or subaward records for at least three years from the date that the NMDHSEM submits to FEMA the final expenditure report for a project or subaward. If, however, there is any litigation, claim, negotiation, audit, request for information, or other action involving the project or subaward that starts before that date, the records must be retained until completion of the action and resolution of all issues which arise from it, or until the end of the three-year period, whichever is later.

c. The sub-recipient will follow the record retention and access standards articulated in 2 C.F.R. § 200.333 through 2 C.F.R. § 200.337. The grant financial and administrative records shall be maintained for a period of three years following the date of the closure of the grant award, or audit if required. Time and effort, personnel and payroll records for all individuals reimbursed under the award must be maintained. Property and equipment records shall be maintained for a period of three years following the final disposition, replacement or transfer of the property and equipment.

d. The sub-recipient will be required to maintain project records until the expiration of the appropriate retention period. This includes records related to Management Costs, procurement, contracting, accounts payable, engineering, inventory, force account (materials, labor, and equipment), insurance settlements or other records related to the project scope of work. Retention procedures are outlined in the Hazard Mitigation Assistance Grant Programs Administrative Plan.

ARTICLE 18: CHANGES TO AWARD

A. All change requests must be submitted either in writing or electronically to the NMDHSEM contact for review 90 days prior to the termination of this Sub-recipient Grant Agreement. All change requests must be accompanied by a justification narrative and a budget and spending plan. All change requests must be consistent with the scope of the project and grant guidelines. Change requests will be considered only if reporting requirements are current, and all other terms and conditions of this Sub-recipient Grant Agreement have otherwise been met at the time of the request. If approved by NMDHSEM and FEMA, changes in the programmatic activities, purpose of the project, key personnel specified on the grant award, contractual services for activities central to the purposes of the award, change in project site, or release of special conditions, will result in an amendment to this award. Requests for changes must be formally submitted to NMDHSEM and FEMA.

B. Changes to this Sub-recipient Grant Agreement will be made via a Sub-recipient Grant Agreement Amendment. The NMDHSEM will prepare each Amendment when needed. No Sub-recipient Grant Agreement Amendment is valid until fully executed.

ARTICLE 19: REMEDIES FOR NONCOMPLIANCE

A. For the reasons listed below, special conditions may be imposed, reimbursements may be partially or wholly withheld, the award may be wholly or partly suspended or terminated, or future awards, reimbursements and award modifications may be withheld. The NMDHSEM may institute the following, but is not limited to, withholding authority to proceed to the next phase of a project, requiring additional or more detailed

financial reports, additional project monitoring, and/or establish additional prior approvals. The NMDHSEM shall notify the sub-recipient of its decision in writing stating the nature and the reason for imposing the conditions/restrictions, the corrective action required and timeline to remove them, and the method of requesting reconsideration of the imposed conditions/restrictions. The sub-recipient must respond within five days of receipt of notification.

a. Unwillingness or inability to attain project goals or scope of work.
b. Unwillingness or inability to adhere to Special Conditions of this Sub-recipient Grant Agreement.
c. Failure or inability to adhere to grant guidelines and federal compliance requirements.
d. Improper procedures regarding contracts and procurements.
e. Failure to submit reliable and/or timely reports.
f. Fiscal management which does not meet reasonable professional standards.
g. Failure or inability to adhere to the terms and conditions of this Sub-recipient Grant Agreement.
h. Unwillingness or inability to obtain permits required by law to perform the eligible work.
i. Noncompliance with any and all federal, state, local and tribal grant requirements.

B. The NMDHSEM shall notify the sub-recipient of any non-compliance issues in writing and shall attempt to arrive at a resolution in a timely and reasonable fashion. If corrective action is required, NMDHSEM and the sub-recipient shall determine a timeline and landmarks for remediation. The NMDHSEM may require additional detailed financial reports or additional project monitoring. The ultimate penalty for non-compliance with the terms and conditions of this Sub-recipient Grant Agreement is for payments to be withheld or for the award to be suspended or terminated. The sub-recipient agrees to make restitution if necessary.

C. The NMDHSEM may take action as it determines appropriate under the circumstances including but not limited to withholding of payments, disallowance of costs, suspension or termination of the award if the sub-recipient fails to comply with applicable Federal and State statutes, regulations, or the terms of this Sub-recipient Grant Agreement pursuant to 2 C.F.R. § 200.339.

D. Nothing in this section abrogates the sub-recipient's right of appeal.

ARTICLE 20: TERMINATION

A. **For Cause:** In compliance with 2 C.F.R. § Part 200.340(a)(1), if performance is not occurring as agreed, the award may be reduced or terminated without compensation for reduction or termination costs. The NMDHSEM will provide notice of five days to the subrecipient stating the reasons for the action, steps taken to correct the problems, and the commencement date of the reduction or termination. The NMDHSEM will reimburse the subrecipient only for acceptable work or deliverables, necessary and allowable costs incurred through the date of reduction or termination. Final payment may be withheld at the discretion of NMDHSEM until completion of a final NMDHSEM review. Disposition of any equipment acquired under a terminated grant must be in accordance with 2 C.F.R. § 200.313(e).

B. **For Convenience:** In compliance with 2 CFR Part 200.340(a)(4), this Agreement may be terminated without cause by the subrecipient upon written notice setting forth the reasons for such termination, and the effective date at least 30 days prior to the intended date of termination. A termination pursuant to this provision does not nullify a party's obligations for performance, or liabilities for failure to perform already incurred prior to the date of termination. Any project may be terminated upon convenience, in whole or in part, for the convenience of the subrecipient; though a partial termination notification must specify that portion of the project which is to be terminated. Allowable costs obligated and/or incurred through the date of termination shall be reimbursed. Disposition of any equipment acquired under a terminated grant must be in accordance with 2 C.F.R. § 200.313(e).

ARTICLE 21: CLOSEOUT OF SUB-GRANT

A. Closeout of Projects. Per 2 C.F.R. § 200.344, sub-recipients must submit all cost and supporting documentation for completed projects. The NMDHSEM will review and verify all costs and supporting documents to validate compliance. Failure to comply will result in de-obligation of the project. The NMDHSEM will close each sub-recipient file once it has conducted full review and approval of all supporting documents for compliance and all projects are completed and has project activity closed out.

a. Management Costs. Management Costs will be used for internal staff salaries, contractor payments and other support costs associated with this grant. This will be in accordance with all laws, rules, and FEMA regulations. Management Costs will be processed in accordance with the Hazard Mitigation Assistance Program and Policy Guide.

The NMDHSEM commits to closeout of all grants regardless of the availability of management costs.

ARTICLE 22: SPECIAL CONDITIONS

A. The terms of this Sub-recipient Grant Agreement are contingent upon sufficient appropriations and authorizations being made by the USDHS FEMA under the Robert T. Stafford Disaster Relief and Emergency Assistance Act U.S.C. §§ 5121-5207. If sufficient appropriations and authorizations are not made by FEMA this Sub-recipient Grant Agreement shall terminate immediately upon written notice being given by NMDHSEM to the sub-recipient. The decision of NMDHSEM shall be final.

B. If NMDHSEM proposes an Amendment to the Sub-recipient Grant Agreement to unilaterally reduce funding, the sub-recipient shall have the option to terminate the Sub-recipient Grant Agreement or agree to the reduced funding within 30 days of receipt of the proposed Amendment.

C. Each party shall be solely responsible for fiscal or other sanctions occasioned because of its own violation of requirements applicable to the performance of this Sub-recipient Grant Agreement. Each party shall be liable for its own actions or inactions in accordance with state law and nothing herein shall be deemed a waiver, indemnity or to otherwise create or effect liabilities between the parties.

D. The grant award amount is a funding allocation and is not to be interpreted as expenditure authorizations or approvals.

E. All awarded projects must be planned for, conducted, budgeted, and expended within the designated performance period.

F. Quarterly financial and progress reports are due on October 15, January 15, April 15, and July 15, within the POP. Final reports are due 15 days after the end of POP.

G. All revision requests must be reviewed and approved by NMDHSEM staff. All requests must meet the original scope of the project which may result in a sub-recipient grant amendment.

H. A revision of a project's SOW must be pre-approved by NMDHSEM staff before the jurisdiction can proceed with the request for approval process. If the revision is approved, NMDHSEM staff may request additional documentation to proceed with recommendation to NMDHSEM Leadership for final approval.

I. The beneficiary of this award is solely responsible for all expenditures that are incurred outside of the award performance period. All expenditures that are incurred above and beyond the amount of this Sub-recipient Grant Agreement are the sole responsibility of the sub-recipient of this award.

J. Procurement from Minority Owned and Women Owned Business is encouraged and must be tracked and reported to NMDHSEM on the quarterly reports.

K. Upon completion of all awarded projects, any remaining funds will be de-obligated and reverted to NMDHSEM for return to FEMA.

L. Extensions due to exigent or emergency circumstances will be determined by NMDHSEM on a case-by-case basis.

State of New Mexico
Department of Homeland Security & Emergency Management
P.O. Box 27111
Santa Fe, NM 87502

The acceptance of a subgrant from the United States and the State of New Mexico creates a legal duty and obligation on the part of the sub-recipient to use the funds or property made available in accordance with the conditions of the grant as administered by and through the New Mexico Department of Homeland Security and Emergency Management. By signing this obligating award document, the sub-recipient certifies it has read, understood, and accepted these documents as binding.

SUB-RECIPIENT GRANT AGREEMENT
Signatures of Acceptance

SUB-GRANT NO:	**DR-4652-0011-NM**		
JURISDICTION GRANT PROGRAM MANAGER PRINTED NAME:			
OFFICIAL SIGNATURE:		**DATE:**	
CONTACT NUMBER:		**E-MAIL ADDRESS:**	
JURISDICTION CHIEF FINANCIAL OFFICER PRINTED NAME:			
OFFICIAL SIGNATURE:		**Date:**	
CONTACT NUMBER:		**E-MAIL ADDRESS:**	
JURISDICTION SIGNATORY OFFICIAL PRINTED NAME:			
OFFICIAL SIGNATURE:		**DATE:**	
CONTACT NUMBER:		**E-MAIL ADDRESS:**	
NMDHSEM MITIGATION PROGRAM BUREAU CHIEF PRINTED NAME:			
NMDHSEM MITIGATION PROGRAM BUREAU CHIEF OFFICIAL SIGNATURE / DATE:			
NMDHSEM GRANTS MANAGEMENT BUREAU CHIEF PRINTED NAME:			
NMDHSEM GRANTS MANAGEMENT BUREAU CHIEF OFFICIAL SIGNATURE / DATE:			
NMDHSEM DEPUTY CABINET SECRETARY OFFICIAL PRINTED NAME:			
NMDHSEM DEPUTY CABINET SECRETARY OFFICIAL SIGNATURE / DATE:			

Print one original agreement, sign and email to: DHSEM.MITIGATION@DHSEM.nm.gov

CITY OF SANTA FE:

_____
ALAN WEBBER, MAYOR

DATE:_____

ATTEST:

_____
CITY CLERK

CITY ATTORNEY'S OFFICE:

_____
ASSISTANT CITY ATTORNEY

APPROVED FOR FINANCES:

Emily K. Oster 11/01/2024
_____
FINANCE DIRECTOR

The page is intentionally left blank.

ATTACHMENT 1
USDHS Standard Terms and Conditions
(January 24, 2022)

The Fiscal Year (FY) 2022 USDHS Standard Terms and Conditions apply to all new federal financial assistance awards funded in FY 2022. These terms and conditions flow down to sub-recipients unless an award term or condition specifically indicates otherwise. The United States has the right to seek judicial enforcement of these obligations.

All legislation and digital resources are referenced with no digital links. The FY 2022 USDHS Standard Terms and Conditions will be housed on dhs.gov at www.dhs.gov/publication/fy15-dhs- standard-terms-and-conditions.

A. Assurances, Administrative Requirements, Cost Principles, Representations and Certifications

I. USDHS financial assistance recipients must complete either the Office of Management and Budget (OMB) Standard Form 424B Assurances – Non-Construction Programs, or OMB Standard Form 424D Assurances – Construction Programs, as applicable. Certain assurances in these documents may not be applicable to your program, and the USDHS financial assistance office (USDHS FAO) may require applicants to certify additional assurances. Applicants are required to fill out the assurances as instructed by the awarding agency.

II. USDHS financial assistance recipients are required to follow the applicable provisions of the Uniform Administrative Requirements, Cost Principles, and Audit Requirements for Federal Awards located at Title 2, Code of Federal Regulations (C.F.R.) Part 200 and adopted by USDHS at 2 C.F.R. Part 3002.

III. By accepting this Agreement, recipients, and their executives, as defined in 2 C.F.R. § 170.315, certify that their policies are in accordance with OMB's guidance located at 2 C.F.R. Part 200, all applicable federal laws, and relevant Executive guidance.

B. General Acknowledgements and Assurances

All recipients, sub-recipients, successors, transferees, and assignees must acknowledge and agree to comply with applicable provisions governing USDHS access to records, accounts, documents, information, facilities, and staff.

I. Recipients must cooperate with any USDHS compliance reviews or compliance investigations conducted by USDHS.

II. Recipients must give USDHS access to examine and copy records, accounts, and other documents and sources of information related to the federal financial assistance award and permit access to facilities or personnel.

III. Recipients must submit timely, complete, and accurate reports to the appropriate USDHS officials and maintain appropriate backup documentation to support the reports.

IV. Recipients must comply with all other special reporting, data collection, and evaluation requirements, as prescribed by law, or detailed in program guidance.

V. Recipients (as defined in 2 C.F.R. Part 200 and including recipients acting as pass-through entities) of federal financial assistance from USDHS or one of its awarding component agencies must complete the USDHS Civil Rights Evaluation Tool within thirty (30) days of receipt of the Notice of Award for the first award under which this term applies. Recipients of multiple awards of USDHS financial assistance should only submit one completed tool for their organization, not per award. After the initial submission, recipients are required to complete the tool once every two (2) years if they have an active award, not every time an award is made. Recipients should submit the completed tool, including supporting materials, to CivilRightsEvaluation@hq.dhs.gov. This tool clarifies the civil rights obligations and related reporting requirements contained in the USDHS

Standard Terms and Conditions. Sub-recipients are not required to complete and submit this tool to USDHS. The evaluation tool can be found at https://www.dhs.gov/publication/dhs- civil-rights-evaluation-tool.

The USDHS Office for Civil Rights and Civil Liberties will consider, in its discretion, granting an extension if the recipient identifies steps and a timeline for completing the tool. Recipients should request extensions by emailing the request to CivilRightsEvaluation@hq.dhs.gov prior to expiration of the 30-day deadline.

C. Standard Terms & Conditions

I. Acknowledgement of Federal Funding from USDHS

Recipients must acknowledge their use of federal funding when issuing statements, press releases, requests for proposal, bid invitations, and other documents describing projects or programs funded in whole or in part with federal funds.

II. Activities Conducted Abroad

Recipients must ensure that project activities performed outside the United States are coordinated as necessary with appropriate government authorities and that appropriate licenses, permits, or approvals are obtained.

III. Age Discrimination Act of 1975

Recipients must comply with the requirements of the Age Discrimination Act of 1975, Public Law 94-135 (1975) (codified as amended at Title 42, U.S. Code, § 6101 et seq.), which prohibits discrimination on the basis of age in any program or activity receiving federal financial assistance.

IV. Americans with Disabilities Act of 1990

Recipients must comply with the requirements of Titles I, II, and III of the Americans with Disabilities Act, Pub. L. 101-336 (1990) (codified as amended at 42 U.S.C. §§ 12101– 12213), which prohibits recipients from discriminating on the basis of disability in the operation of public entities, public and private transportation systems, places of public accommodation, and certain testing entities.

V. Best Practices for Collection and Use of Personally Identifiable Information

Recipients who collect personally identifiable information (PII) are required to have a publicly available privacy policy that describes standards on the usage and maintenance of the PII they collect. USDHS defines PII as any information that permits the identity of an individual to be directly or indirectly inferred, including any information that is linked or linkable to that individual. Recipients may also find the USDHS Privacy Impact Assessments: Privacy Guidance and Privacy Template as useful resources respectively.

VI. Civil Rights Act of 1964 – Title VI

Recipients must comply with the requirements of Title VI of the Civil Rights Act of 1964 (codified as amended at 42 U.S.C. § 2000d et seq.), which provides that no person in the United States will, on the grounds of race, color, or national origin, be excluded from participation in, be denied the benefits of, or be subjected to discrimination under any program or activity receiving federal financial assistance. USDHS implementing regulations for the Act are found at 6 C.F.R. Part 21 and 44 C.F.R. Part 7.

VII. Civil Rights Act of 1968

Recipients must comply with Title VIII of the Civil Rights Act of 1968, Pub. L. 90-284, as amended through Pub. L. 113-4, which prohibits recipients from discriminating in the sale, rental, financing, and advertising of dwellings, or in the provision of services in connection therewith, on the basis of race, color, national origin, religion, disability, familial status, and sex (see 42 U.S.C. § 3601 et seq.), as implemented by the U.S. Department of Housing and Urban Development at 24 C.F.R. Part 100. The prohibition on disability discrimination includes the requirement that new multifamily housing with four or more dwelling units—i.e., the public and common use areas and individual apartment units (all units in buildings with elevators and ground-floor units in buildings without elevators)—be designed and constructed with certain accessible features. (See 24 C.F.R. Part 100, Subpart D.)

VIII. Copyright

Recipients must affix the applicable copyright notices of 17 U.S.C. §§ 401 or 402 and an acknowledgement of U.S. Government sponsorship (including the award number) to any work first produced under federal financial assistance awards.

IX. Debarment and Suspension

Recipients are subject to the non-procurement debarment and suspension regulations implementing Executive Orders (E.O.) 12549 and 12689, which are at 2 C.F.R. Part 180 as adopted by USDHS at 2 C.F.R. Part 3002. These regulations restrict federal financial assistance awards, subawards, and contracts with certain parties that are debarred, suspended, or otherwise excluded from or ineligible for participation in federal assistance programs or activities.

X. Drug-Free Workplace Regulations

Recipients must comply with drug-free workplace requirements in Subpart B (or Subpart C, if the recipient is an individual) of 2 C.F.R. Part 3001, which adopts the Government-wide implementation (2 C.F.R. Part 182) of Sec. 5152-5158 of the Drug-Free Workplace Act of 1988 (41 U.S.C. §§ 8101-8106).

XI. Duplication of Benefits

Any cost allocable to a particular federal financial assistance award provided for in 2 C.F.R. Part 200, Subpart E may not be charged to other federal financial assistance awards to overcome fund deficiencies; to avoid restrictions imposed by federal statutes, regulations, or federal financial assistance award terms and conditions; or for other reasons. However, these prohibitions would not preclude recipients from shifting costs that are allowable under two or more awards in accordance with existing federal statutes, regulations, or the federal financial assistance award terms and conditions may not be charged to other federal financial assistance awards to overcome fund deficiencies; to avoid restrictions imposed by federal statutes, regulations, or federal financial assistance award terms and conditions; or for other reasons.

XII. Education Amendments of 1972 (Equal Opportunity in Education Act) – Title IX

Recipients must comply with the requirements of Title IX of the Education Amendments of 1972, Pub. L. 92-318 (1972) (codified as amended at 20 U.S.C. § 1681 et seq.), which provide that no person in the United States will, on the basis of sex, be excluded from participation in, be denied the benefits of, or be subjected to discrimination under any educational program or activity receiving federal financial assistance. USDHS implementing regulations are codified at 6 C.F.R. Part 17 and 44 C.F.R. Part 19.

XIII. Energy Policy and Conservation Act

Recipients must comply with the requirements of the Energy Policy and Conservation Act, Pub. L. 94- 163 (1975) (codified as amended at 42 U.S.C. § 6201 et seq.), which contain policies relating to energy efficiency that are defined in the state energy conservation plan issued in compliance with this Act.

XIV. Ensuring the Future is Made in All of America by All of America's Workers

Recipients must comply with the "Build America, Buy America" provisions of the Infrastructure Investment and Jobs Act and E.O. 14005 which provide that, as appropriate and to the extent consistent with law, the recipient must use all practicable means within their authority under a federal award to provide a preference for the purchase, acquisition, or use of goods, products, or materials produced in the United States (including but not limited to iron, aluminum, steel, cement, and other manufactured products.)

XV. False Claims Act and Program Fraud Civil Remedies

Recipients must comply with the requirements of the False Claims Act, 31 U.S.C. §§3729- 3733, which prohibit the submission of false or fraudulent claims for payment to the Federal Government. (See 31 U.S.C. §§ 3801-3812, which details the administrative remedies for false claims and statements made.)

XVI. Federal Debt Status

All recipients are required to be non-delinquent in their repayment of any federal debt. Examples of relevant debt include delinquent payroll and other taxes, audit disallowances, and benefit overpayments. (See OMB Circular A-129.)

XVII. Federal Leadership on Reducing Text Messaging while Driving

Recipients are encouraged to adopt and enforce policies that ban text messaging while driving as described in E.O. 13513, including conducting initiatives described in Section 3(a) of the Order when on official government business or when performing any work for or on behalf of the Federal Government.

XVIII. Fly America Act of 1974

Recipients must comply with Preference for U.S. Flag Air Carriers (air carriers holding certificates under 49 U.S.C.) for international air transportation of people and property to the extent that such service is available, in accordance with the International Air Transportation Fair Competitive Practices Act of 1974, 49 U.S.C. § 40118, and the interpretative guidelines issued by the Comptroller General of the United States in the March 31, 1981, amendment to Comptroller General Decision B-138942.

XIX. Hotel and Motel Fire Safety Act of 1990

Recipients must ensure that all conference, meeting, convention, or training space funded in whole or in part with federal funds complies with the fire prevention and control guidelines of Section 6 of the Hotel and Motel Fire Safety Act of 1990, 15 U.S.C. § 2225a.

XX. John S. McCain National Defense Authorization Act of Fiscal Year 2019

Recipients, sub-recipients, and their contractors and subcontractors are subject to the prohibitions described in section 889 of the John S. McCain National Defense Authorization Act for Fiscal Year 2019, Pub. L. No. 115-232 (2018) and 2 C.F.R. §§ 200.216, 200.327, 200.471, and Appendix II to 2 C.F.R. Part 200. Beginning August 13, 2020, the statute – as it applies to USDHS recipients, sub-recipients, and their contractors and subcontractors – prohibits obligating or expending federal award funds on certain telecommunications and video surveillance products

and contracting with certain entities for national security reasons.

XXI. Limited English Proficiency (Civil Rights Act of 1964, Title VI)

Recipients must comply with Title VI of the Civil Rights Act of 1964, (42 U.S.C. § 2000d et seq.) prohibition against discrimination on the basis of national origin, which requires that recipients of federal financial assistance take reasonable steps to provide meaningful access to persons with limited English proficiency (LEP) to their programs and services. For additional assistance and information regarding language access obligations, please refer to the USDHS Recipient Guidance: https://www.dhs.gov/guidance- published-help- department- supported-organizations-provide-meaningful-access-people-limited and additional resources on http://www.lep.gov.

XXII. Lobbying Prohibitions

Recipients must comply with 31 U.S.C. § 1352, which provides that none of the funds provided under a federal financial assistance award may be expended by the recipient to pay any person to influence, or attempt to influence an officer or employee of any agency, a Member of Congress, an officer or employee of Congress, or an employee of a Member of Congress in connection with any federal action related to a federal award or contract, including any extension, continuation, renewal, amendment, or modification.

XXIII. National Environmental Policy Act

Recipients must comply with the requirements of the National Environmental Policy Act of 1969, (NEPA) Pub. L. 91-190 (1970) (codified as amended at 42 U.S.C. § 4321 et seq. and the Council on Environmental Quality (CEQ) Regulations for Implementing the Procedural Provisions of NEPA, which require recipients to use all practicable means within their authority, and consistent with other essential considerations of national policy, to create and maintain conditions under which people and nature can exist in productive harmony and fulfill the social, economic, and other needs of present and future generations of Americans.

XXIV. Nondiscrimination in Matters Pertaining to Faith-Based Organizations

It is USDHS policy to ensure the equal treatment of faith-based organizations in social service programs administered or supported by USDHS or its component agencies, enabling those organizations to participate in providing important social services to beneficiaries. Recipients must comply with the equal treatment policies and requirements contained in 6 C.F.R. Part 19 and other applicable statues, regulations, and guidance governing the participations of faith-based organizations in individual USDHS programs.

XXV. Non-Supplanting Requirement

Recipients receiving federal financial assistance awards made under programs that prohibit supplanting by law must ensure that federal funds do not replace (supplant) funds that have been budgeted for the same purpose through non-federal sources.

XXVI. Notice of Funding Opportunity Requirements

All the instructions, guidance, limitations, and other conditions set forth in the Notice of Funding Opportunity (NOFO) for this program are incorporated here by reference in the award terms and conditions. All recipients must comply with any such requirements set forth in the program NOFO.

XXVII. Patents and Intellectual Property Rights

Recipients are subject to the Bayh-Dole Act, 35 U.S.C. § 200 et seq, unless otherwise provided by law. Recipients are subject to the specific requirements governing the development, reporting, and disposition of rights to inventions and patents resulting from federal financial assistance awards located at 37 C.F.R. Part 401 and the standard patent rights clause located at 37 C.F.R. § 401.14.

XXVIII. Procurement of Recovered Materials

States, political subdivisions of states, and their contractors must comply with Section 6002 of the Solid Waste Disposal Act, Pub. L. 89-272 (1965), (codified as amended by the Resource Conservation and Recovery Act, 42 U.S.C. § 6962.) The requirements of Section 6002 include procuring only items designated in guidelines of the Environmental Protection Agency (EPA) at 40 C.F.R. Part 247 that contain the highest percentage of recovered materials practicable, consistent with maintaining a satisfactory level of competition.

XXIX. Rehabilitation Act of 1973

Recipients must comply with the requirements of Section 504 of the Rehabilitation Act of 1973, Pub. L. 93-112 (1973), (codified as amended at 29 U.S.C. § 794,) which provides that no otherwise qualified handicapped individuals in the United States will, solely by reason of the handicap, be excluded from participation in, be denied the benefits of, or be subjected to discrimination under any program or activity receiving federal financial assistance.

XXX. Reporting of Matters Related to Recipient Integrity and Performance General Reporting Requirements.

If the total value of any currently active grants, cooperative agreements, and procurement contracts from all federal awarding agencies exceeds $10,000,000 for any period of time during the period of performance of this federal award, then the recipients must comply with the requirements set forth in the government-wide Award Term and Condition for Recipient Integrity and Performance Matters located at 2 C.F.R. Part 200, Appendix XII, the full text of which is incorporated here by reference in the award terms and conditions.

XXXI. Reporting Subawards and Executive Compensation Reporting of first tier subawards.

Recipients are required to comply with the requirements set forth in the government-wide award term on Reporting Subawards and Executive Compensation located at 2 C.F.R. Part 170, Appendix A, the full text of which is incorporated here by reference in the award terms and conditions.

XXXII. SAFECOM

Recipients receiving federal financial assistance awards made under programs that provide emergency communication equipment and its related activities must comply with the SAFECOM Guidance for Emergency Communication Grants, including provisions on technical standards that ensure and enhance interoperable communications.

XXXIII. Terrorist Financing

Recipients must comply with E.O. 13224 and U.S. laws that prohibit transactions with, and the provisions of resources and support to, individuals and organizations associated with terrorism. Recipients are legally responsible to ensure compliance with the Order and laws.

XXXIV. Trafficking Victims Protection Act of 2000 (TVPA) Trafficking in Persons.

Recipients must comply with the requirements of the government-wide financial assistance award term which implements Section 106 (g) of the Trafficking Victims Protection Act of 2000 (TVPA), codified as amended at 22 U.S.C. § 7104. The award term is located at 2 C.F.R. § 175.15,

the full text of which is incorporated here by reference.

XXXV. Universal Identifier and System of Award Management

Requirements for System for Award Management and Unique Entity Identifier Recipients are required to comply with the requirements set forth in the government-wide financial assistance award term regarding the System for Award Management and Universal Identifier Requirements located at 2 C.F.R. Part 25, Appendix A, the full text of which is incorporated here by reference.

XXXVI. USA PATRIOT Act of 2001

Recipients must comply with requirements of Section 817 of the Uniting and Strengthening America by Providing Appropriate Tools Required to Intercept and Obstruct Terrorism Act of 2001 (USA PATRIOT Act), which amends 18 U.S.C. §§ 175–175c.

XXXVII. Use of USDHS Seal, Logo and Flags

Recipients must obtain permission from their USDHS FAO prior to using the USDHS seal(s), logos, crests or reproductions of flags or likenesses of USDHS agency officials, including use of the United States Coast Guard seal, logo, crests or reproductions of flags or likenesses of Coast Guard officials.

XXXVIII. Whistleblower Protection Act

Recipients must comply with the statutory requirements for whistleblower protections (if applicable) at 10 U.S.C § 2409, 41 U.S.C. § 4712, and 10 U.S.C. § 2324, 41 U.S.C. §§ 4304 and 4310.

The remainder of this page is intentionally left blank.

ATTACHMENT 2
Reimbursement Checklist

DHSEM reserves the right to update this check list throughout the life of the grant to ensure compliance with applicable federal and state rules and regulations. ***Please only check the categories that apply to the reimbursement you are currently requesting.***

EQUIPMENT

- ☐ Have all invoices been included?
- ☐ Has AEL # been identified for each purchase?
- ☐ If service/warranty expenses are listed, are they only for the performance period of the grant?
- ☐ Has proof of payment been included? (e.g., canceled check, Electronic Funds Transfer (EFT) confirmation, or P-Card back up documentation which will include receipt with vendor, copy of credit card statement showing expense charged, and payment to credit card Company for that statement)

CONSULTANTS/CONTRACTORS

- ☐ Does the amount billed by consultant add up correctly?
- ☐ Has all appropriate documentation to denote hours worked been properly signed?
- ☐ Have copies of all planning materials and work product (e.g., meeting documents, copies of plans) been included? (If a meeting was held by recipient or contractor/consultant of recipient, an agenda and signup sheet with meeting date must be included).
- ☐ Has the invoice from consultant/contractor been included?
- ☐ Has proof of payment been included? (e.g., canceled check, Electronic Funds Transfer (EFT) confirmation, or P-Card back up documentation which will include receipt with vendor, copy of credit card statement showing expense charged, and payment to credit card Company for that statement).

SALARY POSITIONS (Note: this applies to positions billed under M&A)

- ☐ Have the following been provided: signed time sheet by employee and supervisor and proof that employee was paid for time worked (statement of earnings, copy of payroll check or payroll register)?
- ☐ Has a time period summary sheet been included for total claimed amount?
- ☐ Has a general ledger payroll report been included for total claimed amount? Ensure this report includes both employee and employer payroll information (i.e., benefits/contributions).
- ☐ Does the back-up documentation include a copy of the check stub per employee for the time period covered?
- ☐ Does the back-up documentation provided match the time period for which reimbursement is being requested?

OTHER:

- ☐ If EHP form needed – has copy of it and approval from USDHS/FEMA been included?

MATCHING FUNDS (IF APPLICABLE)

- ☐ Contributions are from Non-Federal funding sources.
- ☐ Contributions are from cash or in-kind contributions which may include training investments.
- ☐ Contributions are not from salary, overtime, or other operational costs unrelated to training.

This page is intentionally left blank.

ATTACHMENT 3
Glossary and Definitions

Applicant: When an entity applies for PA funding, it is the **Applicant**. Once the Applicant receives funding, it is either the **recipient, pass-through entity,** or a **sub-recipient**.

Authorized Equipment List (AEL): The Authorized Equipment List (AEL) is a list of approved equipment types allowed under FEMA's preparedness grant programs.

Backfill: The act of filling a position left by another employee who has been moved to another role.

Cost Match: Recipient or sub-recipient contribution. This can be cash (hard match) or third party in-kind (soft match). 2 C.F.R. 200.306.

Cost Sharing or Matching: The portion of project costs not paid by federal funds or contributions (unless otherwise authorized by federal statute). 2 C.F.R. 200.1 Cost sharing or matching.

Declared fire: An uncontrolled fire or fire complex, threatening such destruction as would constitute a major disaster, which the FEMA Regional Administrator has approved in response to a state's request for a fire management assistance declaration and in accordance with the criteria listed in 44 C.F.R. 204.21. Fire Management Assistance Declaration Criteria.

Disallowed costs: Those charges to a federal award that the federal awarding agency or pass-through entity determines to be unallowable, in accordance with the applicable federal statutes, regulations, or the terms and conditions of the federal award. 2 C.F.R. 200.1 Disallowed costs.

Demobilization: The process and procedures for deactivating, disassembling, and transporting back to their point of origin all resources that had been provided to respond to and support a declared fire.

Disaster: An emergency condition affecting all or part the state, overwhelming local resources, in which there is likely to be a significant recovery period. The Governor may request a Robert T. Stafford Act (Stafford Act) Disaster Declaration through FEMA, asking for the Public Assistance Program, Fire Management Assistance Program, Individual Assistance Program and Mitigation based upon known and estimated damage assessment data.

Disaster Recovery Reform Act of 2018 (DRRA): The DRRA represents the most comprehensive Emergency Management reform since the Post-Katrina Emergency Management Reform Act in 2006. It includes a larger and more reliable funding stream for pre-disaster mitigation, expanded assistance for individuals and households, and support for states, localities, tribes, and territories (SLTTs) to develop their own emergency management capabilities.

Emergency: A condition in which local and state emergency response agencies are overwhelmed by an incident to the point that federal assistance is needed. Unlike a disaster, an emergency does not have a recovery phase. The Governor may request a Stafford Act Emergency Declaration through FEMA, asking for the Public Assistance Program and/or Fire Management Assistance Grant.

Emergency Work: Work which must be done before, during and immediately after a disaster event to save lives and to protect improved property and public health and safety or to avert or lessen the threat of a major disaster. The FEMA Public Assistance emergency work Categories are:

- Category A (Debris Removal)
- Category B (Emergency Protective Measures)

Equipment: Tangible personal property (including information technology systems) having a useful life of more than one year and a per-unit acquisition cost which equals or exceeds the lesser of the capitalization level established by the non-federal entity for financial statement purposes, or $5,000. 2 C.F.R. 200.1 Equipment.

*Expenditures***:** Charges made by a non-federal entity to a project or program for which a federal award was received. 2 C.F.R. 200.1 Expenditures.

Federal Award: The federal financial assistance that a recipient receives directly from a federal awarding agency or indirectly from a pass-through entity. 2 C.F.R. 200.1 Federal award.

Federal Emergency Management Agency (FEMA): The federal agency responsible for coordinating disaster recovery efforts in partnership with state, local, and tribal governments.

Federal Share: The portion of the federal award costs that are paid using federal funds. 2 C.F.R. 200.1 Federal share.

FEMA/State Agreement: A formal, legal document between FEMA and the state or a tribal government giving the understandings, commitments, terms, conditions, and timelines for assistance resulting from a federal disaster, emergency, or fire declaration, declared by the President.

Governor's Authorized Representative (GAR): The person designated by the Governor to execute all necessary documents for disaster assistance programs on behalf of the state and local grant recipients. The GAR is responsible for state compliance with the FEMA/State Agreement. The GAR may also be designated as the State Coordinating Officer.

Hazard Mitigation: Mitigation is the effort to reduce loss of life and property by lessening the impact of disasters.

Hazard Mitigation (Sections 404 and 406): Section 406 Mitigation measures are specific to the mechanism of the declared disaster and are an integral part of the reconstructed work on a facility or will protect or benefit the repaired portion of the facility. These are different from mitigation measures that are considered for eligibility under the Hazard Mitigation Grant Program (HMGP) of Section 404 of the Stafford Act. In the HMGP program, measures are proposed that may involve facilities other than those damaged by the disaster, new facilities, or even non-structural measures such as the development of floodplain management regulations.

Incident Period: The time interval during which the declared disaster occurs. The Regional Administrator, in consultation with the Governor's Authorized Representative and the Principal Advisor will establish the incident period. Generally, costs must be incurred during the incident period to be considered eligible.

The declaration designates the incident period. The incident period is the span of time during which the federally declared incident occurs. This period varies in length, depending on the incident.

Improved Project: When performing restoration work on a damaged facility, a sub-recipient may use the opportunity to make improvements to the facility. Projects that incorporate such improvements are improved projects. The improved facility must have the same function and at least the equivalent capacity as that of the pre-disaster facility. Federal funding for improved projects is limited to the lesser of the following: the federal share of the approved estimated costs to restore the damaged facility to its pre-disaster design and function or the federal share of the actual cost of completing the improved project. The sub-recipient must obtain FEMA approval, via the NMDHSEM, for an improved project prior to

construction.

Indirect Costs: Costs a recipient or sub-recipient incurs for a common or joint purpose benefitting more than one cost objective that are not readily assignable to the cost objectives specifically benefited.

Joint Field Office (JFO): A temporary facility established in or near a declared disaster area to serve as the field headquarters for FEMA, other federal and state recovery personnel, and serve as the focal point for federal disaster operations, direction, coordination, and information.

Large Project: An approved project estimated to cost the same as or more than the large project threshold amount. The large project threshold is a dollar amount adjusted annually to reflect changes in the Consumer Price Index for all urban consumers. The large project threshold amount, applicable to all projects, is the amount in effect on the declaration date of the disaster, regardless of when project approval is made or when the work is performed.

Management Costs: Management costs are any indirect costs, any direct administrative costs, and any other administrative expenses associated with the administration of HMA awards and subawards. Management costs are provided under HMGP, HMGP Post Fire, BRIC and FMA. For the Hazard Mitigation Grant Program (HMGP) and Hazard Mitigation Grant Program Post Fire (HMGP Post Fire), recipients will be reimbursed no more than 15% of the total amount of the award, of which not more than 10% may be used by the recipient and 5% by the subrecipient. Under HMGP and HMGP Post Fire, recipients' Administrative Plans must include procedures for monitoring and reporting on subrecipient management costs before receiving funding for management costs. For Building Resilient Infrastructure and Communities (BRIC) and Flood Mitigation Assistance (FMA), recipients may apply for a maximum of 10% of the total funds requested in their application cost estimate (federal and non-federal shares) for management costs to support the sub-applications included as part of their award. Subapplicants for BRIC and FMA may apply for a maximum of 5% of the total funds requested in a sub-application for management costs. Additional information is available in FEMA Policy #104-11-1, Hazard Mitigation Grant Program Management Costs (Interim).

Pass-through Entity: A non-federal entity that provides a subaward to a sub-recipient to carry out part of a federal program. 2 C.F.R. 200.1 Pass through entity (PTE).

Performance Period for Hazard Mitigation Assistance: The period of time stipulated in the Sub-recipient Grant Agreement, as amended, during which the sub-recipient must finish the approved work. Projects completed after the active Period of Performance deadline will be considered ineligible.

Quarterly Financial Progress Report: The information in this report is used by NMDHSEM to monitor sub-recipient cash flow, performance, and project implementation to ensure proper use of federal funds.

Recipient: Formally referred to as the grantee or sub-grantee or applicant. Federally Recognized Indian Tribal Governments may also be Recipients if they so desire and if they meet FEMA requirements.

Recovery Officer: Aids in the administration of disaster recovery grant programs for statewide disasters and emergencies. Coordinates and co-administers disaster recovery grant programs, ensuring that they are implemented and carried out according to state and federal program requirements.

Recovery Unit: This is the unit within the NMDHSEM Response and Recovery Bureau designated as responsible for the programmatic administration of the FEMA PA and FMAG Programs.

Recovery Unit Manager: Responsible for administering and supervising staff responsible for federal and state disaster recovery programs and serves as the Deputy State Coordinating Officer (SCO) for

emergencies or major disaster declarations.

Response & Recovery Bureau Chief: Responsible for supervising staff responsible for federal and state disaster recovery programs and staff that provides operational response capabilities to support the citizens of New Mexico. This position also serves as State Coordinating Officer (SCO) for emergencies or major disaster declarations.

Request for Approval Form: Used by sub-recipient to request approval from NMDHSEM to expend funds for previously identified and approved projects. Approval must be received prior to expenditure.

Small Project: An approved project estimated to cost less than the large project threshold amount.

State Coordinating Officer (SCO): The person designated by the Governor to coordinate state and local disaster assistance efforts with those of the federal government. The GAR may also be the SCO. The Governor will name the GAR and the SCO in the FEMA/State Agreement.

Sub-recipient: Formally referred to as the sub-grantee or applicant, is a state agency, local government, tribal government, other legal governmental entity, or a private non-profit (PNP) organization that receives a sub-grant award and which is accountable to the state for the use of the funds provided. The FEMA reserves the final decision as to sub-recipient eligibility.

Supplanting: When a state or unit of local government reduces state or local funds for an activity specifically because federal funds are available (or expected to be available) to fund that same activity. When supplanting is not permitted, federal funds must be used to **supplement** existing state or local funds for program activities and may not replace state or local funds that have been appropriated or allocated for the same purpose. Additionally, federal funding may not replace state or local funding that is required by law. If a question of supplanting arises, the sub-recipient or grantee will be required to substantiate that the reduction in non-federal resources occurred for reasons other than the receipt or expected receipt of federal funds. US Department of Justice Office of Justice Programs, Grants 101.

The remainder of this page is intentionally left blank.

ATTACHMENT 4
Acronyms

AEL: Authorized Equipment List
AGAR: Alternate Governor's Authorized Representative
ASB: Administrative Services Bureau of NMDHSEM
CFDA: Catalog of Federal Domestic Assistance
DAC: Direct Administrative Costs
DOT: Department of Transportation
DPS: Department of Public Safety
DRRA: Disaster Recovery Refo1m Act of 2018
DSCO: Deputy State Coordinating Officer
DSIBD: Deputy State Infrastructure Branch Director
DSPAGS: Deputy State Public Assistance Group Supervisor
EMAC: Emergency Management Assistance Compact
EMMIE: Emergency Management Mission Integrated Environment
EMNRD: Energy, Minerals and Natural Resources Department
FEMA: Federal Emergency Management Agency
FFATA- Federal Funding Accountability and Transparency Act
FMAG - Fire Management Assistance Grant
GAR: Governor's Authorized Representative
IMAS: Intrastate Mutual Aid System
INF: Immediate Needs Funding
IOF: Initial Operating Facility
JFO: Joint Field Office
NSPO: Net Small Project Overrun
NMDHSEM: New Mexico Department of Homeland Security and Emergency Management
ONA: Other Needs Assistance
OMB: Office of Management and Budget
PA: Public Assistance
PAGS: Public Assistance Group Supervisor
PAPPG: Public Assistance Program and Policy Guide
PDA: Preliminary Damage Assessment
PDMG: Program Delivery Manager
PIO: Public Information Officer
PNP: Private Non-Profit
POP: Period of Performance
PW: Project Worksheet
R&R: Response & Recovery Bureau
REC: Record of Environmental Consideration
RO: Recovery Officer
RP A - Request for Public Assistance
SCO: State Coordinating Officer
SOW: Scope of Work
SHARE: New Mexico Statewide Human Resources, Accounting, and Management Reporting System

SIBD: State Infrastructure Branch Director
SPAGS: State Public Assistance Group Supervisor
SPAO: State Public Assistance Officer
USDHS: United States Department of Homeland Security
USFS: US Forest Service
VFO: Virtual Field Office

The remainder of this page is intentionally left blank.

2023_HMGP_SGA_HazardMitigationPlan

Final Audit Report 2024-10-02

Created:	2024-10-02
By:	JULIE KENNY (jckenny@santafenm.gov)
Status:	Signed
Transaction ID:	CBJCHBCAABAAPILoCCyJ_K5S32r5PWYAV5Zcob1IKO6d

"2023_HMGP_SGA_HazardMitigationPlan" History

Document created by JULIE KENNY (jckenny@santafenm.gov)
2024-10-02 - 2:52:50 PM GMT- IP address: 63.232.20.2

Document emailed to Rebecca Mnuk-Herrmann (ramnukherrmann@santafenm.gov) for signature
2024-10-02 - 2:53:31 PM GMT

Email viewed by Rebecca Mnuk-Herrmann (ramnukherrmann@santafenm.gov)
2024-10-02 - 3:42:01 PM GMT- IP address: 104.47.64.254

Document e-signed by Rebecca Mnuk-Herrmann (ramnukherrmann@santafenm.gov)
Signature Date: 2024-10-02 - 3:42:21 PM GMT - Time Source: server- IP address: 63.232.20.2

Agreement completed.
2024-10-02 - 3:42:21 PM GMT

Powered by Adobe Acrobat Sign

City of Santa Fe New Mexico

Finance Department

Project Ledger Request Form

Date of Request: 9/17/2024

Project Title: HAZARD MITIGATION PLAN & WILDFIRE RISK ASSESSMENT

Project Type: ☐ CIP ☑ Grant ☐ Internal Tracking

Project ID: OEM2522101

Grant ID: S2533/F2512

Approved By: _____

CT (Finance Use Only)

Department: OEM Project Manager: KYLE MORGAN Ext: 6704

Project Date Range: 7/23/2024 to 11/14/2027 ☐ Create Fixed Asset

---

☑ Multi-Funding (complete all funding sources, should equal 100%)

Funding Source: DHSEM-SUB GRANT (FEMA) DR-4652-0011-NM % of Funding: 75

MUNIS ORG: 2212850 MUNIS OBJ: 490580 Awarded Amount: 124574.82

Funding Source: NMDFA 24-ZI5044-MG25-084 % of Funding: 25

MUNIS ORG: 2212850 MUNIS OBJ: 490210 Awarded Amount: 38934.25

Expense String Phase:

A project must have at least one phase identified, this can be used as an additional level of tracking, for example, CIP - Design, Construction, etc. For Grants can be used as reimbursable types, such as transportation, salaries.

(You can create more than one phase and you can default MUNIS ORGs and OBJs, optional)

Phase: PLANNING, GRANT MGMT. MUNIS ORG: 2212850 MUNIS OBJ: 510300

Grants Only (list all grants if applicable):

Grantor Name: FED P/T NMDHEM-FEMA-DR-4652-0011-NM Awarded Amount: 124574.82

AR Charge Code: 2122850.490580 ☐ Grant funds multiple projects (Complete a form for each project)

Grantor Id: _____ Federal CFDA (if applicable): 97.039

Grantor Name: NMDFA 24-ZI5044-MG25-084 Awarded Amount: 38934.25

AR Charge Code: 2212850.490210 ☐ Grant funds multiple projects (Complete a form for each project)

Grantor Id: _____ Federal CFDA (if applicable): N/A

(If grants please provide all grant award documents with form) ☑ Attached Grant Documentation

Signature: Matthew Bonifer
Matthew Bonifer (Sep 20, 2024 15:41 MDT)

Email: mtbonifer@santafenm.gov

2023_HMGP_HazardMitigationPlan_Council_Packet_2024-10-23

Final Audit Report 2024-11-01

Created:	2024-10-30
By:	Justin Gonzales (jmgonzales@santafenm.gov)
Status:	Signed
Transaction ID:	CBJCHBCAABAAeuZ-CNx17GJSTweIu8Jqf9ZfnzNjnKK-

"2023_HMGP_HazardMitigationPlan_Council_Packet_2024-10-23" History

Document created by Justin Gonzales (jmgonzales@santafenm.gov)
2024-10-30 - 4:50:13 PM GMT- IP address: 63.232.20.2

Document emailed to BRIAN WILLIAMS (bgwilliams@santafenm.gov) for signature
2024-10-30 - 4:54:35 PM GMT

Email viewed by BRIAN WILLIAMS (bgwilliams@santafenm.gov)
2024-10-30 - 5:00:51 PM GMT- IP address: 104.47.64.254

Document e-signed by BRIAN WILLIAMS (bgwilliams@santafenm.gov)
Signature Date: 2024-10-30 - 5:01:23 PM GMT - Time Source: server- IP address: 63.232.20.2

Document emailed to bjmoya@santafenm.gov for signature
2024-10-30 - 5:01:25 PM GMT

Email viewed by bjmoya@santafenm.gov
2024-10-30 - 5:01:49 PM GMT- IP address: 98.60.113.23

Signer bjmoya@santafenm.gov entered name at signing as Brian J Moya
2024-10-30 - 5:02:47 PM GMT- IP address: 98.60.113.23

Document e-signed by Brian J Moya (bjmoya@santafenm.gov)
Signature Date: 2024-10-30 - 5:02:49 PM GMT - Time Source: server- IP address: 98.60.113.23

Document emailed to HENRI HAMMOND-PAUL (hmhammondpaul@santafenm.gov) for signature
2024-10-30 - 5:02:53 PM GMT

Email viewed by HENRI HAMMOND-PAUL (hmhammondpaul@santafenm.gov)
2024-10-31 - 3:35:17 PM GMT- IP address: 104.47.64.254

Powered by Adobe Acrobat Sign

Document e-signed by HENRI HAMMOND-PAUL (hmhammondpaul@santafenm.gov)
Signature Date: 2024-10-31 - 3:35:35 PM GMT - Time Source: server- IP address: 63.232.20.2

Document emailed to mtbonifer@santafenm.gov for signature
2024-10-31 - 3:35:37 PM GMT

Email viewed by mtbonifer@santafenm.gov
2024-10-31 - 3:43:09 PM GMT- IP address: 104.47.64.254

Signer mtbonifer@santafenm.gov entered name at signing as Matthew Bonifer
2024-10-31 - 4:10:27 PM GMT- IP address: 63.232.20.2

Document e-signed by Matthew Bonifer (mtbonifer@santafenm.gov)
Signature Date: 2024-10-31 - 4:10:29 PM GMT - Time Source: server- IP address: 63.232.20.2

Document emailed to ajhopkins@santafenm.gov ajhopkins@santafenm.gov (ajhopkins@santafenm.gov) for signature
2024-10-31 - 4:10:31 PM GMT

Email viewed by ajhopkins@santafenm.gov ajhopkins@santafenm.gov (ajhopkins@santafenm.gov)
2024-10-31 - 4:13:10 PM GMT- IP address: 104.47.64.254

Document e-signed by ajhopkins@santafenm.gov ajhopkins@santafenm.gov (ajhopkins@santafenm.gov)
Signature Date: 2024-10-31 - 4:14:01 PM GMT - Time Source: server- IP address: 63.232.20.2

Document emailed to EMILY OSTER (ekoster@santafenm.gov) for signature
2024-10-31 - 4:14:03 PM GMT

Email viewed by EMILY OSTER (ekoster@santafenm.gov)
2024-11-01 - 5:05:19 PM GMT- IP address: 104.47.64.254

Document e-signed by EMILY OSTER (ekoster@santafenm.gov)
Signature Date: 2024-11-01 - 5:11:02 PM GMT - Time Source: server- IP address: 63.232.20.2

Document emailed to JOHN BLAIR (jwblair@santafenm.gov) for signature
2024-11-01 - 5:11:04 PM GMT

Email viewed by JOHN BLAIR (jwblair@santafenm.gov)
2024-11-01 - 6:44:48 PM GMT- IP address: 104.47.64.254

Signer JOHN BLAIR (jwblair@santafenm.gov) entered name at signing as John Blair
2024-11-01 - 6:45:17 PM GMT- IP address: 63.232.20.2

Document e-signed by John Blair (jwblair@santafenm.gov)
Signature Date: 2024-11-01 - 6:45:19 PM GMT - Time Source: server- IP address: 63.232.20.2

Powered by Adobe Acrobat Sign

Agreement completed.

2024-11-01 - 6:45:19 PM GMT

CITY OF SANTA FE

Date: October 23, 2024

To: Governing Body

Via: Henri Hammond-Paul, Community Health and Safety Director
HENRI HAMMOND-PAUL (Oct 31, 2024 09:35 MDT)
Brian Moya, Fire Department Chief
Brian J Moya (Oct 30, 2024 11:02 MDT)

From: **Brian Williams, Office of Emergency Management Director**
Nathan Miller, Wildland Fire Superintendent
BRIAN WILLIAMS (Oct 30, 2024 11:01 MDT)

Subject: **Hazard Mitigation Grant Program Grant Approval – Hazard Mitigation Plan and Wildfire Risk Assessment Plans**

ITEM AND ISSUE:
Request Approval of the 2023 Hazardous Mitigation Grant Program (HMGP) Sub-Grant Agreement DR-4652-0011-NM in the Total Amount of $163,509.97 with the New Mexico Department of Homeland Security and Emergency Management for Updating the City of Santa Fe Hazard Mitigation Plan and Development of a Wildfire Risk Assessment. Brian Williams, Director Office of Emergency Management, bgwilliams@santafenm.gov.

Request Approval of a New Mexico Match Fund Grant 24-ZI5044- MG25-84 in the Total Amount of $38,934.25 with the New Mexico Department of Finance and Administration for Federal Grant Match Funds. Brian Williams, Director Office of Emergency Management, bgwilliams@santafenm.gov.

Request Approval of a FY25 BAR to Budget $163,509.97 in Awarded Grant Funds to the Office of Emergency Management Professional Contracts.

Action Requested: Grant Approval (2); BAR approval

BACKGROUND AND SUMMARY:
The City of Santa Fe applied for this reimbursable grant through the New Mexico Department of Homeland Security and Emergency Management (DHSEM) and the Federal Emergency Management Agency (FEMA). The Hazard Mitigation Grant Program (HMGP) supports states, local communities, tribes and territories as they undertake hazard mitigation projects, reducing the risks they face from disasters and natural hazards.

The Office of Emergency Management and the Santa Fe Fire Department Wildland Fire Division coordinated to secure this grant for developing a comprehensive update to the City of Santa Fe's Hazard Mitigation Plan (HMP), as well as developing a new citywide Wildfire Risk Assessment. Both efforts will be contractor lead in accordance with relevant requirements from FEMA.

The completed Hazard Mitigation Plan will be used to prioritize future mitigation projects as well as updates to the City's Threat and Hazard Identification and Risk Assessment, and Integrated Preparedness Plans.

The Wildfire Risk Assessment will additionally include an analysis of existing wildland firefighting capabilities and the City's current preparedness for responding to wildfire threats, as well as recommendations for improving these capabilities.

The Office of Emergency Management applied for matching funds to cover the local share through the New Mexico Department of Finance and Administration (DFA) after receiving the federal grant award. These funds will cover the entirety of the local share requirement (25%). The goal of this program is to leverage state funds to allow for increased grant applications and awards for local communities throughout the state. The HMGP grant amount also includes $7,772.05 in 100% federally funded subrecipient management costs to assist with capacity in managing the grant.

The Office of Emergency Management will manage both grants and the Hazard Mitigation Plan project, while the Fire Department will manage the Wildfire Risk Assessment, with input and assistance from the Office of Emergency Management and other stakeholders.

The term of the grant ends on November 14, 2027.

PROCUREMENT METHOD:
Not Applicable. Grant approval only.

Chief Procurement Officer Approval:_____ **Date:**_____
Comment/Exceptions:_____

Supporting Information:

CONTRACT NUMBER:
The FY25 Project ledger number is OEM2522101

SOURCE/REVENUE: ☐Expense ☒Revenue

The funding source is:
Federal Share
Fund Name/Number: Emergency Services/Fund 231
Munis Org Name/Number: Emergency Management/2212850
Munis Object Name/Number: Fed Grant (FEMA)/490580

Local Share
Fund Name/Number: Emergency Services/Fund 231
Munis Org Name/Number: Emergency Management/2212850
Munis Object Name/Number: State Grant (DFA)/490210

List grant award number: *DR-4652-0011-NM (FEMA) / 24-ZI5044- MG25-84 (DFA)*

Grant Manager / Accounting Officer Approval: Matthew Bonifer
Matthew Bonifer (Oct 31, 2024 10:10 MDT) **Date:** 10/31/2024
Comment/Exceptions: _____

Project Ledger #: OEM2522101

Budget Officer Approval: Andy Hopkins **Date:** 10/31/2024
Comment/Exceptions: _____

CAPITAL ASSET (will this procurement result in a tangible item that costs more than $5,000?):

☐Yes | ☒ No

 # (if known): _____

Repair or Replacement of Existing Equipment:

☐Yes | ☒ No
If yes -> ☐Repair | ☐ Replacement

Please explain: _____

Capital Project:
(New and improvement projects that are going to cost $10,000 or more)
☐ Yes | ☒ No

Project Ledger #: _____

Anticipated length of project: 24 months _____

Asset Manager Approval: _____ **Date:** _____
Comment/Exceptions: _____

Department Approvals:
IT Components: ☐ **Yes | ☒ No**
Vehicles: ☐ **Yes | ☒ No**
Facilities, Furniture, Fixtures, Equipment: ☐ **Yes | ☒ No**

Approval: _____ **Title:** _____ **Date**: _____
Approval: _____ **Title:** _____ **Date**: _____
Comment & Exceptions: _____

Department Contract Administrator Contact Info:
Justin Gonzales, jmgonzales@santafenm.gov

ATTACHMENTS:

1. Federal Sub-Recipient Grant Agreement
2. State Grant Agreement
3. Budget Amendment Resolution

Log # *{Finance use only}*:	
Journal # *{Finance use only}*:	

City of Santa Fe, New Mexico
BUDGET AMENDMENT RESOLUTION (BAR)

DEPARTMENT / DIVISION NAME	DATE
Public Works / Stormwater CIP	9/11/2024

ITEM DESCRIPTION	ORG	OBJECT	PROJECT	INCREASE	DECREASE
EXPENDITURES				*{enter as positive #}*	*{enter as negative #}*
PROFESSIONAL CONTRACTS - Project Costs	2212850	510300	OEM2522101	155,737	
PROFESSIONAL CONTRACTS - Grant Management Costs	2212850	510300	OEM2522101	7,772	
REVENUES				*{enter as negative #}*	*{enter as positive #}*
FEMA - Hazard Mitigation Plan / Wildfire Risk Assessment	2212850	490580	OEM2522101	(116,803)	
DFA - Hazard Mitigation Plan / Wildfire Risk Assessment	2212850	490210	OEM2522101	(38,934)	
FEMA - Subrecipient Management Costs	2212850	490580	OEM2522101	(7,772)	
				$ (0.00)	$ -

JUSTIFICATION: *(use additional page if needed)*
--Attach supporting documentation/memo

FY 25 budget increase for subrecipient grant award: DR-5430-0011-NM: FEMA Hazard Mitigation Grant for Hazard Mitigation Plan Update and Wildfire Risk Assessment in the amount of $116,803.77 for Planning and $7,772.05 for Management Costs.

Expires 11/14/2027

FY 25 budget increase for Department of Finance and Administration State Matching Grant in the amount of $38,934.25 to cover 25% local match requirement of FEMA Grant (DR-5430-0012-NM). Expires 5/14/2028

{Complete section below if BAR results in a net change to ANY Fund}

Fund(s) Affected	Fund Balance Increase/(Decrease)
TOTAL:	**0**

Kyle Morgan — 9/11/2024
Prepared By *{print name}* — Date

Division Director Signature *{optional}* — Date

HENRI HAMMOND-PAUL (Oct 31, 2024 09:35 MDT) — 10/31/2024
Department Director Signature — Date

{Use this form for Finance Committee/ City Council agenda items ONLY}

CITY COUNCIL APPROVAL

City Council Approval Date:

Agenda Item #:

Andy Hopkins — 10/31/2024
Budget Officer — Date

Finance Director *{≤ $5,000}* — Date

City Manager *{≤ $60,000}* — Date

New Mexico Department of Finance and Administration

Item #24-0637

407 Galisteo St,
Santa Fe, NM 87501
(505) 827-4985

Governor Michelle Lujan Grisham
Cabinet Secretary Wayne Propst

Infrastructure Planning & Development Division
Wesley Billingsley, Division Director

RECIPIENT:

City of Santa Fe

APPROPRIATION NUMBER:	ALLOCATION AMOUNT:	REVERSION DATE:
24-ZI5044- MG25-84	$38,934.25	Six (6) months after the end date of the associated federal grant's period of performance.

ALLOCATION PURPOSE

$38,934.25 for costs to meet cost sharing requirements for City of Santa Fe Hazard Mitigation Plan Update & Wildfire Risk Assessment. Funds unexpended by the date specified in the period of performance terms of your federal grant agreement, will be reverted to the State of New Mexico within 6 months of the federal grant closeout.

ALLOCATION DISBURSEMENT

100% of the allocated funds will be disbursed upon execution of the agreement. The Allocation Recipient agrees to submit Annual reports using Exhibit A, Match Fund Annual Report Form, providing updates on the status of the expenditures from this appropriation. The Recipient also understands and agrees to use the allocated funds in accordance with the New Mexico Match Fund Policy.

CERTIFICATION

I hereby certify that City of Santa Fe

1. Will only use the allocated funds to carry out and/or perform activities described in allocation language.
2. Will submit annual reporting through the Match Fund Annual Report link.
3. Will adhere to the Match Fund policy.
4. Will adhere to the provisions of Attachment A- Special Provisions

John Blair
John Blair (Nov 1, 2024 12:45 MDT)

City Manager, **City of Santa Fe** — Date: 11/01/2024

Emily K. Oster

Finance Director, **City of Santa Fe** — Date: 11/01/2024

PUBLICITY

Any Publicity regarding this agreement must not be released without prior written approval from the DFA. For purposes of this agreement, "Publicity" means notices, informational pamphlets, press releases, email response, research, reports, signs, and similar public notices prepared by or for the Subrecipient or jointly with others. The Recipient shall not issue, without consent of the DFA, any press release, or make any public announcement with respect to this agreement. In the performance of responsibilities under this agreement, the Recipient agrees to obtain approval of the DFA in advance with respect to all Public Relations, all communications with media, or all communications with any other member of the public with respect to this agreement, except to acknowledge that an agreement does exist. For purposes of this agreement, "Public Relations" includes community relations and means those activities dedicated to maintaining the image of the DFA or maintaining or promoting understanding and favorable relations with the community or public at large or any segment of the public. For violations of this provision, as determined solely by the DFA, the DFA reserves the right to terminate this agreement.

New Mexico
Department *of* Finance
and Administration

407 Galisteo St,
Santa Fe, NM 87501
(505) 827-4985

Governor Michelle Lujan Grisham
Cabinet Secretary Wayne Propst

Infrastructure Planning & Development Division
Wesley Billingsley, Division Director

APPROVAL

In accordance with the authority conferred on the Department of Finance & Administration by the statute appropriating these funds, I hereby approve this certification for MG25-84 in the amount of $38,934.25.

Wesley Billingsley
Director, Infrastructure Planning & Development Division

Date

New Mexico
Department *of* Finance
and Administration

407 Galisteo St,
Santa Fe, NM 87501
(505) 827-4985

Governor Michelle Lujan Grisham
Cabinet Secretary Wayne Propst

Infrastructure Planning & Development Division
Wesley Billingsley, Division Director

OPTIONAL ATTACHMENT A
SPECIAL CONDITIONS

The grant award requires grantees' accounting methods and procedures, including their internal control framework, to be scrutinized, so as to safeguard State appropriations and assets acquired with such appropriations. This Matching Grant Special Grant Condition(s) **Attachment A** is necessary pursuant to Executive Order 2013-006 (2.A.2.a-c, if applicable), due to the Grantees' material weaknesses, significant deficiencies, or findings that raised concerns as to the ability to expend grant funds in accordance with applicable law in the organization's FY23 audit. The Special Conditions identified below apply to the authorized agent, City of Santa Fe.

Procurement - All purchases or contracts the Grantee enters that shall use funding from the Department capital appropriations grant must be approved by the Department prior to the initiation of implementing purchasing documents. The Grantee shall receive such prior approval via official correspondence from the Department, which may be through letter or email. The Grantee shall submit the following to the Department in pursuit of prior approval: purchasing policies and procedures, CFO certification, documentation of management and program approval, policies and procedures governing purchasing and contracting, a copy of the current procurement and contracting policies, and documentation regarding informing staff responsible for purchasing and contracting on such policies and procedures.

Cash Management – policies and procedures on cash management of federal funds. Provide procedures used to draw and disburse federal funds. Provide procedures to reconcile draw amounts, deposits and disbursements; and to prepare federal cash reporting documents to ensure compliance with federal regulations.

The City of Santa was required to and has provided sufficient documentation regarding procurement and cash management as referenced in the City of Santa Fe's FY23 Audit file. Therefore, the criteria to enter into this agreement have been met.

Wesley Billingsley Director, Infrastructure Planning & Development Division	Date

New Mexico
Department *of* Finance
and Administration

407 Galisteo St,
Santa Fe, NM 87501
(505) 827-4985

Governor Michelle Lujan Grisham
Cabinet Secretary Wayne Propst

Infrastructure Planning & Development Division
Wesley Billingsley, Division Director

Match Fund Annual Report Form
Exhibit A

Appropriation Recipient: _____

Appropriation Number: _____

Use of Appropriation Funds	**Amount**
Personnel Expenses	$ 0.00
Contract Expenses	$ 0.00
Other Expenses	$ 0.00
Total Amount of Appropriation Funds Expended	$ 0.00

Narrative *Describe the outcomes, results, benefit, and or uses of the appropriation funds*

IN WITNESS WHEREOF, the City of Santa Fe has agreed to this Grant Award as of the date of the signature by the required approval authorities below.

ATTEST:

GERALYN CARDENAS, INTERIM CITY CLERK

CITY ATTORNEY'S OFFICE:

Oct 14, 2024

REBECCA MNUK-HERRMANN, ASSISTANT CITY ATTORNEY

Match Fund Grant Agreement MG25-84 with CoSF signature page

Final Audit Report 2024-10-14

Created:	2024-10-08
By:	Amy Cawthon (amcawthon@santafenm.gov)
Status:	Signed
Transaction ID:	CBJCHBCAABAASuWLZ1sP1EGivkr6LBS-t0LZF5Q-ob_I

"Match Fund Grant Agreement MG25-84 with CoSF signature page" History

Document created by Amy Cawthon (amcawthon@santafenm.gov)
2024-10-08 - 5:31:47 PM GMT- IP address: 63.232.20.2

Document emailed to Rebecca Mnuk-Herrmann (ramnukherrmann@santafenm.gov) for signature
2024-10-08 - 5:32:18 PM GMT

Email viewed by Rebecca Mnuk-Herrmann (ramnukherrmann@santafenm.gov)
2024-10-14 - 10:00:27 PM GMT- IP address: 174.240.19.127

Document e-signed by Rebecca Mnuk-Herrmann (ramnukherrmann@santafenm.gov)
Signature Date: 2024-10-14 - 10:00:50 PM GMT - Time Source: server- IP address: 174.240.19.127

Agreement completed.
2024-10-14 - 10:00:50 PM GMT

Powered by Adobe Acrobat Sign

State of New Mexico
DEPARTMENT OF HOMELAND SECURITY & EMERGENCY MANAGEMENT
P.O. Box 27111
Santa Fe, NM 87502

SUB-RECIPIENT GRANT AGREEMENT
HAZARD MITIGATION GRANT PROGRAM

CFDA 97.039 : Hazard Mitigation Grant Program

1. SUB-GRANT NO.	2. SUB-RECIPIENT NAME		3. PROJECT NAME
DR-4652-0011-NM	City of Santa Fe		City of Santa Fe Hazard Mitigation Plan Update & Wildfire Risk Assessment
4. STATE DFA VENDOR NUMBER	**5. EIN NUMBER**	**6. SAM UEI NUMBER**	**7. CAGE CODE**
54360	85-6000168	QLN2YKMMJ8X6	4C987
8. SUB-RECIPIENT PHYSICAL ADDRESS	**9. SUB-RECIPIENT REMIT ADDRESS**		
200 Lincoln Ave, Santa Fe, NM 87501	-		
10. DHSEM CONTACT NAME:	**11. CONTACT DESK PHONE:**	(225) 313-1774	
Natalie West	**CONTACT EMAIL ADDRESS:**	DHSEM.mitigation@dhsem.nm.gov cc: natalie.west@dhsem.nm.gov	
12a. PERFORMANCE PERIOD START DATE	7/23/2024	**12b. PERFORMANCE PERIOD END DATE**	11/14/2027
13. TOTAL AWARD AMOUNT:	$163,509.07		
13a. FEDERAL SHARE	**13b. LOCAL SHARE**	**13c. STATE SHARE**	
$124,574.82	$38,934.25	$0.00	

14a. NAME OF PROJECT AWARD		14b. FEDERAL SHARE	14c. NON-FEDERAL SHARE
1	Contractual	$113,104.79	$37,701.59
2	Travel	$3,697.98	$1,232.66
3	SRMC	$7772.05	
TOTAL AMOUNT OF PROJECT		$124,574.82	$38,934.25

WHEREAS The State of New Mexico will serve as the "pass-through entity" with respect to the State's role in providing sub-awards and administering grant assistance provided to sub-recipients and may, subject to a Memorandum of Agreement, directly support project development and administration.

WHEREAS funding has been obligated from the Federal Emergency Management Agency pursuant to a request by the applicant, The Sub-Recipient, City of Santa Fe.

NOW, THEREFORE, it is mutually understood and agreed between the recipient NMDHSEM, and **City of Santa Fe** hereinafter referred to as "sub-recipient," as follows:

ARTICLE 1: REQUIREMENTS AND ASSURANCES

A. The sub-recipient hereby agrees that the performance period for the grant identified on Page 1, Box 1. is consistent with the performance period identified on Page 1, Box 12a. and 12b. This Sub-recipient Grant Agreement, as amended, shall remain open for administrative purposes if necessary to achieve final payment and financial reconciliation.

B. The sub-recipient hereby agrees that the sub-recipient official signing this Sub-recipient Grant Agreement certifies that all financial expenditures, including all supporting documents submitted for reimbursement, have been incurred by the sub-recipient and are eligible and allowable expenditures consistent with the guidelines for this award. The sub-recipient agrees to follow reasonable professional standards in all financial management and bookkeeping procedures necessary to carry out this agreement.

C. The sub-recipient hereby agrees that no member, officer, or employee of the sub-recipient organization, or its designees or agents, no member of the governing body of the locality in which the program is situated, and no other public official of such locality or localities who exercises any functions or responsibilities with respect to the program during his or her tenure or for one year after that, shall have any interest, direct or indirect, in any contract or subcontract, or the process thereof, for work to be performed in connection with this Sub-recipient Grant Agreement; the sub-recipient shall incorporate in all such contracts a provision prohibiting such interest pursuant to the purposes of this Sub-recipient Grant Agreement.

D. The sub-recipient hereby agrees that it understands and agrees that it cannot use any federal funds, either directly or indirectly, in support of the enactment, repeal, modification, or adoption of any law, regulation, or policy, at any level of government, without the express written approval of the State of New Mexico or FEMA.

E. The sub-recipient hereby agrees that FEMA reserves a royalty-free, non-exclusive, and irrevocable license to reproduce, publish, or otherwise use and authorize others to use, for federal government purposes: (1) the copyright in any work developed under this Sub-recipient Grant Agreement; and (2) any rights of copyright to which the sub-recipient purchases ownership with federal support. The sub-recipient agrees to consult with FEMA through NMDHSEM regarding allocating any patent rights that arise from or are purchased with this funding.

F. The sub-recipient hereby agrees that signatures of the sub-recipient officials on this Sub-recipient Grant Agreement attest to the sub-recipient's understanding, acceptance, and compliance with Lobbying, Debarment, Suspension, and Other Responsibility Matters; Drug- free Workplace; Conflict of Interest, and Non-Supplanting certifications. Federal funds will not be used to supplant state or local funds. Federal funds will be used to supplement existing sub-recipient funding to augment program activities and not replace those funds which have been appropriated in the budget for the same purpose.

G. The sub-recipient hereby agrees that their accounting system allows for the separation of fund

sources. Funding provided under this Sub-recipient Grant Agreement cannot be commingled with funds from other federal, state, or local agencies, and each project must be accounted for separately.

H. The sub-recipient hereby agrees that it shall comply with applicable Federal Civil Rights Laws and Regulations: Title VI of the Civil Rights Act of 1964, Section 504 of the Rehabilitation Act of 1973, Title IX of the Education Amendments of 1972, Age Discrimination Act of 1975, and Americans with Disabilities Act of 1991. The sub-recipient will take reasonable steps to ensure Limited English Proficient (LEP) persons have meaningful access to its programs and activities. Executive Order 13379 Individuals with Disabilities in Emergency Preparedness, requires the government to support safety and security for individuals with disabilities in situations involving disasters, including earthquakes, tornadoes, fires, floods, hurricanes, and acts of terrorism.

I. The sub-recipient hereby certifies that for its employees, it has an Affirmative Action Plan/Equal Employment Opportunity Plan (EEOP) if not exempted by the Federal Government or New Mexico rule or statute. An EEOP is not required for sub-recipients of less than $25,000 or fewer than 50 employees.

J. The sub-recipient hereby certifies that its employees are eligible to work in the United States as verified by Form I–9, Immigration & Naturalization Service Employment Eligibility.

K. The sub-recipient hereby agrees that it is the responsibility of the sub-recipient to fully understand and comply with the requirements of the following, where such requirements apply to the sub-recipient set forth in:

1. 2 C.F.R. § 200: Code of Federal Regulations
2. 44 C.F.R. parts 7, 9, 10, 13, 14, 17, 18, 25, 206, 220, 221, 44 C.F.R. Part 209, 2 C.F.R. Part 200 and any other applicable FEMA policy memoranda and guidance documents
3. FEMA Hazard Mitigation Assistance Program and Policy Guide
4. New Mexico State Procurement Code
   New Mexico Administrative Code Title 2 – Public Finance https://www.srca.nm.gov/nmac-home/nmac-titles/title-2-public-finance/

ARTICLE 2: REIMBURSEMENT OF FUNDS

The NMDHSEM will apply the following procedures for making payments to sub-recipients:

A. Payment of Funds, General: Once FEMA has obligated funds and NMDHSEM has budgeted and encumbered those funds, the Cabinet Secretary is authorized to advance funds, as permissible, and to consider requests for payments for progress and completion based on proper review and approvals, in accordance with the sub-grant agreement or amendment as described below. Review and audit of expending and accounting of federal awards and state funds will be conducted to ensure records, reports, and documentation for compliance and tracing of funds are accounted for; 2 C.F.R. §§ 200.302(b)(6), 200.305(a). The State Department of Finance and Administration (DFA) may require additional supporting data and documents prior to disbursement of funds.

B. Reimbursement shall be based upon authorized and allowable expenditures consistent with the project narrative, grant guidelines, and timely submission of Financial and Performance Progress Reports. Reimbursement of expenditures shall be requested quarterly or monthly if need be for expenditures within the performance period. A minimum of 25% (of the total project cost) in the non-federal match must be included on each request for reimbursement. All expenditures must be supported with source documentation (e.g., copies of proof of payment, invoices, receipts, timesheets

with name/rate/hours and certified, breakdown of expenditures based on FEMA approved budget, warrants, a brief description of work done, required deliverables, etc.). Request for reimbursement will not be processed if quarterly financial or performance reports are delinquent. The final payment of 15% will not be made until DHSEM verifies that all activities are complete. All payments shall be made on an actual cost reimbursement basis.

C. Contracts: All requests for proposals/bids, sole–source procurements, single vendor responses to a competitive bid, and contracts require DHSEM pre–approval prior to implementation. The relevant contract must accompany requests for reimbursement for contractual services.

D. Local Match: Local matching funds must clearly support the source, the amount, and the timing of all matching contributions. When requesting reimbursement, the match percentage must be shown on each invoice. Copies of proof of payment, invoices, receipts, purchase orders, timesheets with name/wage/hours, cost allocation, general ledger, warrants, etc., must be submitted as a backup for the match.

E. Non-reimbursable Expenses:

- Transfer of funds between any programs. Contracts, single vendor response to a competitive bid, sole source contracts, and any procurement documentation not pre-approved by DHSEM.
- Training and related travel costs not pre-approved by DHSEM.
- Supplanting (using federal funds to purchase items previously budgeted for with state or local funds).
- Maintenance and/or wear and tear costs of general use vehicles and emergency response apparatus.
- Equipment purchased for an exercise cannot be used for permanent installation and/or beyond the scope of an exercise.
- Weapons and ammunition.
- Entertainment and sporting events
- Personal items such as laundry, personal hygiene items, magazines, in-room movies, personal travel, and personal phone calls.
- Travel insurance, visa, and passport charges.
- Lodging costs in excess of State per diem, as appropriate.
- Lunch when travel is wholly within a single day.
- Standalone working meals.
- Bar charges, alcoholic beverages.
- Finance, late fees, or interest charges.
- Lobbying, political contributions, and legislative liaison activities.
- Organized fundraising, including salaries of persons while engaged in these activities.
- Expenditures not supported with appropriate documentation when submitted for reimbursement. Only properly documented expenditures will be processed for payment. Unsupported expenditures will be returned to the jurisdiction for resubmission.

F. **Payment Conditions.** The sub-recipient must certify that in requesting and accepting a sub-grant payment, they have spent those funds on eligible expenditures; that the work performed was within the scope of work allowed for specific projects; and that all records pertinent to specific projects will be retained for at least the periods required under record retention regulation requirements from the closeout of the last project. The period of record retention for grant and financial data is three years if state funds are paid.

G. **Delays and Denial of Payment.** Reasons for delays in FEMA processing of payment requests include, but are not limited to, the following:

- Vendor identification number is missing or incorrect;
- Disaster and project number is missing;
- Period of performance (POP) listed is incorrect;
- Service delivery dates do not agree with invoices or outside of contract period;
- Dollar amount on forms do not agree;
- Mathematical errors;
- Full address of sub-grantee is not included;
- Sub-recipient did not provide required back-up documentation; or

Reasons for NMDHSEM declining payment requests include, but are not limited to, the following:

- The POP has expired;
- The amount exceeds the remaining funding available for disbursement prior to the final financial and program compliance reviews (the hold or funding retention amount);
- Request for payment requires a state and/or budget amendment, and cannot be processed until the amendment request is received/approved;
- The reimbursement requested is for an activity outside of the approved scope of work;
- Forms are not signed by an authorized person, or are signed by only one signatory;
- Reimbursement of awarded funds have been suspended due to a non-compliance issue such as failure to submit quarterly reports; or
- Reimbursements of awarded funds have been suspended due to noncompliance activities.

Sub-recipients can reduce the likelihood of delays in processing of payment requests by checking for accuracy prior to submission.

ARTICLE 3: AUDITING AND REPORTING REQUIREMENTS

A. Quarterly Reports. In accordance with 2 C.F.R. § 200.328, the Applicant shall submit quarterly reports to the NMDHSEM beginning with the first full quarter after the signature date on the Sub-recipient Grant Agreement. The NMDHSEM will provide sub-recipient a form for this report. Quarterly reports are due no later than the 15th of the month following the end of the quarter - January 15, April 15, July 15, and October 15.

In order that NMDHSEM may adequately evaluate the progress and status of each sub-grant, quarterly reports shall contain a description of the work accomplished to date, the methods and procedures used, the anticipated completion date, a summary of all project costs to date, and other such information as may be of assistance in its evaluation of the project.

Reports shall be sent to the Department of Homeland Security & Emergency Management, Recovery Unit, P.O. Box 27111, Santa Fe, NM 87502, or electronically to DHSEM.mitigation@dhsem.nm.gov.

B. Additional Reporting Requirements. The sub-recipient must immediately report in writing to the NMDHSEM Mitigation Unit any alleged acts or allegations of fraud or misappropriation of funds for work authorized under this Sub-recipient Grant Agreement. This extends to reporting any legal action, lawsuit, bankruptcy, or other action that may jeopardize the successful completion of any authorized project. Additional reporting and financial reconciliation requirements may also be requested at NMDHSEM and FEMA's request. Failure to comply with these requests may jeopardize funding and may be a breach of this Sub-recipient Grant Agreement.

C. Enforcement. The NMDHSEM may suspend drawdowns, impose other special conditions, or take other authorized action pursuant to 2 C.F.R. § 200.339 (Remedies for Noncompliance) if the sub-recipient does not submit accurate and timely reports. This may include, among other things, the

administrative closeout of a grant and/or any projects under a grant when the sub-recipient is not responsive to reasonable efforts NMDHSEM makes to collect required reports needed to complete closeout. Administrative closeout is a unilateral mechanism by NMDHSEM to move forward with project or grant closeout using available grant information in lieu of final reports. This can require NMDHSEM to make cash or cost adjustments and ineligible cost determinations, which may result in identifying a debt owed to FEMA and/or NMDHSEM.

D. Financial Procedures. The sub-recipient agrees to maintain financial procedures and support documents and to establish and maintain a proper accounting system to record expenditures of disaster assistance funds in accordance with generally accepted accounting principles or as directed by the Governor's Authorized Representative, to account for the receipt and expenditure of funds under this Agreement. If applicable, RECIPIENT / SUBGRANTEE shall conduct audit(s) pursuant to the Single Audit Act of 1984, 31 U.S.C. § 7501 et. seq., 44 C.F.R. Part 14, 2 C.F.R. Part 200, 0MB Circular A-133, "Audits of States, Local Governments, and Non-profit Organizations," and applicable New Mexico laws, rules and regulations. Further, sub-recipient must provide a hard copy of the Single Audit Report within sixty (60) days of the close of its fiscal year. Otherwise, pursuant to 44 C.F.R. § 13.43, NMDHSEM may withhold or suspend payments under any grant award.

The sub-recipient shall retain all financial records, supporting documents, statistical records, and any other documents pertinent to this contract for a period of five years after the date of submission of the final expenditures report. However, if litigation or an audit has been initiated prior to the expiration of the three-year period, the records shall be retained until the litigation or audit findings have been resolved.

E. Authorizing Statute. This award is made under the provisions of the Robert T. Stafford Disaster Relief and Emergency Assistance Act, Pub. L. No. 93-288 (1974) (codified as amended at 42 U.S.C. §§ 5121-5207) (Stafford Act), in accordance with 44 C.F.R. § 206.44.
All scopes of work and costs approved as a result of this Sub-recipient Grant Agreement, whether as estimates or final costs approved through subawards, PWs, or otherwise, will incorporate by reference the terms of this Sub-recipient Grant Agreement and must comply with applicable laws, regulations, policy, and guidance in accordance with this Sub-recipient Grant Agreement.

Pursuant to Executive Order 13858 Strengthening Buy-American Preferences for Infrastructure Projects, FEMA encourages recipients to use, to the greatest extent practicable and consistent with the law, iron and aluminum as well as steel, cement, and other manufactured products produced in the United States in Public Assistance and HMGP eligible public infrastructure repair and construction projects affecting surface transportation, ports, water resources including sewer and drinking water, and power. Such preference must be consistent with the law, including cost and contracting requirements at 2 C.F.R. Part 200.

F. Additional Terms and Conditions. The following additional sub-grant agreement documents are fully incorporated into this Sub-recipient Grant Agreement and thereby constitute additional terms and conditions of this agreement.

- The Stafford Act, its implementing regulations contained in Title 44 of the C.F.R., and FEMA policy and guidance.
- **Hazard Mitigation Assistance Guide (March 2023)**
- The Uniform Administrative Requirements, Cost Principles, and Audit Requirements for Federal Awards set forth at 2 C.F.R. Parts 200 and 3002.
- Attachment 1 United States Department of Homeland Security (USDHS) Standard Terms and Conditions (January 24, 2022) in effect on the date of the Declaration which are incorporated by reference into this Sub-recipient Grant Agreement

- Attachment 2 Reimbursement Checklist
- Attachment 3 Glossary and Definitions
- Attachment 4 Acronyms

ARTICLE 4: SCOPE OF WORK

A. As authorized by the Robert T. Stafford Disaster Relief and Emergency Assistance Act (the Stafford Act), as amended (42 U.S.C. § 5121 et seq.), and Section 662 of the Post Katrina Emergency Reform Act of 2006, as amended (6 U.S.C. § 762), the **City of Santa Fe** has been awarded funds for the Hazard Mitigation Plan Update and Wildlife Risk Assessment Project. Funds shall be utilized as outlined in the approved budget as awarded by FEMA on **July 23,2024**. The Sub Recipient shall match the Federal Award Amount of **$124,574.82** with a local jurisdictional amount of **$38,934.25** for a total project cost of **$163,509.07**. All work performed pursuant to this agreement must comply with the approved FEMA application. All work must be completed within the performance period, between **July23,2024 – November 14,2027.** The **City of Santa Fe** shall not sub-grant any part of this award to any other entity or organization. Within the first reporting quarter, all awards require confirmation that expenditures in the budget category toward this project will be made. If not, DHSEM may execute a de-obligation of Federal funds without recourse by the **City of Santa Fe.**

B. Approved projects must commence within the first reporting quarter. If a project cannot commence and be operational within the first reporting quarter of the approved award date, the sub–Recipient must submit a written statement to DHSEM, signed by the sub-recipient signatory officials, justifying the delay in implementation, the expected starting date, and a formal request to extend the project start date past the first reporting quarter. At the sole discretion of DHSEM, the grant award is subject to cancellation, and funds may be de-obligated and reallocated to other projects.

ARTICLE 5: PUBLICATIONS

A. Publications created with funding under this grant shall prominently contain the following statement or a DHSEM pre-approved modification: **This Document was prepared under a sub-grant from the FEDERAL EMERGENCY MANAGEMENT AGENCY, and the NEW MEXICO DEPARTMENT OF HOMELAND SECURITY AND EMERGENCY MANAGEMENT. Points of view or opinions expressed in this document are those of the authors and do not necessarily represent the official position or policies of the Federal Emergency Management Agency and the New Mexico Department of Homeland Security and Emergency Management.**

ARTICLE 6: PERFORMANCE PERIODS

The performance period for this sub-grant award is **July 23,2024 – November 14,2027.** Further, all personnel-related grant activity must be completed between **July 23,2024 – November 14,2027.** Funds may not be obligated outside of these time periods. An obligation occurs when funds are encumbered, as with a purchase order and/or commitment of salaries and benefits**. All obligated and encumbered funds *must be liquidated* within 45 days of the end of the performance period when the *Final Progress and Financial Reports* are due**.

ARTICLE 7: RECOVERY OF FUNDS FOR DUPLICATION OF BENEFITS AND INELIGIBLE ACTIVITIES

A. Ineligible Activities. The FEMA and/or NMDHSEM may disallow costs and recover funds based on the results of audit or review during or after performance of the award to ensure compliance with the terms of the Sub-recipient Grant Agreement and award document. The FEMA and/or NMDHSEM is required to recover funds when the sub-recipient has ineligible underruns (for example, actual costs for a PA large project are less than the amount awarded based on initial estimates); knowingly or negligently withholds

or misrepresents material information; fails to complete work and comply with the terms of this Sub-recipient Grant Agreement or the approved award; expends federal funds in error; or incurs costs that are unreasonable or otherwise disallowed. If, after exhaustion of appeal rights, FEMA and/or NMDHSEM determines a debt is owed, the State has 30 days to resolve the amount owed before the debt is referred to the FEMA Finance Center for collection. The State may do so by directly paying FEMA. The State may also deposit the amount owed directly into the applicable subaccount in U.S. Health and Human Services (HHS)/Smartlink and notify FEMA when it has reimbursed that subaccount, after which FEMA will de-obligate that amount in the subaccount. Alternatively, the sub-recipient may request to substitute unallowable costs for other costs that are allowable (e.g., necessary, allocable, and reasonable under the same award and have not yet been reimbursed by FEMA).

B. Duplication of Benefits. In accordance with the provisions of 42 U.S.C. § 5155 (Section 312 of the Stafford Act), duplication of benefits is prohibited. The NMDHSEM must take all actions necessary and reasonable to ensure that all who receive federal assistance are aware of their responsibility to repay federal assistance that is duplicated by amounts available from insurance or any other source for the same purpose. The FEMA and/or NMDHSEM may at any time, pre-award or post-award, adjust the level of funding provided to account for financial assistance provided from any other source for the same purpose as the federal assistance or to account for benefits available for the same purpose from another source, irrespective of whether they are actually received. The sub-recipient shall notify NMDHSEM, as soon as practicable, of the existence of any insurance coverage for the costs identified in the application and of any entitlement to or recovery of funds from any other source for the project costs, including Small Business Administration funding, United States Department of Agriculture (USDA), and other Federal, State, and private funding. The amount of duplicate sources available shall reduce allowable costs. The sub-recipient shall be liable to NMDHSEM to the extent that the sub-recipient receives duplicate benefits from any other source for the same purposes for which the sub-recipient has received payment from the NMDHSEM.

C. Cooperation. The NMDHSEM agrees, on its behalf and on behalf of its political subdivisions and others that receive federal assistance, to cooperate with the Federal Government in seeking recovery of federal assistance against any party or parties whose intentional acts or omissions or whose negligence or other tortious conduct may have caused or contributed to the damage or hardship for which federal assistance was provided under this Sub-recipient Grant Agreement. If applicable, FEMA will treat recovered funds as duplicated benefits available to NMDHSEM/sub-recipient in accordance with Section 312 of the Stafford Act (codified as amended at 42 U.S.C. § 5155).

D. NMDHSEM Responsibilities. The NMDHSEM is responsible for recovering federal assistance expended in error, misrepresentation, fraud, or for costs otherwise disallowed or unused.

a. The NMDHSEM must notify FEMA of any potential debt as a result of federal funds expended in error, misrepresentation, fraud, or for costs otherwise disallowed or unused.

b. The NMDHSEM must report all cases of suspected fraud to the USDHS Office of Inspector General. The NMDHSEM must cooperate with any investigation conducted by the USDHS Office of Inspector General. The NMDHSEM must cooperate with FEMA regarding any and all lawsuits that may result from the NMDHSEM or FEMA's attempt to recover funds or disallow costs.

E. Statute of Limitations. The 3-year statute of limitations limiting FEMA's ability to initiate an administrative action to recover funds paid as provided for in Section 705(a) of the Stafford Act (codified as amended at 42 U.S.C. § 5205(a)) begins with:

a. Initiation of an Administrative Action to Recover Payment. The initiation of an administrative action to recover payment includes FEMA's written notice to the NMDHSEM or a sub-recipient of a questioned or disallowed cost or improper payment (including a request for information

concerning such cost or payment) and written notice to the NMDHSEM or a sub-recipient of a FEMA or 3rd party review or audit.

F. Refunds, Rebates, and Credits. The NMDHSEM must transfer to FEMA the appropriate share, based on the federal support percentage, of any refund, rebate, credit or other amounts arising from the performance of this Sub-recipient Grant Agreement. The NMDHSEM must take necessary action to promptly collect all monies due or which may become due and if applicable, to cooperate with the Federal Government in any claim or suit in connection with amounts due.

G. Non-Compliant Sub-recipients. As per 2 C.F.R. §§ 200.207, 200.303(d) and 200.338(A-F), NMDHSEM can selectively use any or all the following remedies and prompt actions for non-compliance with any term of an award to include audit finding(s):

- **a.** Increased monitoring of projects and require additional financial and performance reports.
- **b.** Disallow advance payment process.
- **c.** Temporarily withhold payments pending correction of the deficiency.
- **d.** Disallow or deny use of funds and matching credit for all or part of the cost of the activity or action not in compliance.
- **e.** Request FEMA to completely or partially de-obligate funding for a project.
- **f.** Temporarily withhold payments pending correction of the deficiency by the sub-recipient.
- **g.** Withhold further awards for the grant program.
- **h.** Take other programmatic or legally available remedies.

ARTICLE 8: CONSTRUCTION REQUIREMENTS

A. The NMDHSEM must ensure that all applicable federal, state, and local permits and approvals are obtained, and all permit conditions are addressed before the start of any construction activity, including FEMA and NMDHSEM/sub-recipient compliance with the National Environmental Policy Act, the National Historic Preservation Act, the Endangered Species Act, and all other applicable environmental laws and executive orders. All construction should be in accordance with approved permits, projects plans and specifications, applicable building codes, and program guidance.

ARTICLE 9: NATIONAL ENVIRONMENTAL POLICY ACT (NEPA)/ENVIRONMENTAL PLANNING AND HISTORIC PRESERVATION (EHP) COMPLIANCE

A. The sub-recipient must provide information to FEMA the legally required environmental planning and historic preservation (EHP) review and to ensure compliance with the applicable EHP laws and Executive Orders (EO). These EHP requirements include but are not limited to National Environmental Policy Act, National Historic Preservation Act, Endangered Species Act, E 11988 Floodplain Management, EO 11990 Protection of Wetlands, and EO 12898 Environmental Justice. The sub-recipient must comply with all federal, state, local, tribal, and territorial EHP requirements and obtain applicable permits and clearances.

B. Sub-recipients shall not undertake any activity from the project that would result in ground disturbance, facility modification, or relates to the use of sonar equipment without the prior approval of FEMA. These include but are not limited to communications towers, physical security enhancements involving ground disturbance, new construction, and modifications to buildings that are 50 years old or older, and exercises. The sub-recipient must comply with all mitigation or treatment measures required for the project as the result of FEMA's EHP review. An EHP Screening Form does not need to be provided for those exercises that are planned to take place at previously approved facilities, such as, fire and police academies, search and rescue training facilities, and explosive testing centers. Any type of exercise that requires any type of land, water, or vegetation disturbance or building of temporary structures must undergo an EHP review.

C. Any change to an approved project description will require re-evaluation for compliance with EHP requirements before the project can proceed. If ground disturbing activities occur during project implementation, the sub-recipient must ensure monitoring of ground disturbance and if any potential archeological resources are discovered, the sub-recipient will immediately cease construction in that area and notify NMDHSEM, FEMA and the New Mexico Historic Preservation Division. Initiation of these activities prior to completion of FEMA's EHP review will result in a non-compliance finding and may result in ineligibility of grant funding.

ARTICLE 10: PROPERTY AND EQUIPMENT MANAGEMENT

A. The sub-recipient will follow the property standards articulated in 2 C.F.R. § 200.310 through 2 CFR 200.326. The sub-recipient shall, when practical, prominently display the following on any equipment purchased with award funds: **PURCHASED WITH FUNDS PROVIDED BY THE FEDERAL EMERGENCY MANAGEMENT AGENCY.** No equipment purchased with these grant funds may be assigned to other entities or organizations without the expressed approval in writing from DHSEM prior to the jurisdiction's encumbrance or expenditure for that equipment.

B. The subrecipient will follow the property standards articulated in 2 C.F.R. § 200.310 through 2 C.F.R. § 200.326. The subrecipient shall maintain an effective property management system; safeguards to prevent loss, damage or theft; maintenance procedures to keep equipment in good condition; and disposition procedures. A Property Inventory Report shall be submitted to NMDHSEM annually each January 30 with the Financial Progress Report during the performance period, and continued submission is required annually until final disposition of the equipment. The subrecipient shall, when practical, prominently display the following on any equipment purchased with award funds: Purchased with funds provided by the U.S. Department of Homeland Security. No equipment purchased with these grant funds may be assigned to other entities or organizations without the expressed approval in writing from NMDHSEM, prior to the jurisdiction's encumbrance or expenditure for that equipment.

C. Any disposition of property or equipment must be in accordance with 2 C.F.R. § 200.313(e) and pre-approved by FEMA through NMDHSEM.

ARTICLE 11: SUBRECIPIENT MONITORING POLICY

A. In accordance with 2 C.F.R. § 200.328, NMDHSEM may periodically monitor a sub-recipient's projects to ensure that program goals, objectives, timelines, budgets, and other related program criteria are being met. The NMDHSEM reserves the right to periodically review and conduct analysis of the sub-recipient's financial, programmatic, and administrative policies and procedures. This monitoring may include review of accounting for receipts and expenditures, cash management, maintaining adequate financial records, means of allocating and tracking costs, contracting, procurement, records management, payroll, means of allocating staff costs, property and equipment management system, progress of project activities, etc. This may include unscheduled desk audits and field inspections. The sub-recipient shall accommodate all such requests within reason. If the sub-recipient encounters any unanticipated problem with the Scope of Work, allowed costs, procurement, permitting, or other difficulty, the sub-recipient must communicate that problem to NMDHSEM promptly. Work on affected projects must be suspended until the problem is resolved. Technical assistance is available from NMDHSEM staff.

B. The sub-recipient will immediately, no later than 24-hours upon notice, report to NMDHSEM allegations of wrong-doing on the part of any contractor, sub-contractor, agent or employee of the sub-recipient, or other interested party in reference to the work authorized under this Sub-recipient Grant Agreement. This extends to any legal action, lawsuit, bankruptcy, or other action that may jeopardize the successful completion of any authorized project.

ARTICLE 12: PROCUREMENT

A. Procurement shall comply with all federal, state, and local procurement requirements including 2 C.F.R. § 200.320 and the New Mexico Procurement Code for expenditure of funds under this Agreement. The Applicant must conform to applicable state and federal law and the Procurement Standards Sections 2 C.F.R. § 200.317-326, and Appendix II. Contractors that develop or draft specifications, requirements, Statements of Work, and/or Requests for Proposals (RFP) for a proposed procurement shall be excluded from bidding or submitting a proposal to compete for the award of such procurement. Local bidder's preference is not allowed for federally funded procurements. Procurement transactions shall be conducted to provide maximum open and free competition.

B. When procuring property and services under this agreement, the sub-recipient will follow 2 C.F.R. § 200.318 through 2 C.F.R. § 200.326 and Appendix II. The sub-recipient must use its own documented procurement procedures which reflect applicable state, local, tribal, and territorial laws, and regulations, provided that the procurements conform to applicable federal law and the standards identified in 2 C.F.R. § 200. As such, the sub-recipient must use one of the methods of procurement identified in 2 C.F.R. § 200.320.

C. Also, per 2 C.F.R. § 200.318(i), subrecipients are required to maintain and retain records sufficient to detail the history of procurement covering at least the rationale for the procurement method, selection of contract type, contractor selection or rejection, and the basis for the contract price. States and territories are encouraged to maintain and retain this information as well and are reminded that in order for any cost to be allowable, it must be adequately documented per 2 C.F.R. § 200.403(g). Examples of the types of documents that would cover this information include but are not limited to:

- **a.** Solicitation documentation, such as requests for quotes, invitations for bids, or requests for proposals;
- **b.** Responses to solicitations, such as quotes, bids, or proposals;
- **c.** Pre-solicitation independent cost estimates and post-solicitation cost/price analyses on file for review by federal personnel, if applicable;
- **d.** Contract documents and amendments, including required contract provisions; and
- **e.** Other documents required by federal regulations applicable at the time a subgrant is awarded to a subrecipient.

D. Procurement from Minority Owned and Women Owned Business is encouraged and must be tracked and reported to NMDHSEM on the quarterly reports. Procurement transactions shall be conducted to provide maximum open and free competition. Each sole–source procurement single vendor response to a competitive bid, and all purchases require prior approval of NMDHSEM.

E. The sub-recipient will follow the property standards articulated in 2 C.F.R. § 200.310 through 2 C.F.R. § 200.326. The sub-recipient shall maintain an effective property management system; safeguards to prevent loss, damage or theft; maintenance procedures to keep equipment in good condition; and disposition procedures. Property and equipment records shall be maintained for a period of three years following the final disposition, replacement or transfer of the property and equipment.

ARTICLE 13: CONTRACTS

A. Contractors that develop or draft specifications, requirements, Statements of Work, and/or Requests for Proposals (RFP) for a proposed procurement shall be excluded from bidding or submitting a proposal to compete for the award of such procurement. Local bidder's preference is not allowed for federally funded procurements. Procurement transactions shall be conducted to provide maximum open and free

competition. Each sole–source procurement, single vendor response to a competitive bid, and all purchases require prior approval of DHSEM.

B. Any contract shall comply with the requirements of Procurement Standards Sections of 28 C.F.R. Parts 66 and 70, 2 C.F.R. Part 200 and OMB Circulars A–102 "Uniform Administrative Requirements for Grants and Cooperative Agreements with State and Local Governments" for expenditure of Federal funds under this Sub-recipient Grant Agreement. Applicants shall submit procurement and contracts to NMDHSEM for review prior to approval. Contracts for professional services must meet applicable local, state, and federal requirements. All contractors must be licensed in New Mexico for the type of work that is required. Prior to any contracted work beginning, the sub-recipient shall provide NMDHSEM with a copy of the contractor's license. Contract work must not exceed the scope of work and PW awarded amount prescribed by FEMA, unless requested through a scope of work change and approval from FEMA.

C. Any contract entered during this sub-grant period shall comply with local, State, and Federal government contracting regulations. Professional and consultant services contracts must include local, State, and Federal government-required contract language, a project budget, SOW, and a pay schedule. ***All contracts require pre-approval by DHSEM prior to execution.*** Contract deliverables must meet the intent of the grant application and grant requirements. Justification is required for compensation for individual consultant services, which must be reasonable and consistent with the amount paid for similar services in the marketplace. Detailed invoices and time and effort reports are required for consultants.

ARTICLE 14: COMPETITION AND CONFLICTS OF INTEREST

A. Among the requirements of 2 C.F.R. § 200.319(b) applicable to all non-federal entities other than states, in order to ensure objective contractor performance and eliminate unfair competitive advantage, contractors that develop or draft specifications, requirements, statements of work, or invitations for bids or requests for proposals must be excluded from competing for such procurements. The FEMA considers these actions to be an organizational conflict of interest and interprets this restriction as applying to contractors that help a subrecipient develop its grant application, project plans or project budget. This prohibition also applies to the use of former employees to manage the grant or carry out a contract when those former employees worked on such activities while they were employees of the non-federal entity.

B. Under this prohibition, unless the subrecipient solicits for and awards a contract covering both development and execution of specifications (or similar elements as described above), and this contract was procured in compliance with 2 C.F.R. §§ 200.317 – 200.327, federal funds cannot be used to pay a contractor to carry out the work if that contractor also worked on the development of those specifications. This rule applies to all contracts funded with federal grant funds, including pre-award costs, such as grant writer fees, as well as post-award costs, such as grant management fees. Additionally, some of the situations considered to be restrictive of competition include, but are not limited to:

- **a.** Placing unreasonable requirements on firms for them to qualify to do business;
- **b.** Requiring unnecessary experience and excessive bonding;
- **c.** Noncompetitive pricing practices between firms or between affiliated companies;
- **d.** Noncompetitive contracts to consultants that are on retainer contracts;
- **e.** Organizational conflicts of interest;
- **f.** Specifying only a "brand name" product instead of allowing "an equal" product to be offered and describing the performance or other relevant requirements of the procurement; and
- **g.** Any arbitrary action in the procurement process.

C. Per 2 C.F.R. § 200.319(c), the subrecipient must conduct procurements in a manner that prohibits the use of statutorily or administratively imposed state, local, tribal, or territorial geographical preferences in the evaluation of bids or proposals, except in those cases where applicable federal statutes expressly mandate or encourage geographic preference. Nothing in this section preempts state licensing laws. **When**

contracting for architectural and engineering services, geographic location may be a selection criterion, provided its application leaves an appropriate number of qualified firms, given the nature and size of the project, to compete for the contract.

D. Under 2 C.F.R. § 200.318(c)(1), the subrecipient is required to maintain written standards of conduct covering conflicts of interest and governing the actions of their employees engaged in the selection, award, and administration of contracts. **No employee, officer, or agent may participate in the selection, award, or administration of a contract supported by a federal award if he or she has a real or apparent conflict of interest.** Such conflicts of interest would arise when the employee, officer or agent, any member of his or her immediate family, his or her partner, or an organization that employs or is about to employ any of the parties indicated herein, has a financial or other interest in or a tangible personal benefit from a firm considered for a contract. The non-federal entity's officers, employees, and agents may neither solicit nor accept gratuities, favors, or anything of monetary value from contractors or parties to subcontracts. However, subrecipient entities may set standards for situations in which the financial interest is not substantial, or the gift is an unsolicited item of nominal value. The standards of conduct must provide for disciplinary actions to be applied for violations of such standards by officers, employees, or agents of the non-federal entity.

E. Under 2 C.F.R. § 200.318(c)(2), if the subrecipient has a parent, affiliate, or subsidiary organization that is not a state, local, tribal or territorial government, the subrecipient must also maintain written standards of conduct covering organizational conflicts of interest. In this context, organizational conflict of interest means that because of a relationship with a parent company, affiliate, or subsidiary organization, the subrecipient is unable or appears to be unable to be impartial in conducting a procurement action involving a related organization. The non-federal entity must disclose in writing any potential conflicts of interest to FEMA or NMDHSEM in accordance with applicable FEMA policy.

ARTICLE 15: CONTRACTS

A. Contracts for professional and consultant services executed during this grant period must include federal, state, local, tribal, and territorial government required contract language, a project budget, and require pre-approval by NMDHSEM prior to implementation. Contract deliverables must meet the intent of the grant application and grant requirements. Justification is required for compensation for individual consultant services, which must be reasonable and consistent with the amount paid for similar services in the marketplace. Detailed invoices and time and effort reports are required for consultants. *See* 2 C.F.R. § 200.1, 2 C.F.R. § 200 Appendix II to Part 200.

ARTICLE 16: AUDIT REQUIREMENTS

A. As a federal grant recipient, the State of New Mexico requires a sub-recipient expending $750,000 or more in federal funds in the organization's fiscal year to conduct an organization–wide audit in accordance with the Single Audit described in 2 C.F.R. § 200.501. The sub-recipient will permit state or federal officials and auditors to have access to sub-recipient and contractor records and financial statements as necessary for the state to comply with 2 C.F.R. § 200.501. Copies of audit findings must be submitted to NMDHSEM within 30 days after the sub-recipient receives its audit report, or within a 9-month period of the grant closeout date, whichever is earlier. Include the federal agency name, program, grant number, the CFDA title and number, and the name of the pass-through agency (NMDHSEM) in all documents.

ARTICLE 17: RECORDS RETENTION

A. Records Retention.

a. **State Requirement.** The State must retain records for three years after all projects are complete and the federal disaster is formally closed out, except in certain rare circumstances described in 2 C.F.R. § 200.334 (Retention requirements for records), from the date it submits the final Federal Financial Report (SF-425) to FEMA in compliance with 2 C.F.R. § 200.334. If FEMA administratively closes the grant where no final SF-425 was submitted, FEMA uses the date the grant was administratively closed as the start date for the three-year record retention period.

b. **Sub-recipient Requirement.** The sub-recipients must retain project or subaward records for at least three years from the date that the NMDHSEM submits to FEMA the final expenditure report for a project or subaward. If, however, there is any litigation, claim, negotiation, audit, request for information, or other action involving the project or subaward that starts before that date, the records must be retained until completion of the action and resolution of all issues which arise from it, or until the end of the three-year period, whichever is later.

c. The sub-recipient will follow the record retention and access standards articulated in 2 C.F.R. § 200.333 through 2 C.F.R. § 200.337. The grant financial and administrative records shall be maintained for a period of three years following the date of the closure of the grant award, or audit if required. Time and effort, personnel and payroll records for all individuals reimbursed under the award must be maintained. Property and equipment records shall be maintained for a period of three years following the final disposition, replacement or transfer of the property and equipment.

d. The sub-recipient will be required to maintain project records until the expiration of the appropriate retention period. This includes records related to Management Costs, procurement, contracting, accounts payable, engineering, inventory, force account (materials, labor, and equipment), insurance settlements or other records related to the project scope of work. Retention procedures are outlined in the Hazard Mitigation Assistance Grant Programs Administrative Plan.

ARTICLE 18: CHANGES TO AWARD

A. All change requests must be submitted either in writing or electronically to the NMDHSEM contact for review 90 days prior to the termination of this Sub-recipient Grant Agreement. All change requests must be accompanied by a justification narrative and a budget and spending plan. All change requests must be consistent with the scope of the project and grant guidelines. Change requests will be considered only if reporting requirements are current, and all other terms and conditions of this Sub-recipient Grant Agreement have otherwise been met at the time of the request. If approved by NMDHSEM and FEMA, changes in the programmatic activities, purpose of the project, key personnel specified on the grant award, contractual services for activities central to the purposes of the award, change in project site, or release of special conditions, will result in an amendment to this award. Requests for changes must be formally submitted to NMDHSEM and FEMA.

B. Changes to this Sub-recipient Grant Agreement will be made via a Sub-recipient Grant Agreement Amendment. The NMDHSEM will prepare each Amendment when needed. No Sub-recipient Grant Agreement Amendment is valid until fully executed.

ARTICLE 19: REMEDIES FOR NONCOMPLIANCE

A. For the reasons listed below, special conditions may be imposed, reimbursements may be partially or wholly withheld, the award may be wholly or partly suspended or terminated, or future awards, reimbursements and award modifications may be withheld. The NMDHSEM may institute the following, but is not limited to, withholding authority to proceed to the next phase of a project, requiring additional or more detailed

financial reports, additional project monitoring, and/or establish additional prior approvals. The NMDHSEM shall notify the sub-recipient of its decision in writing stating the nature and the reason for imposing the conditions/restrictions, the corrective action required and timeline to remove them, and the method of requesting reconsideration of the imposed conditions/restrictions. The sub-recipient must respond within five days of receipt of notification.

a. Unwillingness or inability to attain project goals or scope of work.
b. Unwillingness or inability to adhere to Special Conditions of this Sub-recipient Grant Agreement.
c. Failure or inability to adhere to grant guidelines and federal compliance requirements.
d. Improper procedures regarding contracts and procurements.
e. Failure to submit reliable and/or timely reports.
f. Fiscal management which does not meet reasonable professional standards.
g. Failure or inability to adhere to the terms and conditions of this Sub-recipient Grant Agreement.
h. Unwillingness or inability to obtain permits required by law to perform the eligible work.
i. Noncompliance with any and all federal, state, local and tribal grant requirements.

B. The NMDHSEM shall notify the sub-recipient of any non-compliance issues in writing and shall attempt to arrive at a resolution in a timely and reasonable fashion. If corrective action is required, NMDHSEM and the sub-recipient shall determine a timeline and landmarks for remediation. The NMDHSEM may require additional detailed financial reports or additional project monitoring. The ultimate penalty for non-compliance with the terms and conditions of this Sub-recipient Grant Agreement is for payments to be withheld or for the award to be suspended or terminated. The sub-recipient agrees to make restitution if necessary.

C. The NMDHSEM may take action as it determines appropriate under the circumstances including but not limited to withholding of payments, disallowance of costs, suspension or termination of the award if the sub-recipient fails to comply with applicable Federal and State statutes, regulations, or the terms of this Sub-recipient Grant Agreement pursuant to 2 C.F.R. § 200.339.

D. Nothing in this section abrogates the sub-recipient's right of appeal.

ARTICLE 20: TERMINATION

A. **For Cause:** In compliance with 2 C.F.R. § Part 200.340(a)(1), if performance is not occurring as agreed, the award may be reduced or terminated without compensation for reduction or termination costs. The NMDHSEM will provide notice of five days to the subrecipient stating the reasons for the action, steps taken to correct the problems, and the commencement date of the reduction or termination. The NMDHSEM will reimburse the subrecipient only for acceptable work or deliverables, necessary and allowable costs incurred through the date of reduction or termination. Final payment may be withheld at the discretion of NMDHSEM until completion of a final NMDHSEM review. Disposition of any equipment acquired under a terminated grant must be in accordance with 2 C.F.R. § 200.313(e).

B. **For Convenience:** In compliance with 2 CFR Part 200.340(a)(4), this Agreement may be terminated without cause by the subrecipient upon written notice setting forth the reasons for such termination, and the effective date at least 30 days prior to the intended date of termination. A termination pursuant to this provision does not nullify a party's obligations for performance, or liabilities for failure to perform already incurred prior to the date of termination. Any project may be terminated upon convenience, in whole or in part, for the convenience of the subrecipient; though a partial termination notification must specify that portion of the project which is to be terminated. Allowable costs obligated and/or incurred through the date of termination shall be reimbursed. Disposition of any equipment acquired under a terminated grant must be in accordance with 2 C.F.R. § 200.313(e).

ARTICLE 21: CLOSEOUT OF SUB-GRANT

A. Closeout of Projects. Per 2 C.F.R. § 200.344, sub-recipients must submit all cost and supporting documentation for completed projects. The NMDHSEM will review and verify all costs and supporting documents to validate compliance. Failure to comply will result in de-obligation of the project. The NMDHSEM will close each sub-recipient file once it has conducted full review and approval of all supporting documents for compliance and all projects are completed and has project activity closed out.

a. Management Costs. Management Costs will be used for internal staff salaries, contractor payments and other support costs associated with this grant. This will be in accordance with all laws, rules, and FEMA regulations. Management Costs will be processed in accordance with the Hazard Mitigation Assistance Program and Policy Guide.

The NMDHSEM commits to closeout of all grants regardless of the availability of management costs.

ARTICLE 22: SPECIAL CONDITIONS

A. The terms of this Sub-recipient Grant Agreement are contingent upon sufficient appropriations and authorizations being made by the USDHS FEMA under the Robert T. Stafford Disaster Relief and Emergency Assistance Act U.S.C. §§ 5121-5207. If sufficient appropriations and authorizations are not made by FEMA this Sub-recipient Grant Agreement shall terminate immediately upon written notice being given by NMDHSEM to the sub-recipient. The decision of NMDHSEM shall be final.

B. If NMDHSEM proposes an Amendment to the Sub-recipient Grant Agreement to unilaterally reduce funding, the sub-recipient shall have the option to terminate the Sub-recipient Grant Agreement or agree to the reduced funding within 30 days of receipt of the proposed Amendment.

C. Each party shall be solely responsible for fiscal or other sanctions occasioned because of its own violation of requirements applicable to the performance of this Sub-recipient Grant Agreement. Each party shall be liable for its own actions or inactions in accordance with state law and nothing herein shall be deemed a waiver, indemnity or to otherwise create or effect liabilities between the parties.

D. The grant award amount is a funding allocation and is not to be interpreted as expenditure authorizations or approvals.

E. All awarded projects must be planned for, conducted, budgeted, and expended within the designated performance period.

F. Quarterly financial and progress reports are due on October 15, January 15, April 15, and July 15, within the POP. Final reports are due 15 days after the end of POP.

G. All revision requests must be reviewed and approved by NMDHSEM staff. All requests must meet the original scope of the project which may result in a sub-recipient grant amendment.

H. A revision of a project's SOW must be pre-approved by NMDHSEM staff before the jurisdiction can proceed with the request for approval process. If the revision is approved, NMDHSEM staff may request additional documentation to proceed with recommendation to NMDHSEM Leadership for final approval.

I. The beneficiary of this award is solely responsible for all expenditures that are incurred outside of the award performance period. All expenditures that are incurred above and beyond the amount of this Sub-recipient Grant Agreement are the sole responsibility of the sub-recipient of this award.

J. Procurement from Minority Owned and Women Owned Business is encouraged and must be tracked and reported to NMDHSEM on the quarterly reports.

K. Upon completion of all awarded projects, any remaining funds will be de-obligated and reverted to NMDHSEM for return to FEMA.

L. Extensions due to exigent or emergency circumstances will be determined by NMDHSEM on a case-by-case basis.

State of New Mexico
Department of Homeland Security & Emergency Management
P.O. Box 27111
Santa Fe, NM 87502

The acceptance of a subgrant from the United States and the State of New Mexico creates a legal duty and obligation on the part of the sub-recipient to use the funds or property made available in accordance with the conditions of the grant as administered by and through the New Mexico Department of Homeland Security and Emergency Management. By signing this obligating award document, the sub-recipient certifies it has read, understood, and accepted these documents as binding.

SUB-RECIPIENT GRANT AGREEMENT
Signatures of Acceptance

SUB-GRANT NO:	**DR-4652-0011-NM**		
JURISDICTION GRANT PROGRAM MANAGER PRINTED NAME:			
OFFICIAL SIGNATURE:		**DATE:**	
CONTACT NUMBER:		**E-MAIL ADDRESS:**	
JURISDICTION CHIEF FINANCIAL OFFICER PRINTED NAME:			
OFFICIAL SIGNATURE:		**Date:**	
CONTACT NUMBER:		**E-MAIL ADDRESS:**	
JURISDICTION SIGNATORY OFFICIAL PRINTED NAME:			
OFFICIAL SIGNATURE:		**DATE:**	
CONTACT NUMBER:		**E-MAIL ADDRESS:**	
NMDHSEM MITIGATION PROGRAM BUREAU CHIEF PRINTED NAME:			
NMDHSEM MITIGATION PROGRAM BUREAU CHIEF OFFICIAL SIGNATURE / DATE:			
NMDHSEM GRANTS MANAGEMENT BUREAU CHIEF PRINTED NAME:			
NMDHSEM GRANTS MANAGEMENT BUREAU CHIEF OFFICIAL SIGNATURE / DATE:			
NMDHSEM DEPUTY CABINET SECRETARY OFFICIAL PRINTED NAME:			
NMDHSEM DEPUTY CABINET SECRETARY OFFICIAL SIGNATURE / DATE:			

Print one original agreement, sign and email to: DHSEM.MITIGATION@DHSEM.nm.gov

CITY OF SANTA FE:

_____
ALAN WEBBER, MAYOR

DATE:_____

ATTEST:

_____
CITY CLERK

CITY ATTORNEY'S OFFICE:

_____
ASSISTANT CITY ATTORNEY

APPROVED FOR FINANCES:

Emily K. Oster 11/01/2024
_____
FINANCE DIRECTOR

The page is intentionally left blank.

ATTACHMENT 1
USDHS Standard Terms and Conditions
(January 24, 2022)

The Fiscal Year (FY) 2022 USDHS Standard Terms and Conditions apply to all new federal financial assistance awards funded in FY 2022. These terms and conditions flow down to sub-recipients unless an award term or condition specifically indicates otherwise. The United States has the right to seek judicial enforcement of these obligations.

All legislation and digital resources are referenced with no digital links. The FY 2022 USDHS Standard Terms and Conditions will be housed on dhs.gov at www.dhs.gov/publication/fy15-dhs- standard-terms-and-conditions.

A. Assurances, Administrative Requirements, Cost Principles, Representations and Certifications

I. USDHS financial assistance recipients must complete either the Office of Management and Budget (OMB) Standard Form 424B Assurances – Non-Construction Programs, or OMB Standard Form 424D Assurances – Construction Programs, as applicable. Certain assurances in these documents may not be applicable to your program, and the USDHS financial assistance office (USDHS FAO) may require applicants to certify additional assurances. Applicants are required to fill out the assurances as instructed by the awarding agency.

II. USDHS financial assistance recipients are required to follow the applicable provisions of the Uniform Administrative Requirements, Cost Principles, and Audit Requirements for Federal Awards located at Title 2, Code of Federal Regulations (C.F.R.) Part 200 and adopted by USDHS at 2 C.F.R. Part 3002.

III. By accepting this Agreement, recipients, and their executives, as defined in 2 C.F.R. § 170.315, certify that their policies are in accordance with OMB's guidance located at 2 C.F.R. Part 200, all applicable federal laws, and relevant Executive guidance.

B. General Acknowledgements and Assurances

All recipients, sub-recipients, successors, transferees, and assignees must acknowledge and agree to comply with applicable provisions governing USDHS access to records, accounts, documents, information, facilities, and staff.

I. Recipients must cooperate with any USDHS compliance reviews or compliance investigations conducted by USDHS.

II. Recipients must give USDHS access to examine and copy records, accounts, and other documents and sources of information related to the federal financial assistance award and permit access to facilities or personnel.

III. Recipients must submit timely, complete, and accurate reports to the appropriate USDHS officials and maintain appropriate backup documentation to support the reports.

IV. Recipients must comply with all other special reporting, data collection, and evaluation requirements, as prescribed by law, or detailed in program guidance.

V. Recipients (as defined in 2 C.F.R. Part 200 and including recipients acting as pass-through entities) of federal financial assistance from USDHS or one of its awarding component agencies must complete the USDHS Civil Rights Evaluation Tool within thirty (30) days of receipt of the Notice of Award for the first award under which this term applies. Recipients of multiple awards of USDHS financial assistance should only submit one completed tool for their organization, not per award. After the initial submission, recipients are required to complete the tool once every two (2) years if they have an active award, not every time an award is made. Recipients should submit the completed tool, including supporting materials, to CivilRightsEvaluation@hq.dhs.gov. This tool clarifies the civil rights obligations and related reporting requirements contained in the USDHS

Standard Terms and Conditions. Sub-recipients are not required to complete and submit this tool to USDHS. The evaluation tool can be found at https://www.dhs.gov/publication/dhs- civil-rights-evaluation-tool.

The USDHS Office for Civil Rights and Civil Liberties will consider, in its discretion, granting an extension if the recipient identifies steps and a timeline for completing the tool. Recipients should request extensions by emailing the request to CivilRightsEvaluation@hq.dhs.gov prior to expiration of the 30-day deadline.

C. Standard Terms & Conditions

I. Acknowledgement of Federal Funding from USDHS

Recipients must acknowledge their use of federal funding when issuing statements, press releases, requests for proposal, bid invitations, and other documents describing projects or programs funded in whole or in part with federal funds.

II. Activities Conducted Abroad

Recipients must ensure that project activities performed outside the United States are coordinated as necessary with appropriate government authorities and that appropriate licenses, permits, or approvals are obtained.

III. Age Discrimination Act of 1975

Recipients must comply with the requirements of the Age Discrimination Act of 1975, Public Law 94-135 (1975) (codified as amended at Title 42, U.S. Code, § 6101 et seq.), which prohibits discrimination on the basis of age in any program or activity receiving federal financial assistance.

IV. Americans with Disabilities Act of 1990

Recipients must comply with the requirements of Titles I, II, and III of the Americans with Disabilities Act, Pub. L. 101-336 (1990) (codified as amended at 42 U.S.C. §§ 12101– 12213), which prohibits recipients from discriminating on the basis of disability in the operation of public entities, public and private transportation systems, places of public accommodation, and certain testing entities.

V. Best Practices for Collection and Use of Personally Identifiable Information

Recipients who collect personally identifiable information (PII) are required to have a publicly available privacy policy that describes standards on the usage and maintenance of the PII they collect. USDHS defines PII as any information that permits the identity of an individual to be directly or indirectly inferred, including any information that is linked or linkable to that individual. Recipients may also find the USDHS Privacy Impact Assessments: Privacy Guidance and Privacy Template as useful resources respectively.

VI. Civil Rights Act of 1964 – Title VI

Recipients must comply with the requirements of Title VI of the Civil Rights Act of 1964 (codified as amended at 42 U.S.C. § 2000d et seq.), which provides that no person in the United States will, on the grounds of race, color, or national origin, be excluded from participation in, be denied the benefits of, or be subjected to discrimination under any program or activity receiving federal financial assistance. USDHS implementing regulations for the Act are found at 6 C.F.R. Part 21 and 44 C.F.R. Part 7.

VII. Civil Rights Act of 1968

Recipients must comply with Title VIII of the Civil Rights Act of 1968, Pub. L. 90-284, as amended through Pub. L. 113-4, which prohibits recipients from discriminating in the sale, rental, financing, and advertising of dwellings, or in the provision of services in connection therewith, on the basis of race, color, national origin, religion, disability, familial status, and sex (see 42 U.S.C. § 3601 et seq.), as implemented by the U.S. Department of Housing and Urban Development at 24 C.F.R. Part 100. The prohibition on disability discrimination includes the requirement that new multifamily housing with four or more dwelling units—i.e., the public and common use areas and individual apartment units (all units in buildings with elevators and ground-floor units in buildings without elevators)—be designed and constructed with certain accessible features. (See 24 C.F.R. Part 100, Subpart D.)

VIII. Copyright

Recipients must affix the applicable copyright notices of 17 U.S.C. §§ 401 or 402 and an acknowledgement of U.S. Government sponsorship (including the award number) to any work first produced under federal financial assistance awards.

IX. Debarment and Suspension

Recipients are subject to the non-procurement debarment and suspension regulations implementing Executive Orders (E.O.) 12549 and 12689, which are at 2 C.F.R. Part 180 as adopted by USDHS at 2 C.F.R. Part 3002. These regulations restrict federal financial assistance awards, subawards, and contracts with certain parties that are debarred, suspended, or otherwise excluded from or ineligible for participation in federal assistance programs or activities.

X. Drug-Free Workplace Regulations

Recipients must comply with drug-free workplace requirements in Subpart B (or Subpart C, if the recipient is an individual) of 2 C.F.R. Part 3001, which adopts the Government-wide implementation (2 C.F.R. Part 182) of Sec. 5152-5158 of the Drug-Free Workplace Act of 1988 (41 U.S.C. §§ 8101-8106).

XI. Duplication of Benefits

Any cost allocable to a particular federal financial assistance award provided for in 2 C.F.R. Part 200, Subpart E may not be charged to other federal financial assistance awards to overcome fund deficiencies; to avoid restrictions imposed by federal statutes, regulations, or federal financial assistance award terms and conditions; or for other reasons. However, these prohibitions would not preclude recipients from shifting costs that are allowable under two or more awards in accordance with existing federal statutes, regulations, or the federal financial assistance award terms and conditions may not be charged to other federal financial assistance awards to overcome fund deficiencies; to avoid restrictions imposed by federal statutes, regulations, or federal financial assistance award terms and conditions; or for other reasons.

XII. Education Amendments of 1972 (Equal Opportunity in Education Act) – Title IX

Recipients must comply with the requirements of Title IX of the Education Amendments of 1972, Pub. L. 92-318 (1972) (codified as amended at 20 U.S.C. § 1681 et seq.), which provide that no person in the United States will, on the basis of sex, be excluded from participation in, be denied the benefits of, or be subjected to discrimination under any educational program or activity receiving federal financial assistance. USDHS implementing regulations are codified at 6 C.F.R. Part 17 and 44 C.F.R. Part 19.

XIII. Energy Policy and Conservation Act

Recipients must comply with the requirements of the Energy Policy and Conservation Act, Pub. L. 94- 163 (1975) (codified as amended at 42 U.S.C. § 6201 et seq.), which contain policies relating to energy efficiency that are defined in the state energy conservation plan issued in compliance with this Act.

XIV. Ensuring the Future is Made in All of America by All of America's Workers

Recipients must comply with the "Build America, Buy America" provisions of the Infrastructure Investment and Jobs Act and E.O. 14005 which provide that, as appropriate and to the extent consistent with law, the recipient must use all practicable means within their authority under a federal award to provide a preference for the purchase, acquisition, or use of goods, products, or materials produced in the United States (including but not limited to iron, aluminum, steel, cement, and other manufactured products.)

XV. False Claims Act and Program Fraud Civil Remedies

Recipients must comply with the requirements of the False Claims Act, 31 U.S.C. §§3729- 3733, which prohibit the submission of false or fraudulent claims for payment to the Federal Government. (See 31 U.S.C. §§ 3801-3812, which details the administrative remedies for false claims and statements made.)

XVI. Federal Debt Status

All recipients are required to be non-delinquent in their repayment of any federal debt. Examples of relevant debt include delinquent payroll and other taxes, audit disallowances, and benefit overpayments. (See OMB Circular A-129.)

XVII. Federal Leadership on Reducing Text Messaging while Driving

Recipients are encouraged to adopt and enforce policies that ban text messaging while driving as described in E.O. 13513, including conducting initiatives described in Section 3(a) of the Order when on official government business or when performing any work for or on behalf of the Federal Government.

XVIII. Fly America Act of 1974

Recipients must comply with Preference for U.S. Flag Air Carriers (air carriers holding certificates under 49 U.S.C.) for international air transportation of people and property to the extent that such service is available, in accordance with the International Air Transportation Fair Competitive Practices Act of 1974, 49 U.S.C. § 40118, and the interpretative guidelines issued by the Comptroller General of the United States in the March 31, 1981, amendment to Comptroller General Decision B-138942.

XIX. Hotel and Motel Fire Safety Act of 1990

Recipients must ensure that all conference, meeting, convention, or training space funded in whole or in part with federal funds complies with the fire prevention and control guidelines of Section 6 of the Hotel and Motel Fire Safety Act of 1990, 15 U.S.C. § 2225a.

XX. John S. McCain National Defense Authorization Act of Fiscal Year 2019

Recipients, sub-recipients, and their contractors and subcontractors are subject to the prohibitions described in section 889 of the John S. McCain National Defense Authorization Act for Fiscal Year 2019, Pub. L. No. 115-232 (2018) and 2 C.F.R. §§ 200.216, 200.327, 200.471, and Appendix II to 2 C.F.R. Part 200. Beginning August 13, 2020, the statute – as it applies to USDHS recipients, sub-recipients, and their contractors and subcontractors – prohibits obligating or expending federal award funds on certain telecommunications and video surveillance products

and contracting with certain entities for national security reasons.

XXI. Limited English Proficiency (Civil Rights Act of 1964, Title VI)

Recipients must comply with Title VI of the Civil Rights Act of 1964, (42 U.S.C. § 2000d et seq.) prohibition against discrimination on the basis of national origin, which requires that recipients of federal financial assistance take reasonable steps to provide meaningful access to persons with limited English proficiency (LEP) to their programs and services. For additional assistance and information regarding language access obligations, please refer to the USDHS Recipient Guidance: https://www.dhs.gov/guidance- published-help- department- supported-organizations-provide-meaningful-access-people-limited and additional resources on http://www.lep.gov.

XXII. Lobbying Prohibitions

Recipients must comply with 31 U.S.C. § 1352, which provides that none of the funds provided under a federal financial assistance award may be expended by the recipient to pay any person to influence, or attempt to influence an officer or employee of any agency, a Member of Congress, an officer or employee of Congress, or an employee of a Member of Congress in connection with any federal action related to a federal award or contract, including any extension, continuation, renewal, amendment, or modification.

XXIII. National Environmental Policy Act

Recipients must comply with the requirements of the National Environmental Policy Act of 1969, (NEPA) Pub. L. 91-190 (1970) (codified as amended at 42 U.S.C. § 4321 et seq. and the Council on Environmental Quality (CEQ) Regulations for Implementing the Procedural Provisions of NEPA, which require recipients to use all practicable means within their authority, and consistent with other essential considerations of national policy, to create and maintain conditions under which people and nature can exist in productive harmony and fulfill the social, economic, and other needs of present and future generations of Americans.

XXIV. Nondiscrimination in Matters Pertaining to Faith-Based Organizations

It is USDHS policy to ensure the equal treatment of faith-based organizations in social service programs administered or supported by USDHS or its component agencies, enabling those organizations to participate in providing important social services to beneficiaries. Recipients must comply with the equal treatment policies and requirements contained in 6 C.F.R. Part 19 and other applicable statues, regulations, and guidance governing the participations of faith-based organizations in individual USDHS programs.

XXV. Non-Supplanting Requirement

Recipients receiving federal financial assistance awards made under programs that prohibit supplanting by law must ensure that federal funds do not replace (supplant) funds that have been budgeted for the same purpose through non-federal sources.

XXVI. Notice of Funding Opportunity Requirements

All the instructions, guidance, limitations, and other conditions set forth in the Notice of Funding Opportunity (NOFO) for this program are incorporated here by reference in the award terms and conditions. All recipients must comply with any such requirements set forth in the program NOFO.

XXVII. Patents and Intellectual Property Rights

Recipients are subject to the Bayh-Dole Act, 35 U.S.C. § 200 et seq, unless otherwise provided by law. Recipients are subject to the specific requirements governing the development, reporting, and disposition of rights to inventions and patents resulting from federal financial assistance awards located at 37 C.F.R. Part 401 and the standard patent rights clause located at 37 C.F.R. § 401.14.

XXVIII. Procurement of Recovered Materials

States, political subdivisions of states, and their contractors must comply with Section 6002 of the Solid Waste Disposal Act, Pub. L. 89-272 (1965), (codified as amended by the Resource Conservation and Recovery Act, 42 U.S.C. § 6962.) The requirements of Section 6002 include procuring only items designated in guidelines of the Environmental Protection Agency (EPA) at 40 C.F.R. Part 247 that contain the highest percentage of recovered materials practicable, consistent with maintaining a satisfactory level of competition.

XXIX. Rehabilitation Act of 1973

Recipients must comply with the requirements of Section 504 of the Rehabilitation Act of 1973, Pub. L. 93-112 (1973), (codified as amended at 29 U.S.C. § 794,) which provides that no otherwise qualified handicapped individuals in the United States will, solely by reason of the handicap, be excluded from participation in, be denied the benefits of, or be subjected to discrimination under any program or activity receiving federal financial assistance.

XXX. Reporting of Matters Related to Recipient Integrity and Performance General Reporting Requirements.

If the total value of any currently active grants, cooperative agreements, and procurement contracts from all federal awarding agencies exceeds $10,000,000 for any period of time during the period of performance of this federal award, then the recipients must comply with the requirements set forth in the government-wide Award Term and Condition for Recipient Integrity and Performance Matters located at 2 C.F.R. Part 200, Appendix XII, the full text of which is incorporated here by reference in the award terms and conditions.

XXXI. Reporting Subawards and Executive Compensation Reporting of first tier subawards.

Recipients are required to comply with the requirements set forth in the government-wide award term on Reporting Subawards and Executive Compensation located at 2 C.F.R. Part 170, Appendix A, the full text of which is incorporated here by reference in the award terms and conditions.

XXXII. SAFECOM

Recipients receiving federal financial assistance awards made under programs that provide emergency communication equipment and its related activities must comply with the SAFECOM Guidance for Emergency Communication Grants, including provisions on technical standards that ensure and enhance interoperable communications.

XXXIII. Terrorist Financing

Recipients must comply with E.O. 13224 and U.S. laws that prohibit transactions with, and the provisions of resources and support to, individuals and organizations associated with terrorism. Recipients are legally responsible to ensure compliance with the Order and laws.

XXXIV. Trafficking Victims Protection Act of 2000 (TVPA) Trafficking in Persons.

Recipients must comply with the requirements of the government-wide financial assistance award term which implements Section 106 (g) of the Trafficking Victims Protection Act of 2000 (TVPA), codified as amended at 22 U.S.C. § 7104. The award term is located at 2 C.F.R. § 175.15,

the full text of which is incorporated here by reference.

XXXV. Universal Identifier and System of Award Management

Requirements for System for Award Management and Unique Entity Identifier Recipients are required to comply with the requirements set forth in the government-wide financial assistance award term regarding the System for Award Management and Universal Identifier Requirements located at 2 C.F.R. Part 25, Appendix A, the full text of which is incorporated here by reference.

XXXVI. USA PATRIOT Act of 2001

Recipients must comply with requirements of Section 817 of the Uniting and Strengthening America by Providing Appropriate Tools Required to Intercept and Obstruct Terrorism Act of 2001 (USA PATRIOT Act), which amends 18 U.S.C. §§ 175–175c.

XXXVII. Use of USDHS Seal, Logo and Flags

Recipients must obtain permission from their USDHS FAO prior to using the USDHS seal(s), logos, crests or reproductions of flags or likenesses of USDHS agency officials, including use of the United States Coast Guard seal, logo, crests or reproductions of flags or likenesses of Coast Guard officials.

XXXVIII. Whistleblower Protection Act

Recipients must comply with the statutory requirements for whistleblower protections (if applicable) at 10 U.S.C § 2409, 41 U.S.C. § 4712, and 10 U.S.C. § 2324, 41 U.S.C. §§ 4304 and 4310.

The remainder of this page is intentionally left blank.

ATTACHMENT 2
Reimbursement Checklist

DHSEM reserves the right to update this check list throughout the life of the grant to ensure compliance with applicable federal and state rules and regulations. ***Please only check the categories that apply to the reimbursement you are currently requesting.***

EQUIPMENT

- ☐ Have all invoices been included?
- ☐ Has AEL # been identified for each purchase?
- ☐ If service/warranty expenses are listed, are they only for the performance period of the grant?
- ☐ Has proof of payment been included? (e.g., canceled check, Electronic Funds Transfer (EFT) confirmation, or P-Card back up documentation which will include receipt with vendor, copy of credit card statement showing expense charged, and payment to credit card Company for that statement)

CONSULTANTS/CONTRACTORS

- ☐ Does the amount billed by consultant add up correctly?
- ☐ Has all appropriate documentation to denote hours worked been properly signed?
- ☐ Have copies of all planning materials and work product (e.g., meeting documents, copies of plans) been included? (If a meeting was held by recipient or contractor/consultant of recipient, an agenda and signup sheet with meeting date must be included).
- ☐ Has the invoice from consultant/contractor been included?
- ☐ Has proof of payment been included? (e.g., canceled check, Electronic Funds Transfer (EFT) confirmation, or P-Card back up documentation which will include receipt with vendor, copy of credit card statement showing expense charged, and payment to credit card Company for that statement).

SALARY POSITIONS (Note: this applies to positions billed under M&A)

- ☐ Have the following been provided: signed time sheet by employee and supervisor and proof that employee was paid for time worked (statement of earnings, copy of payroll check or payroll register)?
- ☐ Has a time period summary sheet been included for total claimed amount?
- ☐ Has a general ledger payroll report been included for total claimed amount? Ensure this report includes both employee and employer payroll information (i.e., benefits/contributions).
- ☐ Does the back-up documentation include a copy of the check stub per employee for the time period covered?
- ☐ Does the back-up documentation provided match the time period for which reimbursement is being requested?

OTHER:

- ☐ If EHP form needed – has copy of it and approval from USDHS/FEMA been included?

MATCHING FUNDS (IF APPLICABLE)

- ☐ Contributions are from Non-Federal funding sources.
- ☐ Contributions are from cash or in-kind contributions which may include training investments.
- ☐ Contributions are not from salary, overtime, or other operational costs unrelated to training.

This page is intentionally left blank.

ATTACHMENT 3
Glossary and Definitions

Applicant: When an entity applies for PA funding, it is the **Applicant**. Once the Applicant receives funding, it is either the **recipient, pass-through entity,** or a **sub-recipient**.

Authorized Equipment List (AEL): The Authorized Equipment List (AEL) is a list of approved equipment types allowed under FEMA's preparedness grant programs.

Backfill: The act of filling a position left by another employee who has been moved to another role.

Cost Match: Recipient or sub-recipient contribution. This can be cash (hard match) or third party in-kind (soft match). 2 C.F.R. 200.306.

Cost Sharing or Matching: The portion of project costs not paid by federal funds or contributions (unless otherwise authorized by federal statute). 2 C.F.R. 200.1 Cost sharing or matching.

Declared fire: An uncontrolled fire or fire complex, threatening such destruction as would constitute a major disaster, which the FEMA Regional Administrator has approved in response to a state's request for a fire management assistance declaration and in accordance with the criteria listed in 44 C.F.R. 204.21. Fire Management Assistance Declaration Criteria.

Disallowed costs: Those charges to a federal award that the federal awarding agency or pass-through entity determines to be unallowable, in accordance with the applicable federal statutes, regulations, or the terms and conditions of the federal award. 2 C.F.R. 200.1 Disallowed costs.

Demobilization: The process and procedures for deactivating, disassembling, and transporting back to their point of origin all resources that had been provided to respond to and support a declared fire.

Disaster: An emergency condition affecting all or part the state, overwhelming local resources, in which there is likely to be a significant recovery period. The Governor may request a Robert T. Stafford Act (Stafford Act) Disaster Declaration through FEMA, asking for the Public Assistance Program, Fire Management Assistance Program, Individual Assistance Program and Mitigation based upon known and estimated damage assessment data.

Disaster Recovery Reform Act of 2018 (DRRA): The DRRA represents the most comprehensive Emergency Management reform since the Post-Katrina Emergency Management Reform Act in 2006. It includes a larger and more reliable funding stream for pre-disaster mitigation, expanded assistance for individuals and households, and support for states, localities, tribes, and territories (SLTTs) to develop their own emergency management capabilities.

Emergency: A condition in which local and state emergency response agencies are overwhelmed by an incident to the point that federal assistance is needed. Unlike a disaster, an emergency does not have a recovery phase. The Governor may request a Stafford Act Emergency Declaration through FEMA, asking for the Public Assistance Program and/or Fire Management Assistance Grant.

Emergency Work: Work which must be done before, during and immediately after a disaster event to save lives and to protect improved property and public health and safety or to avert or lessen the threat of a major disaster. The FEMA Public Assistance emergency work Categories are:

- Category A (Debris Removal)
- Category B (Emergency Protective Measures)

Equipment: Tangible personal property (including information technology systems) having a useful life of more than one year and a per-unit acquisition cost which equals or exceeds the lesser of the capitalization level established by the non-federal entity for financial statement purposes, or $5,000. 2 C.F.R. 200.1 Equipment.

*Expenditures***:** Charges made by a non-federal entity to a project or program for which a federal award was received. 2 C.F.R. 200.1 Expenditures.

Federal Award: The federal financial assistance that a recipient receives directly from a federal awarding agency or indirectly from a pass-through entity. 2 C.F.R. 200.1 Federal award.

Federal Emergency Management Agency (FEMA): The federal agency responsible for coordinating disaster recovery efforts in partnership with state, local, and tribal governments.

Federal Share: The portion of the federal award costs that are paid using federal funds. 2 C.F.R. 200.1 Federal share.

FEMA/State Agreement: A formal, legal document between FEMA and the state or a tribal government giving the understandings, commitments, terms, conditions, and timelines for assistance resulting from a federal disaster, emergency, or fire declaration, declared by the President.

Governor's Authorized Representative (GAR): The person designated by the Governor to execute all necessary documents for disaster assistance programs on behalf of the state and local grant recipients. The GAR is responsible for state compliance with the FEMA/State Agreement. The GAR may also be designated as the State Coordinating Officer.

Hazard Mitigation: Mitigation is the effort to reduce loss of life and property by lessening the impact of disasters.

Hazard Mitigation (Sections 404 and 406): Section 406 Mitigation measures are specific to the mechanism of the declared disaster and are an integral part of the reconstructed work on a facility or will protect or benefit the repaired portion of the facility. These are different from mitigation measures that are considered for eligibility under the Hazard Mitigation Grant Program (HMGP) of Section 404 of the Stafford Act. In the HMGP program, measures are proposed that may involve facilities other than those damaged by the disaster, new facilities, or even non-structural measures such as the development of floodplain management regulations.

Incident Period: The time interval during which the declared disaster occurs. The Regional Administrator, in consultation with the Governor's Authorized Representative and the Principal Advisor will establish the incident period. Generally, costs must be incurred during the incident period to be considered eligible.

The declaration designates the incident period. The incident period is the span of time during which the federally declared incident occurs. This period varies in length, depending on the incident.

Improved Project: When performing restoration work on a damaged facility, a sub-recipient may use the opportunity to make improvements to the facility. Projects that incorporate such improvements are improved projects. The improved facility must have the same function and at least the equivalent capacity as that of the pre-disaster facility. Federal funding for improved projects is limited to the lesser of the following: the federal share of the approved estimated costs to restore the damaged facility to its pre-disaster design and function or the federal share of the actual cost of completing the improved project. The sub-recipient must obtain FEMA approval, via the NMDHSEM, for an improved project prior to

construction.

Indirect Costs: Costs a recipient or sub-recipient incurs for a common or joint purpose benefitting more than one cost objective that are not readily assignable to the cost objectives specifically benefited.

Joint Field Office (JFO): A temporary facility established in or near a declared disaster area to serve as the field headquarters for FEMA, other federal and state recovery personnel, and serve as the focal point for federal disaster operations, direction, coordination, and information.

Large Project: An approved project estimated to cost the same as or more than the large project threshold amount. The large project threshold is a dollar amount adjusted annually to reflect changes in the Consumer Price Index for all urban consumers. The large project threshold amount, applicable to all projects, is the amount in effect on the declaration date of the disaster, regardless of when project approval is made or when the work is performed.

Management Costs: Management costs are any indirect costs, any direct administrative costs, and any other administrative expenses associated with the administration of HMA awards and subawards. Management costs are provided under HMGP, HMGP Post Fire, BRIC and FMA. For the Hazard Mitigation Grant Program (HMGP) and Hazard Mitigation Grant Program Post Fire (HMGP Post Fire), recipients will be reimbursed no more than 15% of the total amount of the award, of which not more than 10% may be used by the recipient and 5% by the subrecipient. Under HMGP and HMGP Post Fire, recipients' Administrative Plans must include procedures for monitoring and reporting on subrecipient management costs before receiving funding for management costs. For Building Resilient Infrastructure and Communities (BRIC) and Flood Mitigation Assistance (FMA), recipients may apply for a maximum of 10% of the total funds requested in their application cost estimate (federal and non-federal shares) for management costs to support the sub-applications included as part of their award. Subapplicants for BRIC and FMA may apply for a maximum of 5% of the total funds requested in a sub-application for management costs. Additional information is available in FEMA Policy #104-11-1, Hazard Mitigation Grant Program Management Costs (Interim).

Pass-through Entity: A non-federal entity that provides a subaward to a sub-recipient to carry out part of a federal program. 2 C.F.R. 200.1 Pass through entity (PTE).

Performance Period for Hazard Mitigation Assistance: The period of time stipulated in the Sub-recipient Grant Agreement, as amended, during which the sub-recipient must finish the approved work. Projects completed after the active Period of Performance deadline will be considered ineligible.

Quarterly Financial Progress Report: The information in this report is used by NMDHSEM to monitor sub-recipient cash flow, performance, and project implementation to ensure proper use of federal funds.

Recipient: Formally referred to as the grantee or sub-grantee or applicant. Federally Recognized Indian Tribal Governments may also be Recipients if they so desire and if they meet FEMA requirements.

Recovery Officer: Aids in the administration of disaster recovery grant programs for statewide disasters and emergencies. Coordinates and co-administers disaster recovery grant programs, ensuring that they are implemented and carried out according to state and federal program requirements.

Recovery Unit: This is the unit within the NMDHSEM Response and Recovery Bureau designated as responsible for the programmatic administration of the FEMA PA and FMAG Programs.

Recovery Unit Manager: Responsible for administering and supervising staff responsible for federal and state disaster recovery programs and serves as the Deputy State Coordinating Officer (SCO) for

emergencies or major disaster declarations.

Response & Recovery Bureau Chief: Responsible for supervising staff responsible for federal and state disaster recovery programs and staff that provides operational response capabilities to support the citizens of New Mexico. This position also serves as State Coordinating Officer (SCO) for emergencies or major disaster declarations.

Request for Approval Form: Used by sub-recipient to request approval from NMDHSEM to expend funds for previously identified and approved projects. Approval must be received prior to expenditure.

Small Project: An approved project estimated to cost less than the large project threshold amount.

State Coordinating Officer (SCO): The person designated by the Governor to coordinate state and local disaster assistance efforts with those of the federal government. The GAR may also be the SCO. The Governor will name the GAR and the SCO in the FEMA/State Agreement.

Sub-recipient: Formally referred to as the sub-grantee or applicant, is a state agency, local government, tribal government, other legal governmental entity, or a private non-profit (PNP) organization that receives a sub-grant award and which is accountable to the state for the use of the funds provided. The FEMA reserves the final decision as to sub-recipient eligibility.

Supplanting: When a state or unit of local government reduces state or local funds for an activity specifically because federal funds are available (or expected to be available) to fund that same activity. When supplanting is not permitted, federal funds must be used to **supplement** existing state or local funds for program activities and may not replace state or local funds that have been appropriated or allocated for the same purpose. Additionally, federal funding may not replace state or local funding that is required by law. If a question of supplanting arises, the sub-recipient or grantee will be required to substantiate that the reduction in non-federal resources occurred for reasons other than the receipt or expected receipt of federal funds. US Department of Justice Office of Justice Programs, Grants 101.

The remainder of this page is intentionally left blank.

ATTACHMENT 4
Acronyms

AEL: Authorized Equipment List
AGAR: Alternate Governor's Authorized Representative
ASB: Administrative Services Bureau of NMDHSEM
CFDA: Catalog of Federal Domestic Assistance
DAC: Direct Administrative Costs
DOT: Department of Transportation
DPS: Department of Public Safety
DRRA: Disaster Recovery Refo1m Act of 2018
DSCO: Deputy State Coordinating Officer
DSIBD: Deputy State Infrastructure Branch Director
DSPAGS: Deputy State Public Assistance Group Supervisor
EMAC: Emergency Management Assistance Compact
EMMIE: Emergency Management Mission Integrated Environment
EMNRD: Energy, Minerals and Natural Resources Department
FEMA: Federal Emergency Management Agency
FFATA- Federal Funding Accountability and Transparency Act
FMAG - Fire Management Assistance Grant
GAR: Governor's Authorized Representative
IMAS: Intrastate Mutual Aid System
INF: Immediate Needs Funding
IOF: Initial Operating Facility
JFO: Joint Field Office
NSPO: Net Small Project Overrun
NMDHSEM: New Mexico Department of Homeland Security and Emergency Management
ONA: Other Needs Assistance
OMB: Office of Management and Budget
PA: Public Assistance
PAGS: Public Assistance Group Supervisor
PAPPG: Public Assistance Program and Policy Guide
PDA: Preliminary Damage Assessment
PDMG: Program Delivery Manager
PIO: Public Information Officer
PNP: Private Non-Profit
POP: Period of Performance
PW: Project Worksheet
R&R: Response & Recovery Bureau
REC: Record of Environmental Consideration
RO: Recovery Officer
RP A - Request for Public Assistance
SCO: State Coordinating Officer
SOW: Scope of Work
SHARE: New Mexico Statewide Human Resources, Accounting, and Management Reporting System

SIBD: State Infrastructure Branch Director
SPAGS: State Public Assistance Group Supervisor
SPAO: State Public Assistance Officer
USDHS: United States Department of Homeland Security
USFS: US Forest Service
VFO: Virtual Field Office

The remainder of this page is intentionally left blank.

2023_HMGP_SGA_HazardMitigationPlan

Final Audit Report 2024-10-02

Created:	2024-10-02
By:	JULIE KENNY (jckenny@santafenm.gov)
Status:	Signed
Transaction ID:	CBJCHBCAABAAPILoCCyJ_K5S32r5PWYAV5Zcob1IKO6d

"2023_HMGP_SGA_HazardMitigationPlan" History

Document created by JULIE KENNY (jckenny@santafenm.gov)
2024-10-02 - 2:52:50 PM GMT- IP address: 63.232.20.2

Document emailed to Rebecca Mnuk-Herrmann (ramnukherrmann@santafenm.gov) for signature
2024-10-02 - 2:53:31 PM GMT

Email viewed by Rebecca Mnuk-Herrmann (ramnukherrmann@santafenm.gov)
2024-10-02 - 3:42:01 PM GMT- IP address: 104.47.64.254

Document e-signed by Rebecca Mnuk-Herrmann (ramnukherrmann@santafenm.gov)
Signature Date: 2024-10-02 - 3:42:21 PM GMT - Time Source: server- IP address: 63.232.20.2

Agreement completed.
2024-10-02 - 3:42:21 PM GMT

Powered by Adobe Acrobat Sign

City of Santa Fe New Mexico

Finance Department

Project Ledger Request Form

Date of Request: 9/17/2024

Project Title: HAZARD MITIGATION PLAN & WILDFIRE RISK ASSESSMENT

Project Type: ☐ CIP ☑ Grant ☐ Internal Tracking

Project ID: OEM2522101

Grant ID: S2533/F2512

Approved By: _____

CT (Finance Use Only)

Department: OEM Project Manager: KYLE MORGAN Ext: 6704

Project Date Range: 7/23/2024 to 11/14/2027 ☐ Create Fixed Asset

---

☑ Multi-Funding (complete all funding sources, should equal 100%)

Funding Source: DHSEM-SUB GRANT (FEMA) DR-4652-0011-NM % of Funding: 75

MUNIS ORG: 2212850 MUNIS OBJ: 490580 Awarded Amount: 124574.82

Funding Source: NMDFA 24-ZI5044-MG25-084 % of Funding: 25

MUNIS ORG: 2212850 MUNIS OBJ: 490210 Awarded Amount: 38934.25

Expense String Phase:

A project must have at least one phase identified, this can be used as an additional level of tracking, for example, CIP - Design, Construction, etc. For Grants can be used as reimbursable types, such as transportation, salaries.

(You can create more than one phase and you can default MUNIS ORGs and OBJs, optional)

Phase: PLANNING, GRANT MGMT. MUNIS ORG: 2212850 MUNIS OBJ: 510300

Grants Only (list all grants if applicable):

Grantor Name: FED P/T NMDHEM-FEMA-DR-4652-0011-NM Awarded Amount: 124574.82

AR Charge Code: 2122850.490580 ☐ Grant funds multiple projects (Complete a form for each project)

Grantor Id: _____ Federal CFDA (if applicable): 97.039

Grantor Name: NMDFA 24-ZI5044-MG25-084 Awarded Amount: 38934.25

AR Charge Code: 2212850.490210 ☐ Grant funds multiple projects (Complete a form for each project)

Grantor Id: _____ Federal CFDA (if applicable): N/A

(If grants please provide all grant award documents with form) ☑ Attached Grant Documentation

Signature: Matthew Bonifer
Matthew Bonifer (Sep 20, 2024 15:41 MDT)

Email: mtbonifer@santafenm.gov

2023_HMGP_HazardMitigationPlan_Council_Packet_2024-10-23

Final Audit Report 2024-11-01

Created:	2024-10-30
By:	Justin Gonzales (jmgonzales@santafenm.gov)
Status:	Signed
Transaction ID:	CBJCHBCAABAAeuZ-CNx17GJSTweIu8Jqf9ZfnzNjnKK-

"2023_HMGP_HazardMitigationPlan_Council_Packet_2024-10-23" History

Document created by Justin Gonzales (jmgonzales@santafenm.gov)
2024-10-30 - 4:50:13 PM GMT- IP address: 63.232.20.2

Document emailed to BRIAN WILLIAMS (bgwilliams@santafenm.gov) for signature
2024-10-30 - 4:54:35 PM GMT

Email viewed by BRIAN WILLIAMS (bgwilliams@santafenm.gov)
2024-10-30 - 5:00:51 PM GMT- IP address: 104.47.64.254

Document e-signed by BRIAN WILLIAMS (bgwilliams@santafenm.gov)
Signature Date: 2024-10-30 - 5:01:23 PM GMT - Time Source: server- IP address: 63.232.20.2

Document emailed to bjmoya@santafenm.gov for signature
2024-10-30 - 5:01:25 PM GMT

Email viewed by bjmoya@santafenm.gov
2024-10-30 - 5:01:49 PM GMT- IP address: 98.60.113.23

Signer bjmoya@santafenm.gov entered name at signing as Brian J Moya
2024-10-30 - 5:02:47 PM GMT- IP address: 98.60.113.23

Document e-signed by Brian J Moya (bjmoya@santafenm.gov)
Signature Date: 2024-10-30 - 5:02:49 PM GMT - Time Source: server- IP address: 98.60.113.23

Document emailed to HENRI HAMMOND-PAUL (hmhammondpaul@santafenm.gov) for signature
2024-10-30 - 5:02:53 PM GMT

Email viewed by HENRI HAMMOND-PAUL (hmhammondpaul@santafenm.gov)
2024-10-31 - 3:35:17 PM GMT- IP address: 104.47.64.254

Powered by Adobe Acrobat Sign

Document e-signed by HENRI HAMMOND-PAUL (hmhammondpaul@santafenm.gov)
Signature Date: 2024-10-31 - 3:35:35 PM GMT - Time Source: server- IP address: 63.232.20.2

Document emailed to mtbonifer@santafenm.gov for signature
2024-10-31 - 3:35:37 PM GMT

Email viewed by mtbonifer@santafenm.gov
2024-10-31 - 3:43:09 PM GMT- IP address: 104.47.64.254

Signer mtbonifer@santafenm.gov entered name at signing as Matthew Bonifer
2024-10-31 - 4:10:27 PM GMT- IP address: 63.232.20.2

Document e-signed by Matthew Bonifer (mtbonifer@santafenm.gov)
Signature Date: 2024-10-31 - 4:10:29 PM GMT - Time Source: server- IP address: 63.232.20.2

Document emailed to ajhopkins@santafenm.gov ajhopkins@santafenm.gov (ajhopkins@santafenm.gov) for signature
2024-10-31 - 4:10:31 PM GMT

Email viewed by ajhopkins@santafenm.gov ajhopkins@santafenm.gov (ajhopkins@santafenm.gov)
2024-10-31 - 4:13:10 PM GMT- IP address: 104.47.64.254

Document e-signed by ajhopkins@santafenm.gov ajhopkins@santafenm.gov (ajhopkins@santafenm.gov)
Signature Date: 2024-10-31 - 4:14:01 PM GMT - Time Source: server- IP address: 63.232.20.2

Document emailed to EMILY OSTER (ekoster@santafenm.gov) for signature
2024-10-31 - 4:14:03 PM GMT

Email viewed by EMILY OSTER (ekoster@santafenm.gov)
2024-11-01 - 5:05:19 PM GMT- IP address: 104.47.64.254

Document e-signed by EMILY OSTER (ekoster@santafenm.gov)
Signature Date: 2024-11-01 - 5:11:02 PM GMT - Time Source: server- IP address: 63.232.20.2

Document emailed to JOHN BLAIR (jwblair@santafenm.gov) for signature
2024-11-01 - 5:11:04 PM GMT

Email viewed by JOHN BLAIR (jwblair@santafenm.gov)
2024-11-01 - 6:44:48 PM GMT- IP address: 104.47.64.254

Signer JOHN BLAIR (jwblair@santafenm.gov) entered name at signing as John Blair
2024-11-01 - 6:45:17 PM GMT- IP address: 63.232.20.2

Document e-signed by John Blair (jwblair@santafenm.gov)
Signature Date: 2024-11-01 - 6:45:19 PM GMT - Time Source: server- IP address: 63.232.20.2

Powered by Adobe Acrobat Sign

Agreement completed.

2024-11-01 - 6:45:19 PM GMT

Signature: XAVIER VIGIL
XAVIER VIGIL (Nov 1, 2024 16:14 MDT)

Email: xivigil@santafenm.gov

24-0637 New Mexico Department of Finance and Adeministration

Final Audit Report 2024-11-01

Created:	2024-11-01
By:	XAVIER VIGIL (xivigil@santafenm.gov)
Status:	Signed
Transaction ID:	CBJCHBCAABAAA2DinkK6hTQip_owp6JQbjGeLDwtUJIX

"24-0637 New Mexico Department of Finance and Adeministrati on" History

Document created by XAVIER VIGIL (xivigil@santafenm.gov)
2024-11-01 - 10:12:59 PM GMT- IP address: 63.232.20.2

Document e-signed by XAVIER VIGIL (xivigil@santafenm.gov)
Signature Date: 2024-11-01 - 10:14:24 PM GMT - Time Source: server- IP address: 63.232.20.2

Document emailed to GERALYN CARDENAS (gfcardenas@santafenm.gov) for signature
2024-11-01 - 10:14:26 PM GMT

Email viewed by GERALYN CARDENAS (gfcardenas@santafenm.gov)
2024-11-01 - 10:15:18 PM GMT- IP address: 104.47.65.254

Document e-signed by GERALYN CARDENAS (gfcardenas@santafenm.gov)
Signature Date: 2024-11-01 - 10:15:33 PM GMT - Time Source: server- IP address: 63.232.20.2

Agreement completed.
2024-11-01 - 10:15:33 PM GMT

Powered by Adobe Acrobat Sign

City of Santa Fe, New Mexico
Memorandum

Date: **October 23, 2024**

To: **Governing Body**

Via: Regina Wheeler
Regina Wheeler (Oct 22, 2024 08:51 MDT)
Regina Wheeler, Public Works Director

From: **Jeanne Wolfenbarger, PE Public Works Complete Streets Engineer** Jeanne Wolfenbarger

ACTION
Approval of a Budget Amendment Resolution (BAR) to Reappropriate Unspent FY 24 Budget in the Amount of $175,000 to Engage a Consultant to Compile the Public Infrastructure Development Standards for Chapter 14 Code Revisions. (Jeanne Wolfenbarger, P.E., Public Works Complete Streets Engineer, jawolfenbarger@santafenm.gov)

BACKGROUND & SUMMARY:
On December 13, 2023, the Governing Body approved an FY24 Budget Amendment Resolution (BAR) from FY23 Gross Receipts Tax Revenue for this same effort and amount. In September 2024, staff was notified that the funding would be not carried forwarding into FY25, and therefore seeking reauthorization.

The Public Infrastructure Development Standards will include design related to roads and roadway drainage, stormwater, pedestrian and bicycle facilities, and parks. This work is being undertaken in coordination with Land Use's revision of Chapter 14 Code. These design standards will reflect Santa Fe values identified in plans, programs and policies including Complete Street resolutions, MPO Master Plans and the City of Santa Fe Multimodal Transition Plan.

Funding Source: FY 24 Budget Allocation of FY 23 GRT Revenue earned over budgeted estimates

Project Ledger ID/Name: PWD241000A – PW / Land Use Development Code
Fund Name/Number: General Fund/ 100
Org Name/Number: Public Works Admin / 1006001
Object Name/Number: Professional Contracts / 510300

Attachments:
BAR
Munis Detail of Unspent FY 24 Budget

Log # {Finance use only}:	
Journal # {Finance use only}:	

City of Santa Fe, New Mexico
BUDGET AMENDMENT RESOLUTION (BAR)

DEPARTMENT / DIVISION NAME	DATE
Public Works / Public Works Admin	10/21/2024

ITEM DESCRIPTION	ORG	OBJECT	PROJECT	INCREASE	DECREASE
EXPENDITURES				{enter as positive #}	{enter as negative #}
Professional Contracts - LU Code Revisions	1006001	510300	PWD241000A	175,000	
REVENUES				{enter as negative #}	{enter as positive #}
				$ 175,000	$ -

JUSTIFICATION: *(use additional page if needed)*
--Attach supporting documentation/memo

Reappropriate FY 24 unspent budget for City Code Chapter 14 Land Development Code revisions within the Public Works Department to FY 25.

{Complete section below if BAR results in a net change to ANY Fund}	
Fund(s) Affected	Fund Balance Increase/(Decrease)
100	(175,000)
TOTAL:	(175,000)

Halona Crowe — Prepared By {print name} — 10/21/2024 Date

{Use this form for Finance Committee/ City Council agenda items ONLY}

Andy Hopkins — Budget Officer — Date

CITY COUNCIL APPROVAL

City Council Approval Date

Agenda Item #:

Division Director Signature {optional} — Date

Regina Wheeler
Regina Wheeler (Oct 21, 2024 15:19 MDT)

Department Director Signature — Date

Finance Director {≤ $5,000} — Date

City Manager {≤ $60,000} — Date

Account Inquiry [CITY OF SANTA FE]

Account

Fund	100	GENFUND
Org	1006001	PW Admin
Object	510300	Prfsl Cntr
Project		

4 Year Comparison | Current Year | I

Yr/Per 2024/13	Fiscal Year 2024
Original Budget	.00
Transfers In	351,406.00
Transfers Out	-45,500.00
Revised Budget	305,906.00
Actual (Memo)	34,698.23
Encumbrances	40,359.28
Requisitions	.00
Available	230,848.49
Percent used	24.54

Project string

Project *	PWD241000A	CH 14 LAND USE DEVELOPMENT CODE
Phase *	ContrSvc	Contractual Services
Task *		
Sub-Task *		

Name *	CH 14 LAND USE DEVELOPMENT COD		
Short Name *	CH 14 LAND		
Status	Active		
Projected date range	11/13/2023	to	11/13/2024
Actual date range		to	

Project String Balances | GL Accounts

	Project Year 2024	Project Year 2023
Original Budget	.00	.00
Transfers - In	199,000.00	.00
Transfers - Out	.00	.00
Revised Budget	199,000.00	.00
Actual (Memo)	3,241.57	.00
Encumbrances	17,909.10	.00
SOY Encumbrances	.00	.00
Requisitions	.00	.00
Inception to SOY	.00	.00
Available	177,849.33	.00
Percent Used	10.63	0.00

City of Santa Fe, New Mexico
Memorandum

Date: **November 14, 2023**

To: **Governing Body**

Via: Regina Wheeler
Regina Wheeler (Dec 1, 2023 09:17 MST)

Regina Wheeler, Public Works Director

Emily K. Oster
Emily K. Oster (Dec 1, 2023 11:09 MST)

Emily Oster, Finance Director

From: **Jeanne Wolfenbarger, PE Public Works Complete Streets Engineer** Jeanne Wolfenbarger
Erick Aune, MPO Officer Erick Aune
Erick Aune (Dec 1, 2023 09:08 MST)

ACTION
Approval of a Budget Amendment Resolution (BAR) from FY23 Gross Receipts Tax Revenue Earned Over Budgeted Estimates in the Amount of $175,000 to Engage a Consultant to Compile Public Works elements for the City Code Chapter 14 Land Development Code Revision.

BACKGROUND & SUMMARY:
The Chapter 14 Land Development Code Revision project is underway. The elements of this code that relate to rights of way, stormwater, pedestrian and bicycle facilities, parks and street lighting require updating so that public infrastructure built by private developers meets the City's goals. This work will be undertaken by Public Works and MPO in coordination with Land Use.

The street design standards will be updated to reflect Santa Fe values identified in plans, programs and policies including Complete Street resolutions, MPO Master Plans and the City of Santa Fe Multimodal Transition Plan. The City has relied on NMDOT standards and national standards which can result in roads designed which are prioritized for the movement of vehicles limiting options for pedestrians, bicyclists and transit riders.

Funding Source: FY 23 GRT Revenue earned over budgeted estimates

Funding destination
Project Ledger ID/Name: PWD241000A – PW / Land Use Development Code
Fund Name/Number: General Fund/ 100
Org Name/Number: Public Works Admin / 1006001
Object Name/Number: Professional Contracts / 510300

Attachments:
BAR

Log # {Finance use only}:	BA002666
Journal # {Finance use only}:	pd 6 JE 1144

City of Santa Fe, New Mexico
BUDGET AMENDMENT RESOLUTION (BAR)

DEPARTMENT / DIVISION NAME	DATE
Public Works / Public Works Admin	11/13/2023

ITEM DESCRIPTION	ORG	OBJECT	PROJECT	INCREASE	DECREASE
EXPENDITURES				{enter as positive #}	{enter as negative #}
Professional Contracts - LU Code Revisions	1006001	510300	PWD241000A	175,000	
REVENUES				{enter as negative #}	{enter as positive #}
				$ 175,000	$ -

JUSTIFICATION: *(use additional page if needed)*
–Attach supporting documentation/memo

Use of prior year Gross Receipts Tax revenue earned over budgeted estimates to enact City Code Chapter 14 Land Development Code revisions within the Public Works Department.

{Complete section below if BAR results in a net change to ANY Fund}

Fund(s) Affected	Fund Balance Increase/(Decrease)
100	(175,000)
TOTAL:	(175,000)

Halona Crowe — Prepared By {print name} — 11/13/2023 Date

Division Director Signature {optional} — Date

Regina Wheeler (Dec 1, 2023 09:17 MST)
Department Director Signature — Date

{Use this form for Finance Committee/ City Council agenda items ONLY}

CITY COUNCIL APPROVAL

City Council Approval D: 12/13/23

Agenda Item #: 9-aa

Alexis Lotero (Dec 1, 2023 10:59 MST)
Budget Officer — Date

Finance Director {≤ $5,000} — Date

City Manager {≤ $60,000} — Date

CITY OF SANTA FE

Date: October 1, 2024

To: Mayor Alan Webber
Governing Body
Finance Committee
Quality of Life Committee

Via: Eric Candelaria, ITT Department Director EC

From: Michelle A. Gurule, Contracts Administrator MG

Subject: **Cloud Storage and Maintenance of the City of Santa Fe AS400 Data**

Vendor Name: **Denovo**

Vendor Number: **3846**

ITEM AND ISSUE:
ITT Department respectfully request your review and approval of Addendum A Professional Services Agreement with Denovo Request for the Approval of Cloud Storage and Maintenance of the City of Santa Fe AS400 data in the total amount of $1,819,244.00 FY24 $343,508.00 FY25 $479,112.00 FY26 $498,312.00 FY27 $498,312.00 (Cloud Storage and Maintenance three years from date of final signature approval); (Denovo/ITT Department); (Eric Candelaria, edcandelaria@santafenm.gov, 505-955-5576)

- Cloud Storage and Maintenance of the City of Santa Fe AS400 data Upgrade $1,377,640.77-FY24 $343,504.77 FY25 $344,712.00 FY26 $344,712.00 FY27 $344,712.00
- Original Contract #23-0595
- Reason for amendment (Increase compensation $1,819,244.00)
- Date of original contract approval by Governing Body October 3, 2023

Action Requested: Approval of Contract

BACKGROUND AND SUMMARY:
The City of Santa Fe's current AS400 system has reached end of life. As of April of 2024, ITT will no longer be able to support or maintain the current AS400 System. Due to multiple departments still having a necessity for this system for multiple financial requirements and archive availability The City of Santa needs to establish a solution for continued support. Denovo will allow the data stored on the current system to be transferred and maintained through cloud storage and support. Allowing the City to continue daily financial duties and to archive necessary data.

PROCUREMENT METHOD:

The procurement method is the General Services Agreement (GSA) # GS-35F-0026Y which expires on October 16,2026.

Chief Procurement Officer Approval: _____ **Date:** Oct 22, 2024
Comment/Exceptions: NMSA 1978, Section 13-1-129, GSA

Supporting Information:

CONTRACT NUMBER:
The FY25 Munis contract number is 3204315

SOURCE/REVENUE: ☒**Expense** ☐**Revenue**

The funding source is:
Fund Name/Number: CIP Special Projects/Fund 325
Munis Org Name/Number: Enterprise Resource Planning/3253950
Munis Object Name/Number: Other Consulting/510340

Grant Manager / Accounting Officer Approval: No **Date:**
Comment/Exceptions: _____

Budget Officer Approval: Andy Hopkins **Date:** Oct 22, 2024
Comment/Exceptions: _____

CAPITAL ASSET (will this procurement result in a tangible item that costs more than $5,000?):

☐**Yes |** ☒ **No**

Repair or Replacement of Existing Equipment:

☐**Yes |** ☒ **No**

Capital Project:
(New and improvement projects that are going to cost $10,000 or more)
☐ **Yes |** ☒ **No**

Department Approvals:
IT Components: ☒ **Yes |** ☐ **No**
Vehicles: ☐ **Yes |** ☒ **No**
Facilities, Furniture, Fixtures, Equipment: ☐ **Yes |** ☒ **No**

Approval: Eric Candelaria (Oct 1, 2024 13:23 MDT) **Title: Department Director** **Date:**
Approval: _____ **Title:** _____ **Date:** _____
Comment & Exceptions: _____

Department Contract Administrator Contact Info: Michelle A. Gurule, magurule@santafenm.gov
505-955-5533

ATTACHMENTS:

Vendor's Quote
Certificate of Liability Insurance
Addendum A
Professional Contract

Denovo

Service Order 001 Addendum A
Item #23-0595

Customer:	City of Santa Fe	**Contact:**	Zarifa Dushdurova
Service Order Effective Date:	October 1, 2023	**Addendum Effective Date:**	August 15, 2024

This Addendum to Service Order 001 is by and between Denovo Ventures, LLC. ("Denovo") and City of Santa Fe "Customer" or "Client") (each a "Party" and collectively the "Parties").

1. Initial Term

The Initial Term is modified to forty-five (45) months and will expire on June 30, 2027.

2. Service Entitlement, Limitations and Options

1. The Enhancement Services row is replaced in the table in Section 2 of Attachment 001 of that Service Order 001:

- Enhancement Services	Included	1. For the period of July 1, 2024 through September 30, 2024 one hundred eighty (180 hours. 2. Effective October 1, 2024 three hundred (300) hours per quarter.	1. See Enhancement Services Rate Card. 2. Additional hours requires an amendment to the agreement in advance of the hours being provided.

3. Article 2 – Service Fees

Article 2 (b) is replaced as follows:

b. The monthly Service Fee is paid annually in advance based on the compensation table provided in Article 3 – Total Compensation.

4. Article 3 – Total Compensation

Article 3 is replaced as follows:

Effective with the Customer fiscal period beginning July 1, 2024, the table below outlines the total compensation for Customer fiscal periods excluding GRT.

Description	FY24	FY25	FY26	FY27	Total
	October 2023 - June 2024	July 2024 - June 2025	July 2025 - June 2026	July 2026 - June 2027	
Total Fees:	$343,508	$479,112	$498,312	$498,312	$1,819,244
NOTE: FY24 Fees have been paid.					

Total compensation for the four-year term not to exceed $1,819,244 excluding GRT.

This Addendum shall be and is hereby incorporated into SERVICE ORDER 001 for all intents and purposes, and except as otherwise stated herein, the terms, provisions and definitions of the SERVICE ORDER 001 shall continue to apply to this Addendum, as well as in the SERVICE ORDER 001. The SERVICE ORDER 001 is hereby ratified and approved in all respects except where inconsistent with the terms of this Addendum.

IN WITNESS WHEREOF, the Parties hereto have executed this Agreement by their duly authorized representatives as of the date set forth above.

City of Santa Fe

Signature

Name (Type / Print)

Title

Date

DENOVO VENTURES, LLC

Don Landrum
Don Landrum (Sep 28, 2024 20:55 CDT)

Signature

Don Landrum

Name (Type / Print)

Executive Vice President

Title

Sep 28, 2024

Date

IN WITNESS WHEREOF, the parties have agreed to this Amendment as of the date when it is executed by the parties, whichever signature occurs last.

CITY OF SANTA FE:

_____
ALAN WEBBER, MAYOR

ATTEST:

_____
GERALYN CARDENAS, INTERIM CITY CLERK

CITY ATTORNEY'S OFFICE:

Sep 30, 2024
ASSISTANT CITY ATTORNEY

APPROVED FOR FINANCES:

Emily K. Oster
EMILY OSTER, FINANCE DIRECTOR

Denovo

MASTER SERVICES AGREEMENT

This Master Services Agreement ("MSA"), dated as of the date of the last signature ("Effective Date") is by and between Denovo Ventures, LLC, a Colorado limited liability company ("Denovo") and The City of Santa Fe ("Customer" or "Client"), (each a "Party" and together the "Parties").

Customer desires to engage Denovo to provide certain products and services, and Denovo desires to provide such products and services, pursuant to the terms and conditions set forth herein.

NOW, THEREFORE, in consideration of the recitals and mutual covenants contained herein and other good and valuable consideration, the receipt and sufficiency of which are hereby acknowledged, the Parties to this MSA agree as follows:

1. ***Construction.*** This MSA sets forth the general terms and conditions of the Agreement. For each Service Denovo provides, there is a Service Order ("SO") or Statement of Work ("SOW") that sets forth more specifically the Services and Service Levels Denovo will provide the Customer. If the Customer requests any Services that require a software product license or purchase (whether from a third party or from Denovo), in addition to an SO or SOW, Denovo will provide a separate Order Document ("OD") and any applicable license or other agreements to be executed by the Customer. Each SO or SOW, combined with any applicable Change Orders and the MSA, shall constitute an independent contract, provided, however, that a default under any SO, SOW or Order Document shall constitute a default under all other outstanding SOs, SOWs, ODs, or other agreements executed between Denovo and Customer. Notwithstanding the foregoing, any ODs, as well as any license agreements and related documents executed in connection therewith, apply exclusively to the software and other products therein and shall not be part of this Agreement. To the extent there are inconsistencies between the MSA and the SO or SOW, the SO or SOW will govern and control over the MSA. The headings shall be disregarded in construing or interpreting the Agreement.

2. ***Definitions.*** Capitalized terms not otherwise defined herein or in the applicable SO, SOW or Change Order shall be defined as follows:

   a. ***AAA.*** American Arbitration Association.

   b. ***Aggregated Data.*** Any aggregated and statistical data derived from the operation of the Services, including, without limitation, the number of records in the Services, the number and types of transactions, configurations, and reports processed in the Services and the performance results for the Services.

   c. ***Agreement.*** Each SO or SOW, applicable Change Order, and other documents executed pursuant to the MSA, combined with the MSA.

   d. ***Audit.*** The access and audit of Denovo's records, facilities, and locations in which Denovo performs Cloud Services for Customer, Denovo equipment, Denovo software and supporting documentation of Denovo and its subcontractors.

   e. ***Change.*** The addition, subtraction, or change to any Services related to the Agreement; a change that results in increased or reduced Fees for applicable Services; changes to the Service Levels; or any other change to the Agreement.

   f. ***Change Order ("CO").*** A fully executed Change Order Request form that details the Change agreed to by the Parties.

   g. ***Change Order Request.*** A formal request submitted by one Party to the other for a Change to the Agreement.

   h. ***Connectivity.*** Customer is responsible for providing communication connectivity from Customer's network to the cloud services provided by Denovo.

   i. ***Customer Applications.*** All software programs, including any source code for such programs, that the Customer or the Customer's designated affiliates provide in connection with the Agreement.

j. ***Customer Care Portal.*** A web-based service that allows Customers to report problems, request information, and view system metrics.

k. ***Customer Data.*** Customer's Confidential Information and all text, files, images, graphics, information, data, illustrations, personal data, video, audio, photographs, and other content and material in any format, provided or uploaded by the Customer in connection with the Agreement (but not including Work Product, Denovo Intellectual Property, or any material provided by Denovo to Customer and later provided or uploaded by Customer).

i. ***Confidential Information.*** Any proprietary information or data (including the terms of the Agreement), internal business information including, without limitation, business plans, strategies, goals, financial statements, business methods and procedures, services provided, contractual arrangements, Customer and customer lists, work product, contact information, Trade Secrets (as defined below), and any other information designated as confidential by either Party.

m. ***Data Center Network.*** The portion of the Denovo network extending from the outbound port on the Customer edge device to the outbound port of the data center border router and includes Denovo managed switches, routers, and cabling.

n. ***Denovo Intellectual Property.*** All intellectual Property that was developed by Denovo or on Denovo's behalf prior to performance of, or independent of, the Agreement or that is generally applicable to or useable by any of Denovo's other customers or for its business in general regardless of when developed, or that Denovo may, in connection with the performance of Services hereunder, employ, provide, modify, create, or acquire or otherwise obtain rights in. As used herein, "Intellectual Property" means all concepts, ideas, recommendations, methods, methodologies, procedures, processes, know-how and techniques, templates, programs, trademarks and service marks, Trade Secrets, copyrights, patents, software, inventions, discoveries, software, the generalized features of the structure, sequence and organization of software, user interfaces and screen designs, development tools (including without limitation general purpose consulting and software tools), utilities and routines, logic, integrations, coherence and methods of operation of systems, and all other intellectual property and improvements to any of the foregoing .

o. ***Disaster.*** Any unplanned event or condition that renders Customer unable to use, for its intended computer processing and related business purposes, the Denovo Services, reasonably projected by both Customer and Denovo to last more than four (4) consecutive hours.

p. ***Disaster Declaration Notice.*** The notice which the Customer is to provide to Denovo upon the occurrence of a Disaster requesting access to and use the Service set forth herein of this Statement of Work. Any verbal declaration must be followed by written or email notice within twenty four (24) hours of the Disaster Declaration Notice.

q. ***Dispute.*** Any dispute, claim, or controversy arising out of or relating to the negotiation, execution, and performance of the Agreement, including without limitation any alleged contractual, statutory, or tort claims, regardless of whether such claims are brought at law or in equity, and any dispute regarding the arbitrability of such issues as set forth in the Dispute Resolution section below.

r. ***Effective Date.*** The date the MSA, SO, SOW, OD, or CO is executed and goes into effect.

s. ***Expenses.*** Reasonable out-of-pocket expenses that Denovo incurs in connection with the Services, including, without limitation, all reasonable travel, meal, lodging, and mileage expenses.

t. ***Fees*** or ***Charges.*** Any fees or charges for the Services or products described in the Agreement.

u. ***Incident.*** An unplanned interruption or reduction in the quality of Services which is classified according to the severity levels set forth in the SO or SOW.

v. ***Infringement Claim.*** Third party claims against the Customer that any Work Product or Denovo Intellectual Property infringes a presently existing United States copyright, patent or trademark or constitutes misappropriation of unlawful disclosure or use of a third party's trade secrets under United States law.

w. ***Initial Term.*** The period from the Effective Date through the duration of the initial MSA, SO or SOW.

x. ***Late Charge.*** The lesser of (i) one- and one-half percent (1.5%) per month or (ii) the highest rate allowable by law, in each case compounded monthly to the extent allowable by law.

y. ***Law.*** Any declaration, decree, directive, legislative enactment, order, ordinance, regulation, rule, or other binding restriction of or by any federal, state, municipal, local, territorial, or other governmental department, regulatory authority, judicial or administrative body, whether domestic, foreign, or international.

z. ***Order Document ("OD").*** An agreement between Denovo and the Customer that describes the specific software and other products that Customer will license or purchase from Denovo or a third party, as well as related terms and conditions. Each Order Document, as well as any license or other agreement executed in connection therewith, is separate from any SO or SOW provided by Denovo and this Agreement.

aa. ***Patches.*** All patches, bug fixes, updates, maintenance, and service packs necessary for the function and security of the Services.

bb. ***Planned Maintenance.*** Total minutes of planned maintenance in the month.

cc. ***Quarterly Period.*** A three (3) month period with the first period beginning on the first (1st) day of the month after the Effective Date of the Service and ending on the last day of the third (3rd) month. Unless the Termination Date is less than three (3) months, subsequent periods will have a duration of three (3) months.

dd. ***Service or Services.*** Generally, all of the services Denovo agrees to provide Customer as set forth in any applicable SO, SOW, or CO.

ee. ***Service Availability.*** The various specifics of services availability including, without limitation, uptime objectives and downtime credits, as more fully described herein.

ff. ***Service Levels.*** The service levels, if any, that Denovo will adhere to as set forth in the applicable SO or SOW.

gg. ***Service Level Credits.*** Credits to the Customer account for material failure to meet Service Level Objectives.

hh. ***Service Level Objectives.*** All the service level standards as defined in the SO or SOW that pertains to the Services.

ii. **Service Order or SO** . A document that sets forth more specifically the Services, Service Levels Denovo will provide the Customer, a schedule of Fees and Charges, as well as any further terms and conditions that may apply to the Services Denovo will provide the Customer.

jj. **Statement of Work or SOW.** A statement of work that sets forth more specifically the Services, Service Levels Denovo will provide the Client, a schedule of Fees and Charges, as well as any further terms and conditions that may apply to the Services Denovo will provide the Client

kk. ***Successive Term.*** The time the MSA, SO or SOW renews for as defined herein after the Initial Term.

ll. ***Term.*** The Initial Term and all Successive Terms.

mm. ***Termination Date.*** The date on which the Agreement is terminated or expires pursuant to the terms of the Agreement.

nn. ***Trade Secrets.*** Trade secrets as defined under C.R.S. § 7-74-102, including, without limitation, various computer systems and programs, techniques, developments, improvements, inventions, and processes that are, or may be,

produced in the course of the applicable Party's operations, including any other information not generally known concerning such Party or its operations, including products, suppliers, markets, sales, internal costs, costs, margins, profits, Customer needs and lists, and the pricing information made available in the Agreement or other information acquired, disclosed, or made known to employees or agents while in the employ of such Party, which, if used or disclosed by a party other than such Party, could adversely affect such Party's business or give competitors an advantage.

oo. ***Unplanned Downtime.*** Any time the Service is unavailable as measured by an automated probe (script) that will poll the Service, but does not include any time during which the Services or any Services component are not available due to (A) A failure or degradation of performance or malfunction resulting from scripts, data, applications, equipment, infrastructure, software, penetration testing, performance testing, or monitoring agents directed, provided or performed by Customer; (B) Planned outages scheduled or announced maintenance or maintenance windows, or outages initiated by Denovo at the request or direction of Customer for maintenance, activation of configurations, backups or other purposes that require the service to be temporarily taken offline; (C) Outages occurring as a result of any actions or omissions taken by Denovo at the request or direction of Customer; (D) Outages resulting from Customer equipment, or third party equipment not within the sole control of Denovo; (E) Outages due to system administration, commands, or file transfers performed by Customer users or representatives; (F) inability to access the Services or outages caused by Customer's conduct, including negligence or breach of Customer material obligations under the Agreement, or by other circumstances outside of Denovo's control; (G) Lack of availability or untimely response time of Customer to respond to incidents that require Customer participation for source identification and/or resolution, including meeting Customer responsibilities for any Services; or (H) Outages caused by failures or fluctuations in electrical, connectivity, network or telecommunications equipment or lines due to Customer conduct.

pp. ***Work Product.*** Any Intellectual Property, software modifications, enhancements and/or interfaces, together with related specifications, design documents, flow charts, documentation, training manuals, reports, and other tangible work product specifically developed by Denovo for the Customer in accordance with the Agreement, but not including Denovo Intellectual Property.

3. ***Services.*** Denovo shall provide the Services to Customer as set forth in the applicable SO or SOW on the terms and conditions set forth in the Agreement. The Services may include advice and recommendations, but all decisions in connection with the implementation of such advice and recommendations shall be the responsibility of, and made by, the Customer. The Services are exclusively for the use of the Customer and any of its employees or authorized users in accordance with the terms of the Agreement and may not be used by subsidiaries or other affiliates of the Customer unless specifically permitted by the Agreement. To the extent that the Services require the provision of third-party software or support, the Services shall be subject to the terms of Denovo's agreement with such third-party provider as well as Customer's agreement with such third-party provider and Denovo shall have no liability with respect to such third-party software or support, or with respect to Customer's agreement with such third-party provider, except as otherwise specifically stated in the Agreement.

4. ***Payment.***

a. ***Fees and Expenses.*** Each SO or SOW shall set forth the Fees that are to be paid to Denovo. In addition, each SO shall set forth the Expenses (or types of Expenses to the extent the amount of such Expenses aren't known) that are to be reimbursed by Customer in accordance with Denovo's standard travel and expense policies. .

b. ***Invoices.*** Denovo will provide Customer with an invoice pursuant to the schedule set forth in the SO or SOW, but not less often than monthly. Each invoice shall set forth the Fees and Expenses owed to Denovo in reasonable detail, the SO or SOW reference numbers, the cost of any products that are not included in a separate Order Document and, when applicable, the number of hours spent by Denovo personnel in providing the Services during the period invoiced and any accrued Late Charges. For Services that are invoiced on a regular reoccurring basis (for example, for Services that require a monthly fee), Denovo reserves the right, in its sole discretion, to prorate the initial payment(s) in order to ensure that Customer is subsequently billed on Denovo's regular billing cycle for such Services and to invoice such Services in advance. If invoiced items are disputed, Customer must notify Denovo within fifteen (15) days of invoice date. If notice of dispute is not received within fifteen (15) days of

invoice date, all items therein are deemed undisputed. Payment terms for all undisputed invoices or individual invoice items are net thirty (30) days from the date of invoice unless otherwise stated in the applicable SO or SOW.

c. ***Method of Payment.*** Unless otherwise agreed to in writing by both Parties, all amounts to be paid to Denovo under the Agreement shall be paid in U.S. dollars and may be made using electronic or automated clearing house (ACH), automatic bill pay mechanisms, or by federal wire transfer to the account or accounts designated in the applicable invoice. If no such account is designated in an invoice, payment should be made to the account below:

Denovo Ventures, LLC
ACH/Wire: First Citizens Bank
ABA/Routing: 053100300
Account: 1822000629
Beneficiary FCB Customer Account Name: Denovo Ventures, LLC
For international wire instructions please contact AR@Denovo-us.com

d. ***Finance Charges.*** If Denovo does not receive payment for invoices within thirty (30) days of the invoice date, the Late Charge shall accrue. Such Late Charge will be added to the following invoice and shall be due and payable immediately upon receipt of such invoice.

e. ***Taxes.*** Except for federal, state or local income taxes solely based on the income earned by Denovo, the Customer shall be responsible for all taxes in connection with the Agreement including any sales, use, excise, value-added, services, consumption and other taxes and duties assessed on the provision of Services, products or materials by Denovo to the Customer, on Denovo's charges to the Customer under the Agreement, and on any goods or services used or consumed by either Party in connection with the provision of Services under the Agreement.

5. *Term and Termination.*

a. ***Term.*** The Initial Term of this MSA is four (4) years following the Effective Date. Notwithstanding the MSA shall not terminate while any SO, SOW, OD, or CO remains in effect.

b. ***Termination for Cause by Either Party.*** In addition to any termination rights set forth in an SO or SOW regarding termination of such SO or SOW, either Party may terminate the Agreement (and all SO's, SOW's, OD's and other agreements between Customer and Denovo) for the other Party's material breach of the Agreement after giving at least thirty (30) days prior written notice identifying specifically the basis for such notice and referring to this Section of this MSA unless the breaching Party cures such breach within such thirty (30)-day period.

c. ***Termination for Cause by Denovo***. In addition to any termination rights set forth in an SO, SOW or OD regarding termination of such SO or SOW, Denovo may terminate the Agreement and this SO or SOW (and all SO's, SOW's, OD's and other agreements between Customer and Denovo) at any time immediately upon notice to Customer if (i) an outstanding invoice remains unpaid forty-five (45) days after its applicable due date, (ii) the Customer discloses Denovo's Confidential Information in violation of the Agreement, or (iii) the Customer misuses or modifies the Work Product, Denovo Intellectual Property or other deliverables in a manner that causes the infringement of any third party's intellectual property rights.

d. ***Termination for Insolvency.*** Either Party may immediately terminate the Agreement (and all SOs, SOWs, ODs, and other agreements) in whole or in part if the other Party:

i. Makes an assignment for the benefit of creditors, admits in writing its inability to pay debts as they mature, or ceases operating in the normal course of business.

ii. Has a receiver or trustee appointed by a court over the Party or any substantial part of the Customer's assets.

iii. Becomes insolvent or is unable to pay its debts as they become due.

iv. Authorizes, applies for or consents to the appointment of a trustee or liquidator of all or a substantial part of its assets or has proceedings seeking such an appointment commenced against it which are not terminated within ninety (90) days of such commencement.

v. Has any substantial part of its property subjected to any levy, seizure, assignment, or sale for, or by any creditor or governmental agency without said levy, seizure, assignment or sale being lifted, released, reversed or satisfied within ten (10) days.

vi. Files a voluntary petition under any chapters of the United States Bankruptcy Code or any other insolvency law or an involuntary proceeding has been commenced by any Party against the Party under any one of the chapters of the United States Bankruptcy Code or any other insolvency law and (A) the proceeding has been pending for at least sixty (60) days; or (B) the Party has consented, either expressly or by operation of law, to the entry of an order for relief; or (C) the Party has been decreed or adjudged a debtor or equivalent.

e. ***Suspension.*** In the event that the Customer violates any material provision of the Agreement, Denovo may suspend any or all of the Services in addition to any other rights Denovo may have under the Agreement. Denovo will use reasonable efforts to restore the suspended Services promptly after Denovo determines, in its reasonable discretion, that the issues have been resolved or the situation has been cured.

6. ***Employment Matters.***

a. ***Denovo Staffing.*** Denovo shall assign personnel to the Customer account that possess the training, education, expertise, and skill levels appropriate for the Services to be provided by such personnel. Denovo reserves the right to determine which of its personnel shall be assigned to perform Services, and to replace or reassign such personnel during the Term; provided, however, that Denovo, subject to scheduling and staffing considerations, shall use good faith efforts to honor the Customer's request for or lawful objection to specific individuals.

b. ***Customer Staffing.*** Customer shall assign personnel to the performance of Customer responsibilities that possess the appropriate training, education, expertise, and skill levels to perform such Customer responsibilities. Customer reserves the right to determine which of its personnel shall be assigned to perform Customer responsibilities, and to replace or reassign such personnel during the Term; provided that, the Customer shall ensure that the performance by such personnel of Customer responsibilities does not adversely affect the ability of Denovo to perform its obligations under the Agreement.

c. ***Non-solicitation.*** Neither Denovo nor the Customer shall solicit for employment, offer employment to, employ or hire as an independent contractor the other Party's employees, agents, or subcontractors during the Term of the Agreement and for a period of twelve (12) months following expiration or termination of the Agreement except as may be agreed to in writing by both Parties. The Parties acknowledge that the damages caused by a breach of this Section would be difficult to ascertain. Therefore, if either Party violates the foregoing restriction, as the breaching Party's sole obligation and the non-breaching Party's sole and exclusive remedy, the breaching Party will pay the non-breaching Party two (2) times the solicited employee's current annual salary.

d. ***Independent Contractor.*** Denovo shall provide Services to Customer as an independent contractor, and nothing contained herein shall be construed to create a relationship of employer-employee or principal-agent between Denovo and Customer. Neither Party is, nor shall represent itself to be, an agent, partner, fiduciary, joint venture, co-owner or representative of the other.

7. ***Assignment and Subcontracting.***

a. Neither Party shall assign or subcontract any portion of the Agreement without the express and prior written consent of the other Party. Notwithstanding the foregoing, in the event of a merger, acquisition, or sale of substantially all its assets, or reorganization, Denovo may assign the Agreement or any portion thereof to a successor-in-interest or any affiliate of Denovo that has the ability to perform the assigned obligations and has agreed to do so in writing.

b. Notwithstanding Section 7(a), Denovo may subcontract any of its duties under the Agreement, including, without limitation, any SO, SOW or portion thereof, to a subcontractor in the ordinary course of business; provided, however, Denovo will remain liable to the extent provided herein for its performance under the Agreement.

8. ***Confidentiality.***

a. ***General.*** To the extent that either Party comes into possession of any Confidential Information of the other Party in connection with the Agreement or otherwise, such Party may use the Confidential Information of the other Party solely for the purposes of the Agreement and shall not disclose such Confidential Information to any third party without the prior written consent of the other Party.

b. ***Exclusions.*** Notwithstanding any provision herein to the contrary, Confidential Information shall not include information that (i) is or becomes publicly available (other than by breach of the Agreement), (ii) was disclosed to the receiving Party on a non-confidential basis from a source other than the disclosing Party, which the receiving Party reasonably believes is not prohibited from disclosing such information as a result of an obligation in favor of the disclosing Party, (iii) is developed by the receiving Party independent of and without reference to any Confidential Information of the disclosing Party, or was known by the receiving Party prior to any disclosure of such information made by the disclosing Party, in each case as evidenced by the receiving Party's written records, or (iv) is disclosed with the written consent of the owner of the Confidential Information.

c. ***Protection.*** Each Party shall maintain the confidentiality of the Confidential Information of the other Party using at least the same degree of care as it employs in maintaining the confidentiality of its own Confidential Information, but in no event less than a reasonable degree of care.

d. ***Remedies.*** If a Party discloses or uses (or threatens to use or disclose) any Confidential Information of the other Party in breach of the confidentiality protections under the Agreement, the other Party shall have the right, in addition to any other remedies available, to seek injunctive relief to enjoin such acts, as the Parties acknowledge that any other available remedies may be inadequate.

e. ***Compelled Disclosure.*** Notwithstanding the above, the receiving Party shall not be in violation of this confidentiality obligation with regard to a disclosure that was in response to a valid order of a court of competent jurisdiction, administrative agency or governmental body, or by any law, rule or regulation, or by subpoena, summons or any other administrative or legal process, or by applicable regulatory or professional standards, provided that the receiving Party provides the disclosing Party with reasonable prior written notice of such disclosure in order to permit the disclosing Party to seek confidential treatment of such information.

f. ***Trade Secrets.*** Denovo employs Trade Secrets that contain privileged or confidential commercial or financial information that would result in a competitive disadvantage if disclosed without prior permission by Denovo. Because it would cause irreparable harm to Denovo if any of its Trade Secrets were known to its competitors, to the extent that Customer learns any of Denovo's Trade Secrets, Customer shall not disclose or use such Trade Secrets in its own business or for the benefit of any party other than Denovo. In the event that the Customer is a public entity and awards a contract to Denovo, the Customer shall have the restricted right to disclose the entire contract dollar amount, however this disclosure shall not include itemized data or any Trade Secrets.

9. ***Ownership of Intellectual Property.***

a. ***Denovo Ownership.***

i. Denovo shall retain all right, title and interest in and to Denovo Intellectual Property.

ii. All rights, title and interest in Work Product shall vest in Denovo unless otherwise expressly provided in the applicable SO or SOW. Upon Customer's payment of all fees set forth in the applicable SO or SOW, Denovo shall grant to Customer a perpetual, irrevocable, worldwide, royalty-free, fully paid-up, nonexclusive, non-sublicensable license to the Work Product resulting from the Services. Customer shall use the Work Product in a manner and for the purposes for which it was designed and in accordance with the terms of this Agreement solely for its internal business purposes.

iii. Denovo shall own the Aggregated Data. Denovo may utilize the Aggregated Data for purposes of operating Denovo's business unrelated to the provision of Services hereunder, provided that Denovo shall not reveal any Customer Confidential Information.

iv. Except for any license expressly granted in the Agreement, neither the Customer nor any third party shall acquire any right, title, or interest in or to Denovo Intellectual Property or Work Product.

b. ***Customer Ownership.*** The Customer shall retain all right, title and interest in and to the Customer Data. Customer hereby grants to Denovo limited license to use the Customer Data solely to the extent necessary for Denovo to perform the Services hereunder.

10. *Indemnification.*

a. ***General.*** The Parties shall have the following general indemnity obligations:

Denovo shall defend and hold harmless the Customer and its officers, directors, members, managers, employees, subcontractors, and agents from and against:

(i) Infringement Claims so long as the Customer promptly notifies Denovo in writing of the Infringement Claims. Denovo shall provide such defense at its expense and will pay any costs or damages that may be finally awarded by a court of competent jurisdiction against the Customer. Denovo will not indemnify the Customer, however, if the Infringement Claim is caused by (i) the Customer's misuse or modification of the Work Product, Denovo Intellectual Property or other deliverables in a manner that causes the Infringement; (ii) the Customer's use of the Work Product, Denovo Intellectual Property or other deliverables in combination with any hardware, software or information not owned or developed by Denovo; (iii) the Customer's failure to use corrections or enhancements to such Work Product, Denovo Intellectual Property or other deliverables made available by Denovo, (iv) the Customer's distribution, marketing or use for the benefit of third parties of such Work Product, Denovo Intellectual Property or other deliverables or (v) information, specifications, software or materials provided by the Customer or a third party. If any Work Product is, or in Denovo's judgment is likely to become, the subject of an Infringement Claim, Denovo, at its expense and option, shall either (a) procure the right for the Customer to continue using it, (b) replace it with a non-infringing equivalent, (c) modify it to make it non-infringing, or (d) direct the return of the Work Product and refund to the Customer the Fees paid for such Work Product less a reasonable amount for the Customer's use of the Work Product up to the time of return. The foregoing constitutes the Customer's sole and exclusive remedy and Denovo's entire liability with respect to Infringement Claims.

(ii) Any and all losses arising from claims by third parties relating to bodily injury or death of any person or damage to real and/or tangible personal property directly caused by the gross negligence or willful misconduct of Denovo, its personnel or agents in connection with the performance of the Services under the Agreement.

b. ***Procedure.*** To receive any indemnities specified in this Section, the Party seeking indemnification must promptly notify the other Party in writing of a claim or suit and provide reasonable cooperation (at the indemnifying Party's expense) and full authority to defend or settle the claim or suit. The indemnifying Party shall have no obligation to indemnify the indemnified Party under any settlement made without the indemnifying Party's written consent.

11. *Limitation of Liability; Disclaimer of Warranties.* Unless otherwise specifically stated in an SO or SOW with respect to the Services described in, or products or software provided or licensed under, such SO or SOW, the following limitations of liability and disclaimers of warranties shall apply to the Agreement:

a. ***Limitation of Liability.*** IF DENOVO SHALL BE LIABLE TO THE CUSTOMER FOR ANY MATTER RELATING TO OR ARISING FROM THE AGREEMENT, WHETHER BASED UPON AN ACTION OR CLAIM IN CONTRACT, WARRANTY, EQUITY, NEGLIGENCE, INTENDED CONDUCT OR OTHERWISE, THE AGGREGATE AMOUNT OF DAMAGES RECOVERABLE AGAINST DENOVO WITH RESPECT TO ANY AND ALL BREACHES, PERFORMANCE,

NONPERFORMANCE, ACTS OR OMISSIONS HEREUNDER, OR ANY REASON WHATSOEVER, WILL NOT EXCEED THE AGGREGATE AMOUNT OF FEES ACTUALLY PAID BY THE CUSTOMER TO DENOVO UNDER THE SO or SOW PURSUANT TO WHICH DENOVO IS PERFORMING THE SERVICES OR SELLING THE PRODUCTS GIVING RISE TO SUCH BREACH.

b. ***Exclusion of Damages.*** IN NO EVENT SHALL EITHER PARTY OR ITS PERSONNEL BE LIABLE FOR CONSEQUENTIAL, SPECIAL, INDIRECT, INCIDENTAL, PUNITIVE OR EXEMPLARY DAMAGES, COSTS, EXPENSES, OR LOSSES (INCLUDING, WITHOUT LIMITATION, LOST PROFITS AND OPPORTUNITY COSTS) NOR SHALL THEY BE LIABLE FOR ANY CLAIM OR DEMAND AGAINST THE OTHER PARTY BY ANY THIRD PARTY EXCEPT AS OTHERWISE SPECIFICALLY STATED HEREIN. THE PROVISIONS OF THIS SECTION SHALL APPLY REGARDLESS OF THE FORM OF ACTION, DAMAGE, CLAIM, LIABILITY, COST, EXPENSE, OR LOSS, WHETHER IN CONTRACT, STATUTE, TORT (INCLUDING, WITHOUT LIMITATION, NEGLIGENCE), OR OTHERWISE.

c. ***Subcontractor Liability.*** The exclusions and limitations of liability under the Agreement will operate to the benefit of Denovo's subcontractors under the Agreement to the same extent that such provisions operate to the benefit of Denovo. Any limitations of liability hereunder will be computed for Denovo and its subcontractors in the aggregate. Denovo's subcontractors shall be deemed third-party beneficiaries of this Section.

d. ***Disclaimer of Warranties***. EXCEPT AS OTHERWISE SPECIFICALLY SET FORTH IN THE AGREEMENT, DENOVO MAKES NO REPRESENTATIONS OR WARRANTIES, EXPRESS, IMPLIED, STATUTORY, OR OTHERWISE, AND DENOVO CANNOT AND DOES NOT GUARANTY ANY RESULT OR THE EFFECTIVENESS OF THE SERVICES, WORK PRODUCTS, DENOVO INTELLECTUAL PROPERTY OR OTHER GOODS SOLD OR SOFTWARE LICENSED HEREUNDER. ANY SERVICES, WORK PRODUCT, DENOVO INTELLECTUAL PROPERTY OR OTHER GOODS SOLD OR SOFTWARE LICENSED HEREUNDER ARE PROVIDED "AS IS," AND ANY IMPLIED WARRANTY, INCLUDING WITHOUT LIMITATION ANY IMPLIED WARRANTY OF MERCHANTABILITY, FITNESS FOR A PARTICULAR PURPOSE OR NON-INFRINGEMENT IS EXPRESSLY DISCLAIMED. NOTWITHSTANDING ANYTHING HEREIN TO THE CONTRARY, THE WARRANTIES ARE NULL AND VOID IF THE SERVICES, WORK PRODUCTS, DENOVO INTELLECTUAL PROPERTY OR OTHER GOODS SOLD OR SOFTWARE LICENSED HEREUNDER HAVE BEEN MODIFIED, ALTERED, OR REPAIRED BY NON-DENOVO EMPLOYEES OR INDEPENDENT CONTRACTORS.

e. ***Third Party Agreements***. NOTWITHSTANDING ANY OTHER PROVISION IN THE AGREEMENT, DENOVO SHALL HAVE NO LIABILITY TO CUSTOMER UNDER ANY LICENSE OR OTHER AGREEMENT BY AND BETWEEN THE CUSTOMER AND A THIRD PARTY, REGARDLESS OF WHETHER SUCH LICENSE OR AGREEMENT RELATES TO DENOVO'S PROVISION OF SERVICES TO CUSTOMER.

12. ***Insurance.*** Denovo shall maintain insurance throughout the term of this Agreement providing a minimum coverage in the amount required under the New Mexico Tort Claims Act, and as outlined below. Denovo shall furnish the client with proof of insurance of Denovo's compliance with the provisions of this section as condition prior to performing services under this Agreement.

a. ***Business Automobile Liability.*** Covering all vehicles that Denovo owns, hires, or leases with a limit of no less than one million dollars ($1,000,000.00) per accident/employee.

b. ***Commercial General Liability.*** Including Contractual Liability Coverage, with coverage for products liability, completed operations, property damage and bodily injury, including death, with a minimum limit of no less than one million dollars ($1,000,000.00) each occurrence and a minimum limit of two million dollars ($2,000,000.00) in the aggregate.

c. ***Professional Liability Insurance.*** Including Errors and Omissions coverage with a limit of no less than five million dollars ($5,000,000.00) per occurrence and in the aggregate.

13. ***Dispute Resolution.***

a. ***General.*** In the event of any Dispute, one Party shall notify the other Party in writing of the Dispute in sufficient detail to put the other Party on notice of the nature of the Dispute. The Parties shall work together in good faith

first to informally resolve the Dispute internally by escalating it as necessary to progressively higher levels of the administrative structure.

b. ***Mediation.*** If informal discussion fails, the Parties agree that any and all Disputes shall be submitted to the AAA, or its successor, for mediation prior to commencing arbitration proceedings. Either Party may commence mediation by providing AAA and the other Party a written request for mediation, setting forth the subject of the dispute and the relief requested. The mediation shall take place at the AAA office in Santa Fe, New Mexico. The Parties shall participate in the mediation in good faith and will share the costs equally. The Parties will cooperate in the selection of a mediator from the AAA panel of neutrals and the scheduling of the mediation proceedings. All offers, promises, conduct and statements, whether oral or written, made in the course of the mediation by any of the Parties, their agents, employees, experts and attorneys, and by the mediator or any AAA employees, are confidential, privileged and inadmissible for any purpose, including impeachment, in other proceeding involving the Parties, provided that evidence that is otherwise admissible or discoverable shall not be rendered inadmissible or non-discoverable as a result of its use in the mediation. All applicable statutes of limitation and defenses based upon the passage of time shall be tolled from the date of the written request for mediation until fifteen (15) days after the conclusion of mediation. The Parties will take such action, if any, required to effectuate such tolling.

14. ***Authority.*** Each Party represents and warrants to the other that (i) it is duly organized, validly existing and in good standing under the laws of the state in which it is organized or incorporated, (ii) it has all requisite power and authority to enter into the Agreement and to perform its obligations hereunder, and the execution of the Agreement, and (iii) it has been duly authorized to consummate the transactions contemplated in the Agreement.

15. ***Marketing.*** Denovo is allowed the nonexclusive use of the Customer's name, logo, trademarks, and service marks on Denovo's sales and marketing materials for presentation to current and prospective customers. Upon the Customer's request, Denovo will provide the Customer a copy of any such marketing materials in which the Customer is referenced. Notwithstanding the foregoing, Denovo will request written permission from Customer to use Customer's name, logo, trademarks, and service marks on Denovo's website or in media releases.

16. ***Law and Regulation.*** Each Party shall be responsible for obeying Laws applicable to its business, including, without limitation, data privacy, intellectual property, employment, and tax laws.

17. ***Change Order Process.*** A Change Order Request is the method by which either Party may communicate and eventually effectuate Changes to the Services outlined in the applicable SO or SOW. The Customer or Denovo may request Changes by initiating the Change Order process. To initiate the Change Order process, the Party requesting the Change must fill out the then-current Change Order Request form and submit it to the appropriate project leader of the other Party. The Change Order Request must at a minimum describe the requested Change in sufficient detail for Customer and Denovo to make a reasonable assessment of the request.

    a. The Customer and Denovo will review the CO promptly and follow up with each other as necessary for further clarification or to discuss the impact that the Change will have on the Services, deliverables, implementation schedule, Service Levels, terms and conditions, Fees, and other provisions of the Agreement. A CO will not be effective, nor will a Change be implemented unless the CO is executed by duly authorized representatives from both Customer and Denovo.

    b. Upon mutual acceptance of the CO, it becomes part of the entire Agreement between Denovo and Customer with respect to the subject matter thereof.

    c. Each Party will be responsible for all costs and expenses incurred by it in participation of the CO process unless otherwise agreed in writing. The failure of either Party to insist upon strict performance of the CO process for every Change shall not constitute a waiver of its rights as set forth in the Agreement, at law or equity.

17. ***Miscellaneous.***

    a. ***Modification.*** The Agreement may not be modified or amended except by a written instrument executed by or on behalf of each of the Parties to the Agreement which specifically states that it amends the Agreement.

b. ***Waiver.*** The failure of either Party to insist upon strict performance of any of the provisions contained in the Agreement shall not constitute a waiver of its rights as set forth in the Agreement, at law or in equity, or a waiver of any other provisions or subsequent default by the other Party.

c. ***Survival.*** The provisions of Sections 1, 2, 4, 6(c), 8, 9, 10, 11, 13, 15, and 17 shall survive, notwithstanding the termination or invalidity of the Agreement for any reason.

d. ***Entire Agreement.*** The Agreement, including, without limitation, any addenda, exhibits, attachments, supplements, SOs, SOWs, Change Orders and schedules, constitutes the entire agreement between Denovo and the Customer with respect to the subject matter hereof and supersedes all other oral and written representations, understandings or agreements relating to the Agreement.

e. ***Force Majeure.*** Except for payment of money, neither Party shall be liable for any delays or other non-performance resulting from circumstances or causes beyond its reasonable control, including, without limitation, acts, or omissions of the other Party or third parties, fire or other casualty, act of God, strike or labor dispute, war or other violence, or any law, order or requirement of any government agency or authority.

f. ***Notices.*** Wherever under the Agreement one Party is required or permitted to give notice to the other Party, such notice shall be in writing and shall be delivered personally, sent by facsimile transmission, sent by nationally recognized express courier, sent by certified mail (return receipt requested), or sent by email. Any such notice shall be deemed given when actually received and shall be addressed as follows:

If to Customer:	If to Denovo:
Attention: Edward J. Duran; ITT EAS/EUS Manager Email: ejduran@santafenm.gov City of Santa Fe ITT 200 Lincoln AVE Santa Fe, NM 87501	Attention: Legal Department Email: legal-notices@denovo-us.com Denovo Ventures, LLC. 371 Centennial Parkway Suite 200 Louisville, CO 80027 **With a copy to:** Attention: Andrew Roberts Email: andrew@sloanandroberts.com Sloan & Roberts, PLLC 5151 Belt Line Road, Suite 1050 Dallas, Texas 75254-6738 Phone: 214-987-6070 Fax: 214-987-6071

Either Party may change its address for notices upon giving written notice of the change to the other Party in the manner provided above.

g. ***No Third-Party Beneficiaries.*** Nothing contained in the Agreement is intended to confer upon any person (other than the Parties hereto, , and any subcontractors expressly mentioned elsewhere in the Agreement) any rights, benefits or remedies of any kind or character whatsoever, and, except as otherwise specifically stated herein, no person shall be deemed a third-party beneficiary under or by reason of the Agreement.

h. ***Counterparts.*** The Agreement may be executed in two (2) or more counterparts, each of which shall be deemed to be an original, but all of which together shall constitute one agreement binding on the Parties, notwithstanding that both Parties are not signatories to the original or the same counterpart. A facsimile or other electronic copy of a signature on the Agreement shall be acceptable as and deemed to be an original signature.

i. ***Severability.*** If any term or condition of the Agreement or the application thereof to any person(s) or circumstances is held invalid, such invalidity shall not affect other terms, conditions or applications which can be given effect without the invalid term, condition, or application. To this end, the terms and conditions of the Agreement are declared severable.

j. ***Governing Law; Jurisdiction.*** The Agreement shall be governed by, and construed in accordance with, the laws of the State of New Mexico (without giving effect to the choice of law principles thereof). To the extent any claim or dispute is not required to be submitted to binding arbitration under the terms of the Agreement, each Party hereby irrevocably consents and waives any objection to the personal jurisdiction and venue of the state and federal courts for the City and County of Santa Fe, New Mexico.

k. ***Legal Representation and Construction of Agreement.*** The Parties acknowledge that the Agreement was prepared by counsel for Denovo. The Parties have had the opportunity to retain their own independent legal and financial counsel with respect to the negotiation of the Agreement. They have independently, separately, and freely negotiated each and every provision of the Agreement as if all Parties drafted it, and therefore, waive any statutory or common-law presumption that would serve to have this document construed in favor of, or against, any Party.

l. Addendum. The terms and conditions attached as Addendum "A" are incorporated by reference, as if fully set forth in this Agreement.

IN WITNESS WHEREOF, Denovo and Customer have executed this Master Services Agreement as of the last date set forth below.

City of Santa Fe

By: _____

Name: Alan Webber

Title: Mayor

Date: Oct 3, 2023

DENOVO VENTURES, LLC

By: DocuSigned by: David MacGrandle

Name: David MacGrandle

Title: Chief Financial Officer

Date: 9/1/2023

Denovo

City of Santa Fe ADDENDUM

This Addendum is incorporated into the Master Services Agreement between DENOVO (DENOVO) and the CITY OF SANTA FE (CITY).

1. TERMINATION

This Agreement may be terminated by CUSTOMER upon 30 days written notice to the DENOVO in accordance with the terms of the Appropriations section below.

2. NEW MEXICO TORT CLAIMS ACT

Any liability incurred by CUSTOMER in connection with this Agreement is subject to the immunities and limitations of the New Mexico Tort Claims Act, Section 41-4-1, et. seq. NMSA 1978, as amended. CUSTOMER and its "public employees" as defined in the New Mexico Tort Claims Act, do not waive sovereign immunity, do not waive any defense and do not waive any limitation of liability pursuant to law. No provision in this Agreement modifies or waives any provision of the New Mexico Tort Claims Act.

3. APPROPRIATIONS

The terms of this Agreement are contingent upon sufficient appropriations and authorization being made by CUSTOMER for the performance of this Agreement. If sufficient appropriations and authorization are not made by CUSTOMER, this Agreement shall terminate upon written notice being given by CUSTOMER to DENOVO. The CUSTOMER's decision as to whether sufficient appropriations are available shall be accepted by DENOVO and shall be final.

4. RELEASE

DENOVO, upon acceptance of final payment of the amount due under this Agreement, releases the CUSTOMER, its officers and employees, from all liabilities, claims and obligations whatsoever arising from or under this Agreement. DENOVO agrees not to purport to bind CUSTOMER to any obligation not assumed herein by CUSTOMER unless DENOVO has express written authority to do so, and then only within the strict limits of that authority.

Signature Lines required:

City of Santa Fe:

Alan Webber, Mayor

Date: Oct 3, 2023

DENOVO:

DocuSigned by:
David MacGrandle
3333F72E6DE74D7...

David MacGrandle, CFO

Date: 9/1 /2023

Attest:

Geralyn Cardenas (Oct 3, 2023 13:45 MDT)

Kristine Bustos Mihelcic, City Clerk XIV

GB MTG 09/27/2023

City Attorney's Office:

Marcos Martinez

Marcos Martinez (Aug 30, 2023 16:22 MDT)

Senior Assistant City Attorney

Approved for Finances:

Emily K. Oster

Emily K. Oster (Oct 3, 2023 12:22 MDT)

Emily Oster, Finance Director

Denovo

SERVICE ORDER 001
Cloud Managed Application Services

Customer:	City of Santa Fe	**Contact:**	Edward J Duran
Address:	200 Lincoln Ave	**Phone Number:**	858-914-1934
City, State, Zip:	Santa Fe, New Mexico 87501	**Email Address:**	ejduran@santafenm.gov
MSA Referenced:	September 1, 2023	**Initial Term:**	48 Months
Effective Date:	10/1/2023	**Successive Term:**	Not Applicable
Pricing Valid Through:	09/30/2023		

This Service Order ("SO") is by and between Denovo Ventures, LLC. ("Denovo") and City of Santa Fe ("Customer" or "Client") (each a "Party" and collectively the "Parties") and is subject to the terms and conditions of the Master Services Agreement ("MSA") referenced above that has been executed by the Parties.

The Initial Term will begin on October 1st, 2023.

1. ***Service Entitlements***

   a. The Customer Applications and Service Descriptions are defined in Exhibit A. Specific Customer service selections and service units are set forth in the Attachments to Exhibit A. For the avoidance of doubt, if not expressly set forth in the Attachments to this Service Order as being provided by Denovo, Denovo is not obligated to provide such Services.

   b. Denovo's Standard Operating Processes, Service Level Agreements, Service Level Credits, and Other Terms are defined in Exhibit B.

   c. Denovo's Implementation and Onboarding Plan is provided in Exhibit C.

2. ***Service Fees and Pricing***

   a. The one-time Provisioning Fee of twenty-nine thousand seven hundred dollars ($29,700.00) is payable upon execution of this SO as consideration for Denovo providing the service resources and configuring the tenancy services for Customer as needed to establish Customer's Cloud Services environment.

   b. The minimum monthly Service Fee is: for the months of October 2023 and November 2023, fourteen thousand, three hundred sixty three dollars ($14,363), and (ii) for the months of December2023 through June 2027, twenty five thousand five hundred twenty-six dollars ($25,526.00).The minimum Monthly Service Fee is payable quarterly in advance during the Initial Term and any Successive Term, beginning October 1, 2023 and includes charges for the entitlements set forth herein. Any additional monthly Service Fees specified apply, respectively, on a monthly basis, to any usage for that month above those included entitlements.

   c. The minimum monthly Service Fee includes all of the Entitlements set forth in Attachment A including the initial Entitlement for Enhancement Services.

   d. A one-time Relicensing Fee of thirty-seven thousand seven hundred seven dollars and seventy-seven cents ($37,707.77) is payable upon execution of the Service Order. This Relicensing Fee will be waived if Customer executes this SO by September 30, 2023.

e. Customer will: (i) reimburse Denovo for all shipping, printing, copying, and other incidental services reasonably incurred by Denovo in providing the Services requested by Customer at cost; and (ii) pay Denovo, at agreed rates, for other additional expenses and services, including, but not limited to, travel (which shall be reimbursed based on Denovo's Travel Policy), hourly additional support or consulting services, remedy of Customer procedural use errors, additional telecommunications carrier charges provided by Denovo, all as may be agreed in advance by the Customer and Denovo ("Other Charges") and in accordance with the MSA. Other Charges shall be payable monthly, in arrears.

f. All Application Service Fee prices shall increase annually as of each anniversary of the Effective Date by the percentage increase in the Consumer Price Index – All Urban Consumers of the Bureau of Labor Statistics of the U. S. Department of Labor for U.S., for All Items with Base Years 1982-84=100 (the "CPI-U Index") over each such annual period. Those annual increases will be measured from the month for which the most recent index results are published at the time of adjustment.

g. At the conclusion of the Initial Term, Customer may, at its sole discretion (i) convert the Services to a ten (10) named user, read-only, archive environment, or (ii) renew this SO for a Successive Term at the then current minimum Monthly Service Fees; or (iii) terminate this SO. Options (i) and (ii) above require sixty (60) days' advance notice to Denovo, which shall be given through email or other written means. Should Customer elect to convert the Services under option (i) above, the archive environment, the minimum monthly Service Fee price shall be seven thousand four hundred fifty dollars ($7,450.00) per month which may have been adjusted from time to time as contemplated by the Agreement.

3. *Total Compensation*

The table below outlines the total compensation for Customer fiscal periods excluding GRT.

Description	FY24	FY25	FY26	FY27	Total
	Oct 2023 - June 2024	July 2024 - June 2025	July 2025 - June 2026	July 2026 - June 2027	
Onboarding Fees	$29,700	$0	$0	$0	$29,700
Monthly Service Fees	$207,408	$306,312	$306,312	$306,312	$1,126,344
Grand Total	**$ 237,108**	**$ 306,312**	**$ 306,312**	**$ 306,312**	**$1,156,044**

TOTAL COMPENSATION:

October 1, 2023 City of Santa Fe (FY24): $29,700.00 Implementation Fee
October and November 2023 (FY24): $14,363.00
December 2023 through June 2027 (FY24): $25,526.00
City of Santa Fe (FY24): $207,408 Nine Month Total
October through June, 2023 City of Santa Fe (FY24): $28,800.00 Monthly Service ($3,200/Month)
October 1, 2023 City of Santa Fe (FY24): $37,707.77 Waived if Signed by September 30, 2023

Total Compensation October 1, 2023, FY24: $305,797.00
Waived Fee on Licensing if Signed by September 30, 2023: ($37,707.77)

TOTAL FY24 COMPENSATION: $343,504.77 Excluding GRT

Compensation Year 2
July 1, 2024 City of Santa Fe (FY25): $306,312.00
July 1, 2024 City of Santa FE (FY25): $38,400.00

Denovo

TOTAL FY25 COMPENSATION: $344,712.00 Excluding GRT

Compensation Year 3
July 1, 2025 City of Santa Fe (FY26): $306,312.00
July 1, 2025 City of Santa FE (FY26): $38,400.00

TOTAL FY26 COMPENSATION: $344,712.00 Excluding GRT

Compensation Year 4
July 1, 2026 City of Santa Fe (FY27): $306,312.00
July 1, 2026 City of Santa FE (FY27): $38,400.00

TOTAL FY27 COMPENSATION: $344,712.00 Excluding GRT

Total compensation four-year term not to exceed: $1,377,640.77 Excluding GRT

IN WITNESS WHEREOF, Denovo and Customer have executed this SO as of the date set forth above.

City of Sante Fe By:	**DENOVO VENTURES, LLC** DocuSigned by: By: David MacGrandle
Name:	Name: David MacGrandle
Title:	Title: Chief Financial Officer
Date:	Date: 9/1/2023

Exhibit A
Service Description

1. ***Service Description***

Denovo will provide Customer with the Services as set forth in this SO. The Services are solely for use in accordance with the MSA by those persons identified by Customer who are authorized to use the Services ("Named Users"), in return for the consideration specified. Applicable limitations to the selected Services entitlements are set forth in the Attachments to this Service Description. For the avoidance of doubt, if not expressly set forth in the Service Entitlements or the Attachments to this Service Description as being provided, Denovo is not obligated to provide such Services.

1.1 Cloud Services.

i. Denovo will provide remote access to compute services, system software, communications, network services, and data storage such that Customer may perform their business operations using service resources described in this Service Description (the "Application" or the "Applications"). Except as otherwise indicated on those Attachments, Customer is responsible for licensing the Applications and supplying them to Denovo to be used in the provision of the Services.

ii. Denovo will select, provide, provision, and operate the computing hardware, system software, data storage, and other resources needed to make the Applications available to Customer at facilities selected and provisioned by Denovo (the "Cloud Service Resources"). Applicable limitations to the Cloud Services entitlements are set forth in the Attachments to this Service Description. Usage in excess of such entitlements will be provided at those fees for the applicable Cloud Service Resources which shall be specified in the Attachments to this Service Description.

iii. Denovo will be responsible for procuring and administering maintenance for the Cloud Service Resources. Changes made to products or release levels used in the Cloud Services will be completed in accordance with Denovo Change Enablement Services (defined herein).

1.2 Operations Services.

i. Denovo will operate the Cloud Service Resources at all times and on all days. The Applications supported by those Cloud Services Resources will be scheduled to be available to Customer at all times, except for when system maintenance may be conducted within the Maintenance Services Period (defined below). Customer's ability to access the Applications will be monitored continuously, with the exception of any "Maintenance Time".

ii. Denovo will perform Operations Services at all times and on all days. Operations Services consist of: (i) remedial and preventative maintenance of the Cloud Service Resources designed to minimize the occurrence and duration of any service degradation or interruption; (ii) responding to alerts generated by monitoring and surveillance, (iii) responding to service desk cases submitted by any Named User regarding problems with the Cloud Services Resources or problems completing tasks which previously completed successfully, and (iv) responding to Customer service requests.

iii. As part of its Operations Services, Denovo will review and manage the Applications at all times, on all days to maintain the configuration, integration, availability, performance, and stability of the Applications. Denovo shall provide incident resolution for performance problems, operations issues, and errors. These Services may also include (i) incident management, (ii) maintenance acitivities, (iii) monitoring, (iv) performance management, (v) code refreshes and data copies, and (vi) operations reporting.

iv. Denovo Operations Services includes the implementation of vendor-provided modifications and remedial "Patches" to address reported or discovered functionality problems. Denovo implements Patches in accordance with its Change Enablement Services in a commercially reasonable timeframe following its receipt of those Patches. Customer is responsible for separately procuring vendor-provided maintenance of the Customer provided Applications under terms permitting Denovo to request, receive, and administer that maintenance on Customer's behalf.

v. When authorized and enabled by Customer, and with Customer's assistance as may reasonably be required, Denovo will escalate Application software issues to the software provider and will manage thoses issues through resolution.

1.3 Database Support Services.

i. Denovo will install, configure, manage, and monitor relational databases, including those database administration tasks required to ensure the database fully meets the requirements of the Operations Services. Denovo will manage the physical database schema, structure, data definition, and database objects.

ii. Denovo will be responsible for administering maintenance as required to support the Database Operations Services. Changes made to products or release levels used in the Database Operations Services such as applying database patches, creating new instances, and stopping and starting database services will be completed in accordance with Denovo Change Enablement Services (defined herein).

1.4 Customer Support Services.

i. Customer will designate at least one (1) Service Coordinator. The Service Coordinator will designate those Customer personnel who are to be Authorized Contacts for the Customer Support Services. The Service Coordinator will promptly update designations for changes in the Authorized Contacts or to the extent of their access. Denovo will complete the following actions promptly, when properly requested by the Service Coordinator: (i) additions, deletions, or changes to Customer's list of "Authorized Contacts" (as defined above) and (ii) declarations of "Critical Processing Periods" (as defined below).

ii. Denovo will provide a Service Desk service staffed at all times and on all days. Denovo will receive and address all incident reports, service requests, and other adminstrative matters submitted to the Service Desk through accordance with the Service Level Targets.

1.5 Data Storage and Protection Services.

i. As set forth in this Service Description and its attachments Denovo will make available to Client appropriate data storage on which to store and maintain Applications data for use with the Applications.

ii. Denovo will create and manage backup copies of Applications data and software used in the Services in accordance with Denovo data backup and protection procedures associated with each Client workload. Data Storage and Protection Services include the offsite storage of backup copies of Applications data.

iii. Backup and data protection processes shall be conducted as to not impact the performance or processing of the Applications, or at a time mutually agreed upon by the Parties. Any applicable limitations to the Service Resources entitlements are set forth in the Attachments to this Service Description.

1.6 Security Services.

i. As set forth in this Service Description and its attachments Denovo will provide managed information security services. Denovo will provide the security tools, personnel, practices and policies to manage security.

a. Provide security services focused on prevention, mitigation, and recovery.
b. Manage perimeter / network security, firewall systems, and network intrusion detection systems.
c. Provide and manage vulnerability scanning of server instances and critical perimeter infrastructure including firewalls, routers, proxy and load balancers per Denovo standard operating procedures.
d. Provide host-based intrusion prevention and detection for internet facing server instances.
e. Provide and manage system anti-virus and malicious code prevention for all Microsoft Windows server instances.
f. Provide and manage host-based intrusion prevention and intrusion detection for all Linux / Unix server instances.
g. Provide and manage internal vulnerability scanning of server instances per Denovo standard operating procedures. Vulnerability scanning is performed continuously, consistent with the capabilities of the chosen service.
h. Provide security monitoring and continuous improvement using security related logs from firewalls, routers, intrusion detection, logs, and events.

1.7 Change Enablement Services.

i. Denovo will follow its defined Change Enablement Process in completing changes to the Services. This may include changes to products or release levels used in the Services. This may also include installing and implementing Application Patches ("Change Management Services").

ii. The Change Enablement Process will in include, at a minimum: (i) advance notification to the Service Coordinator of the change to be conducted, its work steps and expected timetable; (ii) preparation of a written change management plan which identifies the specific change, the Services components affected by the change, Denovo and Customer testing steps, a risk assessment, a recovery or back-out plan to include risk mitigation measures, (iii) submission of the change management plan to the Denovo Change Approval Board for approval prior to implementation; (iv) testing of changes in non-production environments or, if not practical, during time periods as approved by Customer; (v) coordination of the implementation of the change with the Service Coordinator; (vi) verification of the successful completion of the change with the Service Coordinator; and (vii) posting the results of the change to Denovo service management systems.

1.8 Maintenance Services.

i. Denovo will use its commercially reasonable and diligent efforts to perform maintenance on the Applications during the hours and days agreed to by Customer and set forth in this Service Description and its Attachments (the "Maintenance Services Period"). Denovo will notify Customer in accordance with its Change Enablement Services and then perform the specified maintenance on the Applications ("Maintenance Time").

ii. Denovo will provide advance notice of its planned activities during the Maintenance Services Period through its customer support procedures. Customer will be notified of the complete of the Maintenance Services by Denovo after those Applications used by the Customer have successfully completed validation and testing.

1.9 Functional Support Services

i. Functional Support Services consist of responding to Customer issues and questions regarding the functioning and use of the Applications and Cloud Services as submitted by Customer's "Authorized Contacts". The Service does not include the development or implementation of new functionality, new business locations, new business units, or new reports, programs, or objects.

ii. Denovo will provide the Functional Support Services through its Service Center ("SC") from 6:00 AM to 6:00 PM, Mountain Standard Time, Monday through Friday (the "Functional Support Hours"). The Service Coordinator (defined below) will provide Denovo with the names of up to five (5) Customer employees who have a substantial level of functional and procedural knowledge regarding Customer's use of the Applications. Functional Support Services are not provided on Denovo's holidays (which will not number more than ten (10) per calendar year).

iii. Denovo will complete the following actions promptly, when properly requested by the Service Coordinator: (i) additions, deletions, or changes to Customer's list of "Authorized Contacts" (as defined above) and (ii) declarations of "Critical Processing Periods" (as defined below).

iv. Critical Processing Periods. When notified by Client of occasions where Client is engaged in using the Services for critical business processes involving special efforts by Client including, but not limited to, such matters as acquisition activities, special payroll periods, fiscal year closes ("Critical Processing Periods"), Denovo will: (i) notify its operations and support personnel of those special efforts; (ii) avoid maintenance and downtime during that Critical Processing Period; and (iii) accelerate the response to incidents and service requests arising during that Critical Processing Period. The efforts of Denovo are subject to the availability of resources and Denovo's need to staff appropriately for its business generally. Client will promptly notify Denovo once the need for a Critical Processing Period is identified. Denovo reasonably expects Client to provide five (5) business days' notice in advance of a Critical Processing Period and expects that a Critical Processing Period shall not be more than forty-eight (48) hours in duration. Client will identify Critical Processing Periods only for events outside of typical, day-to-day performance of Client's work. Client is entitled to four (4) Critical Processing Periods per year.

1.10 Lifecycle Management Services.

i. Application Lifecycle Management Services consist of applying Technical Upgrades and Application Upgrades including database and operating system updates as required for the Applications. The request for such Services will be submitted by Customer's "Authorized Contacts"). These Services are scheduled based on availability. Typically, these Services must be scheduled sixty (60) days in advance.

ii. Denovo will perform "Technical Upgrades" consisting of new run time services (e.g., tools, environments) releases or versions of the run time services or supporting software issued by the vendor of that Application as part of its maintenance offering, typically indicated by a change in the numeric identifier of that run time services software. Denovo will apply Technical Upgrades in accordance with the Change Enablement Section of this Service Description. Customer is responsible for separately procuring vendor-provided maintenance of the Applications to be supplied by it under terms permitting Denovo to receive and administer that vendor-provided maintenance on Customer's behalf.

iii. Application Upgrades. Denovo will perform "Application Upgrades" consisting of functional programs (e.g., general ledger, payroll) releases or versions of the Application functional software issued by the vendor of that Application as part of its maintenance offering, typically indicated by a change in the numeric identifier of that Application software. Denovo will apply Application Upgrades in accordance with the Change Management Section of this Service Description.

Denovo Confidential Information – Subject to Non Disclosure

iv. Customer is responsible for separately procuring vendor-provided maintenance of the Applications to be supplied by it under terms permitting Denovo to receive and administer that vendor-provided maintenance on Customer's behalf. Denovo is responsible for procuring and administering vendor-provided maintenance for any Applications to be supplied by Denovo.

v. Notwithstanding anything to the contrary contained herein or otherwise, Denovo will not be required to provide Customer with Lifecycle Management Services as provided in this Agreement if there are less than six (6) months remaining in the then current Term.

vi. The Service includes the project management, application technical (e.g., JD Edwards CNC, and at a minimum application net change training, and support for issues resolution. The Service may include application testing support and development retrofit support. If these Services are included, they will be defined in the Entitlements.

1.11 Disaster Recovery Services.

i. Disaster Recovery Services are invoked when an unplanned event or condition renders Denovo unable to provide the Cloud Services. Disaster Recovery Services provide for restoration of the Services as set forth in this Service Description through an encrypted network connection. The Recovery Time Objective ("RTO") defines the target amount of time that the Applications remain unavailable. The Recovery Point Objective ("RPO") represents the target point in time, prior to a Contingency Event, to which data can be recovered.

ii. Denovo will provide Disaster Recovery Services for the then current version of the Applications, excluding any elements that were in development or testing. In addition to the other services specified in this SOW, Disaster Recovery Services include monitoring and management of the target environment to include data replication management, synchronization management, audit reports, data latency and performance management, and internal testing and validation checks.

iii. With Client or in conjunction with other Clients, Denovo will schedule and conduct one (1) test per year of the Disaster Recovery Services. This will include the execution of failover if requested by Client, assist Client with validation of solution to include application functionality, record counts, etc., creation and management of Disaster Recovery Plan.

1.12 Enhancement Services.

i. Enhancement Services consist of assisting Customer with the implementation or use of functionality, application development, consulting services, and technology services for the Applications. The request for such Services will be submitted by Customer's Service Coordinator(s) or an Authorized Contact.

ii. Enhancement Services are based on Customer's commitment to consume the Service Entitlement during each calendar quarter (the "Quarterly Period"). Customer and Denovo shall use their commercially reasonable and diligent efforts to request and perform the services accordingly.

iii. Services consumed in excess of those entitled during any Quarterly Period Customer will be billed at the hourly rate defined Attachment 1 to this Service Description.

iv. Denovo shall provide a quarterly summary of Service Entitlements and the consumption of those Service Entitlements (the "Quarterly Report"). Each quarterly report shall include a summary of the items which consumed the Application Enhancement Services. This summary shall be provided to Customer promptly, through email or other written means.

1.13 Service Management.

i. Run Book. Denovo will create process documentation and procedures for the Services (the "Run Book"). These procedures will be reviewed periodically, or upon the mutual written agreement of the parties, and may be updated throughout them.

   a. The Run Book shall include, but is not limited to:

      1) Operational communication and process between Customer and Denovo teams.
      2) Customer support procedures to include reporting, escalation, and contact information.
      3) Key support roles to include Service Coordinators and Authorized Callers.
      4) Service Desk logging, ticketing, management, and reporting.
      5) Change Enablement communication and coordination.
      6) Data protection, backup, and restoration procedures.

   b. The parties agree that the Run Book will be materially complete ninety (90) days after the 'go live' or conversion to Denovo production services.

ii. Service Reviews. Customer and Denovo shall meet periodically at a manager or higher level to review matters related to their relationship and this Service Description ("Service Reviews").

   a. Service Reviews shall include, but are not limited to:

      1) Executive stakeholder alignment, performance review, and Customer goals review.
      2) Application and platform service availability.
      3) Activities review to include incident trends and service request trends.
      4) Professional services resources open projects.
      5) Recommendations for improvements in the delivery and use of the Services.
      6) Service Fees and charges.
      7) Pending renewal decisions.

   b. Unless waived at the sole discretion of Customer as indicated through email or other written means, the parties agree that the Service Reviews will be begin ninety (90) days after the 'go live' or conversion to Denovo production services.

1.14 End User Services.

i. Denovo will provide workstation and / or desktop management, monitoring, patching, and imaging as may reasonably be required for Customer's business purposes.

ii. Incidents and service requests related to these workstation / desktop services shall be accessed through the SDaaS functions defined herein.

iii. Customer and Denovo will proceed in good faith to define the catalog of services and the required response time for each service catalog item (e.g., reimaging a desktop or workstation).

iv. The Services include but are not limited to:

   a. Address Customer requests for installation, configuration, test, maintenance of workstation / desktop hardware and software components.

   b. Analyze and troubleshoot Customer workstation / desktop hardware and software problems.

c. Perform root cause analysis of equipment problems and provide effective diagnosis.

d. Respond to Customer requests in a timely and accurate manner

e. Maintain documentation of Customer standards, issues, and appropriate resolutions.

f. Provide support to Customer in system upgrades, installing workstations, and other office automation tools. On site activities shall generally be accomplished through the provision of Customer personnel as "remote hands".

g. Escalate complex issues to appropriate teams for resolution.

v. Patching is assumed to be done using automated tools and utilities.

vi. Monitoring of workstations and desktop computers includes basic device health and hygiene, including monitoring the presence and currency of endpoint detection software and services.

1.15 Network Managed Services (WAN).

i. Denovo will provide support for Customer wide area network, including Customer on premise equipment that directly enables that wide area network, including monitoring, patching, and updating as may reasonably be required for Customer's business purposes.

ii. Incidents and service requests related to these wide area network managed services shall be accessed through the SDaaS functions defined herein.

iii. Customer and Denovo will proceed in good faith to define the catalog of services and the required response time for each service catalog item (e.g., modifying a firewall rule).

iv. The Services include but are not limited to:

a. Address Customer requests for installation, configuration, test, maintenance of wide area network hardware and software components.

b. Analyze and troubleshoot Customer wide area network hardware and software problems.

c. Perform root cause analysis of equipment problems and provide effective diagnosis.

d. Respond to Customer requests in a timely and accurate manner

e. Maintain documentation of Customer standards, issues, and appropriate resolutions.

f. Provide support to Customer in wide area network upgrades, installing hardware, and other network management tools and utilities. On site requirements shall generally be accomplished through the provision of Customer personnel as "remote hands".

g. Escalate complex issues to appropriate teams for resolution.

v. Monitoring of wide area network devices includes basic device health and hygiene, including monitoring the critical capabilities of the devices.

vi. Operations Services for Microsoft Office 365 and telephone / public branch exchange (PBX) support are included on End User Support Services.

Denovo

1.16 Service Desk Services.

i. From its Service Desk or Customer Support Center, staffed on all days, at all times Denovo will:

   a. Respond to incidents and service requests.

   b. Develop with Customer response and escalation criteria based on the ITIL framework and Customer's assessment or designation of Customer impact and urgency.'

   c. Appropriately perform incident management activities consistent with the processes and procedures agreed to by the parties.

   d. Follow operator instructions as provided by Customer to remediate alerts and incidents.

   e. Escalate incidents to Customer personnel consistent with an escalation matrix published by Customer and updated from time-to-time.

ii. The services included in this Section 2.15 constitute the Service Desk Services ("SDaaS"). For the avoidance of doubt the SDaaS Services are applicable to all entitlements that are elected by Customer and to which Customer is entitled in this SO.

Denovo

Exhibit B
Standard Operating Procedures / Service Levels / Other Terms

Denovo's Standard Operating Procedures, Service Level Agreements, and Service Level Credits are defined below.

1. ***Customer Support Procedures***

   i. Authorized Customer users will communicate issues via phone or Customer Care Portal to the Service Desk by creating (or causing to be created) a support case. Each support case will be assigned a ticket number for tracking.

   ii. At the time Denovo accepts a support case, Denovo will record an initial severity level of the support case based on the severity definitions included in the table below. Customer may reasonably increase the priority of incidents and service requests based on its assessment and explanation of the impact and urgency of those incidents and service requests.

   iii. If, during the service process, the support case no longer warrants the severity level currently assigned based on its current impact on the production systems, then the severity level will be adjusted to the severity level that most appropriately reflects its current impact.

   iv. Customers shall ensure that the assignment and adjustment of any severity level designation is accurate based on the current impact and urgency to business processing on the production systems. Customer acknowledges that Denovo is not responsible for any failure to meet performance standards caused by Customer's intentional misuse or misassignment of severity level designations.

   v. Denovo personnel receiving the support case will communicate with the Customer promptly upon receipt that they have been assigned the Service ticket and are engaged to respond to and resolve the issue. This may result in the exchange of dialog / emails to further understand the issue. The support case will be worked according to Customer support tiers described below.

   vi. Once a support case is resolved, it will be documented in the Denovo service desk and communicated to the individual who requested the support case. Customer will promptly use its reasonable efforts to confirm that the service case is resolved and, as appropriate, indicate to Denovo that the service case may be closed.

2. ***Service Level Agreement (SLA) – Service Desk Response and Resolution Target***

   i. Service Desk Services. The following Service Level Targets apply with respect to the following types of Service Desk Cases affecting Production Services, provided that the inability to access or use is not caused by a software failure or malfunctions or events which are outside Denovo's Immediate Control (as defined below):

Issue Definition	Priority	Service Level Targets
The inability for a majority of the Named Users to access or use one (1) or more of the Applications through the Services for a period longer than five (5) consecutive minutes due to the failure of a service resource or component not caused by Customer's unauthorized or improper use. Customer and Denovo will participate in discussions regarding the cause and effect of each such incident to identify appropriate preventative, risk mitigation, and similar responsive measures.	Priority One (1)	Denovo (i) will respond to Customer within fifteen (15) minutes after Customer reports a Priority One (1) incident and (ii) will target resolution of the Priority One (1) incident within two (2) hours following that report.
The inability of more than one (1) Named User to access or use one (1) or more of the Applications through the Services for a period longer than five (5) consecutive minutes due to the failure of a service resource or component not caused by Customer's unauthorized or improper use or (ii) existing Application functionality does not operate properly for a critical Customer business function due to the failure of a service resource or component not caused by Customer's unauthorized or improper use.	Priority Two (2)	Denovo (i) will respond to Customer within one (1) hour after Customer duly reports a Priority Two (2) incident and (ii) will target resolution of the Priority Two (2) incident within eight (8) hours following that report.
The verified occurrence in which Service response time is slow, accessibility is materially restricted for a period longer than five (5) consecutive minutes, or existing Application functionality does not operate properly due to the failure of a service resource or component not caused by Customer's unauthorized or improper use.	Priority Three (3)	Denovo (i) will respond to Customer within twelve (12) hours after Customer reports a Priority Three (3) incident and (ii) target resolution of the Priority Three (3) incident within twenty four (24) hours following that report.
A request for functional assistance with an application (subject to Customer entitlements), or other requests related to the performance of the Services by Denovo, excluding administrative requests.	Priority Four (4)	Denovo (i) will respond to Customer within twenty-four (24) hours after Customer reports a Priority Four (4) incident and (ii) will target resolution of the Priority Four (4) incident within forty-eight (48) hours following that report.

ii. Service Desk Priority is based on Customer's good faith assessment of impact and urgency in accordance with the Issue Definition in the table above.

iii. All service requests will be entered as a Priority Four (4) and will be subject to Denovo scheduling the Service. Administrative requests will be responded to promptly by Denovo.

3. *Service Level Agreement (SLA) – Cloud Application and Platform Services*

For Cloud Services in Denovo Private Cloud the following Service Levels will apply.

i. Commencing at the conversion or 'go live' date (defined as the date Customer accepts the Services and those Services are materially used by Customer in production business operations) and provided that Customer remains in compliance with the terms and conditions of the Agreement, Denovo will provide Customer with the Services in adherence with the Service Level Targets and procedures set forth herein.

ii. Commencing at Denovo's activation of the Customer's environment but excluding any time during which the Services or any Services Resources are not available for Maintenance Services, Denovo will make available the Service(s) described in this service Description, ninety-nine and one-half percent (99.5%) or greater, of the time in any calendar month during the Term of this Service Description ("Service Availability").

iii. Service Availability is calculated as the total number of minutes in the calendar month less the total number of minutes that the Applications are not available in that month, divided by the total number of minutes in the calendar month. For the absence of doubt this is:

$$\frac{\text{Total Minutes in Month} - \text{Minutes Not Available}}{\text{Total Minutes in Month}}$$

iii. The availability of the Services will be measured by commercially available and Denovo developed monitoring tools and utilities. This may include the ability to use the Services as required by the Applications including sample Applications transactions within the Services.

iv. Specifically excluded from the number of minutes that the Applications are not available are (i) planned interruptions to the Services including Maintenance Time, (ii) reasons of Force Majeure (as defined in the MSA), (iii) items outside Denovo's Immediate Control (as defined below); (iii) time associated with any misuse of the Services by Client or its authorized third parties, or (iv) time associated with a service interruption caused by an external security threat.

v. "Service Availability" will incorporate and apply only to those resources, items, or events in Denovo's Immediate Control. Immediate Control is defined as Denovo's network services to the Internet Service Provider ("ISP") circuit termination in Denovo's Cloud Services. Immediate Control excludes:

a. Customer's data and content.
b. Customer's desktop computer hardware.
c. Customer's network services which allow the Customer to access the Services.
d. the delivery, performance, and functionality of Applications software, support, and services provided by third party and Application software licensors.

vii. Any periods of service interruption initiated by Denovo at the request or direction of Customer that require the Services to be temporarily unavailable are excluded from the calculation of the Service Availability.

viii. Following the end of each calendar month, Denovo measures the Service Availability for the preceding month as defined in this SOW. Denovo will provide Client with access to this information promptly, through our customer portal.

ix. This portal will provide metrics on system availability for the Services purchased under this Service Description. Upon the Customers reasonable request, Customer will have the right to receive (i) reasonably detailed existing Denovo Service Level reports and measurement data from Denovo, and (ii) additional Service Level data and reports, such as the Customer may define and Denovo may have available.

4. Service Level Credits

In the event of a failure by Denovo to meet the Service Levels Service Description at Customer's request, Denovo shall provide Service Level Credits as follows:

i. First (1st) month of missed Service Availability: One (1) day's Service Fees for the applicable month for the affected Service.
ii. Second (2nd) consecutive month of missed Service Availability: Two (2) days' Service Fees for the applicable month for the affected Service.
iii. Third (3rd) consecutive month of missed Service Availability: Three (3) days' Service Fees for the applicable month for the affected Service.

iv. Fourth (4th) consecutive month of missed Service Availability: Four (4) days' Service Fees for the applicable month for the affected Service.

v. Fifth (5th) consecutive month of missed Service Availability: Five (5) days' Service Fees for the applicable month for the affected Service.

vi. Sixth (6th) consecutive month of missed Service Availability: Six (6) days' Service Fees for the applicable month for the affected Service.

To receive a Service Level Credit Customer must request that credit in writing to Denovo Customer Support within thirty (30) days after the occurrence of the failure to meet the Service Level Target. Valid Service Level credit requests will be applied to the Customer's next monthly invoice or, if timely requested after all invoices to become due hereunder have been paid, will be refunded by Denovo to Customer within thirty (30) days after receiving that valid request.

5. Other Terms

i. Any Change implemented by Customer that could affect the performance of Denovo's tools (i.e., management, monitoring, etc.) or Denovo's ability to monitor/manage/support the environment must be agreed to by both parties, in writing, prior to implementation.

ii. Customer shall advise Denovo of applicable regulatory requirements or obligations which may affect Denovo's provision of the Services.

iii. Denovo is not responsible for any interruption of the Services caused by other activities Customer directs, denial of Service attacks, national or worldwide incidents of computer viruses, natural disasters, changes resulting from government, political, or other regulatory actions or court orders, strikes or labor disputes, acts of civil disobedience, acts of war, acts against parties (including carriers and Denovo's other vendors), and other force majeure items as set forth in the Agreement provided that Denovo utilizes commercially reasonable efforts under the circumstances to minimize the impact of the force majeure event on the Customer.

iv. Customer will not use, or permit use of, the Services in a manner, which is (i) illegal; (ii) infringes the patent, copyright, trademark, confidential information, or intellectual property rights of a third party; or (iii) violates general standards of behavior on the Internet, collectively "Service Misuse". Customer shall be responsible for any such Service Misuse and indemnify Denovo, its employees, affiliates, agents, licensors, suppliers, and subcontractors against any liabilities arising from or relating to any such Service Misuse.

v. Customer's system will have potential security vulnerabilities, even with the Services, including, but not limited to, the vulnerability of Customer's network or systems to (i) access by persons within Customer's organization which exceeds the authority granted to such persons; (ii) snooper attacks by persons granted access by Customer to its network to obtain and misuse access codes, passwords and other data; (iii) physical access to equipment at Customer sites; and (iv) access to passwords and similar information that is written down or otherwise not afforded an appropriate level of protection by Customer. Denovo does not guarantee that the Services will eliminate all risk or prevent damage from network or system security breaches such as the above.

vi. Customer will supply Denovo personnel with reasonable accommodations and any physical or online access to any Customer facilities, personnel, locations, or networks as reasonably necessary to perform the Consulting Services. If it becomes necessary for Denovo personnel to be on-site at a Customer location, Denovo will give the Customer advance notice. Denovo will obey, and will ensure that all Denovo personnel obey, whenever on site at any Customer location or any other facility that is owned, leased, or operated by the Customer or any of its affiliates, all lawful, reasonable, and applicable rules and regulations as well as the Customer's reasonable policies, standards, and procedures, as such policies

are communicated in writing by the Customer to Denovo from time to time. The Customer will have the same obligations with regard it to its personnel on Denovo premises. Such rules and policies will not operate to materially change the terms of the Agreement. Denovo and Customer will each designate a point of contact for the Consulting Services and will work together to detail necessary project plans and approaches. Notwithstanding any other provisions herein, the Customer acknowledges that Denovo's ability to provide the Consulting Services is likely to be affected if Customer does not provide the necessary access and assistance, and Denovo shall have no liability for any delays or cost increases caused by the Customer's failure to provide such access and assistance.

vii. Customer is responsible for all third-party software licensing and maintenance and agrees to comply with all applicable third-party end-user license agreements.

viii. If it is necessary for Denovo to provide Time and Materials ("T&M") Services for additional Customer network discovery, the Denovo Professional Consulting Services group will provide a separate Statement of Work that defines timelines, tasks and the services rate per hour required to complete the work.

ix. This Service Description outlines the full breadth of Services to be provided by Denovo to Customer. Any omission of pre-requisites or need for additional services shall result in a Change Order Request, or support will be best effort on a next business day basis.

x. Any requested Change to the Customer's environment once it has been implemented may be subject to additional fees.

xi. Additional Services may be added or deducted via the Change Order Request process as defined in the MSA.

xii. This service description does not include any travel or out of pocket expenses, if required, to Customer's facility.

Exhibit C
Implementation / Onboarding

Denovo will implement the Services specified in this Service Order. Our implementation methodology includes a defined set of activities and deliverables that facilitate a successful Customer onboarding. We perform these activities by leveraging our five (5) stage methodology. Our objective in this process is to execute each project stage successfully with a quality audit and formal signoff at the completion of each stage.

We estimate that the onboarding activities associated with this Service Order 001 will be complete approximately ninety (90) days after the Effective Date. The fees for the onboarding activities are included in the fees specified in Section 2. Service Fees and Pricing of this Service Order 001. Prior to the completion of the onboarding activities, Denovo shall use its commercially reasonable and diligent efforts to assist Customer with requests regarding the service components for which onboarding is not complete and accepted by Customer.

1. Planning
    a. Project Planning Workshop
    b. Technology Planning Workshop
    c. Infrastructure Planning Workshop
    d. Execute Customer Onboarding Workshop
    e. Quality Audit
    f. Stage Signoff

2. Provision
    a. Provision Required Compute for Monitoring
    b. Provision Stateless and Stateful Monitoring
    c. Execute Oracle Application Technology Assessment
    d. Execute Oracle Application Database Assessment
    e. Execute Oracle Application Functional Workshop(s)
    f. Establish Oracle Application Bellwethers (OLTP, Batch, etc.)
    g. Define Knowledge Asset / Operator Instruction Approach
    h. Create / Update Run Book
    i. Quality Audit
    j. Stage Signoff

3. Validate
    a. Execute Remediation from Oracle Application Technology Assessment
    b. Execute Remediation from Oracle Application Database Assessment
    c. Service Coordinator Definition and Assignment
    d. Validate Maintenance Window and Change Management Process
    e. Validate and Update Run Books
    f. Execute Cutover Planning Workshop
    g. Quality Audit
    h. Stage Signoff

4. Test
    a. Train Customer Service Coordinators
    b. Test Monitoring & Surveillance
    c. Test Patching
    d. Test Service Catalog Items (e.g., Password Reset)
    e. Update Run Books
    f. Quality Audit
    g. Stage Signoff

5. Deploy
    a. Change Advisory Board Processes
    b. Responsiveness Reporting
    c. Synchronous Communication Stakeholder Engagement
    d. Service Desk Surveys
    e. Update Run Books
    f. Project Closure

Denovo

Attachment A dated September 30th 10th, 2023, is attached to and made a part of the Service Order 001 Service Description dated as of September 30, 2023, by and between Denovo Ventures, LLC ("Denovo"), and City of Santa Fe ("Customer" or "Client").

1. Applications and Usage

The table below describes the Applications which will be supported by Denovo under this Service Description:

Applications / Platforms	Usage
Infrastructure and Platform Managed Services	As required for the following infrastructure and platform services: Up to five (5) iSeries logical partitions including up to: fifty-two thousand (52,000) Commercial Processing Workload (CPW), four hundred sixteen (416) gigabytes of memory, and nine (9) terabytes of direct attached, protected, block storage. Up to five (5) virtual machines including up to: six virtual CPUs (vCPUs) twenty-four (24) gigabytes of memory, and two (2) terabytes of direct attached, protected, block storage. Application Software: Licensed and provided by Customer. Database: Licensed and provided by Denovo. Hypervisor: VMware, Hyper-V / Azure Stack HCI, Oracle Linux Virtualization Manager, or IBM PowerVM licensed and provided by Denovo. Operating Systems: OS/400, Microsoft Windows, or Linux, licensed and provided by Denovo.

2. Service Entitlements, Limitations, and Options

In the table that follows:

Column 1 lists the Service Components and Options.

Column 2 Indicates whether the Service Component is included or excluded in the Services.

Column 3 lists the Service Units entitled or included in the Services.

Column 4 lists the additional monthly Service Fees that apply if more than the number of Service Units listed in Column 3 are provided at any time during the month.

Column 1	Column 2	Column 3	Column 4
Service Components and Options	Included / Excluded	Entitled Service Units	$ Per Additional Service Units
Cloud Services	Included	N/A	N/A
Operations Support	Included	N/A	N/A
Database Support Services	Included	Four (4 Database Instances	$750.00 / Additional

Column 1	Column 2	Column 3	Column 4
Service Components and Options	**Included / Excluded**	**Entitled Service Units**	**$ Per Additional Service Units**
			Database Instance or SID Managed
Customer Support Services	Included	One (1) Critical Process Period Per Calendar Quarter	$475.00 / Additional Critical Process Period Days / Calendar Quarter
Data Storage and Protection	Included	Up to eleven (11) TB of managed protected, and direct attached storage as specified above.	$250.00 / Additional TB of managed, protected, direct attached storage.
Security Services	Included	N/A	N/A
Change Enablement Services	Included	CAB Two (2) times / week. Additional as Needed for emergency changes.	N/A
Maintenance Services	Included	To be agreed to by the Parties during the Onboarding Services ("Maintenance Services Period")	N/A
Functional Support Services	Not Included	N/A	N/A
Application Lifecycle Management (ALM) Services. • Includes Development Retrofits • Includes Application Testing Support	Not Included	N/A	N/A
-		One (1) full Customer facing disaster recovery test per year.	
Disaster Recovery – Platform Managed Services: – Four (4) hour Recovery Point Objective – Twelve (12) hour Recovery Time Objective – Provided for JD Edwards World Production Environment	Included		N/A

Column 1	Column 2	Column 3	Column 4
Service Components and Options	**Included / Excluded**	**Entitled Service Units**	**$ Per Additional Service Units**
Application Environments: For JD Edwards World platforms, Denovo will provide one (1) production environment (set of runtime services) with one (1) production path code (set of objects) to be used for production (PD) services. For JD Edwards EnterpriseOne platforms Denovo will provide one (1) production environment (set of runtime services) with one (1) production path code (set of objects) to be used for production (PD) services and one (1) non-production environments (run time services), with one (1) non-production path code (set of objects) per environment, to be used for non production services.	Included	One (1) Production and Two (2) Non-production Application Environnements	$750.00 / Additional Environment and / or path code
Enhancement Services	Included	Sixty (60) Hours Per Calendar Quarter	See Enhancement Services Rate Card below.
Service Management	Included	N/A	N/A
End User Services	Not Included	N/A	N/A
Network Managed Services (WAN)	Not Included	N/A	N/A
Service Desk Services	Included	N/A	N/A
Onboarding Services	Included	As Set Forth on Exhibit C –	N/A
Telecommunications - Customer Provided Connectivity	Included	N/A	N/A
Telecommunications - Internet Bandwidth	Included	N/A	N/A
Applications Availability Target	Included	99.5%	N/A

Enhancement Services Rate Card

The Entitled Service Units for Enhancement Services is sixty (60) hours per calendar quarter beginning in October 2023. The minimum monthly Service Fee for the Enhancement Services is nine thousand six hundred dollars ($9,600.00). Beginning on October 1, 2024, and annually thereafter, Customer has the option to adjust its commitment for Entitled Service Units in accordance with the table below. Any such reduction shall adjust the minimum monthly Service Fees in accordance with the prices in that table as may be adjusted from time to time as contemplated in this Service Order.

Quarterly Enhancment Services Comitted Hours Entitlement	Entitled Service Units	Monthly Service Fees	Quarterly Service Fees	$ / Additional Service Units
Sixty (60) Hours	60	$ 3,200.00	$ 9,600.00	$ 160.00
Fifty (50) Hours	50	$ 2,750.00	$ 8,250.00	$ 165.00
Forty (40) Hours	40	$ 2,266.67	$ 6,800.00	$ 170.00
Thrity (30) Hours	30	$ 1,750.00	$ 5,250.00	$ 175.00
Fifteen (15) Hours	15	$ 900.00	$ 2,700.00	$ 180.00

Customer may exercise this option to adjust the Entitled Service Units for Enhancement Services one (1) time per calendar year, with sixty (60) days advance notice, to be received and confirmed by Denovo through email or other written means.

3. Access Methods

The Applications may be accessible through the (check as applicable):

_X_ client interfaces as supported by the Applications.
_X_ web browser interfaces as supported by the Applications.
_X_ mobile applications as supported by the Applications.
_X_ application programming interfaces (APIs) supported by the Applications.
_X_ database access including ODBC or JDBC read access.
___ other user interfaces supported by Denovo (specify): None.

4. Obligations of Customer:

Customer will acquire and provide the following items for use in connection with the Services:

All Applications, and vendor-provided maintenance for all Applications, except: None.
Other software and data: None.
Other software maintenance: None.
Hardware and other facilities: None.
Services and personnel: None.

IN WITNESS WHEREOF, the Parties hereto have executed this Agreement by their duly authorized representatives as of the date set forth above.

City of Santa Fe, NM	DENOVO VENTURES, LLC.
Signature	Signature
Alan Webber	David MacGrandle
Name (Type / Print)	Name (Type / Print)
Mayor	Chief Financial Officer
Title	Title
Oct 3, 2023	9/1/2023
Date	Date

Denovo

GSA U.S. General Services Administration

GENERAL SERVICES ADMINISTRATION
Federal Supply Service Authorized Federal Supply Schedule Price List

Multiple Award Schedule – Supplement No. 1 – Effective 9/24/2020

Code F: Information Technology
F03. – IT Services Subcategory

SIN 54151S **Information Technology Professional Services (previously SIN 132-51)**
SIN 54151ECOM **Electronic Commerce and Subscription Services (previously SIN 132-52)**

FSC D301	IT Facility Operation and Maintenance
FSC D302	IT Systems Development Services
FSC D304	Value Added Network Services (VANs)
FSC D304	E-Mail Services
FSC D304	Internet Access Services
FSC D304	Navigation Services
FSC D306	IT Systems Analysis Services
FSC D307	Automated Information Systems Design and Integration Services
FSC D308	Programming Services
FSC D310	IT Backup and Security Services
FSC D311	IT Data Conversion Services
FSC D313	Computer Aided Design/Computer Aided Manufacturing (CAD/CAM) Services
FSC D316	IT Network Management Services
FSC D317	Creation/Retrieval of IT Related Automated News Services, Data Services, or Other Information Services
FSC D399	Other Information Technology Services, Not Elsewhere Classified
FSC D399	Other Data Transmission Services, Not Elsewhere Classified - Except "Voice" and Pager Services

Denovo Ventures, LLC
6400 Lookout Road, Suite 101
Boulder, CO 80301
Phone: 877-433-6686
www.denovo-us.com

Contract Number: GS-35F-0026Y

Period Covered by Contract: **October 17, 2021 - October 16, 2026**

General Services Administration Federal Acquisition Service

Pricelist current through Modification #**A812** - Effective **February 5, 2020**.

Products and ordering information in this Authorized Information Technology Multiple Award Schedule Pricelist are also available on the GSA Advantage! System (http://www.gsaadvantage.gov).

CUSTOMER INFORMATION

1a. Awarded SINs:

Special Item Number	Description
54151S	Information Technology Professional Services – IT Professional Services and/or labor categories for database planning and design; systems analysis, integration, and design; programming, conversion and implementation support; network services, data/records management, and testing.
54151ECOM	Electronic Commerce and Subscription Services - Includes value added network services, e-mail services, Internet access services, electronic subscription services, data transmission services, and emerging electronic commerce technologies.

Note: Denovo Ventures, LLC wishes to participate under the Cooperative Purchasing and Recovery Purchasing programs. The following SINs are available to state and local governments:

1b. Lowest Priced Labor Categories: Senior Engineer

1c. See the Labor Category Descriptions section for descriptions of all corresponding job titles, experience, functional responsibility and education for the services offered.

2. Maximum order: The maximum order value for SINs 54151S, and SIN 54151ECOM is $500,000.

3. Minimum order: The minimum order to be issued is $100.00.

4. Geographic coverage: Domestic Delivery Only

5. Point(s) of production: Denovo Ventures, LLC offices

6. Discount from price list prices: Prices shown are NET Prices; Basic Discounts have been deducted.

7. Quantity Discounts: None

8. Prompt payment terms: 1% - Net 10 days from receipt of invoice or date of acceptance, whichever is later.

9a. Government purchase cards are accepted for payments equal to or less than the micro purchase threshold. In addition, bank account information for wire transfer payments will be shown on the invoice.

9b. The Contractor and the ordering agency may agree to use the credit card for dollar amounts over the micro-purchase threshold

10. Foreign items are not available on this contract.

11a. Time of delivery: To be negotiated between Denovo Ventures, LLC and the Ordering Agency.

11b. Expedited Delivery: Items available for expedited delivery are noted in this price list. They will be negotiated between Contractor and ordering Activity.

11c. Overnight and 2-day delivery: Neither Overnight nor 2-day delivery is available.

11d. URGENT REQUIREMENTS: When the Federal Supply Schedule contract delivery period does not meet the bona fide urgent delivery requirements of an ordering activity, ordering activities are encouraged, if time permits, to contact the Contractor for the purpose of obtaining accelerated delivery. The Contractor shall reply to the inquiry within 3 workdays after receipt. (Telephonic replies shall be confirmed by the Contractor in writing.) If the Contractor offers an accelerated delivery time acceptable to the ordering activity, any order(s) placed pursuant to the

agreed upon accelerated delivery time frame shall be delivered within this shorter delivery time and in accordance with all other terms and conditions of the contract.

12. F.O.B. Point: Destination

13a. Ordering address: Denovo Ventures, LLC
6400 Lookout Road, Suite 101
Boulder, CO 80301
cterry@denovo-us.com

13b. Ordering procedures: Ordering activities shall use the ordering procedures of Federal Acquisition Regulation (FAR) 8.405 when placing an order or establishing a BPA for supplies or services. These procedures apply to all schedules.

- FAR 8.405-1 Ordering procedures for supplies, and services not requiring a statement of work.
- FAR 8.405-2 Ordering procedures for services requiring a statement of work.

14. Payment address: Denovo Ventures, LLC
6400 Lookout Road, Suite 101
Boulder, CO 80301

15. Warranty provision: N/A

16. Export packing charges: N/A

17. Denovo accepts the Government Purchase Card for payments equal to or less than the micro purchase threshold. In addition, bank account information for wire transfer payments will be shown on the invoice.

18. Terms and conditions of rental, maintenance, and repair: N/A

19. Terms and conditions of installation: N/A

20. Terms and conditions of repair parts: N/A

20a. Terms and conditions for any other services: N/A

21. List of service and distribution points: N/A

22. List of participating dealers: N/A

23. Preventive maintenance: N/A

24a. Special attributes such as environmental attributes (e.g., recycled content, energy efficiency, and/or reduced pollutants): N/A

24b. If applicable, indicate that Section 508 compliance information is available on Electronic and Information Technology (EIT) supplies and services: N/A

25. Data Universal Number System (DUNS) number: 162891340

26. Notification regarding registration in System for Award Management (SAM) database. Denovo Ventures, LLC is registered in the www.SAM.gov database (formerly CCR).

Labor Category Descriptions

Senior Principal

Functional Responsibility:

- Perform analysis of client requirements and translate them into application specifications.
- Manage application implementations.
- Provide consulting services to the clients regarding integrated applications.
- Develop high-quality deliverables on time and within budget.
- Poses skills in designing and developing approaches to satisfy clients' business needs.

Education/ Experience Requirements: Bachelor of Arts or Bachelor of Science Degree in Computer Science, Information systems, Business, or related field or equivalent experience. Poses a minimum of eight years' experience implementing and supporting Enterprise Resource Planning (ERP) and/ or other Computer Systems.

Principal Engineer

Functional Responsibility:

- Apply enterprise-wide set of disciplines for planning, analysis, design, and development of
- systems for multiple installations or a major sector.
- Analysis of clients' processes, as well as adaptation of products to clients' needs.
- Transform client needs into project design specifications.
- Develop and administer client-designed Database solutions.
- Prepare detailed design documents.
- Understand development per generally accepted methodologies.
- Provide supervision and direction to staff on technical assignments in development and on
- project site.

Education/ Experience Requirements: Bachelor of Arts or Bachelor of Science Degree in Computer Science, Information Systems, Business, or related field or equivalent experience. Poses a minimum of five years in information systems development, functional and data requirements analysis, systems analysis, and program design. Experience managing implementation of information/ software engineering projects and either in systems design, programming, or DBA with knowledge/ experience in CASE tools/ methods, or functional experience performing business systems analysis working with Software applications products. Knowledge of Software technology. Poses leadership and/ or supervisory skills.

Senior Engineer

Functional Responsibility:

- Develop organization-wide information models for use in designing and building integrated,
- shared software, and database management systems.
- Apply Business Process Reengineering (BPR) to design, develop, and test the Software packaged
- goods application.
- Integrate applications.
- Ensure that project tasks are completed thoroughly and on time with the highest quality
- standards.
- Serve as the project team leader.
- Convert specifications into design, and convert design into deliverables on schedule.
- Perform quality assurance on all deliverables.

Education/ Experience Requirements: Bachelor of Arts or Bachelor of Science Degree in Computer Science, Information Systems, Business, or related field or equivalent experience. Poses a minimum of three years' experience in software applications, development, or functional experience performing business systems analysis working with Oracle applications products. Should poses specific industry experience. Solid ability to perform analysis and design. Experience managing project teams.

Awarded Pricelist

SIN 54151S Information Technology Professional Services

		Base Term				
Awarded GSA Labor Category	**Unit of Issue**	**GSA Hourly Rate w/ IFF - Year 1 (2021 - 2022)**	**GSA Hourly Rate w/ IFF - Year 2 (2022 - 2023)**	**GSA Hourly Rate w/ IFF - Year 3 (2023 - 2024)**	**GSA Hourly Rate w/ IFF - Year 4 (2024 - 2025)**	**GSA Hourly Rate w/ IFF - Year 5 (2025 -2026)**
Senior Principal	Hour	$240.20	$247.65	$255.32	$263.24	$271.40
Principal Engineer	Hour	$227.22	$234.26	$241.53	$249.01	$256.73
Senior Engineer	Hour	$207.74	$214.18	$220.82	$227.66	$234.72

SIN	Manufacturer	Part Number	Product Description	Unit of Issue	GSA Price w/ IFF	Warranty	COO
All of the following services include: Initial set up fees; Hardware and infrastructure costs; Technical managed services (backups, patches, technical tools and application upgrades); 24/7/365 help desk services; Functional support services; Development services; Oracle software; Ongoing training.							
54151ECOM	**Denovo Ventures, LLC**	**101-001-WOI**	**JD Edwards EnterpriseOne Customer Relationship Management Suite, which includes:**	**Per User/ Per Month**	**$222.97**	**EULA**	**US**
54151ECOM	Denovo Ventures, LLC	101-002-WOI	JD Edwards EnterpriseOne Advanced Pricing	Per User/ Per Month	$23.80	EULA	US
54151ECOM	Denovo Ventures, LLC	101-003-WOI	JD Edwards EnterpriseOne Branch Scripting	Per User/ Per Month	$3.70	EULA	US
54151ECOM	Denovo Ventures, LLC	101-004-WOI	JD Edwards EnterpriseOne Case Management	Per User/ Per Month	$24.61	EULA	US
54151ECOM	Denovo Ventures, LLC	101-005-WOI	JD Edwards EnterpriseOne CRM Foundation	Per User/ Per Month	$7.11	EULA	US
54151ECOM	Denovo Ventures, LLC	101-006-WOI	JD Edwards EnterpriseOne Customer Self Service	Per User/ Per Month	$11.25	EULA	US
54151ECOM	Denovo Ventures, LLC	101-007-WOI	JD Edwards EnterpriseOne Fulfillment Management	Per User/ Per Month	$47.00	EULA	US
54151ECOM	Denovo Ventures, LLC	101-008-WOI	JD Edwards EnterpriseOne Mobile Sales Inquiry	Per User/ Per Month	$7.61	EULA	US
54151ECOM	Denovo Ventures, LLC	101-009-WOI	JD Edwards EnterpriseOne Sales Force Automation	Per User/ Per Month	$12.89	EULA	US
54151ECOM	Denovo Ventures, LLC	101-010-WOI	JD Edwards EnterpriseOne Sales Order Management	Per User/ Per Month	$47.39	EULA	US
54151ECOM	Denovo Ventures, LLC	101-011-WOI	JD Edwards EnterpriseOne One View Reporting for Sales Order Management	Per User/ Per Month	$11.99	EULA	US
54151ECOM	Denovo Ventures, LLC	101-012-WOI	JD Edwards EnterpriseOne Service Management	Per User/ Per Month	$24.87	EULA	US
54151ECOM	Denovo Ventures, LLC	101-013-WOI	JD Edwards EnterpriseOne One View Reporting for Service Management	Per User/ Per Month	$11.99	EULA	US
54151ECOM	Denovo Ventures, LLC	101-014-WOI	JD Edwards EnterpriseOne Service Management Foundation	Per User/ Per Month	$4.31	EULA	US
54151ECOM	Denovo Ventures, LLC	101-015-WOI	JD Edwards EnterpriseOne Solution Advisor	Per User/ Per Month	$9.23	EULA	US
54151ECOM	**Denovo Ventures, LLC**	**101-016-WOI**	**JD Edwards EnterpriseOne Manufacturing and Supply Chain Management Suite, which includes:**	**Per User/ Per Month**	**$669.07**	**EULA**	**US**
54151ECOM	Denovo Ventures, LLC	101-017-WOI	JD Edwards EnterpriseOne Advanced Stock Valuation	Per User/ Per Month	$29.90	EULA	US
54151ECOM	Denovo Ventures, LLC	101-018-WOI	JD Edwards EnterpriseOne Agreement Management	Per User/ Per Month	$47.13	EULA	US
54151ECOM	Denovo Ventures, LLC	101-019-WOI	JD Edwards EnterpriseOne Apparel Management	Per User/ Per Month	$41.08	EULA	US
54151ECOM	Denovo Ventures, LLC	101-020-WOI	JD Edwards EnterpriseOne Blend Management	Per User/ Per Month	$47.13	EULA	US
54151ECOM	Denovo Ventures, LLC	101-021-WOI	JD Edwards EnterpriseOne Bulk Stock Inventory	Per User/ Per Month	$29.90	EULA	US
54151ECOM	Denovo Ventures, LLC	101-022-WOI	JD Edwards EnterpriseOne Configurator	Per User/ Per Month	$36.03	EULA	US
54151ECOM	Denovo Ventures, LLC	101-023-WOI	JD Edwards EnterpriseOne Demand Flow Manufacturing	Per User/ Per Month	$36.43	EULA	US
54151ECOM	Denovo Ventures, LLC	101-024-WOI	JD Edwards EnterpriseOne Demand Scheduling Execution	Per User/ Per Month	$47.52	EULA	US
54151ECOM	Denovo Ventures, LLC	101-025-WOI	JD Edwards EnterpriseOne Grower Management	Per User/ Per Month	$47.13	EULA	US
54151ECOM	Denovo Ventures, LLC	101-026-WOI	JD Edwards EnterpriseOne Grower Pricing and Payments	Per User/ Per Month	$47.00	EULA	US
54151ECOM	Denovo Ventures, LLC	101-027-WOI	JD Edwards EnterpriseOne Inventory Management	Per User/ Per Month	$47.52	EULA	US
54151ECOM	Denovo Ventures, LLC	101-028-WOI	JD Edwards EnterpriseOne One View Reporting for Inventory Management	Per User/ Per Month	$11.99	EULA	US
54151ECOM	Denovo Ventures, LLC	101-029-WOI	JD Edwards EnterpriseOne Manufacturing Management	Per User/ Per Month	$47.65	EULA	US
54151ECOM	Denovo Ventures, LLC	101-030-WOI	JD Edwards EnterpriseOne One View Reporting for Manufacturing Management	Per User/ Per Month	$11.99	EULA	US
54151ECOM	Denovo Ventures, LLC	101-031-WOI	JD Edwards EnterpriseOne Product Variants	Per User/ Per Month	$29.11	EULA	US
54151ECOM	Denovo Ventures, LLC	101-032-WOI	JD Edwards EnterpriseOne Quality Management	Per User/ Per Month	$15.99	EULA	US
54151ECOM	Denovo Ventures, LLC	101-033-WOI	JD Edwards EnterpriseOne Requirements Planning	Per User/ Per Month	$16.12	EULA	US
54151ECOM	Denovo Ventures, LLC	101-034-WOI	JD Edwards EnterpriseOne RFID Processor	Per User/ Per Month	$23.80	EULA	US
54151ECOM	Denovo Ventures, LLC	101-035-WOI	JD Edwards EnterpriseOne Transportation Management	Per User/ Per Month	$47.52	EULA	US
54151ECOM	Denovo Ventures, LLC	101-036-WOI	JD Edwards EnterpriseOne One View Reporting for Transportation Management	Per User/ Per Month	$46.74	EULA	US
54151ECOM	Denovo Ventures, LLC	101-037-WOI	JD Edwards EnterpriseOne Warehouse Management	Per User/ Per Month	$35.71	EULA	US
54151ECOM	**Denovo Ventures, LLC**	**101-038-WOI**	**JD Edwards EnterpriseOne Supply Chain Planning (APS) Suite, which includes:**	**Per User/ Per Month**	**$51.53**	**EULA**	**US**
54151ECOM	Denovo Ventures, LLC	101-039-WOI	JD Edwards EnterpriseOne Advanced Planning Agent	Per User/ Per Month	$3.81	EULA	US
54151ECOM	Denovo Ventures, LLC	101-040-WOI	JD Edwards EnterpriseOne Order Promising	Per User/ Per Month	$22.22	EULA	US
54151ECOM	Denovo Ventures, LLC	101-041-WOI	JD Edwards EnterpriseOne PDP Collaborative Web Client	Per User/ Per Month	$4.99	EULA	US
54151ECOM	Denovo Ventures, LLC	101-042-WOI	JD Edwards EnterpriseOne Production Scheduling	Per User/ Per Month	$13.12	EULA	US
54151ECOM	Denovo Ventures, LLC	101-043-WOI	JD Edwards EnterpriseOne Production Scheduling - Process	Per User/ Per Month	$13.12	EULA	US
54151ECOM	**Denovo Ventures, LLC**	**101-044-WOI**	**JD Edwards EnterpriseOne Demantra Suite, which includes:**	**Per User/ Per Month**	**$71.73**	**EULA**	**US**
54151ECOM	Denovo Ventures, LLC	101-045-WOI	JD Edwards EnterpriseOne Demantra Demand Management	Per User/ Per Month	$19.07	EULA	US
54151ECOM	Denovo Ventures, LLC	101-046-WOI	JD Edwards EnterpriseOne Option: Demantra Advanced Forecasting and Demand Modeling	Per User/ Per Month	$9.56	EULA	US
54151ECOM	Denovo Ventures, LLC	101-047-WOI	JD Edwards EnterpriseOne Option: Demantra Real-time Sales and Operations Planning	Per User/ Per Month	$13.02	EULA	US
54151ECOM	Denovo Ventures, LLC	101-048-WOI	JD Edwards EnterpriseOne Demantra Predictive Trade Planning	Per User/ Per Month	$18.94	EULA	US
54151ECOM	Denovo Ventures, LLC	101-049-WOI	JD Edwards EnterpriseOne Option: Demantra Deduction and Settlement Management	Per User/ Per Month	$9.56	EULA	US
54151ECOM	Denovo Ventures, LLC	101-050-WOI	JD Edwards EnterpriseOne Option: Demantra Trade Promotion Optimization	Per User/ Per Month	$9.56	EULA	US

SIN	Manufacturer	Part Number	Product Description	Unit of Issue	GSA Price w/ IFF	Warranty	COO
All of the following services include: Initial set up fees; Hardware and infrastructure costs; Technical managed services (backups, patches, technical tools and application upgrades); 24/7/365 help desk services; Functional support services; Development services; Oracle software; Ongoing training.							
54151ECOM	**Denovo Ventures, LLC**	**101-051-WOI**	**JD Edwards EnterpriseOne Supply Management Suite, which includes:**	**Per User/ Per Month**	**$205.69**	**EULA**	**US**
54151ECOM	Denovo Ventures, LLC	101-052-WOI	JD Edwards EnterpriseOne Buyer Workspace	Per User/ Per Month	$17.28	EULA	US
54151ECOM	Denovo Ventures, LLC	101-053-WOI	JD Edwards EnterpriseOne Mobile Purchase Order Approval	Per User/ Per Month	$7.61	EULA	US
54151ECOM	Denovo Ventures, LLC	101-054-WOI	JD Edwards EnterpriseOne Mobile Requisition Self Service Approval	Per User/ Per Month	$0.86	EULA	US
54151ECOM	Denovo Ventures, LLC	101-055-WOI	JD Edwards EnterpriseOne Operational Sourcing	Per User/ Per Month	$47.39	EULA	US
54151ECOM	Denovo Ventures, LLC	101-056-WOI	JD Edwards EnterpriseOne Procurement and Subcontract Management	Per User/ Per Month	$47.78	EULA	US
54151ECOM	Denovo Ventures, LLC	101-057-WOI	JD Edwards EnterpriseOne One View Reporting for Procurement and Subcontract Management	Per User/ Per Month	$11.99	EULA	US
54151ECOM	Denovo Ventures, LLC	101-058-WOI	JD Edwards EnterpriseOne Requisition Self Service	Per User/ Per Month	$1.72	EULA	US
54151ECOM	Denovo Ventures, LLC	101-059-WOI	JD Edwards EnterpriseOne Supplier Self Service	Per User/ Per Month	$93.92	EULA	US
54151ECOM	**Denovo Ventures, LLC**	**101-060-WOI**	**JD Edwards EnterpriseOne Asset Lifecycle Management Suite, which includes:**	**Per User/ Per Month**	**$199.27**	**EULA**	**US**
54151ECOM	Denovo Ventures, LLC	101-061-WOI	JD Edwards EnterpriseOne Advanced Real Estate Forecasting	Per User/ Per Month	$86.65	EULA	US
54151ECOM	Denovo Ventures, LLC	101-062-WOI	JD Edwards EnterpriseOne Capital Asset Management	Per User/ Per Month	$47.78	EULA	US
54151ECOM	Denovo Ventures, LLC	101-063-WOI	JD Edwards EnterpriseOne One View Reporting for Capital Asset Management	Per User/ Per Month	$11.99	EULA	US
54151ECOM	Denovo Ventures, LLC	101-064-WOI	JD Edwards EnterpriseOne Condition-Based Maintenance	Per User/ Per Month	$8.98	EULA	US
54151ECOM	Denovo Ventures, LLC	101-065-WOI	JD Edwards EnterpriseOne Equipment Cost Analysis	Per User/ Per Month	$8.85	EULA	US
54151ECOM	Denovo Ventures, LLC	101-066-WOI	JD Edwards EnterpriseOne Real Estate Management	Per User/ Per Month	$38.36	EULA	US
54151ECOM	Denovo Ventures, LLC	101-067-WOI	JD Edwards EnterpriseOne One View Reporting for Real Estate Management	Per User/ Per Month	$11.99	EULA	US
54151ECOM	Denovo Ventures, LLC	101-068-WOI	JD Edwards EnterpriseOne Resource Assignments	Per User/ Per Month	$6.79	EULA	US
54151ECOM	**Denovo Ventures, LLC**	**101-069-WOI**	**JD Edwards EnterpriseOne Project Management Suite, which includes:**	**Per User/ Per Month**	**$278.67**	**EULA**	**US**
54151ECOM	Denovo Ventures, LLC	101-070-WOI	JD Edwards EnterpriseOne Contract and Service Billing	Per User/ Per Month	$36.56	EULA	US
54151ECOM	Denovo Ventures, LLC	101-071-WOI	JD Edwards EnterpriseOne Homebuilder Management	Per User/ Per Month	$47.78	EULA	US
54151ECOM	Denovo Ventures, LLC	101-072-WOI	JD Edwards EnterpriseOne In-Memory Project Portfolio Management	Per User/ Per Month	$118.39	EULA	US
54151ECOM	Denovo Ventures, LLC	101-073-WOI	JD Edwards EnterpriseOne Project Costing	Per User/ Per Month	$47.39	EULA	US
54151ECOM	Denovo Ventures, LLC	101-074-WOI	JD Edwards EnterpriseOne One View Reporting for Project Costing	Per User/ Per Month	$11.99	EULA	US
54151ECOM	Denovo Ventures, LLC	101-075-WOI	JD Edwards EnterpriseOne Project and Government Contract Accounting	Per User/ Per Month	$47.52	EULA	US
54151ECOM	**Denovo Ventures, LLC**	**101-076-WOI**	**JD Edwards EnterpriseOne Financial Management Suite, which includes:**	**Per User/ Per Month**	**$75.20**	**EULA**	**US**
54151ECOM	Denovo Ventures, LLC	101-077-WOI	JD Edwards EnterpriseOne Expense Management	Per User/ Per Month	$0.98	EULA	US
54151ECOM	Denovo Ventures, LLC	101-078-WOI	JD Edwards EnterpriseOne Financials	Per User/ Per Month	$47.78	EULA	US
54151ECOM	Denovo Ventures, LLC	101-079-WOI	JD Edwards EnterpriseOne Option: Environmental Accounting and Reporting	Per User/ Per Month	$20.91	EULA	US
54151ECOM	Denovo Ventures, LLC	101-080-WOI	JD Edwards EnterpriseOne One View Reporting for Financials	Per User/ Per Month	$11.99	EULA	US
54151ECOM	Denovo Ventures, LLC	101-081-WOI	JD Edwards EnterpriseOne Mobile Expense Management	Per User/ Per Month	$0.67	EULA	US
54151ECOM	Denovo Ventures, LLC	101-082-WOI	JD Edwards EnterpriseOne System Foundation	Per User/ Per Month	$1.23	EULA	US
54151ECOM	**Denovo Ventures, LLC**	**101-083-WOI**	**JD Edwards EnterpriseOne Human Capital Management Suite, which includes**	**Per User/ Per Month**	**$45.09**	**EULA**	**US**
54151ECOM	Denovo Ventures, LLC	101-084-WOI	JD Edwards EnterpriseOne eRecruit	Per User/ Per Month	$1.35	EULA	US
54151ECOM	Denovo Ventures, LLC	101-085-WOI	JD Edwards EnterpriseOne Health & Safety Incident Management	Per User/ Per Month	$1.42	EULA	US
54151ECOM	Denovo Ventures, LLC	101-086-WOI	JD Edwards EnterpriseOne One View Reporting for Health & Safety Incident Management	Per User/ Per Month	$11.99	EULA	US
54151ECOM	Denovo Ventures, LLC	101-087-WOI	JD Edwards EnterpriseOne Human Resources	Per User/ Per Month	$3.43	EULA	US
54151ECOM	Denovo Ventures, LLC	101-088-WOI	JD Edwards EnterpriseOne One View Reporting for Human Resources	Per User/ Per Month	$11.99	EULA	US
54151ECOM	Denovo Ventures, LLC	101-089-WOI	JD Edwards EnterpriseOne Payroll	Per User/ Per Month	$3.84	EULA	US
54151ECOM	Denovo Ventures, LLC	101-090-WOI	JD Edwards EnterpriseOne One View Reporting for Payroll	Per User/ Per Month	$11.99	EULA	US
54151ECOM	Denovo Ventures, LLC	101-091-WOI	JD Edwards EnterpriseOne Self-Service Human Resources	Per User/ Per Month	$1.80	EULA	US
54151ECOM	Denovo Ventures, LLC	101-092-WOI	JD Edwards EnterpriseOne Time and Labor	Per User/ Per Month	$2.29	EULA	US
54151ECOM	**Denovo Ventures, LLC**	**101-093-WOI**	**JD Edwards EnterpriseOne Tools & Technology Suite, which includes:**	**Per User/ Per Month**	**$18.06**	**EULA**	**US**
54151ECOM	Denovo Ventures, LLC	101-094-WOI	*JD Edwards EnterpriseOne Core Tools and Infrastructure (EXCLUDED FROM SUITE)*	Per User/ Per Month	$3.32	*EULA*	*US*
54151ECOM	Denovo Ventures, LLC	101-095-WOI	Oracle Technology Foundation for JD Edwards EnterpriseOne	Per User/ Per Month	$6.34	EULA	US
54151ECOM	Denovo Ventures, LLC	101-096-WOI	Oracle TopLink and Application Development Framework	Per User/ Per Month	$1.73	EULA	US
54151ECOM	Denovo Ventures, LLC	101-097-WOI	JD Edwards EnterpriseOne One View Reporting Foundation	Per User/ Per Month	$11.99	EULA	US
54151ECOM	**Denovo Ventures, LLC**	**101-098-WOI**	**Application Integration Architecture Suite, which includes:**	**Per User/ Per Month**	**$2,043.76**	**EULA**	**US**
54151ECOM	Denovo Ventures, LLC	101-099-WOI	Application Integration Architecture Foundation Pack	Per User/ Per Month	$465.26	EULA	US
54151ECOM	Denovo Ventures, LLC	101-100-WOI	Oracle Demantra Sales and Operations Planning Integration to Hyperion Planning	Per User/ Per Month	$354.32	EULA	US
54151ECOM	Denovo Ventures, LLC	101-101-WOI	Oracle Project Portfolio Management Integration Pack for Primavera P6 and JD Edwards EnterpriseOne	Per User/ Per Month	$707.33	EULA	US
54151ECOM	Denovo Ventures, LLC	101-102-WOI	Oracle Utilities Customer Care and Billing Integration to JD Edwards Financials for General Ledger and Accounts	Per User/ Per Month	$36.61	EULA	US
54151ECOM	Denovo Ventures, LLC	101-103-WOI	Oracle Design to Release Integration Pack for Agile Product Lifecycle Management and JD Edwards EnterpriseOne	Per User/ Per Month	$707.33	EULA	US
54151ECOM	**Denovo Ventures, LLC**		**UPK**				

SIN	Manufacturer	Part Number	Product Description	Unit of Issue	GSA Price w/ IFF	Warranty	COO
All of the following services include: Initial set up fees; Hardware and infrastructure costs; Technical managed services (backups, patches, technical tools and application upgrades); 24/7/365 help desk services; Functional support services; Development services; Oracle software; Ongoing training.							
54151ECOM	Denovo Ventures, LLC	101-104-WOI	Oracle User Productivity Kit Standard - Developer	Per User/ Per Month	$173.53	EULA	US
54151ECOM	Denovo Ventures, LLC	101-105-WOI	Oracle User Productivity Kit Standard - User	Per User/ Per Month	$1.43	EULA	US
54151ECOM	Denovo Ventures, LLC	101-106-WOI	Oracle User Productivity Kit Standard - Employee	Per User/ Per Month	$0.93	EULA	US
54151ECOM	Denovo Ventures, LLC	101-107-WOI	Oracle User Productivity Kit Professional - Developer	Per User/ Per Month	$173.53	EULA	US
54151ECOM	Denovo Ventures, LLC	101-108-WOI	Oracle User Productivity Kit Professional - User	Per User/ Per Month	$1.53	EULA	US
54151ECOM	Denovo Ventures, LLC	101-109-WOI	Oracle User Productivity Kit Professional - Employee	Per User/ Per Month	$1.03	EULA	US
54151ECOM	**Denovo Ventures, LLC**		**User Productivity Kit Content Materials for Manufacturing and Supply Chain Management Suite (up to 4,000**				
54151ECOM	Denovo Ventures, LLC	101-110-WOI	JD Edwards EnterpriseOne UPK for Blend Management	Per User/ Per Month	$176.90	EULA	US
54151ECOM	Denovo Ventures, LLC	101-111-WOI	JD Edwards EnterpriseOne UPK for Configurator	Per User/ Per Month	$176.90	EULA	US
54151ECOM	Denovo Ventures, LLC	101-112-WOI	JD Edwards EnterpriseOne UPK for Grower Management	Per User/ Per Month	$176.90	EULA	US
54151ECOM	Denovo Ventures, LLC	101-113-WOI	JD Edwards EnterpriseOne UPK for Grower Pricing and Payments	Per User/ Per Month	$176.90	EULA	US
54151ECOM	Denovo Ventures, LLC	101-114-WOI	JD Edwards EnterpriseOne UPK for Manufacturing Management Engineer to Order	Per User/ Per Month	$176.90	EULA	US
54151ECOM	Denovo Ventures, LLC	101-115-WOI	JD Edwards EnterpriseOne UPK for Manufacturing Management, Process Manufacturing	Per User/ Per Month	$176.90	EULA	US
54151ECOM	**Denovo Ventures, LLC**		**User Productivity Kit Content Materials for Financial Management**				
54151ECOM	Denovo Ventures, LLC	101-116-WOI	JD Edwards EnterpriseOne UPK Accounts Payable	Per User/ Per Month	$176.90	EULA	US
54151ECOM	Denovo Ventures, LLC	101-117-WOI	JD Edwards EnterpriseOne UPK Accounts Receivable	Per User/ Per Month	$176.90	EULA	US
54151ECOM	Denovo Ventures, LLC	101-118-WOI	JD Edwards EnterpriseOne UPK for Fixed Assets Accounting	Per User/ Per Month	$176.90	EULA	US
54151ECOM	Denovo Ventures, LLC	101-119-WOI	JD Edwards EnterpriseOne UPK General Ledger	Per User/ Per Month	$176.90	EULA	US
54151ECOM	**Denovo Ventures, LLC**		**User Productivity Kit Content Materials for Supply Chain Management**				
54151ECOM	Denovo Ventures, LLC	101-120-WOI	JD Edwards EnterpriseOne UPK for Advanced Pricing	Per User/ Per Month	$176.90	EULA	US
54151ECOM	Denovo Ventures, LLC	101-121-WOI	JD Edwards EnterpriseOne UPK Inventory Management	Per User/ Per Month	$176.90	EULA	US
54151ECOM	Denovo Ventures, LLC	101-122-WOI	JD Edwards EnterpriseOne UPK Manufacturing - PDM	Per User/ Per Month	$176.90	EULA	US
54151ECOM	Denovo Ventures, LLC	101-123-WOI	JD Edwards EnterpriseOne UPK for Sales Order Management	Per User/ Per Month	$176.90	EULA	US
54151ECOM	**Denovo Ventures, LLC**		**User Productivity Kit Content Materials for Supplier Relationship Management**				
54151ECOM	Denovo Ventures, LLC	101-124-WOI	JD Edwards EnterpriseOne UPK Procurement and Subcontract Management	Per User/ Per Month	$176.90	EULA	US
54151ECOM	Denovo Ventures, LLC	101-125-WOI	JD Edwards EnterpriseOne UPK for Manufacturing Management Discrete Shop Floor Management	Per User/ Per Month	$176.90	EULA	US
54151ECOM	**Denovo Ventures, LLC**		**User Productivity Kit Content Materials for Asset Lifecycle Management**				
54151ECOM	Denovo Ventures, LLC	101-126-WOI	JD Edwards EnterpriseOne UPK for Advanced Real Estate Forecasting	Per User/ Per Month	$176.90	EULA	US
54151ECOM	Denovo Ventures, LLC	101-127-WOI	JD Edwards EnterpriseOne UPK for Real Estate Management	Per User/ Per Month	$176.90	EULA	US
54151ECOM	**Denovo Ventures, LLC**		**User Productivity Kit Content Materials for Project Management**				
54151ECOM	Denovo Ventures, LLC	101-128-WOI	JD Edwards EnterpriseOne UPK for Homebuilder Management	Per User/ Per Month	$176.90	EULA	US
54151ECOM	**Denovo Ventures, LLC**		**User Productivity Kit Content Materials for Human Capital Management**				
54151ECOM	Denovo Ventures, LLC	101-129-WOI	JD Edwards EnterpriseOne UPK for Human Capital Management Fundamentals	Per User/ Per Month	$176.90	EULA	US
54151ECOM	Denovo Ventures, LLC	101-130-WOI	JD Edwards EnterpriseOne User Productivity Kit for Human Resources, Benefits	Per User/ Per Month	$176.90	EULA	US
54151ECOM	Denovo Ventures, LLC	101-131-WOI	JD Edwards EnterpriseOne UPK for Time and Labor	Per User/ Per Month	$176.90	EULA	US
54151ECOM	**Denovo Ventures, LLC**		**Other User Productivity Kit Content Materials**				
54151ECOM	Denovo Ventures, LLC	101-132-WOI	JD Edwards EnterpriseOne UPK Fundamentals for EnterpriseOne	Per User/ Per Month	$176.90	EULA	US

SIN	Manufacturer	Part Numbe	Product Description	Unit of Issue	GSA Price w/ IFF	Warranty	COO
All of the following services with implementation include: Initial setup fees; Hardware and infrastructure costs; Technical managed services (backups, patches, technical tools and application upgrades); 24/7/365 help desk services; Functional support services; Development services; Oracle software; Ongoing training; Project management; Design, configuration, and testing services; Initial development (data conversion, reports, and integration with third party solutions); Initial training services; Post go-live support; System and training documentation.							
54151ECOM	**Denovo Ventures, LLC**	**101-001-WI**	**JD Edwards EnterpriseOne Customer Relationship Management Suite, which includes:**	**Per User/ Per Month**	**$326.60**	**EULA**	**US**
54151ECOM	Denovo Ventures, LLC	101-002-WI	JD Edwards EnterpriseOne Advanced Pricing	Per User/ Per Month	$30.97	EULA	US
54151ECOM	Denovo Ventures, LLC	101-003-WI	JD Edwards EnterpriseOne Branch Scripting	Per User/ Per Month	$7.29	EULA	US
54151ECOM	Denovo Ventures, LLC	101-004-WI	JD Edwards EnterpriseOne Case Management	Per User/ Per Month	$31.78	EULA	US
54151ECOM	Denovo Ventures, LLC	101-005-WI	JD Edwards EnterpriseOne CRM Foundation	Per User/ Per Month	$14.28	EULA	US
54151ECOM	Denovo Ventures, LLC	101-006-WI	JD Edwards EnterpriseOne Customer Self Service	Per User/ Per Month	$27.39	EULA	US
54151ECOM	Denovo Ventures, LLC	101-007-WI	JD Edwards EnterpriseOne Fulfillment Management	Per User/ Per Month	$54.17	EULA	US
54151ECOM	Denovo Ventures, LLC	101-008-WI	JD Edwards EnterpriseOne Mobile Sales Inquiry	Per User/ Per Month	$14.79	EULA	US
54151ECOM	Denovo Ventures, LLC	101-009-WI	JD Edwards EnterpriseOne Sales Force Automation	Per User/ Per Month	$23.65	EULA	US
54151ECOM	Denovo Ventures, LLC	101-010-WI	JD Edwards EnterpriseOne Sales Order Management	Per User/ Per Month	$67.12	EULA	US
54151ECOM	Denovo Ventures, LLC	101-011-WI	JD Edwards EnterpriseOne One View Reporting for Sales Order Management	Per User/ Per Month	$13.07	EULA	US
54151ECOM	Denovo Ventures, LLC	101-012-WI	JD Edwards EnterpriseOne Service Management	Per User/ Per Month	$41.01	EULA	US
54151ECOM	Denovo Ventures, LLC	101-013-WI	JD Edwards EnterpriseOne One View Reporting for Service Management	Per User/ Per Month	$13.07	EULA	US
54151ECOM	Denovo Ventures, LLC	101-014-WI	JD Edwards EnterpriseOne Service Management Foundation	Per User/ Per Month	$7.89	EULA	US
54151ECOM	Denovo Ventures, LLC	101-015-WI	JD Edwards EnterpriseOne Solution Advisor	Per User/ Per Month	$16.40	EULA	US
54151ECOM	**Denovo Ventures, LLC**	**101-016-WI**	**JD Edwards EnterpriseOne Manufacturing and Supply Chain Management Suite, which includes:**	**Per User/ Per Month**	**$915.70**	**EULA**	**US**
54151ECOM	Denovo Ventures, LLC	101-017-WI	JD Edwards EnterpriseOne Advanced Stock Valuation	Per User/ Per Month	$37.08	EULA	US
54151ECOM	Denovo Ventures, LLC	101-018-WI	JD Edwards EnterpriseOne Agreement Management	Per User/ Per Month	$57.89	EULA	US
54151ECOM	Denovo Ventures, LLC	101-019-WI	JD Edwards EnterpriseOne Apparel Management	Per User/ Per Month	$51.84	EULA	US
54151ECOM	Denovo Ventures, LLC	101-020-WI	JD Edwards EnterpriseOne Blend Management	Per User/ Per Month	$57.89	EULA	US
54151ECOM	Denovo Ventures, LLC	101-021-WI	JD Edwards EnterpriseOne Bulk Stock Inventory	Per User/ Per Month	$37.08	EULA	US
54151ECOM	Denovo Ventures, LLC	101-022-WI	JD Edwards EnterpriseOne Configurator	Per User/ Per Month	$46.80	EULA	US
54151ECOM	Denovo Ventures, LLC	101-023-WI	JD Edwards EnterpriseOne Demand Flow Manufacturing	Per User/ Per Month	$59.74	EULA	US
54151ECOM	Denovo Ventures, LLC	101-024-WI	JD Edwards EnterpriseOne Demand Scheduling Execution	Per User/ Per Month	$70.84	EULA	US
54151ECOM	Denovo Ventures, LLC	101-025-WI	JD Edwards EnterpriseOne Grower Management	Per User/ Per Month	$57.89	EULA	US
54151ECOM	Denovo Ventures, LLC	101-026-WI	JD Edwards EnterpriseOne Grower Pricing and Payments	Per User/ Per Month	$54.17	EULA	US
54151ECOM	Denovo Ventures, LLC	101-027-WI	JD Edwards EnterpriseOne Inventory Management	Per User/ Per Month	$70.84	EULA	US
54151ECOM	Denovo Ventures, LLC	101-028-WI	JD Edwards EnterpriseOne One View Reporting for Inventory Management	Per User/ Per Month	$13.07	EULA	US
54151ECOM	Denovo Ventures, LLC	101-029-WI	JD Edwards EnterpriseOne Manufacturing Management	Per User/ Per Month	$74.55	EULA	US
54151ECOM	Denovo Ventures, LLC	101-030-WI	JD Edwards EnterpriseOne One View Reporting for Manufacturing Management	Per User/ Per Month	$13.07	EULA	US
54151ECOM	Denovo Ventures, LLC	101-031-WI	JD Edwards EnterpriseOne Product Variants	Per User/ Per Month	$45.25	EULA	US
54151ECOM	Denovo Ventures, LLC	101-032-WI	JD Edwards EnterpriseOne Quality Management	Per User/ Per Month	$32.13	EULA	US
54151ECOM	Denovo Ventures, LLC	101-033-WI	JD Edwards EnterpriseOne Requirements Planning	Per User/ Per Month	$35.85	EULA	US
54151ECOM	Denovo Ventures, LLC	101-034-WI	JD Edwards EnterpriseOne RFID Processor	Per User/ Per Month	$30.97	EULA	US
54151ECOM	Denovo Ventures, LLC	101-035-WI	JD Edwards EnterpriseOne Transportation Management	Per User/ Per Month	$70.84	EULA	US
54151ECOM	Denovo Ventures, LLC	101-036-WI	JD Edwards EnterpriseOne One View Reporting for Transportation Management	Per User/ Per Month	$47.81	EULA	US
54151ECOM	Denovo Ventures, LLC	101-037-WI	JD Edwards EnterpriseOne Warehouse Management	Per User/ Per Month	$51.85	EULA	US
54151ECOM	**Denovo Ventures, LLC**	**101-038-WI**	**JD Edwards EnterpriseOne Supply Chain Planning (APS) Suite, which includes:**	**Per User/ Per Month**	**$106.41**	**EULA**	**US**
54151ECOM	Denovo Ventures, LLC	101-039-WI	JD Edwards EnterpriseOne Advanced Planning Agent	Per User/ Per Month	$14.57	EULA	US
54151ECOM	Denovo Ventures, LLC	101-040-WI	JD Edwards EnterpriseOne Order Promising	Per User/ Per Month	$32.98	EULA	US
54151ECOM	Denovo Ventures, LLC	101-041-WI	JD Edwards EnterpriseOne PDP Collaborative Web Client	Per User/ Per Month	$12.16	EULA	US
54151ECOM	Denovo Ventures, LLC	101-042-WI	JD Edwards EnterpriseOne Production Scheduling	Per User/ Per Month	$29.26	EULA	US
54151ECOM	Denovo Ventures, LLC	101-043-WI	JD Edwards EnterpriseOne Production Scheduling - Process	Per User/ Per Month	$29.26	EULA	US
54151ECOM	**Denovo Ventures, LLC**	**101-044-WI**	**JD Edwards EnterpriseOne Demantra Suite, which includes:**	**Per User/ Per Month**	**$139.53**	**EULA**	**US**
54151ECOM	Denovo Ventures, LLC	101-045-WI	JD Edwards EnterpriseOne Demantra Demand Management	Per User/ Per Month	$35.21	EULA	US
54151ECOM	Denovo Ventures, LLC	101-046-WI	JD Edwards EnterpriseOne Option: Demantra Advanced Forecasting and Demand Modeling	Per User/ Per Month	$20.32	EULA	US
54151ECOM	Denovo Ventures, LLC	101-047-WI	JD Edwards EnterpriseOne Option: Demantra Real-time Sales and Operations Planning	Per User/ Per Month	$29.16	EULA	US
54151ECOM	Denovo Ventures, LLC	101-048-WI	JD Edwards EnterpriseOne Demantra Predictive Trade Planning	Per User/ Per Month	$29.70	EULA	US
54151ECOM	Denovo Ventures, LLC	101-049-WI	JD Edwards EnterpriseOne Option: Demantra Deduction and Settlement Management	Per User/ Per Month	$20.32	EULA	US
54151ECOM	Denovo Ventures, LLC	101-050-WI	JD Edwards EnterpriseOne Option: Demantra Trade Promotion Optimization	Per User/ Per Month	$20.32	EULA	US
54151ECOM	**Denovo Ventures, LLC**	**101-051-WI**	**JD Edwards EnterpriseOne Supply Management Suite, which includes:**	**Per User/ Per Month**	**$309.96**	**EULA**	**US**

SIN	Manufacturer	Part Numbe	Product Description	Unit of Issue	GSA Price w/ IFF	Warranty	COO
All of the following services with implementation include: Initial setup fees; Hardware and infrastructure costs; Technical managed services (backups, patches, technical tools and application upgrades); 24/7/365 help desk services; Functional support services; Development services; Oracle software; Ongoing training; Project management; Design, configuration, and testing services; Initial development (data conversion, reports, and integration with third party solutions); Initial training services; Post go-live support; System and training documentation.							
54151ECOM	Denovo Ventures, LLC	101-052-WI	JD Edwards EnterpriseOne Buyer Workspace	Per User/ Per Month	$28.04	EULA	US
54151ECOM	Denovo Ventures, LLC	101-053-WI	JD Edwards EnterpriseOne Mobile Purchase Order Approval	Per User/ Per Month	$14.79	EULA	US
54151ECOM	Denovo Ventures, LLC	101-054-WI	JD Edwards EnterpriseOne Mobile Requisition Self Service Approval	Per User/ Per Month	$8.03	EULA	US
54151ECOM	Denovo Ventures, LLC	101-055-WI	JD Edwards EnterpriseOne Operational Sourcing	Per User/ Per Month	$67.12	EULA	US
54151ECOM	Denovo Ventures, LLC	101-056-WI	JD Edwards EnterpriseOne Procurement and Subcontract Management	Per User/ Per Month	$78.27	EULA	US
54151ECOM	Denovo Ventures, LLC	101-057-WI	JD Edwards EnterpriseOne One View Reporting for Procurement and Subcontract Management	Per User/ Per Month	$13.07	EULA	US
54151ECOM	Denovo Ventures, LLC	101-058-WI	JD Edwards EnterpriseOne Requisition Self Service	Per User/ Per Month	$17.86	EULA	US
54151ECOM	Denovo Ventures, LLC	101-059-WI	JD Edwards EnterpriseOne Supplier Self Service	Per User/ Per Month	$117.23	EULA	US
54151ECOM	**Denovo Ventures, LLC**	**101-060-WI**	**JD Edwards EnterpriseOne Asset Lifecycle Management Suite, which includes:**	**Per User/ Per Month**	**$302.89**	**EULA**	**US**
54151ECOM	Denovo Ventures, LLC	101-061-WI	JD Edwards EnterpriseOne Advanced Real Estate Forecasting	Per User/ Per Month	$102.79	EULA	US
54151ECOM	Denovo Ventures, LLC	101-062-WI	JD Edwards EnterpriseOne Capital Asset Management	Per User/ Per Month	$78.27	EULA	US
54151ECOM	Denovo Ventures, LLC	101-063-WI	JD Edwards EnterpriseOne One View Reporting for Capital Asset Management	Per User/ Per Month	$13.07	EULA	US
54151ECOM	Denovo Ventures, LLC	101-064-WI	JD Edwards EnterpriseOne Condition-Based Maintenance	Per User/ Per Month	$25.12	EULA	US
54151ECOM	Denovo Ventures, LLC	101-065-WI	JD Edwards EnterpriseOne Equipment Cost Analysis	Per User/ Per Month	$19.61	EULA	US
54151ECOM	Denovo Ventures, LLC	101-066-WI	JD Edwards EnterpriseOne Real Estate Management	Per User/ Per Month	$58.09	EULA	US
54151ECOM	Denovo Ventures, LLC	101-067-WI	JD Edwards EnterpriseOne One View Reporting for Real Estate Management	Per User/ Per Month	$13.07	EULA	US
54151ECOM	Denovo Ventures, LLC	101-068-WI	JD Edwards EnterpriseOne Resource Assignments	Per User/ Per Month	$26.52	EULA	US
54151ECOM	**Denovo Ventures, LLC**	**101-069-WI**	**JD Edwards EnterpriseOne Project Management Suite, which includes:**	**Per User/ Per Month**	**$397.47**	**EULA**	**US**
54151ECOM	Denovo Ventures, LLC	101-070-WI	JD Edwards EnterpriseOne Contract and Service Billing	Per User/ Per Month	$63.46	EULA	US
54151ECOM	Denovo Ventures, LLC	101-071-WI	JD Edwards EnterpriseOne Homebuilder Management	Per User/ Per Month	$78.27	EULA	US
54151ECOM	Denovo Ventures, LLC	101-072-WI	JD Edwards EnterpriseOne In-Memory Project Portfolio Management	Per User/ Per Month	$148.87	EULA	US
54151ECOM	Denovo Ventures, LLC	101-073-WI	JD Edwards EnterpriseOne Project Costing	Per User/ Per Month	$67.12	EULA	US
54151ECOM	Denovo Ventures, LLC	101-074-WI	JD Edwards EnterpriseOne One View Reporting for Project Costing	Per User/ Per Month	$13.07	EULA	US
54151ECOM	Denovo Ventures, LLC	101-075-WI	JD Edwards EnterpriseOne Project and Government Contract Accounting	Per User/ Per Month	$70.84	EULA	US
54151ECOM	**Denovo Ventures, LLC**	**101-076-WI**	**JD Edwards EnterpriseOne Financial Management Suite, which includes:**	**Per User/ Per Month**	**$137.51**	**EULA**	**US**
54151ECOM	Denovo Ventures, LLC	101-077-WI	JD Edwards EnterpriseOne Expense Management	Per User/ Per Month	$17.12	EULA	US
54151ECOM	Denovo Ventures, LLC	101-078-WI	JD Edwards EnterpriseOne Financials	Per User/ Per Month	$78.27	EULA	US
54151ECOM	Denovo Ventures, LLC	101-079-WI	JD Edwards EnterpriseOne Option: Environmental Accounting and Reporting	Per User/ Per Month	$31.67	EULA	US
54151ECOM	Denovo Ventures, LLC	101-080-WI	JD Edwards EnterpriseOne One View Reporting for Financials	Per User/ Per Month	$13.07	EULA	US
54151ECOM	Denovo Ventures, LLC	101-081-WI	JD Edwards EnterpriseOne Mobile Expense Management	Per User/ Per Month	$7.85	EULA	US
54151ECOM	Denovo Ventures, LLC	101-082-WI	JD Edwards EnterpriseOne System Foundation	Per User/ Per Month	$4.82	EULA	US
54151ECOM	**Denovo Ventures, LLC**	**101-083-WI**	**JD Edwards EnterpriseOne Human Capital Management Suite, which includes**	**Per User/ Per Month**	**$177.13**	**EULA**	**US**
54151ECOM	Denovo Ventures, LLC	101-084-WI	JD Edwards EnterpriseOne eRecruit	Per User/ Per Month	$21.08	EULA	US
54151ECOM	Denovo Ventures, LLC	101-085-WI	JD Edwards EnterpriseOne Health & Safety Incident Management	Per User/ Per Month	$17.56	EULA	US
54151ECOM	Denovo Ventures, LLC	101-086-WI	JD Edwards EnterpriseOne One View Reporting for Health & Safety Incident Management	Per User/ Per Month	$13.07	EULA	US
54151ECOM	Denovo Ventures, LLC	101-087-WI	JD Edwards EnterpriseOne Human Resources	Per User/ Per Month	$35.72	EULA	US
54151ECOM	Denovo Ventures, LLC	101-088-WI	JD Edwards EnterpriseOne One View Reporting for Human Resources	Per User/ Per Month	$13.07	EULA	US
54151ECOM	Denovo Ventures, LLC	101-089-WI	JD Edwards EnterpriseOne Payroll	Per User/ Per Month	$36.12	EULA	US
54151ECOM	Denovo Ventures, LLC	101-090-WI	JD Edwards EnterpriseOne One View Reporting for Payroll	Per User/ Per Month	$13.07	EULA	US
54151ECOM	Denovo Ventures, LLC	101-091-WI	JD Edwards EnterpriseOne Self-Service Human Resources	Per User/ Per Month	$21.53	EULA	US
54151ECOM	Denovo Ventures, LLC	101-092-WI	JD Edwards EnterpriseOne Time and Labor	Per User/ Per Month	$25.60	EULA	US
54151ECOM	**Denovo Ventures, LLC**	**101-093-WI**	**JD Edwards EnterpriseOne Tools & Technology Suite, which includes:**	**Per User/ Per Month**	**$40.01**	**EULA**	**US**
54151ECOM	Denovo Ventures, LLC	101-094-WI	*JD Edwards EnterpriseOne Core Tools and Infrastructure (EXCLUDED FROM SUITE)*	Per User/ Per Month	$23.04	*EULA*	*US*
54151ECOM	Denovo Ventures, LLC	101-095-WI	Oracle Technology Foundation for JD Edwards EnterpriseOne	Per User/ Per Month	$26.07	EULA	US
54151ECOM	Denovo Ventures, LLC	101-096-WI	Oracle TopLink and Application Development Framework	Per User/ Per Month	$5.32	EULA	US
54151ECOM	Denovo Ventures, LLC	101-097-WI	JD Edwards EnterpriseOne One View Reporting Foundation	Per User/ Per Month	$13.07	EULA	US
54151ECOM	**Denovo Ventures, LLC**	**101-098-WI**	**Application Integration Architecture Suite, which includes:**	**Per User/ Per Month**	**$2,164.82**	**EULA**	**US**
54151ECOM	Denovo Ventures, LLC	101-099-WI	Application Integration Architecture Foundation Pack	Per User/ Per Month	$492.17	EULA	US
54151ECOM	Denovo Ventures, LLC	101-100-WI	Oracle Demantra Sales and Operations Planning Integration to Hyperion Planning	Per User/ Per Month	$381.22	EULA	US
54151ECOM	Denovo Ventures, LLC	101-101-WI	Oracle Project Portfolio Management Integration Pack for Primavera P6 and JD Edwards EnterpriseOne	Per User/ Per Month	$734.23	EULA	US
54151ECOM	Denovo Ventures, LLC	101-102-WI	Oracle Utilities Customer Care and Billing Integration to JD Edwards Financials for General Ledger and Accounts Payable	Per User/ Per Month	$63.51	EULA	US

SIN	Manufacturer	Part Numbe	Product Description	Unit of Issue	GSA Price w/ IFF	Warranty	COO
All of the following services with implementation include: Initial setup fees; Hardware and infrastructure costs; Technical managed services (backups, patches, technical tools and application upgrades); 24/7/365 help desk services: Functional support services: Development services: Oracle software: Ongoing training: Project management: Design, configuration, and testing services: Initial development (data conversion, reports, and integration with third party solutions); Initial training services; Post go-live support; System and training documentation.							
54151ECOM	Denovo Ventures, LLC	101-103-WI	Oracle Design to Release Integration Pack for Agile Product Lifecycle Management and JD Edwards EnterpriseOne	Per User/ Per Month	$734.23	EULA	US
54151ECOM	Denovo Ventures, LLC		UPK				
54151ECOM	Denovo Ventures, LLC	101-104-WI	Oracle User Productivity Kit Standard - Developer	Per User/ Per Month	$177.12	EULA	US
54151ECOM	Denovo Ventures, LLC	101-105-WI	Oracle User Productivity Kit Standard - User	Per User/ Per Month	$5.02	EULA	US
54151ECOM	Denovo Ventures, LLC	101-106-WI	Oracle User Productivity Kit Standard - Employee	Per User/ Per Month	$4.51	EULA	US
54151ECOM	Denovo Ventures, LLC	101-107-WI	Oracle User Productivity Kit Professional - Developer	Per User/ Per Month	$177.12	EULA	US
54151ECOM	Denovo Ventures, LLC	101-108-WI	Oracle User Productivity Kit Professional - User	Per User/ Per Month	$5.12	EULA	US
54151ECOM	Denovo Ventures, LLC	101-109-WI	Oracle User Productivity Kit Professional - Employee	Per User/ Per Month	$4.61	EULA	US
54151ECOM	Denovo Ventures, LLC		User Productivity Kit Content Materials for Manufacturing and Supply Chain Management Suite (up to 4,000 employees)				
54151ECOM	Denovo Ventures, LLC	101-110-WI	JD Edwards EnterpriseOne UPK for Blend Management	Per User/ Per Month	$177.97	EULA	US
54151ECOM	Denovo Ventures, LLC	101-111-WI	JD Edwards EnterpriseOne UPK for Configurator	Per User/ Per Month	$177.97	EULA	US
54151ECOM	Denovo Ventures, LLC	101-112-WI	JD Edwards EnterpriseOne UPK for Grower Management	Per User/ Per Month	$177.97	EULA	US
54151ECOM	Denovo Ventures, LLC	101-113-WI	JD Edwards EnterpriseOne UPK for Grower Pricing and Payments	Per User/ Per Month	$177.97	EULA	US
54151ECOM	Denovo Ventures, LLC	101-114-WI	JD Edwards EnterpriseOne UPK for Manufacturing Management Engineer to Order	Per User/ Per Month	$177.97	EULA	US
54151ECOM	Denovo Ventures, LLC	101-115-WI	JD Edwards EnterpriseOne UPK for Manufacturing Management, Process Manufacturing	Per User/ Per Month	$177.97	EULA	US
54151ECOM	Denovo Ventures, LLC		User Productivity Kit Content Materials for Financial Management				
54151ECOM	Denovo Ventures, LLC	101-116-WI	JD Edwards EnterpriseOne UPK Accounts Payable	Per User/ Per Month	$177.97	EULA	US
54151ECOM	Denovo Ventures, LLC	101-117-WI	JD Edwards EnterpriseOne UPK Accounts Receivable	Per User/ Per Month	$177.97	EULA	US
54151ECOM	Denovo Ventures, LLC	101-118-WI	JD Edwards EnterpriseOne UPK for Fixed Assets Accounting	Per User/ Per Month	$177.97	EULA	US
54151ECOM	Denovo Ventures, LLC	101-119-WI	JD Edwards EnterpriseOne UPK General Ledger	Per User/ Per Month	$177.97	EULA	US
54151ECOM	Denovo Ventures, LLC		User Productivity Kit Content Materials for Supply Chain Management				
54151ECOM	Denovo Ventures, LLC	101-120-WI	JD Edwards EnterpriseOne UPK for Advanced Pricing	Per User/ Per Month	$177.97	EULA	US
54151ECOM	Denovo Ventures, LLC	101-121-WI	JD Edwards EnterpriseOne UPK Inventory Management	Per User/ Per Month	$177.97	EULA	US
54151ECOM	Denovo Ventures, LLC	101-122-WI	JD Edwards EnterpriseOne UPK Manufacturing - PDM	Per User/ Per Month	$177.97	EULA	US
54151ECOM	Denovo Ventures, LLC	101-123-WI	JD Edwards EnterpriseOne UPK for Sales Order Management	Per User/ Per Month	$177.97	EULA	US
54151ECOM	Denovo Ventures, LLC		User Productivity Kit Content Materials for Supplier Relationship Management				
54151ECOM	Denovo Ventures, LLC	101-124-WI	JD Edwards EnterpriseOne UPK Procurement and Subcontract Management	Per User/ Per Month	$177.97	EULA	US
54151ECOM	Denovo Ventures, LLC	101-125-WI	JD Edwards EnterpriseOne UPK for Manufacturing Management Discrete Shop Floor Management	Per User/ Per Month	$177.97	EULA	US
54151ECOM	Denovo Ventures, LLC		User Productivity Kit Content Materials for Asset Lifecycle Management				
54151ECOM	Denovo Ventures, LLC	101-126-WI	JD Edwards EnterpriseOne UPK for Advanced Real Estate Forecasting	Per User/ Per Month	$177.97	EULA	US
54151ECOM	Denovo Ventures, LLC	101-127-WI	JD Edwards EnterpriseOne UPK for Real Estate Management	Per User/ Per Month	$177.97	EULA	US
54151ECOM	Denovo Ventures, LLC		User Productivity Kit Content Materials for Project Management				
54151ECOM	Denovo Ventures, LLC	101-128-WI	JD Edwards EnterpriseOne UPK for Homebuilder Management	Per User/ Per Month	$177.97	EULA	US
54151ECOM	Denovo Ventures, LLC		User Productivity Kit Content Materials for Human Capital Management				
54151ECOM	Denovo Ventures, LLC	101-129-WI	JD Edwards EnterpriseOne UPK for Human Capital Management Fundamentals	Per User/ Per Month	$177.97	EULA	US
54151ECOM	Denovo Ventures, LLC	101-130-WI	JD Edwards EnterpriseOne User Productivity Kit for Human Resources, Benefits	Per User/ Per Month	$177.97	EULA	US
54151ECOM	Denovo Ventures, LLC	101-131-WI	JD Edwards EnterpriseOne UPK for Time and Labor	Per User/ Per Month	$177.97	EULA	US
54151ECOM	Denovo Ventures, LLC		Other User Productivity Kit Content Materials				
54151ECOM	Denovo Ventures, LLC	101-132-WI	JD Edwards EnterpriseOne UPK Fundamentals for EnterpriseOne	Per User/ Per Month	$177.97	EULA	US

Denovo

☐ A check in this box indicates that this agreement has been changed from the original.

MASTER SERVICES AGREEMENT

THIS MASTER SERVICES AGREEMENT (this "***MSA***"), dated as of the [00] day of [month], [year] ("***Effective Date***"), is by and between DENOVO VENTURES, LLC, a Colorado limited liability company ("***Denovo***"), and [enter company name], a [enter state, enter corporation or LLC] (the "***Client***") (each a "***Party***" and together the "***Parties***").

RECITAL

Client desires to engage Denovo to provide certain products and services, and Denovo desires to provide such products and services, pursuant to the terms and conditions set forth herein.

AGREEMENTS

NOW, THEREFORE, in consideration of the recitals and mutual covenants contained herein and other good and valuable consideration, the receipt and sufficiency of which are hereby acknowledged, the parties to this MSA agree as follows:

1. ***Construction***. This MSA sets forth the general terms and conditions of the Agreement. For each service Denovo offers, there is a Supplement and a Statement of Work that sets forth more specifically the Services and Service Levels Denovo will provide the Client. If the Client requests software-as-a-service, hosting or other services that require a software product purchase, in addition to an SOW, Denovo will provide an Order Document. Each SOW and/or Order Document(s) combined with the corresponding Supplement and MSA shall constitute an independent contract. To the extent there are inconsistencies between the MSA, the Supplement and the SOW, and the Multiple Award Schedule (MAS), the Multiple Award Schedule contract will govern and control over the Supplement and the SOW. The terms and conditions of the Order Document apply exclusively to the products therein.

2. ***Definitions***. The bold and italicized terms are defined as follows. Capitalized terms not otherwise defined here shall be defined in the context in which they are used and shall have the meanings therein indicated. Capitalized terms not defined herein shall have the meaning attributed to them in the applicable Supplement, Attachment, SOW or Order Document.

(i) ***Aggregated Data***. Any aggregated and statistical data derived from the operation of the Services, including, without limitation, the number of records in the Service, the number and types of transactions, configurations, and reports processed in the Service and the performance results for the Service

(ii) ***Agreement.*** Each SOW, Order Document(s), and/or Multiple Award Schedule contract combined with the corresponding Supplement and the MSA

(iii) ***Change***. The addition, subtraction or change to any Services related to the SOW; a change that results in increased or reduced fees for applicable Services; and changes to the Service Levels not agreed to as part of the SOW

(iv) ***Claim***. Third party claims against the Client that any Work Product infringes a presently existing United States copyright or constitutes misappropriation of unlawful disclosure or use of a third party's trade secrets

(v) ***Client Applications.*** All software programs, including any source code for such programs, that the Client or the Client's clients provide in connection with the Hosting Services

(vi) ***Client Data.*** Client's Confidential Information and all text, files, images, graphics, information, data, illustrations, personal data, video, audio, photographs, and other content and material in any format, provided or uploaded by the Client in connection with the Agreement

(vii) ***Confidential Information***. Any proprietary information or data (including the terms of the Agreement), Trade Secrets (as defined below) and any other information designated as confidential by either Party is considered confidential

(viii) ***Denovo Background Materials***. The various concepts, ideas, recommendations, methods, methodologies, procedures, processes, know-how and techniques, templates, programs, the generalized features of the structure, sequence and organization of software, user interfaces and screen designs, development tools (including without limitation general purpose consulting and software tools), utilities and routines, and logic, integrations, coherence and methods of operation of systems that Denovo has created, acquired or otherwise has rights in, and may, in connection with the performance of Services hereunder, employ, provide, modify, create, or acquire or otherwise obtain rights in

(ix) ***Denovo Intellectual Property***. Denovo Background Materials or any of its other intellectual property or property

(x) ***Dispute***. Any dispute, claim or controversy arising out of or relating to the Agreement, including without limitation a dispute regarding an alleged breach of the Agreement and a dispute regarding the arbitrability of the Dispute Resolution section

(xi) ***Fees*** or ***Charges***. Any fees or charges for the Services and/or Software Products described in the Multiple Award Schedule Contract.

(xii) ***Law***. Any declaration, decree, directive, legislative enactment, order, ordinance, regulation, rule or other binding restriction of or by any Federal, state, municipal, local, territorial, or other governmental department, regulatory authority, judicial or administrative body, whether domestic, foreign or international

(xiii) ***Order Document.*** A document setting forth software products and pricing as established in the Multiple Award Schedule Contract.

(xiv) ***Service***. Generally, all of the services Denovo agrees to provide the Client as set forth in the SOW

(xv) ***Statement of Work*** or ***SOW***. A statement of work that sets forth more specifically the Services and Service Levels Denovo will provide the Client.

(xvi) ***Supplement***. An addendum that provides terms and conditions specific to one line of service that Denovo offers

(xvii) ***Termination Date***. The date on which the Agreement is terminated or expires

(xix) ***Trade Secrets***. Denovo' trade secrets including, without limitation, various computer systems and programs, techniques, developments, improvements, inventions, and processes that are, or may be, produced in the course of Denovo's operations, including any other information not generally known concerning Denovo or its operations, including, products, suppliers, markets, sales, internal costs, costs, margins, profits, client

needs and lists, and the pricing information made available in the Agreement or other information acquired, disclosed, or made known to employees or agents while in the employ of Denovo, which, if used or disclosed, could adversely affect Denovo's business or give competitors an advantage.

(xx) ***Work Product***. Any software modifications, enhancements, interfaces, together with related specifications, design documents, flow charts, documentation, training manuals, reports, and other tangible work product developed by Denovo with Denovo Intellectual Property for the Client

3. ***Scope of Services***. Denovo offers services including, without limitation, consulting services, hosting services, software-as-a-service, managed services and disaster recovery services. Denovo agrees to provide one or more of these services as set forth in the applicable SOW on the terms and conditions set forth in the Agreement. Denovo also offers cloud hosting solutions. The Parties agree that the Services may include advice and recommendations, but all decisions in connection with the implementation of such advice and recommendations shall be the responsibility of, and made by, the Client. Such Services are exclusively for the use of the Client and any of its employees or authorized users.

4. ***Payment***.

(a) ***Fees and Expenses***. Each SOW or Order Document shall set forth the Fees as established by the Multiple Award Schedule Contract.

(b) ***Invoices***. Denovo will provide the Client with an invoice from time to time or when specified in the SOW. Each invoice shall set forth the Fees and Expenses owed to Denovo in reasonable detail, the SOW and/or Order Document reference numbers, and, when applicable, the number of hours spent by Denovo personnel in providing the Services during the period invoiced.

(c) ***Method of Payment***. Unless otherwise agreed to in writing by both Parties, all amounts to be paid to Denovo under the Agreement shall be paid in U.S. dollars and may be made using electronic or automated clearing house (ACH), automatic bill pay mechanisms, or by federal wire transfer to the account or accounts designated in the applicable invoice. If no such account is designated in an invoice, payment should be made to the account below:

Denovo Ventures, LLC
ACH/Wire: CIT Bank, N.A.
ABA/Routing: 322270288
Account: 1822000629
Beneficiary CIT Customer Account Name: Denovo Ventures, LLC

For international wire instructions please contact AR@Denovo-us.com

5. ***Term and Termination***.

(a) ***Term***. This MSA shall commence on the Effective Date and remain in effect for the Term as set forth under the Multiple Award Schedule Contract. unless earlier terminated in accordance with the Multiple Award Schedule Contract.

(b) ***Termination for Cause by Either Party***. Either Party may terminate the Agreement as provided by the Multiple Award Schedule Contract.

6. ***Employment Matters.***

(a) ***Independent Contractor.*** Denovo shall provide Services as an Independent Contractor and nothing contained herein shall be construed to create a relationship of employer-employee or principal-agent. Neither Party is, nor shall represent itself to be, an agent, partner, fiduciary, joint venture, co-owner or representative of the other.

7. ***Assignment and Subcontracting.***

(a) Neither Party shall assign any portion of the Agreement without the express and prior written consent of the other Party.

8. ***Confidentiality.***

(a) ***General.*** Any proprietary information or data (including the terms of the Agreement), Trade Secrets (as defined below) and any other information designated as confidential by either Party is considered confidential (***"Confidential Information"***). To the extent that either Party comes into possession of any Confidential Information of the other Party in connection with the Agreement, such Party agrees to use the Confidential Information of the other Party solely for the purposes of the Agreement, and will not disclose such Confidential Information to any third party except as required under the Freedom of Information Act (FOIA) and (e) below.

(b) ***Exclusions.*** Notwithstanding any provision herein to the contrary, Confidential Information shall not include information that (i) is or becomes publicly available (other than by breach of the Agreement), (ii) was disclosed to the receiving Party on a non-confidential basis from a source other than the disclosing Party, which the receiving Party reasonably believes is not prohibited from disclosing such information as a result of an obligation in favor of the disclosing Party, (iii) is developed by the receiving Party independent of and without reference to any Confidential Information of the disclosing Party, or was known by the receiving Party prior to any disclosure of such information made by the disclosing Party, in each case as evidenced by the receiving Party's written records, or (iv) is disclosed with the written consent of the owner of the Confidential Information.

(c) ***Protection.*** Each Party shall maintain the confidentiality of the Confidential Information of the other Party using at least the same degree of care as it employs in maintaining the confidentiality of its own Confidential Information, but in no event less than a reasonable degree of care.

(e) ***Compelled Disclosure.*** Notwithstanding the above, the receiving Party shall not be in violation of this confidentiality obligation with regard to a disclosure that was in response to a valid order of a court of competent jurisdiction, administrative agency or governmental body, or by any law, rule or regulation, or by subpoena, summons or any other administrative or legal process, or by applicable regulatory or professional standards, provided that the receiving Party provides the disclosing Party with reasonably prior written notice of such disclosure in order to permit the disclosing Party to seek confidential treatment of such information.

(f) ***Trade Secrets.*** Denovo employs trade secrets including, without limitation, various computer systems and programs, techniques, developments, improvements, inventions, and processes that are, or may be, produced in the course of Denovo's operations, including any other information not generally known concerning Denovo or its operations, including, products, suppliers, markets, sales, internal costs, costs, margins, profits, client needs and lists, and the pricing information made available in the Agreement or

other information acquired, disclosed, or made known to employees or agents while in the employ of Denovo, which, if used or disclosed, could adversely affect Denovo's business or give competitors an advantage (***"Trade Secrets"***). Such Trade Secrets contain privileged or confidential commercial or financial information that would result in a competitive disadvantage if disclosed without prior permission by Denovo. Because it would cause irreparable harm to Denovo if any of its Trade Secrets were known to its competitors, it is Denovo's policy that the Trade Secrets not be disclosed to any party other than the Client. In the event that the Client is a public entity and awards a contract to Denovo, the Client shall have the right to disclose as required pursuant to the Freedom of Information Act (FOIA).

9. ***Ownership of Intellectual Property***.

(a) ***Denovo Ownership***.

(i) To the extent that Denovo uses Denovo Background Materials or any of the Denovo Intellectual Property in connection with the performance under the Agreement, Denovo shall retain all right, title and interest in and to Denovo Intellectual Property.

(ii) All rights, title and interest in **Work Product** (installed and configured software and documentation) shall vest in Denovo unless otherwise expressly provided in the applicable SOW.

(iii) Except for any license expressly granted in the Agreement, neither the Client nor any third party shall acquire right, title or interest in or to Denovo Intellectual Property or Work Product (installed and configured software and documentation).

(b) ***Client Ownership***. The Client shall retain all right, title or interest to the Client Data.

(c) ***Infringement Indemnity***.

(i) ***Infringement Indemnity***. Denovo agrees to hold harmless the Client against Claims so long as the Client promptly notifies Denovo in writing of the Claims. Denovo pay any costs or damages that may be finally awarded by a court of competent jurisdiction against the Client. Denovo will not indemnify the Client, however, if the Claim is caused by (i) the Client's misuse or modification of the deliverables in a manner that causes the infringement; (ii) the Client's use of the deliverables in combination with any hardware, software or information not owned or developed by Denovo; (iii) the Client's failure to use corrections or enhancements to such deliverables made available by Denovo, (iv) the Client's distribution, marketing or use for the benefit of third parties of such deliverables or (v) information, specifications, software or materials provided by the Client or a third party. If any deliverable constituting a portion of the Work Product is, or in Denovo's judgment is likely to become, the subject of a Claim, Denovo, at its expense and option, shall either (a) procure the right for the Client to continue using it, (b) replace it with a non-infringing equivalent, (c) modify it to make it non-infringing, or (d) direct the return of the Work Product and refund to the Client the fees paid for such Work Product less a reasonable amount for the Client's use of the Work Product up to the time of return.

(ii) ***Exclusive Remedy***. The foregoing constitutes the Client's sole and exclusive remedy and Denovo's entire liability with respect to infringement claims.

11. ***Limitation of Liability***.

(a) ***Limitation of Liability***. EXCEPT FOR INDEMNIFICATION CLAIMS AND MATTERS RELATING TO BREACHES OF THE SECTIONS ON INTELLECTUAL PROPERTY AND/OR CONFIDENTIALITY, IF DENOVO SHALL BE LIABLE TO THE CLIENT FOR ANY MATTER RELATING TO OR ARISING FROM THE AGREEMENT, WHETHER BASED UPON AN

ACTION OR CLAIM IN CONTRACT, WARRANTY, EQUITY, NEGLIGENCE, INTENDED CONDUCT OR OTHERWISE, THE AGGREGATE AMOUNT OF DAMAGES RECOVERABLE AGAINST DENOVO WITH RESPECT TO ANY AND ALL BREACHES, PERFORMANCE, NONPERFORMANCE, ACTS OR OMISSIONS HEREUNDER WILL NOT EXCEED THE AGGREGATE AMOUNT OF FEES ACTUALLY PAID BY THE CLIENT TO DENOVO UNDER THE SOW OR ORDER DOCUMENT PURSUANT TO WHICH DENOVO IS PERFORMING THE SERVICES OR SELLING THE PRODUCTS GIVING RISE TO SUCH BREACH.

(b) ***Exclusion of Damages***. IN NO EVENT SHALL EITHER PARTY OR ITS PERSONNEL BE LIABLE FOR CONSEQUENTIAL, SPECIAL, INDIRECT, INCIDENTAL, PUNITIVE OR EXEMPLARY DAMAGES, COSTS, EXPENSES, OR LOSSES (INCLUDING, WITHOUT LIMITATION, LOST PROFITS AND OPPORTUNITY COSTS) NOR SHALL THEY BE LIABLE FOR ANY CLAIM OR DEMAND AGAINST THE OTHER PARTY BY ANY THIRD PARTY EXCEPT AS OTHERWISE SPECIFICALLY STATED HEREIN. THE PROVISIONS OF THIS SECTION SHALL APPLY REGARDLESS OF THE FORM OF ACTION, DAMAGE, CLAIM, LIABILITY, COST, EXPENSE, OR LOSS, WHETHER IN CONTRACT, STATUTE, TORT (INCLUDING, WITHOUT LIMITATION, NEGLIGENCE), OR OTHERWISE.

(c) ***Limitation on Actions***. No action, regardless of form, arising under or relating to the Agreement, may be brought by either Party more than one year after the event giving rise to the cause of action has occurred, except that an action for non-payment may be brought by a Party not later than one year following the date of the last payment due to such Party hereunder.

(d) ***Subcontractor Liability***. The exclusions and limitations of liability under the Agreement will operate to the benefit of Denovo's subcontractors under the Agreement to the same extent that such provisions operate to the benefit of Denovo. Any limitations of liability hereunder will be computed for Denovo and its subcontractors in the aggregate. Denovo's subcontractors shall be deemed third-party beneficiaries of this Section.

12. ***Insurance***. Denovo shall at its own expense maintain commercial automobile liability insurance and either commercial general liability insurance or, if necessary, professional liability insurance with minimum coverage as outlined below:

(a) ***Business Automobile Liability***. Covering all vehicles that Denovo owns, hires, or leases with a limit of no less than $1,000,000 per accident/employee.

(b) ***Commercial General Liability***. Including Contractual Liability Coverage, with coverage for products liability, completed operations, property damage and bodily injury, including death, with a minimum limit of no less than $1,000,000 each occurrence and a minimum limit of $2,000,000 in the aggregate.

(c) ***Professional Liability Insurance***. Including Errors and Omissions coverage with a limit of no less than $5,000,000 per occurrence and in the aggregate.

14. ***Authority***. Denovo represents and warrants to the other that (i) it is duly organized, validly existing and in good standing under the laws of the state in which it is organized or incorporated, (ii) it has all requisite power and authority to enter into the Agreement and to perform its obligations hereunder, and the execution of the Agreement and (iii) it has been duly authorized to consummate the transactions contemplated in the Agreement.15. ***Law and Regulation***. Each Party shall be responsible for obeying Laws applicable to its business, including, without limitation, data privacy, intellectual property, employment and tax laws.

16. ***Miscellaneous***.

(a) ***Modification***. The Agreement may not be modified or amended except by a Supplement or other written instrument executed by or on behalf of each of the Parties to the Agreement which specifically states that it amends the Agreement.

(b) ***Waiver***. The failure of either Party to insist upon strict performance of any of the provisions contained in the Agreement shall not constitute a waiver of its rights as set forth in the Agreement, at law or in equity, or a waiver of any other provisions or subsequent default by the other Party.

(c) ***Survival***. The provisions of Sections 4, 6, 7, 8, 9, 10, 11, 13, 15, 16 and 17 shall survive, notwithstanding the termination or invalidity of the Agreement for any reason.

(d) ***Entire Agreement***. The Agreement, including any addenda, exhibits, attachments, Supplements, SOWs Schedules, and the Multiple Award Schedule Contract, constitutes the entire agreement between Denovo and the Client with respect to the subject matter hereof and supersedes all other oral and written representations, understandings or agreements relating to the Agreement.

(e) ***Force Majeure***. Except for payment of money, neither Party shall be liable for any delays or other non- performance resulting from circumstances or causes beyond its reasonable control, including, without limitation, acts or omissions of the other Party or third parties, fire or other casualty, act of God, strike or labor dispute, war or other violence, or any law, order or requirement of any government agency or authority.

(f) ***Notices***. Wherever under the Agreement one Party is required or permitted to give notice to the other Party, such notice shall be in writing and shall be delivered personally, sent by facsimile transmission, sent by nationally recognized express courier, sent by certified mail (return receipt requested), or sent by email. Any such notice shall be deemed given when actually received and shall be addressed as follows:

If to Client:

_____
_____
_____
Attention: _____
Facsimile: _____

If to Denovo:

Denovo
6400 Lookout Road, Suite 101
Boulder, CO 80301
Attention: Legal Department Email:legal-notices@denovo-us.com

With a copy to:

Sloan & Roberts, PLLC Attention: Andrew Roberts 5151 Belt Line Road
Suite 1050
Dallas, Texas 75254-6738 214-987-6070
214-987-6071 fax
Email: andrew@sloanandroberts.com

Either Party may change its address for notices upon giving written notice of the change to the other Party in the manner provided above.

(g) ***No Third Party Beneficiaries***. Nothing contained in the Agreement is intended to confer upon any person (other than the Parties hereto, the Indemnities specifically identified in Section 10, and any subcontractors expressly mentioned elsewhere in the Agreement) any rights, benefits or remedies of any kind or character whatsoever, and, except as otherwise specifically stated herein, no person shall be deemed a third party beneficiary under or by reason of the Agreement.

(h) ***Counterparts***. The Agreement may be executed in two or more counterparts, each of which shall be deemed to be an original, but all of which together shall constitute one agreement binding on the Parties, notwithstanding that both Parties are not signatories to the original or the same counterpart. A facsimile or other electronic copy of a signature on the Agreement shall be acceptable as and deemed to be an original signature.

(i) ***Severability***. If any term or condition of the Agreement or the application thereof to any person(s) or circumstances is held invalid, such invalidity shall not affect other terms, conditions or applications which can be given effect without the invalid term, condition or application. To this end, the terms and conditions of the Agreement are declared severable.

[SIGNATURE PAGE TO FOLLOW]

Denovo

IN WITNESS WHEREOF, Denovo and the Client have executed this MSA as of the date first set forth above.

DENOVO VENTURES, LLC

By: _____

Name: _____

Title: _____

Date: _____

[CLIENT]

By: _____

Name: _____

Title: _____

Date: _____

Denovo

☐ A check in this box indicates that this agreement has been changed from the original.

HOSTING SERVICES STATEMENT OF WORK

This HOSTING SERVICES STATEMENT OF WORK ("***Hosting Services SOW***"), dated as of [00] day of [month], [year] ("***Effective Date***"), is by and between DENOVO VENTURES LLC, a Colorado limited liability company ("***Denovo***"), and [enter company name], a [enter state, enter corporation or LLC] (the "***Client***") (each a "***Party***" and together the "***Parties***").

Pursuant to Section 3 (Scope of Services), in the Master Services Agreement (MSA) and the applicable Hosting Services Supplement, Denovo and Client desire to enter this Statement of Work for the performance by Denovo of certain enterprise hosting services, described herein. This Statement of Work provides details of the Services, related Products if any, Definitions, Service-specific terms, the responsibilities of the party's one- time and recurring fees, Change Order Process, and third party license agreements as applicable.

1. ***Definitions.***

As used in this Statement of Work the following terms shall have the respective meanings set forth herein. Other terms used in this Statement of Work are defined in the context in which they are used and shall have the meanings therein indicated.

(i) ***Agreement.*** Each SOW and/or Order Document(s) combined with the corresponding Supplement Multiple Award Schedule Contract and MSA shall constitute an independent task order contract

(ii) ***Change***. The addition, subtraction or change to any Services related to the SOW; a change that results in increased or reduced fees for applicable Services; and changes to the Service Levels not agreed to as part of the SOW

(iii) ***Change Order Process***. The process by which Changes are made to the Services and more fully described in Section 18 of the SOW

(iv) ***Change Order Request*** or ***COR***. The form the Parties will use to communicate changes to the Services. The Change Order Process is defined in Section 18 of this Statement of Work

(v) ***Customer Care Portal***. A web based service that allows Clients to report problems, request information and view system availability metrics.

(vi) ***Disaster***. An unplanned event or condition that causes a complete loss of availability to production environments hosted by Denovo

(vii) ***Hosting Services***. The services denoted as hosting services in the SOW and the services in connection with the ongoing computing infrastructure and infrastructure support services associated with providing reliable application

(viii) ***Incident***. An unplanned interruption or reduction in the quality of Services that adhere to severity levels set forth in Section 11 of this Statement of Work

(ix) ***Initial Term.*** The period effective from the primary Service Start Date to the planned Services termination date

(x) ***In-Scope.*** Services that are covered under the base agreement between Denovo and Client

(xi) ***Out-Of-Scope.*** Services that are NOT defined as Services under the base agreement between Denovo and Client, and that may require an additional Statement of Work

(xii) ***Service***. Generally, all of the services Denovo agrees to provide the Client as set forth in the SOW

(xiii) ***Service Availability Objective.*** The various specifics of services availability (including without limitation uptime objectives, and downtime credits), which is more fully described in the Hosting Services Supplement

(xiv) ***Service Start Date***. The date Denovo notifies Client (in writing via email) of environment readiness and enables access to the Services for Client use, and monthly recurring billing begins

(xv) ***SOW Term.*** The period of time beginning with the Service Start Date stated in this Statement of Work and continuing through the end of all Initial Term(s) and any renewal term(s).

2. ***Service Levels.*** Denovo will provide the Client with Services to support the Service Level Objectives set forth in Section 4 (Service Levels), of the Hosting Supplement. In addition, Denovo, in its discretion, will provide any services that are necessary to perform the Hosting Services and any additional services to which the Parties may mutually agree through the Change Order Process as set forth in Section 18 of the Hosting Statement of Work.

3. ***Monitoring of the Hosted Environment.*** Base monitoring for systems will be performed via ICMP, SNMP, XML, and/or SOAP for WMI agent queries where applicable. Monitoring is per interval, with thresholds. Monitoring requires in-band communications with the underlying operating system, and local administrative access or domain/group policy access with an administrative account.

Five (5) minute interval with thresholds (if available by device)

- Polling of IP address
- Polling of CPU usage. (LCL 0%, UCL 95%)
- Polling of swap memory usage. (LCL 0%, UCL 95%)
- Polling of physical memory usage. (LCL 0%, UCL 95%) ** NOTE** for Unix/Linux UCL 100%
- Polling of system latency from poller to device (LCL 0ms, UCL 500ms)
- Service monitoring, with per service event generation (all service monitoring is off by default services must be specified for event generation).
- Process monitoring; with per process event generation (all process monitoring is off by default; critical processes must be specified).

Fifteen (15) minute interval with thresholds where applicable (if available by device)

- Polling of interface statistics for IO throughput, (LCL -1%, UCL 94%)
- Polling of interface statistics for discards, (LCL -1, UCL 1000)
- Polling of interface statistics for errors (CRC, FCS, RUNT, JUMBO), (LCL -1, UCL 30)
- Polling of file system usage (LCL 0%, UCL 93%)
- One (1) hour interval or longer with thresholds where applicable (if available by device)

- Software package monitoring, revision and installation date
- Polling of chassis health (Power, Temp, Fan Status)

4. ***Management of the Hosted Environment.*** Denovo uses a variety of software tools to monitor the availability and performance of Client's production services environment and the operation of infrastructure and network components.

Denovo engineers will perform the following In-Scope services:

- Reactive Patch management addition or removal, including operating system, and drivers. Patching is driven by the necessity due to an incident or identified critical/exploited vulnerability
- Creation/removal of user accounts
- Creation/modification of scripts and/or batch files for log management, common tasks
- Group policy creation or modification for Active Directory or system roles
- Software package and licensing audits

Denovo is not responsible for the following Out-Of-Scope Services:

- General consultation and system design/architecture
- Major Release Upgrades for the Application (ie. 9.0 to 9.1, that would be a separate SOW)

5. ***Application installation***

Technical Managed Services. Denovo will provide the Client with Technical Managed Services including; Configurable Network Computing (CNC) and Database Administration (DBA) Services. In addition, Denovo, in its discretion, will provide any services that are necessary to perform the Technical Managed Services and any additional services to which the Parties may mutually agree through the Change Order Process.

Denovo has a knowledgeable and experienced team of CNC consultants to help the Client adapt software solutions to the Client's business requirements. With Denovo CNC Managed Services, the Client will receive system administration and expert technical support services, including package management, regular JD Edwards updates, performance monitoring and troubleshooting, without the business risk associated with depending too heavily on one individual. Our US-based Managed Services for the Client's JD Edwards applications will be provided through remote means, between the hours of 7:00 am – 5:00 pm Mountain Time Monday through Friday, excluding public holidays.

The following is a list of Technical Managed Services that are In-Scope:

Services EnterpriseOne	Frequency	Included	Denovo/CNC	Time Period
Printer Setup and Maintenance	As Needed	Yes	Yes	7AM-5PM
Development Package Build-Update(DV/PY)	3-Weekly	Yes	Yes	7AM-5PM
Development Package Build-Full(DV)	1-Monthly	Yes	Yes	7AM-5PM
Prototype Package Build-Full(PY)	1-Monthly	Yes	Yes	7AM-5PM
Production Package Build-Update	1-Weekly	Yes	Yes	7AM-5PM
Production Package Build-Full	1-Monthly	Yes	Yes	7AM-5PM
Environment Refresh-Data/Objects	1- Quarterly	Yes	Yes	7AM-5PM

Environment/Path Code/OMW Maintenance	As Needed	Yes	Yes	7AM-5PM
OCM Maintenance	As Needed	Yes	Yes	7AM-5PM
Purge PrintQ and log directories. Purge Workflow	Monthly	Yes	Yes	7AM-5PM
Technical Assistance and Troubleshooting	As Needed	Yes	Yes	7AM-5PM
Technical Assistance and Troubleshooting-Sev 1	As Needed	Yes	Yes	24/7
Services				
Installation of EnterpriseOne ESU's	As Needed	Yes	Yes	7AM-5PM
Installation of EnterpriseOne Tools releases	Annually	Yes	Yes	7AM-5PM
Installation of EnterpriseOne application updates	As Needed	Yes	Yes	7AM-5PM
Security Administration	As Needed	Yes	Yes	7AM-5PM
Technical Diagnosis/Performance/Design Improvements				
System Audit and Recommendation	Annual	Yes	Yes	7AM-5PM
Security Audit and Recommendation	Annual	Yes	Yes	7AM-5PM
Performance Tuning and Optimization	As Needed	Yes	Yes	7AM-5PM
Monitoring Services				
Infrastructure Monitoring	Ongoing	Yes	Yes	24/7

In order for Client's existing environment to qualify for managed Services, the following requirements must be met:

- All Servers, Desktop PC's and Notebooks/Laptops with Microsoft Windows Operating Systems must be running a supported version as it relates to the ERP version of the software and have all of the latest Microsoft Service Packs and Critical Updates installed. This is especially important as it relates to supported browser versions.
- All Desktop Software must be Genuine, Licensed and Vendor-Supported.
- The environment will have a currently licensed, up-to-date and Vendor-Supported server-based antivirus solution protecting all servers and developer workstations.

The following Services are NOT included and are considered Out-Of-Scope:

- The cost of any Software Renewal or Upgrade Fees of any kind.
- The cost of any 3rd party vendor or manufacturer support or incident fees of any kind.
- The cost to bring Client's environment up to minimum standards required for Services.
- Failure due to acts of God, building modifications, power failures or other adverse environmental conditions or factors not under control of Denovo employees.
- Maintenance of other application software packages besides EnterpriseOne.
- Programming (modification of software code) and program (software) maintenance unless as specified in the Services table.
- Training Services of any kind unless specified in the Services table.

6. ***Application Managed Services.*** Denovo will provide the Client with Application Managed Services including; JD Edwards functional support, Business Process Analysis, application configuration and troubleshooting. In addition, Denovo, in its discretion, will provide any services that are necessary to perform the Application Managed Services and any additional services to which the Parties may mutually agree through the Change Order Process.

Application Support Services allows our Clients to be supported by a Functional Expert in a particular area of an application, such as Financials, HR, One View Reporting, creating UPKs (videos on how a process works within JD Edwards from the end-users' perspective). With its extensive experience in JD Edwards' applications and technology, Denovo provides functional application support delivered as Application Managed Services.

Application Managed Services can help IT organizations to reduce costs while improving support of their Oracle JD Edwards (JDE) ERP environment.

Examples of Application Managed Services for JD Edwards include:

- Assistance with annual 1099 creation
- Help with reports (and/or One View Reporting)
- How to do a specific function within a specific module (eg. GL, A/R, A/P, Inventory Control, or any other JD Edwards Module)

Denovo's team is schooled in process development and process improvements, and we apply these skills in our Client engagements. By embracing a service model governed by Service Availability Objective, Denovo can transform the delivery of application support within an organization. These improvements enable Clients to reallocate scarce, expensive JD Edwards development/support skills to more critical tasks. Application support will then be delivered by experienced Denovo employees who are available 24x7x365 to help resolve EnterpriseOne production problems.

7. ***Development Managed Services.*** If applicable, Denovo will provide the Client with Development Managed Services including; custom report development, custom modifications to existing applications and custom application development of net new applications. In addition, Denovo, in its discretion, will provide any services that are necessary to perform the Development Managed Services and any additional services to which the Parties may mutually agree through the Change Order Process.

Denovo will adhere to Client's application development policies and procedures if they are provided, if not, Denovo will adhere to the industry best practices we use as our standard. Denovo will develop, recommend and document changes to Client's application development policies and procedures manuals.

8. ***Services Scheduling.*** Application and Development Managed Services hours are best used when scheduled for specific projects, such as building a necessary report, helping to confirm a workflow, used to train employees on a specific process within JD Edwards, etc. To get the most benefit from the monthly hours and ensure the right resources are available when needed by the Client organization, we schedule our resources as far in advance as possible. This scheduling allows us to allocate the right resources by reserving them one week (minimum) in advance of the project. Hours are allocated on a monthly basis and must be fully consumed within the month, or the hours will no longer be available.

This approach helps Clients and Denovo. Recognizing that hours not used will not be available in the following month, Clients make the effort to schedule work that needs to be done rather than pushing it off for "later". For Denovo, scheduling of staff is easier because Clients submit their requests earlier rather than waiting until the end of the year or end of the quarter

Reserving staff can be accomplished in two ways:

1. The Client chooses a task start date that works best for them and sends the schedule to Denovo via the Customer Care Desk (Service Desk). Activities can be scheduled anywhere from one week to several months in advance. Clients simply open a ticket with the specifics of what support

they need (training on using a specific feature within a module, general questions, guidance on a process, specific report details, etc.) and when they have blocks of time available (eg. Mon 8-12, Tue 2-4 and/or Thursday 3-5). Service tickets are then assigned to the corresponding Denovo resource. The Denovo resource will confirm with the Client the times that match both the Client and the Denovo schedule. This allows all parties to ensure that when they need to work on a specific item, they can with the resources they need available. Optionally, the Client can request assistance from the Denovo Account Representative or the Denovo Project Manager.

2. The Client can also open a ticket that requests immediate action. These requests are often done for smaller, time sensitive items, such as when an auditor requests a special report. In these special cases, the Client may send the details of what is needed, the timeline of when it is needed, and a few time slots during which this service can be performed.

Using the Customer Care Portal as the hub for Application Support and Application Development requests helps Clients and Denovo track progress, deliverables and the hours consumed.

9. ***Customer Care Services (a.k.a. "Service Desk")***

Customer Care Services are high priority for Denovo and the focal point for Client interaction. Customer Care provides first and second level support. Denovo handles support of JD Edwards and 3rd party products (front end analytics, reporting tools, integration tools, or others) as follows:

1. When a user has an issue, it is communicated (via phone, email or Customer Care Portal) to the Service Desk by creating a Service Ticket.
2. The Service Desk reviews the Service Ticket and assigns it to the person responsible for supporting that Service Area (e.g., JD Edwards Financials, HR, One View Reporting or 3rd party applications such as ADP, Fusion Middleware, Create!forms, etc.). Depending on the Service Area, Denovo may have one or more persons assigned to support that function. It may be unique to a specific Client (because of uniqueness in their business needs); it may be unique to release levels (some staff support older release and some support more current releases); or it may be a function of the Client's Service Level Agreement (some Clients may have specific named persons to support service areas).
3. The Denovo person responsible receives the Service Ticket through Denovo's automated workflow system and communicates with the Client immediately upon receipt that they have been assigned the Service Ticket and are working their issue. This may result in an exchange of dialog/e-mails to further understand the issue. The person responsible will be a person knowledgeable about Client's specific Service Area.
4. If the person responsible is not able to personally resolve the issue they will call upon other members of the Denovo team either in the same Service Area or in a cross-functional area if the specific issue may relate to something outside of the product in question (e.g. a JDE application is not performing as expected, but the person responsible determines that the issue is not a JDE Application issue but rather a integration middleware issue and needs assistance from another Service Area).
5. Once the issue is resolved, it will be documented both at the Service Desk and with the individual who requested the Service Request.

Support and Escalation - Denovo will respond to Client's tickets under the provisions of Service Level Standards, and with best effort after hours or on holidays. Client must open tickets via phone, email or our web portal to our Service Desk. Each service request will be assigned a Trouble Ticket number for tracking.

Service outside Normal Working Hours - Emergency services (Severity 1) may be performed outside of the hours of 7:00 am – 5:00 pm Mountain Time Monday through Friday, excluding public holidays, shall not be billed separately and are included in this service. All other Services will be performed during coverage hours.

10. ***Hosting Support Policy.***

The support described in this Hosting Support Policy applies only for Denovo Hosting Services. The following table shows the response time commitment for incident-based issues.

Incident / Severity Definitions	Severity Level	Response Time
Client's production use of the Denovo Hosting Service is stopped or so severely impacted that Client cannot reasonably continue work. Client experiences a complete loss of service. The impacted operation is mission critical to the business and the situation is an emergency. A Severity 1 service request has one or more of the following characteristics: 1. Data corrupted 2. A critical documented function is not available 3. Service hangs indefinitely, causing unacceptable or indefinite delays for resources or response 4. Service crashes, and crashes repeatedly after restart attempts Denovo will use reasonable efforts to respond to Severity 1 service requests within 15 Minutes. Denovo will work 24x7 until the Severity 1 service request is resolved, a reasonable work-around is put in place, or as long as useful progress can be made. Client must provide Denovo with a contact during this 24x7 period to assist with data gathering, testing, and applying fixes. Client is required to propose this severity classification with great care, so that valid Severity 1 situations obtain the necessary resource allocation from Denovo.	**Severity 1**	1 Hour
Client experiences a severe loss of service. Important features of the Denovo Hosting Services are unavailable with no acceptable workaround; however, operations can continue in a restricted fashion.	**Severity 2**	1 Hours
Client experiences a minor loss of service. The impact is an inconvenience, which may require a workaround to restore functionality.	**Severity 3**	4 Hours
Client requests information, enhancement, or documentation clarification regarding the Denovo Hosting Service, but there is no impact on the operation of such service. Client experiences no loss of service.	**Severity 4**	8 Hours

At the time Denovo accepts a service request, Denovo will record an initial severity level of the service request based on the above severity definitions. Denovo's initial focus, upon acceptance of a service request, will be to resolve the issues underlying the service request. The severity level of a service request may be adjusted.

If, during the service request process, the issue no longer warrants the severity level currently assigned based on its current impact on the production operation of the applicable Hosting Service, then the severity level will be downgraded to the severity level that most appropriately reflects its current impact.

If, during the service request process, the issue warrants the assignment of a higher severity level than that currently assigned based on the current impact on the production operation of the applicable Hosting Service, then the severity level will be upgraded to the severity level that most appropriately reflects its current impact.

Client's shall ensure that the assignment and adjustment of any severity level designation is accurate based on the current impact on the production operation of the applicable Hosting Service. Customer acknowledges that Denovo is not responsible for any failure to meet performance standards caused by Customer's misuse or misassignment of severity level designations.

For service requests that are escalated to the next level manager, the Denovo support analyst will engage the Denovo service request escalation manager who will be responsible for managing the escalation. The Denovo service request escalation manager will work with the Client to develop an action plan and allocate the appropriate Denovo resources. If the issue underlying the service request continues to remain unresolved, the Client may contact the Denovo service request escalation manager to review the service request and request that it be escalated to the next level within Denovo. To facilitate the resolution of an escalated service request, the Client is required to provide contacts within the Client's organization that are at the same level as that within Denovo to which the service request has been escalated.

Client questions or requests for an exception to the Denovo Hosting and Delivery Policy must be made via a service request.

Hosting Support Tiers - The following details and describes our Support Tier levels:

Support Tier	Description
Tier 1 Support	All support incidents begin in Tier 1, where the initial trouble ticket is created. The issue is identified and clearly documented, and basic hardware/software troubleshooting is initiated.
Tier 2 Support	All support incidents that cannot be resolved with Tier 1 Support are escalated to Tier 2, where more complex support on hardware/software issues can be provided by more experienced engineers.
Tier 3 Support	Support Incidents that cannot be resolved by Tier 2 Support are escalated to Tier 3, where support is provided by our most experienced, senior engineers who have the ability to collaborate with 3rd party (vendor) support engineers to resolve the most complex issues.

11. ***Backups.*** Denovo uses IBM Tivoli Storage Manager (TSM), a client/server tool for backing up and/or archiving data from various machines to a central server or tape. TSM performs a full back up the first time it backups a client's environment. After that it performs incremental backups or selective backups depending upon Client requirements. By default, Denovo will keep 14 versions of Client production data and 7 versions of Client test and development data. Two sets of tapes are created for each backup, with one being stored off- site for archiving purposes and one stored onsite for recovery and restore purposes. By default, Denovo uses an indefinite archiving and retention period, thus, we do not reuse archive tapes.

Backups are run nightly on all servers. Tapes are duplicated and sent off site daily. Any Client proposed Changes to Denovo's backup and retention policies require the Client to submit a Change Order Request. Denovo can help with best practices but it is up to the Client to determine acceptable policies. Denovo will monitor the Client's backups and an event will be triggered and a ticket opened after two consecutive failed backups. Engineers have 16 business hours to start work on the failed backups. Client assistance may be needed to help resolve the issue. If a new Device (Physical or Virtual) is needed to be backed up, a new Change Order Request must be submitted.

12. ***Disaster Recovery.*** Denovo is committed to minimizing down time due to any disasters or equipment failures. Disaster Recovery services are intended to provide service restoration capability in the case of a major disaster, as declared by Denovo, that leads to loss of a data center and corresponding service unavailability. These Disaster Recovery services apply only to Client production environments hosted by Denovo.

For the purposes of this policy, a "disaster" means an unplanned event or condition that causes a complete loss of availability to production environments hosted by Denovo. Denovo Hosting Services maintains a redundant and resilient infrastructure designed to maintain high levels of availability and to recover services in the event of a significant disaster or disruption. Denovo designs its Hosting services using principles of redundancy and fault-tolerance with a goal of fault-tolerance of a single node hardware failure.

Denovo Hosting Services can provide an infrastructure that incorporates a comprehensive data backup strategy. The Denovo Hosting can include redundant capabilities such as power sources, cooling systems, telecommunications services, networking, application domains, data storage, physical and virtual servers, and databases.

Denovo has three separate data centers that can function as primary and secondary sites for Denovo Hosting Services. Customer's production standby (secondary site) environment will reside in a data center separate from Customer's primary site. Denovo will commence the disaster recovery plan under this policy upon its declaration of a disaster, and will attempt to recover the production data and use reasonable efforts to re- establish the production environment at the secondary site.

Customer data is replicated in physically separate facilities in order to restore full services in the event of a disaster at a primary site. Backups are for Denovo's use in the event of a disaster.

Disaster recovery operations apply to the physical loss of infrastructure at Denovo facilities. Denovo reserves the right to determine when to activate the Disaster Recovery Plan. During the execution of the Disaster Recovery Plan, Denovo provides regular status updates to the Client.

(a) ***Disaster Recovery Services*** Denovo provides two options for Disaster Recovery: (1) "Instant Recovery" and (2) "Traditional Recovery". Descriptions of both offerings are listed below. Denovo will use one of several data centers for Disaster Recovery Services.

(i) ***Instant Recovery – Option One*** Instant recovery is designed to offer the quickest Recovery Time Objective (RTO). Depending upon the volume of servers to recover, the servers can be online and ready within three (3) hours. This solution also offers the most aggressive Recovery Point Objectives (RPO) in the industry and is designed to continuously replicate your data to our disaster recovery site. Continuous replication ensures near instant recovery. Another key benefit of Instant Recovery is the simplicity of fail back. After the disaster has been cleared, Client will have the ability to instantly fail back to the main data center without data loss and minimal outage.

(ii) ***Traditional Recovery – Option Two*** Traditional recovery is designed to be a more cost effective solution with less aggressive RTO and RPO. Traditional Recovery uses a tape recovery system to rebuild the environment if a Disaster Recovery is declared. There are different levels of RPO which Client can select, with the most common option being 24 hours. This solution is designed to have an RTO of 72-hours. Using Traditional Recovery, the fail back to the primary data center will require a tape "backup and restore" at the main data center.

(b) ***Recovery Details*** The disaster recovery service will utilize one of Denovo's data centers or a partner service, depending on the final requirements developed by Client and Denovo. Client will be entitled to one 48- hour recovery rehearsal per year, with 90-day notice. Denovo Disaster Recovery services are designed to allow connections from anywhere in the world so there is no need to travel to a Disaster Recovery site. This design helps reduce costs and increase the ability to meet aggressive RTOs.

(c) ***Recovery Time Objective*** Recovery time objective (RTO) is the maximum period of time between Denovo's decision to activate the recovery processes under this Policy to failover the service to the point at which Customer can resume production operations. If the decision to failover is made during the period in which an upgrade is in process, the RTO extends to include the time required to complete the upgrade. The RTO does not apply if any data loads are underway when the disaster occurs.

(e) ***Recovery Point Objective.*** Recovery point objective (RPO) the maximum period of data loss measured as the time from which the first transaction is lost until Denovo's declaration of the disaster.

Note: the RTO and RPO do not apply to Client customizations that depend on external components or third-party software. During an active failover event, non-critical fixes and enhancement requests are not supported. Customer will be solely responsible for issues arising from third party software and customizations to programs.

(f) ***Disaster Recovery Objectives.*** The following are the Denovo's disaster recovery support objectives:

(i) Denovo's top priority and objective is human health and safety.

(ii) Maximize the effectiveness of contingency operations through the established disaster recovery plan:

- Detect the service disruption or outage, determine the extent of the damage and activate the plan.
- Support the restoration of temporary operations, at a secondary site if applicable.
- Support the restoration of processing capabilities and resume operations.

(g) ***Disaster Recovery Costs*** For a summary of Disaster Recovery fees, please refer to Section 15 (Service Fees).

13. ***Assumptions and Limitations***

Additional support beyond the items covered under this SOW may be purchased from Denovo per the terms of the Multiple Award Schedule Contract.

Client is responsible for understanding sizing requirements for their environment. Denovo assumes Client has a general understanding and working knowledge of:

- Networking protocol (TCP, UDP, IP)
- Firewall policies
- Storage allocation requirements
- Operating system fundamentals

Denovo shall provide one (1) training session for multiple individuals via a web session. Additional requests for training may be subject to time and material fees as set forth in the Multiple Award Schedule Contract.

Client shall provide assistance in testing environment to ensure it is environment ready. Client shall provide all application support (Such as: updates, fixes, troubleshooting, etc.).

Any Change implemented by the Client that could affect the performance of Denovo's tools (i.e. management, monitoring, backup, anti-virus, etc.) or Denovo's ability to monitor/manage/support the environment must be agreed to by both parties, in writing, prior to implementation.

Client shall be responsible for all disaster recovery planning and services, including processes, equipment and performance. Disaster Recovery is not included unless specifically noted in this SOW, at which point, Client shall be responsible for recovery planning within the Client's company and environment as well as testing at least once a year.

Client is responsible for data migration of existing data.

Client shall advise Denovo of regulatory requirements or obligations which may affect Denovo's provision of the Services.

Denovo is not responsible for any Outage caused by other activities Client directs, denial of Service attacks, national or worldwide incidents of computer Viruses, natural disasters, changes resulting from government, political, or other regulatory actions or court orders, strikes or labor disputes, acts of civil disobedience, acts of war, acts against parties (including carriers and Denovo's other vendors), and other force majeure items as set forth under Denovo's Master Services Agreement provided that Denovo utilizes commercially reasonable efforts under the circumstances to minimize the impact of the force majeure event on the Client.

Client will not use, or permit use of, the Services in a manner, which is (i) illegal; (ii) infringes the patent, copyright, trademark, confidential information or intellectual property rights of a third party; or (iii) violates general standards of behavior on the Internet, collectively "Service Misuse". Client shall be responsible for any such Service Misuse and indemnify Denovo, its employees, affiliates, agents, licensors, suppliers and subcontractors against any liabilities arising from or relating to any such Service Misuse.

Client's system will have potential security vulnerabilities, even with the Services, including, but not limited to, the vulnerability of Client's network or systems to (i) access by persons within Client's organization which exceeds the authority granted to such persons; (ii) snooper attacks by persons granted access by Client to its network to obtain and misuse access codes, passwords and other data; (iii) physical access to equipment at Client sites; and
(iv) access to passwords and similar information that is written down or otherwise not afforded an appropriate level of protection by Client. Denovo does not guarantee that the Services will eliminate all risk or prevent damage from network or system security breaches such as the above.

14. ***Service Fees***

The following table outlines proposed one-time and monthly fees based on the Service options selected. Fees will commence the month following the Service Start Date. Taxes are not included. All fees are in U.S. dollars.

Denovo

Service Description	One Time Setup Fee	Monthly Fees
Denovo Hosting Services (Private Cloud) This service includes hardware, software, OS, application monitoring, proactive performance monitoring, 24/7- production support, Service Desk support, trouble tickets, Customer Care Portal, OS patching and OS upgrades. Denovo Hosting Services are described in ***Section 3 (Service Levels)***, ***Section 4 (Monitoring of the Hosted Environment)***, and ***Section 5 (Management of the Hosted Environment),*** of the Hosting Services Statement of Work.	[$0000]	[$0000]
Technical Managed Services This service includes 24/7-production support and all CNC and DBA services. Denovo Technical Managed Services are described in ***Section 6 (Technical Managed Services),*** of the Hosting Services Statement of Work.		[$0000]
Application Managed Services This service may include application functional support, business process analysis, application configuration and troubleshooting. Application Managed Services are described in ***Section 7 (Application Managed Services)*** of this Hosting Services Statement of Work.		[$0000]
Development Managed Services This service may include custom modification or application development services. Denovo Development Managed Services are described in ***Section 8 (Development Services)*** of this Hosting Services Statement of Work.		[$0000]
Disaster Recovery Services Includes Disaster Recovery Services Option [1] or [2] RTO: [00] hours RPO: [00] hours Denovo Disaster Recovery Services are described in ***Section 13*** **(Disaster Recovery)** of the Hosting SOW.		[$0000]
Oracle JD Edwards Software		
Total One Time Setup	[$0000]	
Total Ongoing Monthly		[$0000]

(a) ***Fee Payment Schedule for Hosting Services.*** Unless otherwise specified, Denovo will invoice the Client on quarterly (3 Month) basis for Hosting Services to be delivered over the following three months, on the first of the month, commencing the month of the Service Start Date at the rates specified in ***Section 15.***

(b) ***Fee Payment Schedule for Consulting Services.*** Unless otherwise specified, Denovo will invoice the Client on a Bi-weekly basis, at the hourly rate specified in Section 15 (Service Fees), for additional Consulting Services delivered, but not included in the base agreement.

15. ***Pricing Assumptions.*** If it is necessary for Denovo to provide Time and Materials (T&M) Services for additional Client network discovery, the Denovo Professional Consulting Services group will provide a separate Statement of Work that defines timelines, tasks and the services rate per hour required to complete the work per the hourly rates established under the Multiple Award Schedule contract.

Client is responsible for proper execution of the agreement, any omission of pre-requisites or addition of services by Client shall result in a project Change Order Request, or support will be best effort on a next business day basis.

Additional Services requested by Client and added to the SOW within 90 days of Client's and Denovo's acceptance of the SOW ("Acceptance") will be priced according to the fees established under the Multiple Award Schedule Contract. Any additional Services requested by Client after 90 days from the date of Client and Denovo's Acceptance of the SOW will be subject to the ~~then current~~ rates for such Services set forth in the Multiple Award Schedule Contract.

Additional Services may be added or deducted via the Change Order Request process as defined in ***Section 8*** of this Statement of Work.

16. ***Statement of Work Acceptance.***

Subject to the notice provisions below, Denovo reserves the right to modify or discontinue Services and to introduce new Services and features. Denovo may make available to Client all new services and features offered to all of our other clients. Denovo may, in our sole discretion, discontinue a Service at any time. Denovo will give the Client 90 days' notice of the discontinuance of a Service. Discontinuance does not affect Orders accepted prior to the date of discontinuance, but new Orders for a Service will not be accepted after the date the Service is discontinued.

Denovo may, in our sole discretion, modify a Service from time to time, for example to work with new third party products and services and to stay current with changing standards. Denovo will give the Client 30 days written notice of the modification of a Service and of substantive modifications to a Service Description. Such modifications will affect both existing Services and new Orders. Within sixty (60) days of receipt of a notice of modification to a Service, Client may cancel Order(s) for that Service without liability for cancellation charges if the modification has made the Service materially less useful to Client.

17. ***Change Order Process.***

A Change Order Request ("***COR***") is the method by which either Party may communicate and eventually effectuate Changes to the Services. Please see the Change Order Request form. Only a duly warranted contracting officer may request a Change on behalf of the Client if the Client is the federal government.

The Client or Denovo may request Changes by initiating the Change Order Process. To initiate the Change Order Process, the Party requesting the Change must fill out the Change Order Request form attached hereto and submit it to the appropriate project leader of the other Party. The Change Order Request must at a minimum describe the requested Change in sufficient detail for the Client and Denovo to make a reasonable assessment of the request.

The Client and Denovo will review the Change Order Request promptly and follow up with each other as necessary for further clarification or to discuss the impact that the Change will have on the Services, deliverables, implementation schedule, Service Availability Levels, terms and conditions, and Client fees. A

Change Order Request will not be effective nor will a Change be implemented unless the Change Order Request is executed by duly authorized representatives from both the Client and Denovo.

Upon mutual acceptance of the Change Order Request, it becomes part of the entire agreement between Denovo and the Client with respect to the subject matter hereof. Denovo will provide a copy of all mutually accepted Change Order Requests to the Client for future reference.

Each Party will be responsible for all costs and expenses incurred by it in participation of the Change Control Process unless otherwise agreed in writing. The failure of either Party to insist upon strict performance of the Change Order Request process for every Change shall not constitute a waiver of its rights as set forth in the Agreement, at law or equity.

[SIGNATURE PAGE TO FOLLOW]

Denovo

IN WITNESS WHEREOF, Denovo and the Client have executed this Statement of Work as of the date set forth above.

DENOVO VENTURES, LLC

By: _____

Name: _____

Title: _____

Date: _____

[CLIENT]

By: _____

Name: _____

Title: _____

Date: _____

CITY OF SANTA FE

Date: **October 23, 2024**

To: **Governing Body**

Regina Wheeler
Regina Wheeler (Oct 29, 2024 14:06 MDT)

Via: **Regina Wheeler, Public Works Department Director**
Melissa A. McDonald, Parks and Open Space Division Director MM
Sean Moody, Capital Projects Manager SM

From: **Scott A. Overlie, Parks and Open Space Project Manager** sao

---

ACTION:
Request for Approval of a New Mexico Department of Finance and Administration (DFA) General Fund 93100 Capital Appropriation Project Grant 24-I3147 in the Amount of $240,000 to Replace the Santa Fe River Pedestrian Bridge at Shelby Street with a Reversion Date of June 30, 2028. (Scott A. Overlie, Parks and Open Space Project Administrator; saoverlie@santafenm.gov)

1. Request for Approval of a Budget Adjustment Resolution (BAR) to Allocate the DFA Funding in the Amount of $240,000 into FY25 Revenue and Parks and Trails CIP WIP Construction.

BACKGROUND AND SUMMARY:
The existing pedestrian bridge across the Santa Fe River at Shelby Street has been determined by a structural engineer to be unsafe. Staff have installed temporary fencing and signage to prevent access to the bridge. Due to the degradation of the concrete foundations and the condition of the bridge, repairs are not possible. This grant will be used to begin design of a replacement bridge options including a prefabricated bridge. Final design will be required to meet historic design review requirements. Design is estimated to cost $265,000 and is expected to complete in 2025. Demolition and construction phases will begin after design is approved, costs are fully determined, and additional funding is secured.

FUNDING SOURCE: New Mexico Department of Finance and Administration
Fund Name/Number: Parks/Trails CIP/355
Munis Org Name/Number: Parks/Trails CIP/3559980
Munis Expenditure Object Name/Number: WIP Construction/572970
Munis Revenue Object Name/Number: DFA / 490210
Project Ledger Number: PWD2535518

If the project is grant funded? List grant award number: 24-I3147

Grant Manager / Accounting Officer Approval: Matthew Bonifer Matthew Bonifer (Oct 29, 2024 16:42 MDT) **Date:** Oct 29, 2024
Comment/Exceptions: _____

Budget Officer Approval: Andy Hopkins **Date:** Oct 29, 2024
Comment/Exceptions: _____

CAPITAL ASSET (will this procurement result in a tangible item that costs more than $5,000?):

☒ Yes | ☐ No

Repair or Replacement of Existing Equipment:

☐ Yes | ☒ No

Capital Project:
(New and improvement projects that are going to cost $10,000 or more)
☒ Yes | ☐ No

Anticipated length of project: Phase I Design through 2025

Asset Manager Approval: _____ **Date:** _____
Comment/Exceptions: _____

Department Approvals:
IT Components: ☐ **Yes** | ☒ **No**
Vehicles: ☐ **Yes** | ☒ **No**
Facilities, Furniture, Fixtures, Equipment: ☐ **Yes** | ☒ **No**

Approval: _____ **Title:** _____ **Date:** _____

Approval: _____ **Title:** _____ **Date:** _____

Comment & Exceptions: _____

Department Contract Administrator Contact Info:
Scott A. Overlie, Project Manager, Phone (505) 231-6194
Email Address: saoverlie@santafenm.gov

ATTACHMENTS:
Grant Agreement
BAR
Project Ledger Form

STATE OF NEW MEXICO
DEPARTMENT OF FINANCE AND ADMINISTRATION
GENERAL FUND 93100 CAPITAL APPROPRIATION PROJECT

THIS AGREEMENT is made and entered into as of the date it is executed, by and between the Department of Finance and Administration, hereinafter called the "Department" or abbreviation such as "DFA/LGD", and **CITY OF SANTA FE**, hereinafter called the "Grantee". This Agreement shall be effective as of the date it is executed by the Department.

RECITALS

WHEREAS, in the **Laws of 2024, Chapter 66, Section 28, Paragraph 505**, the Legislature made an appropriation to the Department, funds from which the Department is making available to the Grantee pursuant to this Agreement; and

WHEREAS, the Department is granting to Grantee, and the Grantee is accepting the grant of, funds from this appropriation, in accordance with the terms and conditions of this Agreement; and

WHEREAS, pursuant to Sections 9-6-5 and 9-6-5.1 NMSA 1978, the Secretary of the Department of Finance and Administration has the power and the authority to (i) maintain long-range estimates and plans for capital projects and develop standards for measuring the need for, and utility of, proposed projects; (ii) contract for, receive and utilize any grants or other financial assistance made available by the United States government or by any other source, public or private; (iii) provide planning and funding assistance to units of local government, council of government organizations, Indian tribal governments situated within New Mexico, and to nonprofit entities having for their purpose local, regional or community betterment; (iv) incident to any such programs, may enter into contracts and agreements with such units of local government, council of government organizations, Indian tribal governments, nonprofit entities and the federal government; and (v) delegate such authority to the Local Government Division as being necessary and appropriate to such delegation;

AGREEMENT

NOW, THEREFORE, in consideration of the mutual covenants and obligations contained herein, the parties hereby mutually agree as follows:

ARTICLE I. PROJECT DESCRIPTION, AMOUNT OF GRANT AND REVERSION DATE

A. The project that is the subject of this Agreement is described as follows:

24-I3147 $240,000.00 APPROPRIATION REVERSION DATE: June 30, 2028

Laws of 2024, Chapter 66, Section 28, Paragraph 505, Two Hundred Forty Thousand ($240,000.00), from the General Fund 93100 to plan, design, demolish and construct a pedestrian bridge across the Santa Fe river at Shelby street in Santa Fe in Santa Fe county;

The Grantee's total reimbursements shall not exceed Two Hundred Forty Thousand $240,000.00 (the "Appropriation Amount") minus the allocation for Art in Public Places ("AIPP amount")[1], if applicable, Zero $0.00, which equals Two Hundred Forty Thousand $240,000.00 (the "Adjusted Appropriation Amount").

In the event of a conflict among the Appropriation Amount, the Reversion Date, as defined herein and/or the purpose of the Project, as set forth in this Agreement, and the corresponding appropriation language in the laws cited above in this Article I(A), the language of the laws cited herein shall control.

This project is referred to throughout the remainder of this Agreement as the "Project"; the information contained in Article I(A) is referred to collectively throughout the remainder of this Agreement as the "Project Description." [Optional Language if special conditions apply. Attachment A sets forth additional or more stringent requirements and conditions, which are incorporated by this reference as if set forth fully herein. If Optional Attachment A imposes more stringent requirements than any requirement set forth in this Agreement, the more stringent requirements of Attachment A shall prevail, in the event of irreconcilable conflict.] The Grantee shall reference the Project's number in all correspondence with and submissions to the Department concerning the Project, including, but not limited to, Requests for Payment and reports.

ARTICLE II. LIMITATION ON DEPARTMENT'S OBLIGATION TO MAKE GRANT DISBURSEMENT TO GRANTEE

A. Upon the Effective Date of this Agreement, for permissible purposes within the scope of the Project Description, the Grantee shall only be reimbursed monies for which the Department has issued and the Grantee has received a Notice of Department's Obligation to Reimburse Grantee (hereinafter referred to as "Notice of Obligation"). This Grant Agreement and the disbursement of any and all amounts of the above referenced Adjusted Appropriation Amount are expressly conditioned upon the following:

i. Irrespective of any Notice of Obligation, the Grantee's expenditures shall be made on or before the Reversion Date and, if applicable, an Early Termination Date (i.e., the goods have been delivered and accepted or the title to the goods has been transferred to the Grantee and/or the services have been rendered for the Grantee); and

ii. The total amount received by the Grantee shall not exceed the lesser of: (a) the Adjusted Appropriation Amount identified in Article I(A) herein or (b) the total of all amounts stated in the Notice(s) of Obligation evidencing that the Department has received and accepted the Grantee's Third Party Obligation(s), as defined in subparagraph iii of this Article II(A); and

iii. The Grantee's expenditures were made pursuant to the State Procurement Code and execution of binding written obligations or purchase orders with third party contractors or vendors for the provision of services, including professional services, or the purchase of tangible personal property and real property for the Project, hereinafter referred to as "Third Party Obligations"; and

iv. The Grantee's submittal of timely Requests for Payment in accordance with the procedures set forth in Article IX of this Agreement; and

v. In the event that capital assets acquired with Project funds are to be sold, leased, or licensed to or operated by a private entity, the sale, lease, license, or operating agreement:

a. must be approved by the applicable oversight entity (if any) in accordance with law; or

b. if no oversight entity is required to approve the transaction, the Department must approve the transaction as complying with law.

Prior to the sale, lease, license, or operating agreement being approved pursuant to Articles II(A)(v)(a) and II(A)(v)(b) herein, the Department may, in its sole and absolute discretion and unless inconsistent with State Board of Finance imposed conditions, reimburse the Grantee for necessary expenditures incurred to develop the Project sufficiently to make the sale, lease, license, or operating agreement commercially feasible, such as plan and design expenditures; and

vi. The Grantee shall request approval of its obligation(s) by submitting a Notice of Obligation form as provided by the Department. The Grantee's submission of documentation of all Third Party Obligations and amendments thereto (including terminations) to the Department and the Department's issuance and the Grantee's receiving of a Notice of Obligation for a particular amount in accordance with the terms of this Agreement shall be governed by the following:

a. The Grantee shall submit to the Department one copy of all Third Party Obligations and amendments thereto (including terminations) as soon as possible after execution by the Third Party **but prior to execution by the Grantee.**

b. Grantee acknowledges and agrees that if it chooses to enter into a Third Party Obligation prior to receiving a Notice of Obligation that covers the expenditure, it is solely responsible for such obligations.

c. The Department may, in its sole and absolute discretion, issue to Grantee a Notice of Obligation for the particular amount of that Third Party Obligation that only obligates the Department to reimburse Grantee's expenditures made on or before the Reversion Date or an Early Termination Date.

d. The date the Department signs the Notice of Obligation is the date that the Department's Notice of Obligation is effective. After that date, the Grantee is authorized to budget the particular amount set forth in the Notice of Obligation, execute the Third Party Obligation and request the Third Party to begin work. Payment for any work performed or goods received prior to the effective date of the Notice of Obligation is wholly and solely the obligation of the Grantee.

B. The Grantee shall implement, in all respects, the Project. The Grantee shall provide all necessary qualified personnel, material, and facilities to implement the Project. The Grantee shall finance its share (if any) of the costs of the Project, including all Project overruns.

C. Project funds shall not be used for purposes other than those specified in the Project Description.

D. Unless specifically allowed by law, Project funds cannot be used to reimburse Grantee for indirect Project costs.

---

[1]The AIPP amount is "an amount of money equal to one percent or two hundred thousand dollars ($200,000), whichever is less, of the amount of money appropriated for new construction or any major renovation exceeding one hundred thousand dollars ($100,000)." Section 13-4A-4 NMSA 1978.

[2]"Reimburse" as used throughout this Agreement includes Department payments to the Grantee for invoices received, but not yet paid, by the Grantee from a third party contractor or vendor, if the invoices comply with the provisions of this Agreement and are a valid liability of the Grantee.

ARTICLE III. NOTICE PROVISIONS AND GRANTEE AND DEPARTMENT DESIGNATED REPRESENTATIVES

Whenever written notices, including written decisions, are to be given or received, related to this Agreement, the following provisions shall apply.

The Grantee designates the person(s) listed below, or their successor, as their official representative(s) concerning all matters related to this Agreement:

Grantee: CITY OF SANTA FE
Name: Alan Webber
Title: Mayor
Address: PO Box 909, Santa Fe, NM 87504
Email: mayor@santafenm.gov
Telephone: 505-955-6590

The Grantee designates the person(s) listed below, or their successor, as their Fiscal Officer or Fiscal Agent concerning all matters related to this Agreement:

Grantee: CITY OF SANTA FE
Name: Emily K. Oster
Title: Finance Director
Address: PO Box 909, Santa Fe, NM 87504
Email: ekoster@santafenm.gov
Telephone: 505-629-3411

The Department designates the persons listed below, or their successors, as the Points of Contact for matters related to this Agreement.

Department: DFA/Local Government Division
Name: Daniel Catanach
Title: Program Manager
Address: Bataan Memorial Bldg. Rm 202, Santa Fe, NM 87501
Email: danieln.catanach@dfa.nm.gov
Telephone: 505-231-6090

The Grantee and the Department agree that either party shall send all notices, including written decisions, related to this Agreement to the above named persons by email or regular mail. In the case of mailings, notices shall be deemed to have been given and received upon the date of the receiving party's actual receipt or five calendar days after mailing, whichever shall first occur. In the case of email transmissions, the notice shall be deemed to have been given and received on the date reflected on the delivery receipt of email.

ARTICLE IV. REVERSION DATE, TERM, DEADLINE TO EXPEND FUNDS

A. As referenced in Article I(A), the applicable law establishes a date by which Project funds must be expended by Grantee, which is referred to throughout the remainder of this Agreement as the "Reversion Date." Upon being duly executed by both parties, this Agreement shall be effective as of the date of execution by the Department. It shall terminate on **June 30, 2028** the Reversion Date unless Terminated Before Reversion Date ("Early Termination") pursuant to Article V herein.
B. The Project's funds must be expended on or before the Reversion Date and, if applicable, Early Termination Date of this Agreement. For purposes of this Agreement, it is not sufficient for the Grantee to encumber the Project funds on its books on or before the Project's Reversion Date or Early Termination Date. Funds are expended and an expenditure has occurred as of the date that a particular quantity of goods are delivered to and received by the Grantee or title to the goods is transferred to the Grantee and/or as of the date particular services are rendered for the Grantee. Funds are ***not*** expended and an expenditure has ***not*** occurred as of the date they are encumbered by the Grantee pursuant to a contract or purchase order with a third party.

ARTICLE V. EARLY TERMINATION

A. Early Termination Before Reversion Date Due to Completion of the Project or Complete Expenditure of the Adjusted Appropriation or Violation of this Agreement

Early Termination includes:

i. Termination due to completion of the Project before the Reversion Date; or
ii. Termination due to complete expenditure of the Adjusted Appropriation Amount before the Reversion Date; or
iii. Termination for violation of the terms of this Agreement; or
iv. Termination for suspected mishandling of public funds, including but not limited to, fraud, waste, abuse, and conflicts of interest.

Either the Department or the Grantee may early terminate this Agreement prior to the Reversion Date by providing the other party with a minimum of fifteen (15) days' advance, written notice of early termination. Grantee hereby waives any rights to assert an impairment of contract claim against the Department or the State of New Mexico in the event of Early Termination of this Agreement by the Department pursuant to Article V(A).

B. Early Termination Before Reversion Date Due to Non-appropriation

The terms of this Agreement are expressly made contingent upon sufficient appropriations and authorization being made by the Legislature of New Mexico for the performance of this Agreement. Throughout this Agreement the term "non-appropriate" or "non-appropriation" includes the following actions by the New Mexico Legislature: deauthorization, reauthorization or revocation of a prior authorization. The Legislature may choose to non-appropriate the Appropriation referred to in Article I and, if that occurs, the Department shall early terminate this Agreement for non-appropriation by giving the Grantee written notice of such termination, and such termination shall be effective as of the effective date of the law making the non-appropriation. The Department's decision as to whether sufficient appropriations or authorizations are available shall be accepted by the Grantee and shall be final. Grantee hereby waives any rights to assert an impairment of contract claim against the Department or the State of New Mexico in the event of Early Termination of this Agreement by the Department pursuant to Article V(B).

C. Limitation on Department's Obligation to Make Grant Disbursements to Grantee in the Event of Early Termination

In the event of Early Termination of this Agreement by either party, the Department's sole and absolute obligation to reimburse the Grantee is expressly conditioned upon the limitations set forth Article II.

ARTICLE VI. SUSPENSION OF NEW OR FURTHER OBLIGATIONS

A. The Department may choose, in its sole and absolute discretion, to provide written notice to the Grantee to suspend entering into new and further obligations. Upon the receipt of such written notice by the Grantee:

i. The Grantee shall immediately suspend entering into new or further written obligations with third parties; and
ii. The Department will suspend the issuance of any new or further Notice of Obligation under this Agreement; and
iii. The Department may direct the Grantee to implement a corrective action plan in accordance with Article VI(D) herein.

B. In the event of Suspension of this Agreement, the Department's sole and absolute obligation to reimburse the Grantee is expressly conditioned upon the limitations set forth in Article II herein.

C. A suspension of new or further obligations under this Agreement shall remain in effect unless or until the date the Grantee receives written notice given by the Department informing the Grantee that the Suspension has been lifted or that the Agreement has been Early Terminated in accordance with Article V herein. If the Suspension is lifted, the Department will consider further requests for Notice of Obligation.

D. Corrective Action Plan in the Event of Suspension

In the event that the Department chooses, in its sole and absolute discretion to direct the Grantee to suspend entering into new or further written obligations with third parties pursuant to Article VI(A), the Department may, but is not obligated to, require the Grantee to develop and implement a written corrective action plan to remedy the grounds for the Suspension. Such corrective action plan must be approved by the Department and be signed by the Grantee. Failure to sign a corrective action plan or meet the terms and deadlines set forth in the signed corrective action plan, is hereby deemed a violation of the terms of this Agreement for purposes of Early Termination, Article V(A)(iii). The corrective action plan is in addition to, and not in lieu of, any other equitable or legal remedy, including but not limited to Early Termination.

ARTICLE VII. AMENDMENT

This Agreement shall not be altered, changed, or amended except by instrument in writing duly executed by both the parties hereto.

ARTICLE VIII. REPORTS

A. Database Reporting

The Grantee shall report quarterly Project activity by entering such Project information as the Department and the Department of Finance and Administration may require, such information entered directly into a database maintained by the Department of Finance and Administration. Additionally, the Grantee shall certify on the Request for Payment form that updates have been maintained and are current in the database. The Grantee hereby acknowledges that failure to perform and/or certify updates into the database will delay or potentially jeopardize the reimbursement of funds. The Department shall give Grantee a minimum of thirty (30) days' advance written notice of any changes to the information the Grantee is required to report.

Quarterly reports are due on the last day of each quarter. Quarter end reporting periods are September 30th, December 31st, March 31st, and June 30th.

B. Requests for Additional Information/Project Inspection

During the term of this Agreement and during the period of time during which the Grantee must maintain records pursuant to Article VIII, the Department may:

i. request such additional information regarding the Project as it deems necessary; and
ii. conduct, at reasonable times and upon reasonable notice, onsite inspections of the Project.

Grantee shall respond to such requests for additional information within a reasonable period of time, as established by the Department.

ARTICLE IX. REQUEST FOR PAYMENT PROCEDURES AND DEADLINES

A. The Grantee shall request payment by submitting a Request for Payment, in the form provided by the Department. Payment requests are subject to the following procedures:
   i. The Grantee must submit a Request for Payment; and
   ii. Each Request for Payment must contain proof of payment by the Grantee or liabilities incurred by the Grantee showing that the expenditures are valid or are liabilities incurred by the Grantee in the form of actual unpaid invoices received by the Grantee for services rendered by a third party or items of tangible personal property received by the Grantee for the implementation of the Project; provided, however, that the Grantee may be reimbursed for unpaid liabilities only if the Department, in its sole and absolute discretion, agrees to do so and in accordance with any special conditions imposed by the Department.
   iii. In cases where the Grantee is submitting a Request for Payment to the Department based upon invoices received, but not yet paid, by the Grantee from a third party contractor or vendor, if the invoices comply with the provisions of this Agreement and are a valid liability of the Grantee, the Grantee shall make payment to those contractors or vendors within five (5) business days from the date of receiving reimbursement from the Department or such shorter period of time as the Department may prescribe in writing. The Grantee is required to certify to the Department proof of payment to the third party contractor or vendor within ten (10) business days from the date of receiving reimbursement from the Department.

B. The Grantee must obligate 5% of the Adjusted Appropriation Amount within six months of execution of the grant agreement and must have expended no less than 85% of the Adjusted Appropriation Amount six months prior to the reversion date.

C. Deadlines

Requests for Payments shall be submitted by Grantee to the Department on the earlier of:
   i. Immediately as they are received by the Grantee but at a minimum thirty (30) days from when the expenditure was incurred or liability of the Grantee was approved as evidenced by an unpaid invoice received by the Grantee from a third party contractor or vendor; or
   ii. Twenty (20) days from date of Early Termination; or

iii. Twenty (20) days from the Reversion Date.

D. The Grantee's failure to abide by the requirements set forth in Article II and Article IX herein will result in the denial of its Request for Payment or will delay the processing of Requests for Payment. The Department has the right to reject a payment request for the Project unless and until it is satisfied that the expenditures in the Request for Payment are for permissible purposes within the meaning of the Project Description and that the expenditures and the Grantee are otherwise in compliance with this Agreement, including but not limited to, compliance with the reporting requirements and the requirements set forth in Article II herein to provide Third Party Obligations and the Deadlines set forth in Article IX herein. The Department's ability to reject any Request for Payment is in addition to, and not in lieu of, any other legal or equitable remedy available to the Department due to Grantee's violation of this Agreement.

ARTICLE X. PROJECT CONDITIONS AND RESTRICTIONS; REPRESENTATIONS AND WARRANTIES

A. The following general conditions and restrictions are applicable to the Project:

i. The Project's funds must be spent in accordance with all applicable state laws, regulations, policies, and guidelines, including, but not limited to, the State Procurement Code (or local procurement ordinance, where applicable).

ii. The Project must be implemented in accordance with the New Mexico Public Works Minimum Wage Act, Section 13-4-10 through 13-4-17 NMSA 1978, as applicable. Every contract or project in excess of sixty thousand dollars ($60,000) that the Grantee is a party to for construction, alteration, demolition or repair or any combination of these, including painting and decorating, of public buildings, public works or public roads and that requires or involves the employment of mechanics, laborers or both shall contain a provision stating the minimum wages and fringe benefits to be paid to various classes of laborers and mechanics, shall be based upon the wages and benefits that will be determined by the New Mexico Department of Workforce Solutions to be prevailing for the corresponding classes of laborers and mechanics employed on contract work of a similar nature in the locality. Further, every contract or project shall contain a stipulation that the contractor, subcontractor, employer or a person acting as a contractor shall pay all mechanics and laborers employed on the site of the project, unconditionally and not less often than once a week and without subsequent unlawful deduction or rebate on any account, the full amounts accrued at time of payment computed at wage rates and fringe benefit rates not less than those determined pursuant to Section 13-4-11 (B) NMSA 1978 to be the prevailing wage rates and prevailing fringe benefit rates issued for the project.

iii. The Project may only benefit private entities in accordance with applicable law, including, but not limited to, Article IX, Section 14 of the Constitution of the State of New Mexico, the "Anti-Donation Clause."

iv. The Grantee shall not for a period of 10 years from the date of this agreement convert any property acquired, built, renovated, repaired, designed or developed with the Project's funds to uses other than those specified in the Project Description without the Department's and the Board of Finance's express, advance, written approval, which may include a requirement to reimburse the State for the cost of the project, transfer proceeds from the disposition of property to the State, or otherwise provide consideration to the State.

v. The Grantee shall comply with all federal and state laws, rules and regulations pertaining to equal employment opportunity. In accordance with all such laws, rules and regulations the Grantee agrees to assure that no person shall, on the grounds of race, color, national origin, sex, sexual preference, age or handicap, be excluded from employment with Grantee, be excluded from participation in the Project, be denied benefits or otherwise be subject to discrimination under, any activity performed under this Agreement. If Grantee is found to be not in compliance with these requirements during the life of this Agreement, Grantee agrees to take appropriate steps to correct any deficiencies. The Grantee's failure to implement such appropriate steps within a reasonable time constitutes grounds for terminating this Agreement.

B. The Grantee hereby represents and warrants the following:

i. The Grantee has the legal authority to receive and expend the Project's funds.

ii. This Agreement has been duly authorized by the Grantee, the person executing this Agreement has authority to do so, and, once executed by the Grantee, this Agreement shall constitute a binding obligation of the Grantee, enforceable according to its terms.

iii. This Agreement and the Grantee's obligations hereunder do not conflict with any law or ordinance or resolution applicable to the Grantee, the Grantee's charter (if applicable), or any judgment or decree to which the Grantee is subject.

iv. The Grantee has independently confirmed that the Project Description, including, but not limited to, the amount and Reversion Date, is consistent with the underlying appropriation in law.

v. The Grantee's governing body has duly adopted or passed as an official act a resolution, motion, or similar action authorizing the person identified as the official representative of the Grantee to sign the Agreement and to sign Requests for Payment.

vi. The Grantee shall abide by New Mexico laws regarding conflicts of interest, governmental conduct and whistleblower

protection. The Grantee specifically agrees that no officer or employee of the local jurisdiction or its designees or agents, no member of the governing body, and no other public official of the locality who exercises any function or responsibility with respect to this Grant, during their tenure or for one year thereafter, shall have any interest, direct or indirect, in any contract or subcontract, or the proceeds thereof, for work to be performed or goods to be received, pursuant to this Grant. Further, Grantee shall require all of its contractors to incorporate in all subcontracts the language set forth in this paragraph prohibiting conflicts of interest.

vii. No funds have been paid or will be paid, by or on behalf of the Grantee, to any person for influencing or attempting to influence an officer or employee of this or any agency or body in connection with the awarding of any Third Party Obligation and that the Grantee shall require certifying language prohibiting lobbying to be included in the award documents for all subawards, including subcontracts, loans and cooperative agreements. All subrecipients shall be required to certify accordingly.

ARTICLE XI. STRICT ACCOUNTABILITY OF RECEIPTS AND DISBURSEMENTS; PROJECT RECORDS

A. The Grantee shall be strictly accountable for receipts and disbursements relating to the Project's funds. The Grantee shall follow generally accepted accounting principles, and, if feasible, maintain a separate bank account or fund with a separate organizational code, for the funds to assure separate budgeting and accounting of the funds.

B. For a period of six (6) years following the Project's completion, the Grantee shall maintain all Project related records, including, but not limited to, all financial records, requests for proposals, invitations to bid, selection and award criteria, contracts and subcontracts, advertisements, minutes of pertinent meetings, as well as records sufficient to fully account for the amount and disposition of the total funds from all sources budgeted for the Project, the purpose for which such funds were used, and such other records as the Department shall prescribe.

C. The Grantee shall make all Project records available to the Department, the Department of Finance and Administration, and the New Mexico State Auditor upon request. With respect to the funds that are the subject of this Agreement, if the State Auditor or the Department of Finance and Administration finds that any or all of these funds were improperly expended, the Grantee may be required to reimburse to the State of New Mexico, to the originating fund, any and all amounts found to be improperly expended.

ARTICLE XII. IMPROPERLY REIMBURSED FUNDS

If the Department determines that part or all of the Appropriation Amount was improperly reimbursed to Grantee, including but not limited to, Project funds reimbursed to Grantee based upon fraud, mismanagement, misrepresentation, misuse, violation of law by the Grantee, or violation of this Agreement, the Grantee shall return such funds to the Department for disposition in accordance with law.

ARTICLE XIII. LIABILITY

Neither party shall be responsible for liability incurred as a result of the other party's acts or omissions in connection with this Agreement. Any liability incurred in connection with this Agreement is subject to immunities and limitations of the New Mexico Tort Claims Act.

ARTICLE XIV. SCOPE OF AGREEMENT

This Agreement constitutes the entire and exclusive agreement between the Grantee and Department concerning the subject matter hereof. The Agreement supersedes any and all prior or contemporaneous agreements, understandings, discussions, communications, and representations, written or verbal.

ARTICLE XV. REQUIRED NON-APPROPRIATIONS CLAUSE IN CONTRACTS FUNDED IN WHOLE OR PART BY FUNDS MADE AVAILABLE UNDER THIS AGREEMENT

The Grantee acknowledges, warrants, and agrees that Grantee shall include a "non-appropriations" clause in all contracts between it and other parties that are (i) funded in whole or part by funds made available under this Agreement and (ii) entered into after the effective date of this Agreement that states:

"The terms of this Agreement are contingent upon sufficient appropriations and authorization being made by the Legislature of New Mexico for the performance of this Agreement. If sufficient appropriations and authorization are not made by the Legislature, the **CITY OF SANTA FE** may immediately terminate this Agreement by giving Contractor written notice of such termination. The **CITY OF SANTA FE**'s decision as to whether sufficient appropriations are available shall be accepted by the Contractor and shall be final. Contractor hereby waives any rights to assert an impairment of contract claim against the **CITY OF SANTA FE** or the

Department of Finance and Administration, Local Government Division (DFA/LGD) or the State of New Mexico in the event of immediate or Early Termination of this Agreement by the **CITY OF SANTA FE** or the Department"

ARTICLE XVI. REQUIRED TERMINATION CLAUSE IN CONTRACTS FUNDED IN WHOLE OR PART BY FUNDS MADE AVAILABLE UNDER THIS AGREEMENT

Grantee acknowledges, warrants, and agrees that Grantee shall include the following termination clause in all contracts that are (i) funded in whole or part by funds made available under this Agreement and (ii) entered into after the effective date of this Agreement:

"This contract is funded in whole or in part by funds made available under a DFA/LGD Grant Agreement. Should the DFA/LGD early terminate the grant agreement, the CITY OF SANTA FE may early terminate this contract by providing Contractor written notice of such termination. In the event of termination pursuant to this paragraph, the CITY OF SANTA FE only liability shall be to pay Contractor for acceptable goods delivered and services rendered before the termination date."

Grantee hereby waives any rights to assert an impairment of contract claim against the Department or the State of New Mexico in the event of Early Termination of this Agreement by the Department.

ARTICLE XVII. COMPLIANCE WITH UNIFORM FUNDING CRITERIA.

A. Throughout the term of this Agreement, Grantee shall:
    1. submit all reports of annual audits and agreed upon procedures required by Section 12-6-3(A)-(B) NMSA 1978 by the due dates established in 2.2.2 NMAC, reports of which must be a public record pursuant to Section 12-6-5(A) NMSA 1978 within forty-five days of delivery to the State Auditor;
    2. have a duly adopted budget for the current fiscal year approved by its budgetary oversight agency (if any);
    3. timely submit all required financial reports to its budgetary oversight agency (if any); and
    4. have adequate accounting methods and procedures to expend grant funds in accordance with applicable law and account for and safeguard grant funds and assets acquired by grant funds.

B. In the event Grantee fails to comply with the requirements of Paragraph A of this Article XVII, the Department may take one or more of the following actions:
    1. suspend new or further obligations pursuant to Article VI(A) of this Agreement;
    2. require the Grantee to develop and implement a written corrective action plan pursuant to Article VI(D) of this Agreement to remedy the non-compliance;
    3. impose special grant conditions to address the non-compliance by giving the Grantee notice of such special conditions in accordance with Article III of this Agreement; the special conditions shall be binding and effective on the date that notice is deemed to have been given pursuant to Article III; or
    4. terminate this Agreement pursuant to Article V(A) of this Agreement.

ARTICLE XVIII. SEVERANCE TAX BOND AND GENERAL OBLIGATION BOND PROJECT CLAUSES

A. Grantee acknowledges and agrees that the underlying appropriation for the Project is a severance tax bond or general obligation bond appropriation, and that the associated bond proceeds are administered by the New Mexico State Board of Finance (SBOF), an entity separate and distinct from the Department. Grantee acknowledges and agrees that (i) it is Grantee's sole and absolute responsibility to determine through SBOF staff what (if any) conditions are currently imposed on the Project; (ii) the Department's failure to inform Grantee of a SBOF imposed condition does not affect the validity or enforceability of the condition; (iii) the SBOF may in the future impose further or different conditions upon the Project; (iv) all SBOF conditions are effective without amendment of this Agreement; (v) all applicable SBOF conditions must be satisfied before the SBOF will release to the Department funds subject to the condition(s); and (vi) the Department's obligation to reimburse Grantee from the Project is contingent upon the then current SBOF conditions being satisfied.

B. Grantee acknowledges and agrees that the SBOF may in its sole and absolute discretion remove a project's assigned bond proceeds if the project doesn't proceed sufficiently. Entities must comply with the requirement to encumber five percent (5%) of Project funds within six months of bond issuance as certified by the grantee in the Bond Questionnaire and Certification documents submitted to the SBOF. Failure to comply may result in the bond proceeds reassignment to a new ready project. If this should occur this grant agreement will be suspended until the entity has demonstrated readiness as determined by the SBOF and the Department.

C. Grantee acknowledges and agrees that this Agreement is subject to the SBOF's Bond Project Disbursements rule, NMAC 2.61.6, as may be amended or re-codified. The rule provides definitions and interpretations of grant language for the purpose of determining whether a particular activity is allowable under the authorizing language of the agreement.

[THIS SPACE LEFT BLANK INTENTIONALLY]

IN WITNESS WHEREOF, the parties have duly executed this Agreement as of the date of execution by the Department.

GRANTEE

_____
Entity Name

_____
Signature of Official with Authority to Bind Grantee

By: _____
(Print Name)

Its: _____
(Title)

_____
Date

DEPARTMENT OF FINANCE AND ADMINISTRATION
LOCAL GOVERNMENT DIVISION

_____
By:

Its: Cabinet Secretary or Designee

_____
Date

IN WITNESS WHEREOF, the parties have executed this Capital Appropriation Project as of the dates set forth below.

CITY OF SANTA FE:

SEE ABOVE

_____

ALAN WEBBER, MAYOR

ATTEST:

_____

GERALYN CARDENAS, INTERIM CITY CLERK

CITY ATTORNEY'S OFFICE:

Kevin L. Nault

Kevin L. Nault (Aug 9, 2024 15:47 MDT)

ASSISTANT CITY ATTORNEY

FINANCE DIRECTOR:

Emily K. Oster

EMILY OSTER

STATE OF NEW MEXICO
GRANT PROJECT
Request for Payment Form
Exhibit 1

I. Grantee Information

(Make sure information is complete & accurate)

A. Grantee: _____

B. Address: _____

(Complete Mailing, including Suite, if applicable)

_____

City, State, Zip

C. Contact Name/Phone #: _____

D. Grant No: _____

E. Project Title: _____

F. Grant Expiration Date: _____

II. Payment Computation

A. Payment Request No. _____

B. Grant Amount: _____

C. AIPP Amount *(If Applicable)* : _____

D. Funds Requested to Date: _____

E. Amount Requested this Payment: _____

F. Reversion Amount (I*f Applicable*): _____

G. Grant Balance: _____

H. Final Request for Payment (*if Applicable*)

III. Fiscal Year : _____

(The State of NM Fiscal Year is July 1, 20XX through June 30, 20XX of the following year)

IV. ☐ Reporting Certification:

I hereby certify to the best of my knowledge and belief, that reporting is up to date; to include the accuracy of expenditures and grant balance, project status, project phase, achievements and milestones; and in compliance with the Grant Agreement.

V. ☐ Compliance Certification:

Under penalty of law, I hereby certify to the best of my knowledge and belief, the above information is correct; expenditures are properly documented, and are valid expenditures or actual receipts; and that the grant activity is in full compliance with Article IX, Sec. 14 of the New Mexico Constitution known as the "anti donation" clause.

Grantee Fiscal Officer
or **Fiscal Agent** (*if applicable*)

Grantee Representative

Printed Name

Printed Name

Date: _____

Date: _____

(State Agency Use Only)

Vendor Code: _____ **Fund No.:** _____ **PO #** _____ **Loc No.:** _____

I certify that the State Agency financial and vendor file information agree with the above submitted information.

Division Fiscal Officer Date

Division Project Manager Date

NOTICE OF OBLIGATION TO REIMBURSE GRANTEE
EXHIBIT 2

Notice of Obligation to Reimburse Grantee # _____

DATE: _____

TO: Department Representative: _____, _____

FROM: Grantee Entity: _____

Grantee Official Representative: _____

SUBJECT: Notice of Obligation to Reimburse Grantee

Grant Number: _____

Grant Termination Date: _____

As the designated representative of the Department for Grant Agreement number _____ entered into between Grantee and the Department, I certify that the Grantee has submitted to the Department the following third party obligation executed, in writing, by the third party's authorized representative:

Vendor or Contractor: _____

Third Party Obligation Amount: _____

Vendor or Contractor: _____

Third Party Obligation Amount: _____

I certify that the State is issuing this Notice of Obligation to Reimburse Grantee for permissible purposes within the scope of the project description, subject to all the terms and conditions of the above referenced Grant Agreement.

Grant Amount (Minus AIPP if applicable): _____

The Amount of this Notice of Obligation: _____

The Total Amount of all Previously Issued Notices of Obligation: _____

The Total Amount of all Notices of Obligation to Date: _____

Note: Contract amounts may exceed the total grant amount, but the invoices paid by the grant will not exceed the grant amount.

Department Rep. Approver: _____

Title: _____

Signature: _____

Date: _____

1 Administrative and/or Indirect Cost – generally, the legislation authorizing the issuance of bonds prohibits the use of its proceeds for indirect expenses (e.g. penalty fees or damages other than pay for work performed, attorney fees, and administrative fees). Such use of bond proceeds shall not be allowed unless specifically authorized by statute.

Log # *{Finance use only}*:	
Journal # *{Finance use only}*:	

City of Santa Fe, New Mexico
BUDGET AMENDMENT RESOLUTION (BAR)

DEPARTMENT / DIVISION NAME	DATE
Public Works / Parks and Trails CIP	8/15/2024

ITEM DESCRIPTION	ORG	OBJECT	PROJECT	INCREASE	DECREASE
EXPENDITURES				*{enter as positive #}*	*{enter as negative #}*
WIP Construction - Ped Bridge SF River/Shelby St.	3559980	572970	PWD2535518	240,000	
REVENUES				*{enter as negative #}*	*{enter as positive #}*
DFA - 24-I3147 Ped Bridge SF River/Shelby St.	3559980	490210	PWD2535518	(240,000)	
				$ -	$ -

JUSTIFICATION: *(use additional page if needed)*
--Attach supporting documentation/memo

Agreement with NM DFA to plan, design, demolisth, and construct a pedestrian bridge across the Santa Fe River at Shelby Street in the amount of $240,000 (24-I3147 expires 06/30/28)

{Complete section below if BAR results in a net change to ANY Fund}

Fund(s) Affected	Fund Balance Increase/(Decrease)
TOTAL:	0

Halona Crowe	8/15/2024	*{Use this form for Finance Committee/ City Council agenda items ONLY}*	Andy Hopkins	Oct 30, 2024
Prepared By *{print name}*	Date	**CITY COUNCIL APPROVAL**	Budget Officer	Date
Melissa McDonald	Oct 23, 2024	*City Council Approval Date*		
Division Director Signature	Date		Finance Director *{≤ $5,000}*	Date
Regina Wheeler (Oct 29, 2024 14:06 MDT)	Oct 29, 2024	*Agenda Item #:*		
Department Director Signature	Date		City Manager *{≤ $60,000}*	Date

City of Santa Fe New Mexico

Finance Department

Project Ledger Request Form

Date of Request: 08/15/2024

Project Title: Pedestrian Bridge at SF River & Shelby St

Project Type: ☑ CIP ☑ Grant ☐ Internal Tracking

Project ID: PWD2535518
Grant ID: S2521
Approved By: MB 08/21/2024
Entered By: SS 08.20 (Finance Use Only)

Department: Public Works Project Manager: Scott Overlie Ext: 505-629-6194

Project Date Range: 08/15/2024 to 06/30/28 ☑ Create Fixed Asset

---

☐ Multi-Funding (complete all funding sources, should equal 100%)

Funding Source: NM DFA 24-I3147 % of Funding: 100%

MUNIS ORG: 3559980 MUNIS OBJ: 490210 Awarded Amount: $240,000

Funding Source: _____ % of Funding: _____

MUNIS ORG: _____ MUNIS OBJ: _____ Awarded Amount: _____

Expense String Phase:

A project must have at least one phase identified, this can be used as an additional level of tracking, for example, CIP - Design, Construction, etc. For Grants can be used as reimbursable types, such as transportation, salaries.

(You can create more than one phase and you can default MUNIS ORGs and OBJs, optional)

Phase: Construction MUNIS ORG: 3559980 MUNIS OBJ: 572970

Phase: _____ MUNIS ORG: _____ MUNIS OBJ: _____

Phase: _____ MUNIS ORG: _____ MUNIS OBJ: _____

Contract number: _____ Comments/Other: _____

GRANTS ONLY:

Grantor Name: DFA 24-I3147 Awarded Amount: $240,000.00

AR Charge Code: 3559980.490210 ☐ Grant funds multiple projects (Complete a form for each project)

Grantor Id: 700007 Federal CFDA (if applicable): _____

(If grants please provide all grant award documents with form) ☑ Attached Grant Documentation

Signature: Scott A.Overlie

Email: saoverlie@ci.santa-fe.nm.us

Signature:

Email: sxmoody@santafenm.gov

Signature: Scott Overlie
Scott Overlie (Oct 23, 2024 11:26 MDT)

Email: saoverlie@santafenm.gov

Signature: Sean Moody

Email: sxmoody@santafenm.gov

CITY OF SANTA FE

Date: **October 25, 2024**

To: **Governing Body**

Regina Wheeler (Oct 29, 2024 16:15 MDT)

Via: **Regina Wheeler, Public Works Department Director**
Melissa A. McDonald, Parks and Open Space Division Director MM
Sean Moody, Capital Projects Manager SM

From: **Scott A. Overlie, Parks and Open Space Project Manager** SAO

ACTION:

Request Approval of a New Mexico Department of Finance and Administration (DFA) General Fund 93100 Capital Appropriation Project Grant 24-I3142 in the Amount of $5,000,000 for Improvements at Fort Marcy Park with a Reversion Date of June 30, 2028. (Scott A. Overlie, Parks and Open Space Project Administrator; saoverlie@santafenm.gov)

1. Request Approval of a Budget Amendment Resolution to Allocate the DFA Funding in the Amount of $5,000,000 into FY25 Parks and Trails CIP Revenue and WIP Construction.

BACKGROUND AND SUMMARY:

This project was identified as a priority by Governor Lujan Grisham and included as a 2024 Legislative Capital Outlay appropriation (SB 275) to plan, design, construct, repair and equip Fort Marcy Park including accessibility improvements, walking and driving paths, restrooms, a concession stand, and grandstands. The improvements are necessary due to aging facilities and infrastructure, increased public use, and major events including Zozobra, the Santa Fe Wine and Chile Festival, and Santa Fe Fuego baseball games.

The grant will be used for planning, design and initial construction focused on:

a. Safety and ADA improvements
    i. Ensure full ADA access on sidewalks and stairs
    ii. Electrical system improvements to address failures.
b. Zozobra Field at Ft. Marcy improvements
    i. Renovate, repair and replace as necessary concession stand, bathrooms, ADA improvements for walkways and access to grandstands, lighting, new removable fence
c. Access improvements at east side arroyo crossing between the two fields
d. Additional cover on main arroyo for pedestrian access and egress during events

Construction costs and schedule will be determined once design phase is complete. Future construction will be phased to accommodate additional funding as it is secured.

The Funding source is: NEW MEXICO DEPARTMENT OF FINANCE AND ADMINISTRATION
Fund Name/Number: Parks/Trails CIP / 355
Munis Org Name/Number: Parks/Trails CIP / 3559980
Munis Expenditure Object Name/Number: WIP Construction / 572970
Munis Revenue Object Name/Number: NM DFA / 490210
Project Ledger Number: PWD2535527
If the project is grant funded? **List grant award number:** 24-I3142

Grant Manager/ Accounting Officer Approval: Matthew Bonifer Matthe wBonife Oct 29, 2024 16:44 MDT) **Date:** Oct 29, 2024

Comment/Exceptions: _____

Budget Officer Approval: Andy Hopkins **Date:** Oct 29, 2024

Comment/Exceptions: _____

CAPITAL ASSET (will this procurement result in a tangible item that costs more than $5,000?):
☑ Yes ☐ No

Repair or Replacement of Existing Equipment:
☑ Yes ☐ No
If yes -> ☑ Repair ☑ Replacement

Please explain: New, Repair or Replacement as Necessary

Capital Project (New and improvement projects that are going to cost $10,000 or more):
☑ **Yes** ☐ **No**

Anticipated length of project: To be determined once design phase is complete.

Asset Manager Approval: _____

Comment/Exceptions: _____

Department Approvals:
IT Components: ☐ Yes ☑ No
Vehicles: ☐ Yes ☑ No
Facilities, Furniture, Fixtures, Equipment: ☐ Yes ☑ No

Approval: _____ **Title:** _____ **Date:** _____

Approval: _____ **Title:** _____ **Date:** _____

Comment & Exceptions: _____

Department Contract Administrator Contact Info:
Scott A. Overlie, Project Administrator, Phone: (505) 231-6194 Email
Address: saoverlie@santafenm.gov

ATTACHMENTS:
Grant Agreement
Budget Amendment Resolution
Project Ledger ID Request

STATE OF NEW MEXICO
DEPARTMENT OF FINANCE AND ADMINISTRATION
GENERAL FUND 93100 CAPITAL APPROPRIATION PROJECT

THIS AGREEMENT is made and entered into as of the date it is executed, by and between the Department of Finance and Administration, hereinafter called the "Department" or abbreviation such as "DFA/LGD", and **CITY OF SANTA FE**, hereinafter called the "Grantee". This Agreement shall be effective as of the date it is executed by the Department.

RECITALS

WHEREAS, in the **Laws of 2024, Chapter 66, Section 28, Paragraph 500**, the Legislature made an appropriation to the Department, funds from which the Department is making available to the Grantee pursuant to this Agreement; and

WHEREAS, the Department is granting to Grantee, and the Grantee is accepting the grant of, funds from this appropriation, in accordance with the terms and conditions of this Agreement; and

WHEREAS, pursuant to Sections 9-6-5 and 9-6-5.1 NMSA 1978, the Secretary of the Department of Finance and Administration has the power and the authority to (i) maintain long-range estimates and plans for capital projects and develop standards for measuring the need for, and utility of, proposed projects; (ii) contract for, receive and utilize any grants or other financial assistance made available by the United States government or by any other source, public or private; (iii) provide planning and funding assistance to units of local government, council of government organizations, Indian tribal governments situated within New Mexico, and to nonprofit entities having for their purpose local, regional or community betterment; (iv) incident to any such programs, may enter into contracts and agreements with such units of local government, council of government organizations, Indian tribal governments, nonprofit entities and the federal government; and (v) delegate such authority to the Local Government Division as being necessary and appropriate to such delegation;

AGREEMENT

NOW, THEREFORE, in consideration of the mutual covenants and obligations contained herein, the parties hereby mutually agree as follows:

ARTICLE I. PROJECT DESCRIPTION, AMOUNT OF GRANT AND REVERSION DATE

A. The project that is the subject of this Agreement is described as follows:

24-I3142 $5,000,000.00 APPROPRIATION REVERSION DATE: June 30, 2028

Laws of 2024, Chapter 66, Section 28, Paragraph 500, Five Million Dollars And Zero Cents ($5,000,000.00), from the General Fund 93100 to plan, design, construct, repair, renovate and equip Fort Marcy park, including accessibility improvements, walking and driving paths, restrooms, a concession stand, grandstands, in Santa Fe in Santa Fe county;

The Grantee's total reimbursements shall not exceed Five Million Dollars And Zero Cents $5,000,000.00 (the "Appropriation Amount") minus the allocation for Art in Public Places ("AIPP amount")[1], if applicable, Fifty Thousand Dollars And Zero Cents $50,000.00, which equals Four Million Nine Hundred Fifty Thousand Dollars And Zero Cents $4,950,000.00 (the "Adjusted Appropriation Amount").

In the event of a conflict among the Appropriation Amount, the Reversion Date, as defined herein and/or the purpose of the Project, as set forth in this Agreement, and the corresponding appropriation language in the laws cited above in this Article I(A), the language of the laws cited herein shall control.

This project is referred to throughout the remainder of this Agreement as the "Project"; the information contained in Article I(A) is referred to collectively throughout the remainder of this Agreement as the "Project Description." [Optional Language if special conditions apply. Attachment A sets forth additional or more stringent requirements and conditions, which are incorporated by this reference as if set forth fully herein. If Optional Attachment A imposes more stringent requirements than any requirement set forth in this Agreement, the more stringent requirements of Attachment A shall prevail, in the event of irreconcilable conflict.] The Grantee shall reference the Project's number in all correspondence with and submissions to the Department concerning the Project, including, but not limited to, Requests for Payment and reports.

ARTICLE II. LIMITATION ON DEPARTMENT'S OBLIGATION TO MAKE GRANT DISBURSEMENT TO GRANTEE

A. Upon the Effective Date of this Agreement, for permissible purposes within the scope of the Project Description, the Grantee shall only be reimbursed monies for which the Department has issued and the Grantee has received a Notice of Department's Obligation to Reimburse Grantee (hereinafter referred to as "Notice of Obligation"). This Grant Agreement and the disbursement of any and all amounts of the above referenced Adjusted Appropriation Amount are expressly conditioned upon the following:

i. Irrespective of any Notice of Obligation, the Grantee's expenditures shall be made on or before the Reversion Date and, if applicable, an Early Termination Date (i.e., the goods have been delivered and accepted or the title to the goods has been transferred to the Grantee and/or the services have been rendered for the Grantee); and

ii. The total amount received by the Grantee shall not exceed the lesser of: (a) the Adjusted Appropriation Amount identified in Article I(A) herein or (b) the total of all amounts stated in the Notice(s) of Obligation evidencing that the Department has received and accepted the Grantee's Third Party Obligation(s), as defined in subparagraph iii of this Article II(A); and

iii. The Grantee's expenditures were made pursuant to the State Procurement Code and execution of binding written obligations or purchase orders with third party contractors or vendors for the provision of services, including professional services, or the purchase of tangible personal property and real property for the Project, hereinafter referred to as "Third Party Obligations"; and

iv. The Grantee's submittal of timely Requests for Payment in accordance with the procedures set forth in Article IX of this Agreement; and

v. In the event that capital assets acquired with Project funds are to be sold, leased, or licensed to or operated by a private entity, the sale, lease, license, or operating agreement:

a. must be approved by the applicable oversight entity (if any) in accordance with law; or

b. if no oversight entity is required to approve the transaction, the Department must approve the transaction as complying with law.

Prior to the sale, lease, license, or operating agreement being approved pursuant to Articles II(A)(v)(a) and II(A)(v)(b) herein, the Department may, in its sole and absolute discretion and unless inconsistent with State Board of Finance imposed conditions, reimburse the Grantee for necessary expenditures incurred to develop the Project sufficiently to make the sale, lease, license, or operating agreement commercially feasible, such as plan and design expenditures; and

vi. The Grantee shall request approval of its obligation(s) by submitting a Notice of Obligation form as provided by the Department. The Grantee's submission of documentation of all Third Party Obligations and amendments thereto (including terminations) to the Department and the Department's issuance and the Grantee's receiving of a Notice of Obligation for a particular amount in accordance with the terms of this Agreement shall be governed by the following:

a. The Grantee shall submit to the Department one copy of all Third Party Obligations and amendments thereto (including terminations) as soon as possible after execution by the Third Party **but prior to execution by the Grantee.**

b. Grantee acknowledges and agrees that if it chooses to enter into a Third Party Obligation prior to receiving a Notice of Obligation that covers the expenditure, it is solely responsible for such obligations.

c. The Department may, in its sole and absolute discretion, issue to Grantee a Notice of Obligation for the particular amount of that Third Party Obligation that only obligates the Department to reimburse Grantee's expenditures made on or before the Reversion Date or an Early Termination Date.

d. The date the Department signs the Notice of Obligation is the date that the Department's Notice of Obligation is effective. After that date, the Grantee is authorized to budget the particular amount set forth in the Notice of Obligation, execute the Third Party Obligation and request the Third Party to begin work. Payment for any work performed or goods received prior to the effective date of the Notice of Obligation is wholly and solely the obligation of the Grantee.

B. The Grantee shall implement, in all respects, the Project. The Grantee shall provide all necessary qualified personnel, material, and facilities to implement the Project. The Grantee shall finance its share (if any) of the costs of the Project, including all Project overruns.

C. Project funds shall not be used for purposes other than those specified in the Project Description.

D. Unless specifically allowed by law, Project funds cannot be used to reimburse Grantee for indirect Project costs.

---

[1]The AIPP amount is "an amount of money equal to one percent or two hundred thousand dollars ($200,000), whichever is less, of the amount of money appropriated for new construction or any major renovation exceeding one hundred thousand dollars ($100,000)." Section 13-4A-4 NMSA 1978.

[2]"Reimburse" as used throughout this Agreement includes Department payments to the Grantee for invoices received, but not yet paid, by the Grantee from a third party contractor or vendor, if the invoices comply with the provisions of this Agreement and are a valid liability of the Grantee.

ARTICLE III. NOTICE PROVISIONS AND GRANTEE AND DEPARTMENT DESIGNATED REPRESENTATIVES

Whenever written notices, including written decisions, are to be given or received, related to this Agreement, the following provisions shall apply.

The Grantee designates the person(s) listed below, or their successor, as their official representative(s) concerning all matters related to this Agreement:

Grantee: CITY OF SANTA FE
Name: Alan Webber
Title: Mayor
Address: PO Box 909, Santa Fe, NM 87504
Email: mayor@santafenm.gov
Telephone: 505-955-6590

The Grantee designates the person(s) listed below, or their successor, as their Fiscal Officer or Fiscal Agent concerning all matters related to this Agreement:

Grantee: CITY OF SANTA FE
Name: Emily K. Oster
Title: Finance Director
Address: PO Box 909, Santa Fe, NM 87504
Email: ekoster@santafenm.gov
Telephone: 505-629-3411

The Department designates the persons listed below, or their successors, as the Points of Contact for matters related to this Agreement.

Department: DFA/Local Government Division
Name: Daniel Catanach
Title: Program Manager
Address: Bataan Memorial Bldg. Rm 202, Santa Fe, NM 87501
Email: danieln.catanach@dfa.nm.gov
Telephone: 505-231-6090

The Grantee and the Department agree that either party shall send all notices, including written decisions, related to this Agreement to the above named persons by email or regular mail. In the case of mailings, notices shall be deemed to have been given and received upon the date of the receiving party's actual receipt or five calendar days after mailing, whichever shall first occur. In the case of email transmissions, the notice shall be deemed to have been given and received on the date reflected on the delivery receipt of email.

ARTICLE IV. REVERSION DATE, TERM, DEADLINE TO EXPEND FUNDS

A. As referenced in Article I(A), the applicable law establishes a date by which Project funds must be expended by Grantee, which is referred to throughout the remainder of this Agreement as the "Reversion Date." Upon being duly executed by both parties, this Agreement shall be effective as of the date of execution by the Department. It shall terminate on **June 30, 2028** the Reversion Date unless Terminated Before Reversion Date ("Early Termination") pursuant to Article V herein.
B. The Project's funds must be expended on or before the Reversion Date and, if applicable, Early Termination Date of this Agreement. For purposes of this Agreement, it is not sufficient for the Grantee to encumber the Project funds on its books on or before the Project's Reversion Date or Early Termination Date. Funds are expended and an expenditure has occurred as of the date that a particular quantity of goods are delivered to and received by the Grantee or title to the goods is transferred to the Grantee and/or as of the date particular services are rendered for the Grantee. Funds are ***not*** expended and an expenditure has ***not*** occurred as of the date they are encumbered by the Grantee pursuant to a contract or purchase order with a third party.

ARTICLE V. EARLY TERMINATION

A. Early Termination Before Reversion Date Due to Completion of the Project or Complete Expenditure of the Adjusted Appropriation or Violation of this Agreement

Early Termination includes:

i. Termination due to completion of the Project before the Reversion Date; or
ii. Termination due to complete expenditure of the Adjusted Appropriation Amount before the Reversion Date; or
iii. Termination for violation of the terms of this Agreement; or
iv. Termination for suspected mishandling of public funds, including but not limited to, fraud, waste, abuse, and conflicts of interest.

Either the Department or the Grantee may early terminate this Agreement prior to the Reversion Date by providing the other party with a minimum of fifteen (15) days' advance, written notice of early termination. Grantee hereby waives any rights to assert an impairment of contract claim against the Department or the State of New Mexico in the event of Early Termination of this Agreement by the Department pursuant to Article V(A).

B. Early Termination Before Reversion Date Due to Non-appropriation

The terms of this Agreement are expressly made contingent upon sufficient appropriations and authorization being made by the Legislature of New Mexico for the performance of this Agreement. Throughout this Agreement the term "non-appropriate" or "non-appropriation" includes the following actions by the New Mexico Legislature: deauthorization, reauthorization or revocation of a prior authorization. The Legislature may choose to non-appropriate the Appropriation referred to in Article I and, if that occurs, the Department shall early terminate this Agreement for non-appropriation by giving the Grantee written notice of such termination, and such termination shall be effective as of the effective date of the law making the non-appropriation. The Department's decision as to whether sufficient appropriations or authorizations are available shall be accepted by the Grantee and shall be final. Grantee hereby waives any rights to assert an impairment of contract claim against the Department or the State of New Mexico in the event of Early Termination of this Agreement by the Department pursuant to Article V(B).

C. Limitation on Department's Obligation to Make Grant Disbursements to Grantee in the Event of Early Termination

In the event of Early Termination of this Agreement by either party, the Department's sole and absolute obligation to reimburse the Grantee is expressly conditioned upon the limitations set forth Article II.

ARTICLE VI. SUSPENSION OF NEW OR FURTHER OBLIGATIONS

A. The Department may choose, in its sole and absolute discretion, to provide written notice to the Grantee to suspend entering into new and further obligations. Upon the receipt of such written notice by the Grantee:

i. The Grantee shall immediately suspend entering into new or further written obligations with third parties; and
ii. The Department will suspend the issuance of any new or further Notice of Obligation under this Agreement; and
iii. The Department may direct the Grantee to implement a corrective action plan in accordance with Article VI(D) herein.

B. In the event of Suspension of this Agreement, the Department's sole and absolute obligation to reimburse the Grantee is expressly conditioned upon the limitations set forth in Article II herein.

C. A suspension of new or further obligations under this Agreement shall remain in effect unless or until the date the Grantee receives written notice given by the Department informing the Grantee that the Suspension has been lifted or that the Agreement has been Early Terminated in accordance with Article V herein. If the Suspension is lifted, the Department will consider further requests for Notice of Obligation.

D. Corrective Action Plan in the Event of Suspension

In the event that the Department chooses, in its sole and absolute discretion to direct the Grantee to suspend entering into new or further written obligations with third parties pursuant to Article VI(A), the Department may, but is not obligated to, require the Grantee to develop and implement a written corrective action plan to remedy the grounds for the Suspension. Such corrective action plan must be approved by the Department and be signed by the Grantee. Failure to sign a corrective action plan or meet the terms and deadlines set forth in the signed corrective action plan, is hereby deemed a violation of the terms of this Agreement for purposes of Early Termination, Article V(A)(iii). The corrective action plan is in addition to, and not in lieu of, any other equitable or legal remedy, including but not limited to Early Termination.

ARTICLE VII. AMENDMENT

This Agreement shall not be altered, changed, or amended except by instrument in writing duly executed by both the parties hereto.

ARTICLE VIII. REPORTS

A. Database Reporting

The Grantee shall report quarterly Project activity by entering such Project information as the Department and the Department of Finance and Administration may require, such information entered directly into a database maintained by the Department of Finance and Administration. Additionally, the Grantee shall certify on the Request for Payment form that updates have been maintained and are current in the database. The Grantee hereby acknowledges that failure to perform and/or certify updates into the database will delay or potentially jeopardize the reimbursement of funds. The Department shall give Grantee a minimum of thirty (30) days' advance written notice of any changes to the information the Grantee is required to report.

Quarterly reports are due on the last day of each quarter. Quarter end reporting periods are September 30th, December 31st, March 31st, and June 30th.

B. Requests for Additional Information/Project Inspection

During the term of this Agreement and during the period of time during which the Grantee must maintain records pursuant to Article VIII, the Department may:

i. request such additional information regarding the Project as it deems necessary; and
ii. conduct, at reasonable times and upon reasonable notice, onsite inspections of the Project.

Grantee shall respond to such requests for additional information within a reasonable period of time, as established by the Department.

ARTICLE IX. REQUEST FOR PAYMENT PROCEDURES AND DEADLINES

A. The Grantee shall request payment by submitting a Request for Payment, in the form provided by the Department. Payment requests are subject to the following procedures:
   i. The Grantee must submit a Request for Payment; and
   ii. Each Request for Payment must contain proof of payment by the Grantee or liabilities incurred by the Grantee showing that the expenditures are valid or are liabilities incurred by the Grantee in the form of actual unpaid invoices received by the Grantee for services rendered by a third party or items of tangible personal property received by the Grantee for the implementation of the Project; provided, however, that the Grantee may be reimbursed for unpaid liabilities only if the Department, in its sole and absolute discretion, agrees to do so and in accordance with any special conditions imposed by the Department.
   iii. In cases where the Grantee is submitting a Request for Payment to the Department based upon invoices received, but not yet paid, by the Grantee from a third party contractor or vendor, if the invoices comply with the provisions of this Agreement and are a valid liability of the Grantee, the Grantee shall make payment to those contractors or vendors within five (5) business days from the date of receiving reimbursement from the Department or such shorter period of time as the Department may prescribe in writing. The Grantee is required to certify to the Department proof of payment to the third party contractor or vendor within ten (10) business days from the date of receiving reimbursement from the Department.

B. The Grantee must obligate 5% of the Adjusted Appropriation Amount within six months of execution of the grant agreement and must have expended no less than 85% of the Adjusted Appropriation Amount six months prior to the reversion date.

C. Deadlines

Requests for Payments shall be submitted by Grantee to the Department on the earlier of:
   i. Immediately as they are received by the Grantee but at a minimum thirty (30) days from when the expenditure was incurred or liability of the Grantee was approved as evidenced by an unpaid invoice received by the Grantee from a third party contractor or vendor; or
   ii. Twenty (20) days from date of Early Termination; or

iii. Twenty (20) days from the Reversion Date.

D. The Grantee's failure to abide by the requirements set forth in Article II and Article IX herein will result in the denial of its Request for Payment or will delay the processing of Requests for Payment. The Department has the right to reject a payment request for the Project unless and until it is satisfied that the expenditures in the Request for Payment are for permissible purposes within the meaning of the Project Description and that the expenditures and the Grantee are otherwise in compliance with this Agreement, including but not limited to, compliance with the reporting requirements and the requirements set forth in Article II herein to provide Third Party Obligations and the Deadlines set forth in Article IX herein. The Department's ability to reject any Request for Payment is in addition to, and not in lieu of, any other legal or equitable remedy available to the Department due to Grantee's violation of this Agreement.

ARTICLE X. PROJECT CONDITIONS AND RESTRICTIONS; REPRESENTATIONS AND WARRANTIES

A. The following general conditions and restrictions are applicable to the Project:

i. The Project's funds must be spent in accordance with all applicable state laws, regulations, policies, and guidelines, including, but not limited to, the State Procurement Code (or local procurement ordinance, where applicable).

ii. The Project must be implemented in accordance with the New Mexico Public Works Minimum Wage Act, Section 13-4-10 through 13-4-17 NMSA 1978, as applicable. Every contract or project in excess of sixty thousand dollars ($60,000) that the Grantee is a party to for construction, alteration, demolition or repair or any combination of these, including painting and decorating, of public buildings, public works or public roads and that requires or involves the employment of mechanics, laborers or both shall contain a provision stating the minimum wages and fringe benefits to be paid to various classes of laborers and mechanics, shall be based upon the wages and benefits that will be determined by the New Mexico Department of Workforce Solutions to be prevailing for the corresponding classes of laborers and mechanics employed on contract work of a similar nature in the locality. Further, every contract or project shall contain a stipulation that the contractor, subcontractor, employer or a person acting as a contractor shall pay all mechanics and laborers employed on the site of the project, unconditionally and not less often than once a week and without subsequent unlawful deduction or rebate on any account, the full amounts accrued at time of payment computed at wage rates and fringe benefit rates not less than those determined pursuant to Section 13-4-11 (B) NMSA 1978 to be the prevailing wage rates and prevailing fringe benefit rates issued for the project.

iii. The Project may only benefit private entities in accordance with applicable law, including, but not limited to, Article IX, Section 14 of the Constitution of the State of New Mexico, the "Anti-Donation Clause."

iv. The Grantee shall not for a period of 10 years from the date of this agreement convert any property acquired, built, renovated, repaired, designed or developed with the Project's funds to uses other than those specified in the Project Description without the Department's and the Board of Finance's express, advance, written approval, which may include a requirement to reimburse the State for the cost of the project, transfer proceeds from the disposition of property to the State, or otherwise provide consideration to the State.

v. The Grantee shall comply with all federal and state laws, rules and regulations pertaining to equal employment opportunity. In accordance with all such laws, rules and regulations the Grantee agrees to assure that no person shall, on the grounds of race, color, national origin, sex, sexual preference, age or handicap, be excluded from employment with Grantee, be excluded from participation in the Project, be denied benefits or otherwise be subject to discrimination under, any activity performed under this Agreement. If Grantee is found to be not in compliance with these requirements during the life of this Agreement, Grantee agrees to take appropriate steps to correct any deficiencies. The Grantee's failure to implement such appropriate steps within a reasonable time constitutes grounds for terminating this Agreement.

B. The Grantee hereby represents and warrants the following:

i. The Grantee has the legal authority to receive and expend the Project's funds.

ii. This Agreement has been duly authorized by the Grantee, the person executing this Agreement has authority to do so, and, once executed by the Grantee, this Agreement shall constitute a binding obligation of the Grantee, enforceable according to its terms.

iii. This Agreement and the Grantee's obligations hereunder do not conflict with any law or ordinance or resolution applicable to the Grantee, the Grantee's charter (if applicable), or any judgment or decree to which the Grantee is subject.

iv. The Grantee has independently confirmed that the Project Description, including, but not limited to, the amount and Reversion Date, is consistent with the underlying appropriation in law.

v. The Grantee's governing body has duly adopted or passed as an official act a resolution, motion, or similar action authorizing the person identified as the official representative of the Grantee to sign the Agreement and to sign Requests for Payment.

vi. The Grantee shall abide by New Mexico laws regarding conflicts of interest, governmental conduct and whistleblower

protection. The Grantee specifically agrees that no officer or employee of the local jurisdiction or its designees or agents, no member of the governing body, and no other public official of the locality who exercises any function or responsibility with respect to this Grant, during their tenure or for one year thereafter, shall have any interest, direct or indirect, in any contract or subcontract, or the proceeds thereof, for work to be performed or goods to be received, pursuant to this Grant. Further, Grantee shall require all of its contractors to incorporate in all subcontracts the language set forth in this paragraph prohibiting conflicts of interest.

vii. No funds have been paid or will be paid, by or on behalf of the Grantee, to any person for influencing or attempting to influence an officer or employee of this or any agency or body in connection with the awarding of any Third Party Obligation and that the Grantee shall require certifying language prohibiting lobbying to be included in the award documents for all subawards, including subcontracts, loans and cooperative agreements. All subrecipients shall be required to certify accordingly.

ARTICLE XI. STRICT ACCOUNTABILITY OF RECEIPTS AND DISBURSEMENTS; PROJECT RECORDS

A. The Grantee shall be strictly accountable for receipts and disbursements relating to the Project's funds. The Grantee shall follow generally accepted accounting principles, and, if feasible, maintain a separate bank account or fund with a separate organizational code, for the funds to assure separate budgeting and accounting of the funds.

B. For a period of six (6) years following the Project's completion, the Grantee shall maintain all Project related records, including, but not limited to, all financial records, requests for proposals, invitations to bid, selection and award criteria, contracts and subcontracts, advertisements, minutes of pertinent meetings, as well as records sufficient to fully account for the amount and disposition of the total funds from all sources budgeted for the Project, the purpose for which such funds were used, and such other records as the Department shall prescribe.

C. The Grantee shall make all Project records available to the Department, the Department of Finance and Administration, and the New Mexico State Auditor upon request. With respect to the funds that are the subject of this Agreement, if the State Auditor or the Department of Finance and Administration finds that any or all of these funds were improperly expended, the Grantee may be required to reimburse to the State of New Mexico, to the originating fund, any and all amounts found to be improperly expended.

ARTICLE XII. IMPROPERLY REIMBURSED FUNDS

If the Department determines that part or all of the Appropriation Amount was improperly reimbursed to Grantee, including but not limited to, Project funds reimbursed to Grantee based upon fraud, mismanagement, misrepresentation, misuse, violation of law by the Grantee, or violation of this Agreement, the Grantee shall return such funds to the Department for disposition in accordance with law.

ARTICLE XIII. LIABILITY

Neither party shall be responsible for liability incurred as a result of the other party's acts or omissions in connection with this Agreement. Any liability incurred in connection with this Agreement is subject to immunities and limitations of the New Mexico Tort Claims Act.

ARTICLE XIV. SCOPE OF AGREEMENT

This Agreement constitutes the entire and exclusive agreement between the Grantee and Department concerning the subject matter hereof. The Agreement supersedes any and all prior or contemporaneous agreements, understandings, discussions, communications, and representations, written or verbal.

ARTICLE XV. REQUIRED NON-APPROPRIATIONS CLAUSE IN CONTRACTS FUNDED IN WHOLE OR PART BY FUNDS MADE AVAILABLE UNDER THIS AGREEMENT

The Grantee acknowledges, warrants, and agrees that Grantee shall include a "non-appropriations" clause in all contracts between it and other parties that are (i) funded in whole or part by funds made available under this Agreement and (ii) entered into after the effective date of this Agreement that states:

"The terms of this Agreement are contingent upon sufficient appropriations and authorization being made by the Legislature of New Mexico for the performance of this Agreement. If sufficient appropriations and authorization are not made by the Legislature, the **CITY OF SANTA FE** may immediately terminate this Agreement by giving Contractor written notice of such termination. The **CITY OF SANTA FE**'s decision as to whether sufficient appropriations are available shall be accepted by the Contractor and shall be final. Contractor hereby waives any rights to assert an impairment of contract claim against the **CITY OF SANTA FE** or the

Department of Finance and Administration, Local Government Division (DFA/LGD) or the State of New Mexico in the event of immediate or Early Termination of this Agreement by the **CITY OF SANTA FE** or the Department"

ARTICLE XVI. REQUIRED TERMINATION CLAUSE IN CONTRACTS FUNDED IN WHOLE OR PART BY FUNDS MADE AVAILABLE UNDER THIS AGREEMENT

Grantee acknowledges, warrants, and agrees that Grantee shall include the following termination clause in all contracts that are (i) funded in whole or part by funds made available under this Agreement and (ii) entered into after the effective date of this Agreement:

"This contract is funded in whole or in part by funds made available under a DFA/LGD Grant Agreement. Should the DFA/LGD early terminate the grant agreement, the CITY OF SANTA FE may early terminate this contract by providing Contractor written notice of such termination. In the event of termination pursuant to this paragraph, the CITY OF SANTA FE only liability shall be to pay Contractor for acceptable goods delivered and services rendered before the termination date."

Grantee hereby waives any rights to assert an impairment of contract claim against the Department or the State of New Mexico in the event of Early Termination of this Agreement by the Department.

ARTICLE XVII. COMPLIANCE WITH UNIFORM FUNDING CRITERIA.

A. Throughout the term of this Agreement, Grantee shall:
    1. submit all reports of annual audits and agreed upon procedures required by Section 12-6-3(A)-(B) NMSA 1978 by the due dates established in 2.2.2 NMAC, reports of which must be a public record pursuant to Section 12-6-5(A) NMSA 1978 within forty-five days of delivery to the State Auditor;
    2. have a duly adopted budget for the current fiscal year approved by its budgetary oversight agency (if any);
    3. timely submit all required financial reports to its budgetary oversight agency (if any); and
    4. have adequate accounting methods and procedures to expend grant funds in accordance with applicable law and account for and safeguard grant funds and assets acquired by grant funds.
B. In the event Grantee fails to comply with the requirements of Paragraph A of this Article XVII, the Department may take one or more of the following actions:
    1. suspend new or further obligations pursuant to Article VI(A) of this Agreement;
    2. require the Grantee to develop and implement a written corrective action plan pursuant to Article VI(D) of this Agreement to remedy the non-compliance;
    3. impose special grant conditions to address the non-compliance by giving the Grantee notice of such special conditions in accordance with Article III of this Agreement; the special conditions shall be binding and effective on the date that notice is deemed to have been given pursuant to Article III; or
    4. terminate this Agreement pursuant to Article V(A) of this Agreement.

ARTICLE XVIII. SEVERANCE TAX BOND AND GENERAL OBLIGATION BOND PROJECT CLAUSES

A. Grantee acknowledges and agrees that the underlying appropriation for the Project is a severance tax bond or general obligation bond appropriation, and that the associated bond proceeds are administered by the New Mexico State Board of Finance (SBOF), an entity separate and distinct from the Department. Grantee acknowledges and agrees that (i) it is Grantee's sole and absolute responsibility to determine through SBOF staff what (if any) conditions are currently imposed on the Project; (ii) the Department's failure to inform Grantee of a SBOF imposed condition does not affect the validity or enforceability of the condition; (iii) the SBOF may in the future impose further or different conditions upon the Project; (iv) all SBOF conditions are effective without amendment of this Agreement; (v) all applicable SBOF conditions must be satisfied before the SBOF will release to the Department funds subject to the condition(s); and (vi) the Department's obligation to reimburse Grantee from the Project is contingent upon the then current SBOF conditions being satisfied.

B. Grantee acknowledges and agrees that the SBOF may in its sole and absolute discretion remove a project's assigned bond proceeds if the project doesn't proceed sufficiently. Entities must comply with the requirement to encumber five percent (5%) of Project funds within six months of bond issuance as certified by the grantee in the Bond Questionnaire and Certification documents submitted to the SBOF. Failure to comply may result in the bond proceeds reassignment to a new ready project. If this should occur this grant agreement will be suspended until the entity has demonstrated readiness as determined by the SBOF and the Department.

C. Grantee acknowledges and agrees that this Agreement is subject to the SBOF's Bond Project Disbursements rule, NMAC 2.61.6, as may be amended or re-codified. The rule provides definitions and interpretations of grant language for the purpose of determining whether a particular activity is allowable under the authorizing language of the agreement.

[THIS SPACE LEFT BLANK INTENTIONALLY]

IN WITNESS WHEREOF, the parties have duly executed this Agreement as of the date of execution by the Department.

GRANTEE

_____
Entity Name

_____
Signature of Official with Authority to Bind Grantee

By: _____
(Print Name)

Its: _____
(Title)

_____
Date

DEPARTMENT OF FINANCE AND ADMINISTRATION
LOCAL GOVERNMENT DIVISION

_____
By:

Its: Cabinet Secretary or Designee

_____
Date

IN WITNESS WHEREOF, the parties have executed this Capital Appropriation Project as of the dates set forth below.

CITY OF SANTA FE:

SEE ABOVE

_____

ALAN WEBBER, MAYOR

ATTEST:

_____

GERALYN CARDENAS, INTERIM CITY CLERK

CITY ATTORNEY'S OFFICE:

Kevin L. Nault

Kevin L. Nault (Aug 9, 2024 15:36 MDT)

ASSISTANT CITY ATTORNEY

FINANCE DIRECTOR:

Emily K. Oster

_____

EMILY OSTER

STATE OF NEW MEXICO
GRANT PROJECT
Request for Payment Form
Exhibit 1

I. Grantee Information

(Make sure information is complete & accurate)

A. Grantee: _____

B. Address: _____

(Complete Mailing, including Suite, if applicable)

_____

City, State, Zip

C. Contact Name/Phone #: _____

D. Grant No: _____

E. Project Title: _____

F. Grant Expiration Date: _____

II. Payment Computation

A. Payment Request No. _____

B. Grant Amount: _____

C. AIPP Amount *(If Applicable)* : _____

D. Funds Requested to Date: _____

E. Amount Requested this Payment: _____

F. Reversion Amount (I*f Applicable*): _____

G. Grant Balance: _____

H. Final Request for Payment (*if Applicable*)

III. Fiscal Year : _____

(The State of NM Fiscal Year is July 1, 20XX through June 30, 20XX of the following year)

IV. ☐ Reporting Certification:

I hereby certify to the best of my knowledge and belief, that reporting is up to date; to include the accuracy of expenditures and grant balance, project status, project phase, achievements and milestones; and in compliance with the Grant Agreement.

V. ☐ Compliance Certification:

Under penalty of law, I hereby certify to the best of my knowledge and belief, the above information is correct; expenditures are properly documented, and are valid expenditures or actual receipts; and that the grant activity is in full compliance with Article IX, Sec. 14 of the New Mexico Constitution known as the "anti donation" clause.

Grantee Fiscal Officer
or **Fiscal Agent** (*if applicable*)

Printed Name

Date: _____

Grantee Representative

Printed Name

Date: _____

(State Agency Use Only)

Vendor Code: _____ **Fund No.:** _____ **PO #** _____ **Loc No.:** _____

I certify that the State Agency financial and vendor file information agree with the above submitted information.

Division Fiscal Officer Date

Division Project Manager Date

NOTICE OF OBLIGATION TO REIMBURSE GRANTEE
EXHIBIT 2

Notice of Obligation to Reimburse Grantee # _____

DATE: _____

TO: Department Representative: _____, _____

FROM: Grantee Entity: _____

Grantee Official Representative: _____

SUBJECT: Notice of Obligation to Reimburse Grantee

Grant Number: _____

Grant Termination Date: _____

As the designated representative of the Department for Grant Agreement number _____ entered into between Grantee and the Department, I certify that the Grantee has submitted to the Department the following third party obligation executed, in writing, by the third party's authorized representative:

Vendor or Contractor: _____

Third Party Obligation Amount: _____

Vendor or Contractor: _____

Third Party Obligation Amount: _____

I certify that the State is issuing this Notice of Obligation to Reimburse Grantee for permissible purposes within the scope of the project description, subject to all the terms and conditions of the above referenced Grant Agreement.

Grant Amount (Minus AIPP if applicable): _____

The Amount of this Notice of Obligation: _____

The Total Amount of all Previously Issued Notices of Obligation: _____

The Total Amount of all Notices of Obligation to Date: _____

Note: Contract amounts may exceed the total grant amount, but the invoices paid by the grant will not exceed the grant amount.

Department Rep. Approver: _____

Title: _____

Signature: _____

Date: _____

1 Administrative and/or Indirect Cost – generally, the legislation authorizing the issuance of bonds prohibits the use of its proceeds for indirect expenses (e.g. penalty fees or damages other than pay for work performed, attorney fees, and administrative fees). Such use of bond proceeds shall not be allowed unless specifically authorized by statute.

Log # *{Finance use only}*:	
Journal # *{Finance use only}*:	

City of Santa Fe, New Mexico
BUDGET AMENDMENT RESOLUTION (BAR)

DEPARTMENT / DIVISION NAME	DATE
Public Works / Parks/Trails CIP	8/15/2024

ITEM DESCRIPTION	ORG	OBJECT	PROJECT	INCREASE	DECREASE
EXPENDITURES				*{enter as positive #}*	*{enter as negative #}*
WIP Construction - Ft. Marcy Improvements	3559980	572970	PWD2535527	5,000,000	
REVENUES				*{enter as negative #}*	*{enter as positive #}*
DFA - 24-I3142 Ft. Marcy Improvements	3559980	490210	PWD2535527	(5,000,000)	
				$ -	$ -

JUSTIFICATION: *(use additional page if needed)*
--Attach supporting documentation/memo

Agreement with NM DFA to plan, design, and construct, repair, renovate and equip Ft. Marcy Park, including accessibility improvements, walking and driving paths, restrooms, a concession stand, and grandstands in the total amount of $5,000,000 (24-I3142 exp 06/30/28)

{Complete section below if BAR results in a net change to ANY Fund}

Fund(s) Affected	Fund Balance Increase/(Decrease)
TOTAL:	0

{Use this form for Finance Committee/ City Council agenda items ONLY}

CITY COUNCIL APPROVAL

City Council Approval Date

Agenda Item #:

Halona Crowe	8/15/2024	Andy Hopkins	Oct 30, 2024
Prepared By *{print name}*	Date	Budget Officer	Date
Melissa McDonald	Oct 29, 2024		
Division Director Signature	Date	Finance Director *{≤ $5,000}*	Date
Regina Wheeler (Oct 29, 2024 16:15 MDT)	Oct 29, 2024		
Department Director Signature	Date	City Manager *{≤ $60,000}*	Date

City of Santa Fe New Mexico

Finance Department

Project Ledger Request Form

Date of Request: 08/15/2024

Project Title: Ft Marcy Park Improvements

Project Type: ☑ CIP ☑ Grant ☐ Internal Tracking

Project ID: PWD2535527
Grant ID: S2525
Approved By: MB 08/21/24
Entered By: SS 08.20 (Finance Use Only)

Department: Public Works Project Manager: Scott Overlie Ext: 505-231-6194

Project Date Range: 08/15/2024 to 06/30/28 ☑ Create Fixed Asset

---

☐ Multi-Funding (complete all funding sources, should equal 100%)

Funding Source: DFA 24-I3142 % of Funding: 100%

MUNIS ORG: 3559980 MUNIS OBJ: 490210 Awarded Amount: $5,000,000

Funding Source: _____ % of Funding: _____

MUNIS ORG: _____ MUNIS OBJ: _____ Awarded Amount: _____

Expense String Phase:

A project must have at least one phase identified, this can be used as an additional level of tracking, for example, CIP - Design, Construction, etc. For Grants can be used as reimbursable types, such as transportation, salaries.

(You can create more than one phase and you can default MUNIS ORGs and OBJs, optional)

Phase: Construction MUNIS ORG: 3559980 MUNIS OBJ: 572970

Phase: _____ MUNIS ORG: _____ MUNIS OBJ: _____

Phase: _____ MUNIS ORG: _____ MUNIS OBJ: _____

Contract number: _____ Comments/Other: _____

GRANTS ONLY:

Grantor Name: DFA 24-I3142 Awarded Amount: $5,000,000

AR Charge Code: 3559980.490210 ☐ Grant funds multiple projects (Complete a form for each project)

Grantor Id: 700007 Federal CFDA (if applicable): _____

(If grants please provide all grant award documents with form) ☑ Attached Grant Documentation

Signature: Scott Overlie
Scott Overlie (Oct 29, 2024 15:01 MDT)

Email: saoverlie@santafenm.gov

Signature: Sean Moody

Email: sxmoody@santafenm.gov

CITY OF SANTA FE

Date: September 20, 2024

To: Mayor Alan Webber and Governing Body

Via: John Dupuis, Public Utilities Department Director
Mike Dozier, WWM Division Director MD

From: P. Fred Heerbrandt P.E., Engineer Supervisor, WWMD FH

Subject: Amendment #1 On-Call Repairs to the Collection System/CIP 962

Vendor Name: Sub Surface Contracting Inc.

Vendor Number: 1921

ITEM AND ISSUE:
Public Utilities Department/Wastewater Management Division respectfully requests your review and approval of Sub Surface General Service Contract Amendment #1 for On-Call repairs and construction to the collection system, allowing the Collections Section to respond quickly to sanitary sewer line plugs, collapses, replacement, and other similar maintenance. Request for the Approval to increase compensation by $1,500,000 to the total contract amount not to exceed $2,463,475.12. Contract ending June 30, 2025. (P. Fred Heerbrandt, P.E., pfheerbrandt@santafenm.gov, 505-955-4623)

*Original City Clerk Item Number 21-0660
*Date of Original Contract approval by Governing Body 10/18/21

Action Requested: Approval of Contract Amendment #1 and Approval of a BAR for $1,500,000 for from the WWMD Enterprise Fund.

BACKGROUND AND SUMMARY:
The contract is a 4-year contract with three contractors, which terminates on June 30, 2025. We are requesting increased compensation for Sub Surface Contractors, Inc. only. The required funding for repairs is already in place within the 2024 – 2025 fiscal budget.

PROCUREMENT METHOD:
ITB 21/46/B, Three bidders, Award to all three bidders.

Chief Procurement Officer Approval: _____ **Date:** 10/25/2024

Comment/Exceptions: _____

Supporting Information:

CONTRACT NUMBER:
The FY25 Munis contract number is 3203152

$$$$$ SOURCE/REVENUE: ☒Expense ☐Revenue

The funding source is:
Fund Name/Number: Wastewaster/Fund 500
Munis Org Name/Number: WW - Collection/5000362
Munis Object Name/Number: Repair and Maint Sys Equip/520150 $800,000
Munis Object Name/Number: WIP Construction/572970 $700,000

If the project is grant funded? List grant award number: _____

Grant Manager / Accounting Officer Approval: _____ **Date:** ___
Comment/Exceptions: _____

Project Ledger #: _____

Budget Officer Approval: Andy Hopkins **Date:** 10/25/2024

Comment/Exceptions: _____

CAPITAL ASSET (will this procurement result in a tangible item that costs more than $5,000?):

☐Yes | ☐ No n/a

 # (if known): _____

Repair or Replacement of Existing Equipment:

☒Yes | ☐ No
If yes -> ☒Repair | ☒ Replacement

Please explain: Contract is for on-call repair or parcial replacement of collection system components.

Capital Project:
(New and improvement projects that are going to cost $10,000 or more)
☒ Yes | ☐ No

Project Ledger #: WWD2550003

Anticipated length of project: 6/30/25

Asset Manager Approval: **Date:**
Comment/Exceptions:

Department Approvals:
IT Components: ☐ **Yes |** ☒ **No**
Vehicles: ☐ **Yes |** ☒ **No**
Facilities, Furniture, Fixtures, Equipment: ☐ **Yes |** ☒ **No**

Approval: Emily K. Oster **Title:** Finance Director **Date**: 10/30/2024
Approval: **Title:** **Date**:
Comment & Exceptions:

Department Contract Administrator Contact Info:

ATTACHMENTS:

Original Contract
Amendment #1
BAR
COI & BR updated no attachment

Item#_____
Munis Contract#3203152
Original Contract Item#21-0660
SWPA/GSA/Coop/RFP/ITB #: 21/46/B

CITY OF SANTA FE
AMENDMENT No. 1 TO
CAPITAL IMPORVEMENTS PROGRAM
ITEM# 21-0660

This AMENDMENT No. 1 (the "Amendment") amends the CITY OF SANTA FE **ON-CALL REPAIR, REPLACEMENT, EXTENSION, AND REHABILITATION OF SEWER COLLECTION SYSTEM** CONTRACT, dated December 9, 2021 (the "Contract"), between the City of Santa Fe (the "City") and Sub Surface Contracting, Inc. (the "Contractor"). The date of this Amendment shall be the date when it is executed by the City and the Contractor whichever occurs last.

RECITALS:

A. Under the terms of the Contract, Contractor has agreed to provide the On-Call Repair, Replacement, Extension, And Rehabilitation of Sewer Collection System services.

B. Pursuant to Article 14 of the Contract, and for good and valuable consideration, the receipt and sufficiency of which are acknowledged by the parties, the City and the Contractor agree as follows:

2. COMPENSATION.

The amount of compensation is increased by a total of $1,500,000.00 so that Article 2, paragraph A reads in its entirety as follows:

A. The City shall pay to the Contractor in full payment for services satisfactorily performed up to a maximum of $2,428,956.47 including NMGRT total for the contract.

C. CONTRACT IN FULL FORCE.

Except as specifically provided in this Amendment, the Contract remains and shall remain in full force and

effect, in accordance with its terms.

IN WITNESS WHEREOF, the parties have executed this Amendment No. 1 to the Contract as of the dates set forth below.

CITY OF SANTA FE:

_____
ALAN WEBBER, MAYOR

DATE:_____

CONTRACTOR:
Sub Surface Contracting, Inc

Neal Keiper (Sep 24, 2024 10:03 MDT)
_____
NEAL KEIPER, PRESIDENT

DATE: Sep 24, 2024

CRS# #0210425600

ATTEST:

_____
GERALYN CARDENAS, INTERIM CITY CLERK

CITY ATTORNEY'S OFFICE:

Marcos Martinez
Marcos Martinez (Sep 24, 2024 10:04 MDT)
_____
SENIOR ASSISTANT CITY ATTORNEY

APPROVED FOR FINANCES:

Emily K. Oster
_____
FINANCE DIRECTOR

Contract_Amendment Sub Surface-FINAL CAO

Final Audit Report 2024-09-24

Created:	2024-09-20
By:	Amy Cawthon (amcawthon@santafenm.gov)
Status:	Signed
Transaction ID:	CBJCHBCAABAAMJj9XJhjFGFiJIWGtxMDPWbqTggpmbiw

"Contract_Amendment Sub Surface-FINAL CAO" History

Document created by Amy Cawthon (amcawthon@santafenm.gov)
2024-09-20 - 7:56:49 PM GMT- IP address: 63.232.20.2

Document emailed to nealkeiper@gmail.com for signature
2024-09-20 - 7:57:34 PM GMT

Email viewed by nealkeiper@gmail.com
2024-09-21 - 7:51:53 PM GMT- IP address: 104.28.85.113

Email viewed by nealkeiper@gmail.com
2024-09-23 - 1:02:58 AM GMT- IP address: 104.28.111.148

Signer nealkeiper@gmail.com entered name at signing as Neal Keiper
2024-09-24 - 4:03:40 PM GMT- IP address: 174.205.160.18

Document e-signed by Neal Keiper (nealkeiper@gmail.com)
Signature Date: 2024-09-24 - 4:03:42 PM GMT - Time Source: server- IP address: 174.205.160.18

Document emailed to Marcos Martinez (mdmartinez@santafenm.gov) for signature
2024-09-24 - 4:03:48 PM GMT

Email viewed by Marcos Martinez (mdmartinez@santafenm.gov)
2024-09-24 - 4:04:07 PM GMT- IP address: 76.127.1.192

Document e-signed by Marcos Martinez (mdmartinez@santafenm.gov)
Signature Date: 2024-09-24 - 4:04:26 PM GMT - Time Source: server- IP address: 76.127.1.192

Agreement completed.
2024-09-24 - 4:04:26 PM GMT

Powered by Adobe Acrobat Sign

Log # *{Finance use only}*:	
Journal # *{Finance use only}*:	

City of Santa Fe, New Mexico
BUDGET AMENDMENT RESOLUTION (BAR)

DEPARTMENT / DIVISION NAME	DATE
Public Utilities/Wastewater	8/28/2024

ITEM DESCRIPTION	ORG	OBJECT	PROJECT	INCREASE	DECREASE
EXPENDITURES				*{enter as positive #}*	*{enter as negative #}*
Rep and Maint System Equip	5000362	520150	WWD2550003	$ 800,000.00	
WIP Construction	5000375	572970	WWD2550003	$ 700,000.00	
REVENUES				*{enter as negative #}*	*{enter as positive #}*
				$ 1,500,000	$ -

JUSTIFICATION: *(use additional page if needed)*
--Attach supporting documentation/memo
To increase contract #3203152 for Sub Sruface - CIP - maint and repair/construction in the amount of $1,500,000 from cash to increase total contract to $1,500,000.

{Complete section below if BAR results in a net change to ANY Fund}

Fund(s) Affected	Fund Balance Increase/(Decrease)
500	(1,500,000)
TOTAL:	**(1,500,000)**

Linda Macallister — Sep 20, 2024
Linda Macallister (Sep 20, 2024 14:40 MDT)
Prepared By *{print name}* — Date

{Use this form for Finance Committee/ City Council agenda items ONLY}

CITY COUNCIL APPROVAL

City Council Approval Date

Agenda Item #:

Andy Hopkins — 10/25/2024
Budget Officer — Date

Division Director Signature *{optional}* — Date

Finance Director *{≤ $5,000}* — Date

John Dupuis (Sep 24, 2024 07:19 MDT) — Sep 24, 2024
Department Director Signature — Date

City Manager *{≤ $60,000}* — Date

City of Santa Fe, New Mexico

memo

Date: October 18, 2021

To: Public Works-Public Utilities Committee / Finance Committee

From: Michael L. Dozier, Wastewater Division Director MD
Stan Holland, Wastewater Division Engineer SH

Via: Shannon W. Jones, Utility Division Director SJ

RE: Request to Award Invitation to Bid # '21/46/B for the Publicly Owned Treatment Works (POTW) On-Call Repair, Replacement, Extension and Rehabilitation of Sewer Collection System Price Agreement, CIP #962 to Sub Surface Contracting, Inc., Allied 360 Construction, LLC. and TLC Plumbing, Inc. for a total amount up to $200,000 inclusive of nmgrt.

ITEM AND ISSUE:

1) The Wastewater Division requests award of Bid Number '21/46/B for the Publicly Owned Treatment Works (POTW) On-Call Repair, Replacement, Extension and Rehabilitation of Sewer Collection System Price Agreement, CIP #962 to Sub Surface Contracting, Inc., Allied 360 Construction, LLC. and TLC Plumbing, Inc. for the remainder of Four (4) Fiscal Years, FY 2021-22 until FY2024-25. Initial funding of $200,000.00 inclusive of NMGRT is requested for FY2021-22. Future funding will depend upon budget availability.

BACKGROUND AND SUMMARY:

The Publicly Owned Treatment Works (POTW) On-Call Repair, Replacement, Extension and Rehabilitation of Sewer Collection System Price Agreement is an on-call requirements contract, with the Wastewater Division issuing work orders as needed for work such as public sewer line replacements and work within the Wastewater Treatment Plant. The contract is funded from the Wastewater Division's Collection Section (Sewer Line Maintenance) and the Wastewater Facility Operations Section. The initial Contract amount is limited to $200,000.00 inclusive of New Mexico Gross Receipt Tax (NMGRT).

This was a multi-contractor award Invitation to Bid (ITB) to set the applicable Bid Items for future work. The ITB was only used to select the winning Contractors. Future work will be assigned under fully signed Work Orders for planned work or will be followed with a signed Work Order for Emergency repairs. The exact type of work required will be used to select from the applicable Bid Items. Not every Bit Item is anticipated to be used.

The initial contract period is Fiscal Years 2021-2025. The bids for this project were opened on June 24, 2021 and were subsequently evaluated for completeness and accuracy. The base bids are $163,971.00 and $166,293.00 for Allied 360 Construction. and Sub Surface Contracting respectively and were very similar in pricing for certain types of work. TLC was the highest bidder at $244,863.15.

Sub Surface Contracting has had the current On-Call Contract with the Wastewater Division for the past four years.

The Wastewater Division has verified with Los Alamos County that Allied 360 Construction has satisfactorily completed some of the type work outlined in the Bid.

TLC Inc. had the on-call contract with the Wastewater Division in the past prior to Sub Surface. TLC is also lower in pricing for some specialty work items like pipe bursting, trenchless spot repairs and major sewer line replacements and they have a larger work force to call upon.

For these reasons, it was decided to award and utilize all three (3) Contractors

A summary of the bids is provided below:

Bidders	Total Bid without NMGRT
Allied 360 Construction	$163.971.00
Sub Surface Contracting, Inc.	$166,293.00
TLC Plumbing & Utility	$244,863.15

CONTRACT NUMBER:
The FY22 Munis contract number:
Sub Surface Contracting # 3203056
Allied 360 # 3203057
TLC # 3203058

FUNDING SOURCE:
The funding source is:
Waste Water Operating Collections and Operations
FY 2022
Fund Name/Number: Waste Water Enterprise Fund/ 505
Munis Org Name/Number: Operations 5000367; Collections 5000362
Munis Object Name/Number: Repair & Maint. System Equip. / 520150

Funds for this work are available in Business Unit, Line Item 5000362-520150 (Collections) in the amount of $150,000.00 including NMGRT and Business Unit, Line Item 5000367-520150 (Operations) in the amount of $50,000.00

RECOMMENDATION:

The Wastewater Division recommends:

- Review and approval of award of contracts to Sub Surface Contracting, Inc., Allied 360 Construction and TLC Plumbing & Utility for Bid # '21/46/B for the FY 21/22 Publicly Owned

Treatment Works (POTW) On-Call Repair, Replacement, Extension and Rehabilitation of Sewer Collection System Price Agreement, CIP #962 for a total amount of $200,000.00 inclusive of NMGRT for FY2021-22.

- Forwarding and recommendation of approval of award and contract to the Finance Committee for their consideration and approval and to the Governing Body for their final consideration and approval.

(Rev. 4/20)

City of Santa Fe
Central Purchasing Office

Price Agreement

Awarded Contractor(s):
1) Allied 360 Construction, LLC.
2) Sub Surface Contracting, Inc.
3) TLC Plumbing, Inc.

(see page 15 for contact info)

Price Agreement Number:

Payment Terms: Net 30

Ship To:
All City of Santa Fe Departments and Political Subdivisions allowed by Law

F.O.B.: Destination

Invoice To:
City of Santa Fe
Accounts Payable
PO Box 909
Santa Fe, NM 87504-0909

Term: July 1, 2021 to June 30, 2025

Delivery: As requested by Department

Title: Publicly Owned Treatment Works (POTW) On-Call Repair, Replacement, Extension and Rehabilitation of Sewer Collection System Price Agreement CIP #962

This Price Agreement is to be awarded pursuant to the respective Invitation to Bid (ITB) 21/46/B and shall become a part thereof.

This Price Agreement is made subject to the "terms and conditions" as indicated on subsequent price agreement articles and construction contract pages.

Instructions to Supplier:

- By commencing under this Price Agreement (Agreement), the Contractor agrees to all terms and conditions within and attached and agrees that if there is a conflict with the Contractors terms, the City of Santa Fe's terms and conditions shall govern. In cases of discrepancy between the work order, purchase order and this Agreement, the terms and conditions of this Agreement shall prevail.
- Do not fill orders for goods/services not listed in this Agreement.
- Orders against this Agreement must be placed with as a separate contract work order with a purchase order.
- Do not fill orders without a valid quote, purchase order work order.
- The purchase order release number must be on all invoices.
- The City of Santa Fe (City) will not be liable for purchases made by unauthorized individuals.

Please forward all original invoice(s) to the Accounts Payable Department at PO Box 909, Santa Fe, NM 87504-0909

Instructions to Requesting Department:

- Do not place orders for goods/services not listed in the Procurement Contract.
- To place an order against this Procurement Contract, issue a Purchase Order Release before placing the order with the Supplier.

This Price Agreement is made subject to the "terms and conditions" as indicated on subsequent pages.

Terms and Conditions

General: When the City or the Requesting Department issues a contract or a purchase order release, a binding contract is created.

Variation in Quantity: No variation in the quantity of any item called for by this order will be accepted unless such variation has been caused by conditions of loading, shipping, packing or allowances in manufacturing process and then only to the extent, if any, specified in this order.

Assignment:

a. Neither the order, nor any interest therein, nor any claim thereunder, shall be assigned or transferred by the Contractor, except as set forth in Subparagraph 3b or as expressly authorized in writing by the Chief Procurement Officer or his/her designee. No such assignment or transfer shall relieve the Contractor from the obligations and liabilities under this order.

b. Contractor agrees that any and all claims for overcharge resulting from antitrust violations which are borne by the City as to goods, services, and materials purchased in connection with this agreement are hereby assigned to the City.

City Furnished Property: City furnished property shall be returned to the City upon request in the same condition as received except for ordinary wear, tear and modifications ordered hereunder.

Inspection: Final inspection and acceptance will be made at the destination. Supplies rejected at the destination for nonconformance with specifications shall be removed at the Contractor's risk and expense, promptly after notice of rejection.

Inspection of Plant: The Chief Procurement Officer or his/her designee may inspect, at any reasonable time, the part of the Contractor's, or any subcontractor's plant or place of business, which is related to the performance of this contract.

Commercial Warranty: The Contractor agrees that the supplies or services furnished under this order shall be covered by the most favorable commercial warranties the Contractor gives for such to any customer for such supplies or services. The rights and remedies provided herein shall extend to the City and are in addition to and do not limit any rights afforded to the City by any other clause of this order. **Contractor agrees not to disclaim warranties of fitness for a particular purpose of merchantability.**

Taxes: The unit price shall exclude all state taxes.

Default: The City reserves the right to cancel all or any part of this order without cost to the City, if the Contractor fails to meet the provisions of this order and, except as otherwise provided herein, to hold the Contractor liable for any excess cost occasioned by the City due to the Contractor's default. The Contractor shall not be liable for any excess costs if failure to perform the order arises out of causes beyond the control and without the fault or negligence of the Contractor, such causes include but are not restricted to, acts of God or the public enemy, acts of the State or Federal Government, fires, floods, epidemics, quarantine restrictions, strikes, freight embargoes, unusually severe weather and defaults of subcontractors due to any of the above, unless the City shall determine that the supplies or services to be furnished by the subcontractor were obtainable from other sources in sufficient time to permit the Contractor to meet the required delivery scheduled. The rights of

the City provided in this paragraph shall not be exclusive and are in addition to any other rights now being provided by law or under this order.

Non-Collusion: In signing this bid the Contractor certifies he/she has not, either directly or indirectly, entered into action in restraint of free competitive bidding in connection with this offer submitted to the Chief Procurement Officer or his/her designee.

Nondiscrimination: Contractor doing business with the City must be in compliance with the Federal Civil Rights Act of 1964 and Title VII of the Act (Rev. 1979) and the Americans with Disabilities Act of 1990 (Public Law 101-336).

The Procurement Code: Sections 13-1-28 through 13-1-199 NMSA 1978, imposes civil and criminal penalties for its violation. In addition the New Mexico criminal statutes impose felony penalties for bribes, gratuities and kickbacks.

Items: All bid items are to be NEW and of most current production, unless otherwise specified.

Payment for Purchases: Except as otherwise agreed to: late payment charges may be assessed against the Requesting Department in the amount and under the conditions set forth in Section 13-1-158 NMSA 1978.

Workers' Compensation: The Contractor agrees to comply with state laws and rules pertaining to Workers' Compensation benefits for its employees. If the Contractor fails to comply with Workers' Compensation Act and applicable rules when required to do so, this Agreement may be terminated by the contracting agency.

Contractor Personnel: Personnel proposed in the Contractor's written bid to the Procuring Agency are considered material to any work performed under this Price Agreement. Once a Purchase Order or contract has been executed, no changes of personnel will be made by the Contractor without prior written consent of the Requesting Department. Replacement of any Contractor personnel, if approved, shall be with personnel of equal ability, experience, and qualifications. The Contractor will be responsible for any expenses incurred in familiarizing the replacement personnel to insure their being productive to the project immediately upon receiving assignments. Approval of replacement personnel shall not be unreasonably withheld. The Requesting Department shall retain the right to request the removal of any of the Contractor's personnel at any time.

Subcontracting: The Contractor shall not subcontract any portion of the Price Agreement without the prior written approval of the Requesting Department. No such subcontracting shall relieve the Contractor from its obligations and liabilities under this Price Agreement, nor shall any subcontracting obligate payment from the City.

Records and Audit: The Contractor shall maintain detailed time and expenditure records that indicate the date, time, nature, and cost of services rendered during this Price Agreement's term and effect, and retain them for a period of three (3) years from the date of final payment under this Price Agreement. The records shall be subject to inspection by the City. The City shall have the right to audit billings, both before and after payment. Payment for services under this Price Agreement shall not foreclose the right of the City to recover excessive or illegal payments.

Subcontracts: The foregoing requirements for Contractor Personnel, Subcontracting, and Audit shall be inserted into all subcontracts from the prime contractor to the subcontractor.

ARTICLES

Article I – Statement of Work
Under the terms and conditions of this Price Agreement all commissions, institutions, political subdivisions and local public bodies allowed by law may issue orders for items and/or services described herein. The terms and conditions of this Price Agreement shall form a part of each order issued hereunder.

The items and/or services to be ordered shall be as listed under Article X - Price Schedule. All orders issued hereunder will bear both an order number and this Price Agreement number. It is understood that no guarantee or warranty is made or implied by the City's Chief Procurement Officer, his/her designee or the Requesting Department that any order for any definite quantity will be issued under this Price Agreement. The Contractor is required to accept the order and furnish the items and/or services in accordance with the articles contained hereunder for the quantity of each order.

Article II – Term
The term of this Price Agreement, for issuance of orders, shall be as indicated in the specifications.

Article III – Specifications
Items and/or services furnished hereunder shall conform to the requirements of specifications and/or drawings applicable to items listed under Article X-Price Schedule. Orders issued against this schedule will show the applicable Price Agreement item(s), number(s), and price(s); however they may not describe the item(s) fully.

Article IV – Shipping and Billing Instructions
Delivery shall be as called for by the Requesting Department. Shipment shall be made only against specific orders which the Requesting Department may place with the Contractor during the term. Contractor shall ship in accordance with the following instructions:

a. The Contractor shall enclose a packing list with each shipment listing the City's purchasing document number and the Contractor's name, Requesting Department's contact name and location shall be shown on each packing and delivery ticket, package, bill of lading, the commercial parts number (if any) for each item and other correspondence in connection with the shipments. The Requesting Department's count will be accepted by the Contractor as final and conclusive on all shipments not accompanied by a packing ticket.

b. The Contractor's invoice shall be submitted duly certified and shall contain the following information: order number, description of supplies or services, quantities, unit price and extended totals. Separate invoices shall be rendered for each and every complete shipment.

c. Invoices must be submitted to the City's **Accounts Payable** and NOT the Central Purchasing Office.

If Contractor is unable to meet stated delivery the City's Chief Procurement Officer or his/her designee must be notified.

Article V – Termination
The City may terminate this Agreement for convenience or cause. The Contractor may only terminate this Agreement based upon the City's uncured, material breach of this Agreement. Contractor shall give the City written notice of termination at least thirty (30) days prior to the intended date of termination, which notice shall (i) identify all the City's material breaches of this Agreement upon which the termination is based and (ii) state what the City must do to cure such material breaches. Contractor's notice of termination shall only be effective (i) if the City does not cure all material breaches within the thirty (30) day notice period or (ii) in the case of material breaches that cannot be cured within thirty (30) days, the City does not, within the thirty (30) day notice period, notify the Contractor of its intent to cure and begin with due diligence to cure the material breach.

Termination of this Contract, however, shall not affect any outstanding orders. This provision is not exclusive and shall not waive other rights and remedies afforded either party in the event of breach of contract or default. In such instances the contract may be cancelled effective immediately.

Article VI – Amendment
This Price Agreement may be amended by mutual agreement of the City's Chief procurement Officer or his/her designee and the Contractor upon written notice by either party to the other. An amendment to this Price Agreement shall not affect any outstanding orders issued prior to the effective date of the amendment as mutually agreed upon, and as published by the City's Chief procurement Officer or his/her designee. Amendments affecting price adjustments and/or the extension of a price agreement expiration date are not allowed unless specifically provided in the bid and price agreement specifications.

Article VII – Indemnity Clause
Contractor shall indemnify and hold harmless the City, its officers and employees, against liability, claims, damages, losses or expenses arising out of bodily injury to persons or damage to properties caused by, or resulting from Contractor's, and/or its employees, own negligent act or omission while Contractor, and/or its employees, perform or fails to perform its obligations and duties under the Terms and Conditions of this agreement. This hold harmless and indemnification clause is subject to the immunities, provisions, and limitations of the Tort Claims Act (Section 41-4-1, et seq., N.M.S.A. 1978 comp. and Section 57-7-1 N.M.S.A. 1878 comp. and any amendments thereto.

It is specifically agreed between the parties executing this agreement that it is not intended by any of the provisions of any part of the agreement to create in the public or any member thereof a third party beneficiary or to authorize anyone not a party to the agreement to maintain a suit(s) for wrongful death(s), bodily and/ or personal injury(s) to person(s), damage(s) to property(ies) and/or any other claim(s) whatsoever pursuant to the provisions of this agreement.

Contractor shall provide all insurance necessary to employees on the work site, including but not limited to Worker's Compensation.

Article VIII – Issuance or Work Orders
Only written signed Work Orders are valid under this Price Agreement.

Article IX – Packing (if applicable)
Packing shall be in conformance with standard commercial practices.

Article X – Price Schedule
Prices as listed in the item(s) price schedule hereto attached are firm.

Article XI – Wage Rates
Pursuant to the requirements of any Contract entered into that will have a Work Order (WO) in excess of sixty thousand dollars ($60,000) for construction is subject to the minimum wage rate determination issued by the New Mexico Department of Work Force Solutions for this project/WO.

Item# 21-0660
Munis Contract#_____

CITY OF SANTA FE

CAPITAL IMPROVEMENTS PROGRAM

AGREEMENT BETWEEN
CITY AND CONTRACTOR

PUBLICLY OWNED TREATMENT WORKS (POTW) ON-CALL REPAIR, REPLACEMENT, EXTENSION AND REHABILITATION OF SEWER COLLECTION SYSTEM PRICE AGREEMENT CIP #962

THIS AGREEMENT is made and entered into by and between the **CITY OF SANTA FE, NEW MEXICO**,hereinafter referred to as the "City," and **ALLIED 360 CONSTRUCTION, LLC., SUB SURFACE CONTRACTING, INC. AND TLC PLUMBING, INC.**, hereinafter referred to as the "Contractor(s)" and is effective as of the date set forth below upon which it is executed by the Parties.

IT IS AGREED BETWEEN THE PARTIES:

1. **Scope of Work.**
   A. The Contractor shall perform the following work:

      1) The City of Santa Fe Public Utilities Department Publicly Owned Treatment Works (POTW) On-call repair, replacement, extension and rehabilitation of sewer collection system Price Agreement and work related to those systems. This procurement will be based on a vendor supplying pricing through an established cost schedule (attached). The price agreement will contain the contractor's commitment to offer services and willingness to respond 'on-call 'to the requests when such requests are originated and authorized by the City of Santa Fe.

      The work under this contract is located in the City of Santa Fe at various sites throughout the City. The scope of work consists of furnishing all mobilization, labor, material, equipment and services, unless otherwise specified, for on-call emergency service and for routine work for the City of Santa Fe Sanitary Sewer Treatment Facility and Sanitary Sewer Collection System and appurtenances. Work to include repair, replacement, extension and rehabilitation of the sewer collection system to include trenching, excavation, backfill and compaction at excavation site, cleaning of loose debris, soil density testing, and any other incidental items necessary for the safety, health and welfare of the general public and to complete Work authorized under a Work Oder and in accordance with the drawings, specifications, and other Contract Documents.

   B. The Work to install fully functioning, warrantied sewer lines and manholes and other work issued by a Work Order includes, but is not limited to the following:

      1. Installation of all specified sewer lines, sewer manholes and service connections, etc.
      2. Earthwork, grading and compaction for the restoring the driving surface over disturbed

areas.

3. Coordination with Public Service Company of New Mexico (PNM) as required
4. Coordination with the New Mexico Gas Company as required
5. Coordination with Century Link as required
6. Coordination with New Mexico NM811 and/or contracting with utility location providers as required.
7. Coordination with the City's Wastewater Division for periodic review of system installations.
8. Any other related work associated with this work, as drawn and specified in the WO.
9. Provide all required materials testing.
10. Provide 12 month Contractor's warranty on installed sewer collection systems, parts and labor.
11. Provide Manufacturer's warranties on miscellaneous parts and labor.

C. The Contractor shall be responsible for adherence to the Contract Documents, Work Orders, Specifications and approved directives and Change Orders:

- The Contractor shall be responsible for State CID requirements and permit.
- The Contractor shall be responsible for verifications
- of all existing conditions, measurements and dimensions before signing each WO.
- The Contractor shall be responsible for all permits, fees, and State and/or City inspections associated with the construction.

D. The Contractor shall perform all the work required by the Wastewater Management Division, as required, on each Work Order (WO) in the Contract Documents (attached) for the City of Santa Fe Public Utilities Department Publicly Owned Treatment Works (POTW) On-call Repair, Replacement, Extension and Rehabilitation of Sewer Collection System Price Agreement.

E. The Contractor shall be responsible for verifications of all measurements and dimensions for bidding on each subsequent Work Order.

F. The Contractor shall provide and keep at the work site, a complete "as-built" record set of drawings that shall be corrected daily and shall show every change from the original approved drawings and specifications. These changes shall be forwarded to City periodically. The drawings shall reflect exact and actual "as-built" conditions of construction, installation, and erection as it progresses. Where drawings are not adequate to show "as-built" conditions, Contractor shall prepare sketches which delineate the necessary "as-built" information. City shall furnish two (2) sets of all paper "blue-line" print "approved" drawings for use in accomplishing specified mark-up. Final "as-built" drawings shall be delivered to City by Contractor upon completion of the work.

G. The Contractor shall be responsible for maintaining traffic control at the site in conformance with the Manual on Uniform Traffic Control Devices.

H. The Contractor shall be responsible for all permits, fees, and State and City inspections associated with the construction.

I. Incorporation by Reference. All exhibits, addenda, schedules of ITB 21/46/B attached hereto and all certificates, work order documents, drawings, as-builts and other instruments contemplated to be delivered hereunder are hereby expressly made a part of this Agreement as fully as thoughset forth herein, and all references to this Agreement herein or in any of such writings shall be deemed to refer to and include all of such writings. This Agreement contains the entire agreement between the parties with respect to the subject matter hereof and supersedes all prior agreements and understandings, both written and oral, among the parties with respect to the subject matter hereof. If there is any conflict between such exhibits or addenda and the terms of this Agreement, such exhibits or addenda shall control.

2. **Compensation.**

A. The City shall pay to the Contractor in full payment for services satisfactorily performed BASED UPON THE ATTACHED PRICE SHEETS, DELIVERABLES, MILESTONES, AND COMPLETED WORK ORDERS (WO) including gross receipts tax.

The applicable gross receipts taxes or local option taxes shall be shown as a separate amount on each billing or request for payment made under the contract.

The parties do not intend for the Contractor to continue to provide services without compensation when the total compensation amount is reached. In no event will the Contractor be paid for services provided in excess of the total compensation amount without this Agreement being amended in writing prior to those services in excess of the total compensation amount being provided.

B. Payment is subject to availability of funds pursuant to the Appropriations Paragraph set forth below and to any negotiations between the parties from year to year pursuant to Paragraph 1, Scope of Work, and to approval by the City. All invoices MUST BE received by the City no later than thirty 30) days after the termination of the Fiscal Year in which the services were delivered. Invoices received after such date WILL NOT BE PAID.

C. Payment in future fiscal years is subject to availability of funds pursuant to the Appropriations Paragraph set forth below and to any negotiations between the parties from year to year pursuant to Paragraph 1, Scope of Work, and to approval by the City. All invoices MUST BE receivedby the City no later than fifteen (15) days after the termination of the Fiscal Year in which the services were delivered. Invoices received after such date WILL NOT BE PAID.)

E. The Contractor must submit a detailed statement accounting for all services performed and expenses incurred. If the City finds that the services are not acceptable, within thirty days after thedate of receipt of written notice from the Contractor that payment is requested, it shall provide the Contractor a letter of exception explaining the defect or objection to the services, and outlining steps theContractor may take to provide remedial action. Upon certification by the City that the services have been received and accepted, payment shall be tendered to the Contractor within thirty days after the dateof acceptance. If payment is made by mail, the payment shall be deemed tendered on the date it is postmarked. However, the City shall not incur late charges, interest, or penalties for failure to make payment within the time specified herein.

3. **Term.**

THIS AGREEMENT SHALL NOT BECOME EFFECTIVE UNTIL APPROVED BY THE CITY. This Agreement shall terminate on **June 30, 2025** unless terminated pursuant to paragraph 4 (Termination), or paragraph 5 (Appropriations). In accordance with Section 13-1-150 NMSA 1978, no contract term for a professional services contract, including extensions and renewals, shall exceed four years, except as set forth in Section 13-1-150 NMSA 1978.

4. **Termination.**

A. Termination. This Agreement may be terminated by either of the parties hereto upon written notice delivered to the other party at least thirty (30) days prior to the intended date of termination. Except as otherwise allowed or provided under this Agreement, the City's sole liability upon such termination shall be to pay for acceptable work performed prior to the Contractor's receipt of the notice of termination, if the City is the terminating party, or the Contractor's sending of the notice of termination, if the Contractor is the terminating party; provided, however, that a notice of termination shall not nullify or otherwise affect either party's liability for pre-termination defaults under or breaches of this Agreement. The Contractor shall submit an invoice for such work within thirty (30) days of receiving or sending the notice of termination. Notwithstanding the foregoing, this Agreement may be terminated immediately upon written notice to the Contractor if the Contractor becomes unable to perform the services contracted for, as determined by the City or if, during the term of this Agreement, the Contractor or any of its officers, employees or agents is indicted for fraud, embezzlement or other crime due to misuse of City funds or due to the Appropriations paragraph herein. *THIS PROVISION IS NOT EXCLUSIVE AND DOES NOT WAIVE THE City's OTHER LEGAL RIGHTS AND REMEDIES CAUSED BY THE CONTRACTOR'S DEFAULT/BREACH OF THIS AGREEMENT.*

B. Termination Management. Immediately upon receipt by either the City or the Contractor of notice of termination of this Agreement, the Contractor shall: 1) not incur any further obligations for salaries, services or any other expenditure of funds under this Agreement without written approval of the City; 2) comply with all directives issued by the City in the notice of termination as to the performance of work under this Agreement; and 3) take such action as the City shall direct for the protection, preservation, retention or transfer of all property titled to the City and records generated under this Agreement. Any non-expendable personal property or equipment provided to or purchased by the Contractor with contract funds shall become property of the City upon termination and shall be submitted to the City as soon as practicable.

5. **Appropriations.**

The terms of this Agreement are contingent upon sufficient appropriations and authorization being made by the City Council for the performance of this Agreement. If sufficient appropriations and authorization are not made by the City Council, this Agreement shall terminate immediately upon written notice being given by the City to the Contractor. The City's decision as to whether sufficient appropriations are available shall be accepted by the Contractor and shall be final. If the City proposes an amendment to the Agreement to unilaterally reduce funding, the Contractor shall have the option to terminate the Agreement or to agree to the reduced funding, within thirty (30) days of receipt of the proposed amendment.

6. **Status of Contractor.**

The Contractor and its agents and employees are independent contractors performing professional services for the City and are not employees of the City. The Contractor and its agents and

employees shall not accrue leave, retirement, insurance, bonding, use of City vehicles, or any other benefits afforded to employees of the City as a result of this Agreement. The Contractor acknowledges that all sums received hereunder are reportable by the Contractor for tax purposes, including without limitation, self-employment and business income tax. The Contractor agrees not to purport to bind the City unless the Contractor has express written authority to do so, and then only within the strict limits of that authority.

7. **Construction Contract Performance and Payment Bond.**

A. When a construction contract is awarded in excess of twenty-five thousand dollars ($25,000), the following bonds or security shall be delivered to the City and shall become binding on the parties upon the execution of the contract. If the Contractor fails to deliver the required performance and payment bonds, the Contractor's bid shall be rejected, its bid security shall be enforced to the extent of actual damages. Award of the contract shall be made pursuant to the Procurement Code in the following manner:

1) a performance bond satisfactory to the City, executed by a surety company authorized to do business in this state and said surety to be approved in federal circular 570 as published by the United States treasury department or the state board of finance or the local governing authority, in an amount equal to one hundred percent of the price specified in the contract; and

2) a payment bond satisfactory to the City, executed by a surety company authorized to do business in this state and said surety to be approved in federal circular 570 as published by the United States treasury department or the state board of finance or the local governing authority, in an amount equal to one hundred percent of the price specified in the contract, for the protection of all persons supplying labor and material to the contractor or its subcontractors for the performance of the work provided for in the contract.

B. A subcontractor shall provide a performance and payment bond on a public works building project if the subcontractor's contract for work to be performed on a project is one hundred twenty-five thousand dollars ($125,000) or more.

8. **Assignment.**

The Contractor shall not assign or transfer any interest in this Agreement or assign any claims for money due or to become due under this Agreement without the prior written approval of the City.

9. **Subcontracting.**

The Contractor shall not subcontract any portion of the services to be performed under this Agreement without the prior written approval of the City. No such subcontract shall relieve the primary Contractor from its obligations and liabilities under this Agreement, nor shall any subcontract obligate direct payment from the City.

10. **Release.**

Final payment of the amounts due under this Agreement shall operate as a release of the City, its officers and employees from all liabilities, claims and obligations whatsoever arising from or under this Agreement.

11. Confidentiality.

Any confidential information provided to or developed by the Contractor in the performance of this Agreement shall be kept confidential and shall not be made available to any individual or organization by the Contractor without the prior written approval of the City.

12. Product of Service -- Copyright.

All materials developed or acquired by the Contractor under this Agreement shall become the property of the City and shall be delivered to the City no later than the termination date of this Agreement. Nothing developed or produced, in whole or in part, by the Contractor under this Agreement shall be the subject of an application for copyright or other claim of ownership by or on behalf of the Contractor.

13. Conflict of Interest; Governmental Conduct Act.

A. The Contractor represents and warrants that it presently has no interest and, during the term of this Agreement, shall not acquire any interest, direct or indirect, which would conflict in any manner or degree with the performance or services required under the Agreement.

B. The Contractor further represents and warrants that it has complied with, and, during the term of this Agreement, will continue to comply with, and that this Agreement complies with all applicable provisions of the Governmental Conduct Act, Chapter 10, Article 16 NMSA 1978.

C. Contractor's representations and warranties in Paragraphs A and B of this Article 12 are material representations of fact upon which the City relied when this Agreement was entered into by the parties. Contractor shall provide immediate written notice to the City if, at any time during the term of this Agreement, Contractor learns that Contractor's representations and warranties in Paragraphs A and B of this Article 12 were erroneous on the effective date of this Agreement or have become erroneous by reason of new or changed circumstances. If it is later determined that Contractor's representations and warranties in Paragraphs A and B of this Article 12 were erroneous on the effective date of this Agreement or have become erroneous by reason of new or changed circumstances, in addition to other remedies available to the City and notwithstanding anything in the Agreement to the contrary, the City may immediately terminate the Agreement.

D. All terms defined in the Governmental Conduct Act have the same meaning in this section.

14. Amendment.

A. This Agreement shall not be altered, changed or amended except by instrument in writing executed by the parties hereto and all other required signatories.

B. If the City proposes an amendment to the Agreement to unilaterally reduce funding due to budget or other considerations, the Contractor shall, within thirty (30) days of receipt of the proposed Amendment, have the option to terminate the Agreement, pursuant to the termination provisions as set forth in Article 4 herein, or to agree to the reduced funding.

15. Change Orders.

Changes. The Contractor may only make changes or revisions within the Scope of Work as defined by

Article 1 and/or Exhibit 1 after receipt of written approval by the City Manager or his/her designee. Such change may only be made to Tasks or Sub-Task as defined in the Scope of Work. Under no circumstance shall such change affect the:

1. Deliverable requirements, as outlined in the Scope of Work;
2. Due date of any Deliverable, as outlined in the Scope of Work;
3. Compensation of any Deliverable, as outlined in the Scope of Work;
4. Agreement compensation, as outlined in Article 2; or
5. Agreement termination, as outlined in Article 4.

Change Request Process. In the event that circumstances warrant a change to accomplish the Scope of Work as described above, a Change Request shall be submitted that meets the following criteria:

The Project Manager shall draft a written Change Request for review and approval by the City Manager to include:

1. the name of the person requesting the change;
2. a summary of the required change;
3. the start date for the change;
4. the reason and necessity for change;
5. the elements to be altered; and
6. the impact of the change.

The City Manager shall provide a written decision on the Change Request to the Contractor within a maximum of ten (10) Business Days of receipt of the Change Request. All decisions made by the City Manager are final. Change Requests, once approved, become a part of the Agreement and become binding as a part of the original Agreement.

16. Merger.

This Agreement incorporates all the Agreements, covenants and understandings between the parties hereto concerning the subject matter hereof, and all such covenants, Agreements and understandings have been merged into this written Agreement. No prior Agreement or understanding, oral or otherwise, of the parties or their agents shall be valid or enforceable unless embodied in this Agreement.

17. Entire Agreement.

This Agreement, together with any other documents incorporated herein by reference and all related Exhibits and Schedules constitutes the sole and entire agreement of the Parties with respect to the subject matter of this Agreement, and supersedes all prior and contemporaneous understandings, agreements, representations, and warranties, both written and oral, with respect to the subject matter. In the event of any inconsistency between the statements in the body of this Agreement, and the related Exhibits and Schedules, the statements in the body of this Agreement shall control.

18. Penalties for violation of law.

The Procurement Code, Sections 13-1-28 through 13-1-199, NMSA 1978, imposes civil and criminal penalties for its violation. In addition, the New Mexico criminal statutes impose felony penalties for illegal bribes, gratuities and kickbacks.

19. Equal Opportunity Compliance.

The Contractor agrees to abide by all federal and state laws and rules and regulations, and Santa Fe City Code, pertaining to equal employment opportunity. In accordance with all such laws of the State of New Mexico, the Contractor assures that no person in the United States shall, on the grounds of race, religion, color, national origin, ancestry, sex, age, physical or mental handicap, or serious medical condition, spousal affiliation, sexual orientation or gender identity, be excluded from employment with or participation in, be denied the benefits of, or be otherwise subjected to discrimination under any program or activity performed under this Agreement. If Contractor is found not to be in compliance with these requirements during the life of this Agreement, Contractor agrees to take appropriate steps tocorrect these deficiencies.

20. Applicable Law.

The laws of the State of New Mexico shall govern this Agreement, without giving effect to its choice of law provisions. Venue shall be proper only in a New Mexico court of competent jurisdiction in accordance with Section 38-3-1 (G) NMSA 1978. By execution of this Agreement, Contractor acknowledges and agrees to the jurisdiction of the courts of the State of New Mexico over any and all lawsuits arising under or out of any term of this Agreement.

21. Workers Compensation.

The Contractor agrees to comply with state laws and rules applicable to workers compensation benefits for its employees. If the Contractor fails to comply with the Workers Compensation Act and applicable rules when required to do so, this Agreement may be terminated by the City.

22. Professional Liability Insurance.

Contractor shall maintain professional liability insurance throughout the term of this Agreement providing a minimum coverage in the amount required under the New Mexico Tort Claims Act. The Contractor shall furnish the City with proof of insurance of Contractor's compliance with the provisions of this section as a condition prior to performing services under this Agreement.

23. Other Insurance

If the services contemplated under this Agreement will be performed on or in City facilities or property, Contractor shall maintain in force during the entire term of this Agreement, the following insurance coverage(s), naming the City as additional insured.

A. **Commercial General Liability** insurance shall be written on an occurrence basis and be a broad as ISO Form CG 00 01 with limits not less than $2,000,000 per occurrence and $2,000,000 in the aggregate for claims against bodily injury, personal and advertising injury, and property damage. Said policy shall include broad form Contractual Liability coverage and be endorsed to name the City of Santa Fe their officials, officers, employees, and agents as additional insureds.

B. **Business Automobile Liability** insurance for all owned, non-ownedautomobiles, with a combined single limit not less than $1,000,000 per accident.

C. **Broader Coverage and Limits.** The insurance requirements under this Agreement shall be the greater of (1) the minimum coverage and limits specified in this Agreement, or (2) the broader coverage and maximum limits of coverage of any insurance policy

or proceeds available to the Named Insured. It is agreed that these insurance requirements shall not in any way act to reduce coverage that is broader or that includes higher limits than the minimums required herein. No representation is made that the minimum insurance requirements of this Agreement are sufficient to cover the obligations of Contractor hereunder.

D. Contractor shall maintain the above insurance for the term of this Agreement and name the City as an additional insured and provide for 30 days cancellation notice on any Certificate of Insurance form furnished by Contractor. Such certificate shall also specifically state the coverage provided under the policy is primary over any other valid and collectible insurance and provide a waiver of subrogation.

24. Records and Financial Audit.

The Contractor shall maintain detailed time and expenditure records that indicate the date; time, nature and cost of services rendered during the Agreement's term and effect and retain them for a period of three (3) years from the date of final payment under this Agreement. The records shall be subject to inspection by the City. The City shall have the right to audit billings both before and after payment. Payment under this Agreement shall not foreclose the right of the City to recover excessive or illegal payments

25. Indemnification.

The Contractor shall defend, indemnify and hold harmless the City from all actions, proceeding, claims, demands, costs, damages, attorneys' fees and all other liabilities and expenses of any kind from any source which may arise out of the performance of this Agreement, caused by the negligent act or failure to act of the Contractor, its officers, employees, servants, subcontractors or agents, or if caused by the actions of any client of the Contractor resulting in injury or damage to persons or property during the time when the Contractor or any officer, agent, employee, servant or subcontractor thereof has or is performing services pursuant to this Agreement. In the event that any action, suit or proceeding related to the services performed by the Contractor or any officer, agent, employee, servant or subcontractor under this Agreement is brought against the Contractor, the Contractor shall, as soon as practicable but no later than two (2) days after it receives notice thereof, notify the legal counsel of the City.

26. New Mexico Tort Claims Act

Any liability incurred by the City of Santa Fe in connection with this Agreement is subject to the immunities and limitations of the New Mexico Tort Claims Act, Section 41-4-1, et. seq. NMSA 1978, as amended. The City and its "public employees" as defined in the New Mexico Tort Claims Act, do not waive sovereign immunity, do not waive any defense and do not waive any limitation of liability pursuant to law. No provision in this Agreement modifies or waives any provision of the New Mexico Tort Claims Act.

27. Invalid Term or Condition.

If any term or condition of this Agreement shall be held invalid or unenforceable, the remainder of this Agreement shall not be affected and shall be valid and enforceable.

28. Enforcement of Agreement.

A party's failure to require strict performance of any provision of this Agreement shall not waive or diminish that party's right thereafter to demand strict compliance with that or any other provision. No waiver by a party of any of its rights under this Agreement shall be effective unless express and in writing, and no effective waiver by a party of any of its rights shall be effective to waive any other rights.

29. Notices.

Any notice required to be given to either party by this Agreement shall be in writing and shall be delivered in person, by courier service or by U.S. mail, either first class or certified, return receipt requested, postage prepaid, as follows:

To the City:
City of Santa Fe
Wastewater Management Division
73 Paseo Real
Santa Fe, New Mexico 87507
(505) 955-4650

To the Contractor(s):

1) Allied 360 Construction, LLC
Contact: Patrick Herrera, Managing Member/Owner
P.O. Box 1913
Espanola, NM 87532
Ph: (505) 470-5779
Email: patrickherrera@ymail.com

2) Sub-Surface Contracting, Inc.
Contact: Neal J. Keiper / Owner-President
27 Paseo de River
Santa Fe, NM 87507
Ph: (505) 473-1000
Email:

3) TLC Plumbing, Inc.
Contact: Eddie Padilla, Chief Dev. Officer
5000 Edith Blvd. NE
Albuquerque, NM 87107
Ph: (505) 761-9696
Email:

30. Authority.

If Contractor is other than a natural person, the individual(s) signing this Agreement on behalf of Contractor represents and warrants that he or she has the power and authority to bind Contractor, and that no further action, resolution, or approval from Contractor is necessary to enter into a binding contract.

IN WITNESS WHEREOF, the Parties have executed this Agreement as of the date of the signature by the required approval authorities below.

CITY OF SANTA FE:

ALAN WEBBER, MAYOR

DATE: Dec 9, 2021

ATTEST:

KRISTINE BUSTOS MIHELCIC,
CITY CLERK
GB MTG 12/08/2021

CITY ATTORNEY'S OFFICE:

Marcos Martinez
Marcos Martinez (Jul 28, 2021 09:10 MDT)
SENIOR ASSISTANT CITY ATTORNEY

APPROVED FOR FINANCES:

MARY MCCOY, FINANCE DIRECTOR
5000362.520150; 5000367.520150
Org. Name/Org#. AJH
AJH

CONTRACTOR:
TLC PLUMBING, INC.

NAME: Eddie C. Padilla

TITLE: Chief Development Officer

DATE: 8/23/21

CRS# 02-226090-000
BRN# 222153

IN WITNESS WHEREOF, the Parties have executed this Agreement as of the date of the signature by the required approval authorities below.

CITY OF SANTA FE:

ALAN WEBBER, MAYOR

DATE: Dec 9, 2021

ATTEST:

KRISTINE BUSTOS MIHELCIC, CITY CLERK
GB MTG 12/08/2021

CITY ATTORNEY'S OFFICE:

Marcos Martinez
Marcos Martinez (Jul 28, 2021 09:10 MDT)
SENIOR ASSISTANT CITY ATTORNEY

APPROVED FOR FINANCES:

MARY MCCOY, FINANCE DIRECTOR
5000362.520150; 5000367.520150
Org. Name/Org#. AJH
AJH

CONTRACTOR:

SUB SURFACE CONTRACTING, INC.

NAME: Thad Kerr

TITLE: PRESIDENT

DATE: 8-26-21

CRS# 02-104256-000
BRN# 46991

IN WITNESS WHEREOF, the Parties have executed this Agreement as of the date of the signature by the required approval authorities below.

CITY OF SANTA FE:

ALAN WEBBER, MAYOR

DATE: Dec 9, 2021

ATTEST:

KRISTINE BUSTOS MIHELCIC,
CITY CLERK
GB MTG 12/08/2021

CITY ATTORNEY'S OFFICE:

Marcos Martinez
Marcos Martinez (Jul 28, 2021 09:10 MDT)
SENIOR ASSISTANT CITY ATTORNEY

APPROVED FOR FINANCES:

MARY MCCOY, FINANCE DIRECTOR
5000362.520150; 5000367.520150
Org. Name/Org#. AJH
AJH

CONTRACTOR:
Allied 360 Construction, LLC.

NAME: Patrick Herrera
TITLE: Managing Member
DATE: 9/16/2021

CRS# 03-147576000-0
BRN# 231055

CITY OF SANTA FE
PURCHASING OFFICE
200 Lincoln Ave Room 122 Santa Fe, NM 87505
Fran Dunaway, CPO
21/46/B POTW On Call Repair and Replacement

	AWARDED ITEMS	1) Allied 360 Construction, LLC	2) Sub Surface Contracting, Inc.	3) TLC Plumbing, Inc.
ITEM #	ITEM & DESCRIPTION	PRICES	PRICES	PRICES
1	Point Repair, 6" to 8" pipe, remove and replace, 0' to 6 ' in depth including PVC pipe	$4,200.00	$3,550.00	$6,345.00
2	Point Repair, 6" to 8" pipe, remove and replace, 6' to 10' in depth including PVC pipe	$4,400.00	$4,650.00	$9,235.00
3	Point Repair, 6" to 8" pipe, remove and replace, 10' to 16' in depth including PVC pipe	$5,000.00	$8,300.00	$7,365.00
4	Point Repair Additional Cost for remove and replace, greater than 16' depth for 6" to 8" pipe including PVC pipe	$197.00	$1,685.00	$220.00
5	Point Repair, 10" to 15" pipe, remove and replace, 0' to 6 ' in depth including PVC pipe	$5,700.00	$4,450.00	$7,500.00
6	Point Repair, 10" to 15" pipe, remove and replace, 6' to 10' in depth including PVC pipe	$5,200.00	$6,700.00	$10,390.00
7	Point Repair, 10" to 15" pipe, remove and replace, 10' to 16' in depth including PVC pipe	$6,200.00	$9,350.00	$13,945.00
8	Point Repair Additional Cost for excavation greater than 16' depth for 10" to 15" pipe including PVC pipe	$239.00	$1,875.00	$220.00
9	Point Repair, 18" to 24" pipe, remove and replace, 0' to 6' in depth including PVC pipe	$7,600.00	$4,975.00	$11,250.00
10	Point Repair, 18" to 24" pipe, remove and replace, 6' to 10' in depth including PVC pipe	$8,600.00	$7,100.00	$13,255.00
11	Point Repair, 18" to 24" pipe, remove and replace, 10' to 16' in depth including PVC pipe	$9,500.00	$10,500.00	$16,810.00
12	Point Repair Additional Cost for excavation greater than 16' depth for 18" to 24" pipe including PVC pipe	$347.00	$1,875.00	$220.00
13	8" diameter SDR 26 PVC sewer pipe, furnish & place in open trench, complete in place.	$105.00	$75.00	$43.95
14	10" diameter SDR 26 PVC sewer pipe, furnish & place in open trench, complete in place.	$115.00	$85.00	$58.90
15	12" diameter SDR 26 PVC sewer pipe, furnish & place in open trench, complete in place.	$130.00	$95.00	$75.65
16	15" diameter SDR 26 PVC sewer pipe, furnish & place in open trench, complete in place.	$167.00	$105.00	$100.50
17	18" diameter SDR 26 PVC sewer pipe, furnish & place in open trench, complete in place.	$196.00	$125.00	$138.45
18	24" diameter SDR 26 PVC sewer pipe, furnish & place in open trench, complete in place.	$250.00	$140.00	$229.85
19	Trenching, Backfilling & Compaction for 8" to 10" diameter sewer pipe, 0' to 6' in depth, pipe not included, complete.	$25.00	$65.00	$64.20
20	Trenching, Backfilling & Compaction for 8" to 10" diameter sewer pipe, 6' to 10' in depth, pipe not included, complete.	$35.00	$85.00	$74.90
21	Trenching, Backfilling & Compaction for 8" to 10" diameter sewer pipe, 10' to 16' in depth, pipe not included, complete.	$47.00	$125.00	$109.20
22	Additional Cost for Trenching, Backfilling & Compaction greater than 16' depth for 8" to 10" pipe	$45.00	$255.00	$18.20
23	Trenching, Backfilling & Compaction for 12" to 15" diameter sewer pipe, 0' to 6' in depth, pipe not included, complete.	$60.00	$75.00	$64.20
24	Trenching, Backfilling & Compaction for12" to 15" diameter sewer pipe, 6' to 10' in depth, pipe not included, complete.	$75.00	$90.00	$74.90
25	Trenching, Backfilling & Compaction for 12" to 15" diameter sewer pipe, 10' to 16' in depth, pipe not included, complete.	$95.00	$140.00	$109.20
26	Additional Cost for Trenching, Backfilling & Compaction greater than 16' depth for 12" to 15" pipe	$110.00	$265.00	$19.85
27	Trenching, Backfilling & Compaction for 18" to 24" diameter sewer pipe, 0' to 6' in depth, pipe not included, complete.	$110.00	$80.00	$64.20

CITY OF SANTA FE
PURCHASING OFFICE
200 Lincoln Ave Room 122 Santa Fe, NM 87505
Fran Dunaway, CPO
21/46/B POTW On Call Repair and Replacement

	AWARDED ITEMS	1) Allied 360 Construction, LLC	2) Sub Surface Contracting, Inc.	3) TLC Plumbing, Inc.
ITEM #	ITEM & DESCRIPTION	PRICES	PRICES	PRICES
28	Trenching, Backfilling & Compaction for18" to 24" diameter sewer pipe, 6' to 10' in depth, pipe not included, complete.	$112.00	$95.00	$74.90
29	Trenching, Backfilling & Compaction for 18" to 24" diameter sewer pipe, 10' to 16' in depth, pipe not included, complete.	$125.00	$165.00	$136.50
30	Additional Cost for Trenching, Backfilling & Compaction greater than 16' depth for 18" to 14" pipe	$125.00	$275.00	$21.85
31	Pipe Displacement (bursting) 6" to 8" from M.H. to M.H.	$227.00	$498.00	$70.00
32	Pipe Displacement (bursting) 8" to 8" from M.H. to M.H.	$255.00	$585.00	$70.00
33	Pipe Displacement (bursting) 8" to 10" from M.H. to M.H.	$300.00	$610.00	$85.00
34	Traffic Control Residential –per Work Zone –per Day	$1,800.00	$1,220.00	$80.00
35	Traffic Control Non-Residential Major Collectors and Arterials – per Work Zone –per Day	$2,000.00	$1,395.00	$530.00
36	Asphalt Removal, Disposal & Replacement including 6" Base Course and 4" Asphalt	$2,250.00	$17,000.00	$7,550.00
37	Curb/Gutter Removal, Disposal and Replacement	$31.00	$80.00	$65.30
38	Sidewalk Removal, Disposal and Replacement	$41.00	$225.00	$98.45
39	New Manhole, 4' Diameter, type "C" or "E", 6' deep or less, including removal, disposal and restoration of surface, complete in place. Asphalt is separate bid item	$6,800.00	$6,500.00	$12,115.00
40	New Manhole, 4' Diameter, type "C" or "E", over 6' to 10' deep, including removal, disposal and restoration of surface, complete in place. Asphalt is separate bid item	$7,800.00	$8,500.00	$14,360.00
41	New Manhole, 4' Diameter, type "C" or "E", over 10' to 16' deep, including removal, disposal and restoration of surface, complete in place. Asphalt is separate bid item	$1,400.00	$12,000.00	$18,815.00
42	Additional Cost for depth greater than 16' depth for 4' Diameter Manhole	$1,100.00	$975.00	$560.00
43	New 12 inch thick Concrete Manhole Collar where none exists in Dirt Road or Easement area	$2,200.00	$1,550.00	$1,700.00
44	MH Wall Rehabilitation	$100.00	$600.00	$330.00
45	MH Inverts & Shelf Rehabilitation	$2,100.00	$2,400.00	$3,600.00
46	MH Inverts & Base Replacement	$6,200.00	$4,450.00	$20,370.00
47	Sewer Service Connection as part of a Point Repair/Open Trench	$4,250.00	$950.00	$4,320.00
48	Sewer Service Connection- as part of a Pipe Burst 0 to 6' in Depth including Asphalt Replacement.	$9,700.00	$1,450.00	$4,320.00
49	Sewer Service Connection- as part of a Pipe Burst 6' to 10' in Depth including Asphalt Replacement	$1,100.00	$1,825.00	$4,320.00
50	Sewer Service Connection- as part of a Pipe Burst 10' and Greater in Depth including Asphalt Replacement	$395.00	$4,800.00	$430.00
51	MH Cleaning (i.e. debris, roots, etc.)	$4,400.00	$1,275.00	$3,000.00
52	Adjust Existing MH F&C (from grade to 24" deep) including Concrete Collar (City Furnished F&C)	$4,200.00	$2,400.00	$3,800.00
53	Adjust Existing MH F&C (from 24" and deeper) including Concrete Collar(City Furnished F&C & Barrels)	$2,200.00	$2,850.00	$4,255.00
54	Easement Clearance and Grading for Access & Repair Work	$47.00	$250.00	$10.00
55	Rip Rap & Wire Mattress –New Installation	$5,000.00	$675.00	$800.00
56	Gabion Basket –New Installation	$1,100.00	$710.00	$650.00
57	4 to 6 inch Sewer Service Connection to Existing Manhole, 0 to 8 feet Deep -Core Drill	$1,200.00	$1,800.00	$3,415.00
58	4 to 6 inch Sewer Service Connection to Existing Manhole, Greater than 8 feet Deep -Core Drill	$2,400.00	$2,300.00	$340.00
59	Rock Excavation	$65.00	$375.00	$140.00
60	Select Fill Material-Delivered	$3,200.00	$1,295.00	$2,730.00

CITY OF SANTA FE
PURCHASING OFFICE
200 Lincoln Ave Room 122 Santa Fe, NM 87505
Fran Dunaway, CPO
21/46/B POTW On Call Repair and Replacement

	AWARDED ITEMS	1) Allied 360 Construction, LLC	2) Sub Surface Contracting, Inc.	3) TLC Plumbing, Inc.
ITEM #	ITEM & DESCRIPTION	PRICES	PRICES	PRICES
61	Smoke Testing-Supervisor	$14,000.00	$4,800.00	$10,000.00
62	Smoke Testing-Helper	$8,000.00	$3,600.00	$4,240.00
63	Smoke Testing Traffic Control Allowance	$5,000.00	$5,000.00	$5,000.00
64	Materials Testing - Allowance	$2,000.00	$2,000.00	$2,000.00
65	Street Cut Permits - Allowance	$2,000.00	$2,000.00	$2,000.00
	Total Base Bid Incl: allowances, mobilization, Demobilization, labor, materials, equipment, bonding, insurance, etc.	**$163,971.00**	**$166,293.00**	**$244,863.15**

Signature: P. Fred Heerbrandt, P.E.
P. Fred Heerbrandt, P.E. (Sep 20, 2024 14:45 MDT)

Email: pfheerbrandt@santafenm.gov

Signature:

Email: mldozier@santafenm.gov

CERTIFICATE OF LIABILITY INSURANCE

DATE (MM/DD/YYYY) 7/19/2024

THIS CERTIFICATE IS ISSUED AS A MATTER OF INFORMATION ONLY AND CONFERS NO RIGHTS UPON THE CERTIFICATE HOLDER. THIS CERTIFICATE DOES NOT AFFIRMATIVELY OR NEGATIVELY AMEND, EXTEND OR ALTER THE COVERAGE AFFORDED BY THE POLICIES BELOW. THIS CERTIFICATE OF INSURANCE DOES NOT CONSTITUTE A CONTRACT BETWEEN THE ISSUING INSURER(S), AUTHORIZED REPRESENTATIVE OR PRODUCER, AND THE CERTIFICATE HOLDER.

IMPORTANT: If the certificate holder is an ADDITIONAL INSURED, the policy(ies) must have ADDITIONAL INSURED provisions or be endorsed. If SUBROGATION IS WAIVED, subject to the terms and conditions of the policy, certain policies may require an endorsement. A statement on this certificate does not confer rights to the certificate holder in lieu of such endorsement(s).

PRODUCER License # 0757776 HUB International Insurance Services (SOW) 2905 Rodeo Park Drive East Building 6, Suite 100 Santa Fe, NM 87505	CONTACT NAME: Michelle Vialpando PHONE (A/C, No, Ext): (505) 992-1873 FAX (A/C, No): (866) 487-3972 E-MAIL ADDRESS: michelle.vialpando@hubinternational.com
INSURED Sub Surface Contracting Inc 27A Paseo De River St Santa Fe, NM 87507	INSURER(S) AFFORDING COVERAGE / NAIC # INSURER A : ACUITY, A Mutual Insurance Company 14184 INSURER B : Builders Trust of New Mexico INSURER C : INSURER D : INSURER E : INSURER F :

COVERAGES **CERTIFICATE NUMBER:** **REVISION NUMBER:**

THIS IS TO CERTIFY THAT THE POLICIES OF INSURANCE LISTED BELOW HAVE BEEN ISSUED TO THE INSURED NAMED ABOVE FOR THE POLICY PERIOD INDICATED. NOTWITHSTANDING ANY REQUIREMENT, TERM OR CONDITION OF ANY CONTRACT OR OTHER DOCUMENT WITH RESPECT TO WHICH THIS CERTIFICATE MAY BE ISSUED OR MAY PERTAIN, THE INSURANCE AFFORDED BY THE POLICIES DESCRIBED HEREIN IS SUBJECT TO ALL THE TERMS, EXCLUSIONS AND CONDITIONS OF SUCH POLICIES. LIMITS SHOWN MAY HAVE BEEN REDUCED BY PAID CLAIMS.

INSR LTR	TYPE OF INSURANCE	ADDL INSD	SUBR WVD	POLICY NUMBER	POLICY EFF (MM/DD/YYYY)	POLICY EXP (MM/DD/YYYY)	LIMITS	
A	X COMMERCIAL GENERAL LIABILITY CLAIMS-MADE X OCCUR X PD Ded: $500 GEN'L AGGREGATE LIMIT APPLIES PER: POLICY X PRO-JECT LOC OTHER:	X		Z75944	7/1/2024	7/1/2025	EACH OCCURRENCE DAMAGE TO RENTED PREMISES (Ea occurrence) MED EXP (Any one person) PERSONAL & ADV INJURY GENERAL AGGREGATE PRODUCTS - COMP/OP AGG	$ 1,000,000 $ 250,000 $ 10,000 $ 1,000,000 $ 3,000,000 $ 3,000,000
A	AUTOMOBILE LIABILITY X ANY AUTO OWNED AUTOS ONLY SCHEDULED AUTOS X HIRED AUTOS ONLY X NON-OWNED AUTOS ONLY			Z75944	7/1/2024	7/1/2025	COMBINED SINGLE LIMIT (Ea accident) BODILY INJURY (Per person) BODILY INJURY (Per accident) PROPERTY DAMAGE (Per accident)	$ 1,000,000 $ $ $
A	UMBRELLA LIAB X OCCUR X EXCESS LIAB CLAIMS-MADE DED X RETENTION $ 0			Z75944	7/1/2024	7/1/2025	EACH OCCURRENCE AGGREGATE	$ 2,000,000 $ 2,000,000
B	WORKERS COMPENSATION AND EMPLOYERS' LIABILITY ANY PROPRIETOR/PARTNER/EXECUTIVE OFFICER/MEMBER EXCLUDED? (Mandatory in NH) Y / N: Y If yes, describe under DESCRIPTION OF OPERATIONS below	N / A		0692	1/1/2024	1/1/2025	X PER STATUTE OTH-ER E.L. EACH ACCIDENT E.L. DISEASE - EA EMPLOYEE E.L. DISEASE - POLICY LIMIT	$ 2,000,000 $ 2,000,000 $ 2,000,000
A	Leased/Rented Eqpt			Z75944	7/1/2024	7/1/2025	Ded: $500 / Limit:	200,000

DESCRIPTION OF OPERATIONS / LOCATIONS / VEHICLES (ACORD 101, Additional Remarks Schedule, may be attached if more space is required)

.

SEE ATTACHED ACORD 101

CERTIFICATE HOLDER

City of Santa Fe
Wastewater Division
Attn: Stan Holland
73 Paseo Real
Santa Fe, NM 87507

CANCELLATION

SHOULD ANY OF THE ABOVE DESCRIBED POLICIES BE CANCELLED BEFORE THE EXPIRATION DATE THEREOF, NOTICE WILL BE DELIVERED IN ACCORDANCE WITH THE POLICY PROVISIONS.

AUTHORIZED REPRESENTATIVE



© 1988-2015 ACORD CORPORATION. All rights reserved.
The ACORD name and logo are registered marks of ACORD

AGENCY CUSTOMER ID: SUBSURF-01 DONISCHUK

LOC #: 1

ADDITIONAL REMARKS SCHEDULE

AGENCY	License # 0757776	NAMED INSURED
HUB International Insurance Services (SOW)		Sub Surface Contracting Inc 27A Paseo De River St Santa Fe, NM 87507
POLICY NUMBER		
SEE PAGE 1		
CARRIER	NAIC CODE	EFFECTIVE DATE: SEE PAGE 1
SEE PAGE 1	SEE P 1	

ADDITIONAL REMARKS

THIS ADDITIONAL REMARKS FORM IS A SCHEDULE TO ACORD FORM,

FORM NUMBER: ACORD 25 FORM TITLE: Certificate of Liability Insurance

Description of Operations/Locations/Vehicles:
Where required by written contract or agreement, the City of Santa Fe, Wastewater Division, City Representative, other parties reasonably requested in writing by the City of Santa Fe, and their officials, members, officers, employees, and agents are included as additional insured with respects to general liability, on a primary & non-contributory basis.

ACORD 101 (2008/01) © 2008 ACORD CORPORATION. All rights reserved.

The ACORD name and logo are registered marks of ACORD

ADDITIONAL INSURED - OWNERS, LESSEES OR CONTRACTORS - AUTOMATIC STATUS WHEN REQUIRED IN CONSTRUCTION AGREEMENT WITH YOU **CG-2033R(6-13)**

This endorsement modifies insurance provided under the following:

COMMERCIAL GENERAL LIABILITY COVERAGE PART

1. Section II - Who Is An Insured is amended to include as an additional insured:

a. Any person or organization for whom you are performing operations when you and such person or organization have agreed in writing in a contract or agreement that such person or organization be added as an additional insured on your policy; and

b. Any other person or organization you are required to add as an additional insured under the contract or agreement described in paragraph a above.

Such person or organization is an additional insured only with respect to liability for *bodily injury, property damage* or *personal and advertising injury* caused, in whole or in part, by:

a. Your acts or omissions; or

b. The acts or omissions of those acting on your behalf;

in the performance of your ongoing operations for the additional insured.

However the insurance afforded to such additional insured:

a. Only applies to the extent permitted by law; and

b. Will not be broader than that which you are required by the contract or agreement to provide for such additional insured.

A person's or organization's status as an additional insured under this endorsement ends when your operations for that additional insured are completed.

2. With respect to the insurance afforded these additional insureds, the following additional exclusions apply:

This insurance does not apply to:

a. *Bodily injury, property damage* or *personal and advertising injury* arising out of the rendering of, or the failure to render, any professional architectural, engineering or surveying services, including:

(1) The preparing, approving or failing to prepare or approve maps, shop drawings, opinions, reports, surveys, field orders, change orders or drawings and specifications; or

(2) Supervisory, inspection, architectural or engineering activities.

This exclusion applies even if the claims against any insured allege negligence or other wrongdoing in the supervision, hiring, employment, training or monitoring of others by that insured, if the *occurrence* which caused the *bodily injury* or *property damage* involved the rendering of or the failure to render any professional architectural, engineering or surveying services.

b. *Bodily injury* or *property damage* occurring after:

(1) All work, including materials, parts or equipment furnished in connection with such work, on the project (other than service, maintenance or repairs) to be performed by or on behalf of the additional insured(s) at the location of the covered operations has been completed; or

(2) That portion of *your work* out of which the injury or damage arises has been put to its intended use by any person or organization other than another contractor or subcontractor engaged in performing operations for a principal as a part of the same project.

3. With respect to the insurance afforded to these additional insureds, the following is added to Section III - Limits Of Insurance:

The most we will pay on behalf of the additional insured is the amount of insurance:

a. Required by the contract or agreement you have entered into with the additional insured; or

b. Available under the applicable Limits of Insurance shown in the Declarations;

whichever is less.

This endorsement shall not increase the applicable Limits of Insurance shown in the Declarations.

ADDITIONAL INSURED - COMPLETED OPERATIONS AUTOMATIC STATUS WHEN REQUIRED IN CONSTRUCTION AGREEMENT WITH YOU (OWNERS, LESSEES OR CONTRACTORS) **CG-7277(6-13)**

This endorsement modifies insurance provided under the following:

COMMERCIAL GENERAL LIABILITY COVERAGE PART

PRODUCTS-COMPLETED OPERATIONS LIABILITY COVERAGE FORM

1. Section II - Who Is An Insured is amended to include as an additional insured:

a. Any person(s) or organization(s) for whom you have performed operations if you and such person(s) or organization(s) have agreed in writing in a contract or agreement that such person(s) or organization(s) be added as additional insured on your policy for completed operations; and

b. Any other person(s) or organization(s) you are required to add as an additional insured under the contract or agreement described in paragraph a above.

Such person or organization is an additional insured only with respect to liability included in the *products-completed operations hazard* for *bodily injury* or *property damage* caused, in whole or in part, by *your work* performed for that additional insured at the location designated and described in the contract or agreement.

However:

a. The insurance afforded to such additional insured only applies to the extent permitted by law; and

b. If coverage provided to the additional insured is required by a contract or agreement, the insurance afforded to such additional insured will not be broader than that which you are required by the contract or agreement to provide for such additional insured.

2. This insurance does not apply to:

a. *Bodily injury* or *property damage* which occurs prior to the execution of the contract or agreement described in item 1; or

b. *Bodily injury* or *property damage* that occurs after the time period during which the contract or agreement described in item 1 requires you to add such person or organization onto your policy as an additional insured for completed operations; or

c. *Bodily injury* or *property damage* arising out of the rendering of, or the failure to render, any professional, architectural, engineering or surveying services, including:

(1) The preparing, approving or failing to prepare or approve maps, shop drawings, opinions, reports, surveys, field orders, change orders or drawings and specifications; or

(2) Supervisory, inspection, architectural or engineering activities.

This exclusion applies even if the claims against any insured allege negligence or other wrongdoing in the supervision, hiring, employment, training or monitoring of others by that insured, if the *occurrence* which caused the *bodily injury* or *property damage* involved the rendering of or the failure to render any professional services by or for you.

3. With respect to the insurance afforded to these additional insureds, the following is added to Section III - Limits Of Insurance:

If coverage provided to the additional insured is required by a contract or agreement, the most we will pay on behalf of the additional insured is the amount of insurance:

a. Required by the contract or agreement; or

b. Available under the applicable Limits of Insurance shown in the Declarations;

whichever is less.

This endorsement shall not increase the applicable Limits of Insurance shown in the Declarations.

PRIMARY AND NONCONTRIBUTORY - OTHER INSURANCE CONDITION **CG-2001R(4-13)**

This endorsement modifies insurance provided under the following:

COMMERCIAL GENERAL LIABILITY COVERAGE PART

PRODUCTS-COMPLETED OPERATIONS LIABILITY COVERAGE FORM

RESIDENTIAL CARE FACILITY LIABILITY COVERAGE PART

The following is added to the Other Insurance Condition and supersedes any provision to the contrary:

Primary And Noncontributory Insurance

This insurance is primary to and will not seek contribution from any other insurance available to an additional insured under your policy provided that:

(1) The additional insured is a Named Insured under such other insurance; and

(2) You have agreed in writing in a contract or agreement that this insurance would be primary and would not seek contribution from any other insurance available to the additional insured.

GB SUB SURFACE AMEND 1_NEW MEMO PACKET int 2 final

Interim Agreement Report 2024-10-30

Created:	2024-10-25
By:	JIMMY TAPIA (jptapia@santafenm.gov)
Status:	Out for Signature
Transaction ID:	CBJCHBCAABAAdcv38BSKQC23atXsPE3YQSMr3lTaWxbX

Agreement History

Agreement history is the list of the events that have impacted the status of the agreement prior to the final signature. A final audit report will be generated when the agreement is complete.

"GB SUB SURFACE AMEND 1_NEW MEMO PACKET int 2 final" History

Document created by JIMMY TAPIA (jptapia@santafenm.gov)
2024-10-25 - 5:35:10 PM GMT- IP address: 63.232.20.2

Document emailed to ajhopkins@santafenm.gov ajhopkins@santafenm.gov (ajhopkins@santafenm.gov) for signature
2024-10-25 - 5:40:41 PM GMT

Email viewed by ajhopkins@santafenm.gov ajhopkins@santafenm.gov (ajhopkins@santafenm.gov)
2024-10-25 - 5:47:56 PM GMT- IP address: 104.47.65.254

Document e-signed by ajhopkins@santafenm.gov ajhopkins@santafenm.gov (ajhopkins@santafenm.gov)
Signature Date: 2024-10-25 - 5:48:16 PM GMT - Time Source: server- IP address: 63.232.20.2

Document sent to JoAnn Lovato (jdlovato@santafenm.gov) and Travis Dutton-Leyda (tkduttonleyda@santafenm.gov) for signature. One of them to sign
2024-10-25 - 5:48:19 PM GMT

Email viewed by Travis Dutton-Leyda (tkduttonleyda@santafenm.gov)
2024-10-25 - 6:53:06 PM GMT- IP address: 63.232.20.2

Email viewed by JoAnn Lovato (jdlovato@santafenm.gov)
2024-10-25 - 9:59:25 PM GMT- IP address: 73.228.7.52

Document e-signed by JoAnn Lovato (jdlovato@santafenm.gov)
Signature Date: 2024-10-25 - 10:01:24 PM GMT - Time Source: server- IP address: 73.228.7.52

Powered by Adobe Acrobat Sign

Document emailed to EMILY OSTER (ekoster@santafenm.gov) for signature

2024-10-25 - 10:01:28 PM GMT

Email viewed by EMILY OSTER (ekoster@santafenm.gov)

2024-10-30 - 3:21:58 PM GMT- IP address: 104.47.64.254

Document e-signed by EMILY OSTER (ekoster@santafenm.gov)

Signature Date: 2024-10-30 - 3:23:30 PM GMT - Time Source: server- IP address: 63.232.20.2

Document emailed to JOHN BLAIR (jwblair@santafenm.gov) for signature

2024-10-30 - 3:23:33 PM GMT

CITY OF SANTA FE

Date: October 21, 2024

To: Mayor Alan Webber and Governing Body October 30, 2024
Finance Committee October 28, 2024
Public Works & Public Utilities October 21, 2024

Via: John Dupuis, Public Utilities Department Director JD
Debora Trujillo, Interim Division Director DT

From: Lawrence Garcia, Environmental Services Fleet Manager LG

Subject: Closed Landfill Management

Vendor Name: INTERA Inc.

Vendor Number: 1038

ITEM AND ISSUE:
Public Utilities Department respectfully requests Request your review and approval of Amendment #2 to provide Regulatory Groundwater Monitoring, Soil Vapor Monitoring and other Environmental and Engineering Services for Frank Ortiz Park Landfill in the total additional amount of $229,132.72, for a total Contract amount of $528,621.73. Lawrence Garcia lmgarcia@santafenm.gov, (505) 955-2241.

Public Utilities Department respectfully request approval of a Budget Increase to the Environmental Services Division Enterprise Fund, from Fund 510 Cash Balance, in the total amount of 229,134. This increase is to satisfy regulatory requirements mandated by New Mexico Environment Division for Frank Ortiz Park closed landfill.

The City of Santa Fe entered a contract with INTERA Inc on September 25, 2023, via the utilization of a competitively bid contract by the City of Albuquerque, RFB #RFB-2022-322-DSW-CG which was awarded on February 1, 2023, contract #SHR000022790-Item # 23-0578 and expires on 1/31/2027. The City of Santa Fe is in the final stages of releasing an RFP for this type of work. By regulations the City must continue required monitoring and reporting to the State Regulators.

BACKGROUND AND SUMMARY:
The City of Santa Fe owns to two closed landfills. The Paseo de Vistas Landfill closed under the federal Resource Conservation and Recovery Act (RCRA) in the 1990's and is overseen by the NMED Solid Waste Bureau (SWB) according to its' Landfill Closure Plan filed by the city. The Frank Ortiz disposal site was closed before the Paseo landfill and is now the Frank Ortiz Dog Park. It is not regulated under RCRA and is overseen by the NMED Ground Water Bureau (GWQB) because closure occurred prior to the implementation

of the NMED solid waste regulations for landfill closure. Both sites must comply with the required quarterly and semi-annual monitoring, as specified by their closure plans.

The City of Santa Fe received notice from (NMED), (GWQB), of requirements in accordance with subsection 411.B of the New Mexico Ground and Surface Water Protection Regulations (20.6.2), and are requiring a modification to the current State 1 Abatement Plan, to include ascertain of potential vapor pathways exist, expansion of up-gradient well monitoring, expand on dioxane tested, and installation of one additional ground water well down gradient, to include both water and gases.

PROCUREMENT METHOD:
The procurement method was via the City of Albuquerque Procurement Contract #SHR000022790 which was approved on February 1, 2023. The Contractor has agreed to afford the City of Santa Fe the same term and conditions.

Chief Procurment Officer Approval: _____ Date: Oct 24, 2024

CONTRACT NUMBER:
The FY25 Munis contract number is 3204358

Fund Name/Number: Environmental Services Enterprise Fund 510
Munis Org Name/Number: Admin/Operations 5100331
Munis Object Name/Number: Professional Contracts /510300

Budget Officer Approval: *Andy Hopkins* Date: Oct 23, 2024
Comment/Exceptions: _____

Grant ☐Yes | ☒ No

Grant #: *N/A*

Grant Manager/Accounting Officer Approval: N/A Date:
Comment/Exceptions: _____

Project ☐Yes | ☒ No

Project Ledger #: N/A

CAPITAL ASSET (will this procurement result in a tangible item that costs more than $5,000
☐Yes | ☒ No

Asset # (if known): N/a

Repair or Replacement of Existing Equipment:

☐Yes | ☒ No
~If yes -> ☐Repair | ☐ Replacement

Please explain: N/A

Capital Project:
(New and improvement projects that are going to cost $10,000 or more)
☐ **Yes** | ☒ **No**

Anticipated length of project: N/A

Asset Manager Approval: N/A **Date:**
Comment/Exceptions:

Was this service deemed construction: ☐ **Yes** | ☒ **No**
~If yes, does this expenditure exceed $25,000? ☐ **Yes** | ☐ **No**
~If yes, did you obtain the appropriate bond? ☐ **Yes** | ☐ **No**
~Performance and Payment & Labor - NMSA 1978, Section 13-4-18

Department Approvals:
IT Components: ☐ **Yes** | ☒ **No**
Vehicles: ☐ **Yes** | ☒ **No**
Facilities, Furniture, Fixtures, Equipment: ☐ **Yes** | ☒ **No**

Approval: **Title:** **Date:**
Approval: **Title:** **Date:**
Comment & Exceptions:

Department Contract Administrator Contact Info:

ATTACHMENTS:
Vendor's Quote
Santa Fe Business License – No longer needed for contracts/purchases (delete this line)
Certificate of Liability Insurance
Bar Request
Amendment 1
Primary Contract Item 23-0578
Vendor Letter assuring price match

Item#
Munis Contract #3204358
Original Contract Item# 23-0578
SWPA/GSA/Coop/RFP/ITB #: SHR.000022790

CITY OF SANTA FE
AMENDMENT No.2 TO
PROFESSIONAL SERVICES CONTRACT
ITEM#23-0578

This AMENDMENT No 2. (the "Amendment") amends the CITY OF SANTA FE PROFESSIONAL SERVICES CONTRACT, dated September 25, 2023, (the "Contract"), between the City of Santa Fe (the "City") and INTERA Inc. (the "Contractor"). The date of this Amendment shall be the date when it is executed by the City and the Contractor

whichever occurs last.

RECITALS:

A. Under the terms of the Contract, Contractor has agreed to provide the Ground Water Monitoring, Vapor Monitoring, Other Environmental and Engineering Services and Reporting for two City of Santa Fe closed landfills.

B. Pursuant to Article 14 of the Contract, and for good and valuable consideration, the receipt and sufficiency of which are acknowledged by the parties, the City and the Contractor agree as follows:

1. COMPENSATION.

Article 3, paragraph A of the original Contract is amended to increase the amount of compensation by a total of two hundred twenty-nine thousand one hundred thirty-two dollars and seventy-two cents ($229,132.72) so that Article 3, paragraph A reads in its entirety as follows:

A. The City shall pay the Contractor in full payment for services satisfactorily performed as described in Exhibit "A" of the contract. The total amount payable to the contractor under this Agreement, including gross

receipts tax and expenses, shall not exceed five hundred twenty-eight thousand six hundred twenty-one dollars and seventy-three cents ($528,621.73). This amount is a maximum and not a guarantee that the work assigned to be performed by the Contractor under this Agreement shall equal the amount stated herein. The parties do not intend for the Contractor to continue to provide services without compensation when the total compensation amount is reached. Contractor is responsible for notifying the city when the services provided under this Agreement reach the total compensation amount. In no event will the Contractor be paid for services provided in excess of the total compensation amount without this Agreement being amended in writing prior to those services in excess of the total compensation amount being provided.

2. CONTRACT IN FULL FORCE.

Except as specifically provided in this Amendment, the Contract remains and shall remain in full force and effect, in accordance with its terms.

IN WITNESS WHEREOF, the parties have executed this Amendment No.2 to the Contract as of the dates set forth below.

CITY OF SANTA FE:

_____
ALLAN WEBBER, CITY MAYOR

DATE:_____

CONTRACTOR:
Intera Incorporated

Joseph Tracy
_____
Joseph Tracy, Vice President

DATE: Oct 8, 2024

CRS# 74-3010638

Registration #=227829

ATTEST:

_____
GERALYN CARDENAS, INTERIM CITY CLERK

CITY ATTORNEY'S OFFICE:

Marcos Martinez
Marcos Martinez (Oct 8, 2024 16:41 MDT)
SENIOR ASSISTANT CITY ATTORNEY

APPROVED FOR FINANCES:

Emily K. Oster
_____

EMILY OSTER, FINANCE DIRECTOR

Log # {Finance use only}:	
Journal # {Finance use only}:	

City of Santa Fe, New Mexico
BUDGET AMENDMENT RESOLUTION (BAR)

DEPARTMENT / DIVISION NAME	DATE
Public Utilities/Environmental Services	10/21/2024

ITEM DESCRIPTION	ORG	OBJECT	PROJECT	INCREASE	DECREASE
EXPENDITURES				{enter as positive #}	{enter as negative #}
Professional Contracts	5100331	510300		229,134	
REVENUES				{enter as negative #}	{enter as positive #}
				$ 229,134	$ -

JUSTIFICATION: *(use additional page if needed)*
--Attach supporting documentation/memo

Budget Increase from Fund 510 Cash Balances: Enviommental Services Division Enterprise Fund.

See attached memo for additional information.

{Complete section below if BAR results in a net change to ANY Fund}	
Fund(s) Affected	Fund Balance Increase/(Decrease)
510 Cash Balance	
TOTAL:	(229,134)

Lawrence Garcia — 9/23/2024
Prepared By {print name} — Date

DEBORA TRUJILLO (Sep 25, 2024 09:54 MDT) — Sep 25, 2024
Division Director Signature {optional} — Date

John Dupuis (Sep 26, 2024 20:00 MDT) — Sep 26, 2024
Department Director Signature — Date

{Use this form for Finance Committee/ City Council agenda items ONLY}

CITY COUNCIL APPROVAL

City Council Approval Date:

Agenda Item #:

Andy Hopkins — Oct 23, 2024
Budget Officer — Date

Emily K. Oster — Oct 24, 2024
Finance Director {≤ $5,000} — Date

City Manager {≤ $60,000} — Date

Via Email

May 31, 2024

Sandra Gabaldon
Environmental Compliance Specialist
City of Santa Fe
801 West San Mateo Road
Santa Fe, New Mexico 87504
sgabaldon@santafenm.gov

Re: Modification to Stage 1 Abatement Plan Required, Former Frank Ortiz Landfill, City of Santa Fe, New Mexico

Dear Sandra Gabaldon,

In accordance with Subsection 4111.B of the New Mexico Ground and Surface Water Protection Regulations (20.6.2 NMAC), this letter is to inform you the New Mexico Environment Department (NMED) Ground Water Quality Bureau (GWQB) requires modification to the current Stage 1 Abatement Plan (S1AP) for the aforementioned property (Site). On May 30, 2024, GWQB met with the City of Santa Fe (COSF) to review the ongoing abatement progress at the Site. At the meeting, NMED GWQB and the COSF revisited several outstanding components with respect to Site characterization and determined modification to the current Site S1AP is the best path forward to address the data gaps.

Please submit a modified Site S1AP proposal and associated implementation schedule within 120 days of the date of this correspondence that incorporates the following elements in support of ongoing Site characterization:

1. Continuance of quarterly Site surface emission monitoring (SEM) in accordance with the NMED-conditionally approved S1AP SEM modification proposal, dated October 25, 2021, until a minimum of 8 consecutive SEM events are complete. On completion, the COSF shall provide an SEM completion report documenting conclusions and recommendations, as appropriate, for a long-term SEM program at the Site.
2. Due diligence to ascertain whether a potential vapor intrusion (VI) pathway exists for the two nearest residential properties located approximately 180 feet east of the Site. At a minimum, this task should include a review of available building and utility specifications and a field reconnaissance to identify any Site-specific structure or feature that may impede or redirect the natural upward diffusion of Site vapors toward the properties of interest.
3. Installation, development, and sampling of groundwater and soil vapor monitoring points north and east of current locations SV-03 and SV-05/Ortiz Park-3 to quantify downgradient impacts, if any, of the landfill waste mass on these media.
4. Expansion of the routine Site-wide groundwater monitoring and reporting program to include one or more groundwater wells associated with the upgradient COSF Paseo de Vista Landfill for all Site constituents of concern.

5. Completion of a single Site-wide groundwater sampling event to determine the presence or absence (no detection) of one or more emergent contaminants commonly associated with landfills, specifically per-and polyfluoroalkyl substances and 1,4-Dioxane. (Note: this special sampling event must include groundwater wells referenced in tasks 3 and 4 above).
6. A corrective action plan to address the stormwater issues that appear to seasonally impact portions of the Site south and east of the abandoned PVD-1/MW-1 location to minimize water infiltration in this area. This area is proximal to the dominant buried waste mass, where wet conditions may locally foster accelerated methane generation and contaminant leaching.
7. Continuance of an appropriate comprehensive Site subsurface soil gas and landfill gas monitoring program.
8. Updated reporting schedule for both routine and key progress deliverables, adjusted to include the additional S1AP elements referenced herein.

If you have questions concerning this correspondence, please contact Kate Herrell at 505-670-1796 or kate.herrell@env.nm.gov or ros.general@env.nm.gov.

Sincerely,

Justin Ball

Digitally signed by Justin Ball
Date: 2024.05.31 11:49:52 -06'00'

Justin Ball, Chief
Ground Water Quality Bureau

cc: Joe Tracy, INTERA, jtracy@intera.com
George Schuman, NMED GWQB ROS
Paul Chamberlain, NMED GWQB ROS-SCP
Kate Herrell, NMED GWQB ROS-SCP
ROS Reading File

INTERA Incorporated
2440 Louisiana Blvd. NE, Suite 700
Albuquerque, NM 87110
+1 (505) 246 1600
INTERA.com

September 5, 2024

Sandra Gabaldon
Environmental Compliance Specialist
City of Santa Fe
801 West San Mateo Road
Santa Fe, New Mexico 87504

RE: Modification to Stage 1 Abatement Plan Proposal and Cost Estimate, Former Frank Ortiz Landfill, City of Santa Fe, New Mexico

Dear Ms. Sandra Gabaldon,

INTERA Incorporated (INTERA) is pleased to provide this proposal and cost estimate to the City of Santa Fe (COSF) to modify the Stage 1 Abatement Plan (S1AP) for the Former Frank Ortiz Landfill (Site) as requested by the New Mexico Environment Department (NMED) Groundwater Quality Bureau (GWQB) on May 31, 2024 (NMED, 2024). NMED GWQB representatives and met with the COSF and INTERA to review the ongoing abatement progress at the Site and modification to the current Site S1AP was determined to be the best path forward to address the data gaps. The proposed modifications requested by NMED GWQB includes the following eight (8) tasks in support of ongoing Site monitoring:

1. Continuance of quarterly Site surface emission monitoring (SEM) in accordance with the NMED-conditionally approved S1AP SEM modification proposal, dated October 25, 2021, until a minimum of 8 consecutive SEM events are complete. On completion, the COSF shall provide an SEM completion report documenting conclusions and recommendations, as appropriate, for the long-term SEM program at the Site.

2. Due diligence to ascertain whether a potential vapor intrusion (VI) pathway exists for the two nearest residential properties located approximately 180 feet east of the Site. At a minimum, this task should include a review of available building and utility specifications and a field reconnaissance to identify any Site-specific structure or feature that may impede or redirect the natural upward diffusion of Site vapors toward the properties of interest.

3. Installation, development, and sampling of groundwater and soil vapor monitoring points north and east of current locations SV-03 and SV-05/Ortiz Park-3 to quantify downgradient impacts, if any, of the landfill waste mass on these media.

4. Expansion of the routine Site-wide groundwater monitoring and reporting program to include one or more of the existing groundwater monitoring wells associated with the COSF Paseo de Vista Landfill for all Site constituents of concern.

5. Completion of a single Site-wide groundwater sampling event to determine the presence or absence (no detection) of one or more emergent contaminants commonly associated with landfills, specifically per-and polyfluoroalkyl substances (PFAS) and 1,4-Dioxane. (Note: this special sampling event must include the groundwater wells referenced in tasks 3 and 4 above).

6. A corrective action plan to address the stormwater issues that appear to seasonally impact portions of the Site south and east of the abandoned PVD-1/MW-1 location to minimize water infiltration in this area. This area is proximal to the dominant buried waste mass, where wet conditions may locally foster accelerated methane generation and contaminant leaching.

7. Continuance of an appropriate comprehensive Site subsurface soil gas and landfill gas monitoring program.

8. Updated reporting schedule for both routine and key progress deliverables, adjusted to include the additional S1AP elements referenced herein.

Scope of Services

The following sections describe how each Task above will be addressed in the proposed S1AP Modification.

Task 1- SEM Completion and Reporting

Site SEM activities are currently ongoing. Once 8 consecutive SEM events are complete, INTERA will provide a SEM completion report to the COSF documenting conclusions and recommendations, as appropriate, for a long-term SEM program at the Site.

Task 2- Vapor Intrusion Pathway Investigation

To determine whether a potential VI pathway exists for the two residential properties of interest (**Figure 1**), INTERA will perform a document review and field reconnaissance and present the findings in a future Site monitoring report. The document review will consist of (1) obtaining and reviewing public building plans and/or construction plans for the two residential properties of interest to look for information on their subsurface design (e.g., basements, crawl space, slab-on-grade construction) and (2) obtaining and reviewing utility layouts (e.g., water, sewer, and electrical) and identifying any utility corridors that might act as preferential pathways for vapor migration. The field reconnaissance will consist of a walking survey of the Site near the residential properties and surrounding area, documenting any site-specific structures or features that may impede or redirect vapor diffusion (e.g., retaining walls, large underground utilities, impermeable surfaces). If warranted, New Mexico One-Call may be contacted to mark the underground utilities in the vicinity of the residential properties.

Findings will be compiled and presented in a future Site monitoring report. The findings presented will include a utility map or schematics, photographs from the field reconnaissance and any other relevant data.

Task 3- Dual Purpose Soil Vapor/Groundwater Monitoring Well Installation

Task 3, the installation of one (1) dual purpose groundwater monitoring/soil vapor monitoring well, includes the following subtasks, which are described in detail below:

- Task 3a- Project Planning
- Task 3b- Soil boring advancement
- Task 3c- Groundwater and soil vapor monitoring well installation
- Task 3d- Monitoring well survey

Task 3a – Project Planning

The first subtask of Task 3 is project planning and will include the following:

- Apply for a well permit from the New Mexico Office of the State Engineer (OSE).
- Execute subcontractor agreements for a licensed well driller, a surveyor, and an investigation-derived waste (IDW) disposal company.
- Contact New Mexico One Call to mark utility locations
- Contact Ms. Kate Herrell, NMED GWQB Project Manager to provide her with INTERA's schedule for performing investigation activities.
- Update the existing Site-Specific Health and Safety Plan (SSHASP), which will be reviewed and approved by the INTERA health and safety officer prior to performing field activities and will be available on-site during performance of all field activities.
- Schedule INTERA resources, such as a geologist, an environmental scientist, or an engineer to oversee and/or perform field activities and reporting.
- Secure field equipment from the INTERA equipment pool or from an outside vendor.

Task 3b- Soil Boring Advancement

One soil boring will be advanced at the Site and will be completed as dual-purpose groundwater/soil vapor monitoring well north and east of current locations SV-03 and SV-05/Ortiz Park-3 to quantify downgradient impacts, if any, of the landfill waste mass on these media. The proposed location of this monitoring well is illustrated in **Figure 2.**

Drilling will be completed using Rotosonic drilling techniques. A carbide button drilling bit will be used in conjunction with Rotosonic drilling methods and advanced with an 8-in outer diameter (OD) overshot casing and 6-in core barrel to a maximum depth of approximately 375 feet below ground surface (ft bgs).

All recovered soil shall be classified according to the Unified Soil Classification System (USCS) and in accordance with ASTM International (ASTM) Standard D 2488–17, *Standard Practice for Description and Identification of Soils (Visual-Manual Procedure)* (ASTM, 2017).

Soil samples will be screened for the presence of VOCs using a photoionization detector (PID) equipped with a 10.6-electron volt lamp in accordance with INTERA's soil field screening SOP (INTERA, 2015b). PID readings will be recorded on the soil boring log.

Two soil samples will be collected from the soil boring. One sample will be collected from just below the total depth of the waste, and one collected at the water table interface per INTERA soil sampling SOP (INTERA, 2016b). The soil samples will be analyzed for the following:

- VOCs via United States Environmental Protection Agency (EPA) Method 8260B (using methanol extraction);
- Semi-Volatile Organic Compounds (SVOCs), which will include polynuclear aromatic hydrocarbons (PAHs) via EPA Method 8270 (selective ion monitoring [SIM]);
- NMED-designated metals (i.e., arsenic, barium, cadmium, chromium, lead, selenium, silver, uranium, copper, iron, manganese, zinc, aluminum, boron, cobalt, molybdenum, and nickel) by either EPA Method 6010C or 6020 and Mercury by 7470/7471/245.2;
- Polychlorinated biphenyls (PCBs) by EPA Method 8082 (SIM); and,
- Nitrate/nitrite by EPA Method 300.0 and ammonia and total Kjeldhal nitrogen by Standard Method (SM) 4500.

The anticipated investigation derived waste (IDW) generated as part of this task includes drill cuttings, decontamination water generated during drilling activities, disposable personal protective equipment, and miscellaneous waste. IDW will be containerized and is proposed to be disposed of as non-hazardous waste. One representative IDW soil sample will be collected and analyzed for the following:

- VOCs by EPA Method 8260;
- TCLP eight RCRA Metals (As, Ba, Cd, Cr, Pb, Hg, Se, Ag);
- Total Petroleum Hydrocarbons (TPH) Motor Oil Range Organics (MRO)/Diesel Range Organics (DRO)/Gasoline Range Organics (GRO) by EPA Method 8015B;
- Paint Filter Test; and,
- Reactivity, Ignitability, and Corrosivity (RCI).

If analytical results indicate that the IDW is hazardous waste, this will result in potential additional disposal expenses may be necessary and, if so, INTERA will prepare a change order for review/approval by the COSF.

Disposable PPE (disposable nitrile gloves) and miscellaneous waste (paper towels, plastic sheeting, etc.) will be containerized in plastic bags, sealed, and disposed of as municipal solid waste by INTERA. All re-used sampling equipment will be decontaminated per INTERA's equipment decontamination SOP (INTERA, 2016a).

Task 3c- Monitoring Well Installation

The soil boring will be completed as a groundwater monitoring well coupled with permanent soil vapor sampling ports (one shallow, one intermediate, and one deep). To be consistent with the other three on-site soil vapor monitoring wells, the shallow, intermediate, and deep vapor sampling ports will be installed at approximately 10, 30, and 40 ft bgs. The newly installed monitoring wells will be developed immediately after installation per INTERA's well development SOP (INTERA, 2015c). Development water will be containerized in 55-gallon drums and this liquid IDW will be analyzed (see Task 3b above).

The soil boring will be completed as a 4-inch diameter monitoring well, constructed of 4-inch diameter, flush-threaded, schedule 80 PVC, with 30 feet of 0.020-inch slot screen (10 ft below the water table and 20 ft above the water table) and blank casing to the ground surface, following the INTERA monitoring well installation SOP (INTERA, 2015a). The total depth of the proposed monitoring well will be approximately 370 ft bgs based on historic groundwater levels observed in monitoring well Ortiz Park-1. The monitoring well annulus will be backfilled with 10/20 silica sand (filter pack) to approximately 2 ft above the top of the monitoring well screen. At least 5 ft of hydrated bentonite clay chips will be placed above the sand pack. Neat cement grout (95% cement and 5% bentonite powder) will be placed above the bentonite seal to approximately 3 ft below the deepest soil vapor port (50 ft bgs). Each soil vapor port will have 2 ft of 10/20 silica sand placed above and below the soil vapor port. Hydrated bentonite clay granules or ⅜-inch bentonite chips will be placed between the sand packs of each soil vapor port/soil vapor screen interval to form an annular seal between soil vapor wells and will extend from the top of the sand pack associated with the shallow soil vapor port to 3 ft bgs. Hydration of the bentonite will be limited to make certain the soil vapor well screen intervals and surrounding filter pack are not saturated with water. The remaining monitoring well annulus (3 ft bgs to surface) and surface pad will be completed with cement. The monitoring well will be completed with an above-ground, sloped, circular concrete pad and a protective metal standpipe with locking cover.

The soil vapor monitoring well will be constructed as follows. Each soil vapor port will be connected to ¼-inch OD (0.21–inch inner diameter [ID]) stainless steel tubing that will be installed to just above the ground surface. The ¼-inch tubing shall be connected to a compression fitting using a ¼-inch female National Pipe Thread (NPT) connector. A ¼-inch male NPT-valve quick-connect coupler shall then be attached to the ¼-inch female NPT connector. A ¼-inch hose barb non-valve elbow quick-connect can then be attached to the quick-connect coupler to open communication to the soil-vapor port at depth.

Task 3d- Monitoring Well Survey

A survey of the new monitoring well will be completed after the monitoring well installation is completed. The monitoring well will be located vertically to the nearest 0.01 foot relative to NAVD 88. The horizontal location of the monitoring wells will be surveyed to the nearest 0.1 foot using NAD 83 and either the State Plane or Latitude-Longitude coordinate system. Morris Surveying of Santa Fe, New Mexico will provide surveying services.

Task 4- Expansion of GWM Program

To expand the routine Site-wide groundwater monitoring program to include one or more groundwater wells associated with the upgradient COSF Paseo de Vista Landfill (Paseo), INTERA will work with Parkhill (INTERA subcontractor) at Paseo and collect split samples during monitoring events or will collect samples from the Paseo monitoring wells independently. INTERA proposes to collect groundwater samples from three (3) upgradient monitoring wells (MW-2, MW-7 and MW-8) (**Figure 3**). Monitoring

well MW-2 is located upgradient of both the Paseo and Frank Ortiz Landfills, and monitoring wells MW-7 and MW-8 are located downgradient of Paseo but upgradient of the Site. The groundwater samples will be analyzed for the same analyses as the Site groundwater samples. Analytes are listed in the revised SAP/QAPP (INTERA, 2019).

Task 5- Single PFAS GWM Event

Task 5 includes completion of a single, Site-wide groundwater monitoring event to determine the presence or absence of PFAS and 1,4-Dioxane. This event will occur when the new groundwater well described in Task 3 has been installed and will include the three Paseo groundwater wells described in Task 4. It is estimated that eight (8) monitoring wells will be sampled to complete this task and will occur during a regularly scheduled semi-annual groundwater monitoring event. Monitoring wells will be sampled following procedures in described in the revised SAP/QAPP (INTERA, 2019) and PFAS and 1, 4-Dioxane will be added to the analytical suite listed in the SAP/QAPP. One field blank and one equipment blank will be collected for quality assurance purposes and analyzed for PFAS.

Prior to the commencement of this GWM event, INTERA will identify what type of dedicated pumps are installed in Paseo monitoring wells and determine if there are PFAS containing components present. Since the pumps are dedicated, the pumps may have to removed and sample collection methods modified if PFAS-containing equipment is suspected.

The State of New Mexico currently does not have a published PFAS Sampling Guidance so INTERA will follow the PFAS sampling procedures recommended by the United States Environmental Protection Agency (USEPA): the Michigan Department of Environmental Quality (MDEQ) Groundwater PFAS Sampling Guidance (MDEQ, 2018) and the Michigan Department of Environment, Great Lakes, and Energy (MDEGLE) General PFAS Sampling Guidance (MDEGLE, 2024).

Task 6- Stormwater Corrective Action Plan

Task 6 involves developing a Corrective Action Plan to address the stormwater issues (e.g., ponding) that impact portions of the Site south and east of the abandoned PVD-1/MW-1 location. The Corrective Action Plan will include a thorough site assessment, strategic design to reduce ponding water and infiltration, implementation of the design, and maintenance, as needed. The Site inspection will be performed to identify areas with standing water and understand the topography and existing drainages. Photographs will be collected concurrently with a scheduled upcoming landfill gas and/or groundwater monitoring event. INTERA recommends completing a topographic survey to create an accurate map of the Site's topography, highlighting the natural slope, depressions, and/or high points. This detailed mapping will allow project engineers to design a drainage system that is tailored to the specific conditions of the Site and helps in the strategic placement of swale, berms, or other drainage features to maximize their effectiveness. It is anticipated that Civil 3D Software will be used for the design process and INTERA's experience working at other landfills with similar issues will aid in designing practical and realistic options.

A Corrective Action Plan summarizing the findings and proposed solutions will be developed and submitted to the COSF.

Task 7- Continuing Soil Gas and Landfill Gas Monitoring

Continuance of the comprehensive Site subsurface soil gas and landfill gas monitoring will occur. No further action is necessary for Task 7.

Task 8- Updating Schedule

Task 8 includes submitting an updated reporting schedule that includes the additional tasks described above.

Cost Estimate

The cost estimate for Tasks 1 through 8 is provided in **Table 1.** Invoices will be sent on a monthly basis following the COSF formal notice to proceed. The COSF will be notified of any conditions requiring a change in the budget estimate as soon as such conditions become evident, should they arise.

References

ASTM International (ASTM), 2017. ASTM Standard D 2488–17, *Standard Practice for Description and Identification of Soils (Visual-Manual Procedure).* West Conshohocken, PA.

INTERA Incorporated (INTERA), 2015a. *Standard Operating Procedure 7, Monitor Well Installation.* February.

———, 2015b. *Standard Operating Procedure 23, Soil Field Screening.* February.

———, 2015c. *Standard Operating Procedure 9, Monitor Well Gauging.* March.

———, 2015d. *Standard Operating Procedure 10, Monitor Well Groundwater Sampling.* October.

———, 2015e. *Standard Operating Procedure 8, Monitor Well Development.* October.

———, 2016a. *Standard Operating Procedure 2, Decontamination.* May.

———, 2016b. *Standard Operating Procedure 13, Soil Sampling.* November.

_____, 2019. Sampling and Analysis and Quality Assurance Project Plan, Waste and Vadose Zone Characterization, Revision 3.0; Former Frank Ortiz Landfill, Santa Fe, Santa Fe County, New Mexico Prepared for New Mexico Environment Department on behalf of City of Santa Fe. November 6.

Michigan Department of Environmental Quality (MDEQ), 2018. Groundwater PFAS Sampling Guidance. October.

Michigan Department of Environment, Great Lakes, and Energy (MEGLE), 2024. General PFAS Sampling Guidance. January.

Sincerely,

INTERA Incorporated

Joseph Tracy, PG
Vice President

Enclosures

Figures 1, 2 and 3

Table 1 – Cost Estimate with Supporting Documentation

Figures

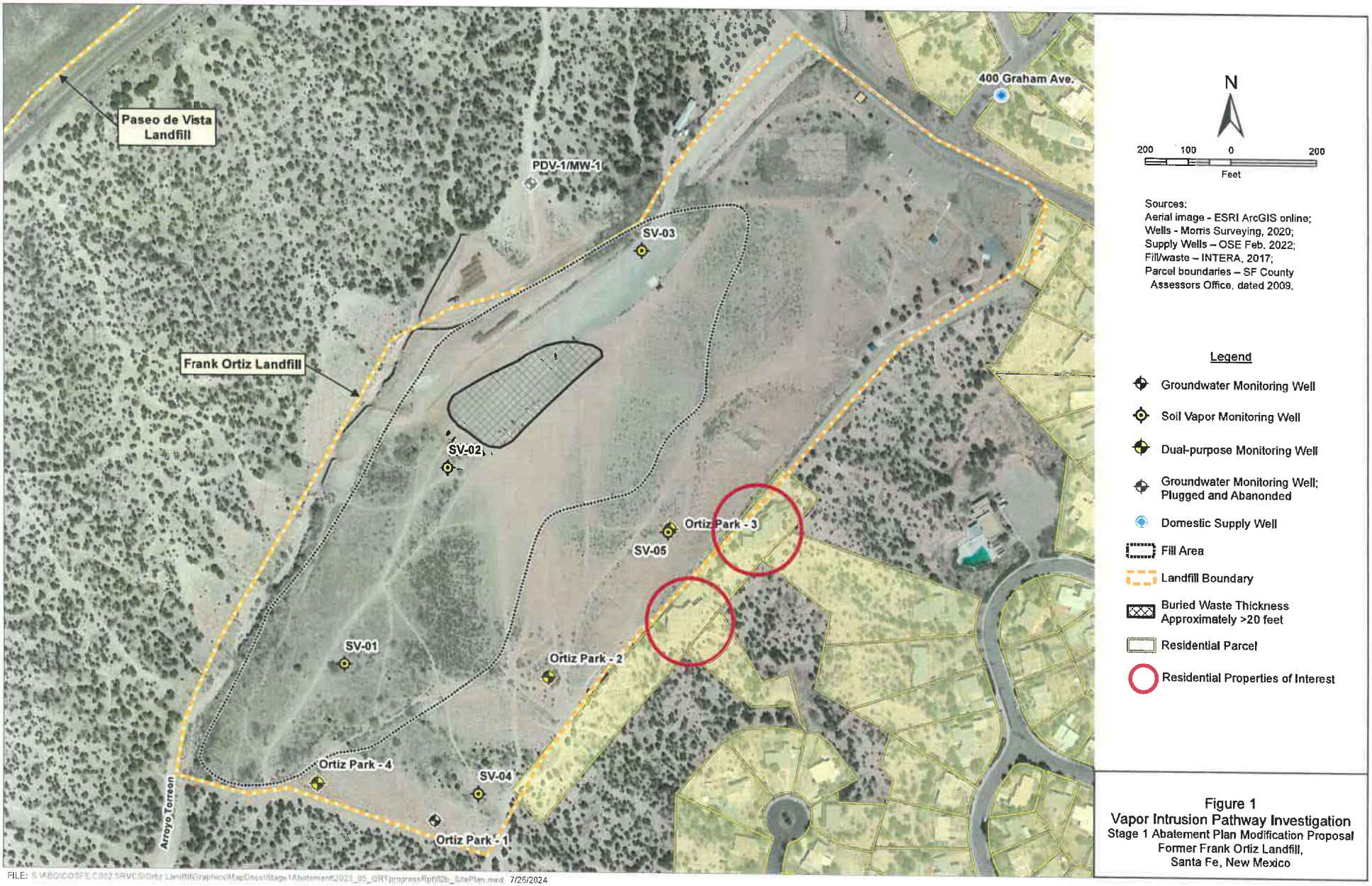

FILE: S:\ABQ\COSFE.C002.SRVC\SI\Ortiz Landfill\Graphics\MapDocs\Stage1Abatement\2023_05_QRTprogressRpt\02b_SitePlan.mxd 7/26/2024

Figure 1
Vapor Intrusion Pathway Investigation
Stage 1 Abatement Plan Modification Proposal
Former Frank Ortiz Landfill,
Santa Fe, New Mexico

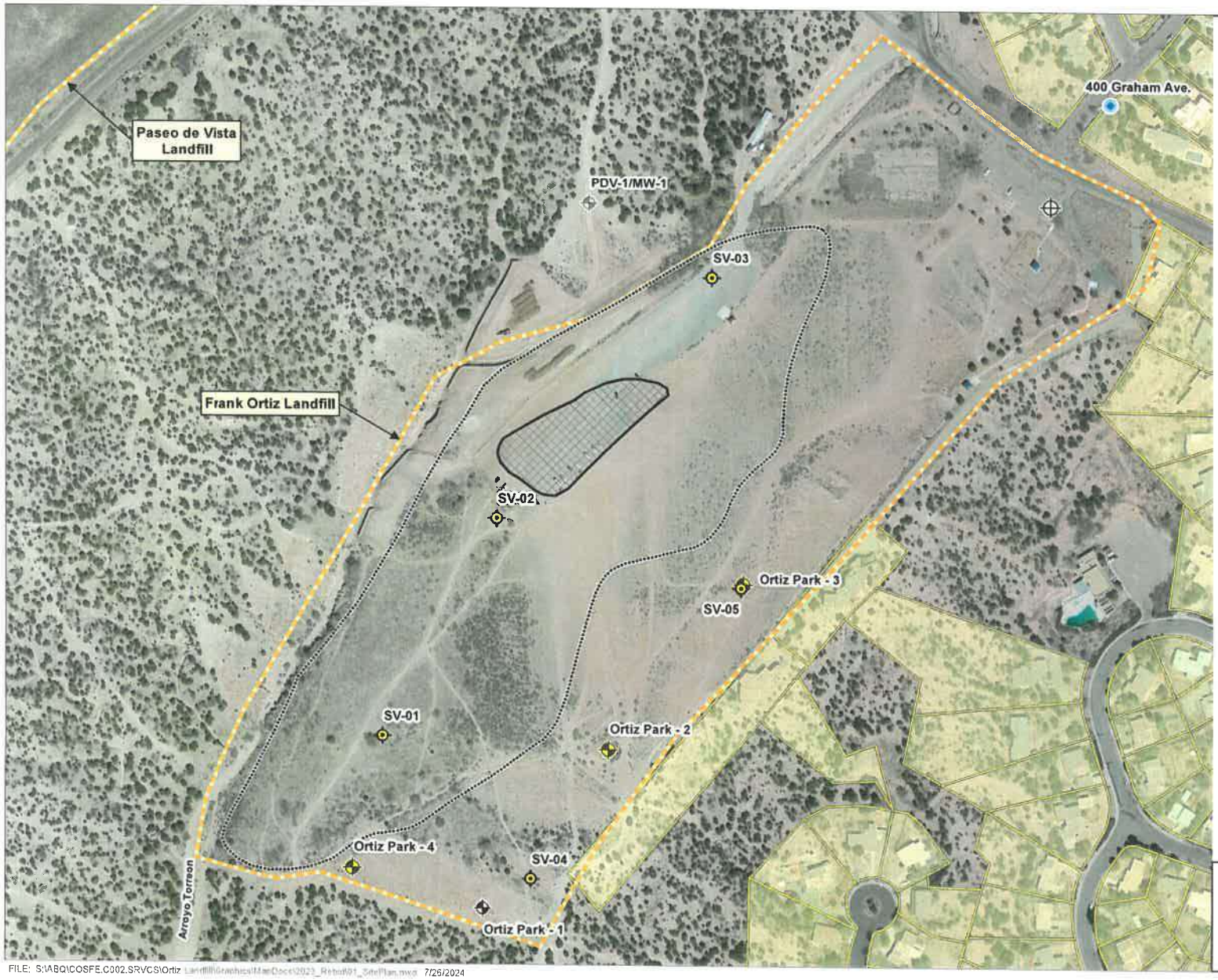

FILE: S:\ABQ\COSFE.C002.SRVCS\Ortiz Landfill\Graphics\MapDocs\2023_Rebuild\01_SitePlan.mxd 7/26/2024

Figure 2
Proposed Dual Purpose Well Location
Stage 1 Abatement Plan Modification Proposal,
Former Frank Ortiz Landfill,
Santa Fe, New Mexico

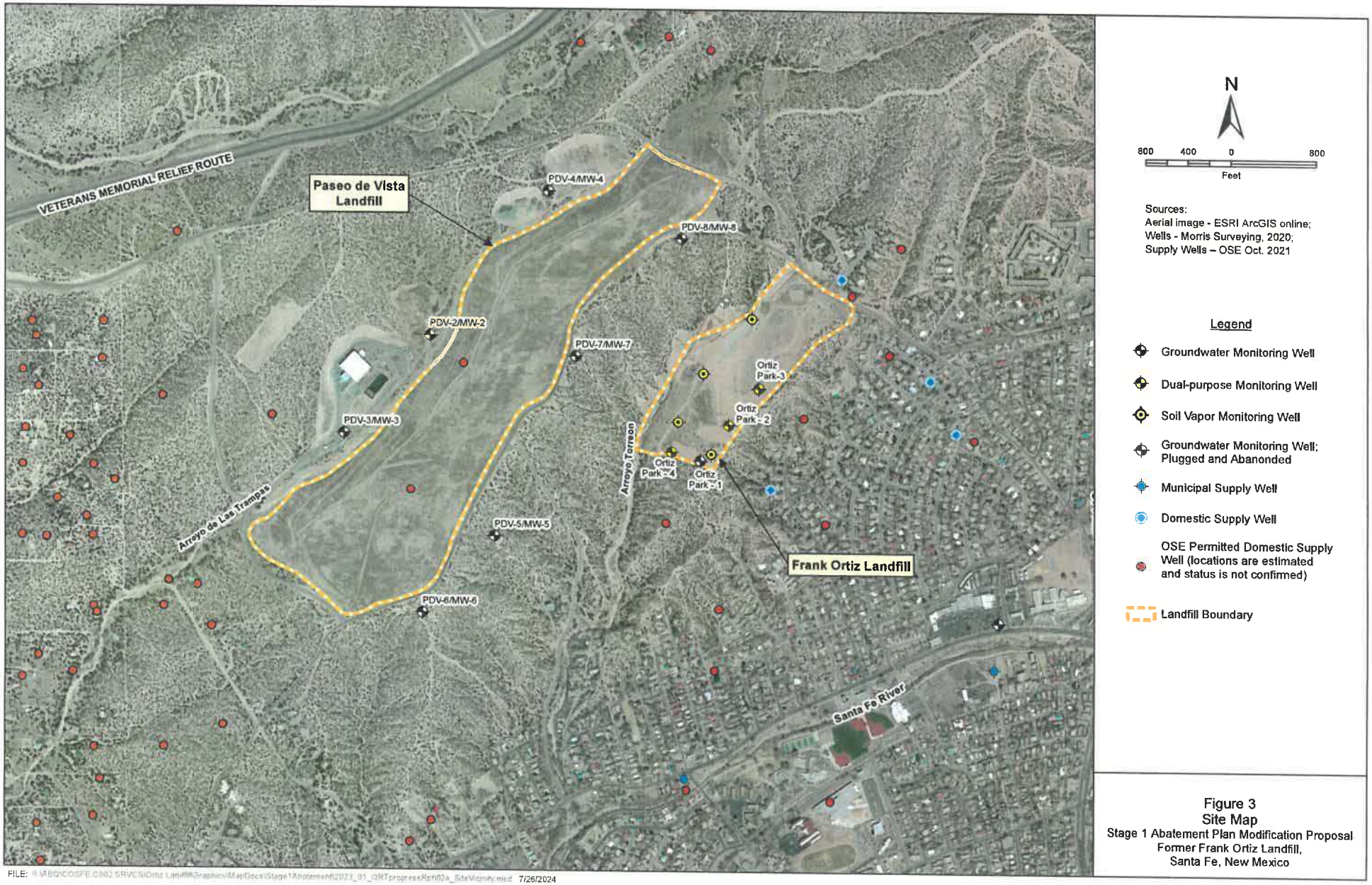

FILE: I:\ABQ\COSFE\0002 SRVCS\Ortiz Landfill\Graphics\MapDocs\Stage1Abatement\2023_01_QRTprogressRpt\02a_SiteVicinity.mxd 7/26/2024

Figure 3
Site Map
Stage 1 Abatement Plan Modification Proposal
Former Frank Ortiz Landfill,
Santa Fe, New Mexico

Table 1

TABLE 1
2024 NMED S1AP Requested Modifications
INTERA Cost Estimate
City of Santa Fe
Former Ortiz Landfill
September 5, 2024

Labor	Rate	Units	Task 1: SEM Completion and Reporting		Task 2: Vapor Intrusion Pathway Investigation		Task 3a: Project Planning		Task 3b and 3c: Soil Boring Advancement, Soil Sampling, & MW Installation		Task 3d: Monitoring Well Survey		Task 4: Expansion of GWM Program with Paseo Wells		Task 5: Single PFAS/1,4-D GWM Event		Task 6: Stormwater Corrective Action Plan		Task 7: Controlling Soil Gas and Landfill Gas Monitoring		Task 8: Updating Schedule		Total Tasks 1-8	
			Units	Price	Units	Price	Units	Price	Units	Price	Units	Price	Units	Price	Units	Price	Units	Price	Units	Price	Units	Price	Units	Price
Engineer (JJ)	239.21	Hours		$0.00		$0.00	24	$5,741.04	4	$956.84		$0.00	4	$956.84	4	$956.84	8	$1,913.68		$0.00		$0.00	44	$10,524.24
Project Manager (LP, JS)	150.00	Hours		$0.00		$0.00	6	$900.00	8	$1,200.00		$0.00		$0.00		$0.00	16	$2,400.00		$0.00		$0.00	30	$4,500.00
Technician (AM, PG, MR)	135.77	Hours		$0.00	42	$5,702.34	20	$2,715.40	69	$11,947.76	8	$1,086.16	8	$1,086.16	50	$7,603.12	80	$10,881.60		$0.00	4	$543.08	300	$41,545.61
Labor Subtotal				$0.00		$5,702.34		$9,356.44		$14,104.60		$1,086.16		$2,043.00		$8,559.96		$15,176.28		$0.00		$543.08		$56,570.86
Subcontractors																								
Laboratory																								
VOCs - TO-17	140.00	Each		$0.00		$0.00		$0.00		$0.00		$0.00		$0.00		$0.00		$0.00		$0.00			0	$0.00
VOCs - Soil	130.00	Each		$0.00		$0.00		$0.00	2	$260.00		$0.00		$0.00		$0.00		$0.00		$0.00			2	$260.00
SVOCs - Soil	170.00	Each		$0.00		$0.00		$0.00	2	$340.00		$0.00		$0.00		$0.00		$0.00		$0.00		$0.00	2	$340.00
Metals - Soil	393.00	Each		$0.00		$0.00		$0.00	2	$786.00		$0.00		$0.00		$0.00		$0.00		$0.00		$0.00	2	$786.00
PCBs - Soil	80.00	Each		$0.00		$0.00		$0.00	2	$160.00		$0.00		$0.00		$0.00		$0.00		$0.00		$0.00	2	$160.00
Nitrate/Nitrite, ammonia,total Kjeldhal nitrogen - Soil	110.00	Each		$0.00		$0.00		$0.00	2	$220.00		$0.00		$0.00		$0.00		$0.00		$0.00		$0.00	2	$220.00
VOCs - Water	130.00	Each		$0.00		$0.00		$0.00		$0.00		$0.00		$0.00		$0.00		$0.00		$0.00		$0.00	3	$390.00
SVOCs - Water	170.00	Each		$0.00		$0.00		$0.00		$0.00		$0.00	3	$390.00		$0.00		$0.00		$0.00		$0.00	3	$390.00
Metals - Water	383.00	Each		$0.00		$0.00		$0.00		$0.00		$0.00	3	$510.00		$0.00		$0.00		$0.00		$0.00	3	$510.00
PCBs - Water	80.00	Each		$0.00		$0.00		$0.00		$0.00		$0.00	3	$1,149.00		$0.00		$0.00		$0.00		$0.00	3	$1,149.00
Nitrate/Nitrite - Water	35.00	Each		$0.00		$0.00		$0.00		$0.00		$0.00	3	$240.00		$0.00		$0.00		$0.00		$0.00	3	$240.00
PFAS- EPA Method 1633	500.00	Each		$0.00		$0.00		$0.00		$0.00		$0.00	3	$105.00		$0.00		$0.00		$0.00		$0.00	3	$105.00
1-4 Dioxane	170.00	Each		$0.00		$0.00		$0.00		$0.00		$0.00		$0.00	10	$5,900.00		$0.00		$0.00		$0.00	10	$5,900.00
VOCs- IDW Water	130.00	Each		$0.00		$0.00		$0.00		$0.00		$0.00		$0.00	10	$1,700.00		$0.00		$0.00		$0.00		$0.00
RCRA Metals- IDW Water	135.92	Each		$0.00		$0.00		$0.00	1	$135.00		$0.00		$0.00		$0.00		$0.00		$0.00		$0.00		$0.00
VOCs- IDW Soil	130.00	Each		$0.00		$0.00		$0.00	1	$130.00		$0.00		$0.00		$0.00		$0.00		$0.00		$0.00		$0.00
TCLP RCRA Metals- IDW Soil	210.00	Each		$0.00		$0.00		$0.00	1	$210.00		$0.00		$0.00		$0.00		$0.00		$0.00		$0.00		$0.00
MRO/GRO/DRO- IDW Soil	180.00	Each		$0.00		$0.00		$0.00	1	$180.00		$0.00		$0.00		$0.00		$0.00		$0.00		$0.00		$0.00
Paint Filter Test/RCI	100.00	Each		$0.00		$0.00		$0.00	1	$100.00		$0.00		$0.00		$0.00		$0.00		$0.00		$0.00		$0.00
Hall Lab - TCLP Full	390.00	Each		$0.00		$0.00		$0.00		$0.00		$0.00		$0.00		$0.00		$0.00		$0.00		$0.00		$0.00
Hall Lab - TCLP Partial	270.00	Each		$0.00		$0.00		$0.00		$0.00		$0.00		$0.00		$0.00		$0.00		$0.00		$0.00	0	$0.00
Drilling																							0	$0.00
Yellow Jacket	103,746.00	Each		$0.00		$0.00		$0.00	1	$103,746.00		$0.00		$0.00		$0.00		$0.00		$0.00		$0.00	1	$103,746.00
Other Subcontractors																								
AES (Drum Removal)	6,626.00	Lump Sum		$0.00		$0.00		$0.00	1	$6,626.00		$0.00		$0.00		$0.00		$0.00		$0.00		$0.00	1	$6,626.00
Surveyor (MW and Topo Survey)	4,500.00	Lump Sum		$0.00		$0.00		$0.00		$0.00	1	$4,500.00		$0.00		$0.00	1	$4,500.00		$0.00		$0.00	2	$9,000.00
Pumps	1,000.00	Day		$0.00		$0.00		$0.00		$0.00		$0.00		$0.00		$0.00		$0.00		$0.00		$0.00	0	$0.00
Subcontractor Fee	0.15	%	$0.00	$0.00	$0.00	$0.00	$0.00	$0.00	$111,923.00	$16,953.45	$4,500.00	$675.00	$2,364.00	$359.10	$4,700.00	$1,005.00	$4,500.00	$675.00	$0.00	$0.00	$0.00	$0.00	$128,532.00	$19,279.80
Subcontractor Subtotal				$0.00		$0.00		$0.00		$129,976.45		$5,175.00		$2,723.10		$7,705.00		$5,175.00		$0.00		$0.00		$147,911.80
Direct Expenses																								
Field Expenses (H&S Supplies, tool kit, cell phone, etc.)	100.00	Day		$0.00		$0.00		$0.00	10	$1,000.00		$0.00	1	$100.00	2	$200.00		$0.00		$0.00		$0.00	13	$1,300.00
Drill Kit, tablet	125.00	Week		$0.00		$0.00		$0.00	2	$250.00		$0.00		$0.00		$0.00		$0.00		$0.00		$0.00	2	$250.00
Digital Camera	20.00	Week		$0.00		$0.00		$0.00	2	$40.00		$0.00		$0.00	2	$40.00		$0.00		$0.00		$0.00	4	$80.00
Photoionization Detector (PID)	240.00	Week		$0.00		$0.00		$0.00	2	$480.00		$0.00		$0.00		$0.00		$0.00		$0.00		$0.00	2	$480.00
PFAS Free Bailers, Tips and Twine	181.00	Total		$0.00		$0.00		$0.00		$0.00		$0.00		$0.00	1	$181.00		$0.00		$0.00		$0.00	1	$181.00
YSI Pro 1030	50.00	Day		$0.00		$0.00		$0.00		$0.00		$0.00	1	$50.00	2	$100.00		$0.00		$0.00		$0.00	3	$150.00
PFAS Free Field Filters	20.00	Each		$0.00		$0.00		$0.00		$0.00		$0.00		$0.00	2	$80.00		$0.00		$0.00		$0.00	2	$80.00
PFAS Free Water Level Meter	47.00	Day		$0.00		$0.00		$0.00		$0.00		$0.00		$0.00	2	$94.00		$0.00		$0.00		$0.00	2	$94.00
Field Truck	95.00	Day		$0.00		$0.00		$0.00		$0.00		$0.00	1	$95.00	2	$190.00		$0.00		$0.00		$0.00	3	$285.00
Field Truck	380.00	Week		$0.00		$0.00		$0.00	4	$1,520.00		$0.00		$0.00		$0.00		$0.00		$0.00		$0.00	4	$1,520.00
Mileage	0.54	Mile		$0.00		$0.00		$0.00	528	$285.12	132	$71.28	264	$142.56	264	$142.56		$0.00		$0.00		$0.00	1188	$641.52
Per Diem	119.00	Day		$0.00		$0.00		$0.00	16	$1,904.00		$0.00	2	$238.00	2	$238.00		$0.00		$0.00		$0.00	20	$2,380.00
Expenses Subtotal				$0.00		$0.00		$0.00		$2,479.12		$71.28		$626.56		$1,190.56		$0.00		$0.00		$0.00		$3,371.52
				$0.00		$5,702.34		$9,356.44		$149,560.17		$6,332.44		$5,421.66		$17,460.52		$20,350.28		$0.00		$543.08		$211,754.18

Subtotal	**$211,754.18**
NM GR Tax (office-Bernalillo County 7.6250%)	**$2,741.35**
NM GR Tax (Field- Santa Fe County 8.1875%)	**$14,637.19**
Project Total	**$229,132.72**

YELLOW JACKET
DRILLING SERVICES
The Southwest's Premier Provider of Innovative Drilling and Well Services

Ms. Lynda Price
INTERA, Inc.
2440 Louisiana Blvd. NE, Suite 700
Albuquerque, NM 87110

Office: 505.832.3244
Cell: 512.492.2072
E-mail: lprice@intera.com

Date: 7/16/24
Bid # (NM)JT24-6690

Subject:
Drilling Services -- Former Frank Ortiz Landfill Project, Santa Fe, NM

Dear Lynda:

The following is in response to INTERA, Inc. ('Client') provided RFP dated 7/9/24 for the above referenced project (no addendums).

Scope of Work:
Utilizing a TSI 150T (truck-mounted Sonic) drill rig, and Pulstar P12 (well service) rig:
Drill, construct, and develop (3) 4" SCH. 80 PVC groundwater monitoring with 1/4" SS soil vapor probes to a depth of 347' (drill 370' total / backfill 23' total / construct 370' total).
Step #1.) 0'-5' or Refusal, borehole clearance (hand auger and/or post hole).
Step #2.) 0'-370', Drill 8X9 and/or 7X8 telescoped (Sonic) borehole (collect continuous bagged sonic core sample).
Step #3.) 347'-370', Backfill borehole (TR30 bentonite pellets from 353'-370' / gravel pack from 347'-353').
Step #4.) 0'-347', Construct 4" well (1-30' screened interval), with 1/4" soil vapor probes attached (43'/34'/23').
Step #5.) Install 12" flush grade well box, with 6" x 36" concrete pad.
Step #6.) Install 8" field grade well box, with 6" x 36" concrete pad (no protective bollards required).
Step #7.) Develop well (surge, bail, and/or pump).

Proposed Drilling Equipment Package:
Tsi 150T truck-mounted drill rig, staffed with 3-man crew
Box truck
Equipment trailer
All-terrain forklift & tilt-hopper
4X4 Crew truck
Flatbed trailer
2K Water truck

Proposed Well Service Equipment Package:
Pulstar P12 rig, staffed with 2-man crew
Support trailer

Performance Timelines:
Drilling activities; as outlined: +/- (7) shifts
Well Services; as outlined: +/- (1) shift

Availability:
TBD at time of notification of intent to contract.
**Note: As of the time of this writing 'YJD' has the necessary resources available to mobilize and begin field activities as early as the week of 7/28/24.*

Project Cost Summary:
See attached.

'YJD' Proposal Assumptions & Conditions:
1.) 'Client' to provide all Local, State, Federal project specific permits.
2.) All drilling locations are to be clear of any and all overhead & subsurface utilities.
3.) All drilling locations are accessible by way of 2-wheel drive truck mounted drilling & related equipment.
4.) All drill cuttings generated will be placed in 'Client' provided roll-off bins, located within 100' of the drilling locations.
5.) If required; profiling and off-site disposal of all drill cuttings will be the responsibility of 'Client'.
6.) All fluids generated will be placed in 'Client' provided storage tanks, located within 100' of the drilling locations.
7.) If required; profiling and off-site disposal of all fluids generated will be the responsibility of 'Client'.
8.) Schedule/Pricing is based on a single rig operation; utilizing (1) crew, working 11/hour shifts (on-site), working a 10/on (days) - 4/off (days) schedule (including mob/demob/travel time); or as 'YJD' deems necessary to complete what it views as critical phases of the project.
9.) Rig standby due to unreadiness of the working locations or 'Client' delays will be billed at the following hourly rates; 150T ($765), P12 ($345).
10.) Project is not subject to Union, Davis Bacon, Prevailing, TERO labor rates.
11.) If the project encounters difficulties beyond our control or if the scope of work is altered, 'YJD' reserves the right to renegotiate the price.
12.) Materials; due to the market price fluctuations of steel and petroleum based products; 'YJD' cannot guarantee the price of the materials required to complete the project beyond a period of 10-working days from the date in which the pricing is provided. In the event that a material price increase occurs; 'YJD' reserves the right to pass on the difference in the form of a revised proposal, or by using the change order process.
All well casing, screen, and gravel pack materials are non-restockable; and will be billed to 'Client' at the conclusion of the project regardless of use. The quantities of non-restockable materials will be discussed with 'Client' and agreed upon prior to placing order.
13.) EIA Fuel Use Market Adjustment; due to the current price fluctuations of petroleum products 'YJD' has based the provided pricing on the most recent available weekly retail gasoline and diesel prices as reported by the Energy Information Administration ('EIA' - Official Energy Statistics from the US Government). 'YJD' has used the reported area average of ($4.03-Gallon) to calculate it's bid; in the event that the cost of fuel increases prior to the start and/or during the course of the project 'YJD' will invoice for the additional costs on a per-shift basis. The per-shift charge will be based on the difference of the fuel cost per-gallon at the time of bid; plus 15% mark-up verses the actual cost per-gallon during the time period in which the project is completed.
*NOTE: The multiplier to calculate the fuel use market adjustment on a per-shift basis is based on the equipment package utilized; for this bid the per-shift multiplier is based on the fixed amounts as follows; 150T (75-gallons), P12 (40-gallons).
14.) Provided pricing does not include any applicable State and/or Local Taxes. Sales Tax will be charged unless a Sales Tax Exemption Certificate is provided.
15.) This proposal is valid for (60) days from the date provided.

For new Clients payment terms will be established by 'YJD' based on 'Client' financial history. 'YJD' will utilize information available through Dun & Bradstreet ('D&B') to make the determination.

For established Clients services rendered will be billed promptly upon completion of work. Terms are net **thirty (30) days** unless otherwise agreed in writing in advance. A delinquency charge of 1.5% per month will apply to all past due invoices, unless a lower rate is required by law. Client agrees to pay all court costs and attorneys fees, should court proceedings be initiated or attorneys be retained to collect past due amounts.

We at Yellow Jacket Drilling Services thank you for the opportunity to provide this proposal. If you have any questions, or if we can be of any further assistance please do not hesitate to contact us at (888) 495-3745. We look forward to hearing from you soon.

Sincerely,
Yellow Jacket Drilling Services, LLC

John Truax

John Truax
Executive Vice President

Item	Quantity	Unit	Cost	Price
Project Cost Summary				
150T Drilling Equipment: Mob/Demob	1	LS	$ 26,115.00	$ 26,115.00
150T Equipment Inspections, Site Specific Training, Meetings..	0	HR	$ 765.00	$ -
Borehole Clearance: Hand Auger Excavate to 5' or Refusal	1	HR	$ 765.00	$ 765.00
Drill: 8X9 and/or 7X8 Sonic Borehole	370	LF	$ 67.00	$ 24,790.00
Well Construction and/or Backfill: Labor Only	370	LF	$ 50.00	$ 18,500.00
Well Material: Trucking	1	LS	$ 3,485.00	$ 3,485.00
Well Material: 4" SCH. 80 PVC Screen	30	LF	$ 25.00	$ 750.00
Well Material: 4" SCH. 80 PVC Casing	317	LF	$ 23.00	$ 7,291.00
Well Material; SS Vapor Probe & Fittings	3	EA	$ 500.00	$ 1,500.00
Well Material; 1/4" SS Tubing (100' Roll)	90	LF	$ 14.50	$ 1,305.00
Well Material: Annular Gravel Pack, Seal, Grout..	370	LF	$ 13.00	$ 4,810.00
Well Box: 8" Field Grade, with 6" x 36" Concrete Pad	1	EA	$ 1,355.00	$ 1,355.00
Protective Bollard: 4" Steel	0	EA	$ 500.00	$ -
150T Rig Move-on, Set-up, Take-down, Clean-up..	5	HR	$ 765.00	$ 3,825.00
150T Rig Standby ('Client' Directed Work Stoppage..)	0	HR	$ 765.00	$ -
Visqueen Plastic Roll (Drill Pad Protection)	1	EA	$ 160.00	$ 160.00
P12 Well Service Equipment: Mob/Demob	1	LS	$ 6,865.00	$ 6,865.00
P12 Well Service Equipment Inspections, On-Site Training, Meetings..	0	HR	$ 345.00	$ -
Well Service: Development (All Time Associated)	6	HR	$ 345.00	$ 2,070.00
P12 Rig Standby ('Client' Directed Work Stoppage..)	0	HR	$ 345.00	$ -
Visqueen Plastic Roll (Drill Pad Protection)	1	EA	$ 160.00	$ 160.00
				$ -
Site Protection: Security Guard (Working Days: 13-Hours)	0	DY	Cost + 15%	$ -
Site Protection: Security Guard (Working Days: 24-Hours)	0	DY	Cost + 15%	$ -
Porta-Potty: Transportation, Rental, Service.. (1-Month Minium)	0	MO	Cost + 15%	$ -
Trash Service: Transportation, Rental, Service.. (1-Month Minium)	0	MO	Cost + 15%	$ -
Estimated Project Total				**$ 103,746.00**

STATEMENT OF QUALIFICATIONS

Yellow Jacket Drilling
1-888-4YJDRIL (1-888-495-3745)
yjdrilling.com

YELLOW JACKET
DRILLING SERVICES

Yellow Jacket Drilling Services (YJD) has built its reputation throughout the western United States as being a premier provider of high quality, safe and cost effective drilling services. YJD's corporate office is located in Phoenix, Arizona. The projects that we service are supported from offices located in Arizona, California, Colorado, and Oregon.

As a qualified small business enterprise; we are able to offer several innovative techniques and solutions for your drilling needs many of which were previously only available from our larger business competitors.

YJD specializes in, but is not limited to, providing drilling services to the Environmental, Geotechnical, Mining, Water Supply and Energy market sectors. Some of our available drilling methodologies include; Direct Push, Hollow-Stem Auger, Air Rotary, Mud Rotary, Sonic, Dual Wall Reverse Circulation (RC), Air Rotary Casing Hammer (ARCH), Under-Reaming Casing Advancement (Tubex/Stratex), Flooded Reverse, Conventional and Wireline Coring.

Our diverse fleet of equipment includes multiple Hollow-Stem Auger, Sonic and Rotary drill rigs. With our fleet we have the capability to do everything from drilling in excess of 200' with hollow stem auger, to drilling depths beyond 2,000' using rotary techniques. Some of our specialized rigs allow us the ability to drill in difficult access settings such as under a service station canopy, in a building, on a barge, or on a remote hillside. Our fleet is maintained through a preventative maintenance program that enables us to operate at peak performance at all times.

Safety is our number one priority and all YJD employees maintain numerous industry certifications including; 40-hour OSHA, MSHA, Smith Defensive Driving, as well as certification and participation in multiple safety programs such as API and LPS. Annual refreshers and medical monitoring are mandatory, as well as daily tailgate and all hands monthly safety meetings. We believe that our EMR rating is reflective of our efforts (2022 = 0.65, 2021 = 0.68, 2020 = 0.63)

YJD is committed to maintaining the highest quality workmanship, reliability, professionalism, and efficiency in the industry. Our personnel is extremely knowledgeable and have years of experience. We understand our clients' needs, and want every customer to be completely satisfied with our work. Each and every employee at YJD is willing to go the extra step to ensure we meet that goal. With such a dedicated group, you can be certain we will get the job done properly, safely, cost-effectively, and on time.

AN ATTITUDE OF EXCELLENCE

It plays a role in everything we do - whether it concerns safety, our customers, equipment, or drill methods.

WE NEVER PROMISE MORE THAN WE CAN DELIVER

By placing a strong emphasis on safety, maintenance, high quality equipment, and proper scheduling practices, we provide maximum efficiency and flexibility to meet your ever-changing project needs.

WE VALUE LASTING PARTNERSHIPS WITH OUR CUSTOMERS

Maintaining an honest dialogue and keeping close personal contact with all involved is our way of ensuring your needs will be met. You benefit from high performance, a hassle-free job, and above standard results.

OUR GOAL IS YOUR COMPLETE SATISFACTION

Yellow Jacket Drilling has become known throughout the western United States for providing high quality, safe, and cost effective drilling services.

YELLOW JACKET DRILLING SERVICES

As one of the most respected names in the industry, Yellow Jacket Drilling stands to become one of your most trusted service providers.

Yellow Jacket Drilling Services, LLC

Arizona	California	Colorado	Oregon
(602) 453-3252	(909) 989-8563	(303) 243-5011	(503) 285-2461

TSi 150T

Yellow Jacket Drilling
1-888-4YDRIL (1-888-495-3745)
yjdrilling.com

The TSi 150T manufactured by Terra Sonic International an industry leader in the design, and manufacturing of sonic drill rigs, tooling and support equipment is without question the MOST POWERFUL sonic drill rig available in the industry.

Every component on this state of the art rig has been specifically designed to take the force that the powerful sonic oscillator can produce, and then some. No other sonic rig is going to get the job done safer, faster, or more efficiently than the TSi 150T can.

The TSi 150T sonic oscillator utilizes up to 150 HP to generate powerful sonic energy in the drill string to an impressive rated depth of 700' with 6" casing; and is capable of advancing casing sizes up to 12" in diameter.

The angle or vertical capable TSi 150T is not only extremely powerful; this versatile machine is also equipped to collect split-spoon and/or SPT samples using a 140 lb. automatic sampling hammer, and if bedrock is present can easily be adapted to rotary drill, wire-line core, or conventional core using various sizes and methods.

rigspecs

Sonic Head
Oscillator Frequency – 0 to 150 Hz
Oscillator Force – 50,000 lbs.
Max Torque – 4,677 ft-lbs.
Rotational Speed – 0 to 80 rpm

Engine
John Deere tier 4 turbo charged diesel engine rated at 255 horsepower @ 2000 RPM.

Mast
Head Tilt – 87-degrees
Head Travel – 24.5'
Head Travel Speed – 0 to 180 fpm
Overall Length – 32'
Drilling Angle – Vertical to 45-degrees off vertical
Upper Jib Hoist – 2,000 lb. capacity, 150 fpm
Lower Jib Hoist – 2,000 lb. capacity, 150 fpm
Wiggle – 6" lateral swing, 6" fore/aft
Feed System – Hydraulic cylinder operated feed frame
Rod Rack – 800' of vertical mast rod storage

Breakout
Wrench – Dual cylinders on both top and bottom wrench
Wrench Size Range – 3" to 12"
Wrench Travel – 19-degree Swing
Wrench Clamp Force – Adjustable pressure preset at 34,500 lbs.

Truck
Peterbilt Model 365 (6x4) equipped with a Cummins diesel engine rated at 425 horsepower @ 1800 RPM. 20,000-lb. rated front axle and a tandem rear axle with a 40,000-lb. rating.







Average Dimensions & Weight

	Folded	*Unfolded*
Width	8' - 5"	10' - 11 ¼"
Length	33' 2 ½"	37'
Height	12' - 9 1/8"	26' - 6"

Weight 42,000 lbs. Ground Clearance 14"

Sonic Tooling Diameters

Rod • Casing Core Barrel

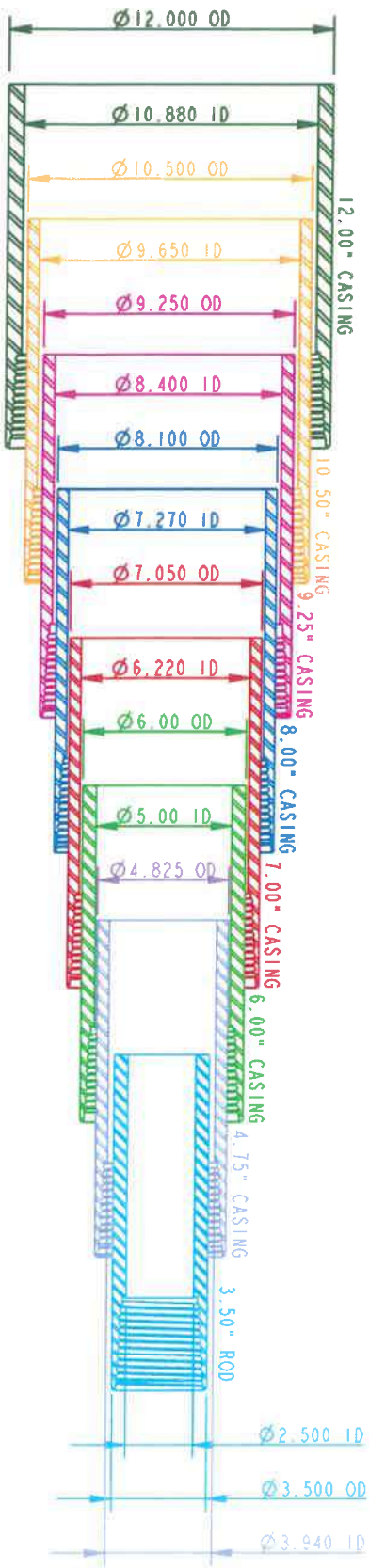

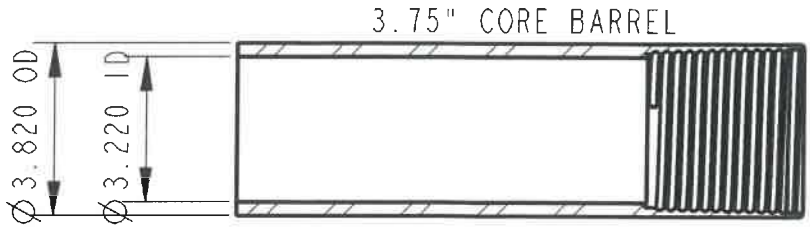

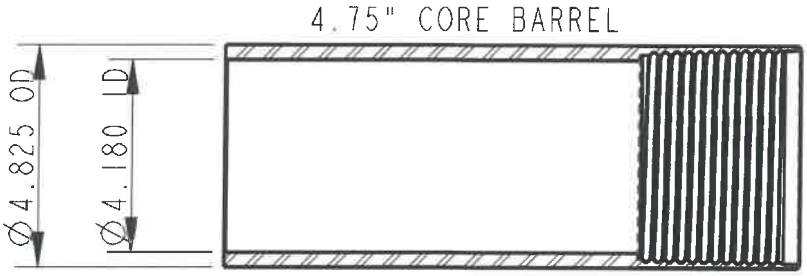

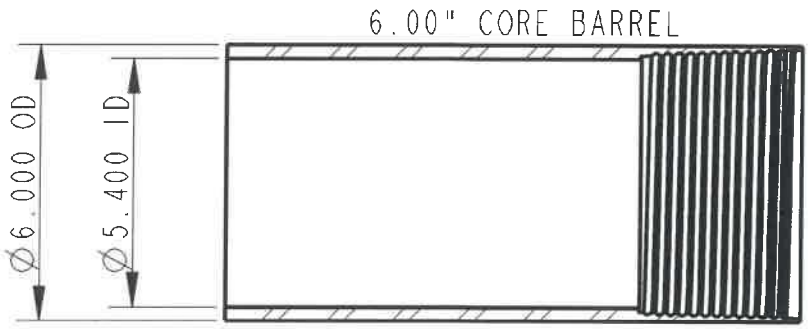

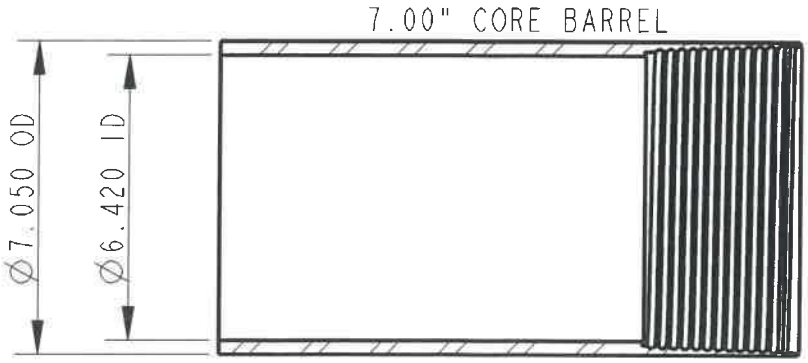

Dimensions are in inches.
Diagrams courtesy of Terra Sonic International.

24-0461
Item#
Munis Contract #3204578
Original Contract Item# 23-0578
SWPA/GSA/Coop/RFP/ITB #: SHR000022790

CITY OF SANTA FE
AMENDMENT No.1 TO
PROFESSIONAL SERVICES CONTRACT
ITEM#23-0578

This AMENDMENT No.1. (the "Amendment") amends the CITY OF SANTA FE PROFESSIONAL SERVICES CONTRACT, dated September 25, 2023, (the "Contract"), between the City of Santa Fe (the "City") and INTERA Incorporated. (the "Contractor"). The date of this Amendment shall be the date when it is executed by the City and the Contractor whichever occurs last.

RECITALS:

A. Under the terms of the Contract, Contractor has agreed to provide the Ground Water Monitoring, Vapor Monitoring, Other Environmental and Engineering Services and Reporting for two City of Santa Fe closed landfills.

B. Pursuant to Article 14 of the Contract, and for good and valuable consideration, the receipt and sufficiency of which are acknowledged by the parties, the City and the Contractor agree as follows:

3. COMPENSATION.

Article 3, paragraph A of the Contract is amended to increase the amount of compensation by a total of one hundred fifty thousand dollars ($150,000) so that Article 3, paragraph A reads in its entirety as follows:

A. The City shall pay the Contractor in full payment for services satisfactorily performed as described in Exhibit "A" of the original contract. The total amount payable to the contractor under this Agreement, including gross receipts tax and expenses, shall not exceed two hundred ninety-nine thousand, four hundred eighty-nine dollars and

one cent ($299,489.01). This amount is a maximum and not a guarantee that the work assigned to be performed by the Contractor under this Agreement shall equal the amount stated herein. The parties do not intend for the Contractor to continue to provide services without compensation when the total compensation amount is reached. Contractor is responsible for notifying the city when the services provided under this Agreement reach the total compensation amount. In no event will the Contractor be paid for services provided in excess of the total compensation amount without this Agreement being amended in writing prior to those services in excess of the total compensation amount being provided.

4. TERM:

Article 4 of the Contract is hereby deleted in its entirety and substitute the following Article 4 in its place:

THIS AGREEMENT SHALL NOT BECOME EFFECTIVE UNTIL APPROVED BY THE CITY. This Agreement shall terminate on June 30, 2025, unless terminated pursuant to paragraph 5 (Termination), or paragraph 6 (Appropriations). The City reserves the right to renew the contract on an annual basis by mutual Agreement not to exceed a four year in accordance with NMSA 1978, §§13-1-150 through 152.

CONTRACT IN FULL FORCE.

Except as specifically provided in this Amendment, the Contract remains and shall remain in full force and effect, in accordance with its terms.

IN WITNESS WHEREOF, the parties have executed this Amendment No.1 to the Contract as of the dates set forth below.

CITY OF SANTA FE:

Alan Webber (Jul 22, 2024 11:09 MDT)

ALAN WEBBER, MAYOR

DATE: Jul 22, 2024

CONTRACTOR:
INTERA Incorporated

Joseph Tracy

JOE TRACY, VICE PRESIDENT

DATE: May 29, 2024
CRS# 74-3010638

Registration #227829

ATTEST:

GERALYN CARDENAS, INTERIM CITY CLERK
GB MTG 07/19/2024 XIV

CITY ATTORNEY'S OFFICE:

Marcos Martinez
SENIOR ASSISTANT CITY ATTORNEY

APPROVED FOR FINANCES:

Emily K. Oster

EMILY OSTER, FINANCE DIRECTOR

Signature: Marcos Martinez
Marcos Martinez (Jun 3, 2024 08:01 MDT)

Email: mdmartinez@santafenm.gov

INTERA _Amendment 1_plate_V4_12.20_.2023 _ (1) 5-9-2024-Final CAO

Final Audit Report 2024-06-03

Created:	2024-05-29
By:	Amy Cawthon (amcawthon@santafenm.gov)
Status:	Signed
Transaction ID:	CBJCHBCAABAAqLEBooZEYbPcfKmEcFcXxOKKkswBBAbn

"INTERA _Amendment 1_plate_V4_12.20_.2023_ (1) 5-9-2024-Final CAO" History

Document created by Amy Cawthon (amcawthon@santafenm.gov)
2024-05-29 - 11:09:37 PM GMT- IP address: 63.232.20.2

Document emailed to Joseph Tracy (jtracy@intera.com) for signature
2024-05-29 - 11:10:19 PM GMT

Email viewed by Joseph Tracy (jtracy@intera.com)
2024-05-29 - 11:22:45 PM GMT- IP address: 74.51.214.122

Document e-signed by Joseph Tracy (jtracy@intera.com)
Signature Date: 2024-05-29 - 11:34:21 PM GMT - Time Source: server- IP address: 74.51.214.122

Document emailed to Marcos Martinez (mdmartinez@santafenm.gov) for signature
2024-05-29 - 11:34:22 PM GMT

Email viewed by Marcos Martinez (mdmartinez@santafenm.gov)
2024-05-29 - 11:35:29 PM GMT- IP address: 104.47.65.254

Email viewed by Marcos Martinez (mdmartinez@santafenm.gov)
2024-06-03 - 2:01:14 PM GMT- IP address: 76.127.57.172

Document e-signed by Marcos Martinez (mdmartinez@santafenm.gov)
Signature Date: 2024-06-03 - 2:01:27 PM GMT - Time Source: server- IP address: 76.127.57.172

Agreement completed.
2024-06-03 - 2:01:27 PM GMT

Powered by
Adobe
Acrobat Sign

Item# 23-0578
Munis Contract# ~~3209217~~ 3204358
Albuquerque Contract SHR000022790

CITY OF SANTA FE

PROFESSIONAL SERVICES AGREEMENT

THIS AGREEMENT is made and entered into by and between the City of Santa Fe, New Mexico, hereinafter referred to as the "City," and **INTERA, Incorporated**, hereinafter referred to as the "Contractor," and is effective as of the date set forth below upon which it is executed by the Parties.

RECITALS

WHEREAS, the Chief Procurement Officer of the City has made the determination that this Agreement is in accordance with the provisions of the New Mexico Procurement Code (NMSA 1978, 13-1-28 et seq.) pursuant to NMSA 1978, § 13-1-129; and

WHEREAS, the Contractor is one of such requisite and qualifications and is willing to engage with the City for professional services, in accordance with the terms and conditions hereinafter set out, and the Contractor understanding and consenting to the foregoing is willing to render such professional services as outlined in the Agreement; and

NOW, THEREFORE, the parties hereby agree as follows:

1. Scope of Work.
The Contractor shall provide the following services for the City and as described in Exhibit "A" attached hereto:

Four Quarters of New Mexico Environment Department Ground Water Quality Bureau, Stage 1 Abatement Plan Monitoring and Reporting for the Former Frank Ortiz Landfill, and Four Quarters of New Mexico Environment Department Solid Waste Bureau Monitoring and Reporting for the Paseo de Vista Landfill, located within Santa Fe County, New Mexico.

Site work and report deliverables to be completed in accordance with amended work plan approved by the New Mexico Environment Department, Ground Water Quality Bureau as detailed in the site Sampling and Analysis and Quality Assurance Project Plan for Waste and Vadose Zone Characterization. (Revision 3.0 dated November 2, 2019)

Stage 1 Abatement Plan Modification Surface Emissions Monitoring, Activities which were required by regulators in a notification dated September 23, 2021. The proposed schedule for Site Work and Report Deliverables including development is detailed below.

A. 2023 3rd Quarter, Field Task
   I. Surface Emissions Monitoring Event
   II. Landfill Gas Monitoring Event

B. 2023 3rd Quarter, Deliverable
   I. Provide Letter Report with Figures and Tables summarizing Surface Emissions Monitoring, and Landfill Gas Monitoring Event results.

C. 2023 4th Quarter Field Task
   I. Surface Emissions Monitoring Event
   II. Landfill Gas Monitoring Event
   III. Groundwater Monitoring Event
   IV. Soil Vapor Collection Event

D. 2023 4th Quarter Deliverable
   I. Report with Figures and Tables summarizing all field task results and evaluating Site Conditions.

E. 2024 1st Quarter Field Tasks
   I. Surface Emissions Monitoring Event
   II. Landfill Gas Monitoring Event

F. 2024 1st Quarter Deliverables
   I. Provide Letter Report with Figures and Tables summarizing Surface Emissions Monitoring, and Landfill Gas Monitoring Event results.

G. 2024 2nd Quarter Field Tasks
   I. Surface Emissions Monitoring Event
   II. Landfill Gas Monitoring Event
   III. Soil Vapor Collection Event
   IV. Final Benchmark Settlement Report

H. 2024 2nd Quarter Deliverables
   I. Report with Figures and Tables summarizing all field task results and evaluation Site Conditions

2. **Standard of Performance: Licenses.**

A. The Contractor represents that Contractor possesses the personnel, experience and knowledge necessary to perform the services described under this Agreement. The Contractor does hereby accept its designation as professional service, rendering services related to required regulatory deliverables of amended regulatory work plan provided by New Mexico Environment Department (NMED) Solid Waste Bureau, and NMED Ground Water Quality Bureau for the City, as set forth in this Agreement.

B. The Contractor agrees to obtain and maintain throughout the term of this

Agreement, all applicable professional and business licenses required by law, for itself, its employees, agents, representatives, and subcontractors.

3. Compensation.

A. The City shall pay to the Contractor in full payment for services satisfactorily performed at the rate as described in Exhibit "A" attached and incorporated herein. Listed pricing will be utilized based on hourly rate listed in the item description and unit, within unit of measure as EA depending on the service as indicated in Exhibit "A". The total amount payable to the Contractor under this Agreement, including gross receipts tax and expenses, shall not exceed **one hundred forty-nine thousand four hundred eighty-nine dollars and one cent ($149,489.01).** This amount is a maximum and not a guarantee that the work assigned to be performed by Contractor under this Agreement shall equal the amount stated herein. The parties do not intend for the Contractor to continue to provide services without compensation when the total compensation amount is reached. Contractor is responsible for notifying the city when the services provided under this Agreement reach the total compensation amount. In no event will the Contractor be paid for services provided in excess of the total compensation amount without this Agreement being amended in writing prior to those services in excess of the total compensation amount being provided.

B. Payment is subject to availability of funds pursuant to the Appropriations Paragraph set forth below and to any negotiations between the parties from year to year pursuant to Paragraph 1, Scope of Work, and to approval by the City. All invoices MUST BE received by the City no later than thirty 30) days after the termination of the Fiscal Year in which the services were delivered. Invoices received after such date WILL NOT BE PAID.

C. Contractor must submit a detailed statement accounting for all services performed and expenses incurred. If the City finds that the services are not acceptable, within thirty days after the date of receipt of written notice from the Contractor that payment is requested, it shall provide the Contractor a letter of exception explaining the defect or objection to the services, and outlining steps the Contractor may take to provide remedial action. Upon certification by the City that the services have been received and accepted, payment shall be tendered to the Contractor within thirty days after the date of acceptance. If payment is made by mail, the payment shall be deemed tendered on the date it is postmarked. However, the City shall not incur late charges, interest, or penalties for failure to make payment within the time specified herein.

4. Term.

THIS AGREEMENT SHALL NOT BECOME EFFECTIVE UNTIL APPROVED BY THE CITY. This Agreement shall terminate on June 30, 2024, unless terminated pursuant to paragraph 5 (Termination), or paragraph 6 (Appropriations). In accordance with Section 13-1-150 NMSA 1978, no contract term for a professional services contract, including extensions and renewals, shall exceed four years, except as set forth in Section 13-1-150 NMSA 1978.

5. Termination.

A. Termination. This Agreement may be terminated by the City upon written notice delivered to the other party at least thirty (30) days prior to the intended date of termination. Except as otherwise allowed or provided under this Agreement, the City's sole liability upon such termination shall be to pay for acceptable work performed prior to the Contractor's receipt

of the notice of termination, if the City is the terminating party, or the Contractor's sending of the notice of termination, if the Contractor is the terminating party; provided, however, that a notice of termination shall not nullify or otherwise affect either party's liability for pre-termination defaults under or breaches of this Agreement. The Contractor shall submit an invoice for such work within thirty (30) days of receiving or sending the notice of termination. Notwithstanding the foregoing, this Agreement may be terminated immediately upon written notice to the Contractor if the Contractor becomes unable to perform the services contracted for, as determined by the City or if, during the term of this Agreement, the Contractor or any of its officers, employees or agents is indicted for fraud, embezzlement or other crime due to misuse of City funds or due to the Appropriations paragraph herein. *THIS PROVISION IS NOT EXCLUSIVE AND DOES NOT WAIVE THE City's OTHER LEGAL RIGHTS AND REMEDIES CAUSED BY THE CONTRACTOR'S DEFAULT/BREACH OF THIS AGREEMENT.*

B. Termination Management. Immediately upon receipt by either the City or the Contractor of notice of termination of this Agreement, the Contractor shall: 1) not incur any further obligations for salaries, services or any other expenditure of funds under this Agreement without written approval of the City; 2) comply with all directives issued by the City in the notice of termination as to the performance of work under this Agreement; and 3) take such action as the City shall direct for the protection, preservation, retention or transfer of all property titled to the City and records generated under this Agreement. Any non-expendable personal property or equipment provided to or purchased by the Contractor with contract funds shall become property of the City upon termination and shall be submitted to the City as soon as practicable.

6. **Appropriations.**

The terms of this Agreement are contingent upon sufficient appropriations and authorization being made by the Governing Body for the performance of this Agreement. If sufficient appropriations and authorization are not made by the Governing Body, this Agreement shall terminate immediately upon written notice being given by the City to the Contractor. The City's decision as to whether sufficient appropriations are available shall be accepted by the Contractor and shall be final. If the City proposes an amendment to the Agreement to unilaterally reduce funding, the Contractor shall have the option to terminate the Agreement or to agree to the reduced funding, within thirty (30) days of receipt of the proposed amendment.

7. **Status of Contractor.**

The Contractor and its agents and employees are independent contractors performing professional services for the City and are not employees of the City. The Contractor and its agents and employees shall not accrue leave, retirement, insurance, bonding, use of City vehicles, or any other benefits afforded to employees of the City as a result of this Agreement. The Contractor acknowledges that all sums received hereunder are reportable by the Contractor for tax purposes, including without limitation, self-employment and business income tax. The Contractor agrees not to purport to bind the City unless the Contractor has express written authority to do so, and then only within the strict limits of that authority.

8. **Assignment.**

The Contractor shall not assign or transfer any interest in this Agreement or assign any claims for money due or to become due under this Agreement without the prior written approval

of the City.

9. **Subcontracting.**

The Contractor shall not subcontract any portion of the services to be performed under this Agreement without the prior written approval of the City. No such subcontract shall relieve the primary Contractor from its obligations and liabilities under this Agreement, nor shall any subcontract obligate direct payment from the City.

10. **Release.**

Final payment of the amounts due under this Agreement shall operate as a release of the City, its officers and employees from all liabilities, claims and obligations whatsoever arising from or under this Agreement.

11. **Confidentiality.**

Any confidential information provided to or developed by the Contractor in the performance of this Agreement shall be kept confidential and shall not be made available to any individual or organization by the Contractor without the prior written approval of the City.

12. **Product of Service – Copyright.**

All materials developed or acquired by the Contractor under this Agreement shall become the property of the City and shall be delivered to the City no later than the termination date of this Agreement. Nothing developed or produced, in whole or in part, by the Contractor under this Agreement shall be the subject of an application for copyright or other claim of ownership by or on behalf of the Contractor.

13. **Conflict of Interest; Governmental Conduct Act.**

A. The Contractor represents and warrants that it presently has no interest and, during the term of this Agreement, shall not acquire any interest, direct or indirect, which would conflict in any manner or degree with the performance or services required under the Agreement.

B. The Contractor further represents and warrants that it has complied with, and, during the term of this Agreement, will continue to comply with, and that this Agreement complies with all applicable provisions of the Governmental Conduct Act, Chapter 10, Article 16 NMSA 1978.

C. Contractor's representations and warranties in Paragraphs A and B of this Article 12 are material representations of fact upon which the City relied when this Agreement was entered into by the parties. Contractor shall provide immediate written notice to the City if, at any time during the term of this Agreement, Contractor learns that Contractor's representations and warranties in Paragraphs A and B of this Article 12 were erroneous on the effective date of this Agreement or have become erroneous by reason of new or changed circumstances. If it is later determined that Contractor's representations and warranties in Paragraphs A and B of this Article 12 were erroneous on the effective date of this Agreement or have become erroneous by reason of new or changed circumstances, in addition to other remedies available to the City and

notwithstanding anything in the Agreement to the contrary, the City may immediately terminate the Agreement.

D. All terms defined in the Governmental Conduct Act have the same meaning in this section.

14. **Amendment.**

A. This Agreement shall not be altered, changed or amended except by instrument in writing executed by the parties hereto and all other required signatories.

B. If the City proposes an amendment to the Agreement to unilaterally reduce funding due to budget or other considerations, the Contractor shall, within thirty (30) days of receipt of the proposed Amendment, have the option to terminate the Agreement, pursuant to the termination provisions as set forth in Article 4 herein, or to agree to the reduced funding.

15. **Entire Agreement.**

This Agreement, together with any other documents incorporated herein by reference and all related Exhibits and Schedules constitutes the sole and entire agreement of the Parties with respect to the subject matter of this Agreement, and supersedes all prior and contemporaneous understandings, agreements, representations, and warranties, both written and oral, with respect to the subject matter. In the event of any inconsistency between the statements in the body of this Agreement, and the related Exhibits and Schedules, the statements in the body of this Agreement shall control.

16. **Penalties for violation of law.**

The Procurement Code, Sections 13-1-28 through 13-1-199, NMSA 1978, imposes civil and criminal penalties for its violation. In addition, the New Mexico criminal statutes impose felony penalties for illegal bribes, gratuities and kickbacks.

17. **Equal Opportunity Compliance.**

The Contractor agrees to abide by all federal and state laws and rules and regulations, and Santa Fe City Code, pertaining to equal employment opportunity. In accordance with all such laws of the State of New Mexico, the Contractor assures that no person in the United States shall, on the grounds of race, religion, color, national origin, ancestry, sex, age, physical or mental handicap, or serious medical condition, spousal affiliation, sexual orientation or gender identity, be excluded from employment with or participation in, be denied the benefits of, or be otherwise subjected to discrimination under any program or activity performed under this Agreement. If Contractor is found not to be in compliance with these requirements during the life of this Agreement, Contractor agrees to take appropriate steps to correct these deficiencies.

18. **Applicable Law.**

The laws of the State of New Mexico shall govern this Agreement, without giving effect to its choice of law provisions. Venue shall be proper only in a New Mexico court of competent jurisdiction in accordance with NMSA 1978, sec. 38-3-2 . By execution of this Agreement, Contractor acknowledges and agrees to the jurisdiction of the courts of the State of New Mexico over any and all lawsuits arising under or out of any term of this Agreement.

19. **Workers Compensation.**

The Contractor agrees to comply with state laws and rules applicable to workers compensation benefits for its employees. If the Contractor fails to comply with the Workers Compensation Act and applicable rules when required to do so, this Agreement may be terminated by the City.

20. **Professional Liability Insurance.**

Contractor shall maintain professional liability insurance throughout the term of this Agreement providing a minimum coverage in the amount required under the New Mexico Tort Claims Act. The Contractor shall furnish the City with proof of insurance of Contractor's compliance with the provisions of this section as a condition prior to performing services under this Agreement.

21. **Other Insurance**

If the services contemplated under this Agreement will be performed on or in City facilities or property, Contractor shall maintain in force during the entire term of this Agreement, the following insurance coverage(s), naming the City as additional insured.

A. **Commercial General Liability** insurance shall be written on an occurrence basis and be a broad as ISO Form CG 00 01 with limits not less than $2,000,000 per occurrence and $2,000,000 in the aggregate for claims against bodily injury, personal and advertising injury, and property damage. Said policy shall include broad form Contractual Liability coverage and be endorsed to name the City of Santa Fe their officials, officers, employees, and agents as additional insureds.

B. **Business Automobile Liability** insurance for all owned, non-owned automobiles, with a combined single limit not less than $1,000,000 per accident.

C. **Broader Coverage and Limits.** The insurance requirements under this Agreement shall be the greater of (1) the minimum coverage and limits specified in this Agreement, or (2) the broader coverage and maximum limits of coverage of any insurance policy or proceeds available to the Named Insured. It is agreed that these insurance requirements shall not in any way act to reduce coverage that is broader or that includes higher limits than the minimums required herein. No representation is made that the minimum insurance requirements of this Agreement are sufficient to cover the obligations of Contractor hereunder.

D. Contractor shall maintain the above insurance for the term of this Agreement and name the City as an additional insured and provide for 30 days cancellation notice on any Certificate of Insurance form furnished by Contractor. Such certificate shall also specifically state the coverage provided under the policy is primary over any other valid and collectible insurance and provide a waiver of subrogation.

22. **Records and Financial Audit.**

The Contractor shall maintain detailed time and expenditure records that indicate the date;

time, nature and cost of services rendered during the Agreement's term and effect and retain them for a period of three (3) years from the date of final payment under this Agreement. The records shall be subject to inspection by the City. The City shall have the right to audit billings both before and after payment. Payment under this Agreement shall not foreclose the right of the City to recover excessive or illegal payments

23. **Indemnification.**

The Contractor shall defend, indemnify and hold harmless the City from all actions, proceeding, claims, demands, costs, damages, attorneys' fees and all other liabilities and expenses of any kind from any source which may arise out of the performance of this Agreement, caused by the negligent act or failure to act of the Contractor, its officers, employees, servants, subcontractors or agents, or if caused by the actions of any client of the Contractor resulting in injury or damage to persons or property during the time when the Contractor or any officer, agent, employee, servant or subcontractor thereof has or is performing services pursuant to this Agreement. In the event that any action, suit or proceeding related to the services performed by the Contractor or any officer, agent, employee, servant or subcontractor under this Agreement is brought against the Contractor, the Contractor shall, as soon as practicable but no later than two (2) days after it receives notice thereof, notify the legal counsel of the City.

24. **New Mexico Tort Claims Act**

Any liability incurred by the City of Santa Fe in connection with this Agreement is subject to the immunities and limitations of the New Mexico Tort Claims Act, Section 41-4-1, et. seq. NMSA 1978, as amended. The City and its "public employees" as defined in the New Mexico Tort Claims Act, do not waive sovereign immunity, do not waive any defense and do not waive any limitation of liability pursuant to law. No provision in this Agreement modifies or waives any provision of the New Mexico Tort Claims Act.

25. **Invalid Term or Condition.**

If any term or condition of this Agreement shall be held invalid or unenforceable, the remainder of this Agreement shall not be affected and shall be valid and enforceable.

26. **Enforcement of Agreement.**

A party's failure to require strict performance of any provision of this Agreement shall not waive or diminish that party's right thereafter to demand strict compliance with that or any other provision. No waiver by a party of any of its rights under this Agreement shall be effective unless express and in writing, and no effective waiver by a party of any of its rights shall be effective to waive any other rights.

27. **Notices.**

Any notice required to be given to either party by this Agreement shall be in writing and shall be delivered in person, by courier service or by U.S. mail, either first class or certified, return receipt requested, postage prepaid, as follows:

To the City:
Environmental Services Division Director (Current Shirlene E. Sitton),
1142 Siler Road
Santa Fe, NM 87507
sesitton@santafenm.gov

To the Contractor:
Joseph J. Tracy, INTERA Inc. Vice President
2440 Louisiana BLVD, NE, Suite 700
Albuquerque, NM 87110
jjarrard@huitt-zollars.com

28. **Authority.**

If Contractor is other than a natural person, the individual(s) signing this Agreement on behalf of Contractor represents and warrants that he or she has the power and authority to bind Contractor, and that no further action, resolution, or approval from Contractor is necessary to enter into a binding contract.

29. **Merger.**

This Agreement incorporates all the Agreements, covenants and understandings between the parties hereto concerning the subject matter hereof, and all such covenants, Agreements and understandings have been merged into this written Agreement. No prior Agreement or understanding, oral or otherwise, of the parties or their agents shall be valid or enforceable unless embodied in this Agreement.

30. **Non-Collusion.**

In signing this Agreement, the Contractor certifies the Contractor has not, either directly or indirectly, entered into action in restraint of free competitive bidding in connection with this offer submitted to the City's Chief Procurement Officer.

31. **Default/Breach.**

In case of Default and/or Breach by the Contractor, for any reason whatsoever, the City may procure the goods or services from another source and hold the Contractor responsible for any resulting excess costs and/or damages, including but not limited to, direct damages, indirect damages, consequential damages, special damages and the City may also seek all other remedies under the terms of this Agreement and under law or equity.

32. **Equitable Remedies.**

The Contractor acknowledges that its failure to comply with any provision of this Agreement will cause the City irrevocable harm and that a remedy at law for such a failure would

be an inadequate remedy for the City, and the Contractor consents to the City 's obtaining from a court of competent jurisdiction, specific performance, or injunction, or any other equitable relief in order to enforce such compliance. The City's rights to obtain equitable relief pursuant to this Agreement shall be in addition to, and not in lieu of, any other remedy that the City may have under applicable law, including, but not limited to, monetary damages.

33. **Default and Force Majeure.**

The City reserves the right to cancel all or any part of any orders placed under this Agreement without cost to the City, if the Contractor fails to meet the provisions of this Agreement and, except as otherwise provided herein, to hold the Contractor liable for any excess cost occasioned by the City due to the Contractor's default. The Contractor shall not be liable for any excess costs if failure to perform the order arises out of causes beyond the control and without the fault or negligence of the Contractor; such causes include, but are not restricted to, acts of God or the public enemy, acts of the State or Federal Government, fires, floods, epidemics, quarantine restrictions, strikes, freight embargoes, unusually severe weather and defaults of subcontractors due to any of the above, unless the City shall determine that the supplies or services to be furnished by the subcontractor were obtainable from other sources in sufficient time to permit the Contractor to meet the required delivery scheduled. The rights and remedies of the City provided in this Clause shall not be exclusive and are in addition to any other rights now being provided by law or under this Agreement.

IN WITNESS WHEREOF, the Parties have executed this Agreement as of the date of the signature by the required approval authorities below.

CITY OF SANTA FE:

John Blair
John Blair (Sep 25, 2023 11:24 MDT)

JOHN BLAIR, CITY MANAGER

DATE: Sep 25, 2023

CONTRACTOR:

Joseph J Tracy

JOSEPH J. TRACY

VICE PRESIDENT
TITLE

DATE: Aug 31, 2023
CRS#74-3010638

Registration #22 78 29

ATTEST:

KRISTINE BUSTOS MIHELCIC, CITY CLERK XIV

CITY ATTORNEY'S OFFICE:

Marcos Martinez

SENIOR ASSISTANT CITY ATTORNEY

APPROVED FOR FINANCES:

Emily K. Oster

Emily K. Oster (Sep 25, 2023 11:21 MDT)

EMILY OSTER, FINANCE DIRECTOR
Fund 510 Org 5100831 Object 510300

INTERA Incorporated
2460 Louisiana Blvd. NE, Suite 700
Albuquerque, NM 87110 USA
505.246.1600

August 25, 2023

Mr. Lawrence Garcia
Environmental Services Division (ESD)
ESD Fleet Manager
City of Santa Fe
1142 Siler Road
Santa Fe, New Mexico 87507

RE: Four Quarters of New Mexico Environment Department (NMED) Ground Water Quality Bureau (GWQB) Stage 1 Abatement Plan Monitoring and Reporting for the Former Frank Ortiz Landfill and Four Quarters of NMED Solid Waste Bureau (SWB) Monitoring and Reporting for the Paseo de Vista Landfill, Santa Fe, Santa Fe County, New Mexico – Contract Assignment

Dear Mr. Garcia,

INTERA Incorporated (INTERA) will extend the same cost for services via the City of Albuquerque Procurement Contract #SHR00022790 (Contract) which was approved on February 1, 2023 and will expire on January 1, 2027. The approval will provide the City of Santa Fe (City), groundwater monitoring, soil vapor monitoring and other environmental and engineering services for the City's two closed landfills sites (Former Frank Ortiz Landfill and Former Paseo de Vista Landfill). As you are aware, INTERA was under contract with the City for these services (Contract No. 19-0326; Munis Contract No. 3200917) which expired on June 30, 2023. INTERA has institutional knowledge of both landfills, and the regulatory requirements posed by both the NMED GWQB and the SWB which have jurisdiction of these closed landfills. The City of Albuquerque Procurement Contract No. SHR00022790 has a scope of work which meets the requirements for management of the GWQB and SWB regulations. The estimated amount utilizing the City of Albuquerque Procurement Contract to provide the required regulatory services for the City within Fiscal Year 24 is $240,489.01 (New Mexico Gross Receipts Tax of 8.1875% included).

Scope of Work

The locations of the landfills are shown on Figure 1. The activities listed below and detailed in Table 1 will be performed throughout the four consecutive quarters from the third quarter of 2023 through the second quarter of 2024 (FY 24). All Site work and report deliverables will be completed in accordance with amended work plan approved by the GWQB as detailed in the Site Sampling and Analysis and Quality Assurance Project Plan for Waste and Vadose Zone Characterization (Revision 3.0 dated November 6, 2019) and Stage 1 Abatement Plan Modification Surface Emissions Monitoring (SEM) Activities dated September 23, 2021. The proposed schedule for Site work and report deliverable development is detailed below.

Table 1

Quarter	Item Task	Deliverable
2023 3rd Quarter	• Surface Emissions Monitoring Event • Landfill Gas Monitoring Event	Letter Report with Figures and Tables summarizing SEM and LFG event results
2023 4th Quarter	• Surface Emissions Monitoring Event • Landfill Gas Monitoring Event • Groundwater Monitoring Event • Soil Vapor Collection Event	Report with Figures and Tables summarizing all field task results and evaluating Site conditions
2024 1st Quarter	• Surface Emissions Monitoring Event • Landfill Gas Monitoring Event	Letter Report with Figures and Tables summarizing SEM and LFG event results
2024 2nd Quarter	• Surface Emissions Monitoring Event • Landfill Gas Monitoring Event • Groundwater Monitoring Event • Soil Vapor Collection Event • Final Benchmark Settlement Report	Report with Figures and Tables summarizing all field task results and evaluating Site conditions

INTERA appreciates the opportunity to continue to work with ESD on this project. Please contact me at (505) 901-1184 or jtracy@intera.com with any questions.

Sincerely,
INTERA Incorporated

Joseph J. Tracy
Vice President/Principal Geologist

Enclosures:

- Figure 1 – Landfill Locations – Site Vicinity Map
- INTERA W-9
- INTERA Certificate of Insurance (COI)
- INTERA City of Santa Fe Business License

INTERA

EXHIBIT "A" 1 of 18

City of Albuquerque
Procurement Contract

INTERA INC
9600 GREAT HILL TRAIL STE 300W
AUSTIN TX 78759

James Joseph
605.240.1600 x1209
jjoseph@intera.com
psalter@intera.com

Supplier ID: 0000136272

Contract ID	[redacted]
Contract Dates	6/01/2008 - 5/31/2027
Contract Reference	[redacted]
Contract Maximum	$0.00
Contract Print Date	01/18/2023
Origin	SWD
Page 1 of 15	

Description: GHG and LFG Operations

ITEM #	ITEM DESCRIPTION	Category	QTY	UOM	UNIT PRICE
1	GHG Emissions NMED Methane Monitoring Project Manager $117.50 hourly Engineer $222.00 hourly Technician $126.00 hourly	96846	-	EA	0.00
2	GHG Emissions GHG Monitoring and Reporting Engineer $222.00 hourly	96846	-	EA	0.00
3	GCCS Monthly Monitoring Project Manager $117.50 hourly Engineer $222.00 hourly Technician $126.00 hourly	96846	-	EA	0.00
4	GCCS Quarterly Monitoring Project Manager $117.50 hourly Engineer $222.00 hourly Technician $126.00 hourly	96846	-	EA	0.00
5	GCCS Operations Monthly Balancing Project Manager $117.50 Engineer $222.00 Technician $126.00	96846	-	EA	0.00
6	GCCS Monthly Maintenance Project Manager $222.00 Technician $126.00	96846	-	EA	0.00
7	GCCS Quarterly Maintenance Project Manager $222.00 Technician $126.00	96846	-	EA	0.00
8	GCCS Monthly Reporting Project Manager $222.00	96846	-	EA	0.00
9	GCCS Quarterly Reporting Project Manager $222.00	96846	-	EA	0.00
10	GCCS Air Quality Semi-Annual Reporting Project Manager $222.00	96846	-	EA	0.00
11	GCCS Air Quality Annual Reporting Project Manager $222.00	96846	-	EA	0.00
12	GCCS Flare Performance Test in accordance with Authority to Construct and Title V Permit Project Manager $222.00 Engineer $222.00 Technician $126.00	96846	-	EA	0.00

Purchasing Office Signature:

City of Albuquerque
Procurement Contract

INTERA INC
9600 GREAT HILL TRAIL STE 380W
AUSTIN TX 75730

James Joseph
505.246.1600 x1209
jjoseph@intera.com
psalter@intera.com

Supplier ID: 0000186272

Contract ID	SHR000022780
Contract Dates	02/01/2022 - 01/31/2027
Contract Reference	RFB-2022-322-DSW-CG
Contract Maximum	$0.00
Contract Print Date	01/19/2022
Origin	SWD
Page 2 of 15	

13	GCCS Typical Repairs- Relocation of Temperature Probe on Flare Stack Project Manager $117.50 Engineer $222.00 Technician $126.00	98846	-	EA	0.00
14	GCCS Typical Repairs- Remove, Calibrate, Re-Install FCI ST-98-21CTO Flow Meter (or equivalent) (once per 18 months) Project Manager $117.50 Engineer $222.00 Technician $126.00	98846	-	EA	0.00
15	GCCS Typical Repairs- Remove and Send for Re-building (1) 40 HP Houston Service Industries 08108 Blower (or equivalent), Re-Install with New Belts Project Manager $222.00 Technician $126.00	98846	-	EA	0.00
16	GCCS Typical Repairs- Remove Old and Install New UV Flame Detector C7035A1031 (or equivalent) and/or Sensor Project Manager $125.00 Engineer $222.00 Technician $126.00	98846	-	EA	0.00
17	GCCS Typical Repairs- Remove, send for Rewinding, Re-Install (1) WEG Blower Motor Model 0438EP3E324T9 40HD (or equivalent) Project Manager $222.00 Engineer $222.00 Technician $126.00	98846	-	EA	0.00
18	GCCS Typical Repairs- Well Extension Project Manager $117.50 Engineer $222.00 Technician $126.00	98846	-	EA	0.00
19	GCCS *Emergency Response and Reporting - Regular Business Hours Project Manager $150.00 Engineer $236.01 Technician $133.97	98846	-	EA	0.00
20	GCCS *Emergency Response and Reporting - After Hours Project Manager $150.00 Engineer $236.01 Technician $133.97	98846	-	EA	0.00

Purchasing Office Signature:

City of Albuquerque
Procurement Contract

INTERA INC
9400 GREAT HILL TRAIL STE 300W
AUSTIN TX 78759

James Joseph
505.246.1600 x1200
jjoseph@intera.com
psaltar@intera.com

Supplier ID: 0000138272

Contract ID	SHR000022790
Contract Dates	02/01/2023 - 01/31/2027
Contract Reference	RFB-2022-323-DSW-CG
Contract Maximum	$0.00
Contract Print Date	01/19/2023
Origin	SWD
Page 3 of 15	

21	GCCS *Miscellaneous Tasks, Reporting and Meetings and/or Required Regulatory Follow Up Project Manager $150.00 Engineer $239.21 Technician $135.77	98848	-	EA	0.00
22	LFG Transmission Pipeline Routine Operation and Maintenance Project Manager $117.50 Engineer $222.00 Technician $126.00	98848	-	EA	0.00
23	LFG Transmission Pipeline Pipeline Patrolling/Leak Detection Surveys biannual patrolling annual leak detection Project Manager $222.00 Technician $126.00	98848	-	EA	0.00
24	LFG Transmission Pipeline Annual Reporting to the United States (US) Department of Transportation (DOT) Annual DOT/PSB Reporting Project Manager $222.00 Engineer $222.00	98848	-	EA	0.00
25	LFG Transmission Pipeline Annual Operations Review, Plan Updates, Training Pipeline Plan Review and Updates Project Manager $117.50 Engineer $222.00 Technician $126.00	98848	-	EA	0.00
26	LFG Transmission Pipeline Operator Training, Evaluation, Qualification Project Manager $117.50 Engineer $222.00 Technician $126.00	98848	-	EA	0.00
27	LFG Transmission Pipeline Pipeline Cleaning/Pigging in accordance with manual includes shut down, purging, pigging and start up Project Manager $117.50 Engineer $222.00 Technician $126.00	98848	-	EA	0.00
28	LFG Transmission Pipeline Abnormal Condition Response as defined by NMPRC Project Manager $124.92 Engineer $236.01 Technician $133.95	98848	-	EA	0.00

Purchasing Office Signature:

City of Albuquerque
Procurement Contract

INTERA INC
[redacted] GREAT HILL TRAIL STE 350W
AUSTIN TX 78759

James Joseph
505.246.1600 x1209
jjoseph@intera.com
psalter@intera.com

Supplier ID: 0000136272

Contract ID	[redacted]
Contract Dates	02/01/2023 - 01/31/2027
Contract Reference	RFB-[redacted]
Contract Maximum	$0.00
Contract Print Date	01/[redacted]
Origin	SWD
Page 4 of 15	

29	LFG Transmission Pipeline *Emergency Response and Reporting - Regular and After Business Hours Project Manager $124.92 Engineer $236.01 Technician $133.95	88846	-	EA	0.00
30	LFG Transmission Pipeline *Miscellaneous Tasks, Reporting and Meetings and/or Required Regulatory Follow Up Project Manager $126.61 Engineer $239.21 Technician $135.77	88846	-	EA	0.00
31	Non Labor Expenses for all tasks	88846	-	EA	0.00

Title: Greenhouse Gas (GHG) and Landfill Gas (LFG) Operations, Maintenance and Monitoring at the Albuquerque Cerro Colorado Landfill (CCFL)

Term: 02/01/2023 - 01/31/2027

The City of Albuquerque shall enter into a contract for Greenhouse Gas (GHG) Emissions Monitoring and Reporting; Landfill Gas (LFG) Collection and Control System (GCCS) Operations, Maintenance, Monitoring, Reporting, Performance Tests, Repair and Emergency Response; LFG Transmission Pipeline Operations, Maintenance, Monitoring, Testing, Reporting, Plan Review, Updates, Training, Pigging, Repair and Emergency Response; Leachate Management Monitoring, Maintenance and Reporting, and Ground Water Sampling at the City of Albuquerque Cerro Colorado Landfill (CCFL); - in accordance with the terms, conditions, and specifications set forth herein.

Non-Labor Expenses shall be allowed and applied for each group of tasks at cost.

Anytime parts or materials must be purchased or equipment rented, repaired or replaced, or subcontractors must be hired, contractor will bill City at cost.

This contract is subject to the Code of Federal Regulations. To view the Code of Federal Regulations, go to: www.ecfr.gov

Intera Inc. shall provide services required for:
- Greenhouse Gas (GHG) Emissions - Monitoring and Reporting.
- Landfill Gas (LFG) Collection and Control System (GCCS) - Operation, maintenance, monitoring, reporting, performance testing, repair and emergency response for the LFG GCCS to include the landfill open flare and all attached equipment.
- Landfill Gas (LFG) Transmission Pipeline - Operation, maintenance, monitoring, testing, reporting, plan review, updates, training, pigging, repair and emergency response for the LFG Transmission Pipeline.

Purchasing Office Signature:

City of Albuquerque
Procurement Contract

INTERA INC
9600 GREAT HILL TRAIL STE 300W
AUSTIN TX 78759

Contract ID	SHR000022799
Contract Dates	02/01/2023 - 01/31/2027
Contract Reference	RFS-2022-322-DSW-CG
Contract Maximum	$0.00
Contract Print Date	01/10/2023
Origin	SWD
Page 5 of 15	

James Joseph
505.246.1600 x1200
jjoseph@intera.com
psalter@intera.com

Supplier ID: 0000139272

Intera Inc shall perform all required monitoring and reporting necessary to prevent any non-compliance with applicable federal, state, and local regulations or pose a health or safety threat to the public or staff. Applicable federal regulations shall specifically include the requirements specified under 40 CFR Parts 60, 62 and 98 and 40 CFR 191 and 192.

GREENHOUSE GAS (GHG) EMISSIONS MONITORING AND REPORTING
The CCLF is subject to the provisions in 40 CFR 98 Subpart HH - "Mandatory Reporting of GHG for Municipal Solid Waste Landfills". The CCLF currently operates under a GHG Monitoring Plan written and submitted March 31, 2010, to demonstrate compliance with 40 CFR 98.3(g) (5). In addition to the landfill emissions, the plan identifies several stationary sources at the CCLF that require reporting under 40 CFR 98, including, but not necessarily limited to, the flare station pilot, propane heaters at the landfill office trailers and the heavy equipment shop. Annual fuel usage at these identified sources is recorded and maintained for use in calculating annual GHG Emissions for each combustion source. Per 40 CFR 98.30, none of these sources fall under the current combustion source reporting requirements (flares are categorically exempted and portable sources are not required to report).

Intera Inc shall be responsible for:.
Quarterly methane monitoring using barhole probes in accordance with the Cerro Colorado Landfill's New Mexico Environment Department (NMED) approved Landfill Gas Monitoring Plan (Permit # SWM-010221, SWM-010221(SP), Volume II B, Section 6). In general, monitoring involves measuring methane levels from twelve (12) points along active cell perimeters and within six (6) structures located on landfill property using an appropriate portable gas analyzer.

All monitoring and reporting as outlined in the facility GHG Monitoring Plan and in accordance with any updates in protocols or procedures pursuant to 40 CFR 98 Subpart HH. Calculations of modeled methane generation will include:

Modeled methane generation (98.343(a)). Quantities of methane recovered for destruction (98.343(b)). Calculated methane emissions including flare destruction (98.343(c). Calculated carbon dioxide, methane, and nitrous oxide emissions for general stationary fuel combustion sources (98.33(a) (1), (c) (1). Quality assurance of GEM 2000 (or equivalent) in accordance with 98.344(b) (6) (ii)-Annual Calibration for NMOC. Quality assurance of the Open Flare via one of the methods listed 40 CFR 98.344(b)

The issuance and quality assurance of all reports issued directly to EPA under the provisions of 40 CFR 98 Subpart HH. All reporting, both emissions and quality assurance, shall comply with the specific requirements of the EPA Region governing GHG Monitoring, and shall comply with the written GHG site specific Monitoring Plan. Two (2) hard copies and electronic versions of all reports shall be provided to the CCLF upon issuance to EPA. The annual GHG data is required to be submitted directly into the EPA eGRT (electronic Greenhouse Gas Reporting Tool). Coordination with the SWMD eGRT signatory authority is required to electronically sign and submit the report.

Purchasing Office Signature:

City of Albuquerque
Procurement Contract

INTERA INC
6600 GREAT HILL TRAIL STE 300W
AUSTIN TX 78759

Contract ID	SHR000022790
Contract Dates	02/01/2023 - 01/31/2027
Contract Reference	RFB-2022-322-DSW-CG
Contract Maximum	$0.00
Contract Print Date	01/19/2023
Origin	SWD
Page 6 of 15	

James Joseph
505.246.1590 x1209
jjoseph@intera.com
psalter@intera.com

Supplier ID: 0000138272

LFG COLLECTION AND CONTROL SYSTEM (GCCS)

Detailed Description

At this time, the GCCS at the CCFL consists of 58 vertical extraction wells 5 horizontal collectors and 6 leachate risers.

The landfill flare station currently in use is an LFG Specialties model PCF103018, equipped with a knock off pot, actuator valve, two (2) 40 hp. blowers with adjusting butterfly valves, flow meter, Varec flame arrestor, pilot gas system, flare stack, and a Flame Trol III control center.

Expansion of the system may be necessary dependent upon emissions and applicable Air Quality regulations. A contingency has been developed and involves three (3) horizontal collectors, each approximately 1,000 feet long.

GCCS Monitoring

The Intera Inc. shall provide the required instrumentation (Gastech or Landtec GEM 5000 or equivalent) for ongoing gas analysis and data collection of the LFG system at the CCLF.

GCCS Monthly Monitoring:

As per 40 CFR Part 60 once each month the LFG collection wells shall be monitored for methane, oxygen, carbon dioxide, temperature and flow rate and shall be balanced. Appropriate adjustments shall be made and wells requiring correction shall be re-monitored as necessary to facilitate system compliance and assure adequate overall performance of the system, as outlined under 40 CFR Part 60. Visual determination of fugitive emissions from the flare shall be monitored monthly using EPA¿s Method 22. At the same time, record equipment hours and usage for emission units listed in Section 2, Tables 4 and 5 of Title V Permit # 0537-M1-RN1 as applicable.

GCCS Quarterly Monitoring:

(Once every three [3] months): Surface and cover penetration monitoring of the applicable portions of the CCFL shall be accomplished using either a flame ionization detector or a photo ionization detector as specified under 40 CFR 60. Areas of elevated readings shall be recorded and appropriate reporting and remediation implemented in shall order to assure ongoing compliance with any federal, state, or local regulations or established conditions. The surface emissions monitoring shall be conducted along a design pattern that traverses the landfill surface along 30 meter intervals, but only in those areas with waste in place that is more than (5) years in age.

GCCS Operation

Monthly: At least once every 30 days adjustments must be made to the flow rate at each of the LFG extraction wells based on the information obtained during monitoring of the individual wells and at the flare station itself. Adjustments shall ensure that LFG will be collected at a rate that maintains a negative gauge pressure vacuum at all wellheads without an increase in oxygen, per 40 CFR 60.751. As specified in the federal regulations, the parameters of concern are LFG composition, LFG pressure and/or vacuum, wellhead temperature, and flow velocity. Adjustments to the vacuum and subsequent flow rate at the flare station are also required in order to maintain correct balance with the extraction system.

The primary purpose of the extraction

Purchasing Office Signature:

INTERA INC
9600 GREAT HILL TRAIL STE 300W
AUSTIN TX 78759

James Joseph
505.246.1500 x1209
jjoseph@intera.com
psailer@intera.com

Contract ID	SHR000022789
Contract Dates	02/01/2023 - 01/31/2027
Contract Reference	RFB-2022-022-DSW-CG
Contract Maximum	$0.00
Contract Print Date	01/11/2023
Origin	SWD

Supplier ID: 0000136272

monitoring and balancing is to minimize landfill surface, cover penetration emissions, and control the possible off-site migration of LFG in order to maintain regulatory compliance. All additional adjustments required to meet the requirements outlined in the applicable CFR's must be completed in a timely fashion and must demonstrate compliance with the applicable regulations. The awarded offeror must have experience with the new provisions and the 5/15 day rules as established under the revised and updated CFR.
GCCS Maintenance

Monthly: Intera Inc. shall conduct visible inspection of all system components, to include wellheads, exposed lines, valves and port connections, and the flare system itself. Any problems noted should be immediately reported to the appropriate landfill staff, along with recommendations for repair and/or any problems noted should be immediately reported to the appropriate landfill staff, along with recommendations for repair and/or repair and replacement as needed. The contractor shall insure the proper operation of the Flame Trolill Control Center and all other flare components. Contractor shall change the flare chart recorder paper a minimum of four (4) times per month and lubricate the bearings on each of the blowers twice per week, or eight (8) times per month using only the manufacturers recommended lubricant. NOTE: The Landfill POC information will be provided at the time of award.

Quarterly: The Intera Inc. shall be responsible for the following:
Monitoring the pressure drop across the mist extraction pad at maximum LFG flow, and clean the pad when the pressure drop has increased to twice the normal pressure drop for the clean pad condition.

Insure proper operation of the pneumatic valve actuator. Lubricate actuator and valve mechanism per manufacturer's recommendations.

Start the non-operating blower monthly to prevent motor or bearing freeze up.

Inspect the operational blower, listening for unusual noises and feeling for abnormal vibrations or excessive heat.

Ensure bearings on each of the blowers are lubricated as mentioned above, using only the manufacturers recommended lubricant.

Check the pressure drop across the flame arrestor. If the pressure drop exceeds two (2) inches of water column at maximum LFG flow, then the flame arrestor must be cleaned according to manufacturer's recommendations.

Insure the proper operation of the propane fuel pilot ignition system, including removal and replacement of empty propane tanks, as needed.

Inspect the condition of the UV Flame detector and replace the detector if damaged or not properly functioning.

Adjust the burner tip orifice to stabilize flare operation, as required. Confirm the calibration of the thermal flow

Purchasing Office Signature:

INTERA INC
9600 GREAT HILL TRAIL STE 300W
AUSTIN TX 78759

Jason Joseph
512.346.1620 x1209
jjoseph@intera.com
pschaefer@intera.com

Supplier ID: 0000120272

Contract ID	BHR800022790
Contract Dates	02/01/2022 - 01/31/2027
Contract Reference	RFB-2022-322-DSW-CC
Contract Maximum	$0.00
Contract Print Date	01/19/2022
Origin	SWD

center, using an independent Pitot tube. Inspect the control panel and test indicator lights for proper operation, and replace bulbs as required.

GCCS Reporting
All reporting shall conform to the requirements established under 40 CFR Part 63.
Monthly Reporting: The Intera Inc. shall prepare a detailed report for the City of Albuquerque Solid Waste Management Department (SWMD) containing the emissions data collected during the previous month, and a summary of the activity performed during the previous month. Two (2) hard copies of the report and an electronic version shall be provided to the SWMD, and the information maintained on a contractor database in order to appropriately track any long term trends in the LFG collection system that would justify future operation modifications or additions. An ongoing log should be maintained of each inspection and site visit, with details of any deficiencies discovered and actions taken to remedy the problems.

Quarterly Reporting: The Intera Inc. shall prepare a detailed report for the SWMD containing the data collected during the required surface and cover penetration monitoring, to include instrument calibration and a monitoring log, along with appropriate weather data and other information, as required. The report shall include all maintenance done during the previous quarters, including checks of all the system components. Two (2) hard copies of each of these reports and an electronic version shall be provided to the SWMD, and the information maintained on a contractor held database in order to appropriately track any long term trends in the surface monitoring and/or repairs and maintenance.

Air Quality Semi-Annual Reporting: Prepare and submit emission unit reports and the Certified Compliance Progress Report semi-annually in accordance with Albuquerque/Bernalillo County Air Quality Control Board Title V Operating Permit #0537-M1-RN1 .

Air Quality Annual Reporting: Prepare and submit the Annual Compliance Certification and Emissions Inventory Report in accordance with Albuquerque/Bernalillo County Air Quality Control Board Title V Operating Permit #0537-M1-RN1 and the EPA Air Quality Regulations.

Performance Tests
Flare Performance Test: Within 365 days of the previous flare performance test, Bidder shall, on an annual basis, conduct a flare performance test in accordance with the Authority to Construct and Title V Permit Operating Permit #0537-M1-RN1 . Task includes submission of the protocol, required notification as prescribed, and report preparation and timely submission to the governing authority/ies. Two (2) hard copies of this report and an electronic version shall be provided to the SWMD, and the information maintained on a contractor held database in order to appropriately track any long term trends in the flare performance.

GCCS Typical Repairs
- Relocation of Temperature Probe on Flare Stack
- Remove, calibrate, and re-install (once per 18 months) an FCI ST-95-21 CTO flow meter (or equivalent)
- Remove and send for re-building one (1) 40 HP Houston

Purchasing Office Signature:

INTERA INC
[redacted] GREAT HILL TRAIL STE 300W
AUSTIN TX 7873[redacted]

James Joseph
[redacted].246.1600 x1209
jjoseph@intera.com
psalter@intera.com

Supplier ID: 0000138272

Contract ID	[redacted]
Contract Dates	[redacted] - 01/31/2027
Contract Reference	RFB-2022-322-DSW-CC
Contract Maximum	$0.00
Contract Print Date	01/[redacted]
Origin	DWD

- Service Industries 85103 Blower (or equivalent), re-install with new belts
- Remove old and install new UV Flame Detector C7035A1001 (or equivalent) and/or sensor
- Remove, send for re-winding, re-install one (1) WEG blower motor Model [redacted] 40HP (or equivalent)
- GSSC wall extension, resume electrofusion welding

Emergency Response, Reporting and Corrective Action
The Intera Inc. shall be able to respond within a 24-hour time frame to address any issues and/or repairs to the GCCS and flare and associated reporting requirements. This includes trouble shooting or corrective action required on any part of the system to be maintained as listed under Part Be 3, Section B. A contact list shall be provided at the time of the award, with appropriate phone numbers in order for limited staff to call for assistance, as needed.

Miscellaneous Tasks, Reporting, And Meetings

Gas Control and Collection Systems are highly regulated and typically develop needs that have not been anticipated during the planning and construction process. To address unanticipated needs, this task was developed to ensure a mechanism is in place for Bidder to assist with, but not be limited to, miscellaneous meetings, the development of reports or additional plans, responses to expansions or changes in regulatory conditions.

The bidder shall submit an hourly billing rate for any technicians or engineer's time that the contractor feels might be necessary to facilitate trouble shooting, corrective action to include required repairs, and associated reporting for any portion of the GCCS.

LFG TRANSMISSION PIPELINE

The LFG Transmission Pipeline is approximately two (2) miles long and is used to convey treated LFG treated from the CCLF to the Metropolitan Detention Center (MDC) where it is used as a fuel source to fire boilers providing hot water and comfort heat.

Routine Operation and Maintenance (O&M):
Routine O&M includes primarily the infrastructure at the compression skid. It includes weekly site visits to confirm proper operation and check for "abnormal conditions". Routine O&M is assumed to include the following activities.
- Weekly site visits to the compression skid to review and record systems parameters, bi-weekly visits to grease components
- Cleaning/changing the filters on the condensate knock out vessels
- Adding and/or changing the glycol coolant
- Lean y-strainers
- Change oil (every three months)
- Check belt tension and replace belts as needed.
- Maintain standing water in dip trap
- Calibrate flow meters

Purchasing Office Signature:

INTERA INC
9600 GREAT HILL TRAIL STE 300W
AUSTIN TX 78759

James Joseph
512.346.1600 x1209
jjoseph@intera.com
psaha@intera.com

Contract ID	[illegible]
Contract Dates	[illegible] - 01/31/2027
Contract Reference	RFP-2022-322-DSW-CC
Contract Maximum	$0.00
Contract Print Date	01/19/2023
Origin	SWD
Page 10 of 16	

Supplier ID: 0000118372

- Clean air filters
- Download electronic chart recorder data and transmit it to the SWMD.
- Measure and document LFG quality with LFG analyzer
- Confirm proper interlocks with LFG flare skid
- Confirm proper functioning of alarm interlock
- Inspect steel piping (every three years) and complete report form
- Check cathodic protection system (annually) and complete report form
- Evaluate odorization of LFG and complete report form
- Pressure relief valve inspection and testing (annually) and complete report form
- Valve inspections and testing (annually) and complete report form
- Driving inspection of the pipeline route to check surface conditions, check for exposed sections of buried pipe, and confirm that pipe markers are in place and in good condition (every two weeks)
- Provide manufacturer support of the compression skid, as needed

The deliverable to the SWMD for this task shall be completion of the above specified items and conveyance of recorded/downloaded data and report forms on a monthly basis.

Pipeline Patrolling and Leak Detection Surveys

Pipeline patrolling and leak detection surveys will be performed as specified in sections 2.5 (49 CFR 192.614) and 3.2 of the O&M manual. The manual calls for biannual pipeline patrolling and annual leak detection surveys. The Bidder will walk the pipeline route during these events and complete the report form(s). Inspections will include listening for leaks, looking for subsidence, stressed vegetation, rilling/erosion, exposed pipeline, evidence of heavy traffic in areas other than identified in the O&M manual, and the detection of LFG (during the leak detection survey). The leak detection survey will be conducted with a flame ionization detector (FID) designed to meet the sensitivity requirements of the regulations. The FID will be calibrated in the field before each use. More frequent driving inspections of the pipeline are to be performed under the Routine O&M task above.

Annual Reporting to the United States (US) Department of Transportation (DOT)

An annual report must be submitted to the US DOT on or before March 15th each year. The report must be prepared using the DOT's form no. PHMSA 7100.2-1. On behalf of the SWMD, Bidder will complete the report form and transmit it electronically to the SWMD for review, and for submission, must coordinate with SWMD Point of Contact (POC) for the City's Executive electronic signature.

Annual Operations Review, Plan Updates, And Training

This task includes the review of the O&M, Emergency Response, Integrity Management, Public Awareness and Operator Qualification Plans and amendments as needed to address changing conditions, changes in regulation and/or necessary improvements. Bidder will provide annual training to qualify, requalify and evaluate operators in accordance with the Operator Qualification Plan. Most of the re-qualifications are on two-year cycles, however, an annual budget should be planned to allow for regular evaluations of qualified

Purchasing Office Signature:

INTERA INC
9600 GREAT HILL TRAIL STE 300W
AUSTIN TX 78759

James Joseph
[illegible].1600 x1209
jjoseph@intera.com
psalter@intera.com

Contract ID	SHR000022790
Contract Dates	02/01/2023 - 01/31/2027
Contract Reference	RFB-2022-322-DSW-CG
Contract Maximum	$0.00
Contract Print Date	01/18/2023
Origin	SWD
Page 11 of 18	

Supplier ID: 9000136272

operators and training of new staff (as required). Bidder shall include costs associated with the development and implementation of the drug testing for select Bidder employees as required by US DOT. Bidder shall also provide Public Awareness notices as required by the Public Awareness Plan.

Pipeline Cleaning

The 12-inch-high density polyethylene (HDPE) LFG transmission pipeline is constructed with pigging stations for the periodic cleaning of the pipeline. This task is designated "as needed". It is anticipated that the pipeline will not require cleaning more than twice during the term of this contract. Cleaning of the pipeline will be in accordance with the O&M manual and will include:

- Shutdown of the compression skid and pipeline (section 2.2.5 of the O&M manual).
- Purging of the pipeline in accordance with Appendix D of the O&M manual.
- Pigging of the line with a polyurethane pig.
- Start up and system monitoring to ensure proper operation.

Abnormal Condition Response

The pipeline and compression skid are designed to operate within normal specified ranges. When the system operates outside of these ranges, an "abnormal condition" is identified. The O&M manual identifies a list of abnormal conditions including:

- Low suction pressure at the LFG conditioning skid
- Low discharge pressure at the LFG conditioning skid.
- High discharge pressure at the LFG conditioning skid.
- Low inlet pressure at the MDC.
- High oxygen content.
- High LFG condition skid knockout pot level.
- Fire alarm at MDC.
- Methane alarm at MDC.

Identification of these conditions or notification by the MDC or SWMD of existing conditions at the MDC and of the pipeline will trigger a response as prescribed in the O&M manual. Bidder will identify and correct the condition within the scope of the contract. Once the condition has been corrected, the system will be checked daily for 5 days in accordance with 48 CFR 192.605. Intera Inc. will complete report forms and evaluation of operation as needed to develop a budget for this task, Bidder will assume one abnormal condition event each year.

Emergency Response and Reporting

This task pertains to conditions that are more extreme than or not included in the Abnormal Conditions identified above. An emergency response would be triggered by the detection of a leak, damage to the pipeline, or damage to any other portion of the infrastructure that could result in the need of an immediate

Purchasing Office Signature:

INTERA INC
9600 GREAT HILL TRAIL STE 300W
AUSTIN TX 78759

James Joseph
(704)843.1600 x1269
jjoseph@intera.com
psalter@intera.com

Contract ID	SHR000022780
Contract Dates	02/01/2023 - 01/31/2027
Contract Reference	RFB-2022-322-DSW-CG
Contract Maximum	$0.00
Contract Print Date	01/18/2023
Origin	SWD
Page 12 of 18	

Supplier ID: 0000138272

reaction to protect the safety of the public or SWMD personnel and contractors. The task also includes the completion of a US DOT incident report form for the SWMD to submit electronically to the US DOT.

Miscellaneous Tasks, Reporting, And Meetings

Gas transmission lines are highly regulated and typically develop needs that have not been anticipated during the planning and construction process. To address unanticipated needs, this task was developed to ensure a mechanism is in place for Bidder to assist with, but not be limited to, miscellaneous meetings, the development of reports or additional plans, responses to expansions or changes in regulatory conditions, and issues regarding delivery to the MDC.

INTERA INC. MAY BE TASKED WITH ADDITIONAL RESPONSIBILITIES ON A TIME AND MATERIAL BASIS:

Leachate Management
In accordance with the Cerro Colorado Landfill's New Mexico Environment Department (NMED) approved Leachate Management Plan (Permit # SWM-010221, SWM-010221(SP), Volume II B, Section 7), inspect leachate pond, manholes and pumps monthly. Monitor leachate production, measure and record volume and flow rates quarterly. Collect leachate samples annually. Prepare quarterly reports for submission to NMED that summarize flow rates and the volume of leachate pumped, disposal methods and disposal locations. Prepare also for submission to NMED an annual report of the sampling event that includes, but is not limited to, a summary of the event, a description of the methods used for leachate sampling, figures, tables, results, a narrative discussion, and a conclusion.

Check landfill weather station and rain collector for water and/or dust accumulation and clean as needed. Monitor software and data output, download data regularly and maintain files.

Groundwater Sampling
On an annual basis and in accordance with the CDM Smith's 2010 City of Albuquerque Cerro Colorado Groundwater Monitoring and System Plan, four monitor wells will be sampled and depth to ground water measured in each. Ensure laboratory data is sent to engineers on contract timely for NMED Solid Waste Bureau (SWB) annual reporting.

New Mexico Environment Department (NMED) Solid Waste Annual Reports
Perform quarterly inspections of all four solid waste facilities.
When Eagle Rock Convenience Center sump tank is full (two to four times/year), collect and submit wash water samples for total dissolved solids (TDS), chloride, volatile organic compounds (VOC) using EPA method 8260, semi-volatile organics using EPA method 8270C, and metals using EPA method 7060A or 6010B analyses by on call environmental laboratory. Compare the analytical results to the New Mexico Administrative Code (NMAC) 20.6.2.3103 groundwater standards and identify any analytes on the NMAC 20.6.2.7.T.2 toxic pollutants list that exceed groundwater standards and/or the toxic pollutants list. Determine if water is usable at CCLF for dust control and submit as part of the annual reports to NMED.

Purchasing Office Signature:

City of Albuquerque
Procurement Contract

INTERA INC
9000 GREAT HILL TRAIL STE 300W
AUSTIN TX 78759

Jones Joseph
505.246.1600 x1209
jjoseph@intera.com
pcaller@intera.com

Contract ID	**SHR000022780**
Contract Dates	**02/01/2023 - 01/31/2027**
Contract Reference	**RFB-2023-328-DSW-CC**
Contract Maximum	**60.00**
Contract Print Date	**01/19/2023**
Origin	**SWD**
Page	**13 of 16**

Supplier ID: 1000136272

Preparation and timely submission of Solid Waste and Scrap Tire Hauler Annual reports.
Assist with records compilation and provide support during any NMED SWB solid waste facility inspection.

Stormwater
Monthly inspections, reporting and revisions in accordance with the Multi-Sector General Permit (MSGP) and the Stormwater Pollution and Prevention Plans (SWPPP).

Field and/or Administrative Work
Data collection or compilation required to meet any regulatory commitment.

Department Contacts:
Stephanie Phillips 505-7918152 sphillips@cabq.gov
Daniele Berardelli 505-761-4326 dberardelli@cabq.gov

Alternate Intera Inc. Contact:
Joe Tracy jtracy@intera.com

Purchasing Office Signature:

City of Albuquerque
Procurement Contract

INTERA INC
9600 GREAT HILL TRAIL STE 300W
AUSTIN TX 78759

James Joseph
505.246.1600 x1200
jjoseph@intera.com
psalter@intera.com

Supplier ID: 0000136272

Contract ID	SHR000022790
Contract Dates	02/01/2023 - 01/31/2027
Contract Reference	RFB-2023-322-DSW-CG
Contract Maximum	$0.00
Contract Print Date	01/19/2023
Origin	SWD

Instructions to Supplier:

- Do not fill orders for goods/services not listed in this Procurement Contract.
- Orders against this Procurement Contract must be placed with a Purchase Order Release (POR).
- Do not fill orders without a POR.
- POR number must be on all invoices.

Please forward all original invoice(s) to:
City of Albuquerque
Accounting Division
PO Box 1985
Albuquerque, NM 87103

For information on invoicing and payments, please visit: https://www.cabq.gov/dfa/accounting/how-do-i-get-paid

Instructions to End-User:
Do Not place orders for goods/services not listed on this Procurement Contract.
To place an order against this Procurement Contract, issue a POR prior to placing the order with the Supplier.

Purchasing Office Signature:

CITY OF ALBUQUERQUE TERMS AND CONDITIONS

Direct all inquiries to: City of Albuquerque, Purchasing Division, P.O. Box 1293, Albuquerque, NM 87103 or call (505) 768-8888.

1. **Contract:** By commencing work, vendor accepts all Terms and Conditions herein and agrees that, to the extent vendor terms conflict, these Terms and Conditions shall govern. These Terms and Conditions and any non-conflicting vendor terms and conditions shall constitute the Contract.

2. **Invoicing:** Department name AND purchase order number MUST be on all invoices, packing slips, shipping notices, freight bills, and correspondence concerning the order. Send invoice original and duplicate to: Accounting, P.O. Box 1293, Albuquerque, NM 87103.

3. **Payment:** City's payment terms are net 30 days unless otherwise stated. City shall not pay late fees, finance fees, or collection fees. Any vendor that accepts payments by credit card on behalf of City must be Payment Card Industry Data Security Standard compliant.

4. **FOB Destination and Inspection:** The risk of loss, injury and destruction, and legal title to the goods remains with vendor until the goods reach the location of the City. All goods delivered are subject to inspection upon receipt by City. Department's count will be accepted by vendor as final and conclusive on all shipments not accompanied by a packing slip. All rejected goods shall remain the property of vendor and will be returned at vendor's expense.

5. **Taxes:** Vendor is responsible for determining whether taxes are applicable to the order and for payment of the tax. Applicable taxes are to be included in each invoice due and may not be billed more than sixty (60) days after providing the goods or services to which the taxes apply.

6. **Warranty:** Vendor warrants that the goods and services furnished shall (a) conform to the specifications; (b) be free from defects in materials and workmanship; (c) be suitable for the purpose intended; (d) be new and of most current production; (e) be free from security interests or liens; and (f) not infringe upon or violate any copyrights or patent rights.

7. **Insurance:** Vendor agrees to comply with its state's law pertaining to workers' compensation benefits for its employees. If vendor fails to comply with the applicable workers compensation law when required to do so, the Contract may be terminated by City. Vendor also agrees to procure and maintain the insurance in [redacted] and any additional insurance coverage requested by City.

8. **Default:** City reserves the right to cancel all or any part of the Contract without cost to the City if vendor fails to meet the provisions of the Contract and, and except as otherwise provided herein, to hold Vendor liable for any excess cost incurred by City due to vendor default.

9. **Force Majeure:** Neither Vendor nor City shall be liable for failure to perform its obligations under the Contract due to causes beyond the control and without the fault or negligence of either party. Such causes include, but are not restricted to, acts of God or the public enemy, acts of the State or federal government, fire, flood, epidemics, quarantine restrictions, strikes, freight embargoes, unusually severe weather and delinks of subcontractors due to any of the above, unless City shall determine that the supplies or services to be furnished by the subcontractor were obtainable from other sources in sufficient time to permit vendor to meet the required delivery scheduled. The rights and remedies of the City provided in this paragraph shall not be exclusive and are in addition to any other rights now being provided by law or under the Contract.

10. **Termination for Lack of Appropriations:** Notwithstanding any provision in the Contract to the contrary, payments hereunder are contingent upon the Albuquerque City Council making the necessary appropriations. If sufficient appropriations are not made, the Contract may be terminated at the end of City's then current fiscal year upon written notice given by City to vendor. Such event shall not constitute an event of default and all payment obligations of City and all of its interest in the Contract will cease upon the date of termination. City's determination regarding appropriation shall be accepted by vendor and shall be final.

11. **Termination for Convenience:** City may terminate the Contract at any time by giving at least 30 days' written notice to the Vendor. In such event, vendor shall be paid under the terms of the Contract for all goods and/or services provided to and accepted by City, if ordered or accepted by City prior to the effective date of termination.

12. **Contract Changes:** In no case shall the Contract be changed without the prior written approval of City's Chief Procurement Officer.

13. **Assignment:** Neither the Contract, nor any interest therein, nor claim thereunder, shall be assigned or transferred by vendor, except as expressly authorized in writing by City's Chief Procurement Officer or designee. No such assignment or transfer shall relieve vendor from the obligations and liabilities under the Contract.

14. **City Furnished Property:** City furnished property shall be returned to City upon request in the same condition as received except for ordinary wear, tear, and modifications ordered hereunder.

15. **Indemnity:** Vendor agrees to defend, indemnify and hold harmless City from any and all claims, actions, suits or proceedings brought against City because of any injury or damage received or sustained by any person or property arising out of or resulting from the Contract or by reason of any asserted act or omission, neglect or misconduct of vendor or its agents or employees or any subcontractor or its agents or employees. This indemnity shall not be limited by reason of the specification of any particular insurance coverage in the Contract. City shall not indemnify vendor.

16. **Debarment, Suspension, Ineligibility and Exclusion Compliance:** Vendor certifies (a) that it has not been debarred, suspended or otherwise found ineligible to receive funds by any agency of the executive branch of the federal government, the State of New Mexico, any local public body of the State, or any state of the United States; and (b) should any notice of debarment, suspension, ineligibility or exclusion be received by vendor, vendor will notify City immediately.

17. **Conflict of Interest:** No officer, agent or employee of City will participate in any decision relating to the Contract which affects that person's financial interest, the financial interest of his or her spouse or minor child or his financial interest of any business in which he or she has a direct or indirect financial interest.

18. **Interest of Contractor:** Vendor agrees that it presently does not have, and shall acquire no direct or indirect interest which conflicts in any manner or degree with the performance of the terms of the Contract. Vendor will not employ any person who has any such conflict of interest to assist Vendor in performing the services.

19. **No Collusion:** Vendor represents that it has entered into the Contract without collusion on the part of Vendor with any person or firm, without fraud and in good faith. Vendor also represents that no gratuities, in the form of entertainment, gifts or otherwise, were, or during the term of the Contract, will be offered or given by vendor or any agent or representative of vendor to any officer or employee of the City with a view towards securing the Contract or for securing more favorable treatment with respect to making any determinations with respect to performing the Contract.

20. **Audits and Inspections:** At any time during normal business hours and as often as City may deem necessary, there shall be made available to City for examination all of vendor's records with respect to all matters covered by the Contract. Vendor shall permit City to audit, examine, and make excerpts or transcripts from such records, and to make audits of all contracts, invoices, materials, payrolls, records of personnel, conditions of employment and other data relating to all matters covered by the Contract. Vendor understands and will comply with City's Accountability in Government Ordinance, §2-10-1 et seq., and Inspector General Ordinance, §2-17-1 et seq. R.O.A. 1994, and also agrees to provide requested information and records and appear as a witness in hearings for City's Board of Ethics and Campaign Practices pursuant to Article XII, Section II of the Albuquerque City Charter.

21. **Compliance With Ethics Provisions:** Vendor certifies that it has not, either directly or indirectly, entered into action in restraint of free competitive bidding and is in compliance with the Ethical Conduct provisions of City's Public Purchases Ordinance, §-5-62 R.O.A. 1994.

22. **Non-discrimination:** In performing the Contract, vendor shall comply with the Federal Civil Rights Act of 1964 and Title VII of the Act and the Americans with Disabilities Act of 1990.

23. **Compliance With Laws:** In performing the Contract vendor shall comply with all applicable laws, ordinances and codes of the federal, state and local governments.

24. **Governing Law:** The Contract is governed by the laws of the State of New Mexico and the City of Albuquerque. The venue for actions arising out of the Contract is Bernalillo County, New Mexico.

25. **Federal Funding:** Procurements involving the expenditure of federal funds may be subject to mandatory applicable federal law and regulations.

Version Date: August 2019

City of Albuquerque
Procurement Contract

INTERA INC
9600 GREAT HILL TRAIL STE 300W
AUSTIN TX 78759

Jessica Joseph
512.246.1600 x1209
jjoseph@intera.com
psaller@intera.com

Supplier ID: 0000138272

Contract ID	SHR000022790
Contract Dates	02/01/2023 - 01/31/2027
Contract Reference	RFB-2022-332-DSW-CG
Contract Maximum	$0.00
Contract Print Date	01/19/2023
Origin	SWD

Description: GHG and LFG Operations

ITEM #	ITEM DESCRIPTION	Category	QTY	UOM	UNIT PRICE
1	GHG Emissions NMED Methane Monitoring Project Manager $117.50 hourly Engineer $222.00 hourly Technician $126.00 hourly	98846	-	EA	0.00
2	GHG Emissions GHG Monitoring and Reporting Engineer $222.00 hourly	98846	-	EA	0.00
3	GCCS Monthly Monitoring Project Manager $117.50 hourly Engineer $222.00 hourly Technician $126.00 hourly	98846	-	EA	0.00
4	GCCS Quarterly Monitoring Project Manager $117.50 hourly Engineer $220.00 hourly Technician $126.00 hourly	98846	-	EA	0.00
5	GCCS Operations Monthly Balancing Project Manager $117.50 Engineer $222.00 Technician $126.00	98846	-	EA	0.00
6	GCCS Monthly Maintenance Project Manager $222.00 Technician $126.00	98846	-	EA	0.00
7	GCCS Quarterly Maintenance Project Manager $222.00 Technician $126.00	98846	-	EA	0.00
8	GCCS Monthly Reporting Project Manager $222.00	98846	-	EA	0.00
9	GCCS Quarterly Reporting Project Manager $222.00	98846	-	EA	0.00
10	GCCS Air Quality Semi-Annual Reporting Project Manager $222.00	98846	-	EA	0.00
11	GCCS Air Quality Annual Reporting Project Manager $222.00	98846	-	EA	0.00
12	GCCS Flare Performance Test in accordance with Authority to Construct and Title V Permit Project Manager $222.00 Engineer $222.00 Technician $126.00	98846	-	EA	0.00

Purchasing Office Signature:

Lee Bradley

City of Albuquerque
Procurement Contract

INTERA INC
9600 GREAT HILL TRAIL STE 300W
AUSTIN TX 78759

James Joseph
505.246.1600 x1269
jjoseph@intera.com
psalter@intera.com

Contract ID	8HR000022700
Contract Dates	02/01/2023 - 01/31/2027
Contract Reference	RFB-2022-322-DSW-CC
Contract Maximum	$0.00
Contract Print Date	01/11/2023
Origin	SWD
Page 2 of 15	

Supplier ID: 0000136272

13	GCCS Typical Repairs- Relocation of Temperature Probe on Flare Stack Project Manager $117.50 Engineer $222.00 Technician $126.00	98846	-	EA	0.00
14	GCCS Typical Repairs- Remove, Calibrate, Re-Install FCI ST-98-21CTO Flow Meter (or equivalent) (once per 18 months) Project Manager $117.50 Engineer $222.00 Technician $126.00	98846	-	EA	0.00
15	GCCS Typical Repairs- Remove and Send for Re-building (1) 40 HP Houston Service Industries 08103 Blower (or equivalent), Re-Install with New Belts Project Manager $222.00 Technician $126.00	98846	-	EA	0.00
16	GCCS Typical Repairs- Remove Old and Install New UV Flame Detector C7035A1031 (or equivalent) and/or Sensor Project Manager $125.00 Engineer $222.00 Technician $126.00	98846	-	EA	0.00
17	GCCS Typical Repairs- Remove, send for Rewinding, Re-Install (1) WEG Blower Motor Model 0436EP3E324TS 40HD (or equivalent) Project Manager $222.00 Engineer $222.00 Technician $126.00	98846	-	EA	0.00
18	GCCS Typical Repairs- Well Extension Project Manager $117.50 Engineer $222.00 Technician $126.00	98846	-	EA	0.00
19	GCCS *Emergency Response and Reporting - Regular Business Hours Project Manager $150.00 Engineer $236.01 Technician $133.97	98846	-	EA	0.00
20	GCCS *Emergency Response and Reporting - After Hours Project Manager $150.00 Engineer $236.01 Technician $133.97	98846	-	EA	0.00

Purchasing Office Signature:

City of Albuquerque
Procurement Contract

INTERA INC
9900 GREAT HILL TRAIL STE 300W
AUSTIN TX 78759

James Joseph
512.246.1600 x1209
jjoseph@intera.com
paulter@intera.com

Contract ID	8HR000022790
Contract Dates	02/01/2023 - 01/31/2027
Contract Reference	RFB-2022-322-DSW-CG
Contract Maximum	$0.00
Contract Print Date	01/19/2023
Origin	SWD
Page 3 of 15	

Supplier ID: 0000136272

21	GCCS *Miscellaneous Tasks, Reporting and Meetings and/or Required Regulatory Follow Up Project Manager $150.00 Engineer $239.21 Technician $135.77	99846	-	EA	0.00
22	LFG Transmission Pipeline Routine Operation and Maintenance Project Manager $117.50 Engineer $222.00 Technician $126.00	99846	-	EA	0.00
23	LFG Transmission Pipeline Pipeline Patrolling/Leak Detection Surveys biannual patrolling annual leak detection Project Manager $222.00 Technician $126.00	99846	-	EA	0.00
24	LFG Transmission Pipeline Annual Reporting to the United States (US) Department of Transportation (DOT) Annual DOT/PSB Reporting Project Manager $222.00 Engineer $222.00	99846	-	EA	0.00
25	LFG Transmission Pipeline Annual Operations Review, Plan Updates, Training Pipeline Plan Review and Updates Project Manager $117.50 Engineer $222.00 Technician $126.00	99846	-	EA	0.00
26	LFG Transmission Pipeline Operator Training, Evaluation, Qualification Project Manager $117.50 Engineer $222.00 Technician $126.00	99846	-	EA	0.00
27	LFG Transmission Pipeline Pipeline Cleaning/Pigging in accordance with manual includes shut down, purging, pigging and start up Project Manager $117.50 Engineer $222.00 Technician $126.00	99846	-	EA	0.00
28	LFG Transmission Pipeline Abnormal Condition Response as defined by NMPRC Project Manager $124.92 Engineer $235.01 Technician $133.95	99846	-	EA	0.00

Purchasing Office Signature:

City of Albuquerque
Procurement Contract

INTERA INC
9600 GREAT HILL TRAIL STE 300W
AUSTIN TX 78759

James Joseph
505.246.1600 x1209
jjoseph@intera.com
psalter@intera.com

Contract ID	**SHR000022780**
Contract Dates	**02/01/2023 - 01/31/2027**
Contract Reference	**RFB-2022-322-DSW-CG**
Contract [illegible]	**$0.00**
Contract Print Date	**01/19/2023**
Origin	**SWD**
Page 4 of 15	

Supplier ID: 0000136272

29	LFG Transmission Pipeline *Emergency Response and Reporting - Regular and After Business Hours Project Manager $124.92 Engineer $236.01 Technician $133.95	98846	-	EA	0.00
30	LFG Transmission Pipeline *Miscellaneous Tasks, Reporting and Meetings and/or Required Regulatory Follow Up Project Manager $126.61 Engineer $239.21 Technician $135.77	98846	-	EA	0.00
31	Non Labor Expenses for all tasks	98846	-	EA	0.00

Title: Greenhouse Gas (GHG) and Landfill Gas (LFG) Operations, Maintenance and Monitoring at the Albuquerque Cerro Colorado Landfill (CCFL)

Term: 02/01/2023 - 01/31/2027

The City of Albuquerque shall enter into a contract for Greenhouse Gas (GHG) Emissions Monitoring and Reporting; Landfill Gas (LFG) Collection and Control System (GCCS) Operations, Maintenance, Monitoring, Reporting, Performance Tests, Repair and Emergency Response; LFG Transmission Pipeline Operations, Maintenance, Monitoring, Testing, Reporting, Plan Review, Updates, Training, Pigging, Repair and Emergency Response; Leachate Management Monitoring, Maintenance and Reporting, and Ground Water Sampling at the City of Albuquerque Cerro Colorado Landfill (CCFL); - in accordance with the terms, conditions, and specifications set forth herein.

Non-Labor Expenses shall be allowed and applied for each group of tasks at cost.

Anytime parts or materials must be purchased or equipment rented, repaired or replaced, or subcontractors must be hired, contractor will bill City at cost.

This contract is subject to the Code of Federal Regulations. To view the Code of Federal Regulations, go to: www.ecfr.gov

Intera Inc. shall provide services required for:
- Greenhouse Gas (GHG) Emissions - Monitoring and Reporting.
- Landfill Gas (LFG) Collection and Control System (GCCS) - Operation, maintenance, monitoring, reporting, performance testing, repair and emergency response for the LFG GCCS to include the landfill open flare and all attached equipment.
- Landfill Gas (LFG) Transmission Pipeline - Operation, maintenance, monitoring, testing, reporting, plan review, updates, training, pigging, repair and emergency response for the LFG Transmission Pipeline.

Purchasing Office Signature:

City of Albuquerque
Procurement Contract

INTERA INC
9600 GREAT HILL TRAIL STE 300W
AUSTIN TX 78759

James Joseph
505.246.1600 x1209
jjoseph@intera.com
pcollier@intera.com

Supplier ID: 0000136272

Contract ID	SHR0000022795
Contract Dates	02/01/2023 - 01/31/2027
Contract Reference	RFP-2022-322-DSW-CS
Contract Maximum	$0.00
Contract Print Date	01/19/2023
Origin	SWD
Page 5 of 15	

Intera Inc shall perform all required monitoring and reporting necessary to prevent any non-compliance with applicable federal, state, and local regulations or pose a health or safety threat to the public or staff. Applicable federal regulations shall specifically include the requirements specified under 40 CFR Parts 60, 62 and 98 and 49 CFR 191 and 192.

GREENHOUSE GAS (GHG) EMISSIONS MONITORING AND REPORTING
The CCLF is subject to the provisions in 40 CFR 98 Subpart HH - "Mandatory Reporting of GHG for Municipal Solid Waste Landfills". The CCLF currently operates under a GHG Monitoring Plan written and submitted March 31, 2010, to demonstrate compliance with 40 CFR 98.3(g) (5). In addition to the landfill emissions, the plan identifies several stationary sources at the CCLF that require reporting under 40 CFR 98, including, but not necessarily limited to, the flare station pilot, propane heaters at the landfill office trailers and the heavy equipment shop. Annual fuel usage at these identified sources is recorded and maintained for use in calculating annual GHG Emissions for each combustion source. Per 40 CFR 98.30, none of these sources fall under the current combustion source reporting requirements (flares are categorically exempted and portable sources are not required to report).

Intera Inc shall be responsible for:
Quarterly methane monitoring using borehole probes in accordance with the Cerro Colorado Landfill's New Mexico Environment Department (NMED) approved Landfill Gas Monitoring Plan (Permit # SWM-010221, SWM-010221(SP), Volume II B, Section 6). In general, monitoring involves measuring methane levels from twelve (12) points along active cell perimeters and within six (6) structures located on landfill property using an appropriate portable gas analyzer.

All monitoring and reporting as outlined in the facility GHG Monitoring Plan and in accordance with any updates in protocols or procedures pursuant to 40 CFR 98 Subpart HH. Calculations of modeled methane generation will include:

Modeled methane generation (98.343(a)). Quantities of methane recovered for destruction (98.343(b)). Calculated methane emissions including flare destruction (98.343(c). Calculated carbon dioxide, methane, and nitrous oxide emissions for general stationary fuel combustion sources (98.33(a) (1). (c) (1). Quality assurance of GEM 2000 (or equivalent) in accordance with 98.344(b) (5) (ii)-Annual Calibration for NMOC. Quality assurance of the Open Flare via one of the methods listed 40 CFR 98.344(b)

The issuance and quality assurance of all reports issued directly to EPA under the provisions of 40 CFR 98 Subpart HH. All reporting, both emissions and quality assurance, shall comply with the specific requirements of the EPA Region governing GHG Monitoring, and shall comply with the written GHG site specific Monitoring Plan. Two (2) hard copies and electronic versions of all reports shall be provided to the CCLF upon issuance to EPA. The annual GHG data is required to be submitted directly into the EPA eGRT (electronic Greenhouse Gas Reporting Tool). Coordination with the SWMD eGRT signatory authority is required to electronically sign and submit the report.

Purchasing Office Signature:

City of Albuquerque
Procurement Contract

INTERA INC
9600 GREAT HILL TRAIL STE 300W
AUSTIN TX 78759

James Joseph
505.246.1600 x1209
jjoseph@intera.com
pseiler@intera.com

Supplier ID: 0000136272

Contract ID	SHR0000022790
Contract Dates	02/01/2023 - 01/31/2027
Contract Reference	RFB-2022-322-DSW-CG
Contract Maximum	$0.00
Contract Print Date	01/19/2023
Origin	SWD

LFG COLLECTION AND CONTROL SYSTEM (GCCS)

Detailed Description

At this time, the GCCS at the CCFL consists of 58 vertical extraction wells 5 horizontal collectors and 6 leachate risers.
The landfill flare station currently in use is an LFG Specialties model PCF103018, equipped with a knock off pot, actuator valve, two (2) 40 hp. blowers with adjusting butterfly valves, flow meter, Varec flame arrestor, pilot gas system, flare stack, and a Flame Trol III control center.

Expansion of the system may be necessary dependent upon emissions and applicable Air Quality regulations. A contingency has been developed and involves three (3) horizontal collectors, each approximately 1,000 feet long.

GCCS Monitoring

The Intera Inc. shall provide the required instrumentation (Gastech or Landtec GEM 5000 or equivalent) for ongoing gas analysis and data collection of the LFG system at the CCLF.

GCCS Monthly Monitoring:

As per 40 CFR Part 60 once each month the LFG collection wells shall be monitored for methane, oxygen, carbon dioxide, temperature and flow rate and shall be balanced. Appropriate adjustments shall be made and wells requiring correction shall be re-monitored as necessary to facilitate system compliance and assure adequate overall performance of the system, as outlined under 40 CFR Part 60. Visual determination of fugitive emissions from the flare shall be monitored monthly using EPA's Method 22. At the same time, record equipment hours and usage for emission units listed in Section 2, Tables 4 and 5 of Title V Permit # 0537-M1-RN1 as applicable.

GCCS Quarterly Monitoring:

(Once every three [3] months): Surface and cover penetration monitoring of the applicable portions of the CCFL shall be accomplished using either a flame ionization detector or a photo ionization detector as specified under 40 CFR 60. Areas of elevated readings shall be recorded and appropriate reporting and remediation implemented in shall order to assure ongoing compliance with any federal, state, or local regulations or established conditions. The surface emissions monitoring shall be conducted along a design pattern that traverses the landfill surface along 30 meter intervals, but only in those areas with waste in place that is more than (5) years in age.

GCCS Operation

Monthly: At least once every 30 days adjustments must be made to the flow rate at each of the LFG extraction wells based on the information obtained during monitoring of the individual wells and at the flare station itself. Adjustments shall ensure that LFG will be collected at a rate that maintains a negative gauge pressure vacuum at all wellheads without an increase in oxygen, per 40 CFR 60.751. As specified in the federal regulations, the parameters of concern are LFG composition, LFG pressure and/or vacuum, wellhead temperature, and flow velocity. Adjustments to the vacuum and subsequent flow rate at the flare station are also required in order to maintain correct balance with the extraction system.

The primary purpose of the extraction

Purchasing Office Signature:

INTERA INC
9600 GREAT HILL TRAIL STE 300W
AUSTIN TX 78759

James Joseph
505.246.1600 x1200
jjoseph@intera.com
pmiller@intera.com

Contract ID	SHR0000022780
Contract Dates	02/01/2023 - 01/31/2027
Contract Reference	RFB-2022-322-DSW-CC
Contract Maximum	$0.00
Contract Print Date	01/19/2023
Origin	SWD
Page 7 of 15	

Supplier ID: 0000135272

monitoring and balancing is to minimize landfill surface, cover penetration emissions, and control the possible off-site migration of LFG in order to maintain regulatory compliance. All additional adjustments required to meet the requirements outlined in the applicable CFR's must be completed in a timely fashion and must demonstrate compliance with the applicable regulations. The awarded offeror must have experience with the new provisions and the 5/15 day rules as established under the revised and updated CFR.
GCCS Maintenance

Monthly: Intera Inc. shall conduct visible inspection of all system components, to include wellheads, exposed lines, valves and port connections, and the flare system itself. Any problems noted should be immediately reported to the appropriate landfill staff, along with recommendations for repair and/or any problems noted should be immediately reported to the appropriate landfill staff, along with recommendations for repair and/or repair and replacement as needed. The contractor shall insure the proper operation of the Flame Trol II Control Center and all other flare components. Contractor shall change the flare chart recorder paper a minimum of four (4) times per month and lubricate the bearings on each of the blowers twice per week, or eight (8) times per month using only the manufacturers recommended lubricant. NOTE: The Landfill POC information will be provided at the time of award.

Quarterly: The Intera Inc. shall be responsible for the following:
Monitoring the pressure drop across the mist extraction pad at maximum LFG flow, and clean the pad when the pressure drop has increased to twice the normal pressure drop for the clean pad condition.

Insure proper operation of the pneumatic valve actuator. Lubricate actuator and valve mechanism per manufacturer's recommendations.

Start the non-operating blower monthly to prevent motor or bearing freeze up.

Inspect the operational blower, listening for unusual noises and feeling for abnormal vibrations or excessive heat.

Ensure bearings on each of the blowers are lubricated as mentioned above, using only the manufacturers recommended lubricant.

Check the pressure drop across the flame arrester. If the pressure drop exceeds two (2) inches of water column at maximum LFG flow, then the flame arrester must be cleaned according to manufacturer's recommendations.

Insure the proper operation of the propane fuel pilot ignition system, including removal and replacement of empty propane tanks, as needed.

Inspect the condition of the UV Flame detector and replace the detector if damaged or not properly functioning.

Adjust the burner tip orifice to stabilize flare operation, as required. Confirm the calibration of the thermal flow

Purchasing Office Signature:

INTERA INC
9600 GREAT HILL TRAIL STE 300W
AUSTIN TX 78759

James Joseph
[illegible].1600 x1209
jjoseph@intera.com
pcalfer@intera.com

Supplier ID: 0000136272

Contract ID	SHR0000022700
Contract Dates	02/01/2023 - 01/31/2027
Contract Reference	RFB-2022-322-DSW-CO
Contract Maximum	$0.00
Contract Print Date	01/19/2023
Originator	SWD
Page 8 of 16	

sensor, using an independent Pitot tube. Inspect the control panel and test indicator lights for proper operation, and replace bulbs as required.

GCCS Reporting
All reporting shall conform to the requirements established under 40 CFR Part 63.
Monthly Reporting: The Intera Inc. shall prepare a detailed report for the City of Albuquerque Solid Waste Management Department (SWMD) containing the emissions data collected during the previous month, and a summary of the activity performed during the previous month. Two (2) hard copies of the report and an electronic version shall be provided to the SWMD, and the information maintained on a contractor database in order to appropriately track any long term trends in the LFG collection system that would justify future operation modifications or additions. An ongoing log should be maintained of each inspection and site visit, with details of any deficiencies discovered and actions taken to remedy the problems.

Quarterly Reporting: The Intera Inc. shall prepare a detailed report for the SWMD containing the data collected during the required surface and cover penetration monitoring, to include instrument calibration and a monitoring log, along with appropriate weather data and other information, as required. The report shall include all maintenance done during the previous quarters, including checks of all the system components. Two (2) hard copies of each of these reports and an electronic version shall be provided to the SWMD, and the information maintained on a contractor held database in order to appropriately track any long term trends in the surface monitoring and/or repairs and maintenance.

Air Quality Semi-Annual Reporting: Prepare and submit emission unit reports and the Certified Compliance Progress Report semi-annually in accordance with Albuquerque/Bernalillo County Air Quality Control Board Title V Operating Permit #0537-M1-RN1 .

Air Quality Annual Reporting: Prepare and submit the Annual Compliance Certification and Emissions Inventory Report in accordance with Albuquerque/Bernalillo County Air Quality Control Board Title V Operating Permit #0537-M1-RN1 and the EPA Air Quality Regulations.

Performance Tests
Flare Performance Test: Within 365 days of the previous flare performance test, Bidder shall, on an annual basis, conduct a flare performance test in accordance with the Authority to Construct and Title V Permit Operating Permit #0537-M1-RN1 . Task includes submission of the protocol, required notification as prescribed, and report preparation and timely submission to the governing authority/ies. Two (2) hard copies of this report and an electronic version shall be provided to the SWMD, and the information maintained on a contractor held database in order to appropriately track any long term trends in the flare performance.

GCCS Typical Repairs
- Relocation of Temperature Probe on Flare Stack
- Remove, calibrate, and re-install (once per 18 months) an FCI ST-98-21 CTO flow meter (or equivalent)
- Remove and send for re-building one (1) 40 HP Houston

Purchasing Office Signature:

Lee Bradley

INTERA INC
9600 GREAT HILL TRAIL STE 300W
AUSTIN TX 78759

James Joseph
805.248.1600 x1209
jjoseph@intera.com
psafier@intera.com

Supplier ID: 0000136272

Contract ID	SHR00022700
Contract Dates	02/01/2023 - 01/31/2027
Contract Reference	RFB-2022-322-DSW-CG
Contract Maximum	$0.00
Contract Print Date	01/18/2023
Origin	SWD
Page 9 of 15	

- Service Industries 06105 Blower (or equivalent), re-install with new belts
- Remove old and install new UV Flame Detector C7035A1031 (or equivalent) and/or sensor
- Remove, send for re-winding, re-install one (1) WEG blower motor Model 436EP3E324TS 40HP (or equivalent)
- GSSC well extension, assume electrofusion welding

Emergency Response, Reporting and Corrective Action
The Intera Inc. shall be able to respond within a 24-hour time frame to address any issues and/or repairs to the GCCS and flare and associated reporting requirements. This includes trouble shooting or corrective action required on any part of the systems to be maintained as listed under Part b- 3, Section B. A contact list shall be provided at the time of the award, with appropriate phone numbers in order for landfill staff to call for assistance, as needed.

Miscellaneous Tasks, Reporting, And Meetings

Gas Control and Collection Systems are highly regulated and typically develop needs that have not been anticipated during the planning and construction process. To address unanticipated needs, this task was developed to ensure a mechanism is in place for Bidder to assist with, but not be limited to, miscellaneous meetings, the development of reports or additional plans, responses to expansions or changes in regulatory conditions.

The bidder shall submit an hourly billing rate for any technicians or engineer's time that the contractor feels might be necessary to facilitate trouble shooting, corrective action to include required repairs, and associated reporting for any portion of the GCCS.

LFG TRANSMISSION PIPELINE

The LFG Transmission Pipeline is approximately two (2) miles long and is used to convey treated LFG treated from the CCLF to the Metropolitan Detention Center (MDC) where it is used as a fuel source to fire boilers providing hot water and comfort heat.

Routine Operation and Maintenance (O&M):
Routine O&M includes primarily the infrastructure at the compression skid. It includes weekly site visits to confirm proper operation and check for "abnormal conditions". Routine O&M is assumed to include the following activities.
- Weekly site visits to the compression skid to review and record systems parameters, bi-weekly visits to grease components
- Cleaning/changing the filters on the condensate knock out vessels
- Adding and/or changing the glycol coolant
- Lean y-strainers
- Change oil (every three months)
- Check belt tension and replace belts as needed.
- Maintain standing water in dip trap
- Calibrate flow meters

Purchasing Office Signature:

INTERA INC
9600 GREAT HILL TRAIL STE 300W
AUSTIN TX 78759

James Joseph
505.246.1600 x1209
jjoseph@intera.com
psalter@intera.com

Supplier ID: 0000136272

Contract ID	SHR00[illegible]2750
Contract Dates	02/01/2023 - 01/31/2027
Contract Reference	RFB-2022-329-DSW-CG
Contract Maximum	$0.00
Contract Print Date	01/[illegible]/2023
Origin	SWMD
Page 10 of 15	

- Clean air filters
- Download electronic chart recorder data and transmit it to the SWMD.
- Measure and document LFG quality with LFG analyzer
- Confirm proper interlocks with LFG flare skid
- Confirm proper functioning of alarm interlock
- Inspect steel piping (every three years) and complete report form
- Check cathodic protection system (annually) and complete report form
- Evaluate odorization of LFG and complete report form
- Pressure relief valve inspection and testing (annually) and complete report form
- Valve inspections and testing (annually) and complete report form
- Driving inspection of the pipeline route to check surface conditions, check for exposed sections of buried pipe, and confirm that pipe markers are in place and in good condition (every two weeks)
- Provide manufacturer support of the compression skid, as needed

The deliverable to the SWMD for this task shall be completion of the above specified items and conveyance of recorded/downloaded data and report forms on a monthly basis.

Pipeline Patrolling and Leak Detection Surveys

Pipeline patrolling and leak detection surveys will be performed as specified in sections 2.5 (49 CFR 192.614) and 3.2 of the O&M manual. The manual calls for biannual pipeline patrolling and annual leak detection surveys. The Bidder will walk the pipeline route during these events and complete the report form(s). Inspections will include listening for leaks, looking for subsidence, stressed vegetation, rilling/erosion, exposed pipeline, evidence of heavy traffic in areas other than identified in the O&M manual, and the detection of LFG (during the leak detection survey). The leak detection survey will be conducted with a flame ionization detector (FID) designed to meet the sensitivity requirements of the regulations. The FID will be calibrated in the field before each use. More frequent driving inspections of the pipeline are to be performed under the Routine O&M task above.

Annual Reporting to the United States (US) Department of Transportation (DOT)

An annual report must be submitted to the US DOT on or before March 15th each year. The report must be prepared using the DOT's form no. PHMSA 7100.2-1. On behalf of the SWMD, Bidder will complete the report form and transmit it electronically to the SWMD for review, and for submission, must coordinate with SWMD Point of Contact (POC) for the City's Executive electronic signature.

Annual Operations Review, Plan Updates, And Training

This task includes the review of the O&M, Emergency Response, Integrity Management, Public Awareness and Operator Qualification Plans and amendments as needed to address changing conditions, changes in regulation and/or necessary improvements. Bidder will provide annual training to qualify, requalify and evaluate operators in accordance with the Operator Qualification Plan. Most of the re-qualifications are on two-year cycles, however, an annual budget should be planned to allow for regular evaluations of qualified

Purchasing Office Signature:

INTERA INC
9600 GREAT HILL TRAIL STE 300W
AUSTIN TX 78759

James Joseph
605.246.1600 x1209
jjoseph@intera.com
psalter@intera.com

Supplier ID: 0000136272

Contract ID	SHR000022760
Contract Dates	02/01/2023 - 01/31/2027
Contract Reference	RFB-2022-322-DSW-CG
Contract Maximum	$0.00
Contract Print Date	01/19/2023
Origin	SWS
Page 11 of 15	

operators and training of new staff (as required). Bidder shall include costs associated with the development and implemantation of the drug testing for select Bidder employees as required by US DOT. Bidder shall also provide Public Awareness notices as required by the Public Awareness Plan.

Pipeline Cleaning

The 12-inch-high density polyethylene (HDPE) LFG transmission pipeline is constructed with pigging stations for the periodic cleaning of the pipeline. This task is designated "as needed". It is anticipated that the pipeline will not require cleaning more than twice during the term of this contract. Cleaning of the pipeline will be in accordance with the O&M manual and will include:

- Shutdown of the compression skid and pipeline (section 2.2.5 of the O&M manual).
- Purging of the pipeline in accordance with Appendix D of the O&M manual.
- Pigging of the line with a polyurethane pig.
- Start up and system monitoring to ensure proper operation.

Abnormal Condition Response

The pipeline and compression skid are designed to operate within normal specified ranges. When the system operates outside of these ranges, an "abnormal condition" is identified. The O&M manual identifies a list of abnormal conditions including:

- Low suction pressure at the LFG conditioning skid
- Low discharge pressure at the LFG conditioning skid.
- High discharge pressure at the LFG conditioning skid.
- Low inlet pressure at the MDC.
- High oxygen content.
- High LFG condition skid knockout pot level.
- Fire alarm at MDC.
- Methane alarm at MDC.

Identification of these conditions or notification by the MDC or SWMD of existing conditions at the MDC end of the pipeline will trigger a response as prescribed in the O&M manual. Bidder will identify and correct the condition within the scope of the contract. Once the condition has been corrected, the system will be checked daily for 5 days in accordance with 40 CFR 192.605. Intera Inc. will complete report forms and evaluation of operation as needed to develop a budget for this task, Bidder will assume one abnormal condition event each year.

Emergency Response and Reporting

This task pertains to conditions that are more extreme than or not included in the Abnormal Conditions identified above. An emergency response would be triggered by the detection of a leak, damage to the pipeline, or damage to any other portion of the infrastructure that could result in the need of an immediate

Purchasing Office Signature:

INTERA INC
9600 GREAT HILL TRAIL STE 300W
AUSTIN TX 78759

James Joseph
505.246.1600 x1209
jjoseph@intera.com
pcalter@intera.com

Supplier ID: 0000126272

Contract ID	SHR0000022700
Contract Dates	02/01/2023 - 01/31/2027
Contract Reference	RFB-2022-322-DSW-CG
Contract Maximum	$0.00
Contract Print Date	01/[illegible]/2023
Origin	SWD
Page 12 of 16	

reaction to protect the safety of the public or SWMD personnel and contractors. The task also includes the completion of a US DOT Incident report form for the SWMD to submit electronically to the US DOT.

Miscellaneous Tasks, Reporting, And Meetings

Gas transmission lines are highly regulated and typically develop needs that have not been anticipated during the planning and construction process. To address unanticipated needs, this task was developed to ensure a mechanism is in place for Bidder to assist with, but not be limited to, miscellaneous meetings, the development of reports or additional plans, responses to expansions or changes in regulatory conditions, and issues regarding delivery to the MDC.

INTERA INC. MAY BE TASKED WITH ADDITIONAL RESPONSIBILITIES ON A TIME AND MATERIAL BASIS:

Leachate Management
In accordance with the Cerro Colorado Landfill's New Mexico Environment Department (NMED) approved Leachate Management Plan (Permit # SWM-010221, SWM-010221(SP), Volume II B, Section 7), inspect leachate pond, manholes and pumps monthly. Monitor leachate production, measure and record volume and flow rates quarterly. Collect leachate samples annually. Prepare quarterly reports for submission to NMED that summarize flow rates and the volume of leachate pumped, disposal methods and disposal locations. Prepare also for submission to NMED an annual report of the sampling event that includes, but is not limited to, a summary of the event, a description of the methods used for leachate sampling, figures, tables, results, a narrative discussion, and a conclusion.

Check landfill weather station and rain collector for water and/or dust accumulation and clean as needed. Monitor software and data output, download data regularly and maintain files.

Groundwater Sampling
On an annual basis and in accordance with the CDM Smith's 2010 City of Albuquerque Cerro Colorado Groundwater Monitoring and System Plan, four monitor wells will be sampled and depth to ground water measured in each. Ensure laboratory data is sent to engineers on contract timely for NMED Solid Waste Bureau (SWB) annual reporting.

New Mexico Environment Department (NMED) Solid Waste Annual Reports
Perform quarterly inspections of all four solid waste facilities.
When Eagle Rock Convenience Center sump tank is full (two to four times/year), collect and submit wash water samples for total dissolved solids (TDS), chloride, volatile organic compounds (VOC) using EPA method 8260, semi-volatile organics using EPA method 8270C, and metals using EPA method 7000A or 6010B analyses by on call environmental laboratory. Compare the analytical results to the New Mexico Administrative Code (NMAC) 20.6.2.3103 groundwater standards and identify any analytes on the NMAC 20.6.2.7.T.2 toxic pollutants list that exceed groundwater standards and/or the toxic pollutants list. Determine if water is usable at CCLF for dust control and submit as part of the annual reports to NMED.

Purchasing Office Signature:

INTERA INC
9600 GREAT HILL TRAIL STE 300W
AUSTIN TX 78759

James Joseph
505.246.1600 x1209
jjoseph@intera.com
pcallen@intera.com

Supplier ID: 0000136272

Contract ID	SHR0300227SO
Contract Dates	02/01/2022 - 01/31/2027
Contract Reference	RFB-2022-322-DSW-CG
Contract Maximum	$5.00
Contract Print Date	01/19/2023
Origin	SHD
Page 13 of 15	

Preparation and timely submission of Solid Waste and Scrap Tire Hauler Annual reports.
Assist with records compilation and provide support during any NMED SWB solid waste facility inspection.

Stormwater
Monthly inspections, reporting and revisions in accordance with the Multi-Sector General Permit (MSGP) and the Stormwater Pollution and Prevention Plans (SWPPP).

Field and/or Administrative Work
Data collection or compilation required to meet any regulatory commitment.

Department Contacts:
Stephanie Phillips 505-7618152 sphillips@cabq.gov
Daniele Berardelli 505-761-8326 dberardelli@cabq.gov

Alternate Intera Inc. Contact:
Joe Tracy jtracy@intera.com

Purchasing Office Signature:

Lee Bradley

City of Albuquerque
Procurement Contract

INTERA INC
9600 GREAT HILL TRAIL STE 300W
AUSTIN TX 78759

James Joseph
505.246.1600 x1209
jjoseph@intera.com
psalter@intera.com

Supplier ID: 0000136272

Contract ID	SHR000022790
Contract Dates	02/01/2023 - 01/31/2027
Contract Reference	RFB-2022-322-DSW-CG
Contract Maximum	$0.00
Contract Print Date	01/19/2023
Origin	SWD
Page 14 of 15	

Instructions to Supplier:

- Do not fill orders for goods/services not listed in this Procurement Contract.
- Orders against this Procurement Contract must be placed with a Purchase Order Release (POR).
- Do not fill orders without a POR.
- POR number must be on all invoices.

Please forward all original invoice(s) to:
City of Albuquerque
Accounting Division
PO Box 1995
Albuquerque, NM 87103

For information on invoicing and payments, please visit: https://www.cabq.gov/dfa/accounting/how-do-i-get-paid

Instructions to End-User:
Do Not place orders for goods/services not listed on this Procurement Contract.
To place an order against this Procurement Contract, issue a POR prior to placing the order with the Supplier.

Purchasing Office Signature:

CITY OF ALBUQUERQUE TERMS AND CONDITIONS

Direct all inquiries to: City of Albuquerque, Purchasing Division, P.O. Box 1293, Albuquerque, NM 87103 or call (505) 768-3320.

1. **Contract:** By commencing work, vendor accepts all Terms and Conditions herein and agrees that, to the extent vendor terms conflict, these Terms and Conditions shall govern. These Terms and Conditions and any non-conflicting vendor terms and conditions shall constitute the Contract.

2. **Invoicing:** Department name AND purchase order number MUST be on all invoices, packing slips, shipping notices, freight bills, and correspondence concerning the order. Send invoices original and duplicate to: Accounting, P.O. Box 1293, Albuquerque, NM 87103.

3. **Payment:** City's payment terms are net 30 days unless otherwise stated. City shall not pay late fees, finance fees, or collection fees. Any vendor that accepts payments by credit card on behalf of City must be Payment Card Industry Data Security Standard compliant.

4. **FOB Destination and Inspection:** The risk of loss, injury and destruction, and legal title to the goods remains with vendor until the goods reach the location of the City. All goods delivered are subject to inspection upon receipt by City. Department's count will be accepted by vendor as final and conclusive on all shipments not accompanied by a packing slip. All rejected goods shall remain the property of vendor and will be returned at vendor's expense.

5. **Taxes:** Vendor is responsible for determining whether taxes are applicable to the order and for payment of the tax. Applicable taxes are to be included in each invoice due and may not be billed more than sixty (60) days after providing the goods or services to which the taxes apply.

6. **Warranty:** Vendor warrants that the goods and services furnished shall (a) conform to the specifications; (b) be free from defects in materials and workmanship; (c) be suitable for the purpose intended; (d) be new and of most current production; (e) be free from security interests or liens; and (f) not infringe upon or violate any copyrights or patent rights.

7. **Insurance:** Vendor agrees to comply with its state's law pertaining to workers' compensation benefits for its employees. If vendor fails to comply with the applicable workers compensation law when required to do so, the Contract may be terminated by City. Vendor also agrees to procure and maintain the insurance in https://www.cabq.gov/dfa/purchasing/vendor-packet/general-instructions-terms-and-conditions (Section 28) and any additional insurance coverage requested by City.

8. **Default:** City reserves the right to cancel all or any part of the Contract without cost to the City if vendor fails to meet the provisions of the Contract and, except as otherwise provided herein, to hold Vendor liable for any excess cost incurred by City due to vendor default.

9. **Force Majeure:** Neither Vendor nor City shall be liable for failure to perform its obligations under the Contract due to causes beyond the control and without the fault or negligence of either party. Such causes include, but are not restricted to, acts of God or the public enemy, acts of the State or federal government, fires, floods, epidemics, quarantine restrictions, strikes, freight embargoes, unusually severe weather and defaults of subcontractors due to any of the above, unless City shall determine that the supplies or services to be furnished by the subcontractor were obtainable from other sources in sufficient time to permit vendor to meet the required delivery schedule. The rights and remedies of the City provided in this paragraph shall not be exclusive and are in addition to any other rights now being provided by law or under the Contract.

10. **Termination for Lack of Appropriations:** Notwithstanding any provision in the Contract to the contrary, payments hereunder are contingent upon the Albuquerque City Council making the necessary appropriations. If sufficient appropriations are not made, the Contract may be terminated at the end of City's then current fiscal year upon written notice given by City to vendor. Such event shall not constitute an event of default and all payment obligations of City and all of its interest in the Contract will cease upon the date of termination. City's determination regarding appropriation shall be accepted by vendor and shall be final.

11. **Termination for Convenience:** City may terminate the Contract at any time by giving at least 30 days' written notice to the Vendor. In such event, vendor shall be paid under the terms of the Contract for all goods and/or services provided to and accepted by City. If ordered or accepted by City prior to the effective date of termination.

12. **Contract Changes:** In no case shall the Contract be changed without the prior written approval of City's Chief Procurement Officer.

13. **Assignment:** Neither the Contract, nor any interest therein, nor claim thereunder, shall be assigned or transferred by vendor, except as expressly authorized in writing by City's Chief Procurement Officer or designee. No such assignment or transfer shall relieve vendor from the obligations and liabilities under the Contract.

14. **City Furnished Property:** City furnished property shall be returned to City upon request in the same condition as received except for ordinary wear, tear, and modifications ordered hereunder.

15. **Indemnity:** Vendor agrees to defend, indemnify and hold harmless City from any and all claims, actions, suits or proceedings brought against City because of any injury or damage received or sustained by any person or property arising out of or resulting from the Contract or by reason of any asserted act or omission, neglect or misconduct of vendor or its agents or employees or any subcontractor or its agents or employees. This indemnity shall not be limited by reason of the specification of any particular insurance coverage in the Contract. City shall not indemnify vendor.

16. **Debarment, Suspension, Ineligibility and Exclusion Compliance:** Vendor certifies (a) that it has not been debarred, suspended or otherwise found ineligible to receive funds by any agency of the executive branch of the federal government, the State of New Mexico, any local public body of the State, or any state of the United States; and (b) should any notice of debarment, suspension, ineligibility or exclusion be received by vendor, vendor will notify City immediately.

17. **Conflict of Interest:** No officer, agent or employee of City will participate in any decision relating to the Contract which affects that person's financial interest, the financial interest of his or her spouse or minor child or the financial interest of any business in which he or she has a direct or indirect financial interest.

18. **Interest of Contractor:** Vendor agrees that it presently does not have, and shall acquire no direct or indirect interest which conflicts in any manner or degree with the performance of the terms of the Contract. Vendor will not employ any person who has any such conflict of interest to assist Vendor in performing the services.

19. **No Collusion:** Vendor represents that it has entered into the Contract without collusion on the part of Vendor with any person or firm, without fraud and in good faith. Vendor also represents that no gratuities, in the form of entertainment, gifts or otherwise, were, or during the term of the Contract, will be offered or given by vendor or any agent or representative of vendor to any officer or employee of the City with a view towards securing the Contract or for securing more favorable treatment with respect to making any determinations with respect to performing the Contract.

20. **Audits and Inspections:** At any time during normal business hours and as often as City may deem necessary, there shall be made available to City for examination all of vendor's records with respect to all matters covered by the Contract. Vendor shall permit City to audit, examine, and make excerpts or transcripts from such records, and to make audits of all contracts, invoices, materials, payrolls, records of personnel, conditions of employment and other data relating to all matters covered by the Contract. Vendor understands and will comply with City's Accountability in Government Ordinance, §§ 2-10-1 et seq. and Inspector General Ordinance, §§ 2-17-1 et seq. R.O.A. 1994, and also agrees to provide requested information and records and appear as a witness in hearings for City's Board of Ethics and Campaign Practices pursuant to Article XII, Section 8 of the Albuquerque City Charter.

21. **Compliance With Ethics Provisions:** Vendor certifies that it has not, either directly or indirectly, entered into action in restraint of free competitive bidding and is in compliance with the Ethical Conduct provisions of City's Public Purchases Ordinance, § 5-5-22 R.O.A. 1994.

22. **Non-discrimination:** In performing the Contract, vendor shall comply with the Federal Civil Rights Act of 1964 and Title VII of the Act and the Americans with Disabilities Act of 1990.

23. **Compliance With Laws:** In performing the Contract vendor shall comply with all applicable laws, ordinances and codes of the federal, state and local governments.

24. **Governing Law:** The Contract is governed by the laws of the State of New Mexico and the City of Albuquerque. The venue for actions arising out of the Contract is Bernalillo County, New Mexico.

25. **Federal Funding:** Procurements involving the expenditure of federal funds may be subject to mandatory applicable federal law and regulations.

Version Date: August 2018

City of Santa Fe
Treasury Department
200 Lincoln Ave.
Santa Fe, New Mexico 87504-0909
505-955-6551

BUSINESS REGISTRATION

Business Name: INTERA INCORPORATED
DBA: INTERA INCORPORATED

Business Location: 1435 S SAINT FRANCIS DR 103
SANTA FE , NM 87505

Owner: Bonnie Meihem

License Number: 227829

Issued Date: August 24, 2023

Expiration Date: August 24, 2024

CRS Number: 02480923003

License Type: Business License - Renewable

Classification: Contractor - General

Fees Paid: $35.00

INTERA INCORPORATED
9600 GREAT HILLS TRL Suite 300W
AUSTIN, TX 78759

THIS IS NOT A CONSTRUCTION PERMIT OR SIGN PERMIT. APPROPRIATE PERMITS MUST BE OBTAINED FROM THE CITY OF SANTA FE BUILDING PERMIT DIVISION PRIOR TO COMMENCEMENT OF ANY CONSTRUCTION OR THE INSTALLATION OF ANY EXTERIOR SIGN.

THIS REGISTRATION/LICENSE IS NOT TRANSFERRABLE TO OTHER BUSINESSES OR PREMISES.

Ver. 15 2/1/2020

Client#: 914933 INTERINC22

ACORD™ CERTIFICATE OF LIABILITY INSURANCE

DATE (MM/DD/YYYY) 6/03/2024

THIS CERTIFICATE IS ISSUED AS A MATTER OF INFORMATION ONLY AND CONFERS NO RIGHTS UPON THE CERTIFICATE HOLDER. THIS CERTIFICATE DOES NOT AFFIRMATIVELY OR NEGATIVELY AMEND, EXTEND OR ALTER THE COVERAGE AFFORDED BY THE POLICIES BELOW. THIS CERTIFICATE OF INSURANCE DOES NOT CONSTITUTE A CONTRACT BETWEEN THE ISSUING INSURER(S), AUTHORIZED REPRESENTATIVE OR PRODUCER, AND THE CERTIFICATE HOLDER.

IMPORTANT: If the certificate holder is an ADDITIONAL INSURED, the policy(ies) must have ADDITIONAL INSURED provisions or be endorsed. If SUBROGATION IS WAIVED, subject to the terms and conditions of the policy, certain policies may require an endorsement. A statement on this certificate does not confer any rights to the certificate holder in lieu of such endorsement(s).

PRODUCER
USI Insurance Services LLC -CL
4630 North Loop 1604 West
Suite 410
San Antonio, TX 78249

CONTACT NAME: Danelle Touchstone
PHONE (A/C, No, Ext): 210 524-2094 FAX (A/C, No): 610-537-1904
E-MAIL ADDRESS: danelle.touchstone@usi.com

INSURER(S) AFFORDING COVERAGE	NAIC #
INSURER A : Lloyd's of London	SURPLU
INSURER B : Hartford - WC Multiple Issuing Cos	00914
INSURER C : Sentinel Insurance Company Ltd.	11000
INSURER D :	
INSURER E :	
INSURER F :	

INSURED
INTERA Incorporated
9600 Great Hills Trl
Suite 300W
Austin, TX 78759

COVERAGES CERTIFICATE NUMBER: REVISION NUMBER:

THIS IS TO CERTIFY THAT THE POLICIES OF INSURANCE LISTED BELOW HAVE BEEN ISSUED TO THE INSURED NAMED ABOVE FOR THE POLICY PERIOD INDICATED. NOTWITHSTANDING ANY REQUIREMENT, TERM OR CONDITION OF ANY CONTRACT OR OTHER DOCUMENT WITH RESPECT TO WHICH THIS CERTIFICATE MAY BE ISSUED OR MAY PERTAIN, THE INSURANCE AFFORDED BY THE POLICIES DESCRIBED HEREIN IS SUBJECT TO ALL THE TERMS, EXCLUSIONS AND CONDITIONS OF SUCH POLICIES. LIMITS SHOWN MAY HAVE BEEN REDUCED BY PAID CLAIMS.

INSR LTR	TYPE OF INSURANCE	ADDL INSR	SUBR WVD	POLICY NUMBER	POLICY EFF (MM/DD/YYYY)	POLICY EXP (MM/DD/YYYY)	LIMITS	
A	X COMMERCIAL GENERAL LIABILITY			ENVP000025424	06/01/2024	06/01/2025	EACH OCCURRENCE	$1,000,000
	CLAIMS-MADE X OCCUR						DAMAGE TO RENTED PREMISES (Ea occurrence)	$300,000
	X Pollution Liability						MED EXP (Any one person)	$25,000
	X BI/PD DED $10,000						PERSONAL & ADV INJURY	$1,000,000
	GEN'L AGGREGATE LIMIT APPLIES PER:						GENERAL AGGREGATE	$2,000,000
	POLICY X PRO-JECT X LOC						PRODUCTS - COMP/OP AGG	$2,000,000
	OTHER:							$
C	AUTOMOBILE LIABILITY			65UECZR3402	06/01/2024	06/01/2025	COMBINED SINGLE LIMIT (Ea accident)	$1,000,000
	X ANY AUTO						BODILY INJURY (Per person)	$
	OWNED AUTOS ONLY / SCHEDULED AUTOS						BODILY INJURY (Per accident)	$
	X HIRED AUTOS ONLY / X NON-OWNED AUTOS ONLY						PROPERTY DAMAGE (Per accident)	$
								$
A	UMBRELLA LIAB X OCCUR			ENVX000020624	06/01/2024	06/01/2025	EACH OCCURRENCE	$6,000,000
	X EXCESS LIAB CLAIMS-MADE						AGGREGATE	$6,000,000
	DED RETENTION $							$
B	WORKERS COMPENSATION AND EMPLOYERS' LIABILITY			65WBOL6H7Y	06/01/2024	06/01/2025	X PER STATUTE / OTH-ER	
	ANY PROPRIETOR/PARTNER/EXECUTIVE OFFICER/MEMBER EXCLUDED? Y/N N / N/A						E.L. EACH ACCIDENT	$1,000,000
	(Mandatory in NH)						E.L. DISEASE - EA EMPLOYEE	$1,000,000
	If yes, describe under DESCRIPTION OF OPERATIONS below						E.L. DISEASE - POLICY LIMIT	$1,000,000
A	Professional Liab			ENVP000025424	06/01/2024	06/01/2025	$2,000,000 Aggregate	
							$1,000,000 Per Claim	
				Retroactive Date	01/10/2002		$100,000 Deductible	

DESCRIPTION OF OPERATIONS / LOCATIONS / VEHICLES (ACORD 101, Additional Remarks Schedule, may be attached if more space is required)
RE: Contract ID SHR000022790 RFB-2022-322-DSW-CG
The Excess Policy sits over the General Liability, Automobile Liability and Professional Liability limits.
Professional Liability is on a claims-made basis.
The General Liability and Automobile Liability policies include a blanket Additional Insured endorsement that provides Additional Insured status to City of Santa Fe when there is a written contract that requires
(See Attached Descriptions)

CERTIFICATE HOLDER
City of Santa Fe
801 W. San Mateo
Santa Fe, NM 87505

CANCELLATION
SHOULD ANY OF THE ABOVE DESCRIBED POLICIES BE CANCELLED BEFORE THE EXPIRATION DATE THEREOF, NOTICE WILL BE DELIVERED IN ACCORDANCE WITH THE POLICY PROVISIONS.

AUTHORIZED REPRESENTATIVE

© 1988-2015 ACORD CORPORATION. All rights reserved.

DESCRIPTIONS (Continued from Page 1)

such status and only with regard to work performed on behalf of the named insured.
A thirty (30) days prior written notice of cancellation to certificate holder applies when required by written contract. The General Liability and Automobile Liability policies contain a special endorsement with Primary and Noncontributory wording when required by written contract.

Signature: Lawrence Garcia

Email: lmgarcia@santafenm.gov

City of Santa Fe, New Mexico

memo

Date: October 29, 2024

To: Public Works and Utilities Committee / Finance Committee / City Council

Via: John Dupuis, Public Utilities Department Director
Jesse D. Roach, Water Division Director

From: Michael R. Moya, T&D Section Manager
Bill Huey, Water Division Engineer

Subject: Request approval of Amendment No. 2 to Price Agreement Item # 23-0183 with A.A.C. Construction LLC (AAC) to Increase Maximum Compensation by $1,581,875.00 for a New Total Contract Amount of $5,041,875.30 including NMGRT (Bill Huey, Engineer, bchuey@santafenm.gov)

Vendor Name: A.A.C. Construction LLC

Vendor Number: 7958

Contract Number: 3202927

ITEM AND ISSUE:

The Public Utilities Department, Water Division requests approval of Amendment No. 2 to Price Agreement Item # 23-0183 with A.A.C. Construction LLC (AAC) to Increase Maximum Compensation by $1,581,875.00 for a New Total Contract Amount of $5,041,875.30 including NMGRT with No Corresponding Change to the Term of the Agreement. (Bill Huey, Engineer, bchuey@santafenm.gov)

ACTION REQUESTED:

Approval of Amendment No. 2 to Price Agreement # 23-0183

BACKGROUND AND SUMMARY:

In July 2021, City Council awarded bid number '21/43/B for the Priority Line Replacement Price Agreement, CIP # 3058 to both A.A.C. Construction LLC (AAC) and Sub Surface Contracting Inc. for four (4) Fiscal Years, FY 2021-22 until FY2024-25 at the initial funding amount of $3,500,000 inclusive of NMGRT. Future funding was dependent upon the availability of CIP funds.

The Priority Line Replacement Price Agreement is an on-call requirements contract, with the Water Division issuing work orders as needed for work such as water line replacements. The contract is funded from CIP for Transmission and Distribution to work on their infrastructure.

The Water Division historically planned to upgrade pressure reducing valve vaults but has not done so in the last few years. We request adding a total of $1,000,000 to this contract, $500,000.00 for each contractor to begin this upgrade program again.

The Water Division is requesting approval of $1,581,875.00 (including NMGRT) additional funding to allow for this Fiscal Year's work to be conducted.

PROCUREMENT METHOD:

ITB/PA No. '21/43/B FY 21/22 Priority Line Replacement Price Agreement, CIP # 3058 approved by City Council on 7/28/2021.

Chief Procurement Officer Approval: _____ **Date:** _____
Comment/Exceptions: _____

Supporting Information:

CONTRACT NUMBER:
The FY25 Munis contract number for AAC is 3202927
The FY25 Project ledger number for Priority Line Replacement is WTR2550521

$$$$$ SOURCE/REVENUE: ☒Expense ☐Revenue

The funding source is:
Fund Name/Number: Water Enterprise Fund/Fund 500
Munis Org Name/Number: Water CIP/5050395
Munis Object Name/Number: WIP Construction/572970

If the project is grant funded? List grant award number*:* _____

Grant Manager / Accounting Officer Approval: _____ **Date:** _____
Comment/Exceptions: _____

Project Ledger #: _____

Budget Officer Approval: Andy Hopkins **Date:** Oct 31, 2024
Comment/Exceptions: _____

CAPITAL ASSET (will this procurement result in a tangible item that costs more than $5,000?):

☒Yes | ☐ No

 # (if known): _____

Repair or Replacement of Existing Equipment:

☒Yes | ☐ No
If yes -> ☒Repair | ☒ Replacement

Please explain: Contract is used to repair main water line breaks and replace smaller sections of main water lines.

Capital Project:
(New and improvement projects that are going to cost $10,000 or more)
☒ Yes | ☐ No

Project Ledger #: _____

Anticipated length of project: To be determined _____

Asset Manager Approval: _____ **Date:** _____
Comment/Exceptions: _____

Department Approvals:
IT Components: ☐ **Yes |** ☒ **No**
Vehicles: ☐ **Yes |** ☒ **No**
Facilities, Furniture, Fixtures, Equipment: ☐ **Yes |** ☒ **No**

Approval: _____ **Title:** _____ **Date**: _____
Approval: _____ **Title:** _____ **Date**: _____
Comment & Exceptions: _____

Department Contract Administrator Contact Info:

Gina Wolff
vawolff@santafenm.gov

ATTACHMENTS:
Contract 3202927 Amendment No. 2
Budget Amendment Request (BAR)

cc:

Log # *{Finance use only}* :	
Journal # *{Finance use only}* :	

City of Santa Fe, New Mexico
BUDGET AMENDMENT RESOLUTION (BAR)

DEPARTMENT / DIVISION NAME	DATE
Public Utilities Department / Water Division	10/28/2024

ITEM DESCRIPTION	ORG	OBJECT	PROJECT	INCREASE	DECREASE
EXPENDITURES				*{enter as positive #}*	*{enter as negative #}*
Water Cap Proj, WIP Construction	5050395	572970	WTR2550521	1,581,875	
REVENUES				*{enter as negative #}*	*{enter as positive #}*
				$ 1,581,875	$ -

JUSTIFICATION: *(use additional page if needed)*
--Attach supporting documentation/memo

Please see attached Memo.

Contract (3202927) with A.A.C. Construction LLC for priority line repairs Amendment No. 2

{Complete section below if BAR results in a net change to ANY Fund}

Fund(s) Affected	Fund Balance Increase/(Decrease)
505	(1,581,875)
TOTAL:	**(1,581,875)**

Jonna Leigh Stack for Bill Huey — 10/29/2024
Prepared By *{print name}* — Date

Oct 31, 2024
Division Director Signature *{optional}* — Date

John Dupuis (Oct 31, 2024 15:27 MDT) Oct 31, 2024
Department Director Signature, John Dupuis — Date

{Use this form for Finance Committee/ City Council agenda items ONLY}

CITY COUNCIL APPROVAL

City Council Approval Date

Agenda Item #:

Andy Hopkins — Oct 31, 2024
Budget Officer — Date

Finance Director *{≤ $5,000}* — Date

City Manager *{≤ $60,000}* — Date

Client#: 2003588 AACCON2

ACORD™ CERTIFICATE OF LIABILITY INSURANCE

DATE (MM/DD/YYYY): 08/01/2024

THIS CERTIFICATE IS ISSUED AS A MATTER OF INFORMATION ONLY AND CONFERS NO RIGHTS UPON THE CERTIFICATE HOLDER. THIS CERTIFICATE DOES NOT AFFIRMATIVELY OR NEGATIVELY AMEND, EXTEND OR ALTER THE COVERAGE AFFORDED BY THE POLICIES BELOW. THIS CERTIFICATE OF INSURANCE DOES NOT CONSTITUTE A CONTRACT BETWEEN THE ISSUING INSURER(S), AUTHORIZED REPRESENTATIVE OR PRODUCER, AND THE CERTIFICATE HOLDER.

IMPORTANT: If the certificate holder is an ADDITIONAL INSURED, the policy(ies) must have ADDITIONAL INSURED provisions or be endorsed. If SUBROGATION IS WAIVED, subject to the terms and conditions of the policy, certain policies may require an endorsement. A statement on this certificate does not confer any rights to the certificate holder in lieu of such endorsement(s).

PRODUCER
USI Southwest Inc. NM - CL
4100 Osuna Road NE Suite 2-203
Albuquerque, NM 87109
505 262-2621

CONTACT NAME: Isai Gomez
PHONE (A/C, No, Ext): 602-374-1341 **FAX (A/C, No):**
E-MAIL ADDRESS: isai.gomez@usi.com

INSURER(S) AFFORDING COVERAGE	NAIC #
INSURER A : Donegal Mutual Insurance Company	13692
INSURER B : New Mexico Mutual Casualty Company	40627
INSURER C :	
INSURER D :	
INSURER E :	
INSURER F :	

INSURED
A.A.C. Construction, LLC
18 La Luna Rd
Santa Fe, NM 87507

COVERAGES **CERTIFICATE NUMBER:** **REVISION NUMBER:**

THIS IS TO CERTIFY THAT THE POLICIES OF INSURANCE LISTED BELOW HAVE BEEN ISSUED TO THE INSURED NAMED ABOVE FOR THE POLICY PERIOD INDICATED. NOTWITHSTANDING ANY REQUIREMENT, TERM OR CONDITION OF ANY CONTRACT OR OTHER DOCUMENT WITH RESPECT TO WHICH THIS CERTIFICATE MAY BE ISSUED OR MAY PERTAIN, THE INSURANCE AFFORDED BY THE POLICIES DESCRIBED HEREIN IS SUBJECT TO ALL THE TERMS, EXCLUSIONS AND CONDITIONS OF SUCH POLICIES. LIMITS SHOWN MAY HAVE BEEN REDUCED BY PAID CLAIMS.

INSR LTR	TYPE OF INSURANCE	ADDL INSR	SUBR WVD	POLICY NUMBER	POLICY EFF (MM/DD/YYYY)	POLICY EXP (MM/DD/YYYY)	LIMITS	
A	X COMMERCIAL GENERAL LIABILITY	X	X	CPT9557153	01/01/2024	01/01/2025	EACH OCCURRENCE	$2,000,000
	CLAIMS-MADE X OCCUR						DAMAGE TO RENTED PREMISES (Ea occurrence)	$500,000
	X PD Ded:1,000						MED EXP (Any one person)	$15,000
							PERSONAL & ADV INJURY	$2,000,000
	GEN'L AGGREGATE LIMIT APPLIES PER:						GENERAL AGGREGATE	$4,000,000
	POLICY X PRO-JECT LOC						PRODUCTS - COMP/OP AGG	$4,000,000
	OTHER:							$
A	AUTOMOBILE LIABILITY	X	X	1000111796	01/01/2024	01/01/2025	COMBINED SINGLE LIMIT (Ea accident)	$1,000,000
	X ANY AUTO						BODILY INJURY (Per person)	$
	OWNED AUTOS ONLY / SCHEDULED AUTOS						BODILY INJURY (Per accident)	$
	X HIRED AUTOS ONLY / X NON-OWNED AUTOS ONLY						PROPERTY DAMAGE (Per accident)	$
								$
A	X UMBRELLA LIAB X OCCUR			CXL9557153	01/01/2024	01/01/2025	EACH OCCURRENCE	$5,000,000
	EXCESS LIAB CLAIMS-MADE						AGGREGATE	$5,000,000
	DED X RETENTION $0							$
B	WORKERS COMPENSATION AND EMPLOYERS' LIABILITY Y / N		X	93890109	04/04/2024	01/01/2025	X PER STATUTE / OTH-ER	
	ANY PROPRIETOR/PARTNER/EXECUTIVE OFFICER/MEMBER EXCLUDED? Y	N / A					E.L. EACH ACCIDENT	$1,000,000
	(Mandatory in NH)						E.L. DISEASE - EA EMPLOYEE	$1,000,000
	If yes, describe under DESCRIPTION OF OPERATIONS below						E.L. DISEASE - POLICY LIMIT	$1,000,000
A	Leased/ Rented Equipment			CPT9557153	01/01/2024	01/01/2025	$336,611 - Limit $1,000 - Deductible	

DESCRIPTION OF OPERATIONS / LOCATIONS / VEHICLES (ACORD 101, Additional Remarks Schedule, may be attached if more space is required)

The General Liability and Automobile policies include an automatic Additional Insured endorsement that provides Additional Insured status to the Certificate Holder, only when there is a written contract or written agreement between the named insured and the certificate holder and with regard to work performed by or on behalf of the named insured.
The Genreral Liability, Automobile, and Workers Compensation policies provide a Blanket Waiver of
(See Attached Descriptions)

CERTIFICATE HOLDER
City of Santa Fe Water Division
801 W. San Mateo
Santa Fe, NM 87505

CANCELLATION
SHOULD ANY OF THE ABOVE DESCRIBED POLICIES BE CANCELLED BEFORE THE EXPIRATION DATE THEREOF, NOTICE WILL BE DELIVERED IN ACCORDANCE WITH THE POLICY PROVISIONS.

AUTHORIZED REPRESENTATIVE

© 1988-2015 ACORD CORPORATION. All rights reserved.

DESCRIPTIONS (Continued from Page 1)

Subrogation in favor of the same, when required by written contract.
The General Liability policy contains a special endorsement with "Primary and Noncontributory" wording, when required by written contract.
The Inland Marine policy includes a Loss Payee endorsement that provides Loss Payee status to the Certificate holder as respects to the above referenced.

RE: Various Jobs and Projects

Item # 23-0183
Munis # 3202927

CITY OF SANTA FE
AMENDMENT No. 1 TO
THE AGREEMENT
ITEM# 21-0483

AMENDMENT No. 1 (the "Amendment") to the CITY OF SANTA FE AGREEMENT, dated September 8, 2021 (the "Agreement"), between the City of Santa Fe (the "City") and AAC Construction, LLC, (the "Contractor"). The date of this Amendment shall be the date when it is executed by the City and the Contractor whichever occurs last.

RECITALS

A. Under the terms of the Agreement, Contractor has agreed to provide Priority Line Replacement work for the City of Santa Fe.

B. Pursuant to Article 14 of the Agreement, and for good and valuable consideration, the receipt and sufficiency of which are acknowledged by the parties, the City and the Contractor agree as follows:

1. COMPENSATION.

Article 2, paragraph A of the Agreement is amended to increase the amount of compensation by a total of two million two hundred and ten thousand dollars ($2,210,000) including applicable gross receipts tax, so that Article 2, paragraph A reads in its entirety:

A. The City shall pay to the Contractor in full payment for services satisfactorily performed at total amount up to one million one hundred and ninety three thousand one hundred and sixty two dollars and seventy five cents ($3,193,162.75). The New Mexico gross receipts tax levied on the amounts payable under this Agreement totaling two hundred and sixty six thousand eight hundred and thirty seven dollars and twenty five cents. ($266,837.25) shall be paid by the City to the Contractor as described in Exhibit A attached hereto. **The total amount payable to the Contractor under this Agreement, including gross receipts tax and expenses, shall not exceed three million four hundred and sixty thousand dollars ($3,460,000). This amount is a maximum and not a guarantee that the work assigned to be performed by Contractor under this Agreement shall equal the amount stated herein. The parties do not intend for the Contractor to continue to provide services without**

compensation when the total compensation amount is reached. Contractor is responsible for notifying the City when the services provided under this Agreement reach the total compensation amount. In no event will the Contractor be paid for services provided in excess of the total compensation amount without this Agreement being amended in writing prior to those services in excess of the total compensation amount being provided.

2. AGREEMENT IN FULL FORCE.

Except as specifically provided in this Amendment, the Agreement remains and shall remain in full force and effect, in accordance with its terms.

IN WITNESS WHEREOF, the parties have executed this Amendment No. 1 to the City of Santa Fe Agreement as of the dates set forth below.

CITY OF SANTA FE:

ALAN WEBBER, MAYOR

Date: Apr 30, 2023

CONTRACTOR:
AAC Construction, LLC

Andrew Sisneros

Digitally signed by Andrew Sisneros
DN: cn=Andrew Sisneros, o=A.A.C. Construction, LLC, ou, email=andrew@cnsp.net, c=US
Date: 2023-03-28 06:08:49 -06'00'

Managing Member

NAME & TITLE

Date: 3-28-2023

CRS# 03-157349-00-5
Registration # 19-00127501

ATTEST:

KRISTINE BUSTOS MIHELCIC, CITY CLERK XIV
GB MTG 04/26/23

CITY ATTORNEY'S OFFICE:

Patricia Feghali
ASSISTANT CITY ATTORNEY

APPROVED FOR FINANCES:

Emily K. Oster
Emily K. Oster (Apr 5, 2023 18:22 MDT)

Apr 5, 2023

EMILY OSTER, FINANCE DIRECTOR

5050395.572970 WTR1950536
Org/Obj

City of Santa Fe

Real Estate Summary of Contracts, Agreements, Amendments & Leases

Section to be completed by department

1. Munis Contract # 3202927

Contractor: A.A.C Construction

Description: CIP# 3058 Priority Line Replacement

Contract ☐ Agreement ☉ Lease / Rent ☐ Amendment ☐

Term Start Date: as approved Term End Date: 6/30/25

☑ Approved by Council Date: Pending

Contract / Lease: Contract $1,250,000

Amendment # 1 to the Original Contract / Lease # 21-0483

Increase/(Decrease) Amount $ $3,460,000

Extend Termination Date to: N/A

☉ Approved by Council Date: Pending

Amendment is for:

2. **HISTORY of Contract, Amendments & Lease / Rent - Please Elaborate** (option: attach spreadsheet if multiple amendments)

Original Contract # 21-0483 $1,250,000 approved 9/8/21

3. **Procurement History:** 21/43/B

For Apr 5, 2023

Purchasing Officer Review: Date:

Comment & Exceptions: amending compensation

4. **Funding Source:** Water Enterprise Fund CIP **Org / Object:** 5050395.572970

Andy Hopkins (Apr 5, 2023 17:31 MDT) Apr 5, 2023

Budget Officer Approval: Date:

Comment & Exceptions:

Staff Contact who completed this form: Maya Martinez Phone # 4271

Email: mfmartinez@santafenm.gov

To be recorded by City Clerk:

Clerk # _____

Date of Execution: _____

City of Santa Fe

Treasury Department
200 Lincoln Ave.
Santa Fe, New Mexico 87504-0909
505-955-6551

BUSINESS REGISTRATION

Business Name: A.A.C. CONSTRUCTION LLC
DBA: A.A.C. CONSTRUCTION LLC

Business Location: 18 LA LUNA RD
SANTA FE, NM 87507

CRS Number: 03157349-00-5

Owner: Andrew Sisneros

License Number: 222939

License Type: Business License - Renewable

Issued Date: May 20, 2022

Classification: Out of Jurisdiction Contractor - General

Expiration Date: May 20, 2023

Fees Paid: $10.00

A.A.C. CONSTRUCTION LLC
18 LA LUNA RD LA LUNA
SANTA FE , NM 87507

THIS IS NOT A CONSTRUCTION PERMIT OR SIGN PERMIT. APPROPRIATE PERMITS MUST BE OBTAINED FROM THE CITY OF SANTA FE BUILDING PERMIT DIVISION PRIOR TO COMMENCEMENT OF ANY CONSTRUCTION OR THE INSTALLATION OF ANY EXTERIOR SIGN.

THIS REGISTRATION/LICENSE IS NOT TRANSFERRABLE TO OTHER BUSINESSES OR PREMISES.

TO BE POSTED IN A CONSPICUOUS PLACE

Ver 1c 2 7 2020

CITY OF SANTA FE PROCUREMENT CHECKLIST

Contractor Name: A.A.C Contractors

Procurement Title: 21/43/B Priority Line Replacement Price Agreement, CIP # 3058

Procurement Method: State Price Agreement ☐ *Cooperative* ☐ *Sole Source* ☐ *Other* ☐ _____

Exempt ☐ *Request For Proposal* (RFP) ☒ *Invitation To Bid (ITB)* ☐ *Contract under 60K* ☐ *Contract over 60K* ☐

Department Requesting Bill Huey Water Division, PUD

Procurement Requirements:
A procurement file shall be maintained for all contracts, regardless of the method of procurement. The procurement file shall contain the basis on which the award is made, all submitted bids, all evaluation materials, score sheets, quotations and all other documentation related to or prepared in conjunction with evaluation, negotiation, and the award process. The procurement shall contain a written determination from the Requesting Department, signed by the purchasing officer, setting forth the reasoning for the contract award decision before submitting to the Committees. .

REQUIRED DOCUMENTS FOR APPROVAL BY PURCHASING*

YES	N/A	
☒	☐	Approved Procurement Checklist (by Purchasing)
☒	☐	Memo addressed to City Manager (under 60K) Committees/City Council (over 60K)
☐	☒	State Price Agreement
☐	☒	RFP
☐	☒	Evaluation Committee Report
☒	☐	ITB
☒	☐	Bib Tab
☐	☒	Quotes (3 valid current quotes)
☐	☒	Cooperative Agreement
☐	☒	Sole Source Request and Determination Form
☐	☒	Contractors Exempt Letter
☒	☐	Purchasing Officers approval for exempt procurement
☐	☒	BAR
☐	☒	FIR
☒	☐	Executed Contract, Agreement or Amendment
☒	☐	Current Business Registration and CRS numbers on contract or agreement
☒	☐	Summary of Contracts and Agreements form
☐	☒	Certificate of Insurance
☐	☐	All documentation presented to Committees
☐	☐	Other: _____

Public Utilities Dept / Water Division/Bill Huey Bill Huey Engineer

Department Rep Printed Name (attesting that all information included) Title Date

for Apr 5, 2023

Purchasing Officer (attesting that all information is reviewed) Title Date

Include all other substantive documents and records of communication that pertain to the procurement and any resulting contract.

*

Log # *{Finance use only}*:	
Batch # *{Finance use only}*:	

City of Santa Fe, New Mexico
BUDGET AMENDMENT RESOLUTION (BAR)

DEPARTMENT / DIVISION NAME	DATE
PUD/Water/CIP	3/17/2023

ITEM DESCRIPTION	ORG	OBJECT	PROJECT	INCREASE	DECREASE
EXPENDITURES				*{enter as positive #}*	*{enter as negative #}*
Water CIP WIP Construction	5050395	572970	WTR1950535	5,000,000	
REVENUES				*{enter as negative #}*	*{enter as positive #}*
				$ 5,000,000	$ -

JUSTIFICATION: *(use additional page if needed)*
--Attach supporting documentation/memo

Budget Increase from Cash Balance in Water Enterprise Fund for Priority Line Replacement

Price Agreements Amendments #1 to A.A.C Construction and Sub Surface for

FY 23 CIP3058

{Complete section below if BAR results in a net change to ANY Fund}

Fund(s) Affected	Fund Balance Increase/(Decrease)
505	(5,000,000)
TOTAL:	**(5,000,000)**

Maya Martinez — 3/17/2023
Prepared By *{print name}* — Date

Division Director Signature *{optional}* — Date

John Dupuis (Apr 4, 2023 17:41 MDT)
Department Director Signature — Date

{Use this form for Finance Committee/ City Council agenda items ONLY}

CITY COUNCIL APPROVAL

City Council Approval Date

Agenda Item #:

Andy Hopkins — 4/5/23
Budget Officer — Date

Finance Director *{≤ $5,000}* — Date

City Manager *{≤ $60,000}* — Date

City of Santa Fe, New Mexico

memo

Date: August 9, 2021

To: Public Works-Public Utilities Committee / Finance Committee

From: Michael R. Moya, T&D Section Manager MM
Bill Huey, Water Division Engineer Associate BH

Via: Jesse D. Roach, Water Division Director

RE: Request to award bid number '21/43/B for the FY 2022 Priority Line Replacement Price Agreement, CIP # 3058 to Sub Surface Contracting, Inc. and A.A.C. Construction, LLC.; Request approval of a Budget Adjustment Request/Budget increase in the amount of $3,500,000.

ITEM AND ISSUE:

The Water Division requests award of bid number '21/43/B for the FY 21/22 Priority Line Replacement Price Agreement, CIP # 3058 to Sub Surface Contracting, Inc. and A.A.C. Construction, LLC for the remainder of four (4) Fiscal Years, FY 2021-22 until FY2024-25. Initial funding of $3,500,000 inclusive NMGRT is requested for FY2021-22. Funding is broken down for each contractor as follows: $2,250,000.00 inclusive of NMGRT for Sub Surface and $1,250,000.00 inclusive of NMGRT for AAC. .Future funding will depend upon the availability of CIP funds.

BACKGROUND AND SUMMARY:

The Priority Line Replacement Price Agreement is an on-call requirements contract, with the Water Division issuing work orders as needed for work such as water line replacements. The contract is funded from CIP for Transmission and Distribution to work on their infrastructure. The initial Contract amount is limited to $3,500,000.00 inclusive of New Mexico Gross Receipt Tax (NMGRT).

This is was multi-contractor award ITB to set the applicable Bid Items for future work. The ITB was only used to select the winning Contractors. Future work will be assigned under fully signed Work Orders for planned work on will be followed with a signed Work Order for Emergency repair. The exact type of work required will be used to select from the applicable Bid Items. Not every Bit Item is anticipated to be used.

The initial contract period is Fiscal Years 2021-2025. The bids for this project were opened on June 17, 2021 and were subsequently evaluated for completeness and accuracy. The low bid in the amount of $892,448.25 plus NMGRT was submitted by Sub Surface Contracting, Inc. A second acceptable bid of $933,364.22 was submitted by A.A.C. Construction, LLC. The Water Division is planning on replacing pipe on multiple streets in the Apache, San Ildefonso, San Felipe, MaClovia, Isabel and Rosina neighborhood, as well as Bishops Lodge between Artist and Murales Roads, Lorenzo Road, Malaga

Lane, Pino Road, San Isabel Street, Sosaya Street, Camino Santander and Camino Santiago/Camino Matias.

A summary of the bids is provided below:

Bidders	Total Bid without NMGRT	Bid Including Veterans preference without NMGRT
Sub Surface Contracting, Inc.	$892,448.25	$821,052.39
A.A.C. Construction, LLC	$933,364.22	
TLC Plumbing & Utility	$1,158,308.40	
Blueline Construction, Inc.	$1,476,101.57	
Allied 360 Construction, LLC	$2,364,321.74	

CONTRACT NUMBER:
The FY22 Munis contract number:
Sub Surface Contracting # 3202929
A.A.C Construction # 3202927

FUNDING SOURCE:
The funding source is:
Water Enterprise Fund/ CIP
FY 2022
Fund Name/Number: Water Enterprise Fund/ 500
Munis Org Name/Number: Water CIP / 5050395
Munis Object Name/Number: WIP Construction / 572970

Funds for this work will be available in Business Unit, Line Item 5050395.572970 in the amount of $1,600,000.00 plus NMGRT upon approval of the BAR Budget Increase.

RECOMMENDATION:

The Water Division recommends:

- Review and approval of award of contracts to Sub Surface Contracting, Inc. and A.A.C Construction, LLC for the FY 21/22 Priority Line Replacement Price Agreement, CIP # 3058 under ITB No. '21/43/B for a total amount of $3,500,000.00 inclusive of NMGRT for FY2021-22.

- Approval of the BAR – Budget Increase in the amount of $3,500,000 from the Water Enterprise Fund cash balance into the Water CIP fund for FY 2022.

- Forwarding and recommendation of approval of award and contract to the Finance Committee for their consideration and approval to the Governing Body for their final consideration and approval.

Log # *{Finance use only}*:	
Batch # *{Finance use only}*:	

City of Santa Fe, New Mexico
BUDGET AMENDMENT RESOLUTION (BAR)

DEPARTMENT / DIVISION NAME	DATE
PUD/Water/CIP	8/17/2021

ITEM DESCRIPTION	ORG	OBJECT	PROJECT	INCREASE	DECREASE
EXPENDITURES				*{enter as positive #}*	*{enter as negative #}*
Water CIP WIP Construction	5050395	572970	WTR1950535	3,500,000	
REVENUES				*{enter as negative #}*	*{enter as positive #}*
				$ 3,500,000	$ -

JUSTIFICATION: *(use additional page if needed)*
--Attach supporting documentation/memo

Budget Increase from Cash Balance in Water Enterprise Fund for Priority Line Replacement

Price Agreements Award of Bid 21/43/B to A.A.C Construction and Sub Surface for

FY 2022 CIP3058

{Complete section below if BAR results in a net change to ANY Fund}	
Fund(s) Affected	Fund Balance Increase/(Decrease)
505	(3,500,000)
TOTAL:	**(3,500,000)**

Maya Martinez 8/17/2021
Prepared By *{print name}* Date

Division Director Signature *{optional}* Date

Shannon Jones 3/19/2021
Department Director Signature Date

{Use this form for Finance Committee/ City Council agenda items ONLY}

CITY COUNCIL APPROVAL

City Council Approval Date

Agenda Item #:

Andy Hopkins 8/20/21
Andy Hopkins (Aug 20, 2021 11:52 MDT)
Budget Officer Date

Finance Director *{≤ $5,000}* Date

City Manager *{≤ $60,000}* Date

Item# 21-0483
Munis Contract# 3202927

CITY OF SANTA FE

PRIORITY LINE REPLACEMENTPRICE
AGREEMENT

CIP # 3058

THIS AGREEMENT is made and entered into by and between the City of Santa Fe, New Mexico, hereinafter referred to as the "City," and **A.A.C. CONSTRUCTION**., hereinafter referred to as the Contractor, and is effective as of the date set forth below upon which it is executed by the Parties.

IT IS AGREED BETWEEN THE PARTIES:

1. **Scope of Work.**

A. The Contractor shall perform the following work and as described is Exhibit A attached hereto:

1) The Contractor shall perform all the work required by Water Division as required in the Contract Documents for Priority Line Replacement Contract. The work consists of, but is not limited to furnishing all equipment, labor and materials for the construction and repair of water mains, valves, hydrants, metered water service lines and settings, pressure reducing valves, vaults, and other incidental work such as pavement removal and replacement, traffic control all as required to extend, replace or repair water distribution, water storage, and water supply infrastructure, in accordance with the drawings, specifications, and other Contract Documents. All water piping shall be new, poly-wrapped ductile iron, unless otherwise specified.

2) The Contractor shall be responsible for verifications of all measurements and dimensions for bidding on each subsequent Work Order.

3) The Contractor shall provide and keep at the work site a complete "as built" record set of drawings that shall be corrected daily and shall show every change from the original approved drawings and specifications. These changes shall be forwarded to City periodically. The drawings shall reflect exact and actual "as-built" conditions of construction, installation, and erection as it progresses. Where drawings are not adequate to show "as built" conditions. Contractor shall prepare sketches which delineate the necessary "asbuilt" information. City shall furnish two (2) sets of all paper "blue-line" print "approved" drawings for use in accomplishing specified mark up. Final "as built" drawings shall be delivered to City by Contractor upon completion of the work.

4) The Contractor shall be responsible for maintaining traffic control at the site in conformance with the Manual on Uniform Traffic Control Devices.

5) The Contractor shall be responsible for all permits, fees, and State andCity inspections associated with the construction.

6) Incorporation by Reference. All exhibits, addenda, schedules of ITB 21/XX/B attached hereto and all certificates, work order documents, drawings, as-built and other

instruments contemplated to be delivered hereunder are hereby expressly made a part of this Agreement as fully as though set forth herein, and all references to this Agreement herein orin any of such writings shall be deemed to refer to and include all of such writings. This Agreement contains the entire agreement between the parties with respect to the subject matter hereof and supersedes all prior agreements and understandings, both written and oral, among the parties with respect to the subject matter hereof. If there is any conflict between such exhibits or addenda and the terms of this Agreement, such exhibits or addenda shall control.

2. Compensation.

A. The City shall pay to the Contractor in full payment for services satisfactorily performed at total amount up to one million one hundred fifty two thousand seven hundred thirty seven dollars and seventy-five cents ($1,152,737.75). The New Mexico gross receipts tax levied on the amounts payable under this Agreement totaling ninety seven thousand two hundred sixty two dollars and twenty five cents ($97,262.25) shall be paid by the City to the Contractor as described in Exhibit A attached hereto. **The total amount payable to the Contractor under this Agreement, including gross receipts tax and expenses, shall not exceed one million two hundred fifty thousand dollars ($1,250,000)). This amount is a maximum and not a guarantee that the work assigned to be performed by Contractor under this Agreement shall equal the amount stated herein. The parties do not intend for the Contractor to continue to provide services without compensation when the total compensation amount is reached. Contractor is responsible for notifying the City when the services provided under this Agreement reach the total compensation amount. In no event will the Contractor be paid for services provided in excess of the total compensation amount without this Agreement being amended in writing prior to those services in excess of the total compensation amount being provided.**

B. Payment is subject to availability of funds pursuant to the Appropriations Paragraph set forth below and to any negotiations between the parties from year to year pursuant to Paragraph 1, Scope of Work, and to approval by the City. All invoices MUST BE received by the City no later than thirty 30) days after the termination of the Fiscal Year in which the services were delivered. Invoices received after such date WILL NOT BE PAID.

C. Contractor must submit a detailed statement accounting for all services performed and expenses incurred. If the City finds that the services are not acceptable, within thirty days after the date of receipt of written notice from the Contractor that payment is requested, it shall provide the Contractor a letter of exception explaining the defect or objection to the services, and outlining steps the Contractor may take to provide remedial action. Upon certification by the City that the services have been received and accepted, payment shall be tendered to the Contractor within thirty days after the date of acceptance. If payment is made by mail, the payment shall be deemed tendered on the date it is postmarked. However, the City shall not incur late charges, interest, or penalties for failure to make payment within the time specified herein.

3. Term.

THIS AGREEMENT SHALL NOT BECOME EFFECTIVE UNTIL APPROVED BY THE CITY. This Agreement shall terminate on **June 30, 2025** unless terminated pursuant to paragraph 4 (Termination), or paragraph 5 (Appropriations). In accordance with Section 13-1-150 NMSA 1978, no contract term for a professional services contract, including extensions and renewals, shall exceed four years, except as set forth in Section 13-1-150 NMSA 1978.

4. Termination.

A. Termination. This Agreement may be terminated by either of the parties hereto upon written notice delivered to the other party at least thirty (30) days prior to the intended dateof termination. Except as otherwise allowed or provided under this Agreement, the City sole liability upon such termination shall be to pay for acceptable work performed prior to the Contractor's receipt

of the notice of termination, if the City is the terminating party, or the Contractors receipt of the notice of termination, if the Contractor is the terminating party; provided, however, that a notice of termination shall not nullify or otherwise affect either party'sliability for pre-termination defaults under or breaches of this Agreement. The Contractor shall submit an invoice for such work within thirty (30) days of receiving or sending the notice of termination. Notwithstanding the foregoing, this Agreement may be terminated immediately upon written notice to the Contractor if the Contractor becomes unable to perform the services contracted for, as determined by the City or if, during the term of this Agreement, the Contractor or any of its officers, employees or agents is indicted for fraud, embezzlement or other crime dueto misuse of City funds or due to the Appropriations paragraph herein. *THIS PROVISION JS NOT EXCLUSIVE AND DOES NOT WAIVE THE OTHER LEGAL RIGHTS AND REMEDIES CAUSED BY THE CONTRACTOR'S DEFAULT/BREACH OF THIS AGREEMENT.*

B. Termination Management. Immediately upon receipt by either the City or the Contractor of notice of termination of this Agreement, the Contractor shall: 1) not incur any further obligations for salaries, services or any other expenditure of funds under this Agreement withoutwritten approval of the City; 2) comply with all directives issued by the City in the notice oftermination as to the performance of work under this Agreement; and 3) take such action as the City shall direct for the protection, preservation, retention or transfer of all property titled to theCity and records generated under this Agreement. Any non-expendable personal property orequipment provided to or purchased by the Contractor with contract funds shall become property of the City upon termination and shall be submitted to the City as soon as practicable.

5. Appropriations.

The terms of this Agreement are contingent upon sufficient appropriations and authorization being made by the City Council for the performance of this Agreement. If sufficient appropriations and authorization are not made by the City Council, this Agreement shall terminate immediately upon written notice being given by the City to the Contractor. The City's decision asto whether sufficient appropriations are available shall be accepted by the Contractor and shall be final. If the City proposes an amendment to the Agreement to unilaterally reduce funding, the Contractor shall have the option to terminate the Agreement or to agree to the reduced funding, within thirty (30) days of receipt of the proposed amendment.

6. Status of Contractor.

The Contractor and its agents and employees are independent contractors performing professional services for the City and are not employees of the City. The Contractor and its agents and employees shall not accrue leave, retirement, insurance, bonding, use of City vehicles, or anyother benefits afforded to employees of the City as a result of this Agreement. The Contractor acknowledges that all sums received hereunder are reportable by the Contractor for tax purposes, including without limitation, self-employment and business income tax. The Contractor agrees not to purport to bind the City unless the Contractor has express written authority to do so, and then only within the strict limits of that authority.

7. Construction Contract Performance and Payment Bond.

A. When a construction contract is awarded in excess of twenty-five thousand dollars ($25,000), the following bonds or security shall be delivered to the City and shall become binding on the parties upon the execution of the contract. If the Contractor fails to deliver the required performance and payment bonds, the Contractor's bid shall be rejected, its bid security shall be enforced to the extent of actual damages. Award of the contract shall be made pursuant to the Procurement Code in the following manner:

(1) a performance bond satisfactory to the City, executed by a surety company

authorized to do business in this state and said surety to be approved in federal circular 570 as published by the United States treasury department or the state board of finance or the local governing authority, in an amount equal to one hundred percent of the price specifiedin the contract; and

(2) a payment bond satisfactory to the City, executed by a surety company authorized to do business in this state and said surety to be approved in federal circular 570 as published by the United States treasury department or the state board of finance or the local governing authority, in an amount equal to one hundred percent of the price specifiedin the contract, for the protection of all persons supplying labor and material to the contractor or its subcontractors for the performance of the work provided for in the contract.

B. A subcontractor shall provide a performance and payment bond on a public works Building project if the subcontractor's contract for work to be performed on a project is one hundred twenty-five thousand dollars ($125,000) or more.

8. Assignment.

The Contractor shall not assign or transfer any interest in this Agreement or assign any claims for money due or to become due under this Agreement without the prior written approval of the City.

9. Subcontracting.

The Contractor shall not subcontract any portion of the services to be performed under this Agreement without the prior written approval of the City. No such subcontract shall relieve the primary Contractor from its obligations and liabilities under this Agreement, nor shall any subcontract obligate direct payment from the City.

10. Release.

Final payment of the amounts due under this Agreement shall operate as a release of the City, its officers and employees from all liabilities, claims and obligations whatsoever arising from or under this Agreement.

11. Confidentiality.

Any confidential information provided to or developed by the Contractor in the performance of this Agreement shall be kept confidential and shall not be made available to any individual or organization by the Contractor without the prior written approval of the City.

12. Product of Service – Copyright.

All materials developed or acquired by the Contractor under this Agreement shall becomethe property of the City and shall be delivered to the City no later than the termination date of this Agreement. Nothing developed or produced, in whole or in part, by the Contractor under this Agreement shall be the subject of an application for copyright or other claim of ownership by or on behalf of the Contractor.

13. Conflict of Interest; Governmental Conduct Act.

A. The Contractor represents and warrants that it presently has no interest and, duringthe term of this Agreement, shall not acquire any interest, direct or indirect, which would conflictin any manner or degree with the performance or services required under the Agreement.

B. The Contractor further represents and warrants that it has complied with, and, during the term of this Agreement, will continue to comply with, and that this Agreement complies with all applicable

provisions of the Governmental Conduct Act, Chapter 10, Article 16 NMSA 1978.

C. Contractor's representations and warranties in Paragraphs A and B of this Article 13 are material representations of fact upon which the City relied when this Agreement was enteredinto by the parties. Contractor shall provide immediate written notice to the City if, at any timeduring the term of this Agreement, Contractor learns that Contractor's representations and warranties in Paragraphs A and B of this Article 13 were erroneous on the effective date of this Agreement or have become erroneous by reason of new or changed circumstances. If it is laterdetermined that Contractor's representations and warranties in Paragraphs A and B of this Article 13 were erroneous on the effective date of this Agreement or have become erroneous by reason ofnew or changed circumstances, in addition to other remedies available to the City and notwithstanding anything in the Agreement to the contrary, the City may immediately terminate the Agreement.

D. All terms defined in the Governmental Conduct Act have the same meaning in thissection.

14. Amendment.

A. This Agreement shall not be altered, changed or amended except by instrument in writing executed by the parties hereto and all other required signatories.

B. If the City proposes an amendment to the Agreement to unilaterally reduce funding due to budget or other considerations, the Contractor shall, within thirty (30) days of receipt of the proposed Amendment, have the option to terminate the Agreement, pursuant to the termination provisions as set forth in Article 4 herein, or to agree to the reduced funding.

15. Change Orders.

A. Changes. The Contractor may only make changes or revisions within the Scope of Work as defined by Article 1 and/or Exhibit 1 after receipt of written approval by the City Manager or his/her designee. Such change may only be made to Tasks or Sub-Task as defined in the Scope of Work. Under no circumstance shall such change affect the:

1) Deliverable requirements, as outlined in the Scope of Work;
2) Due date of any Deliverable, as outlined in the Scope of Work;
3) Compensation of any Deliverable, as outlined in the Scope of Work;
4) Agreement compensation, as outlined in Article 2; or
5) Agreement termination, as outlined in Article 4.

B. Change Request Process. In the event that circumstances warrant a change to accomplish the Scope of Work as described above, a Change Request shall be submitted that meets the following criteria:

1) The Project Manager shall draft a written Change Request for review and approval by the City Manager to include:
   (a) the name of the person requesting the change;
   (b) a summary of the required change;
   (c) the start date for the change;
   (d) the reason and necessity for change;
   (e) the elements to be altered; and
   (f) The impact of the change.

2) The City Manager shall provide a written decision on the Change Request to the Contractor within a maximum of ten (10) Business Days of receipt of the Change Request. All decisions made by the City Manager are final. Change Requests, once approved, become a part of the Agreement and become binding as a part of the original Agreement.

16. Merger.

This Agreement incorporates all the Agreements, covenants and understandings between the parties hereto concerning the subject matter hereof, and all such covenants, Agreements and understandings have been merged into this written Agreement. No prior Agreement or understanding, oral or otherwise, of the parties or their agents shall be valid or enforceable unless embodied in this Agreement.

17. Penalties for violation of law.

The Procurement Code, Sections 13-1-28 through 13-1-199, NMSA 1978, imposes civil and criminal penalties for its violation. In addition, the New Mexico criminal statutes imposefelony penalties for illegal bribes, gratuities and kickbacks.

18. Equal Opportunity Compliance.

The Contractor agrees to abide by all federal and state laws and rules and regulations, andSanta Fe City Code, pertaining to equal employment opportunity. In accordance with all such laws of the State of New Mexico, the Contractor assures that no person in the United States shall, on the grounds of race, religion, color, national origin, ancestry, sex, age, physical or mental handicap, or serious medical condition, spousal affiliation, sexual orientation or gender identity, be excluded from employment with or participation in, be denied the benefits of, or be otherwise subjected to discrimination under any program or activity performed under this Agreement. If Contractor is found not to be in compliance with these requirements during the life of this Agreement, Contractor agrees to take appropriate steps to correct these deficiencies.

19. Applicable Law.

The laws of the State of New Mexico shall govern this Agreement, without giving effect to its choice of law provisions. Venue shall be proper only in a New Mexico court of competent jurisdiction in accordance with Section 38-3-1 (G) NMSA 1978. By execution of this Agreement, Contractor acknowledges and agrees to the jurisdiction of the courts of the State of New Mexicoover any and all lawsuits arising under or out of any term of this Agreement.

20. Workers Compensation.

The Contractor agrees to comply with state laws and rules applicable to workers compensation benefits for its employees. If the Contractor fails to comply with the Workers Compensation Act and applicable rules when required to do so, this Agreement may be terminated by the City.

21. Professional Liability Insurance. Contractor shall maintain professional liability insurance throughout the term of this Agreement providing a minimum coverage in the amount required under the New Mexico Tort Claims Act. The Contractor shall furnish the City with proofof insurance of Contractor's compliance with the provisions of this section as a condition prior toperforming services under this Agreement.

22. Other Insurance

If the Services contemplated under this Agreement will be performed on or in City facilitiesor

property, Contractor shall maintain in force during the entire term of this Agreement, the following insurance coverage(s), naming the City as additional insured,

A. **Commercial General Liability** insurance shall be written on an occurrence basis and be a broad as ISO Form CG 00 01 with limits not less than $2,000,000 per occurrence and #2,000,000 in the aggregate for claims against bodily injury, personal and advertising injury, and property damage. Said policy shall include broad from Contractual Liability coverage and be endorsed to name the City of Santa Fe, their officials, officers, employees and agents as additionalinsureds.

B. **Business Automobile Liability** insurance for all owned, non-owned automobiles,with a combined single limit not less than $1,000,000 per accident.

C. **Broader Coverage and Limits.** The insurance requirements under this Agreement shall be the greater of (1) the minimum coverage and limits specified in this Agreement, or (2) the broader coverage and maximum limits of coverage of any insurance policy or proceeds available tothe Named Insured. It is agreed that these insurance requirements shall not in any way act to reduce coverage that is broader or that includes higher limits than the minimums required herein. No representation is made that minimum insurance requirements of this Agreement are sufficient to cover the obligations of Contractor hereunder.

D. Contractor shall maintain the above insurance for the term of this Agreement and name the City as an additional insured and provide for 30 days cancellation notice on any Certificate of Insurance form furnished by Contractor. Such certificate shall also specifically state the coverage provided under the policy is primary over any other valid and collectible insurance and provide a waiver of subrogation.

23. Records and Financial Audit.

The Contractor shall maintain detailed time and expenditure records that indicate the date; time, nature and cost of services rendered during the Agreement's term and effect and retain them for a period of three (3) years from the date of final payment under this Agreement. The records shall be subject to inspection by the City. The City shall have the right to audit billings both before and after payment. Payment under this Agreement shall not foreclose the right of the City to recover excessive or illegal payments.

24. Indemnification.

The Contractor shall defend, indemnify and hold harmless the City from all actions, proceeding, claims, demands, costs, damages, attorney's fees and all other liabilities and expenses of any kind from any source which may arise out of the performance of this Agreement, caused by the negligent act or failure to act of the Contractor, its officers, employees, servants, subcontractors or agents, or if caused by the actions of any client of the Contractor resulting in injury or damageto persons or property during the time when the Contractor or any officer, agent, employee, servantor subcontractor thereof has or is performing services pursuant to this Agreement. In the event that any action, suit or proceeding related to the services performed by the Contractor or any officer, agent, employee, servant or subcontractor under this Agreement is brought against the Contractor,the Contractor shall, as soon as practicable but no later than two (2) days after it receives notice thereof, notify the legal counsel of the City.

25. New Mexico Tort Claims Act

Any liability incurred by the City of Santa Fe in connection with this Agreement is subjectto the immunities and limitations of the New Mexico Tort Claims Act, Section 41-4-1, et. seq.NMSA 1978, as amended. The city and its "public employees" as defined in the New Mexico Tort Claims Act, do not waive sovereign immunity, do not waive any defense and do not waive anylimitation of liability pursuant to law. No provision in this Agreement modifies or waives any provision of the New Mexico

Tort Claims Act.

26. Invalid Term or Condition.

If any term or condition of this Agreement shall be held invalid or unenforceable, the remainder of this Agreement shall not be affected and shall be valid and enforceable.

27. Enforcement of Agreement.

A party's failure to require strict performance of any provision of this Agreement shall notwaive or diminish that party's right thereafter to demand strict compliance with that or any other provision. No waiver by a party of any of its rights under this Agreement shall be effective unlessexpress and in writing, and no effective waiver by a party of any of its rights shall be effective to waive any other rights.

28. Notices.

Any notice required to be given to either party by this Agreement shall be in writing andshall be delivered in person, by courier service or by U.S. mail, either first class or certified, return receipt requested, postage prepaid, as follows:

To the City:
Water Division Director
801 W. San Mateo
Santa Fe, NM 87505

To the Contractor:
A.AC Construction LLC
18 La Luna Road
Santa Fe, NM 87507

29. Authority.

If Contractor is other than a natural person, the individual(s) signing this Agreement on behalf of Contractor represents and warrants that he or she has the power and authority to bindContractor, and that no further action, resolution, or approval from Contractor is necessary to enterinto a binding contract.

IN WITNESS WHEREOF, the Parties have executed this Agreement as of the date of the signatureby the required approval authorities below.

CITY OF SANTA FE:

ALAN WEBBER, MAYOR

DATE: Sep 12, 2021

CONTRACTOR:

Andrew Sisneros (Aug 19, 2021 16:05 MDT)

NAME
Andrew Sisneros, Managing Member

TITLE
DATE: Aug 19, 2021

CRS# 03-157349-00-5
Registration # 222939

ATTEST:

Kristine Mihelcic
Kristine Mihelcic (Sep 15, 2021 12:10 MDT)

KRISTINE BUSTOS MIHELCIC, CITY CLERK
GB MTG 09/08/2021

CITY ATTORNEY'S OFFICE:

Marcos Martinez
Marcos Martinez (Aug 17, 2021 10:24 MDT)

SENIOR ASSISTANT CITY ATTORNEY

APPROVED FOR FINANCES:

Mary McCoy

MARY MCCOY, FINANCE DIRECTOR

5050395.572970
Org. Name/Org#

AJH
AJH

Bid Item	Approx. QTY.	Unit	Article and Description	AAC		Sub Surface	
				Unit Price	Item Price	Unit Price	Item Price
5	35	LF	2" PVC Water Main, cip, all lengths	$ 32.50	$ 1,137.50	$ 30.00	$ 1,050.00
10	35	LF	4" PVC Water Main, cip, <100'	$ 38.00	$ 1,330.00	$ 36.00	$ 1,260.00
15	100	LF	4" PVC Water Main, cip, >100'	$ 36.00	$ 3,600.00	$ 34.00	$ 3,400.00
20	50	LF	6" PVC Water Main, cip, <100'	$ 43.50	$ 2,175.00	$ 42.00	$ 2,100.00
25	150	LF	6" PVC Water Main, cip, >100'	$ 40.50	$ 6,075.00	$ 39.00	$ 5,850.00
30	75	LF	8" PVC Water Main, cip, <100'	$ 49.00	$ 3,675.00	$ 48.00	$ 3,600.00
35	200	LF	8" PVC Water Main, cip, >100'	$ 46.75	$ 9,350.00	$ 45.50	$ 9,100.00
40	35	LF	10" PVC Water Main, cip, <100'	$ 56.00	$ 1,960.00	$ 52.00	$ 1,820.00
45	100	LF	10" PVC Water Main, cip, >100'	$ 52.00	$ 5,200.00	$ 49.00	$ 4,900.00
50	50	LF	12" PVC Water Main, cip, <100'	$ 69.37	$ 3,468.50	$ 66.75	$ 3,337.50
55	150	LF	12" PVC Water Main, cip, >100'	$ 66.25	$ 9,937.50	$ 64.50	$ 9,675.00
60	50	LF	14" PVC Water Main, cip	$ 87.00	$ 4,350.00	$ 79.00	$ 3,950.00
65	50	LF	16" PVC Water Main, cip	$ 103.50	$ 5,175.00	$ 97.00	$ 4,850.00
70	50	LF	24" PVC Water Main, cip	$ 167.50	$ 8,375.00	$ 100.00	$ 5,000.00
75	35	LF	2" DI Water Main, cip, all lengths	$ 42.00	$ 1,470.00	$ -	$ -
80	50	LF	4" DI Water Main, cip, <100'	$ 63.75	$ 3,187.50	$ 57.50	$ 2,875.00
85	100	LF	4" DI Water Main, cip, >100'	$ 56.50	$ 5,650.00	$ 56.00	$ 5,600.00
90	75	LF	6" DI Water Main, cip, <100'	$ 63.50	$ 4,762.50	$ 53.00	$ 3,975.00
95	250	LF	6" DI Water Main, cip, >100'	$ 56.50	$ 14,125.00	$ 51.00	$ 12,750.00
100	75	LF	8" DI Water Main, cip, <100'	$ 68.00	$ 5,100.00	$ 60.25	$ 4,518.75
105	250	LF	8" DI Water Main, cip, >100'	$ 73.00	$ 18,250.00	$ 58.00	$ 14,500.00
110	35	LF	10" DI Water Main, cip, <100'	$ 77.00	$ 2,695.00	$ 65.00	$ 2,275.00
115	100	LF	10" DI Water Main, cip, >100'	$ 74.00	$ 7,400.00	$ 63.00	$ 6,300.00
120	50	LF	12" DI Water Main, cip, <100'	$ 99.00	$ 4,950.00	$ 78.00	$ 3,900.00
125	100	LF	12" DI Water Main, cip, >100'	$ 89.50	$ 8,950.00	$ 74.00	$ 7,400.00
130	50	LF	14" DI Water Main, cip	$ 115.50	$ 5,775.00	$ 87.00	$ 4,350.00
135	50	LF	16" DI Water Main, cip	$ 139.50	$ 6,975.00	$ 101.00	$ 5,050.00
140	50	LF	24" DI Water Main, cip	$ 207.00	$ 10,350.00	$ 159.00	$ 7,950.00
145	75	LF	Extra Pay for Trench Depth, 6'-8'	$ 41.00	$ 3,075.00	$ 8.00	$ 600.00
150	50	LF	Extra Pay for Trench Depth, 8'-10'	$ 98.00	$ 4,900.00	$ 12.00	$ 600.00
155	25	LF	Extra Pay for Trench Depth, 10'-14'	$ 154.00	$ 3,850.00	$ 30.00	$ 750.00
160	20	CY	Rock Excavation	$ 325.00	$ 6,500.00	$ 220.00	$ 4,400.00
165	300	CY	Exploratory Excavation (as SDCW Approved)	$ 50.00	$ 15,000.00	$ 65.00	$ 19,500.00
170	75	CY	Imported Backfill (as SDCW Approved)	$ 36.00	$ 2,700.00	$ 24.00	$ 1,800.00
175	1,000	LB	Fitting Installation	$ 4.50	$ 4,500.00	$ 4.00	$ 4,000.00
180	500	LB	Fitting Insertion	$ 26.00	$ 13,000.00	$ 34.00	$ 17,000.00
185	25	EA	4" Retainer Ring/ Bolt on Flange	$ 60.00	$ 1,500.00	$ 65.00	$ 1,625.00
190	50	EA	6" Retainer Ring/ Bolt on Flange	$ 86.50	$ 4,325.00	$ 105.00	$ 5,250.00
195	50	EA	8" Retainer Ring/ Bolt on Flange	$ 98.50	$ 4,925.00	$ 119.00	$ 5,950.00
200	20	EA	10" Retainer Ring/ Bolt on Flange	$ 123.00	$ 2,460.00	$ 121.00	$ 2,420.00
205	20	EA	12" Retainer Ring/ Bolt on Flange	$ 147.50	$ 2,950.00	$ 145.00	$ 2,900.00
210	20	EA	14" Retainer Ring/ Bolt on Flange	$ 184.50	$ 3,690.00	$ 179.00	$ 3,580.00
215	10	EA	16" Retainer Ring/ Bolt on Flange	$ 275.00	$ 2,750.00	$ 250.00	$ 2,500.00
220	25	EA	4" Joint Harness	$ 70.50	$ 1,762.50	$ 40.00	$ 1,000.00
225	50	EA	6" Joint Harness	$ 95.00	$ 4,750.00	$ 110.00	$ 5,500.00
230	50	EA	8" Joint Harness	$ 125.00	$ 6,250.00	$ 120.00	$ 6,000.00
235	20	EA	10" Joint Harness	$ 160.00	$ 3,200.00	$ 160.00	$ 3,200.00
240	20	EA	12" Joint Harness	$ 192.50	$ 3,850.00	$ 180.00	$ 3,600.00
245	20	EA	14" Joint Harness	$ 370.00	$ 7,400.00	$ 375.00	$ 7,500.00
250	10	EA	16" Joint Harness	$ 427.50	$ 4,275.00	$ 410.00	$ 4,100.00
255	10	CY	Concrete Thrust Blocking (as SDCW Approved)	$ 315.00	$ 3,150.00	$ 250.00	$ 2,500.00
260	2	EA	Tapping Sleeve w/ Tap, 4" X 4"	$ 1,350.00	$ 2,700.00	$ 1,350.00	$ 2,700.00
265	4	EA	Tapping Sleeve w/ Tap, 6" X 4" - 6"	$ 1,567.50	$ 6,270.00	$ 1,500.00	$ 6,000.00
270	4	EA	Tapping Sleeve w/ Tap, 8" X 4" - 8"	$ 1,900.00	$ 7,600.00	$ 1,800.00	$ 7,200.00

Bid Item	Approx. QTY.	Unit	Article and Description	AAC		Sub Surface	
				Unit Price	Item Price	Unit Price	Item Price
275	2	EA	Tapping Sleeve w/ Tap, 10" X 4" - 10"	$ 2,250.00	$ 4,500.00	$ 2,100.00	$ 4,200.00
280	4	EA	Tapping Sleeve w/ Tap, 12" X 4" - 12"	$ 2,650.00	$ 10,600.00	$ 2,300.00	$ 9,200.00
285	1	EA	Tapping Sleeve w/Tap, 20" X 4" - 20"	$ 4,747.50	$ 4,747.50	$ 4,200.00	$ 4,200.00
290	1	EA	Non-Pressurized Connections, 2" line	$ 1,650.00	$ 1,650.00	$ 1,500.00	$ 1,500.00
295	1	EA	Non-Pressurized Connections, 4"-10" line	$ 3,587.50	$ 3,587.50	$ 3,100.00	$ 3,100.00
300	1	EA	Non-Pressurized Connections, 12"-20" line	$ 6,050.00	$ 6,050.00	$ 4,100.00	$ 4,100.00
305	2	EA	2" CL125 Gate Valves, cip.	$ 807.50	$ 1,615.00	$ 850.00	$ 1,700.00
310	2	EA	4" CL125 Gate Valves, cip.	$ 925.00	$ 1,850.00	$ 1,200.00	$ 2,400.00
315	5	EA	6" CL125 Gate Valves, cip.	$ 1,200.00	$ 6,000.00	$ 1,525.00	$ 7,625.00
320	5	EA	8" CL125 Gate Valves, cip.	$ 1,650.00	$ 8,250.00	$ 1,725.00	$ 8,625.00
325	1	EA	10" CL125 Gate Valves, cip.	$ 2,315.00	$ 2,315.00	$ 2,325.00	$ 2,325.00
330	2	EA	12" CL125 Gate Valves, cip.	$ 2,900.00	$ 5,800.00	$ 2,800.00	$ 5,600.00
335	1	EA	2" CL250 Gate Valves, cip.	$ 792.50	$ 792.50	$ 700.00	$ 700.00
340	1	EA	4" CL250 Gate Valves, cip.	$ 1,837.50	$ 1,837.50	$ 1,800.00	$ 1,800.00
345	10	EA	6" CL250 Gate Valves, cip.	$ 1,950.00	$ 19,500.00	$ 1,825.00	$ 18,250.00
350	3	EA	8" CL250 Gate Valves, cip.	$ 2,475.00	$ 7,425.00	$ 2,000.00	$ 6,000.00
355	1	EA	10" CL250 Gate Valves, cip.	$ 4,000.00	$ 4,000.00	$ 3,700.00	$ 3,700.00
360	1	EA	12" CL250 Gate Valves, cip.	$ 4,552.50	$ 4,552.50	$ 4,200.00	$ 4,200.00
365	1	EA	16" CL250 Gate Valves, cip.	$ 7,025.00	$ 7,025.00	$ 6,500.00	$ 6,500.00
370	1	EA	20" CL250 Gate Valves, cip.	$ 16,755.00	$ 16,755.00	$ 16,190.00	$ 16,190.00
375	1	EA	24" CL250 Gate Valves, cip.	$ 23,750.00	$ 23,750.00	$ 23,250.00	$ 23,250.00
380	1	EA	12" CL250 Butterfly Valves, cip.	$ 2,800.00	$ 2,800.00	$ 2,800.00	$ 2,800.00
385	1	EA	16" CL250 Butterfly Valves, cip.	$ 4,975.00	$ 4,975.00	$ 4,850.00	$ 4,850.00
390	1	EA	20" CL250 Butterfly Valves, cip.	$ 7,680.00	$ 7,680.00	$ 6,600.00	$ 6,600.00
395	1	EA	24" CL250 Butterfly Valves, cip.	$ 10,042.50	$ 10,042.50	$ 9,125.00	$ 9,125.00
400	5	EA	Fire Hydrant, 5' or less bury, cip.	$ 2,987.50	$ 14,937.50	$ 3,200.00	$ 16,000.00
405	2	EA	Fire Hydrant Extension, 6" or 12" length	$ 767.50	$ 1,535.00	$ 700.00	$ 1,400.00
410	1	EA	Fire Hydrant Extension, 18" or 24" length	$ 1,017.50	$ 1,017.50	$ 920.00	$ 920.00
415	1	EA	Fire Hydrant Remove & Relay	$ 1,350.00	$ 1,350.00	$ 700.00	$ 700.00
420	1	EA	Fire Hydrant Remove & Return	$ 887.50	$ 887.50	$ 575.00	$ 575.00
425	1	EA	2 1/4" Flush Hydrant	$ 1,657.50	$ 1,657.50	$ 1,500.00	$ 1,500.00
430	1	EA	2" Blow-Off Valve Installation	$ 1,420.00	$ 1,420.00	$ 1,300.00	$ 1,300.00
435	1	EA	2" Pressure Relief Valve, cip.	$ 6,780.00	$ 6,780.00	$ 6,725.00	$ 6,725.00
440	1	EA	3" Pressure Relief Valve, cip.	$ 7,065.50	$ 7,065.50	$ 6,950.00	$ 6,950.00
445	1	EA	4" Pressure Relief Valve, cip.	$ 8,432.50	$ 8,432.50	$ 8,195.00	$ 8,195.00
450	1	EA	6" Pressure Relief Valve, cip.	$ 11,091.50	$ 11,091.50	$ 10,800.00	$ 10,800.00
455	1	EA	8" Pressure Relief Valve, cip.	$ 15,362.50	$ 15,362.50	$ 14,925.00	$ 14,925.00
460	1	EA	12" Pressure Relief Valve, cip.	$ 29,837.50	$ 29,837.50	$ 29,500.00	$ 29,500.00
465	1	EA	Air & Vacuum Release Valve, 1"	$ 2,970.00	$ 2,970.00	$ 2,750.00	$ 2,750.00
470	1	EA	Air & Vacuum Release Valve, 2"	$ 4,245.00	$ 4,245.00	$ 3,940.00	$ 3,940.00
475	1	EA	Install City of Santa Fe Furnished Valve/Meter, 2" - 4"	$ 825.00	$ 825.00	$ 450.00	$ 450.00
480	1	EA	Install City of Santa Fe Furnished Valve/Meter, 6" - 8"	$ 1,025.00	$ 1,025.00	$ 550.00	$ 550.00
485	1	EA	Install City of Santa Fe Furnished Valve/Meter, 10"-12"	$ 1,275.00	$ 1,275.00	$ 750.00	$ 750.00
490	1	EA	Metered 2" Bypass – Vault Installation	$ 4,000.00	$ 4,000.00	$ 3,185.00	$ 3,185.00
495	20	EA	Valve Box, cip.	$ 575.00	$ 11,500.00	$ 625.00	$ 12,500.00
500	5	EA	Valve Box Replacement	$ 750.00	$ 3,750.00	$ 775.00	$ 3,875.00
505	5	EA	Valve Box Removal of Existing	$ 425.00	$ 2,125.00	$ 325.00	$ 1,625.00
510	3	EA	Valve Box Adjustment	$ 600.00	$ 1,800.00	$ 550.00	$ 1,650.00
515	1	EA	Valve Stem Extension, 0'-4' Depth	$ 200.00	$ 200.00	$ 250.00	$ 250.00
520	4	VF	Precast 4' Diameter Pit w/ Lid Min. 4' Depth	$ 925.00	$ 3,700.00	$ 825.00	$ 3,300.00
525	8	VF	Precast 6' Diameter Pit w/ Lid Min. 4' Depth	$ 1,000.00	$ 8,000.00	$ 1,050.00	$ 8,400.00
530	8	VF	Precast 8' Diameter Pit w/ Lid Min. 4' Depth	$ 1,500.00	$ 12,000.00	$ 1,075.00	$ 8,600.00
535	7	CY	Cast-In-Place RCP Vault w/ Lid	$ 1,000.00	$ 7,000.00	$ 1,025.00	$ 7,175.00
540	1	EA	Prefabricated Vault, 4' X 8'	$ 8,900.00	$ 8,900.00	$ 8,995.00	$ 8,995.00

				AAC		Sub Surface	
Bid Item	Approx. QTY.	Unit	Article and Description	Unit Price	Item Price	Unit Price	Item Price
545	1	ACRE	Native Seeding	$ 2,600.00	$ 2,600.00	$ 2,275.00	$ 2,275.00
550	1	EA	Bollards (pair)	$ 1,180.00	$ 1,180.00	$ 975.00	$ 975.00
555	18	LF	4" Steel Casing	$ 31.37	$ 564.66	$ 95.00	$ 1,710.00
560	18	LF	4" PVC Casing	$ 15.40	$ 277.20	$ 75.00	$ 1,350.00
565	18	LF	14" Steel Casing	$ 107.43	$ 1,933.74	$ 175.00	$ 3,150.00
570	18	LF	16" Steel Casing	$ 124.02	$ 2,232.36	$ 200.00	$ 3,600.00
575	18	LF	18" Steel Casing	$ 144.03	$ 2,592.54	$ 275.00	$ 4,950.00
580	18	LF	22" Steel Casing	$ 234.94	$ 4,228.92	$ 300.00	$ 5,400.00
585	18	LF	26" Steel Casing	$ 290.67	$ 5,232.06	$ 400.00	$ 7,200.00
590	18	LF	28" Steel Casing	$ 187.04	$ 3,366.72	$ 450.00	$ 8,100.00
595	18	LF	30" Steel Casing	$ 187.04	$ 3,366.72	$ 450.00	$ 8,100.00
600	18	LF	36" Steel Casing	$ 287.03	$ 5,166.54	$ 500.00	$ 9,000.00
605	50	DIA-IN-LF	Bore & Jack Casing Pipe	$ 575.00	$ 28,750.00	$ 40.00	$ 2,000.00
610	18	LF	Open Cut Casing Pipe Installation, < 6' Deep	$ 62.00	$ 1,116.00	$ 39.00	$ 702.00
615	25	SY	Asphalt Pavement Removal & Disposal, <2"	$ 29.50	$ 737.50	$ 65.00	$ 1,625.00
620	200	SY	Asphalt Pavement Removal & Disposal, 2"-6"	$ 17.70	$ 3,540.00	$ 65.00	$ 13,000.00
625	10	SY	Concrete Pavement Removal & Disposal, <2"	$ 97.50	$ 975.00	$ 90.00	$ 900.00
630	10	SY	Concrete Pavement Removal & Disposal, 2"-6"	$ 132.50	$ 1,325.00	$ 95.00	$ 950.00
635	50	LF	Concrete Curb and Gutter Removal & Disposal	$ 12.00	$ 600.00	$ 25.00	$ 1,250.00
640	10	SY	Concrete Sidewalk Removal & Disposal	$ 65.00	$ 650.00	$ 30.00	$ 300.00
645	50	SY	Replace City Street Pavement w/o Laydown Machine, Virgin Asphalt	$ 74.50	$ 3,725.00	$ 75.00	$ 3,750.00
650	50	SY	Replace City Street Pavement w/o Laydown Machine, Recycled Asphalt	$ 74.50	$ 3,725.00	$ 75.00	$ 3,750.00
655	50	SY	Replace City Street Pavement with Laydown Machine, Virgin Asphalt	$ 72.00	$ 3,600.00	$ 75.00	$ 3,750.00
660	10	SY	Replace City Street Pavement with Laydown Machine, Recycled Asphalt	$ 84.96	$ 849.60	$ 75.00	$ 750.00
665	10	SY	Replace City Street Pavement with Temporary Cold Mix	$ 167.56	$ 1,675.60	$ 75.00	$ 750.00
670	100	SY	Replace Non-City Street Pavement w/o Laydown Machine, Virgin Asphalt	$ 74.50	$ 7,450.00	$ 75.00	$ 7,500.00
675	10	SY	Replace Non-City Street Pavement w/o Laydown Machine, Recycled Asphalt	$ 74.50	$ 745.00	$ 75.00	$ 750.00
680	10	SY	Replace Non-City Street Pavement with Laydown Machine, Virgin Asphalt	$ 92.00	$ 920.00	$ 75.00	$ 750.00
685	10	SY	Replace Non-City Street Pavement with Laydown Machine, Recycled Asphalt	$ 92.00	$ 920.00	$ 75.00	$ 750.00
690	1	SY	Replace Non-City Street Pavement with Temporary Cold Mix	$ 167.56	$ 167.56	$ 75.00	$ 75.00
695	10	SY	Replace Concrete Pavement	$ 261.50	$ 2,615.00	$ 275.00	$ 2,750.00
700	50	LF	Replace Concrete Curb & Gutter	$ 45.00	$ 2,250.00	$ 45.00	$ 2,250.00
705	10	SY	Replace Concrete Sidewalk	$ 155.00	$ 1,550.00	$ 170.00	$ 1,700.00
710	10	CY	Replace Gravel Surface, 0"-2"	$ 56.00	$ 560.00	$ 85.00	$ 850.00
715	10	CY	Replace Gravel Surface, 2"-4"	$ 66.00	$ 660.00	$ 120.00	$ 1,200.00
720	150	SY	Base course/Gravel (crushed or landscape), 0"-3"	$ 34.00	$ 5,100.00	$ 35.00	$ 5,250.00
725	50	SY	Base course/Gravel (crushed or landscape), 3"-6"	$ 45.00	$ 2,250.00	$ 45.00	$ 2,250.00
730	4	EA	Service, 3/4" Single, New Main	$ 1,262.50	$ 5,050.00	$ 1,475.00	$ 5,900.00
735	2	EA	Service, 3/4" Double, New Main	$ 1,662.50	$ 3,325.00	$ 1,775.00	$ 3,550.00
740	2	EA	Service, 1", New Main	$ 1,887.50	$ 3,775.00	$ 1,825.00	$ 3,650.00
745	1	EA	Service, 1 1/2", New Main	$ 3,670.00	$ 3,670.00	$ 3,450.00	$ 3,450.00
750	1	EA	Service, 2", New Main	$ 3,985.00	$ 3,985.00	$ 3,870.00	$ 3,870.00
755	5	EA	Service, 3/4" Single, Existing Main	$ 1,450.00	$ 7,250.00	$ 1,475.00	$ 7,375.00
760	2	EA	Service, 3/4" Double, Existing Main	$ 1,912.50	$ 3,825.00	$ 1,775.00	$ 3,550.00
765	1	EA	Service, 1", Existing Main	$ 1,900.00	$ 1,900.00	$ 1,825.00	$ 1,825.00
770	1	EA	Service, 1 1/2", Existing Main	$ 3,670.00	$ 3,670.00	$ 3,450.00	$ 3,450.00
775	1	EA	Service, 2", Existing Main	$ 4,300.00	$ 4,300.00	$ 3,870.00	$ 3,870.00
780	5	EA	Service Replacement, 3/4"	$ 1,602.50	$ 8,012.50	$ 1,475.00	$ 7,375.00
785	2	EA	Service Replacement, Double, 3/4"	$ 1,950.00	$ 3,900.00	$ 1,775.00	$ 3,550.00
790	1	EA	Service Replacement, 1"	$ 2,100.00	$ 2,100.00	$ 1,825.00	$ 1,825.00

				AAC		Sub Surface	
Bid Item	Approx. QTY.	Unit	Article and Description	Unit Price	Item Price	Unit Price	Item Price
795	1	EA	Service Replacement, 1 1/2"	$ 3,875.00	$ 3,875.00	$ 3,450.00	$ 3,450.00
800	1	EA	Service Replacement, 2"	$ 4,512.00	$ 4,512.00	$ 3,870.00	$ 3,870.00
805	3	EA	Meter Box Relocation/Replacement, 3/4"	$ 1,000.00	$ 3,000.00	$ 895.00	$ 2,685.00
810	1	EA	Meter Box Relocation/Replacement, 1"	$ 1,150.00	$ 1,150.00	$ 915.00	$ 915.00
815	1	EA	Meter Box Relocation/Replacement, 1-1/2"	$ 1,800.00	$ 1,800.00	$ 1,400.00	$ 1,400.00
820	1	EA	Meter Box Relocation/Replacement, 2"	$ 1,900.00	$ 1,900.00	$ 1,400.00	$ 1,400.00
825	5	EA	Service Transfer, 3/4"	$ 812.50	$ 4,062.50	$ 725.00	$ 3,625.00
830	2	EA	Service Transfer, 1"	$ 912.50	$ 1,825.00	$ 825.00	$ 1,650.00
835	1	EA	Service Transfer, 1 1/2"	$ 1,112.50	$ 1,112.50	$ 925.00	$ 925.00
840	1	EA	Service Transfer at Main, 2"	$ 1,325.00	$ 1,325.00	$ 975.00	$ 975.00
845	1	EA	Retire Existing Service at Main, 3/4"- 2"	$ 962.50	$ 962.50	$ 725.00	$ 725.00
850	1	EA	Retire Existing Meter Box & Setting	$ 437.50	$ 437.50	$ 525.00	$ 525.00
855	1	EA	Adjust Meter Box To Grade	$ 412.50	$ 412.50	$ 425.00	$ 425.00
860	11	EA	Service Saddle, 3/4" Tap, 4"-12" Main	$ 500.00	$ 5,500.00	$ 650.00	$ 7,150.00
865	4	EA	Service Saddle, 1" Tap, 4"-12" Main	$ 462.50	$ 1,850.00	$ 675.00	$ 2,700.00
870	3	EA	Service Saddle, 1 1/2" Tap, 4"-12" Main	$ 562.50	$ 1,687.50	$ 750.00	$ 2,250.00
875	3	EA	Service Saddle, 2" Tap, 4"-12" Main	$ 650.00	$ 1,950.00	$ 775.00	$ 2,325.00
880	100	LF	Service Tubing, 3/4"	$ 28.75	$ 2,875.00	$ 31.50	$ 3,150.00
885	100	LF	Service Tubing, 1"	$ 34.12	$ 3,412.00	$ 33.75	$ 3,375.00
890	100	LF	Service Tubing, 1 1/2"	$ 46.50	$ 4,650.00	$ 44.00	$ 4,400.00
895	25	LF	Service Tubing, 2"	$ 65.50	$ 1,637.50	$ 53.00	$ 1,325.00
900	1	EA	Air and Vacuum Valve (individual)	$ 450.00	$ 450.00	$ 1,550.00	$ 1,550.00
905	1	GROUP OF 10	Air and Vacuum Valves	$ 8,045.00	$ 8,045.00	$ 15,500.00	$ 15,500.00
910	1	EA	Automatic Flushing Valve	$ 5,867.50	$ 5,867.50	$ 4,350.00	$ 4,350.00
915	$20,000	%	Materials Mark-Up Over Invoice	$ 3,600.00	$ 3,600.00	$ 1,500.00	$ 1,500.00
920	$8,000	%	Traffic Control Mark-Up Over Invoice	$ 1,440.00	$ 1,440.00	$ 1,200.00	$ 1,200.00
925	1	Allow.	Street-Cut Permits	$ 175.00	$ 175.00	$ 375.00	$ 375.00
930	1	EA	Project Signs	$ 675.00	$ 675.00	$ 450.00	$ 450.00
935	10	HR	Archeological Required Delay (after 2 hrs)	$ 250.00	$ 2,500.00	$ 185.00	$ 1,850.00
940	1	LS	Archeological Required Mob/Demob	$ 725.00	$ 725.00	$ 700.00	$ 700.00
EMERGENCY REPAIR					$ -		$ -
9000	175	HR	Supervisor's Truck With tools	$ 35.00	$ 6,125.00	$ 30.00	$ 5,250.00
9100	80	HR	Backhoe/Skid Steer	$ 57.00	$ 4,560.00	$ 58.00	$ 4,640.00
9200	8	HR	Compressor with tools	$ 54.00	$ 432.00	$ 35.00	$ 280.00
9300	16	HR	Dump Truck	$ 65.00	$ 1,040.00	$ 60.00	$ 960.00
9400	4	HR	Pump	$ 25.00	$ 100.00	$ 15.00	$ 60.00
9500	300	HR	Laborer	$ 42.50	$ 12,750.00	$ 43.00	$ 12,900.00
9600	200	HR	Pipe Fitter	$ 44.50	$ 8,900.00	$ 45.00	$ 9,000.00
9700	200	HR	Equipment Operator	$ 57.50	$ 11,500.00	$ 58.00	$ 11,600.00
9800	175	HR	Foreman	$ 59.50	$ 10,412.50	$ 60.00	$ 10,500.00
9900	$5,000	%	Rental Items Mark-Up Over Invoice (multiply $5,000 x your % for Item Price)	$ 1,000.00	$ 1,000.00	$ 900.00	$ 900.00
9950	$20,000	%	Materials Mark-Up Over Invoice (multiply $20,000 x your % for Item Price)	$ 3,600.00	$ 3,600.00	$ 1,500.00	$ 1,500.00

City of Santa Fe

Real Estate Summary of Contracts, Agreements, Amendments & Leases

Section to be completed by department

1. Munis Contract # 3202927

Contractor: A.A.C Construction

Description: CIP# 3058 Priority Line Repl acement

Contract ☐ Agreement ☉ Lease / Rent ☐ Amendment ☐

Term Start Date: as approved Term End Date: 6/30/25

☑ Approved by Council Date: Pending

Contract / Lease: Contract $1,250,000

Amendment # _____ to the Original Contract / Lease # _____

Increase/(Decrease) Amount $ _____

Extend Termination Date to: _____

☐ Approved by Council Date: _____

Amendment is for:

2. **HISTORY** of Contract, Amendments & Lease / Rent - Please Elaborate (option: attach spreadsheet if multiple amendments)

3. Procurement History: 21/43/B

Aug 23, 2021

Purchasing Officer Review: Date:

Comment & Exceptions: Issuance of award from ITB 21/73/B issued. 1st. year.

4. Funding Source: Water Enterprise Fund CIP Org / Object: 5050395.572970

Andy Hopkins

Aug 23, 2021

Budget Officer Approval: Date:

Comment & Exceptions: _____

Staff Contact who completed this form: Maya Martinez Phone # 4271

Email: mfmartinez@santafenm.gov

To be recorded by City Clerk:

Clerk # _____

Date of Execution: _____

CERTIFICATE OF LIABILITY INSURANCE

DATE (MM/DD/YYYY): 06/14/2021

THIS CERTIFICATE IS ISSUED AS A MATTER OF INFORMATION ONLY AND CONFERS NO RIGHTS UPON THE CERTIFICATE HOLDER. THIS CERTIFICATE DOES NOT AFFIRMATIVELY OR NEGATIVELY AMEND, EXTEND OR ALTER THE COVERAGE AFFORDED BY THE POLICIES BELOW. THIS CERTIFICATE OF INSURANCE DOES NOT CONSTITUTE A CONTRACT BETWEEN THE ISSUING INSURER(S), AUTHORIZED REPRESENTATIVE OR PRODUCER, AND THE CERTIFICATE HOLDER.

IMPORTANT: If the certificate holder is an ADDITIONAL INSURED, the policy(ies) must have ADDITIONAL INSURED provisions or be endorsed. If SUBROGATION IS WAIVED, subject to the terms and conditions of the policy, certain policies may require an endorsement. A statement on this certificate does not confer rights to the certificate holder in lieu of such endorsement(s).

PRODUCER	CONTACT NAME: Susan Vance	
Downey & Company 6565 AMERICAS PARKWAY NE SUITE 750 ALBUQUERQUE NM 87110	PHONE (A/C, No, Ext): (505) 881-0300	FAX (A/C, No): (505) 881-0908
	E-MAIL ADDRESS: svance@downeyandco.com	
	INSURER(S) AFFORDING COVERAGE	NAIC #
	INSURER A: Donegal Insurance Group	
INSURED A.A.C. Construction, LLC 18 La Luna Rd Santa Fe NM 87507	INSURER B: New Mexico Mutual Casualty Company	
	INSURER C:	
	INSURER D:	
	INSURER E:	
	INSURER F:	

COVERAGES **CERTIFICATE NUMBER:** 2021-2022 **REVISION NUMBER:**

THIS IS TO CERTIFY THAT THE POLICIES OF INSURANCE LISTED BELOW HAVE BEEN ISSUED TO THE INSURED NAMED ABOVE FOR THE POLICY PERIOD INDICATED. NOTWITHSTANDING ANY REQUIREMENT, TERM OR CONDITION OF ANY CONTRACT OR OTHER DOCUMENT WITH RESPECT TO WHICH THIS CERTIFICATE MAY BE ISSUED OR MAY PERTAIN, THE INSURANCE AFFORDED BY THE POLICIES DESCRIBED HEREIN IS SUBJECT TO ALL THE TERMS, EXCLUSIONS AND CONDITIONS OF SUCH POLICIES. LIMITS SHOWN MAY HAVE BEEN REDUCED BY PAID CLAIMS.

INSR LTR	TYPE OF INSURANCE	ADDL INSD	SUBR WVD	POLICY NUMBER	POLICY EFF (MM/DD/YYYY)	POLICY EXP (MM/DD/YYYY)	LIMITS	
A	[X] COMMERCIAL GENERAL LIABILITY [ ] CLAIMS-MADE [X] OCCUR GEN'L AGGREGATE LIMIT APPLIES PER: [ ] POLICY [X] PRO-JECT [ ] LOC [ ] OTHER:			CPT9030765	01/01/2021	01/01/2022	EACH OCCURRENCE DAMAGE TO RENTED PREMISES (Ea occurrence) MED EXP (Any one person) PERSONAL & ADV INJURY GENERAL AGGREGATE PRODUCTS - COMP/OP AGG [ ]	$ 1,000,000 $ 100,000 $ 5,000 $ 1,000,000 $ 2,000,000 $ 2,000,000 $
A	AUTOMOBILE LIABILITY [X] ANY AUTO [ ] OWNED AUTOS ONLY [ ] SCHEDULED AUTOS [X] HIRED AUTOS ONLY [X] NON-OWNED AUTOS ONLY [ ]			CA9030765	01/01/2021	01/01/2022	COMBINED SINGLE LIMIT (Ea accident) BODILY INJURY (Per person) BODILY INJURY (Per accident) PROPERTY DAMAGE (Per accident) [ ]	$ 1,000,000 $ $ $ $
A	[X] UMBRELLA LIAB [X] OCCUR EXCESS LIAB [ ] CLAIMS-MADE [ ] DED [X] RETENTION $ 0			CXL9030765	01/01/2021	01/01/2022	EACH OCCURRENCE AGGREGATE [ ]	$ 3,000,000 $ 3,000,000 $
B	WORKERS COMPENSATION AND EMPLOYERS' LIABILITY ANY PROPRIETOR/PARTNER/EXECUTIVE OFFICER/MEMBER EXCLUDED? (Mandatory in NH) Y/N [Y] If yes, describe under DESCRIPTION OF OPERATIONS below	N/A		93890.105	01/01/2021	01/01/2022	[X] PER STATUTE [ ] OTH-ER E.L. EACH ACCIDENT E.L. DISEASE - EA EMPLOYEE E.L. DISEASE - POLICY LIMIT	 $ 500,000 $ 500,000 $ 500,000

DESCRIPTION OF OPERATIONS / LOCATIONS / VEHICLES (ACORD 101, Additional Remarks Schedule, may be attached if more space is required)

CERTIFICATE HOLDER

CITY OF SANTA FE WATER DIVISION
801 W. SAN MATEO ROAD
SANTA FE NM 87505

CANCELLATION

SHOULD ANY OF THE ABOVE DESCRIBED POLICIES BE CANCELLED BEFORE THE EXPIRATION DATE THEREOF, NOTICE WILL BE DELIVERED IN ACCORDANCE WITH THE POLICY PROVISIONS.

AUTHORIZED REPRESENTATIVE

Susan J. Vance

© 1988-2015 ACORD CORPORATION. All rights reserved.

The ACORD name and logo are registered marks of ACORD

of the Contractor are in addition to his obligations under Paragraph 4.18.

10.2.6 The Contractor shall designate a responsible member of his organization at the site whose duty shall be the prevention of accidents. This person shall be the Contractor's Superintendent unless otherwise designated by the Contractor in writing to the City of Santa Fe and the City of Santa Fe's Representative.

10.2.7 The Contractor shall not load or permit any part of the work to be loaded so as to endanger its safety.

10.3 EMERGENCIES

10.3.1 In any emergency affecting the safety of persons or property, the Contractor shall act, at his reasonable discretion, to prevent threatened damage, injury or loss. Any additional compensation or extension of time claimed by the Contractor on account of emergency work shall be determined as provided in Article 12 for changes in the work.

ARTICLE 11

INSURANCE

11.1 CONTRACTOR'S LIABILITY INSURANCE

11.1.1. The Contractor shall carry insurance to protect the City of Santa Fe from and against all claims, demands, actions, judgments, costs, expenses and liabilities which may arise or result directly or indirectly from or by reasons of loss, injury or damage related to the Project. The Contractor shall file with the City of Santa Fe current certificates evidencing public liability insurance with limits as provided in the New Mexico Tort Claims Act, Section 41-4-19 NMSA 1978, and as that section or successors section may be amended from time to time. The contractor shall also carry such insurance as it deems necessary to protect it from all claims under any workmen's compensation law in effect that may be applicable to the Contractor. All insurance required by this Agreement shall be kept and remain in full force and effect for the entire life of this Agreement.

11.1.2. The insurance coverage shall include worker's compensation, employer's liability, comprehensive general liability (Premises-Operations, independent contractors, products and completed operations, broad form property damage, contractual liability, explosion and collapse hazard, underground Hazard, personal injury) comprehensive automobile liability (owned and hired), excess liability (umbrella form), and all-risk builder's risk.

11.1.3. All insurance coverage must be maintained for the entire life of the Project. Products and completed operations coverage shall be maintained for a minimum period of one (1) year after final payment.

11.1.4. A valid certificate of insurance must be submitted to the City of Santa Fe prior to issuance of a Notice-to-Proceed.

Type of Required Coverage	Minimum Limits of Liability
Workman's compensation (including accident and occupational disease coverage)	Statutory
Employer's Liability	$100,000
Comprehensive General Liability (including endorsements providing broad form property damage coverage, personal injury coverage, and contractual assumption of liability coverage for all liability the Contractor has assumed under his Contract).	Bodily injury liability: $500,000 each occurrence; $1,000,000 aggregate. Property damage liability: $500,000 each occurrence; $1,000,000 aggregate.
Auto Liability (including non-owned auto coverage)	Bodily injury liability: $500,000 each person; $1,000,000 each occurrence. Property damage liability: $1,000,000 each occurrence

11.1.5 Certificates of Insurance acceptable to the City of Santa Fe shall be filed with the City of Santa Fe prior to

commencement of the work. These Certificates shall contain a provision that coverage afforded under the policies will not be canceled until at least thirty days' prior written notice has been given to the City of Santa Fe. The Contractor shall furnish one (1) copy of each of the Certificates of insurance herein required for each copy of the Contract.

11.2 CITY OF SANTA FE'S LIABILITY INSURANCE

11.2.1 The City of Santa Fe shall be responsible for purchasing and maintaining his own liability insurance and, at his option, may purchase and maintain such insurance as will protect him against all claims which may arise from operations under the Contract.

11.3 PROPERTY INSURANCE

11.3.1 The Contractor shall maintain traditional course of construction insurance upon the work at the site for at least the actual cash value thereof. The traditional course of construction insurance shall cover the interests of the City of Santa Fe, the Contractor, Subcontractors, and Sub-subcontractors in the work. The insurance shall insure against at least the following perils: fire extended coverage, vandalism, malicious mischief, and flood insurance with a deductible of no more than $25,000. The Contractor shall bear the cost of such insurance and include its cost in the Bid.

11.3.2 Any loss insured under Subparagraph 11.3.1 is to be adjusted with the City of Santa Fe and made payable to the City of Santa Fe as trustee for the insured, as their interests may appear subject to the requirements of any applicable mortgage clause. The City of Santa Fe shall deposit the proceeds in a separate account and shall distribute them in accordance with such agreement as the parties in interest, including the City of Santa Fe, may reach. The Contractor shall pay each Subcontractor a just share of any insurance proceeds which the Contractor receives and shall require by written agreement signed by the Subcontractor that the Subcontractor will make payments to his Sub-subcontractors in a similar manner. If after such loss no other special agreement is made, replacement of damaged work shall be covered by an appropriate order.

11.3.3 To the extent permitted under their respective property insurance policies, the City of Santa Fe and the Contractor hereby waive all rights, each against the other, for damages caused by fire or other perils to the extent covered by Insurance obtained pursuant to this Article 11 or any other property insurance applicable to the work, except such rights as they may have to the proceeds of such Insurance held by the City of Santa Fe as trustee. The City of Santa Fe or the Contractor, as appropriate, shall require the City of Santa Fe's Representative, other Contractors, Subcontractors, and Sub-subcontractors to similarly waive rights of subrogation or property insurers.

11.3.4 If the City of Santa Fe finds it necessary to occupy use of any portion of the work prior to Substantial Completion, such occupancy or use shall not commence prior to the time mutually agreed to by the City of Santa Fe and the Contractor and, if required by the applicable insurance or self-insurance coverage not prior to the time the builder's risk property insurer has consented to such occupancy or use. The Contractor's consent to such occupancy or use shall not be unreasonably withheld.

11.4 LOSS OF USE INSURANCE

11.4.1 The City of Santa Fe, at his option, may purchase and maintain such insurance as will insure him against loss of use of his property due to fire or other hazards, however caused.

City of Santa Fe

Treasury Department
200 Lincoln Ave.
Santa Fe, New Mexico 87504-0909
505-955-6551

BUSINESS REGISTRATION

Business Name: A.A.C. CONSTRUCTION LLC
DBA: A.A.C. CONSTRUCTION LLC

Business Location: 18 LA LUNA RD
SANTA FE, NM 87507

CRS Number: 03157349-00-5

Owner: Andrew Sisneros

License Number: 222939

License Type: Business License - Renewable

Issued Date: June 07, 2021

Classification: Out of Jurisdiction Contractor - General

Expiration Date: June 07, 2022

Fees Paid: $10.00

A.A.C. CONSTRUCTION LLC
18 LA LUNA RD LA LUNA
SANTA FE , NM 87507

THIS IS NOT A CONSTRUCTION PERMIT OR SIGN PERMIT. APPROPRIATE PERMITS MUST BE OBTAINED FROM THE CITY OF SANTA FE BUILDING PERMIT DIVISION PRIOR TO COMMENCEMENT OF ANY CONSTRUCTION OR THE INSTALLATION OF ANY EXTERIOR SIGN.

THIS REGISTRATION/LICENSE IS NOT TRANSFERRABLE TO OTHER BUSINESSES OR PREMISES.

TO BE POSTED IN A CONSPICUOUS PLACE

Ver 16 2/7/2020

CITY OF SANTA FE PROCUREMENT CHECKLIST

Contractor Name: A.A.C Contractors

Procurement Title: 21/43/B Priority Line Replacement Price Agreement, CIP # 3058

Procurement Method: State Price Agreement ☐ *Cooperative* ☐ *Sole Source* ☐ *Other* ☐ _____

Exempt ☐ *Request For Proposal (RFP)* ☒ *Invitation To Bid (ITB)* ☐ *Contract under 60K* ☐ *Contract over 60K* ☐

Department Requesting Bill Huey Water Division, PUD

Procurement Requirements:
A procurement file shall be maintained for all contracts, regardless of the method of procurement. The procurement file shall contain the basis on which the award is made, all submitted bids, all evaluation materials, score sheets, quotations and all other documentation related to or prepared in conjunction with evaluation, negotiation, and the award process. The procurement shall contain a written determination from the Requesting Department, signed by the purchasing officer, setting forth the reasoning for the contract award decision before submitting to the Committees. .

REQUIRED DOCUMENTS FOR APPROVAL BY PURCHASING*

YES	N/A	
☒	☐	Approved Procurement Checklist (by Purchasing)
☒	☐	Memo addressed to City Manager (under 60K) Committees/City Council (over 60K)
☐	☒	State Price Agreement
☐	☒	RFP
☐	☒	Evaluation Committee Report
☒	☐	ITB
☒	☐	Bib Tab
☐	☒	Quotes (3 valid current quotes)
☐	☒	Cooperative Agreement
☐	☒	Sole Source Request and Determination Form
☐	☒	Contractors Exempt Letter
☒	☐	Purchasing Officers approval for exempt procurement
☐	☒	BAR
☐	☒	FIR
☒	☐	Executed Contract, Agreement or Amendment
☒	☐	Current Business Registration and CRS numbers on contract or agreement
☒	☐	Summary of Contracts and Agreements form
☐	☒	Certificate of Insurance
☐	☐	All documentation presented to Committees
☐	☐	Other: _____

Public Utilities Dept / Water Division/Bill Huey (Bill Huey)		Engineer	8/17/21
Department Rep Printed Name (attesting that all information included)		Title	Date
Fran Dunaway (Aug 23, 2021 12:29 MDT)		Chief Procurement Officer	Aug 23, 2021
Purchasing Officer (attesting that all information is reviewed)		Title	Date

Include all other substantive documents and records of communication that pertain to the procurement and any resulting contract.

*

City of Santa Fe, New Mexico

memo

Date: March 28, 2023

To: Finance Committee / Public Works-Public Utilities Committee

Via: Emily Oster, Finance Director EKO
Travis Dutton-Leyda, Chief Procurement Officer TDL
John Dupuis, Public Utilities Department Director
Jesse D. Roach, Water Division Director

From: Michael R. Moya, T&D Section Manager MM
Bill Huey, Water Division Engineer Associate BH

RE: Request to add funds to bid number '21/43/B for the FY 2223 Priority Line Replacement Price Agreement, CIP # 3058 A.A.C. Construction, LLC. in the amount of $2,210,000.00 including NMGRT for the remainder of the contract term (FY2024-25). Approval of the BAR – Budget Increase in the amount of $5,000,000

ITEM AND ISSUE:

The Water Division requests increasing the amount of award for bid number '21/43/B for Priority Line Replacement Price Agreement, CIP # 3058 to A.A.C. Construction, LLC by $2,210,000.00 inclusive of NMGRT for the remaining three (3) Fiscal Years, FY 2022-23 until FY2024-25.

Approval of the BAR – Budget Increase in the amount of $5,000,000 from the Water Enterprise Fund cash balance into the Water CIP fund, of which $2,210,000 is for this amendment.

BACKGROUND AND SUMMARY:

City Council has awarded bid number '21/43/B for the Priority Line Replacement Price Agreement, CIP # 3058 to Sub Surface Contracting, Inc. (Sub Surface) and A.A.C. Construction, LLC (AAC) for four (4) Fiscal Years, FY 2021-22 until FY2024-25 in the amount of $3,500,000 inclusive of NMGRT. Future funding was dependent upon the availability of CIP funds.

The Priority Line Replacement Price Agreement is an on-call requirements contract, with the Water Division issuing work orders as needed for work such as water line replacements. The contract is funded from CIP for Transmission and Distribution to work on their infrastructure.

Current expenditures on this contract are still at or below the initial contract amount. Current work on the contract will need additional funds. The contract funding needed for the completion of the contract term for AAC is $2,210,000.00 inclusive of NMGRT. Total funding for the entire contract with AAC will be $3,460,000 inclusive of NMGRT.

The attached BAR/Increase will provide funding for this AAC PLR Amendment #1 in the amount of $2,210,000 and the following Agenda Item Sub Surface PLR Amendment #1 in the amount of $2,790,000 for a combined amount of $5,000,000.

PROCUREMENT:
21/43/B for the FY 2022 Priority Line Replacement

CONTRACT NUMBER:

A.A.C Construction # 3202778.

FUNDING SOURCE:
The funding source is:
Water Enterprise Fund/ CIP
FY 2023
Fund Name/Number:: Water Enterprise Fund/ 500
Munis Org Name/Number: Water CIP / 5050395
Munis Object Name/Number: WIP Construction / 572970

RECOMMENDATION:

The Water Division recommends:

- Review and approval of increase of contract amount to A.A.C Construction, LLC for Priority Line Replacement Price Agreement, CIP # 3058 under ITB No. '21/43/B of $2,210,000.00 for a total amount of $3,460,000.00 inclusive of NMGRT through FY2024-25.

- Approval of the BAR/Increase to provide funding for this AAC PLR Amendment #1 in the amount of $2,210,000 and the following Agenda Item Sub Surface PLR Amendment #1 in the amount of $2,790,000 for a combined amount of $5,000,000.

Item# 21-0483
Munis Contract# 3202927

CITY OF SANTA FE

PRIORITY LINE REPLACEMENTPRICE
AGREEMENT

CIP # 3058

THIS AGREEMENT is made and entered into by and between the City of Santa Fe, New Mexico, hereinafter referred to as the "City," and **A.A.C. CONSTRUCTION**., hereinafter referred to as the Contractor, and is effective as of the date set forth below upon which it is executed by the Parties.

IT IS AGREED BETWEEN THE PARTIES:

1. **Scope of Work.**

A. The Contractor shall perform the following work and as described is Exhibit A attached hereto:

1) The Contractor shall perform all the work required by Water Division as required in the Contract Documents for Priority Line Replacement Contract. The work consists of, but is not limited to furnishing all equipment, labor and materials for the construction and repair of water mains, valves, hydrants, metered water service lines and settings, pressure reducing valves, vaults, and other incidental work such as pavement removal and replacement, traffic control all as required to extend, replace or repair water distribution, water storage, and water supply infrastructure, in accordance with the drawings, specifications, and other Contract Documents. All water piping shall be new, poly-wrapped ductile iron, unless otherwise specified.

2) The Contractor shall be responsible for verifications of all measurements and dimensions for bidding on each subsequent Work Order.

3) The Contractor shall provide and keep at the work site a complete "as built" record set of drawings that shall be corrected daily and shall show every change from the original approved drawings and specifications. These changes shall be forwarded to City periodically. The drawings shall reflect exact and actual "as-built" conditions of construction, installation, and erection as it progresses. Where drawings are not adequate to show "as built" conditions. Contractor shall prepare sketches which delineate the necessary "asbuilt" information. City shall furnish two (2) sets of all paper "blue-line" print "approved" drawings for use in accomplishing specified mark up. Final "as built" drawings shall be delivered to City by Contractor upon completion of the work.

4) The Contractor shall be responsible for maintaining traffic control at the site in conformance with the Manual on Uniform Traffic Control Devices.

5) The Contractor shall be responsible for all permits, fees, and State andCity inspections associated with the construction.

6) Incorporation by Reference. All exhibits, addenda, schedules of ITB 21/XX/B attached hereto and all certificates, work order documents, drawings, as-built and other

instruments contemplated to be delivered hereunder are hereby expressly made a part of this Agreement as fully as though set forth herein, and all references to this Agreement herein orin any of such writings shall be deemed to refer to and include all of such writings. This Agreement contains the entire agreement between the parties with respect to the subject matter hereof and supersedes all prior agreements and understandings, both written and oral, among the parties with respect to the subject matter hereof. If there is any conflict between such exhibits or addenda and the terms of this Agreement, such exhibits or addenda shall control.

2. Compensation.

A. The City shall pay to the Contractor in full payment for services satisfactorily performed at total amount up to one million one hundred fifty two thousand seven hundred thirty seven dollars and seventy-five cents ($1,152,737.75). The New Mexico gross receipts tax levied on the amounts payable under this Agreement totaling ninety seven thousand two hundred sixty two dollars and twenty five cents ($97,262.25) shall be paid by the City to the Contractor as described in Exhibit A attached hereto. **The total amount payable to the Contractor under this Agreement, including gross receipts tax and expenses, shall not exceed one million two hundred fifty thousand dollars ($1,250,000)). This amount is a maximum and not a guarantee that the work assigned to be performed by Contractor under this Agreement shall equal the amount stated herein. The parties do not intend for the Contractor to continue to provide services without compensation when the total compensation amount is reached. Contractor is responsible for notifying the City when the services provided under this Agreement reach the total compensation amount. In no event will the Contractor be paid for services provided in excess of the total compensation amount without this Agreement being amended in writing prior to those services in excess of the total compensation amount being provided.**

B. Payment is subject to availability of funds pursuant to the Appropriations Paragraph set forth below and to any negotiations between the parties from year to year pursuant to Paragraph 1, Scope of Work, and to approval by the City. All invoices MUST BE received by the City no later than thirty 30) days after the termination of the Fiscal Year in which the services were delivered. Invoices received after such date WILL NOT BE PAID.

C. Contractor must submit a detailed statement accounting for all services performed and expenses incurred. If the City finds that the services are not acceptable, within thirty days after the date of receipt of written notice from the Contractor that payment is requested, it shall provide the Contractor a letter of exception explaining the defect or objection to the services, and outlining steps the Contractor may take to provide remedial action. Upon certification by the City that the services have been received and accepted, payment shall be tendered to the Contractor within thirty days after the date of acceptance. If payment is made by mail, the payment shall be deemed tendered on the date it is postmarked. However, the City shall not incur late charges, interest, or penalties for failure to make payment within the time specified herein.

3. Term.

THIS AGREEMENT SHALL NOT BECOME EFFECTIVE UNTIL APPROVED BY THE CITY. This Agreement shall terminate on **June 30, 2025** unless terminated pursuant to paragraph 4 (Termination), or paragraph 5 (Appropriations). In accordance with Section 13-1-150 NMSA 1978, no contract term for a professional services contract, including extensions and renewals, shall exceed four years, except as set forth in Section 13-1-150 NMSA 1978.

4. Termination.

A. Termination. This Agreement may be terminated by either of the parties hereto upon written notice delivered to the other party at least thirty (30) days prior to the intended dateof termination. Except as otherwise allowed or provided under this Agreement, the City sole liability upon such termination shall be to pay for acceptable work performed prior to the Contractor's receipt

of the notice of termination, if the City is the terminating party, or the Contractors receipt of the notice of termination, if the Contractor is the terminating party; provided, however, that a notice of termination shall not nullify or otherwise affect either party'sliability for pre-termination defaults under or breaches of this Agreement. The Contractor shall submit an invoice for such work within thirty (30) days of receiving or sending the notice of termination. Notwithstanding the foregoing, this Agreement may be terminated immediately upon written notice to the Contractor if the Contractor becomes unable to perform the services contracted for, as determined by the City or if, during the term of this Agreement, the Contractor or any of its officers, employees or agents is indicted for fraud, embezzlement or other crime dueto misuse of City funds or due to the Appropriations paragraph herein. *THIS PROVISION JS NOT EXCLUSIVE AND DOES NOT WAIVE THE OTHER LEGAL RIGHTS AND REMEDIES CAUSED BY THE CONTRACTOR'S DEFAULT/BREACH OF THIS AGREEMENT.*

B. Termination Management. Immediately upon receipt by either the City or the Contractor of notice of termination of this Agreement, the Contractor shall: 1) not incur any further obligations for salaries, services or any other expenditure of funds under this Agreement withoutwritten approval of the City; 2) comply with all directives issued by the City in the notice oftermination as to the performance of work under this Agreement; and 3) take such action as the City shall direct for the protection, preservation, retention or transfer of all property titled to theCity and records generated under this Agreement. Any non-expendable personal property orequipment provided to or purchased by the Contractor with contract funds shall become property of the City upon termination and shall be submitted to the City as soon as practicable.

5. Appropriations.

The terms of this Agreement are contingent upon sufficient appropriations and authorization being made by the City Council for the performance of this Agreement. If sufficient appropriations and authorization are not made by the City Council, this Agreement shall terminate immediately upon written notice being given by the City to the Contractor. The City's decision asto whether sufficient appropriations are available shall be accepted by the Contractor and shall be final. If the City proposes an amendment to the Agreement to unilaterally reduce funding, the Contractor shall have the option to terminate the Agreement or to agree to the reduced funding, within thirty (30) days of receipt of the proposed amendment.

6. Status of Contractor.

The Contractor and its agents and employees are independent contractors performing professional services for the City and are not employees of the City. The Contractor and its agents and employees shall not accrue leave, retirement, insurance, bonding, use of City vehicles, or anyother benefits afforded to employees of the City as a result of this Agreement. The Contractor acknowledges that all sums received hereunder are reportable by the Contractor for tax purposes, including without limitation, self-employment and business income tax. The Contractor agrees not to purport to bind the City unless the Contractor has express written authority to do so, and then only within the strict limits of that authority.

7. Construction Contract Performance and Payment Bond.

A. When a construction contract is awarded in excess of twenty-five thousand dollars ($25,000), the following bonds or security shall be delivered to the City and shall become binding on the parties upon the execution of the contract. If the Contractor fails to deliver the required performance and payment bonds, the Contractor's bid shall be rejected, its bid security shall be enforced to the extent of actual damages. Award of the contract shall be made pursuant to the Procurement Code in the following manner:

(1) a performance bond satisfactory to the City, executed by a surety company

authorized to do business in this state and said surety to be approved in federal circular 570 as published by the United States treasury department or the state board of finance or the local governing authority, in an amount equal to one hundred percent of the price specifiedin the contract; and

(2) a payment bond satisfactory to the City, executed by a surety company authorized to do business in this state and said surety to be approved in federal circular 570 as published by the United States treasury department or the state board of finance or the local governing authority, in an amount equal to one hundred percent of the price specifiedin the contract, for the protection of all persons supplying labor and material to the contractor or its subcontractors for the performance of the work provided for in the contract.

B. A subcontractor shall provide a performance and payment bond on a public works Building project if the subcontractor's contract for work to be performed on a project is one hundred twenty-five thousand dollars ($125,000) or more.

8. Assignment.

The Contractor shall not assign or transfer any interest in this Agreement or assign any claims for money due or to become due under this Agreement without the prior written approval of the City.

9. Subcontracting.

The Contractor shall not subcontract any portion of the services to be performed under this Agreement without the prior written approval of the City. No such subcontract shall relieve the primary Contractor from its obligations and liabilities under this Agreement, nor shall any subcontract obligate direct payment from the City.

10. Release.

Final payment of the amounts due under this Agreement shall operate as a release of the City, its officers and employees from all liabilities, claims and obligations whatsoever arising from or under this Agreement.

11. Confidentiality.

Any confidential information provided to or developed by the Contractor in the performance of this Agreement shall be kept confidential and shall not be made available to any individual or organization by the Contractor without the prior written approval of the City.

12. Product of Service – Copyright.

All materials developed or acquired by the Contractor under this Agreement shall becomethe property of the City and shall be delivered to the City no later than the termination date of this Agreement. Nothing developed or produced, in whole or in part, by the Contractor under this Agreement shall be the subject of an application for copyright or other claim of ownership by or on behalf of the Contractor.

13. Conflict of Interest; Governmental Conduct Act.

A. The Contractor represents and warrants that it presently has no interest and, duringthe term of this Agreement, shall not acquire any interest, direct or indirect, which would conflictin any manner or degree with the performance or services required under the Agreement.

B. The Contractor further represents and warrants that it has complied with, and, during the term of this Agreement, will continue to comply with, and that this Agreement complies with all applicable

provisions of the Governmental Conduct Act, Chapter 10, Article 16 NMSA 1978.

C. Contractor's representations and warranties in Paragraphs A and B of this Article 13 are material representations of fact upon which the City relied when this Agreement was enteredinto by the parties. Contractor shall provide immediate written notice to the City if, at any timeduring the term of this Agreement, Contractor learns that Contractor's representations and warranties in Paragraphs A and B of this Article 13 were erroneous on the effective date of this Agreement or have become erroneous by reason of new or changed circumstances. If it is laterdetermined that Contractor's representations and warranties in Paragraphs A and B of this Article 13 were erroneous on the effective date of this Agreement or have become erroneous by reason ofnew or changed circumstances, in addition to other remedies available to the City and notwithstanding anything in the Agreement to the contrary, the City may immediately terminate the Agreement.

D. All terms defined in the Governmental Conduct Act have the same meaning in thissection.

14. Amendment.

A. This Agreement shall not be altered, changed or amended except by instrument in writing executed by the parties hereto and all other required signatories.

B. If the City proposes an amendment to the Agreement to unilaterally reduce funding due to budget or other considerations, the Contractor shall, within thirty (30) days of receipt of the proposed Amendment, have the option to terminate the Agreement, pursuant to the termination provisions as set forth in Article 4 herein, or to agree to the reduced funding.

15. Change Orders.

A. Changes. The Contractor may only make changes or revisions within the Scope of Work as defined by Article 1 and/or Exhibit 1 after receipt of written approval by the City Manager or his/her designee. Such change may only be made to Tasks or Sub-Task as defined in the Scope of Work. Under no circumstance shall such change affect the:

1) Deliverable requirements, as outlined in the Scope of Work;
2) Due date of any Deliverable, as outlined in the Scope of Work;
3) Compensation of any Deliverable, as outlined in the Scope of Work;
4) Agreement compensation, as outlined in Article 2; or
5) Agreement termination, as outlined in Article 4.

B. Change Request Process. In the event that circumstances warrant a change to accomplish the Scope of Work as described above, a Change Request shall be submitted that meets the following criteria:

1) The Project Manager shall draft a written Change Request for review and approval by the City Manager to include:
   (a) the name of the person requesting the change;
   (b) a summary of the required change;
   (c) the start date for the change;
   (d) the reason and necessity for change;
   (e) the elements to be altered; and
   (f) The impact of the change.

2) The City Manager shall provide a written decision on the Change Request to the Contractor within a maximum of ten (10) Business Days of receipt of the Change Request. All decisions made by the City Manager are final. Change Requests, once approved, become a part of the Agreement and become binding as a part of the original Agreement.

16. Merger.

This Agreement incorporates all the Agreements, covenants and understandings between the parties hereto concerning the subject matter hereof, and all such covenants, Agreements and understandings have been merged into this written Agreement. No prior Agreement or understanding, oral or otherwise, of the parties or their agents shall be valid or enforceable unless embodied in this Agreement.

17. Penalties for violation of law.

The Procurement Code, Sections 13-1-28 through 13-1-199, NMSA 1978, imposes civil and criminal penalties for its violation. In addition, the New Mexico criminal statutes imposefelony penalties for illegal bribes, gratuities and kickbacks.

18. Equal Opportunity Compliance.

The Contractor agrees to abide by all federal and state laws and rules and regulations, andSanta Fe City Code, pertaining to equal employment opportunity. In accordance with all such laws of the State of New Mexico, the Contractor assures that no person in the United States shall, on the grounds of race, religion, color, national origin, ancestry, sex, age, physical or mental handicap, or serious medical condition, spousal affiliation, sexual orientation or gender identity, be excluded from employment with or participation in, be denied the benefits of, or be otherwise subjected to discrimination under any program or activity performed under this Agreement. If Contractor is found not to be in compliance with these requirements during the life of this Agreement, Contractor agrees to take appropriate steps to correct these deficiencies.

19. Applicable Law.

The laws of the State of New Mexico shall govern this Agreement, without giving effect to its choice of law provisions. Venue shall be proper only in a New Mexico court of competent jurisdiction in accordance with Section 38-3-1 (G) NMSA 1978. By execution of this Agreement, Contractor acknowledges and agrees to the jurisdiction of the courts of the State of New Mexicoover any and all lawsuits arising under or out of any term of this Agreement.

20. Workers Compensation.

The Contractor agrees to comply with state laws and rules applicable to workers compensation benefits for its employees. If the Contractor fails to comply with the Workers Compensation Act and applicable rules when required to do so, this Agreement may be terminated by the City.

21. Professional Liability Insurance. Contractor shall maintain professional liability insurance throughout the term of this Agreement providing a minimum coverage in the amount required under the New Mexico Tort Claims Act. The Contractor shall furnish the City with proofof insurance of Contractor's compliance with the provisions of this section as a condition prior toperforming services under this Agreement.

22. Other Insurance

If the Services contemplated under this Agreement will be performed on or in City facilitiesor

property, Contractor shall maintain in force during the entire term of this Agreement, the following insurance coverage(s), naming the City as additional insured,

A. **Commercial General Liability** insurance shall be written on an occurrence basis and be a broad as ISO Form CG 00 01 with limits not less than $2,000,000 per occurrence and #2,000,000 in the aggregate for claims against bodily injury, personal and advertising injury, and property damage. Said policy shall include broad from Contractual Liability coverage and be endorsed to name the City of Santa Fe, their officials, officers, employees and agents as additionalinsureds.

B. **Business Automobile Liability** insurance for all owned, non-owned automobiles,with a combined single limit not less than $1,000,000 per accident.

C. **Broader Coverage and Limits.** The insurance requirements under this Agreement shall be the greater of (1) the minimum coverage and limits specified in this Agreement, or (2) the broader coverage and maximum limits of coverage of any insurance policy or proceeds available tothe Named Insured. It is agreed that these insurance requirements shall not in any way act to reduce coverage that is broader or that includes higher limits than the minimums required herein. No representation is made that minimum insurance requirements of this Agreement are sufficient to cover the obligations of Contractor hereunder.

D. Contractor shall maintain the above insurance for the term of this Agreement and name the City as an additional insured and provide for 30 days cancellation notice on any Certificate of Insurance form furnished by Contractor. Such certificate shall also specifically state the coverage provided under the policy is primary over any other valid and collectible insurance and provide a waiver of subrogation.

23. Records and Financial Audit.

The Contractor shall maintain detailed time and expenditure records that indicate the date; time, nature and cost of services rendered during the Agreement's term and effect and retain them for a period of three (3) years from the date of final payment under this Agreement. The records shall be subject to inspection by the City. The City shall have the right to audit billings both before and after payment. Payment under this Agreement shall not foreclose the right of the City to recover excessive or illegal payments.

24. Indemnification.

The Contractor shall defend, indemnify and hold harmless the City from all actions, proceeding, claims, demands, costs, damages, attorney's fees and all other liabilities and expenses of any kind from any source which may arise out of the performance of this Agreement, caused by the negligent act or failure to act of the Contractor, its officers, employees, servants, subcontractors or agents, or if caused by the actions of any client of the Contractor resulting in injury or damageto persons or property during the time when the Contractor or any officer, agent, employee, servantor subcontractor thereof has or is performing services pursuant to this Agreement. In the event that any action, suit or proceeding related to the services performed by the Contractor or any officer, agent, employee, servant or subcontractor under this Agreement is brought against the Contractor,the Contractor shall, as soon as practicable but no later than two (2) days after it receives notice thereof, notify the legal counsel of the City.

25. New Mexico Tort Claims Act

Any liability incurred by the City of Santa Fe in connection with this Agreement is subjectto the immunities and limitations of the New Mexico Tort Claims Act, Section 41-4-1, et. seq.NMSA 1978, as amended. The city and its "public employees" as defined in the New Mexico Tort Claims Act, do not waive sovereign immunity, do not waive any defense and do not waive anylimitation of liability pursuant to law. No provision in this Agreement modifies or waives any provision of the New Mexico

Tort Claims Act.

26. Invalid Term or Condition.

If any term or condition of this Agreement shall be held invalid or unenforceable, the remainder of this Agreement shall not be affected and shall be valid and enforceable.

27. Enforcement of Agreement.

A party's failure to require strict performance of any provision of this Agreement shall notwaive or diminish that party's right thereafter to demand strict compliance with that or any other provision. No waiver by a party of any of its rights under this Agreement shall be effective unlessexpress and in writing, and no effective waiver by a party of any of its rights shall be effective to waive any other rights.

28. Notices.

Any notice required to be given to either party by this Agreement shall be in writing andshall be delivered in person, by courier service or by U.S. mail, either first class or certified, return receipt requested, postage prepaid, as follows:

To the City:
Water Division Director
801 W. San Mateo
Santa Fe, NM 87505

To the Contractor:
A.AC Construction LLC
18 La Luna Road
Santa Fe, NM 87507

29. Authority.

If Contractor is other than a natural person, the individual(s) signing this Agreement on behalf of Contractor represents and warrants that he or she has the power and authority to bindContractor, and that no further action, resolution, or approval from Contractor is necessary to enterinto a binding contract.

IN WITNESS WHEREOF, the Parties have executed this Agreement as of the date of the signatureby the required approval authorities below.

CITY OF SANTA FE:

ALAN WEBBER, MAYOR

DATE: Sep 12, 2021

CONTRACTOR:

Andrew Sisneros (Aug 19, 2021 16:05 MDT)

NAME
Andrew Sisneros, Managing Member

TITLE
DATE: Aug 19, 2021

CRS# 03-157349-00-5
Registration # 222939

ATTEST:

Kristine Mihelcic
Kristine Mihelcic (Sep 15, 2021 12:10 MDT)

KRISTINE BUSTOS MIHELCIC, CITY CLERK
GB MTG 09/08/2021

CITY ATTORNEY'S OFFICE:

Marcos Martinez
Marcos Martinez (Aug 17, 2021 10:24 MDT)

SENIOR ASSISTANT CITY ATTORNEY

APPROVED FOR FINANCES:

Mary McCoy

MARY MCCOY, FINANCE DIRECTOR

5050395.572970
Org. Name/Org#

AJH
AJH

Bid Item	Approx. QTY.	Unit	Article and Description	AAC		Sub Surface	
				Unit Price	Item Price	Unit Price	Item Price
5	35	LF	2" PVC Water Main, cip, all lengths	$ 32.50	$ 1,137.50	$ 30.00	$ 1,050.00
10	35	LF	4" PVC Water Main, cip, <100'	$ 38.00	$ 1,330.00	$ 36.00	$ 1,260.00
15	100	LF	4" PVC Water Main, cip, >100'	$ 36.00	$ 3,600.00	$ 34.00	$ 3,400.00
20	50	LF	6" PVC Water Main, cip, <100'	$ 43.50	$ 2,175.00	$ 42.00	$ 2,100.00
25	150	LF	6" PVC Water Main, cip, >100'	$ 40.50	$ 6,075.00	$ 39.00	$ 5,850.00
30	75	LF	8" PVC Water Main, cip, <100'	$ 49.00	$ 3,675.00	$ 48.00	$ 3,600.00
35	200	LF	8" PVC Water Main, cip, >100'	$ 46.75	$ 9,350.00	$ 45.50	$ 9,100.00
40	35	LF	10" PVC Water Main, cip, <100'	$ 56.00	$ 1,960.00	$ 52.00	$ 1,820.00
45	100	LF	10" PVC Water Main, cip, >100'	$ 52.00	$ 5,200.00	$ 49.00	$ 4,900.00
50	50	LF	12" PVC Water Main, cip, <100'	$ 69.37	$ 3,468.50	$ 66.75	$ 3,337.50
55	150	LF	12" PVC Water Main, cip, >100'	$ 66.25	$ 9,937.50	$ 64.50	$ 9,675.00
60	50	LF	14" PVC Water Main, cip	$ 87.00	$ 4,350.00	$ 79.00	$ 3,950.00
65	50	LF	16" PVC Water Main, cip	$ 103.50	$ 5,175.00	$ 97.00	$ 4,850.00
70	50	LF	24" PVC Water Main, cip	$ 167.50	$ 8,375.00	$ 100.00	$ 5,000.00
75	35	LF	2" DI Water Main, cip, all lengths	$ 42.00	$ 1,470.00	$ -	$ -
80	50	LF	4" DI Water Main, cip, <100'	$ 63.75	$ 3,187.50	$ 57.50	$ 2,875.00
85	100	LF	4" DI Water Main, cip, >100'	$ 56.50	$ 5,650.00	$ 56.00	$ 5,600.00
90	75	LF	6" DI Water Main, cip, <100'	$ 63.50	$ 4,762.50	$ 53.00	$ 3,975.00
95	250	LF	6" DI Water Main, cip, >100'	$ 56.50	$ 14,125.00	$ 51.00	$ 12,750.00
100	75	LF	8" DI Water Main, cip, <100'	$ 68.00	$ 5,100.00	$ 60.25	$ 4,518.75
105	250	LF	8" DI Water Main, cip, >100'	$ 73.00	$ 18,250.00	$ 58.00	$ 14,500.00
110	35	LF	10" DI Water Main, cip, <100'	$ 77.00	$ 2,695.00	$ 65.00	$ 2,275.00
115	100	LF	10" DI Water Main, cip, >100'	$ 74.00	$ 7,400.00	$ 63.00	$ 6,300.00
120	50	LF	12" DI Water Main, cip, <100'	$ 99.00	$ 4,950.00	$ 78.00	$ 3,900.00
125	100	LF	12" DI Water Main, cip, >100'	$ 89.50	$ 8,950.00	$ 74.00	$ 7,400.00
130	50	LF	14" DI Water Main, cip	$ 115.50	$ 5,775.00	$ 87.00	$ 4,350.00
135	50	LF	16" DI Water Main, cip	$ 139.50	$ 6,975.00	$ 101.00	$ 5,050.00
140	50	LF	24" DI Water Main, cip	$ 207.00	$ 10,350.00	$ 159.00	$ 7,950.00
145	75	LF	Extra Pay for Trench Depth, 6'-8'	$ 41.00	$ 3,075.00	$ 8.00	$ 600.00
150	50	LF	Extra Pay for Trench Depth, 8'-10'	$ 98.00	$ 4,900.00	$ 12.00	$ 600.00
155	25	LF	Extra Pay for Trench Depth, 10'-14'	$ 154.00	$ 3,850.00	$ 30.00	$ 750.00
160	20	CY	Rock Excavation	$ 325.00	$ 6,500.00	$ 220.00	$ 4,400.00
165	300	CY	Exploratory Excavation (as SDCW Approved)	$ 50.00	$ 15,000.00	$ 65.00	$ 19,500.00
170	75	CY	Imported Backfill (as SDCW Approved)	$ 36.00	$ 2,700.00	$ 24.00	$ 1,800.00
175	1,000	LB	Fitting Installation	$ 4.50	$ 4,500.00	$ 4.00	$ 4,000.00
180	500	LB	Fitting Insertion	$ 26.00	$ 13,000.00	$ 34.00	$ 17,000.00
185	25	EA	4" Retainer Ring/ Bolt on Flange	$ 60.00	$ 1,500.00	$ 65.00	$ 1,625.00
190	50	EA	6" Retainer Ring/ Bolt on Flange	$ 86.50	$ 4,325.00	$ 105.00	$ 5,250.00
195	50	EA	8" Retainer Ring/ Bolt on Flange	$ 98.50	$ 4,925.00	$ 119.00	$ 5,950.00
200	20	EA	10" Retainer Ring/ Bolt on Flange	$ 123.00	$ 2,460.00	$ 121.00	$ 2,420.00
205	20	EA	12" Retainer Ring/ Bolt on Flange	$ 147.50	$ 2,950.00	$ 145.00	$ 2,900.00
210	20	EA	14" Retainer Ring/ Bolt on Flange	$ 184.50	$ 3,690.00	$ 179.00	$ 3,580.00
215	10	EA	16" Retainer Ring/ Bolt on Flange	$ 275.00	$ 2,750.00	$ 250.00	$ 2,500.00
220	25	EA	4" Joint Harness	$ 70.50	$ 1,762.50	$ 40.00	$ 1,000.00
225	50	EA	6" Joint Harness	$ 95.00	$ 4,750.00	$ 110.00	$ 5,500.00
230	50	EA	8" Joint Harness	$ 125.00	$ 6,250.00	$ 120.00	$ 6,000.00
235	20	EA	10" Joint Harness	$ 160.00	$ 3,200.00	$ 160.00	$ 3,200.00
240	20	EA	12" Joint Harness	$ 192.50	$ 3,850.00	$ 180.00	$ 3,600.00
245	20	EA	14" Joint Harness	$ 370.00	$ 7,400.00	$ 375.00	$ 7,500.00
250	10	EA	16" Joint Harness	$ 427.50	$ 4,275.00	$ 410.00	$ 4,100.00
255	10	CY	Concrete Thrust Blocking (as SDCW Approved)	$ 315.00	$ 3,150.00	$ 250.00	$ 2,500.00
260	2	EA	Tapping Sleeve w/ Tap, 4" X 4"	$ 1,350.00	$ 2,700.00	$ 1,350.00	$ 2,700.00
265	4	EA	Tapping Sleeve w/ Tap, 6" X 4" - 6"	$ 1,567.50	$ 6,270.00	$ 1,500.00	$ 6,000.00
270	4	EA	Tapping Sleeve w/ Tap, 8" X 4" - 8"	$ 1,900.00	$ 7,600.00	$ 1,800.00	$ 7,200.00

Bid Item	Approx. QTY.	Unit	Article and Description	AAC		Sub Surface	
				Unit Price	Item Price	Unit Price	Item Price
275	2	EA	Tapping Sleeve w/ Tap, 10" X 4" - 10"	$ 2,250.00	$ 4,500.00	$ 2,100.00	$ 4,200.00
280	4	EA	Tapping Sleeve w/ Tap, 12" X 4" - 12"	$ 2,650.00	$ 10,600.00	$ 2,300.00	$ 9,200.00
285	1	EA	Tapping Sleeve w/Tap, 20" X 4" - 20"	$ 4,747.50	$ 4,747.50	$ 4,200.00	$ 4,200.00
290	1	EA	Non-Pressurized Connections, 2" line	$ 1,650.00	$ 1,650.00	$ 1,500.00	$ 1,500.00
295	1	EA	Non-Pressurized Connections, 4"-10" line	$ 3,587.50	$ 3,587.50	$ 3,100.00	$ 3,100.00
300	1	EA	Non-Pressurized Connections, 12"-20" line	$ 6,050.00	$ 6,050.00	$ 4,100.00	$ 4,100.00
305	2	EA	2" CL125 Gate Valves, cip.	$ 807.50	$ 1,615.00	$ 850.00	$ 1,700.00
310	2	EA	4" CL125 Gate Valves, cip.	$ 925.00	$ 1,850.00	$ 1,200.00	$ 2,400.00
315	5	EA	6" CL125 Gate Valves, cip.	$ 1,200.00	$ 6,000.00	$ 1,525.00	$ 7,625.00
320	5	EA	8" CL125 Gate Valves, cip.	$ 1,650.00	$ 8,250.00	$ 1,725.00	$ 8,625.00
325	1	EA	10" CL125 Gate Valves, cip.	$ 2,315.00	$ 2,315.00	$ 2,325.00	$ 2,325.00
330	2	EA	12" CL125 Gate Valves, cip.	$ 2,900.00	$ 5,800.00	$ 2,800.00	$ 5,600.00
335	1	EA	2" CL250 Gate Valves, cip.	$ 792.50	$ 792.50	$ 700.00	$ 700.00
340	1	EA	4" CL250 Gate Valves, cip.	$ 1,837.50	$ 1,837.50	$ 1,800.00	$ 1,800.00
345	10	EA	6" CL250 Gate Valves, cip.	$ 1,950.00	$ 19,500.00	$ 1,825.00	$ 18,250.00
350	3	EA	8" CL250 Gate Valves, cip.	$ 2,475.00	$ 7,425.00	$ 2,000.00	$ 6,000.00
355	1	EA	10" CL250 Gate Valves, cip.	$ 4,000.00	$ 4,000.00	$ 3,700.00	$ 3,700.00
360	1	EA	12" CL250 Gate Valves, cip.	$ 4,552.50	$ 4,552.50	$ 4,200.00	$ 4,200.00
365	1	EA	16" CL250 Gate Valves, cip.	$ 7,025.00	$ 7,025.00	$ 6,500.00	$ 6,500.00
370	1	EA	20" CL250 Gate Valves, cip.	$ 16,755.00	$ 16,755.00	$ 16,190.00	$ 16,190.00
375	1	EA	24" CL250 Gate Valves, cip.	$ 23,750.00	$ 23,750.00	$ 23,250.00	$ 23,250.00
380	1	EA	12" CL250 Butterfly Valves, cip.	$ 2,800.00	$ 2,800.00	$ 2,800.00	$ 2,800.00
385	1	EA	16" CL250 Butterfly Valves, cip.	$ 4,975.00	$ 4,975.00	$ 4,850.00	$ 4,850.00
390	1	EA	20" CL250 Butterfly Valves, cip.	$ 7,680.00	$ 7,680.00	$ 6,600.00	$ 6,600.00
395	1	EA	24" CL250 Butterfly Valves, cip.	$ 10,042.50	$ 10,042.50	$ 9,125.00	$ 9,125.00
400	5	EA	Fire Hydrant, 5' or less bury, cip.	$ 2,987.50	$ 14,937.50	$ 3,200.00	$ 16,000.00
405	2	EA	Fire Hydrant Extension, 6" or 12" length	$ 767.50	$ 1,535.00	$ 700.00	$ 1,400.00
410	1	EA	Fire Hydrant Extension, 18" or 24" length	$ 1,017.50	$ 1,017.50	$ 920.00	$ 920.00
415	1	EA	Fire Hydrant Remove & Relay	$ 1,350.00	$ 1,350.00	$ 700.00	$ 700.00
420	1	EA	Fire Hydrant Remove & Return	$ 887.50	$ 887.50	$ 575.00	$ 575.00
425	1	EA	2 1/4" Flush Hydrant	$ 1,657.50	$ 1,657.50	$ 1,500.00	$ 1,500.00
430	1	EA	2" Blow-Off Valve Installation	$ 1,420.00	$ 1,420.00	$ 1,300.00	$ 1,300.00
435	1	EA	2" Pressure Relief Valve, cip.	$ 6,780.00	$ 6,780.00	$ 6,725.00	$ 6,725.00
440	1	EA	3" Pressure Relief Valve, cip.	$ 7,065.50	$ 7,065.50	$ 6,950.00	$ 6,950.00
445	1	EA	4" Pressure Relief Valve, cip.	$ 8,432.50	$ 8,432.50	$ 8,195.00	$ 8,195.00
450	1	EA	6" Pressure Relief Valve, cip.	$ 11,091.50	$ 11,091.50	$ 10,800.00	$ 10,800.00
455	1	EA	8" Pressure Relief Valve, cip.	$ 15,362.50	$ 15,362.50	$ 14,925.00	$ 14,925.00
460	1	EA	12" Pressure Relief Valve, cip.	$ 29,837.50	$ 29,837.50	$ 29,500.00	$ 29,500.00
465	1	EA	Air & Vacuum Release Valve, 1"	$ 2,970.00	$ 2,970.00	$ 2,750.00	$ 2,750.00
470	1	EA	Air & Vacuum Release Valve, 2"	$ 4,245.00	$ 4,245.00	$ 3,940.00	$ 3,940.00
475	1	EA	Install City of Santa Fe Furnished Valve/Meter, 2" - 4"	$ 825.00	$ 825.00	$ 450.00	$ 450.00
480	1	EA	Install City of Santa Fe Furnished Valve/Meter, 6" - 8"	$ 1,025.00	$ 1,025.00	$ 550.00	$ 550.00
485	1	EA	Install City of Santa Fe Furnished Valve/Meter, 10"-12"	$ 1,275.00	$ 1,275.00	$ 750.00	$ 750.00
490	1	EA	Metered 2" Bypass – Vault Installation	$ 4,000.00	$ 4,000.00	$ 3,185.00	$ 3,185.00
495	20	EA	Valve Box, cip.	$ 575.00	$ 11,500.00	$ 625.00	$ 12,500.00
500	5	EA	Valve Box Replacement	$ 750.00	$ 3,750.00	$ 775.00	$ 3,875.00
505	5	EA	Valve Box Removal of Existing	$ 425.00	$ 2,125.00	$ 325.00	$ 1,625.00
510	3	EA	Valve Box Adjustment	$ 600.00	$ 1,800.00	$ 550.00	$ 1,650.00
515	1	EA	Valve Stem Extension, 0'-4' Depth	$ 200.00	$ 200.00	$ 250.00	$ 250.00
520	4	VF	Precast 4' Diameter Pit w/ Lid Min. 4' Depth	$ 925.00	$ 3,700.00	$ 825.00	$ 3,300.00
525	8	VF	Precast 6' Diameter Pit w/ Lid Min. 4' Depth	$ 1,000.00	$ 8,000.00	$ 1,050.00	$ 8,400.00
530	8	VF	Precast 8' Diameter Pit w/ Lid Min. 4' Depth	$ 1,500.00	$ 12,000.00	$ 1,075.00	$ 8,600.00
535	7	CY	Cast-In-Place RCP Vault w/ Lid	$ 1,000.00	$ 7,000.00	$ 1,025.00	$ 7,175.00
540	1	EA	Prefabricated Vault, 4' X 8'	$ 8,900.00	$ 8,900.00	$ 8,995.00	$ 8,995.00

				AAC		Sub Surface	
Bid Item	Approx. QTY.	Unit	Article and Description	Unit Price	Item Price	Unit Price	Item Price
545	1	ACRE	Native Seeding	$ 2,600.00	$ 2,600.00	$ 2,275.00	$ 2,275.00
550	1	EA	Bollards (pair)	$ 1,180.00	$ 1,180.00	$ 975.00	$ 975.00
555	18	LF	4" Steel Casing	$ 31.37	$ 564.66	$ 95.00	$ 1,710.00
560	18	LF	4" PVC Casing	$ 15.40	$ 277.20	$ 75.00	$ 1,350.00
565	18	LF	14" Steel Casing	$ 107.43	$ 1,933.74	$ 175.00	$ 3,150.00
570	18	LF	16" Steel Casing	$ 124.02	$ 2,232.36	$ 200.00	$ 3,600.00
575	18	LF	18" Steel Casing	$ 144.03	$ 2,592.54	$ 275.00	$ 4,950.00
580	18	LF	22" Steel Casing	$ 234.94	$ 4,228.92	$ 300.00	$ 5,400.00
585	18	LF	26" Steel Casing	$ 290.67	$ 5,232.06	$ 400.00	$ 7,200.00
590	18	LF	28" Steel Casing	$ 187.04	$ 3,366.72	$ 450.00	$ 8,100.00
595	18	LF	30" Steel Casing	$ 187.04	$ 3,366.72	$ 450.00	$ 8,100.00
600	18	LF	36" Steel Casing	$ 287.03	$ 5,166.54	$ 500.00	$ 9,000.00
605	50	DIA-IN-LF	Bore & Jack Casing Pipe	$ 575.00	$ 28,750.00	$ 40.00	$ 2,000.00
610	18	LF	Open Cut Casing Pipe Installation, < 6' Deep	$ 62.00	$ 1,116.00	$ 39.00	$ 702.00
615	25	SY	Asphalt Pavement Removal & Disposal, <2"	$ 29.50	$ 737.50	$ 65.00	$ 1,625.00
620	200	SY	Asphalt Pavement Removal & Disposal, 2"-6"	$ 17.70	$ 3,540.00	$ 65.00	$ 13,000.00
625	10	SY	Concrete Pavement Removal & Disposal, <2"	$ 97.50	$ 975.00	$ 90.00	$ 900.00
630	10	SY	Concrete Pavement Removal & Disposal, 2"-6"	$ 132.50	$ 1,325.00	$ 95.00	$ 950.00
635	50	LF	Concrete Curb and Gutter Removal & Disposal	$ 12.00	$ 600.00	$ 25.00	$ 1,250.00
640	10	SY	Concrete Sidewalk Removal & Disposal	$ 65.00	$ 650.00	$ 30.00	$ 300.00
645	50	SY	Replace City Street Pavement w/o Laydown Machine, Virgin Asphalt	$ 74.50	$ 3,725.00	$ 75.00	$ 3,750.00
650	50	SY	Replace City Street Pavement w/o Laydown Machine, Recycled Asphalt	$ 74.50	$ 3,725.00	$ 75.00	$ 3,750.00
655	50	SY	Replace City Street Pavement with Laydown Machine, Virgin Asphalt	$ 72.00	$ 3,600.00	$ 75.00	$ 3,750.00
660	10	SY	Replace City Street Pavement with Laydown Machine, Recycled Asphalt	$ 84.96	$ 849.60	$ 75.00	$ 750.00
665	10	SY	Replace City Street Pavement with Temporary Cold Mix	$ 167.56	$ 1,675.60	$ 75.00	$ 750.00
670	100	SY	Replace Non-City Street Pavement w/o Laydown Machine, Virgin Asphalt	$ 74.50	$ 7,450.00	$ 75.00	$ 7,500.00
675	10	SY	Replace Non-City Street Pavement w/o Laydown Machine, Recycled Asphalt	$ 74.50	$ 745.00	$ 75.00	$ 750.00
680	10	SY	Replace Non-City Street Pavement with Laydown Machine, Virgin Asphalt	$ 92.00	$ 920.00	$ 75.00	$ 750.00
685	10	SY	Replace Non-City Street Pavement with Laydown Machine, Recycled Asphalt	$ 92.00	$ 920.00	$ 75.00	$ 750.00
690	1	SY	Replace Non-City Street Pavement with Temporary Cold Mix	$ 167.56	$ 167.56	$ 75.00	$ 75.00
695	10	SY	Replace Concrete Pavement	$ 261.50	$ 2,615.00	$ 275.00	$ 2,750.00
700	50	LF	Replace Concrete Curb & Gutter	$ 45.00	$ 2,250.00	$ 45.00	$ 2,250.00
705	10	SY	Replace Concrete Sidewalk	$ 155.00	$ 1,550.00	$ 170.00	$ 1,700.00
710	10	CY	Replace Gravel Surface, 0"-2"	$ 56.00	$ 560.00	$ 85.00	$ 850.00
715	10	CY	Replace Gravel Surface, 2"-4"	$ 66.00	$ 660.00	$ 120.00	$ 1,200.00
720	150	SY	Base course/Gravel (crushed or landscape), 0"-3"	$ 34.00	$ 5,100.00	$ 35.00	$ 5,250.00
725	50	SY	Base course/Gravel (crushed or landscape), 3"-6"	$ 45.00	$ 2,250.00	$ 45.00	$ 2,250.00
730	4	EA	Service, 3/4" Single, New Main	$ 1,262.50	$ 5,050.00	$ 1,475.00	$ 5,900.00
735	2	EA	Service, 3/4" Double, New Main	$ 1,662.50	$ 3,325.00	$ 1,775.00	$ 3,550.00
740	2	EA	Service, 1", New Main	$ 1,887.50	$ 3,775.00	$ 1,825.00	$ 3,650.00
745	1	EA	Service, 1 1/2", New Main	$ 3,670.00	$ 3,670.00	$ 3,450.00	$ 3,450.00
750	1	EA	Service, 2", New Main	$ 3,985.00	$ 3,985.00	$ 3,870.00	$ 3,870.00
755	5	EA	Service, 3/4" Single, Existing Main	$ 1,450.00	$ 7,250.00	$ 1,475.00	$ 7,375.00
760	2	EA	Service, 3/4" Double, Existing Main	$ 1,912.50	$ 3,825.00	$ 1,775.00	$ 3,550.00
765	1	EA	Service, 1", Existing Main	$ 1,900.00	$ 1,900.00	$ 1,825.00	$ 1,825.00
770	1	EA	Service, 1 1/2", Existing Main	$ 3,670.00	$ 3,670.00	$ 3,450.00	$ 3,450.00
775	1	EA	Service, 2", Existing Main	$ 4,300.00	$ 4,300.00	$ 3,870.00	$ 3,870.00
780	5	EA	Service Replacement, 3/4"	$ 1,602.50	$ 8,012.50	$ 1,475.00	$ 7,375.00
785	2	EA	Service Replacement, Double, 3/4"	$ 1,950.00	$ 3,900.00	$ 1,775.00	$ 3,550.00
790	1	EA	Service Replacement, 1"	$ 2,100.00	$ 2,100.00	$ 1,825.00	$ 1,825.00

				AAC		Sub Surface	
Bid Item	Approx. QTY.	Unit	Article and Description	Unit Price	Item Price	Unit Price	Item Price
795	1	EA	Service Replacement, 1 1/2"	$ 3,875.00	$ 3,875.00	$ 3,450.00	$ 3,450.00
800	1	EA	Service Replacement, 2"	$ 4,512.00	$ 4,512.00	$ 3,870.00	$ 3,870.00
805	3	EA	Meter Box Relocation/Replacement, 3/4"	$ 1,000.00	$ 3,000.00	$ 895.00	$ 2,685.00
810	1	EA	Meter Box Relocation/Replacement, 1"	$ 1,150.00	$ 1,150.00	$ 915.00	$ 915.00
815	1	EA	Meter Box Relocation/Replacement, 1-1/2"	$ 1,800.00	$ 1,800.00	$ 1,400.00	$ 1,400.00
820	1	EA	Meter Box Relocation/Replacement, 2"	$ 1,900.00	$ 1,900.00	$ 1,400.00	$ 1,400.00
825	5	EA	Service Transfer, 3/4"	$ 812.50	$ 4,062.50	$ 725.00	$ 3,625.00
830	2	EA	Service Transfer, 1"	$ 912.50	$ 1,825.00	$ 825.00	$ 1,650.00
835	1	EA	Service Transfer, 1 1/2"	$ 1,112.50	$ 1,112.50	$ 925.00	$ 925.00
840	1	EA	Service Transfer at Main, 2"	$ 1,325.00	$ 1,325.00	$ 975.00	$ 975.00
845	1	EA	Retire Existing Service at Main, 3/4"- 2"	$ 962.50	$ 962.50	$ 725.00	$ 725.00
850	1	EA	Retire Existing Meter Box & Setting	$ 437.50	$ 437.50	$ 525.00	$ 525.00
855	1	EA	Adjust Meter Box To Grade	$ 412.50	$ 412.50	$ 425.00	$ 425.00
860	11	EA	Service Saddle, 3/4" Tap, 4"-12" Main	$ 500.00	$ 5,500.00	$ 650.00	$ 7,150.00
865	4	EA	Service Saddle, 1" Tap, 4"-12" Main	$ 462.50	$ 1,850.00	$ 675.00	$ 2,700.00
870	3	EA	Service Saddle, 1 1/2" Tap, 4"-12" Main	$ 562.50	$ 1,687.50	$ 750.00	$ 2,250.00
875	3	EA	Service Saddle, 2" Tap, 4"-12" Main	$ 650.00	$ 1,950.00	$ 775.00	$ 2,325.00
880	100	LF	Service Tubing, 3/4"	$ 28.75	$ 2,875.00	$ 31.50	$ 3,150.00
885	100	LF	Service Tubing, 1"	$ 34.12	$ 3,412.00	$ 33.75	$ 3,375.00
890	100	LF	Service Tubing, 1 1/2"	$ 46.50	$ 4,650.00	$ 44.00	$ 4,400.00
895	25	LF	Service Tubing, 2"	$ 65.50	$ 1,637.50	$ 53.00	$ 1,325.00
900	1	EA	Air and Vacuum Valve (individual)	$ 450.00	$ 450.00	$ 1,550.00	$ 1,550.00
905	1	GROUP OF 10	Air and Vacuum Valves	$ 8,045.00	$ 8,045.00	$ 15,500.00	$ 15,500.00
910	1	EA	Automatic Flushing Valve	$ 5,867.50	$ 5,867.50	$ 4,350.00	$ 4,350.00
915	$20,000	%	Materials Mark-Up Over Invoice	$ 3,600.00	$ 3,600.00	$ 1,500.00	$ 1,500.00
920	$8,000	%	Traffic Control Mark-Up Over Invoice	$ 1,440.00	$ 1,440.00	$ 1,200.00	$ 1,200.00
925	1	Allow.	Street-Cut Permits	$ 175.00	$ 175.00	$ 375.00	$ 375.00
930	1	EA	Project Signs	$ 675.00	$ 675.00	$ 450.00	$ 450.00
935	10	HR	Archeological Required Delay (after 2 hrs)	$ 250.00	$ 2,500.00	$ 185.00	$ 1,850.00
940	1	LS	Archeological Required Mob/Demob	$ 725.00	$ 725.00	$ 700.00	$ 700.00
EMERGENCY REPAIR					$ -		$ -
9000	175	HR	Supervisor's Truck with tools	$ 35.00	$ 6,125.00	$ 30.00	$ 5,250.00
9100	80	HR	Backhoe/Skid Steer	$ 57.00	$ 4,560.00	$ 58.00	$ 4,640.00
9200	8	HR	Compressor with tools	$ 54.00	$ 432.00	$ 35.00	$ 280.00
9300	16	HR	Dump Truck	$ 65.00	$ 1,040.00	$ 60.00	$ 960.00
9400	4	HR	Pump	$ 25.00	$ 100.00	$ 15.00	$ 60.00
9500	300	HR	Laborer	$ 42.50	$ 12,750.00	$ 43.00	$ 12,900.00
9600	200	HR	Pipe Fitter	$ 44.50	$ 8,900.00	$ 45.00	$ 9,000.00
9700	200	HR	Equipment Operator	$ 57.50	$ 11,500.00	$ 58.00	$ 11,600.00
9800	175	HR	Foreman	$ 59.50	$ 10,412.50	$ 60.00	$ 10,500.00
9900	$5,000	%	Rental Items Mark-Up Over Invoice (multiply $5,000 x your % for Item Price)	$ 1,000.00	$ 1,000.00	$ 900.00	$ 900.00
9950	$20,000	%	Materials Mark-Up Over Invoice (multiply $20,000 x your % for Item Price)	$ 3,600.00	$ 3,600.00	$ 1,500.00	$ 1,500.00

of the Contractor are in addition to his obligations under Paragraph 4.18.

10.2.6 The Contractor shall designate a responsible member of his organization at the site whose duty shall be the prevention of accidents. This person shall be the Contractor's Superintendent unless otherwise designated by the Contractor in writing to the City of Santa Fe and the City of Santa Fe's Representative.

10.2.7 The Contractor shall not load or permit any part of the work to be loaded so as to endanger its safety.

10.3 EMERGENCIES

10.3.1 In any emergency affecting the safety of persons or property, the Contractor shall act, at his reasonable discretion, to prevent threatened damage, injury or loss. Any additional compensation or extension of time claimed by the Contractor on account of emergency work shall be determined as provided in Article 12 for changes in the work.

ARTICLE 11

INSURANCE

11.1 CONTRACTOR'S LIABILITY INSURANCE

11.1.1. The Contractor shall carry insurance to protect the City of Santa Fe from and against all claims, demands, actions, judgments, costs, expenses and liabilities which may arise or result directly or indirectly from or by reasons of loss, injury or damage related to the Project. The Contractor shall file with the City of Santa Fe current certificates evidencing public liability insurance with limits as provided in the New Mexico Tort Claims Act, Section 41-4-19 NMSA 1978, and as that section or successors section may be amended from time to time. The contractor shall also carry such insurance as it deems necessary to protect it from all claims under any workmen's compensation law in effect that may be applicable to the Contractor. All insurance required by this Agreement shall be kept and remain in full force and effect for the entire life of this Agreement.

11.1.2. The insurance coverage shall include worker's compensation, employer's liability, comprehensive general liability (Premises-Operations, independent contractors, products and completed operations, broad form property damage, contractual liability, explosion and collapse hazard, underground Hazard, personal injury) comprehensive automobile liability (owned and hired), excess liability (umbrella form), and all-risk builder's risk.

11.1.3. All insurance coverage must be maintained for the entire life of the Project. Products and completed operations coverage shall be maintained for a minimum period of one (1) year after final payment.

11.1.4. A valid certificate of insurance must be submitted to the City of Santa Fe prior to issuance of a Notice-to-Proceed.

Type of Required Coverage	Minimum Limits of Liability
Workman's compensation (including accident and occupational disease coverage)	Statutory
Employer's Liability	$100,000
Comprehensive General Liability (including endorsements providing broad form property damage coverage, personal injury coverage, and contractual assumption of liability coverage for all liability the Contractor has assumed under his Contract).	Bodily injury liability: $500,000 each occurrence; $1,000,000 aggregate. Property damage liability: $500,000 each occurrence; $1,000,000 aggregate.
Auto Liability (including non-owned auto coverage)	Bodily injury liability: $500,000 each person; $1,000,000 each occurrence. Property damage liability: $1,000,000 each occurrence

11.1.5 Certificates of Insurance acceptable to the City of Santa Fe shall be filed with the City of Santa Fe prior to

commencement of the work. These Certificates shall contain a provision that coverage afforded under the policies will not be canceled until at least thirty days' prior written notice has been given to the City of Santa Fe. The Contractor shall furnish one (1) copy of each of the Certificates of insurance herein required for each copy of the Contract.

11.2 CITY OF SANTA FE'S LIABILITY INSURANCE

11.2.1 The City of Santa Fe shall be responsible for purchasing and maintaining his own liability insurance and, at his option, may purchase and maintain such insurance as will protect him against all claims which may arise from operations under the Contract.

11.3 PROPERTY INSURANCE

11.3.1 The Contractor shall maintain traditional course of construction insurance upon the work at the site for at least the actual cash value thereof. The traditional course of construction insurance shall cover the interests of the City of Santa Fe, the Contractor, Subcontractors, and Sub-subcontractors in the work. The insurance shall insure against at least the following perils: fire extended coverage, vandalism, malicious mischief, and flood insurance with a deductible of no more than $25,000. The Contractor shall bear the cost of such insurance and include its cost in the Bid.

11.3.2 Any loss insured under Subparagraph 11.3.1 is to be adjusted with the City of Santa Fe and made payable to the City of Santa Fe as trustee for the insured, as their interests may appear subject to the requirements of any applicable mortgage clause. The City of Santa Fe shall deposit the proceeds in a separate account and shall distribute them in accordance with such agreement as the parties in interest, including the City of Santa Fe, may reach. The Contractor shall pay each Subcontractor a just share of any insurance proceeds which the Contractor receives and shall require by written agreement signed by the Subcontractor that the Subcontractor will make payments to his Sub-subcontractors in a similar manner. If after such loss no other special agreement is made, replacement of damaged work shall be covered by an appropriate order.

11.3.3 To the extent permitted under their respective property insurance policies, the City of Santa Fe and the Contractor hereby waive all rights, each against the other, for damages caused by fire or other perils to the extent covered by Insurance obtained pursuant to this Article 11 or any other property insurance applicable to the work, except such rights as they may have to the proceeds of such Insurance held by the City of Santa Fe as trustee. The City of Santa Fe or the Contractor, as appropriate, shall require the City of Santa Fe's Representative, other Contractors, Subcontractors, and Sub-subcontractors to similarly waive rights of subrogation or property insurers.

11.3.4 If the City of Santa Fe finds it necessary to occupy use of any portion of the work prior to Substantial Completion, such occupancy or use shall not commence prior to the time mutually agreed to by the City of Santa Fe and the Contractor and, if required by the applicable insurance or self-insurance coverage not prior to the time the builder's risk property insurer has consented to such occupancy or use. The Contractor's consent to such occupancy or use shall not be unreasonably withheld.

11.4 LOSS OF USE INSURANCE

11.4.1 The City of Santa Fe, at his option, may purchase and maintain such insurance as will insure him against loss of use of his property due to fire or other hazards, however caused.

Item#_____
Munis Contract#3202927
Original Contract Item#21-0483
CIP #3058

CITY OF SANTA FE
AMENDMENT No. 2 TO
The Priority Line Replacement Price Agreement
ITEM#21-0483

This AMENDMENT No. 2 (the "Amendment") amends the CITY OF SANTA FE Agreement, dated September 10, 2021 (the "Agreement"), between the City of Santa Fe and A.A.C. Construction, LLC. The date of this Amendment shall be the date when it is executed by the City and the Contractor whichever occurs last.

RECITALS:

A. Under the terms of the Contract, Contractor has agreed to provide the Priority Line Replacement for the City of Santa Fe.

B. Pursuant to Article 14 of the Contract, and for good and valuable consideration, the receipt and sufficiency of which are acknowledged by the parties, the City and the Contractor agree as follows:

1. COMPENSATION.

Article 2, paragraph A of the Contract is amended to increase the amount of compensation by a total of one million, five hundred and eighty-one thousand, eight hundred and seventy five dollars ($1,581,875.00) so that Article 2, paragraph A reads in its entirety as follows:

A. The City shall pay to the Contractor in full payment for services satisfactorily performed at total amount up to five million, forty-one thousand, eight hundred and seventy-five dollars and thirty cents ($ $4,944,612.75). The New Mexico gross receipts tax levied on the amounts payable under this Agreement totaling four hundred ninety three thousand six hundred fifteen dollars and fifty-two cents ($493,615.52) shall be paid by the

City to the Contractor as described in Exhibit A attached hereto. **The total amount payable to the Contractor under this Agreement, including gross receipts tax and expenses, shall not exceed five million four hundred thirty eight thousand two hundred twenty eight dollars and twenty seven cents ($ $5,438,228.27). This amount is a maximum and not a guarantee that the work assigned to be performed by the Contractor under this Agreement shall equal the amount stated herein. The parties do not intend for the Contractor to continue to provide services without compensation when the total compensation amount is reached. Contractor is responsible for notifying the City when the services provided under this Agreement reach the total compensation amount. In no event will the Contractor be paid for services provided in excess of the total compensation amount without this Agreement being amended in writing prior to those services in excess of the total compensation amount being provided.**

2. CONTRACT IN FULL FORCE.

Except as specifically provided in this Amendment, the Contract remains and shall remain in full force and effect, in accordance with its terms.

IN WITNESS WHEREOF, the parties have executed this Amendment No. 2 to the Contract as of the dates set forth below.

CITY OF SANTA FE:

_____
ALAN WEBBER, MAYOR

DATE:_____

CONTRACTOR:
A.A.C. Construction, LLC

Andrew Sisneros (Oct 26, 2024 06:24 MDT)
ANDREW SISNEROS, OWNER

DATE: Oct 26, 2024

CRS# 03-157349-00-5

Registration #19-00127501

ATTEST:

_____
GERALYN CARDENAS, INTERIM CITY CLERK

CITY ATTORNEY'S OFFICE:

Marcos Martinez
Marcos Martinez (Oct 28, 2024 08:09 MDT)
SENIOR ASSISTANT CITY ATTORNEY

APPROVED FOR FINANCES:

_____
FINANCE DIRECTOR

GB AAC Contract Amendment 2 Munis Contract 3202927

Final Audit Report 2024-10-30

Created:	2024-10-30
By:	JAMES EDWARDS (jwedwards@santafenm.gov)
Status:	Canceled / Declined
Transaction ID:	CBJCHBCAABAALv-Wzon7KgiZ0So4eLlxvqVndD96XpIh

"GB AAC Contract Amendment 2 Munis Contract 3202927" History

Document created by JAMES EDWARDS (jwedwards@santafenm.gov)
2024-10-30 - 7:41:09 PM GMT- IP address: 63.232.20.2

Document emailed to ajhopkins@santafenm.gov ajhopkins@santafenm.gov (ajhopkins@santafenm.gov) for signature
2024-10-30 - 7:50:00 PM GMT

Email viewed by ajhopkins@santafenm.gov ajhopkins@santafenm.gov (ajhopkins@santafenm.gov)
2024-10-30 - 7:54:01 PM GMT- IP address: 104.47.65.254

Document declined by ajhopkins@santafenm.gov ajhopkins@santafenm.gov (ajhopkins@santafenm.gov)
Decline reason: BAR requires Dept Director signature before it comes to Budget.
2024-10-30 - 7:55:05 PM GMT- IP address: 63.232.20.2

Powered by Adobe Acrobat Sign

GB AAC Contract Amendment 2 Munis Contract 3202927 (1)

Interim Agreement Report 2024-11-01

Created:	2024-10-31
By:	JAMES EDWARDS (jwedwards@santafenm.gov)
Status:	Out for Signature
Transaction ID:	CBJCHBCAABAAZp8GD-HBWbp0KNlfU5kKAB9ijyTu0WlH

Agreement History

Agreement history is the list of the events that have impacted the status of the agreement prior to the final signature. A final audit report will be generated when the agreement is complete.

"GB AAC Contract Amendment 2 Munis Contract 3202927 (1)" History

Document created by JAMES EDWARDS (jwedwards@santafenm.gov)
2024-10-31 - 8:52:49 PM GMT- IP address: 75.233.144.205

Document emailed to John Dupuis (jedupuis@santafenm.gov) for signature
2024-10-31 - 8:57:26 PM GMT

Document e-signed by John Dupuis (jedupuis@santafenm.gov)
Signature Date: 2024-10-31 - 9:27:29 PM GMT - Time Source: server- IP address: 174.218.18.173

Document emailed to Jesse Roach (jdroach@santafenm.gov) for signature
2024-10-31 - 9:27:35 PM GMT

Email viewed by Jesse Roach (jdroach@santafenm.gov)
2024-10-31 - 9:33:35 PM GMT- IP address: 104.47.65.254

Document e-signed by Jesse Roach (jdroach@santafenm.gov)
Signature Date: 2024-10-31 - 9:34:16 PM GMT - Time Source: server- IP address: 63.232.20.2

Document emailed to ajhopkins@santafenm.gov ajhopkins@santafenm.gov (ajhopkins@santafenm.gov) for signature
2024-10-31 - 9:34:24 PM GMT

Email viewed by ajhopkins@santafenm.gov ajhopkins@santafenm.gov (ajhopkins@santafenm.gov)
2024-10-31 - 11:23:17 PM GMT- IP address: 104.47.65.254

Powered by Adobe Acrobat Sign

Document e-signed by ajhopkins@santafenm.gov ajhopkins@santafenm.gov (ajhopkins@santafenm.gov)

Signature Date: 2024-10-31 - 11:23:53 PM GMT - Time Source: server- IP address: 63.232.20.2

Document sent to JoAnn Lovato (jdlovato@santafenm.gov) and Travis Dutton-Leyda (tkduttonleyda@santafenm.gov) for signature. One of them to sign

2024-10-31 - 11:24:00 PM GMT

Email viewed by Travis Dutton-Leyda (tkduttonleyda@santafenm.gov)

2024-11-01 - 5:53:25 AM GMT- IP address: 104.28.48.213

Email viewed by JoAnn Lovato (jdlovato@santafenm.gov)

2024-11-01 - 4:13:35 PM GMT- IP address: 63.232.20.2

City of Santa Fe, New Mexico

memo

Date: October 29, 2024

To: Public Works and Utilities Committee / Finance Committee / City Council

Via: John Dupuis, Public Utilities Department Director John Dupuis (Oct 29, 2024 15:26 MDT)
Jesse D. Roach, Water Division Director

From: Michael R. Moya, Transmission & Distribution Section Manager
Bill Huey, Water Division Engineer

Subject: Request approval of Amendment No. 2 to Price Agreement Item # 23-0182 with Sub Surface Contracting, Inc. (Sub Surface) to Increase Maximum Compensation by $1,656,806.25 for a New Total Contract Amount of $6,696,806.25 including NMGRT) (Bill Huey, Engineer, bchuey@santafenm.gov).

Vendor Name: Sub Surface Contracting, Inc.

Vendor Number: 1921

Contract Number: 3202929

ITEM AND ISSUE:

The Public Utilities Department, Water Division requests approval of Amendment No. 2 to Price Agreement Item # 23-0182 with Sub Surface Contracting, Inc. (Sub Surface) to Increase Maximum Compensation by $1,656,806.25 for a New Total Contract Amount of $6,696,806.25 including NMGRT with No Corresponding Change to the Term of the Agreement. (Bill Huey, Engineer, bchuey@santafenm.gov).

ACTION REQUESTED:

Approval of Amendment No. 2 to Price Agreement #23-0182

BACKGROUND AND SUMMARY:

In July 2021, City Council awarded bid number '21/43/B for the Priority Line Replacement Price Agreement, CIP # 3058 to both Sub Surface Contracting and A.A.C. Construction LLC for four (4) Fiscal Years, FY 2021-22 until FY2024-25 at the initial funding amount of $3,500,000 inclusive of NMGRT. Future funding was dependent upon the availability of CIP funds.

The Priority Line Replacement Price Agreement is an on-call requirements contract, with the Water Division issuing work orders as needed for work such as water line replacements. The contract is funded from CIP for Transmission and Distribution to work on their infrastructure.

Due to Supply Chain delays, $467,000.00 in orders from Sub Surface on the previous contract were delayed until after this contract was in effect and were paid under this contract. Another change Order had been drafted to handle this expense and was assumed to have been handled in the past, but never made it onto the official contract. Current contract possible funding for Sub Surface is limited to $29,713.52 without approval of Amendment #2.

The Water Division historically planned to upgrade pressure reducing valve vaults but has not done so in the last few years. We request adding a total of $1,000,000 to this contract, $500,000.00 for each contractor to begin this upgrade program again.

The Water Division is requesting approval of $1,656,806.25 (including NMGRT) additional funding to allow for this Fiscal Year's work to be conducted.

PROCUREMENT METHOD:

ITB/PA No. '21/43/B FY 21/22 Priority Line Replacement Price Agreement, CIP # 3058 approved by City Council on 7/28/2021.

Chief Procurement Officer Approval: _____ **Date:** _____
Comment/Exceptions: _____

Supporting Information:

CONTRACT NUMBER:
The FY25 Munis contract number for Sub Surface is 3202929
The FY25 Project ledger number for Priority Line Replacements is WTRR2550521

$$$$$ SOURCE/REVENUE: ☒Expense ☐Revenue

The funding source is:
Fund Name/Number: Water Enterprise Fund/Fund 500
Munis Org Name/Number: Water CIP/5050395
Munis Object Name/Number: WIP Construction/572970

If the project is grant funded? List grant award number*:* _____

Grant Manager / Accounting Officer Approval: _____ **Date:** _____
Comment/Exceptions: _____

Project Ledger #: _____

Budget Officer Approval: Andy Hopkins **Date:** Oct 31, 2024
Comment/Exceptions: _____

CAPITAL ASSET (will this procurement result in a tangible item that costs more than $5,000?):

☒Yes | ☐ No

 # (if known): _____

Repair or Replacement of Existing Equipment:

☒Yes | ☐ No
If yes -> ☒Repair | ☒ Replacement

Please explain: Contract is used to repair main water line breaks and to replace smaller sections of main water lines.

Capital Project:
(New and improvement projects that are going to cost $10,000 or more)
☒ Yes | ☐ No

Project Ledger #: _____

Anticipated length of project: To be determined _____

Asset Manager Approval: _____ **Date:** _____
Comment/Exceptions: _____

Department Approvals:
IT Components: ☐ **Yes | ☒ No**
Vehicles: ☐ **Yes | ☒ No**
Facilities, Furniture, Fixtures, Equipment: ☐ **Yes | ☒ No**

Approval: _____ **Title:** _____ **Date**: _____
Approval: _____ **Title:** _____ **Date**: _____
Comment & Exceptions: _____

Department Contract Administrator Contact Info:
Gina Wolff
vawolff@santafenm.gov

ATTACHMENTS:
Contract 3202929 Amendment No. 2
Budget Adjustment Request (BAR)

cc:

Log # *{Finance use only}*:	
Journal # *{Finance use only}*:	

City of Santa Fe, New Mexico
BUDGET AMENDMENT RESOLUTION (BAR)

DEPARTMENT / DIVISION NAME	DATE
Public Utilities Department / Water Division	10/28/2024

ITEM DESCRIPTION	ORG	OBJECT	PROJECT	INCREASE	DECREASE
EXPENDITURES				*{enter as positive #}*	*{enter as negative #}*
Water Cap Proj, WIP Construction	5050395	572970	WTR2550521	1,656,807	
REVENUES				*{enter as negative #}*	*{enter as positive #}*
JUSTIFICATION: *(use additional page if needed)* *--Attach supporting documentation/memo*				$ 1,656,807	$ -

Please see attached Memo.

Contract (3202929) with Sub Surface Contracting Inc for priority line repairs Amendment No. 2

{Complete section below if BAR results in a net change to ANY Fund}	
Fund(s) Affected	Fund Balance Increase/(Decrease)
505	(1,656,807)
TOTAL:	**(1,656,807)**

Jonna Leigh Stack for Bill Huey — 10/28/2024
Prepared By *{print name}* — Date

Oct 31, 2024
Division Director Signature *{optional}* — Date

John Dupuis (Oct 31, 2024 15:26 MDT) Oct 31, 2024
Department Director Signature, John Dupuis — Date

{Use this form for Finance Committee/ City Council agenda items ONLY}

CITY COUNCIL APPROVAL

City Council Approval Date

Agenda Item #:

Andy Hopkins — Oct 31, 2024
Budget Officer — Date

Finance Director *{≤ $5,000}* — Date

City Manager *{≤ $60,000}* — Date

ACORD

CERTIFICATE OF LIABILITY INSURANCE

DATE (MM/DD/YYYY) 7/19/2024

THIS CERTIFICATE IS ISSUED AS A MATTER OF INFORMATION ONLY AND CONFERS NO RIGHTS UPON THE CERTIFICATE HOLDER. THIS CERTIFICATE DOES NOT AFFIRMATIVELY OR NEGATIVELY AMEND, EXTEND OR ALTER THE COVERAGE AFFORDED BY THE POLICIES BELOW. THIS CERTIFICATE OF INSURANCE DOES NOT CONSTITUTE A CONTRACT BETWEEN THE ISSUING INSURER(S), AUTHORIZED REPRESENTATIVE OR PRODUCER, AND THE CERTIFICATE HOLDER.

IMPORTANT: If the certificate holder is an ADDITIONAL INSURED, the policy(ies) must have ADDITIONAL INSURED provisions or be endorsed. If SUBROGATION IS WAIVED, subject to the terms and conditions of the policy, certain policies may require an endorsement. A statement on this certificate does not confer rights to the certificate holder in lieu of such endorsement(s).

PRODUCER License # 0757776
HUB International Insurance Services (SOW)
2905 Rodeo Park Drive East
Building 6, Suite 100
Santa Fe, NM 87505

CONTACT NAME: Michelle Vialpando
PHONE (A/C, No, Ext): (505) 992-1873 FAX (A/C, No): (866) 487-3972
E-MAIL ADDRESS: michelle.vialpando@hubinternational.com

INSURER(S) AFFORDING COVERAGE	NAIC #
INSURER A : ACUITY, A Mutual Insurance Company	14184
INSURER B : Builders Trust of New Mexico	
INSURER C :	
INSURER D :	
INSURER E :	
INSURER F :	

INSURED
Sub Surface Contracting Inc
27A Paseo De River St
Santa Fe, NM 87507

COVERAGES **CERTIFICATE NUMBER:** **REVISION NUMBER:**

THIS IS TO CERTIFY THAT THE POLICIES OF INSURANCE LISTED BELOW HAVE BEEN ISSUED TO THE INSURED NAMED ABOVE FOR THE POLICY PERIOD INDICATED. NOTWITHSTANDING ANY REQUIREMENT, TERM OR CONDITION OF ANY CONTRACT OR OTHER DOCUMENT WITH RESPECT TO WHICH THIS CERTIFICATE MAY BE ISSUED OR MAY PERTAIN, THE INSURANCE AFFORDED BY THE POLICIES DESCRIBED HEREIN IS SUBJECT TO ALL THE TERMS, EXCLUSIONS AND CONDITIONS OF SUCH POLICIES. LIMITS SHOWN MAY HAVE BEEN REDUCED BY PAID CLAIMS.

INSR LTR	TYPE OF INSURANCE	ADDL INSD	SUBR WVD	POLICY NUMBER	POLICY EFF (MM/DD/YYYY)	POLICY EXP (MM/DD/YYYY)	LIMITS	
A	X COMMERCIAL GENERAL LIABILITY						EACH OCCURRENCE	$ 1,000,000
	CLAIMS-MADE X OCCUR	X		Z75944	7/1/2024	7/1/2025	DAMAGE TO RENTED PREMISES (Ea occurrence)	$ 250,000
	X PD Ded: $500						MED EXP (Any one person)	$ 10,000
							PERSONAL & ADV INJURY	$ 1,000,000
	GEN'L AGGREGATE LIMIT APPLIES PER:						GENERAL AGGREGATE	$ 3,000,000
	POLICY X PRO-JECT LOC						PRODUCTS - COMP/OP AGG	$ 3,000,000
	OTHER:							$
A	AUTOMOBILE LIABILITY						COMBINED SINGLE LIMIT (Ea accident)	$ 1,000,000
	X ANY AUTO			Z75944	7/1/2024	7/1/2025	BODILY INJURY (Per person)	$
	OWNED AUTOS ONLY / SCHEDULED AUTOS						BODILY INJURY (Per accident)	$
	X HIRED AUTOS ONLY / X NON-OWNED AUTOS ONLY						PROPERTY DAMAGE (Per accident)	$
								$
A	UMBRELLA LIAB X OCCUR						EACH OCCURRENCE	$ 2,000,000
	X EXCESS LIAB CLAIMS-MADE			Z75944	7/1/2024	7/1/2025	AGGREGATE	$ 2,000,000
	DED X RETENTION $ 0							$
B	WORKERS COMPENSATION AND EMPLOYERS' LIABILITY Y / N						X PER STATUTE / OTH-ER	
	ANY PROPRIETOR/PARTNER/EXECUTIVE OFFICER/MEMBER EXCLUDED? (Mandatory in NH) Y	N / A		0692	1/1/2024	1/1/2025	E.L. EACH ACCIDENT	$ 2,000,000
	If yes, describe under DESCRIPTION OF OPERATIONS below						E.L. DISEASE - EA EMPLOYEE	$ 2,000,000
							E.L. DISEASE - POLICY LIMIT	$ 2,000,000
A	Leased/Rented Eqpt			Z75944	7/1/2024	7/1/2025	Ded: $500 / Limit:	200,000

DESCRIPTION OF OPERATIONS / LOCATIONS / VEHICLES (ACORD 101, Additional Remarks Schedule, may be attached if more space is required)

.

SEE ATTACHED ACORD 101

CERTIFICATE HOLDER

City of Santa Fe
Wastewater Division
Attn: Stan Holland
73 Paseo Real
Santa Fe, NM 87507

CANCELLATION

SHOULD ANY OF THE ABOVE DESCRIBED POLICIES BE CANCELLED BEFORE THE EXPIRATION DATE THEREOF, NOTICE WILL BE DELIVERED IN ACCORDANCE WITH THE POLICY PROVISIONS.

AUTHORIZED REPRESENTATIVE

© 1988-2015 ACORD CORPORATION. All rights reserved.
The ACORD name and logo are registered marks of ACORD

ADDITIONAL REMARKS SCHEDULE

AGENCY	License # 0757776	NAMED INSURED
HUB International Insurance Services (SOW)		Sub Surface Contracting Inc 27A Paseo De River St Santa Fe, NM 87507
POLICY NUMBER		
SEE PAGE 1		
CARRIER	NAIC CODE	EFFECTIVE DATE: SEE PAGE 1
SEE PAGE 1	SEE P 1	

ADDITIONAL REMARKS

THIS ADDITIONAL REMARKS FORM IS A SCHEDULE TO ACORD FORM,

FORM NUMBER: ACORD 25 FORM TITLE: Certificate of Liability Insurance

Description of Operations/Locations/Vehicles:
Where required by written contract or agreement, the City of Santa Fe, Wastewater Division, City Representative, other parties reasonably requested in writing by the City of Santa Fe, and their officials, members, officers, employees, and agents are included as additional insured with respects to general liability, on a primary & non-contributory basis.

© 2008 ACORD CORPORATION. All rights reserved.
The ACORD name and logo are registered marks of ACORD

ADDITIONAL INSURED - OWNERS, LESSEES OR CONTRACTORS - AUTOMATIC STATUS WHEN REQUIRED IN CONSTRUCTION AGREEMENT WITH YOU **CG-2033R(6-13)**

This endorsement modifies insurance provided under the following:

COMMERCIAL GENERAL LIABILITY COVERAGE PART

1. Section II - Who Is An Insured is amended to include as an additional insured:

a. Any person or organization for whom you are performing operations when you and such person or organization have agreed in writing in a contract or agreement that such person or organization be added as an additional insured on your policy; and

b. Any other person or organization you are required to add as an additional insured under the contract or agreement described in paragraph a above.

Such person or organization is an additional insured only with respect to liability for *bodily injury, property damage* or *personal and advertising injury* caused, in whole or in part, by:

a. Your acts or omissions; or

b. The acts or omissions of those acting on your behalf;

in the performance of your ongoing operations for the additional insured.

However the insurance afforded to such additional insured:

a. Only applies to the extent permitted by law; and

b. Will not be broader than that which you are required by the contract or agreement to provide for such additional insured.

A person's or organization's status as an additional insured under this endorsement ends when your operations for that additional insured are completed.

2. With respect to the insurance afforded these additional insureds, the following additional exclusions apply:

This insurance does not apply to:

a. *Bodily injury, property damage* or *personal and advertising injury* arising out of the rendering of, or the failure to render, any professional architectural, engineering or surveying services, including:

(1) The preparing, approving or failing to prepare or approve maps, shop drawings, opinions, reports, surveys, field orders, change orders or drawings and specifications; or

(2) Supervisory, inspection, architectural or engineering activities.

This exclusion applies even if the claims against any insured allege negligence or other wrongdoing in the supervision, hiring, employment, training or monitoring of others by that insured, if the *occurrence* which caused the *bodily injury* or *property damage* involved the rendering of or the failure to render any professional architectural, engineering or surveying services.

b. *Bodily injury* or *property damage* occurring after:

(1) All work, including materials, parts or equipment furnished in connection with such work, on the project (other than service, maintenance or repairs) to be performed by or on behalf of the additional insured(s) at the location of the covered operations has been completed; or

(2) That portion of *your work* out of which the injury or damage arises has been put to its intended use by any person or organization other than another contractor or subcontractor engaged in performing operations for a principal as a part of the same project.

3. With respect to the insurance afforded to these additional insureds, the following is added to Section III - Limits Of Insurance:

The most we will pay on behalf of the additional insured is the amount of insurance:

a. Required by the contract or agreement you have entered into with the additional insured; or

b. Available under the applicable Limits of Insurance shown in the Declarations;

whichever is less.

This endorsement shall not increase the applicable Limits of Insurance shown in the Declarations.

ADDITIONAL INSURED - COMPLETED OPERATIONS AUTOMATIC STATUS WHEN REQUIRED IN CONSTRUCTION AGREEMENT WITH YOU (OWNERS, LESSEES OR CONTRACTORS) **CG-7277(6-13)**

This endorsement modifies insurance provided under the following:

COMMERCIAL GENERAL LIABILITY COVERAGE PART

PRODUCTS-COMPLETED OPERATIONS LIABILITY COVERAGE FORM

1. Section II - Who Is An Insured is amended to include as an additional insured:

a. Any person(s) or organization(s) for whom you have performed operations if you and such person(s) or organization(s) have agreed in writing in a contract or agreement that such person(s) or organization(s) be added as additional insured on your policy for completed operations; and

b. Any other person(s) or organization(s) you are required to add as an additional insured under the contract or agreement described in paragraph a above.

Such person or organization is an additional insured only with respect to liability included in the *products-completed operations hazard* for *bodily injury* or *property damage* caused, in whole or in part, by *your work* performed for that additional insured at the location designated and described in the contract or agreement.

However:

a. The insurance afforded to such additional insured only applies to the extent permitted by law; and

b. If coverage provided to the additional insured is required by a contract or agreement, the insurance afforded to such additional insured will not be broader than that which you are required by the contract or agreement to provide for such additional insured.

2. This insurance does not apply to:

a. *Bodily injury* or *property damage* which occurs prior to the execution of the contract or agreement described in item 1; or

b. *Bodily injury* or *property damage* that occurs after the time period during which the contract or agreement described in item 1 requires you to add such person or organization onto your policy as an additional insured for completed operations; or

c. *Bodily injury* or *property damage* arising out of the rendering of, or the failure to render, any professional, architectural, engineering or surveying services, including:

(1) The preparing, approving or failing to prepare or approve maps, shop drawings, opinions, reports, surveys, field orders, change orders or drawings and specifications; or

(2) Supervisory, inspection, architectural or engineering activities.

This exclusion applies even if the claims against any insured allege negligence or other wrongdoing in the supervision, hiring, employment, training or monitoring of others by that insured, if the *occurrence* which caused the *bodily injury* or *property damage* involved the rendering of or the failure to render any professional services by or for you.

3. With respect to the insurance afforded to these additional insureds, the following is added to Section III - Limits Of Insurance:

If coverage provided to the additional insured is required by a contract or agreement, the most we will pay on behalf of the additional insured is the amount of insurance:

a. Required by the contract or agreement; or

b. Available under the applicable Limits of Insurance shown in the Declarations;

whichever is less.

This endorsement shall not increase the applicable Limits of Insurance shown in the Declarations.

PRIMARY AND NONCONTRIBUTORY - OTHER INSURANCE CONDITION **CG-2001R(4-13)**

This endorsement modifies insurance provided under the following:

COMMERCIAL GENERAL LIABILITY COVERAGE PART

PRODUCTS-COMPLETED OPERATIONS LIABILITY COVERAGE FORM

RESIDENTIAL CARE FACILITY LIABILITY COVERAGE PART

The following is added to the Other Insurance Condition and supersedes any provision to the contrary:

Primary And Noncontributory Insurance

This insurance is primary to and will not seek contribution from any other insurance available to an additional insured under your policy provided that:

(1) The additional insured is a Named Insured under such other insurance; and

(2) You have agreed in writing in a contract or agreement that this insurance would be primary and would not seek contribution from any other insurance available to the additional insured.

Item # 23-0182
Munis# 3202929

CITY OF SANTA FE
AMENDMENT No. 1 TO
THE PRIORITY LINE REPLACEMENT
PRICE AGREEMENT
ITEM# 21-0484

This AMENDMENT No. 1 (the "Amendment") to the CITY OF SANTA FE AGREEMENT dated September 8, 2021 (the "Agreement"), between the City of Santa Fe (the "City") and Sub Surface Contracting Inc. (the "Contractor"). The date of this Amendment shall be the date when it is executed by the City.

RECITALS

A. Under the terms of the Agreement, Contractor has agreed to provide services for the Priority Line Replacement for the City of Santa Fe.

B. Pursuant to Article 14 of the Agreement, and for good and valuable consideration, the receipt and sufficiency of which are acknowledged by the parties, the City and the Contractor agree as follows:

1. COMPENSATION.

Article 2, paragraph A of the Agreement is amended to increase the "up to" amount by two million seven hundred and ninety thousand dollars ($2,790,000), so that Article 2, paragraph A reads in its entirety as follows:

A. The City shall pay to the Contractor in full payment for services satisfactorily performed at total amount up to four million six hundred forty nine thousand nine hundred and twenty seven dollars and ninety five cents ($4,649,927.95). The New Mexico gross receipts tax levied on the amounts payable under this Agreement totaling one hundred eighty nine thousand eight hundred forty three dollars and seventy five cents ($390,072.05) shall be paid by the City to the Contractor as described in Exhibit A attached hereto. **The total amount payable to the Contractor under this Agreement, including gross receipts tax and expenses, shall not five million forty thousand dollars ($5,040,000.). This amount is a maximum and not a guarantee that the work assigned to be performed by Contractor under this Agreement shall equal the amount stated herein. The parties do not intend for**

the Contractor to continue to provide services without compensation when the total compensation amount is reached. Contractor is responsible for notifying the City when the services provided under this Agreement reach the total compensation amount. In no event will the Contractor be paid for services provided in excess of the total compensation amount without this Agreement being amended in writing prior to those services in excess of the total compensation amount being provided.

2. AGREEMENT IN FULL FORCE.

Except as specifically provided in this Amendment, the Agreement remains and shall remain in full force and effect, in accordance with its terms.

IN WITNESS WHEREOF, the parties have executed this Amendment No.1 to the City of Santa Fe Price Agreement as of the dates set forth below.

CITY OF SANTA FE:

ALAN WEBBER, MAYOR

Date: May 1, 2023

CONTRACTOR:
SUB SURFACE CONTRACTING.

NAME & TITLE

Date: 3-28-2023
CRS# 02104256000
Registration #46991

ATTEST:

KRISTINE BUSTOS MIHELCIC ,CITY CLERK XIV
GB MTG 04/26/23

APPROVED AS TO FORM:

Patricia Feghali
Patricia Feghali (Mar 24, 2023 10:06 MDT)

PATRICIA FEGHALI, ASSISTANT CITY ATTORNEY

APPROVED FOR FINANCES:

Emily K. Oster
Emily K. Oster (Apr 30, 2023 22:28 MDT)

EMILY OSTER, FINANCE DIRECTOR

5050395.572970 WTR1950536
Org/Obj

City of Santa Fe, New Mexico

memo

Date: March 28, 2023

To: Finance Committee / Public Works-Public Utilities Committee

Via: Emily Oster, Finance Director EKO
Travis Dutton-Leyda, Chief Procurement Officer TDL
John Dupuis, Public Utilities Department Director JD
Jesse D. Roach, Water Division Director

From: Michael R. Moya, T&D Section Manager
Bill Huey, Water Division Engineer Associate BH

RE: Request approval of Amendment #1 to add funds to the Priority Line Replacement Price Agreement, CIP # 3058 Sub Surface Constructionin the amount of $2,790,000 including NMGRT for the remainder of the contract term (FY2024-25).

ITEM AND ISSUE:

The Water Division requests increasing the amount of award for bid number '21/43/B for the FY 22/23 Priority Line Replacement Price Agreement, CIP # 3058 to Sub Surface Construction by $2,790,000.00 inclusive of NMGRT for the remaining three (3) Fiscal Years, FY 2022-23 until FY2024-25.

Approval of the BAR – Budget Increase in the amount of $5,000,000 from the Water Enterprise Fund cash balance into the Water CIP fund for FY 2023, of which $2,790,000 is for this amendment.

BACKGROUND AND SUMMARY:

City Council has awarded bid number '21/43/B for the Priority Line Replacement Price Agreement, CIP # 3058 to Sub Surface Contracting, Inc. (Sub Surface) and A.A.C. Construction, LLC (AAC) for four (4) Fiscal Years, FY 2021-22 until FY2024-25 in the amount of $3,500,000 inclusive of NMGRT. Future funding was dependent upon the availability of CIP funds.

The Priority Line Replacement Price Agreement is an on-call requirements contract, with the Water Division issuing work orders as needed for work such as water line replacements. The contract is funded from CIP for Transmission and Distribution to work on their infrastructure.

Current expenditures on this contract are still at or below the initial contract amount. Current work on the contract will need additional funds. The contract funding needed for the completion of the contract term for Sub Surface is $2,790,000 inclusive of NMGRT. Total funding for the entire contract with AAC will be $5,040,000 inclusive of NMGRT. Funding for this amendment #1 will be available upon approval of the BAR/ Increase attached to Item D, AAC PLR Amendment #1 on this agenda. The BAR is in the amount of $5,000,000 including $2,790,000 for Sub Surface PLR #1 and $2,210,000 for AAC PLR #1 for a combined amount of $2,790,000 for a combined amount of $5,000,000.

PROCUREMENT:
21/43/B for the FY 2022 Priority Line Replacement

CONTRACT NUMBER:

A.A.C Construction # 3202778.

FUNDING SOURCE:
The funding source is:
Water Enterprise Fund/ CIP
FY 2023
Fund Name/Number: Water Enterprise Fund/ 500
Munis Org Name/Number: Water CIP / 5050395
Munis Object Name/Number: WIP Construction / 572970

RECOMMENDATION:

The Water Division recommends:

- Review and approval of increase of contract amount to Sub Surface Construction for the Priority Line Replacement Price Agreement, CIP # 3058 under ITB No. '21/43/B of $2,790,000 for a total amount of $5,040,000 inclusive of NMGRT through FY2024-25.

Log # *{Finance use only}*:	
Batch # *{Finance use only}*:	

City of Santa Fe, New Mexico
BUDGET AMENDMENT RESOLUTION (BAR)

DEPARTMENT / DIVISION NAME	DATE
PUD/Water/CIP	3/17/2023

ITEM DESCRIPTION	ORG	OBJECT	PROJECT	INCREASE	DECREASE
EXPENDITURES				*{enter as positive #}*	*{enter as negative #}*
Water CIP WIP Construction	5050395	572970	WTR1950535	5,000,000	
REVENUES				*{enter as negative #}*	*{enter as positive #}*
				$ 5,000,000	$ -

JUSTIFICATION: *(use additional page if needed)*
--Attach supporting documentation/memo

Budget Increase from Cash Balance in Water Enterprise Fund for Priority Line Replacement

Price Agreements Amendments #1 to A.A.C Construction and Sub Surface for

FY 23 CIP3058

{Complete section below if BAR results in a net change to ANY Fund}

Fund(s) Affected	Fund Balance Increase/(Decrease)
505	(5,000,000)
TOTAL:	**(5,000,000)**

Maya Martinez — 3/17/2023
Prepared By *{print name}* — Date

Division Director Signature *{optional}* — Date

John Dupuis (Apr 4, 2023 17:41 MDT)
Department Director Signature — Date

{Use this form for Finance Committee/ City Council agenda items ONLY}

CITY COUNCIL APPROVAL

City Council Approval Date

Agenda Item #:

Andy Hopkins — 4/5/23
Budget Officer — Date

Finance Director *{≤ $5,000}* — Date

City Manager *{≤ $60,000}* — Date

City of Santa Fe

Real Estate Summary of Contracts, Agreements, Amendments & Leases

Section to be completed by department

1. Munis Contract # **3202929**

Contractor: **Sub Surface Contracting**

Description: **CIP# 3058 Priority Line Replacement**

Contract ☐ Agreement ☉ Lease / Rent ☐ Amendment ☐

Term Start Date: **as approved** Term End Date: **6/30/25**

☑ Approved by Council Date: **Pending**

Contract / Lease: Contract $2,250,000

Amendment # 1 to the Original Contract / Lease # 21-0484

Increase/(Decrease) Amount $ 2,790,000

Extend Termination Date to: N/A

☉ Approved by Council Date: Pending

Amendment is for:

2. **HISTORY of Contract, Amendments & Lease / Rent - Please Elaborate** (option: attach spreadsheet if multiple amendments)

Original Contract # 21-0484 $2,250,000 approved 9/8/21

3. **Procurement History: 21/43/B**

Purchasing Officer Review: Apr 5, 2023 Date:

Comment & Exceptions: Amending compensation

4. **Funding Source: Water Enterprise Fund CIP** **Org / Object: 5050395.572970**

Andy Hopkins
Andy Hopkins (Apr 5, 2023 17:18 MDT)

Budget Officer Approval: Apr 5, 2023 Date:

Comment & Exceptions:

Staff Contact who completed this form: Maya Martinez Phone # **4271**

Email: **mfmartinez@santafenm.gov**

To be recorded by City Clerk:

Clerk #

Date of Execution:

City of Santa Fe

Treasury Department
200 Lincoln Ave.
Santa Fe, New Mexico 87504-0909
505-955-6551

BUSINESS REGISTRATION

Business Name: SUB SURFACE CONTRACTING INC.
DBA: SUB SURFACE CONTRACTING INC.

Business Location: 27 PASEO DE RIVER A
SANTA FE , NM 87507

CRS Number: 02104256000

Owner: SUB SURFACE CONTRACTING INC.

License Number: 46991

License Type: Business License - Renewable

Issued Date: March 28, 2022

Classification: Contractor - Specialty

Expiration Date: March 28, 2023

Fees Paid: $35.00

SUB SURFACE CONTRACTING INC.
27 A PASEO DE RIVER
SANTA FE, NM 87507

THIS IS NOT A CONSTRUCTION PERMIT OR SIGN PERMIT. APPROPRIATE PERMITS MUST BE OBTAINED FROM THE CITY OF SANTA FE BUILDING PERMIT DIVISION PRIOR TO COMMENCEMENT OF ANY CONSTRUCTION OR THE INSTALLATION OF ANY EXTERIOR SIGN.

THIS REGISTRATION/LICENSE IS NOT TRANSFERRABLE TO OTHER BUSINESSES OR PREMISES.

TO BE POSTED IN A CONSPICUOUS PLACE

Ver 1.6 2.7.2020

ACORD

CERTIFICATE OF LIABILITY INSURANCE

DATE (MM/DD/YYYY)
12/26/2022

THIS CERTIFICATE IS ISSUED AS A MATTER OF INFORMATION ONLY AND CONFERS NO RIGHTS UPON THE CERTIFICATE HOLDER. THIS CERTIFICATE DOES NOT AFFIRMATIVELY OR NEGATIVELY AMEND, EXTEND OR ALTER THE COVERAGE AFFORDED BY THE POLICIES BELOW. THIS CERTIFICATE OF INSURANCE DOES NOT CONSTITUTE A CONTRACT BETWEEN THE ISSUING INSURER(S), AUTHORIZED REPRESENTATIVE OR PRODUCER, AND THE CERTIFICATE HOLDER.

IMPORTANT: If the certificate holder is an ADDITIONAL INSURED, the policy(ies) must have ADDITIONAL INSURED provisions or be endorsed. If SUBROGATION IS WAIVED, subject to the terms and conditions of the policy, certain policies may require an endorsement. A statement on this certificate does not confer rights to the certificate holder in lieu of such endorsement(s).

PRODUCER License # 0757776 HUB International Insurance Services (SOW) 2905 Rodeo Park Drive East Building 6, Suite 100 Santa Fe, NM 87505	CONTACT NAME: PHONE (A/C, No, Ext): (505) 982-4296 FAX (A/C, No): (866) 621-0427 E-MAIL ADDRESS:
	INSURER(S) AFFORDING COVERAGE — NAIC #
	INSURER A : ACUITY, A Mutual Insurance Company — 14184
INSURED Sub Surface Contracting Inc 27A Paseo De River St Santa Fe, NM 87507	INSURER B : Builders Trust of New Mexico
	INSURER C :
	INSURER D :
	INSURER E :
	INSURER F :

COVERAGES **CERTIFICATE NUMBER:** **REVISION NUMBER:**

THIS IS TO CERTIFY THAT THE POLICIES OF INSURANCE LISTED BELOW HAVE BEEN ISSUED TO THE INSURED NAMED ABOVE FOR THE POLICY PERIOD INDICATED. NOTWITHSTANDING ANY REQUIREMENT, TERM OR CONDITION OF ANY CONTRACT OR OTHER DOCUMENT WITH RESPECT TO WHICH THIS CERTIFICATE MAY BE ISSUED OR MAY PERTAIN, THE INSURANCE AFFORDED BY THE POLICIES DESCRIBED HEREIN IS SUBJECT TO ALL THE TERMS, EXCLUSIONS AND CONDITIONS OF SUCH POLICIES. LIMITS SHOWN MAY HAVE BEEN REDUCED BY PAID CLAIMS.

INSR LTR	TYPE OF INSURANCE	ADDL INSD	SUBR WVD	POLICY NUMBER	POLICY EFF (MM/DD/YYYY)	POLICY EXP (MM/DD/YYYY)	LIMITS	
A	X COMMERCIAL GENERAL LIABILITY			Z75944	7/1/2022	7/1/2023	EACH OCCURRENCE	$ 1,000,000
	CLAIMS-MADE X OCCUR						DAMAGE TO RENTED PREMISES (Ea occurrence)	$ 250,000
	X PD Ded: $500						MED EXP (Any one person)	$ 10,000
	GEN'L AGGREGATE LIMIT APPLIES PER:						PERSONAL & ADV INJURY	$ 1,000,000
	POLICY X PRO-JECT LOC						GENERAL AGGREGATE	$ 3,000,000
	OTHER:						PRODUCTS - COMP/OP AGG	$ 3,000,000
								$
A	AUTOMOBILE LIABILITY			Z75944	7/1/2022	7/1/2023	COMBINED SINGLE LIMIT (Ea accident)	$ 1,000,000
	X ANY AUTO						BODILY INJURY (Per person)	$
	OWNED AUTOS ONLY / SCHEDULED AUTOS						BODILY INJURY (Per accident)	$
	X HIRED AUTOS ONLY / X NON-OWNED AUTOS ONLY						PROPERTY DAMAGE (Per accident)	$
								$
A	UMBRELLA LIAB X OCCUR			Z75944	7/1/2022	7/1/2023	EACH OCCURRENCE	$ 2,000,000
	X EXCESS LIAB CLAIMS-MADE						AGGREGATE	$ 2,000,000
	DED X RETENTION $ 0							$
B	WORKERS COMPENSATION AND EMPLOYERS' LIABILITY ANY PROPRIETOR/PARTNER/EXECUTIVE OFFICER/MEMBER EXCLUDED? (Mandatory in NH) Y / N: Y If yes, describe under DESCRIPTION OF OPERATIONS below	N / A		0692	1/1/2023	1/1/2024	PER STATUTE / OTH-ER	
							E.L. EACH ACCIDENT	$ 2,000,000
							E.L. DISEASE - EA EMPLOYEE	$ 2,000,000
							E.L. DISEASE - POLICY LIMIT	$ 2,000,000
A	Leased/Rented Eqpt			Z75944	7/1/2022	7/1/2023	Ded: $500/Limit:	200,000

DESCRIPTION OF OPERATIONS / LOCATIONS / VEHICLES (ACORD 101, Additional Remarks Schedule, may be attached if more space is required)

CERTIFICATE HOLDER

City of Santa Fe
Public Utilities Department
801 West San Mateo
Santa Fe, NM 87505

CANCELLATION

SHOULD ANY OF THE ABOVE DESCRIBED POLICIES BE CANCELLED BEFORE THE EXPIRATION DATE THEREOF, NOTICE WILL BE DELIVERED IN ACCORDANCE WITH THE POLICY PROVISIONS.

AUTHORIZED REPRESENTATIVE

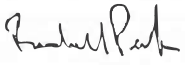

© 1988-2015 ACORD CORPORATION. All rights reserved.
The ACORD name and logo are registered marks of ACORD

CITY OF SANTA FE PROCUREMENT CHECKLIST

Contractor Name: Sub Surface Contracting, Inc.

Procurement Title: 21/43/B Priority Line Replacement Price Agreement, CIP # 3058

Procurement Method: State Price Agreement ☐ *Cooperative* ☐ *Sole Source* ☐ *Other* ☐ _____

Exempt ☐ *Request For Proposal* (RFP) ☒ *Invitation To Bid (ITB)* ☐ *Contract under 60K* ☐ *Contract over 60K* ☐

Department Requesting Bill Huey Water Division, PUD

Procurement Requirements:
A procurement file shall be maintained for all contracts, regardless of the method of procurement. The procurement file shall contain the basis on which the award is made, all submitted bids, all evaluation materials, score sheets, quotations and all other documentation related to or prepared in conjunction with evaluation, negotiation, and the award process. The procurement shall contain a written determination from the Requesting Department, signed by the purchasing officer, setting forth the reasoning for the contract award decision before submitting to the Committees. .

REQUIRED DOCUMENTS FOR APPROVAL BY PURCHASING*

YES	N/A	
☒	☐	Approved Procurement Checklist (by Purchasing)
☒	☐	Memo addressed to City Manager (under 60K) Committees/City Council (over 60K)
☐	☒	State Price Agreement
☐	☒	RFP
☐	☒	Evaluation Committee Report
☒	☐	ITB
☒	☐	Bib Tab
☐	☒	Quotes (3 valid current quotes)
☐	☒	Cooperative Agreement
☐	☒	Sole Source Request and Determination Form
☐	☒	Contractors Exempt Letter
☒	☐	Purchasing Officers approval for exempt procurement
☐	☒	BAR
☐	☒	FIR
☒	☐	Executed Contract, Agreement or Amendment
☒	☐	Current Business Registration and CRS numbers on contract or agreement
☒	☐	Summary of Contracts and Agreements form
☐	☒	Certificate of Insurance
☐	☐	All documentation presented to Committees
☐	☐	Other: _____

Public Utilities Dept / Water Division/Bill Huey (Bill Huey)	Engineer	
Department Rep Printed Name (attesting that all information included)	Title	Date
	Contracts Supervisor	Apr 5, 2023
Purchasing Officer (attesting that all information is reviewed)	Title	Date

Include all other substantive documents and records of communication that pertain to the procurement and any resulting contract.

*

City of Santa Fe, New Mexico

memo

Date: August 9, 2021

To: Public Works-Public Utilities Committee / Finance Committee

From: Michael R. Moya, T&D Section Manager MM
Bill Huey, Water Division Engineer Associate BH

Via: Jesse D. Roach, Water Division Director JR

RE: Request to award bid number '21/43/B for the FY 2022 Priority Line Replacement Price Agreement, CIP # 3058 to Sub Surface Contracting, Inc. and A.A.C. Construction, LLC.; Request approval of a Budget Adjustment Request/Budget increase in the amount of $3,500,000.

ITEM AND ISSUE:

The Water Division requests award of bid number '21/43/B for the FY 21/22 Priority Line Replacement Price Agreement, CIP # 3058 to Sub Surface Contracting, Inc. and A.A.C. Construction, LLC for the remainder of four (4) Fiscal Years, FY 2021-22 until FY2024-25. Initial funding of $3,500,000 inclusive NMGRT is requested for FY2021-22. Funding is broken down for each contractor as follows: $2,250,000.00 inclusive of NMGRT for Sub Surface and $1,250,000.00 inclusive of NMGRT for AAC. .Future funding will depend upon the availability of CIP funds.

BACKGROUND AND SUMMARY:

The Priority Line Replacement Price Agreement is an on-call requirements contract, with the Water Division issuing work orders as needed for work such as water line replacements. The contract is funded from CIP for Transmission and Distribution to work on their infrastructure. The initial Contract amount is limited to $3,500,000.00 inclusive of New Mexico Gross Receipt Tax (NMGRT).

This is was multi-contractor award ITB to set the applicable Bid Items for future work. The ITB was only used to select the winning Contractors. Future work will be assigned under fully signed Work Orders for planned work on will be followed with a signed Work Order for Emergency repair. The exact type of work required will be used to select from the applicable Bid Items. Not every Bit Item is anticipated to be used.

The initial contract period is Fiscal Years 2021-2025. The bids for this project were opened on June 17, 2021 and were subsequently evaluated for completeness and accuracy. The low bid in the amount of $892,448.25 plus NMGRT was submitted by Sub Surface Contracting, Inc. A second acceptable bid of $933,364.22 was submitted by A.A.C. Construction, LLC. The Water Division is planning on replacing pipe on multiple streets in the Apache, San Ildefonso, San Felipe, MaClovia, Isabel and Rosina neighborhood, as well as Bishops Lodge between Artist and Murales Roads, Lorenzo Road, Malaga

Lane, Pino Road, San Isabel Street, Sosaya Street, Camino Santander and Camino Santiago/Camino Matias.

A summary of the bids is provided below:

Bidders	Total Bid without NMGRT	Bid Including Veterans preference without NMGRT
Sub Surface Contracting, Inc.	$892,448.25	$821,052.39
A.A.C. Construction, LLC	$933,364.22	
TLC Plumbing & Utility	$1,158,308.40	
Blueline Construction, Inc.	$1,476,101.57	
Allied 360 Construction, LLC	$2,364,321.74	

CONTRACT NUMBER:
The FY22 Munis contract number:
Sub Surface Contracting # 3202929
A.A.C Construction # 3202927

FUNDING SOURCE:
The funding source is:
Water Enterprise Fund/ CIP
FY 2022
Fund Name/Number: Water Enterprise Fund/ 500
Munis Org Name/Number: Water CIP / 5050395
Munis Object Name/Number: WIP Construction / 572970

Funds for this work will be available in Business Unit, Line Item 5050395.572970 in the amount of $1,600,000.00 plus NMGRT upon approval of the BAR Budget Increase.

RECOMMENDATION:

The Water Division recommends:

- Review and approval of award of contracts to Sub Surface Contracting, Inc. and A.A.C Construction, LLC for the FY 21/22 Priority Line Replacement Price Agreement, CIP # 3058 under ITB No. '21/43/B for a total amount of $3,500,000.00 inclusive of NMGRT for FY2021-22.

- Approval of the BAR – Budget Increase in the amount of $3,500,000 from the Water Enterprise Fund cash balance into the Water CIP fund for FY 2022.

- Forwarding and recommendation of approval of award and contract to the Finance Committee for their consideration and approval to the Governing Body for their final consideration and approval.

SUBSURF-01 DONISCHUK

CERTIFICATE OF LIABILITY INSURANCE

DATE (MM/DD/YYYY) 5/20/2021

THIS CERTIFICATE IS ISSUED AS A MATTER OF INFORMATION ONLY AND CONFERS NO RIGHTS UPON THE CERTIFICATE HOLDER. THIS CERTIFICATE DOES NOT AFFIRMATIVELY OR NEGATIVELY AMEND, EXTEND OR ALTER THE COVERAGE AFFORDED BY THE POLICIES BELOW. THIS CERTIFICATE OF INSURANCE DOES NOT CONSTITUTE A CONTRACT BETWEEN THE ISSUING INSURER(S), AUTHORIZED REPRESENTATIVE OR PRODUCER, AND THE CERTIFICATE HOLDER.

IMPORTANT: If the certificate holder is an ADDITIONAL INSURED, the policy(ies) must have ADDITIONAL INSURED provisions or be endorsed. If SUBROGATION IS WAIVED, subject to the terms and conditions of the policy, certain policies may require an endorsement. A statement on this certificate does not confer rights to the certificate holder in lieu of such endorsement(s).

PRODUCER License # 0757776
HUB International Insurance Services (SOW)
2905 Rodeo Park Drive East
Building 6, Suite 100
Santa Fe, NM 87505

CONTACT NAME: Michelle Vialpando
PHONE (A/C, No, Ext): (505) 992-1873 FAX (A/C, No): (866) 621-0427
E-MAIL ADDRESS: michelle.vialpando@hubinternational.com

INSURER(S) AFFORDING COVERAGE	NAIC #
INSURER A : ACUITY, A Mutual Insurance Company	14184
INSURER B : Builders Trust of New Mexico	
INSURER C :	
INSURER D :	
INSURER E :	
INSURER F :	

INSURED
Sub Surface Contracting Inc
27A Paseo De River St
Santa Fe, NM 87507

COVERAGES **CERTIFICATE NUMBER:** **REVISION NUMBER:**

THIS IS TO CERTIFY THAT THE POLICIES OF INSURANCE LISTED BELOW HAVE BEEN ISSUED TO THE INSURED NAMED ABOVE FOR THE POLICY PERIOD INDICATED. NOTWITHSTANDING ANY REQUIREMENT, TERM OR CONDITION OF ANY CONTRACT OR OTHER DOCUMENT WITH RESPECT TO WHICH THIS CERTIFICATE MAY BE ISSUED OR MAY PERTAIN, THE INSURANCE AFFORDED BY THE POLICIES DESCRIBED HEREIN IS SUBJECT TO ALL THE TERMS, EXCLUSIONS AND CONDITIONS OF SUCH POLICIES. LIMITS SHOWN MAY HAVE BEEN REDUCED BY PAID CLAIMS.

INSR LTR	TYPE OF INSURANCE	ADDL INSD	SUBR WVD	POLICY NUMBER	POLICY EFF (MM/DD/YYYY)	POLICY EXP (MM/DD/YYYY)	LIMITS	
A	X COMMERCIAL GENERAL LIABILITY			Z75944	7/1/2020	7/1/2021	EACH OCCURRENCE	$ 1,000,000
	CLAIMS-MADE [X] OCCUR						DAMAGE TO RENTED PREMISES (Ea occurrence)	$ 250,000
	X PD Ded: $500						MED EXP (Any one person)	$ 10,000
							PERSONAL & ADV INJURY	$ 1,000,000
	GEN'L AGGREGATE LIMIT APPLIES PER:						GENERAL AGGREGATE	$ 3,000,000
	POLICY [X] PRO-JECT [ ] LOC						PRODUCTS - COMP/OP AGG	$ 3,000,000
	OTHER:							$
A	AUTOMOBILE LIABILITY			Z75944	7/1/2020	7/1/2021	COMBINED SINGLE LIMIT (Ea accident)	$ 1,000,000
	X ANY AUTO						BODILY INJURY (Per person)	$
	OWNED AUTOS ONLY [ ] SCHEDULED AUTOS						BODILY INJURY (Per accident)	$
	X HIRED AUTOS ONLY [X] NON-OWNED AUTOS ONLY						PROPERTY DAMAGE (Per accident)	$
								$
A	UMBRELLA LIAB [X] OCCUR			Z75944	7/1/2020	7/1/2021	EACH OCCURRENCE	$ 2,000,000
	X EXCESS LIAB CLAIMS-MADE						AGGREGATE	$ 2,000,000
	DED [X] RETENTION $ 0							$
B	WORKERS COMPENSATION AND EMPLOYERS' LIABILITY Y/N	N/A		0692	1/1/2021	1/1/2022	X PER STATUTE [ ] OTH-ER	
	ANY PROPRIETOR/PARTNER/EXECUTIVE OFFICER/MEMBER EXCLUDED? (Mandatory in NH) [Y]						E.L. EACH ACCIDENT	$ 2,000,000
	If yes, describe under DESCRIPTION OF OPERATIONS below						E.L. DISEASE - EA EMPLOYEE	$ 2,000,000
							E.L. DISEASE - POLICY LIMIT	$ 2,000,000
A	Leased/Rented Eqpt			Z75944	7/1/2020	7/1/2021	Ded: $500 / Limit	200,000

DESCRIPTION OF OPERATIONS / LOCATIONS / VEHICLES (ACORD 101, Additional Remarks Schedule, may be attached if more space is required)

CERTIFICATE HOLDER

City of Santa Fe
Public Utilities Department
801 West San Mateo
Santa Fe, NM 87505

CANCELLATION

SHOULD ANY OF THE ABOVE DESCRIBED POLICIES BE CANCELLED BEFORE THE EXPIRATION DATE THEREOF, NOTICE WILL BE DELIVERED IN ACCORDANCE WITH THE POLICY PROVISIONS.

AUTHORIZED REPRESENTATIVE

© 1988-2015 ACORD CORPORATION. All rights reserved.
The ACORD name and logo are registered marks of ACORD

SUBSURF-01 DONISCHUK

CERTIFICATE OF LIABILITY INSURANCE

DATE (MM/DD/YYYY) 5/20/2021

THIS CERTIFICATE IS ISSUED AS A MATTER OF INFORMATION ONLY AND CONFERS NO RIGHTS UPON THE CERTIFICATE HOLDER. THIS CERTIFICATE DOES NOT AFFIRMATIVELY OR NEGATIVELY AMEND, EXTEND OR ALTER THE COVERAGE AFFORDED BY THE POLICIES BELOW. THIS CERTIFICATE OF INSURANCE DOES NOT CONSTITUTE A CONTRACT BETWEEN THE ISSUING INSURER(S), AUTHORIZED REPRESENTATIVE OR PRODUCER, AND THE CERTIFICATE HOLDER.

IMPORTANT: If the certificate holder is an ADDITIONAL INSURED, the policy(ies) must have ADDITIONAL INSURED provisions or be endorsed. If SUBROGATION IS WAIVED, subject to the terms and conditions of the policy, certain policies may require an endorsement. A statement on this certificate does not confer rights to the certificate holder in lieu of such endorsement(s).

PRODUCER License # 0757776 HUB International Insurance Services (SOW) 2905 Rodeo Park Drive East Building 6, Suite 100 Santa Fe, NM 87505	CONTACT NAME: Michelle Vialpando PHONE (A/C, No, Ext): (505) 992-1873 FAX (A/C, No): (866) 621-0427 E-MAIL ADDRESS: michelle.vialpando@hubinternational.com
	INSURER(S) AFFORDING COVERAGE — NAIC #
	INSURER A : ACUITY, A Mutual Insurance Company — 14184
INSURED Sub Surface Contracting Inc 27A Paseo De River St Santa Fe, NM 87507	INSURER B : Builders Trust of New Mexico
	INSURER C :
	INSURER D :
	INSURER E :
	INSURER F :

COVERAGES **CERTIFICATE NUMBER:** **REVISION NUMBER:**

THIS IS TO CERTIFY THAT THE POLICIES OF INSURANCE LISTED BELOW HAVE BEEN ISSUED TO THE INSURED NAMED ABOVE FOR THE POLICY PERIOD INDICATED. NOTWITHSTANDING ANY REQUIREMENT, TERM OR CONDITION OF ANY CONTRACT OR OTHER DOCUMENT WITH RESPECT TO WHICH THIS CERTIFICATE MAY BE ISSUED OR MAY PERTAIN, THE INSURANCE AFFORDED BY THE POLICIES DESCRIBED HEREIN IS SUBJECT TO ALL THE TERMS, EXCLUSIONS AND CONDITIONS OF SUCH POLICIES. LIMITS SHOWN MAY HAVE BEEN REDUCED BY PAID CLAIMS.

INSR LTR	TYPE OF INSURANCE	ADDL INSD	SUBR WVD	POLICY NUMBER	POLICY EFF (MM/DD/YYYY)	POLICY EXP (MM/DD/YYYY)	LIMITS	
A	X COMMERCIAL GENERAL LIABILITY CLAIMS-MADE [X] OCCUR X PD Ded: $500 GEN'L AGGREGATE LIMIT APPLIES PER: POLICY [X] PRO-JECT [ ] LOC OTHER:			Z75944	7/1/2021	7/1/2022	EACH OCCURRENCE DAMAGE TO RENTED PREMISES (Ea occurrence) MED EXP (Any one person) PERSONAL & ADV INJURY GENERAL AGGREGATE PRODUCTS - COMP/OP AGG	$ 1,000,000 $ 250,000 $ 10,000 $ 1,000,000 $ 3,000,000 $ 3,000,000
A	AUTOMOBILE LIABILITY X ANY AUTO OWNED AUTOS ONLY [ ] SCHEDULED AUTOS X HIRED AUTOS ONLY [X] NON-OWNED AUTOS ONLY			Z75944	7/1/2021	7/1/2022	COMBINED SINGLE LIMIT (Ea accident) BODILY INJURY (Per person) BODILY INJURY (Per accident) PROPERTY DAMAGE (Per accident)	$ 1,000,000 $ $ $
A	[ ] UMBRELLA LIAB [X] OCCUR X EXCESS LIAB [ ] CLAIMS-MADE DED [X] RETENTION $ 0			Z75944	7/1/2021	7/1/2022	EACH OCCURRENCE AGGREGATE	$ 2,000,000 $ 2,000,000
B	WORKERS COMPENSATION AND EMPLOYERS' LIABILITY ANY PROPRIETOR/PARTNER/EXECUTIVE OFFICER/MEMBER EXCLUDED? (Mandatory in NH) Y/N: Y If yes, describe under DESCRIPTION OF OPERATIONS below	N/A		0692	1/1/2021	1/1/2022	X PER STATUTE [ ] OTH-ER E.L. EACH ACCIDENT E.L. DISEASE - EA EMPLOYEE E.L. DISEASE - POLICY LIMIT	$ 2,000,000 $ 2,000,000 $ 2,000,000
A	Leased/Rented Eqpt			Z75944	7/1/2021	7/1/2022	Ded: $500 / Limit	200,000

DESCRIPTION OF OPERATIONS / LOCATIONS / VEHICLES (ACORD 101, Additional Remarks Schedule, may be attached if more space is required)

CERTIFICATE HOLDER

City of Santa Fe
Public Utilities Department
801 West San Mateo
Santa Fe, NM 87505

CANCELLATION

SHOULD ANY OF THE ABOVE DESCRIBED POLICIES BE CANCELLED BEFORE THE EXPIRATION DATE THEREOF, NOTICE WILL BE DELIVERED IN ACCORDANCE WITH THE POLICY PROVISIONS.

AUTHORIZED REPRESENTATIVE

© 1988-2015 ACORD CORPORATION. All rights reserved.
The ACORD name and logo are registered marks of ACORD

City of Santa Fe

Treasury Department
200 Lincoln Ave.
Santa Fe, New Mexico 87504-0909
505-955-6551

BUSINESS REGISTRATION

Business Name: SUB SURFACE CONTRACTING INC.
DBA: SUB SURFACE CONTRACTING INC.

Business Location: 27 PASEO DE RIVER A
SANTA FE , NM 87507

CRS Number: 02104256000

Owner: SUB SURFACE CONTRACTING INC.

License Number: 46991

License Type: Business License - Renewable

Issued Date: April 01, 2021

Classification: Contractor - Specialty

Expiration Date: April 01, 2022

Fees Paid: $35.00

SUB SURFACE CONTRACTING INC.
27 A PASEO DE RIVER
SANTA FE, NM 87507

THIS IS NOT A CONSTRUCTION PERMIT OR SIGN PERMIT. APPROPRIATE PERMITS MUST BE OBTAINED FROM THE CITY OF SANTA FE BUILDING PERMIT DIVISION PRIOR TO COMMENCEMENT OF ANY CONSTRUCTION OR THE INSTALLATION OF ANY EXTERIOR SIGN.

THIS REGISTRATION/LICENSE IS NOT TRANSFERRABLE TO OTHER BUSINESSES OR PREMISES.

TO BE POSTED IN A CONSPICUOUS PLACE

CITY OF SANTA FE PROCUREMENT CHECKLIST

Contractor Name: Sub Surface Contracting, Inc.

Procurement Title: 21/43/B Priority Line Replacement Price Agreement, CIP # 3058

Procurement Method: State Price Agreement ☐ *Cooperative* ☐ *Sole Source* ☐ *Other* ☐ _____

Exempt ☐ *Request For Proposal* (RFP) ☒ *Invitation To Bid (ITB)* ☐ *Contract under 60K* ☐ *Contract over 60K* ☐

Department Requesting Bill Huey Water Division, PUD

Procurement Requirements:
A procurement file shall be maintained for all contracts, regardless of the method of procurement. The procurement file shall contain the basis on which the award is made, all submitted bids, all evaluation materials, score sheets, quotations and all other documentation related to or prepared in conjunction with evaluation, negotiation, and the award process. The procurement shall contain a written determination from the Requesting Department, signed by the purchasing officer, setting forth the reasoning for the contract award decision before submitting to the Committees. .

REQUIRED DOCUMENTS FOR APPROVAL BY PURCHASING*

YES	N/A	
☒	☐	Approved Procurement Checklist (by Purchasing)
☒	☐	Memo addressed to City Manager (under 60K) Committees/City Council (over 60K)
☐	☒	State Price Agreement
☐	☒	RFP
☐	☒	Evaluation Committee Report
☒	☐	ITB
☒	☐	Bib Tab
☐	☒	Quotes (3 valid current quotes)
☐	☒	Cooperative Agreement
☐	☒	Sole Source Request and Determination Form
☐	☒	Contractors Exempt Letter
☒	☐	Purchasing Officers approval for exempt procurement
☐	☒	BAR
☐	☒	FIR
☒	☐	Executed Contract, Agreement or Amendment
☒	☐	Current Business Registration and CRS numbers on contract or agreement
☒	☐	Summary of Contracts and Agreements form
☐	☒	Certificate of Insurance
☐	☐	All documentation presented to Committees
☐	☐	Other: _____

Public Utilities Dept / Water Division/Bill Huey Bill Huey Engineer 8/17/21
Department Rep Printed Name (attesting that all information included) Title Date

Fran Dunaway Fran Dunaway (Aug 23, 2021 12:29 MDT) Chief Procurement Officer Aug 23, 2021
Purchasing Officer (attesting that all information is reviewed) Title Date

Include all other substantive documents and records of communication that pertain to the procurement and any resulting contract.

*

City of Santa Fe, New Mexico

memo

Date: August 9, 2021

To: Public Works-Public Utilities Committee / Finance Committee

From: Michael R. Moya, T&D Section Manager MM
Bill Huey, Water Division Engineer Associate BH

Via: Jesse D. Roach, Water Division Director JR

RE: Request to award bid number '21/43/B for the FY 2022 Priority Line Replacement Price Agreement, CIP # 3058 to Sub Surface Contracting, Inc. and A.A.C. Construction, LLC.; Request approval of a Budget Adjustment Request/Budget increase in the amount of $3,500,000.

ITEM AND ISSUE:

The Water Division requests award of bid number '21/43/B for the FY 21/22 Priority Line Replacement Price Agreement, CIP # 3058 to Sub Surface Contracting, Inc. and A.A.C. Construction, LLC for the remainder of four (4) Fiscal Years, FY 2021-22 until FY2024-25. Initial funding of $3,500,000 inclusive NMGRT is requested for FY2021-22. Funding is broken down for each contractor as follows: $2,250,000.00 inclusive of NMGRT for Sub Surface and $1,250,000.00 inclusive of NMGRT for AAC. .Future funding will depend upon the availability of CIP funds.

BACKGROUND AND SUMMARY:

The Priority Line Replacement Price Agreement is an on-call requirements contract, with the Water Division issuing work orders as needed for work such as water line replacements. The contract is funded from CIP for Transmission and Distribution to work on their infrastructure. The initial Contract amount is limited to $3,500,000.00 inclusive of New Mexico Gross Receipt Tax (NMGRT).

This is was multi-contractor award ITB to set the applicable Bid Items for future work. The ITB was only used to select the winning Contractors. Future work will be assigned under fully signed Work Orders for planned work on will be followed with a signed Work Order for Emergency repair. The exact type of work required will be used to select from the applicable Bid Items. Not every Bit Item is anticipated to be used.

The initial contract period is Fiscal Years 2021-2025. The bids for this project were opened on June 17, 2021 and were subsequently evaluated for completeness and accuracy. The low bid in the amount of $892,448.25 plus NMGRT was submitted by Sub Surface Contracting, Inc. A second acceptable bid of $933,364.22 was submitted by A.A.C. Construction, LLC. The Water Division is planning on replacing pipe on multiple streets in the Apache, San Ildefonso, San Felipe, MaClovia, Isabel and Rosina neighborhood, as well as Bishops Lodge between Artist and Murales Roads, Lorenzo Road, Malaga

Lane, Pino Road, San Isabel Street, Sosaya Street, Camino Santander and Camino Santiago/Camino Matias.

A summary of the bids is provided below:

Bidders	Total Bid without NMGRT	Bid Including Veterans preference without NMGRT
Sub Surface Contracting, Inc.	$892,448.25	$821,052.39
A.A.C. Construction, LLC	$933,364.22	
TLC Plumbing & Utility	$1,158,308.40	
Blueline Construction, Inc.	$1,476,101.57	
Allied 360 Construction, LLC	$2,364,321.74	

CONTRACT NUMBER:
The FY22 Munis contract number:
Sub Surface Contracting # 3202929
A.A.C Construction # 3202927

FUNDING SOURCE:
The funding source is:
Water Enterprise Fund/ CIP
FY 2022
Fund Name/Number: Water Enterprise Fund/ 500
Munis Org Name/Number: Water CIP / 5050395
Munis Object Name/Number: WIP Construction / 572970

Funds for this work will be available in Business Unit, Line Item 5050395.572970 in the amount of $1,600,000.00 plus NMGRT upon approval of the BAR Budget Increase.

RECOMMENDATION:

The Water Division recommends:

- Review and approval of award of contracts to Sub Surface Contracting, Inc. and A.A.C Construction, LLC for the FY 21/22 Priority Line Replacement Price Agreement, CIP # 3058 under ITB No. '21/43/B for a total amount of $3,500,000.00 inclusive of NMGRT for FY2021-22.

- Approval of the BAR – Budget Increase in the amount of $3,500,000 from the Water Enterprise Fund cash balance into the Water CIP fund for FY 2022.

- Forwarding and recommendation of approval of award and contract to the Finance Committee for their consideration and approval to the Governing Body for their final consideration and approval.

Log # {Finance use only}:	
Batch # {Finance use only}:	

City of Santa Fe, New Mexico
BUDGET AMENDMENT RESOLUTION (BAR)

DEPARTMENT / DIVISION NAME	DATE
PUD/Water/CIP	8/17/2021

ITEM DESCRIPTION	ORG	OBJECT	PROJECT	INCREASE	DECREASE
EXPENDITURES				{enter as positive #}	{enter as negative #}
Water CIP WIP Construction	5050395	572970	WTR1950535	3,500,000	
REVENUES				{enter as negative #}	{enter as positive #}
				$ 3,500,000	$ -

JUSTIFICATION: *(use additional page if needed)*
--Attach supporting documentation/memo

Budget Increase from Cash Balance in Water Enterprise Fund for Priority Line Replacement

Price Agreements Award of Bid 21/43/B to A.A.C Construction and Sub Surface for

FY 2022 CIP3058

{Complete section below if BAR results in a net change to ANY Fund}

Fund(s) Affected	Fund Balance Increase/(Decrease)
505	(3,500,000)
TOTAL:	**(3,500,000)**

Maya Martinez — 8/17/2021
Prepared By {print name} — Date

Division Director Signature {optional} — Date

Shannon Jones — 3/19/2021
Department Director Signature — Date

{Use this form for Finance Committee/ City Council agenda items ONLY}

CITY COUNCIL APPROVAL

City Council Approval Date:

Agenda Item #:

Andy Hopkins — 8/20/21
Andy Hopkins (Aug 20, 2021 11:52 MDT)
Budget Officer — Date

Finance Director {≤ $5,000} — Date

City Manager {≤ $60,000} — Date

Item#**21-0484**
Munis Contract# 3202929

CITY OF SANTA FE

PRIORITY LINE REPLACEMENTPRICE
AGREEMENT

CIP # 3058

THIS AGREEMENT is made and entered into by and between the City of Santa Fe, New Mexico, hereinafter referred to as the "City," and **SUB SURFACE CONTRACTING, INC.**, hereinafter referred to as the Contractor, and is effective as of the date set forth below upon which it is executed by the Parties.

IT IS AGREED BETWEEN THE PARTIES:

1. Scope of Work.

A. The Contractor shall perform the following work and as described is Exhibit "A" attached hereto:

1) The Contractor shall perform all the work required by Water Division as required in the Contract Documents for Priority Line Replacement Contract. The work consists of, but is not limited to furnishing all equipment, labor and materials for the construction and repair of water mains, valves, hydrants, metered water service lines and settings, pressure reducing valves, vaults, and other incidental work such as pavement removal and replacement, traffic control all as required to extend, replace or repair water distribution, water storage, and water supply infrastructure, in accordance with the drawings, specifications, and other Contract Documents. All water piping shall be new, poly-wrapped ductile iron, unless otherwise specified.

2) The Contractor shall be responsible for verifications of all measurements and dimensions for bidding on each subsequent Work Order.

3) The Contractor shall provide and keep at the work site a complete "as built" record set of drawings that shall be corrected daily and shall show every change from the original approved drawings and specifications. These changes shall be forwarded to City periodically. The drawings shall reflect exact and actual "as-built" conditions of construction, installation, and erection as it progresses. Where drawings are not adequate to show "as built" conditions. Contractor shall prepare sketches which delineate the necessary "asbuilt" information. City shall furnish two (2) sets of all paper "blue-line" print "approved" drawings for use in accomplishing specified mark up. Final "as built" drawings shall be delivered to City by Contractor upon completion of the work.

4) The Contractor shall be responsible for maintaining traffic control at the site in conformance with the Manual on Uniform Traffic Control Devices.

5) The Contractor shall be responsible for all permits, fees, and State and City inspections associated with the construction.

6) Incorporation by Reference. All exhibits, addenda, schedules of ITB 21/XX/B attached hereto and all certificates, work order documents, drawings, as-built and other instruments contemplated to be delivered hereunder are hereby expressly made a part of this Agreement as fully as though set forth herein, and all references to this Agreement herein orin any of such writings shall be deemed to refer to and include all of such writings. This Agreement contains the entire agreement between the parties with respect to the subject matter hereof and supersedes all prior agreements and understandings, both written and oral, among theparties with respect to the subject matter hereof. If there is any conflict between such exhibits or addenda and the terms of this Agreement, such exhibits or addenda shall control.

2. Compensation.

A. The City shall pay to the Contractor in full payment for services satisfactorily performed at total amount up to two million seventy four thousand nine hundred twenty seven and ninety five cents ($2,074,927.95). The New Mexico gross receipts tax levied on the amounts payable under this Agreement totaling one hundred seventy five thousand seventy two dollars and five cents ($175,072.05) shall be paid by the City to the Contractor as described in Exhibit A attached hereto. **The total amount payable to the Contractor under this Agreement, including gross receipts tax and expenses, shall not two million two million two hundred and fifty thousand dollars ($2,250,000). This amount is a maximum and not a guarantee that the work assigned to be performed by Contractor under this Agreement shall equal the amount stated herein. The parties do not intend for the Contractor to continue to provide services without compensation when the total compensation amount is reached. Contractor is responsible for notifying the City when the services provided under this Agreement reach the total compensation amount. In no event will the Contractor be paid for services provided in excess of the total compensation amount without this Agreement being amended in writing prior to those services in excess of the total compensation amount being provided.**

B. Payment is subject to availability of funds pursuant to the Appropriations Paragraph set forth below and to any negotiations between the parties from year to year pursuant to Paragraph 1, Scope of Work, and to approval by the City. All invoices MUST BE received by the City no later than thirty 30) days after the termination of the Fiscal Year in which the services were delivered. Invoices received after such date WILL NOT BE PAID.

C. Contractor must submit a detailed statement accounting for all services performed and expenses incurred. If the City finds that the services are not acceptable, within thirty days after the date of receipt of written notice from the Contractor that payment is requested, it shall provide the Contractor a letter of exception explaining the defect or objection to the services, and outlining steps the Contractor may take to provide remedial action. Upon certification by the City that the services have been received and accepted, payment shall be tendered to the Contractor within thirty days after the date of acceptance. If payment is made by mail, the payment shall be deemed tendered on the date it is postmarked. However, the City shall not incur late charges, interest, or penalties for failure to make payment within the time specified herein.

3. Term.

THIS AGREEMENT SHALL NOT BECOME EFFECTIVE UNTIL APPROVED BY THE CITY. This Agreement shall terminate on **June 30, 2025** unless terminated pursuant to paragraph 4 (Termination), or paragraph 5 (Appropriations). In accordance with Section 13-1-150 NMSA 1978, no contract term for a professional services contract, including extensions and renewals, shall exceed four years, except as set forth in Section 13-1-150 NMSA 1978.

4. Termination.

A. Termination. This Agreement may be terminated by either of the parties hereto upon written notice delivered to the other party at least thirty (30) days prior to the intended date of

termination. Except as otherwise allowed or provided under this Agreement, the City sole liability upon such termination shall be to pay for acceptable work performed prior to the Contractor's receipt of the notice of termination, if the City is the terminating party, or the Contractors receipt of the notice of termination, if the Contractor is the terminating party; provided, however, that a notice of termination shall not nullify or otherwise affect either party'sliability for pre-termination defaults under or breaches of this Agreement. The Contractor shall submit an invoice for such work within thirty (30) days of receiving or sending the notice of termination. Notwithstanding the foregoing, this Agreement may be terminated immediately upon written notice to the Contractor if the Contractor becomes unable to perform the services contracted for, as determined by the City or if, during the term of this Agreement, the Contractor or any of its officers, employees or agents is indicted for fraud, embezzlement or other crime dueto misuse of City funds or due to the Appropriations paragraph herein. *THIS PROVISION JS NOT EXCLUSIVE AND DOES NOT WAIVE THE OTHER LEGAL RIGHTS AND REMEDIES CAUSED BY THE CONTRACTOR'S DEFAULT/BREACH OF THIS AGREEMENT.*

B. Termination Management. Immediately upon receipt by either the City or the Contractor of notice of termination of this Agreement, the Contractor shall: 1) not incur any further obligations for salaries, services or any other expenditure of funds under this Agreement withoutwritten approval of the City; 2) comply with all directives issued by the City in the notice oftermination as to the performance of work under this Agreement; and 3) take such action as the City shall direct for the protection, preservation, retention or transfer of all property titled to theCity and records generated under this Agreement. Any non-expendable personal property orequipment provided to or purchased by the Contractor with contract funds shall become property of the City upon termination and shall be submitted to the City as soon as practicable.

5. Appropriations.

The terms of this Agreement are contingent upon sufficient appropriations and authorization being made by the City Council for the performance of this Agreement. If sufficient appropriations and authorization are not made by the City Council, this Agreement shall terminate immediately upon written notice being given by the City to the Contractor. The City's decision asto whether sufficient appropriations are available shall be accepted by the Contractor and shall be final. If the City proposes an amendment to the Agreement to unilaterally reduce funding, the Contractor shall have the option to terminate the Agreement or to agree to the reduced funding, within thirty (30) days of receipt of the proposed amendment.

6. Status of Contractor.

The Contractor and its agents and employees are independent contractors performing professional services for the City and are not employees of the City. The Contractor and its agents and employees shall not accrue leave, retirement, insurance, bonding, use of City vehicles, or anyother benefits afforded to employees of the City as a result of this Agreement. The Contractor acknowledges that all sums received hereunder are reportable by the Contractor for tax purposes, including without limitation, self-employment and business income tax. The Contractor agrees not to purport to bind the City unless the Contractor has express written authority to do so, and then only within the strict limits of that authority.

7. Construction Contract Performance and Payment Bond.

A. When a construction contract is awarded in excess of twenty-five thousand dollars ($25,000), the following bonds or security shall be delivered to the City and shall become binding on the parties upon the execution of the contract. If the Contractor fails to deliver the required performance and payment bonds, the Contractor's bid shall be rejected, its bid security shall be enforced to the extent of actual damages. Award of the contract shall be made pursuant to the

Procurement Code in the following manner:

(1) a performance bond satisfactory to the City, executed by a surety company authorized to do business in this state and said surety to be approved in federal circular 570 as published by the United States treasury department or the state board of finance or the local governing authority, in an amount equal to one hundred percent of the price specifiedin the contract; and

(2) a payment bond satisfactory to the City, executed by a surety company authorized to do business in this state and said surety to be approved in federal circular 570 as published by the United States treasury department or the state board of finance or the local governing authority, in an amount equal to one hundred percent of the price specifiedin the contract, for the protection of all persons supplying labor and material to the contractor or its subcontractors for the performance of the work provided for in the contract.

B. A subcontractor shall provide a performance and payment bond on a public works Building project if the subcontractor's contract for work to be performed on a project is one hundred twenty-five thousand dollars ($125,000) or more.

8. Assignment.

The Contractor shall not assign or transfer any interest in this Agreement or assign any claims for money due or to become due under this Agreement without the prior written approval of the City.

9. Subcontracting.

The Contractor shall not subcontract any portion of the services to be performed under this Agreement without the prior written approval of the City. No such subcontract shall relieve the primary Contractor from its obligations and liabilities under this Agreement, nor shall any subcontract obligate direct payment from the City.

10. Release.

Final payment of the amounts due under this Agreement shall operate as a release of the City, its officers and employees from all liabilities, claims and obligations whatsoever arising from or under this Agreement.

11. Confidentiality.

Any confidential information provided to or developed by the Contractor in the performance of this Agreement shall be kept confidential and shall not be made available to any individual or organization by the Contractor without the prior written approval of the City.

12. Product of Service -- Copyright.

All materials developed or acquired by the Contractor under this Agreement shall becomethe property of the City and shall be delivered to the City no later than the termination date of this Agreement. Nothing developed or produced, in whole or in part, by the Contractor under this Agreement shall be the subject of an application for copyright or other claim of ownership by or on behalf of the Contractor.

13. Conflict of Interest; Governmental Conduct Act.

A. The Contractor represents and warrants that it presently has no interest and, duringthe term of this Agreement, shall not acquire any interest, direct or indirect, which would conflictin any manner or degree with the performance or services required under the Agreement.

B. The Contractor further represents and warrants that it has complied with, and, during the term of this Agreement, will continue to comply with, and that this Agreement complies with all applicable provisions of the Governmental Conduct Act, Chapter 10, Article 16 NMSA 1978.

C. Contractor's representations and warranties in Paragraphs A and B of this Article 13 are material representations of fact upon which the City relied when this Agreement was enteredinto by the parties. Contractor shall provide immediate written notice to the City if, at any timeduring the term of this Agreement, Contractor learns that Contractor's representations and warranties in Paragraphs A and B of this Article 13 were erroneous on the effective date of this Agreement or have become erroneous by reason of new or changed circumstances. If it is laterdetermined that Contractor's representations and warranties in Paragraphs A and B of this Article 13 were erroneous on the effective date of this Agreement or have become erroneous by reason ofnew or changed circumstances, in addition to other remedies available to the City and notwithstanding anything in the Agreement to the contrary, the City may immediately terminate the Agreement.

D. All terms defined in the Governmental Conduct Act have the same meaning in thissection.

14. Amendment.

A. This Agreement shall not be altered, changed or amended except by instrument in writing executed by the parties hereto and all other required signatories.

B. If the City proposes an amendment to the Agreement to unilaterally reduce funding due to budget or other considerations, the Contractor shall, within thirty (30) days of receipt of the proposed Amendment, have the option to terminate the Agreement, pursuant to the termination provisions as set forth in Article 4 herein, or to agree to the reduced funding.

15. Change Orders.

A. Changes. The Contractor may only make changes or revisions within the Scope of Work as defined by Article 1 and/or Exhibit 1 after receipt of written approval by the City Manager or his/her designee. Such change may only be made to Tasks or Sub-Task as defined in the Scope of Work. Under no circumstance shall such change affect the:

1) Deliverable requirements, as outlined in the Scope of Work;
2) Due date of any Deliverable, as outlined in the Scope of Work;
3) Compensation of any Deliverable, as outlined in the Scope of Work;
4) Agreement compensation, as outlined in Article 2; or
5) Agreement termination, as outlined in Article 4.

B. Change Request Process. In the event that circumstances warrant a change to accomplish the Scope of Work as described above, a Change Request shall be submitted that meets the following criteria:

1) The Project Manager shall draft a written Change Request for review and approval by the City Manager to include:
   (a) the name of the person requesting the change;
   (b) a summary of the required change;
   (c) the start date for the change;
   (d) the reason and necessity for change;
   (e) the elements to be altered; and

(f) The impact of the change.

2) The City Manager shall provide a written decision on the Change Request to the Contractor within a maximum of ten (10) Business Days of receipt of the Change Request. All decisions made by the City Manager are final. Change Requests, once approved, become a part of the Agreement and become binding as a part of the original Agreement.

16. Merger.

This Agreement incorporates all the Agreements, covenants and understandings between the parties hereto concerning the subject matter hereof, and all such covenants, Agreements and understandings have been merged into this written Agreement. No prior Agreement or understanding, oral or otherwise, of the parties or their agents shall be valid or enforceable unless embodied in this Agreement.

17. Penalties for violation of law.

The Procurement Code, Sections 13-1-28 through 13-1-199, NMSA 1978, imposes civil and criminal penalties for its violation. In addition, the New Mexico criminal statutes imposefelony penalties for illegal bribes, gratuities and kickbacks.

18. Equal Opportunity Compliance.

The Contractor agrees to abide by all federal and state laws and rules and regulations, andSanta Fe City Code, pertaining to equal employment opportunity. In accordance with all such laws of the State of New Mexico, the Contractor assures that no person in the United States shall, on the grounds of race, religion, color, national origin, ancestry, sex, age, physical or mental handicap, or serious medical condition, spousal affiliation, sexual orientation or gender identity, be excluded from employment with or participation in, be denied the benefits of, or be otherwise subjected to discrimination under any program or activity performed under this Agreement. If Contractor is found not to be in compliance with these requirements during the life of this Agreement, Contractor agrees to take appropriate steps to correct these deficiencies.

19. Applicable Law.

The laws of the State of New Mexico shall govern this Agreement, without giving effect to its choice of law provisions. Venue shall be proper only in a New Mexico court of competent jurisdiction in accordance with Section 38-3-1 (G) NMSA 1978. By execution of this Agreement, Contractor acknowledges and agrees to the jurisdiction of the courts of the State of New Mexicoover any and all lawsuits arising under or out of any term of this Agreement.

20. Workers Compensation.

The Contractor agrees to comply with state laws and rules applicable to workers compensation benefits for its employees. If the Contractor fails to comply with the Workers Compensation Act and applicable rules when required to do so, this Agreement may be terminated by the City.

21. Professional Liability Insurance. Contractor shall maintain professional liability insurance throughout the term of this Agreement providing a minimum coverage in the amount required under the New Mexico Tort Claims Act. The Contractor shall furnish the City with proofof insurance of Contractor's compliance with the provisions of this section as a condition prior toperforming services under this Agreement.

22. Other Insurance

If the Services contemplated under this Agreement will be performed on or in City facilitiesor property, Contractor shall maintain in force during the entire term of this Agreement, the following insurance coverage(s), naming the City as additional insured,

A. Commercial General Liability insurance shall be written on an occurrence basis and be a broad as ISO Form CG 00 01 with limits not less than $2,000,000 per occurrence and #2,000,000 in the aggregate for claims against bodily injury, personal and advertising injury, and property damage. Said policy shall include broad from Contractual Liability coverage and be endorsed to name the City of Santa Fe, their officials, officers, employees and agents as additionalinsureds.

B. Business Automobile Liability insurance for all owned, non-owned automobiles,with a combined single limit not less than $1,000,000 per accident.

C. Broader Coverage and Limits. The insurance requirements under this Agreement shall be the greater of (1) the minimum coverage and limits specified in this Agreement, or (2) the broader coverage and maximum limits of coverage of any insurance policy or proceeds available tothe Named Insured. It is agreed that these insurance requirements shall not in any way act to reduce coverage that is broader or that includes higher limits than the minimums required herein. No representation is made that minimum insurance requirements of this Agreement are sufficient to cover the obligations of Contractor hereunder.

D. Contractor shall maintain the above insurance for the term of this Agreement and name the City as an additional insured and provide for 30 days cancellation notice on any Certificate of Insurance form furnished by Contractor. Such certificate shall also specifically state the coverage provided under the policy is primary over any other valid and collectible insurance and provide a waiver of subrogation.

23. Records and Financial Audit.

The Contractor shall maintain detailed time and expenditure records that indicate the date; time, nature and cost of services rendered during the Agreement's term and effect and retain them for a period of three (3) years from the date of final payment under this Agreement. The records shall be subject to inspection by the City. The City shall have the right to audit bi11ings both before and after payment. Payment under this Agreement shall not foreclose the right of the City to recover excessive or illegal payments.

24. Indemnification.

The Contractor shall defend, indemnify and hold harmless the City from all actions, proceeding, claims, demands, costs, damages, attorney's fees and all other liabilities and expenses of any kind from any source which may arise out of the performance of this Agreement, caused by the negligent act or failure to act of the Contractor, its officers, employees, servants, subcontractors or agents, or if caused by the actions of any client of the Contractor resulting in injury or damageto persons or property during the time when the Contractor or any officer, agent, employee, servantor subcontractor thereof has or is performing services pursuant to this Agreement. In the event that any action, suit or proceeding related to the services performed by the Contractor or any officer, agent, employee, servant or subcontractor under this Agreement is brought against the Contractor,the Contractor shall, as soon as practicable but no later than two (2) days after it receives notice thereof, notify the legal counsel of the City.

25. New Mexico Tort Claims Act

Any liability incurred by the City of Santa Fe in connection with this Agreement is subjectto the immunities and limitations of the New Mexico Tort Claims Act, Section 41-4-1, et. seq.NMSA 1978, as

amended. The city and its "public employees" as defined in the New Mexico Tort Claims Act, do not waive sovereign immunity, do not waive any defense and do not waive anylimitation of liability pursuant to law. No provision in this Agreement modifies or waives any provision of the New Mexico Tort Claims Act.

26. Invalid Term or Condition.

If any term or condition of this Agreement shall be held invalid or unenforceable, the remainder of this Agreement shall not be affected and shall be valid and enforceable.

27. Enforcement of Agreement.

A party's failure to require strict performance of any provision of this Agreement shall notwaive or diminish that party's right thereafter to demand strict compliance with that or any other provision. No waiver by a party of any of its rights under this Agreement shall be effective unlessexpress and in writing, and no effective waiver by a party of any of its rights shall be effective to waive any other rights.

28. Notices.

Any notice required to be given to either party by this Agreement shall be in writing andshall be delivered in person, by courier service or by U.S. mail, either first class or certified, return receipt requested, postage prepaid, as follows:

To the City:
Water Division Director
801 W. San Mateo
Santa Fe, NM 87505

To the Contractor:
Sub Surface Contracting Inc.
27 A Paseo de River
Santa Fe, NM 87507

29. Authority.

If Contractor is other than a natural person, the individual(s) signing this Agreement on behalf of Contractor represents and warrants that he or she has the power and authority to bindContractor, and that no further action, resolution, or approval from Contractor is necessary to enterinto a binding contract.

IN WITNESS WHEREOF, the Parties have executed this Agreement as of the date of the signatureby the required approval authorities below.

CITY OF SANTA FE:

ALAN WEBBER, MAYOR

DATE: Sep 10, 2021

CONTRACTOR:

Neal Keiper
Neal Keiper (Aug 19, 2021 13:26 MDT)
NAME

President
TITLE

DATE: Aug 19, 2021

CRS# 02104256000
Registration # 46991

ATTEST:

Kristine Mihelcic
Kristine Mihelcic (Sep 15, 2021 12:12 MDT)

KRISTINE BUSTOS MIHELCIC, CITY CLERK
GB MTG 09/08/2021

CITY ATTORNEY'S OFFICE:

Marcos Martinez
Marcos Martinez (Aug 19, 2021 10:05 MDT)

SENIOR ASSISTANT CITY ATTORNEY

APPROVED FOR FINANCES:

Mary McCoy

MARY MCCOY, FINANCE DIRECTOR

5050395.572970
Org. Name/Org#

AJH
AJH

				AAC		Sub Surface	
Bid Item	Approx. QTY.	Unit	Article and Description	Unit Price	Item Price	Unit Price	Item Price
5	35	LF	2" PVC Water Main, cip, all lengths	$ 32.50	$ 1,137.50	$ 30.00	$ 1,050.00
10	35	LF	4" PVC Water Main, cip, <100'	$ 38.00	$ 1,330.00	$ 36.00	$ 1,260.00
15	100	LF	4" PVC Water Main, cip, >100'	$ 36.00	$ 3,600.00	$ 34.00	$ 3,400.00
20	50	LF	6" PVC Water Main, cip, <100'	$ 43.50	$ 2,175.00	$ 42.00	$ 2,100.00
25	150	LF	6" PVC Water Main, cip, >100'	$ 40.50	$ 6,075.00	$ 39.00	$ 5,850.00
30	75	LF	8" PVC Water Main, cip, <100'	$ 49.00	$ 3,675.00	$ 48.00	$ 3,600.00
35	200	LF	8" PVC Water Main, cip, >100'	$ 46.75	$ 9,350.00	$ 45.50	$ 9,100.00
40	35	LF	10" PVC Water Main, cip, <100'	$ 56.00	$ 1,960.00	$ 52.00	$ 1,820.00
45	100	LF	10" PVC Water Main, cip, >100'	$ 52.00	$ 5,200.00	$ 49.00	$ 4,900.00
50	50	LF	12" PVC Water Main, cip, <100'	$ 69.37	$ 3,468.50	$ 66.75	$ 3,337.50
55	150	LF	12" PVC Water Main, cip, >100'	$ 66.25	$ 9,937.50	$ 64.50	$ 9,675.00
60	50	LF	14" PVC Water Main, cip	$ 87.00	$ 4,350.00	$ 79.00	$ 3,950.00
65	50	LF	16" PVC Water Main, cip	$ 103.50	$ 5,175.00	$ 97.00	$ 4,850.00
70	50	LF	24" PVC Water Main, cip	$ 167.50	$ 8,375.00	$ 100.00	$ 5,000.00
75	35	LF	2" DI Water Main, cip, all lengths	$ 42.00	$ 1,470.00	$ -	$ -
80	50	LF	4" DI Water Main, cip, <100'	$ 63.75	$ 3,187.50	$ 57.50	$ 2,875.00
85	100	LF	4" DI Water Main, cip, >100'	$ 56.50	$ 5,650.00	$ 56.00	$ 5,600.00
90	75	LF	6" DI Water Main, cip, <100'	$ 63.50	$ 4,762.50	$ 53.00	$ 3,975.00
95	250	LF	6" DI Water Main, cip, >100'	$ 56.50	$ 14,125.00	$ 51.00	$ 12,750.00
100	75	LF	8" DI Water Main, cip, <100'	$ 68.00	$ 5,100.00	$ 60.25	$ 4,518.75
105	250	LF	8" DI Water Main, cip, >100'	$ 73.00	$ 18,250.00	$ 58.00	$ 14,500.00
110	35	LF	10" DI Water Main, cip, <100'	$ 77.00	$ 2,695.00	$ 65.00	$ 2,275.00
115	100	LF	10" DI Water Main, cip, >100'	$ 74.00	$ 7,400.00	$ 63.00	$ 6,300.00
120	50	LF	12" DI Water Main, cip, <100'	$ 99.00	$ 4,950.00	$ 78.00	$ 3,900.00
125	100	LF	12" DI Water Main, cip, >100'	$ 89.50	$ 8,950.00	$ 74.00	$ 7,400.00
130	50	LF	14" DI Water Main, cip	$ 115.50	$ 5,775.00	$ 87.00	$ 4,350.00
135	50	LF	16" DI Water Main, cip	$ 139.50	$ 6,975.00	$ 101.00	$ 5,050.00
140	50	LF	24" DI Water Main, cip	$ 207.00	$ 10,350.00	$ 159.00	$ 7,950.00
145	75	LF	Extra Pay for Trench Depth, 6'-8'	$ 41.00	$ 3,075.00	$ 8.00	$ 600.00
150	50	LF	Extra Pay for Trench Depth, 8'-10'	$ 98.00	$ 4,900.00	$ 12.00	$ 600.00
155	25	LF	Extra Pay for Trench Depth, 10'-14'	$ 154.00	$ 3,850.00	$ 30.00	$ 750.00
160	20	CY	Rock Excavation	$ 325.00	$ 6,500.00	$ 220.00	$ 4,400.00
165	300	CY	Exploratory Excavation (as SDCW Approved)	$ 50.00	$ 15,000.00	$ 65.00	$ 19,500.00
170	75	CY	Imported Backfill (as SDCW Approved)	$ 36.00	$ 2,700.00	$ 24.00	$ 1,800.00
175	1,000	LB	Fitting Installation	$ 4.50	$ 4,500.00	$ 4.00	$ 4,000.00
180	500	LB	Fitting Insertion	$ 26.00	$ 13,000.00	$ 34.00	$ 17,000.00
185	25	EA	4" Retainer Ring/ Bolt on Flange	$ 60.00	$ 1,500.00	$ 65.00	$ 1,625.00
190	50	EA	6" Retainer Ring/ Bolt on Flange	$ 86.50	$ 4,325.00	$ 105.00	$ 5,250.00
195	50	EA	8" Retainer Ring/ Bolt on Flange	$ 98.50	$ 4,925.00	$ 119.00	$ 5,950.00
200	20	EA	10" Retainer Ring/ Bolt on Flange	$ 123.00	$ 2,460.00	$ 121.00	$ 2,420.00
205	20	EA	12" Retainer Ring/ Bolt on Flange	$ 147.50	$ 2,950.00	$ 145.00	$ 2,900.00
210	20	EA	14" Retainer Ring/ Bolt on Flange	$ 184.50	$ 3,690.00	$ 179.00	$ 3,580.00
215	10	EA	16" Retainer Ring/ Bolt on Flange	$ 275.00	$ 2,750.00	$ 250.00	$ 2,500.00
220	25	EA	4"Joint Harness	$ 70.50	$ 1,762.50	$ 40.00	$ 1,000.00
225	50	EA	6" Joint Harness	$ 95.00	$ 4,750.00	$ 110.00	$ 5,500.00
230	50	EA	8" Joint Harness	$ 125.00	$ 6,250.00	$ 120.00	$ 6,000.00
235	20	EA	10" Joint Harness	$ 160.00	$ 3,200.00	$ 160.00	$ 3,200.00
240	20	EA	12" Joint Harness	$ 192.50	$ 3,850.00	$ 180.00	$ 3,600.00
245	20	EA	14" Joint Harness	$ 370.00	$ 7,400.00	$ 375.00	$ 7,500.00
250	10	EA	16" Joint Harness	$ 427.50	$ 4,275.00	$ 410.00	$ 4,100.00
255	10	CY	Concrete Thrust Blocking (as SDCW Approved)	$ 315.00	$ 3,150.00	$ 250.00	$ 2,500.00
260	2	EA	Tapping Sleeve w/ Tap, 4" X 4"	$ 1,350.00	$ 2,700.00	$ 1,350.00	$ 2,700.00
265	4	EA	Tapping Sleeve w/ Tap, 6" X 4" - 6"	$ 1,567.50	$ 6,270.00	$ 1,500.00	$ 6,000.00
270	4	EA	Tapping Sleeve w/ Tap, 8" X 4" - 8"	$ 1,900.00	$ 7,600.00	$ 1,800.00	$ 7,200.00

				AAC		Sub Surface	
Bid Item	Approx. QTY.	Unit	Article and Description	Unit Price	Item Price	Unit Price	Item Price
275	2	EA	Tapping Sleeve w/ Tap, 10" X 4" - 10"	$ 2,250.00	$ 4,500.00	$ 2,100.00	$ 4,200.00
280	4	EA	Tapping Sleeve w/ Tap, 12" X 4" - 12"	$ 2,650.00	$ 10,600.00	$ 2,300.00	$ 9,200.00
285	1	EA	Tapping Sleeve w/Tap, 20" X 4" - 20"	$ 4,747.50	$ 4,747.50	$ 4,200.00	$ 4,200.00
290	1	EA	Non-Pressurized Connections, 2" line	$ 1,650.00	$ 1,650.00	$ 1,500.00	$ 1,500.00
295	1	EA	Non-Pressurized Connections, 4"-10" line	$ 3,587.50	$ 3,587.50	$ 3,100.00	$ 3,100.00
300	1	EA	Non-Pressurized Connections, 12"-20" line	$ 6,050.00	$ 6,050.00	$ 4,100.00	$ 4,100.00
305	2	EA	2" CL125 Gate Valves, cip.	$ 807.50	$ 1,615.00	$ 850.00	$ 1,700.00
310	2	EA	4" CL125 Gate Valves, cip.	$ 925.00	$ 1,850.00	$ 1,200.00	$ 2,400.00
315	5	EA	6" CL125 Gate Valves, cip.	$ 1,200.00	$ 6,000.00	$ 1,525.00	$ 7,625.00
320	5	EA	8" CL125 Gate Valves, cip.	$ 1,650.00	$ 8,250.00	$ 1,725.00	$ 8,625.00
325	1	EA	10" CL125 Gate Valves, cip.	$ 2,315.00	$ 2,315.00	$ 2,325.00	$ 2,325.00
330	2	EA	12" CL125 Gate Valves, cip.	$ 2,900.00	$ 5,800.00	$ 2,800.00	$ 5,600.00
335	1	EA	2" CL250 Gate Valves, cip.	$ 792.50	$ 792.50	$ 700.00	$ 700.00
340	1	EA	4" CL250 Gate Valves, cip.	$ 1,837.50	$ 1,837.50	$ 1,800.00	$ 1,800.00
345	10	EA	6" CL250 Gate Valves, cip.	$ 1,950.00	$ 19,500.00	$ 1,825.00	$ 18,250.00
350	3	EA	8" CL250 Gate Valves, cip.	$ 2,475.00	$ 7,425.00	$ 2,000.00	$ 6,000.00
355	1	EA	10" CL250 Gate Valves, cip.	$ 4,000.00	$ 4,000.00	$ 3,700.00	$ 3,700.00
360	1	EA	12" CL250 Gate Valves, cip.	$ 4,552.50	$ 4,552.50	$ 4,200.00	$ 4,200.00
365	1	EA	16" CL250 Gate Valves, cip.	$ 7,025.00	$ 7,025.00	$ 6,500.00	$ 6,500.00
370	1	EA	20" CL250 Gate Valves, cip.	$ 16,755.00	$ 16,755.00	$ 16,190.00	$ 16,190.00
375	1	EA	24" CL250 Gate Valves, cip.	$ 23,750.00	$ 23,750.00	$ 23,250.00	$ 23,250.00
380	1	EA	12" CL250 Butterfly Valves, cip.	$ 2,800.00	$ 2,800.00	$ 2,800.00	$ 2,800.00
385	1	EA	16" CL250 Butterfly Valves, cip.	$ 4,975.00	$ 4,975.00	$ 4,850.00	$ 4,850.00
390	1	EA	20" CL250 Butterfly Valves, cip.	$ 7,680.00	$ 7,680.00	$ 6,600.00	$ 6,600.00
395	1	EA	24" CL250 Butterfly Valves, cip.	$ 10,042.50	$ 10,042.50	$ 9,125.00	$ 9,125.00
400	5	EA	Fire Hydrant, 5' or less bury, cip.	$ 2,987.50	$ 14,937.50	$ 3,200.00	$ 16,000.00
405	2	EA	Fire Hydrant Extension, 6" or 12" length	$ 767.50	$ 1,535.00	$ 700.00	$ 1,400.00
410	1	EA	Fire Hydrant Extension, 18" or 24" length	$ 1,017.50	$ 1,017.50	$ 920.00	$ 920.00
415	1	EA	Fire Hydrant Remove & Relay	$ 1,350.00	$ 1,350.00	$ 700.00	$ 700.00
420	1	EA	Fire Hydrant Remove & Return	$ 887.50	$ 887.50	$ 575.00	$ 575.00
425	1	EA	2 1/4" Flush Hydrant	$ 1,657.50	$ 1,657.50	$ 1,500.00	$ 1,500.00
430	1	EA	2" Blow-Off Valve Installation	$ 1,420.00	$ 1,420.00	$ 1,300.00	$ 1,300.00
435	1	EA	2" Pressure Relief Valve, cip.	$ 6,780.00	$ 6,780.00	$ 6,725.00	$ 6,725.00
440	1	EA	3" Pressure Relief Valve, cip.	$ 7,065.50	$ 7,065.50	$ 6,950.00	$ 6,950.00
445	1	EA	4" Pressure Relief Valve, cip.	$ 8,432.50	$ 8,432.50	$ 8,195.00	$ 8,195.00
450	1	EA	6" Pressure Relief Valve, cip.	$ 11,091.50	$ 11,091.50	$ 10,800.00	$ 10,800.00
455	1	EA	8" Pressure Relief Valve, cip.	$ 15,362.50	$ 15,362.50	$ 14,925.00	$ 14,925.00
460	1	EA	12" Pressure Relief Valve, cip.	$ 29,837.50	$ 29,837.50	$ 29,500.00	$ 29,500.00
465	1	EA	Air & Vacuum Release Valve, 1"	$ 2,970.00	$ 2,970.00	$ 2,750.00	$ 2,750.00
470	1	EA	Air & Vacuum Release Valve, 2"	$ 4,245.00	$ 4,245.00	$ 3,940.00	$ 3,940.00
475	1	EA	Install City of Santa Fe Furnished Valve/Meter, 2" - 4"	$ 825.00	$ 825.00	$ 450.00	$ 450.00
480	1	EA	Install City of Santa Fe Furnished Valve/Meter, 6" - 8"	$ 1,025.00	$ 1,025.00	$ 550.00	$ 550.00
485	1	EA	Install City of Santa Fe Furnished Valve/Meter, 10"-12"	$ 1,275.00	$ 1,275.00	$ 750.00	$ 750.00
490	1	EA	Metered 2" Bypass – Vault Installation	$ 4,000.00	$ 4,000.00	$ 3,185.00	$ 3,185.00
495	20	EA	Valve Box, cip.	$ 575.00	$ 11,500.00	$ 625.00	$ 12,500.00
500	5	EA	Valve Box Replacement	$ 750.00	$ 3,750.00	$ 775.00	$ 3,875.00
505	5	EA	Valve Box Removal of Existing	$ 425.00	$ 2,125.00	$ 325.00	$ 1,625.00
510	3	EA	Valve Box Adjustment	$ 600.00	$ 1,800.00	$ 550.00	$ 1,650.00
515	1	EA	Valve Stem Extension, 0'-4' Depth	$ 200.00	$ 200.00	$ 250.00	$ 250.00
520	4	VF	Precast 4' Diameter Pit w/ Lid Min. 4' Depth	$ 925.00	$ 3,700.00	$ 825.00	$ 3,300.00
525	8	VF	Precast 6' Diameter Pit w/ Lid Min. 4' Depth	$ 1,000.00	$ 8,000.00	$ 1,050.00	$ 8,400.00
530	8	VF	Precast 8' Diameter Pit w/ Lid Min. 4' Depth	$ 1,500.00	$ 12,000.00	$ 1,075.00	$ 8,600.00
535	7	CY	Cast-In-Place RCP Vault w/ Lid	$ 1,000.00	$ 7,000.00	$ 1,025.00	$ 7,175.00
540	1	EA	Prefabricated Vault, 4' X 8'	$ 8,900.00	$ 8,900.00	$ 8,995.00	$ 8,995.00

				AAC		Sub Surface	
Bid Item	**Approx. QTY.**	**Unit**	**Article and Description**	**Unit Price**	Item Price	**Unit Price**	Item Price
545	1	ACRE	Native Seeding	**$ 2,600.00**	$ 2,600.00	**$ 2,275.00**	$ 2,275.00
550	1	EA	Bollards (pair)	**$ 1,180.00**	$ 1,180.00	**$ 975.00**	$ 975.00
555	18	LF	4" Steel Casing	**$ 31.37**	$ 564.66	**$ 95.00**	$ 1,710.00
560	18	LF	4" PVC Casing	**$ 15.40**	$ 277.20	**$ 75.00**	$ 1,350.00
565	18	LF	14" Steel Casing	**$ 107.43**	$ 1,933.74	**$ 175.00**	$ 3,150.00
570	18	LF	16" Steel Casing	**$ 124.02**	$ 2,232.36	**$ 200.00**	$ 3,600.00
575	18	LF	18" Steel Casing	**$ 144.03**	$ 2,592.54	**$ 275.00**	$ 4,950.00
580	18	LF	22" Steel Casing	**$ 234.94**	$ 4,228.92	**$ 300.00**	$ 5,400.00
585	18	LF	26" Steel Casing	**$ 290.67**	$ 5,232.06	**$ 400.00**	$ 7,200.00
590	18	LF	28" Steel Casing	**$ 187.04**	$ 3,366.72	**$ 450.00**	$ 8,100.00
595	18	LF	30" Steel Casing	**$ 187.04**	$ 3,366.72	**$ 450.00**	$ 8,100.00
600	18	LF	36" Steel Casing	**$ 287.03**	$ 5,166.54	**$ 500.00**	$ 9,000.00
605	50	DIA-IN- LF	Bore & Jack Casing Pipe	**$ 575.00**	$ 28,750.00	**$ 40.00**	$ 2,000.00
610	18	LF	Open Cut Casing Pipe Installation, < 6' Deep	**$ 62.00**	$ 1,116.00	**$ 39.00**	$ 702.00
615	25	SY	Asphalt Pavement Removal & Disposal, <2”	**$ 29.50**	$ 737.50	**$ 65.00**	$ 1,625.00
620	200	SY	Asphalt Pavement Removal & Disposal, 2”-6”	**$ 17.70**	$ 3,540.00	**$ 65.00**	$ 13,000.00
625	10	SY	Concrete Pavement Removal & Disposal, <2”	**$ 97.50**	$ 975.00	**$ 90.00**	$ 900.00
630	10	SY	Concrete Pavement Removal & Disposal, 2”-6”	**$ 132.50**	$ 1,325.00	**$ 95.00**	$ 950.00
635	50	LF	Concrete Curb and Gutter Removal & Disposal	**$ 12.00**	$ 600.00	**$ 25.00**	$ 1,250.00
640	10	SY	Concrete Sidewalk Removal & Disposal	**$ 65.00**	$ 650.00	**$ 30.00**	$ 300.00
645	50	SY	Replace City Street Pavement w/o Laydown Machine, Virgin Asphalt	**$ 74.50**	$ 3,725.00	**$ 75.00**	$ 3,750.00
650	50	SY	Replace City Street Pavement w/o Laydown Machine, Recycled Asphalt	**$ 74.50**	$ 3,725.00	**$ 75.00**	$ 3,750.00
655	50	SY	Replace City Street Pavement with Laydown Machine, Virgin Asphalt	**$ 72.00**	$ 3,600.00	**$ 75.00**	$ 3,750.00
660	10	SY	Replace City Street Pavement with Laydown Machine, Recycled Asphalt	**$ 84.96**	$ 849.60	**$ 75.00**	$ 750.00
665	10	SY	Replace City Street Pavement with Temporary Cold Mix	**$ 167.56**	$ 1,675.60	**$ 75.00**	$ 750.00
670	100	SY	Replace Non-City Street Pavement w/o Laydown Machine, Virgin Asphalt	**$ 74.50**	$ 7,450.00	**$ 75.00**	$ 7,500.00
675	10	SY	Replace Non-City Street Pavement w/o Laydown Machine, Recycled Asphalt	**$ 74.50**	$ 745.00	**$ 75.00**	$ 750.00
680	10	SY	Replace Non-City Street Pavement with Laydown Machine, Virgin Asphalt	**$ 92.00**	$ 920.00	**$ 75.00**	$ 750.00
685	10	SY	Replace Non-City Street Pavement with Laydown Machine, Recycled Asphalt	**$ 92.00**	$ 920.00	**$ 75.00**	$ 750.00
690	1	SY	Replace Non-City Street Pavement with Temporary Cold Mix	**$ 167.56**	$ 167.56	**$ 75.00**	$ 75.00
695	10	SY	Replace Concrete Pavement	**$ 261.50**	$ 2,615.00	**$ 275.00**	$ 2,750.00
700	50	LF	Replace Concrete Curb & Gutter	**$ 45.00**	$ 2,250.00	**$ 45.00**	$ 2,250.00
705	10	SY	Replace Concrete Sidewalk	**$ 155.00**	$ 1,550.00	**$ 170.00**	$ 1,700.00
710	10	CY	Replace Gravel Surface, 0”-2”	**$ 56.00**	$ 560.00	**$ 85.00**	$ 850.00
715	10	CY	Replace Gravel Surface, 2”-4”	**$ 66.00**	$ 660.00	**$ 120.00**	$ 1,200.00
720	150	SY	Base course/Gravel (crushed or landscape), 0’-3”	**$ 34.00**	$ 5,100.00	**$ 35.00**	$ 5,250.00
725	50	SY	Base course/Gravel (crushed or landscape), 3”-6”	**$ 45.00**	$ 2,250.00	**$ 45.00**	$ 2,250.00
730	4	EA	Service, 3/4" Single, New Main	**$ 1,262.50**	$ 5,050.00	**$ 1,475.00**	$ 5,900.00
735	2	EA	Service, 3/4" Double, New Main	**$ 1,662.50**	$ 3,325.00	**$ 1,775.00**	$ 3,550.00
740	2	EA	Service, 1", New Main	**$ 1,887.50**	$ 3,775.00	**$ 1,825.00**	$ 3,650.00
745	1	EA	Service, 1 1/2", New Main	**$ 3,670.00**	$ 3,670.00	**$ 3,450.00**	$ 3,450.00
750	1	EA	Service, 2", New Main	**$ 3,985.00**	$ 3,985.00	**$ 3,870.00**	$ 3,870.00
755	5	EA	Service, 3/4" Single, Existing Main	**$ 1,450.00**	$ 7,250.00	**$ 1,475.00**	$ 7,375.00
760	2	EA	Service, 3/4" Double, Existing Main	**$ 1,912.50**	$ 3,825.00	**$ 1,775.00**	$ 3,550.00
765	1	EA	Service, 1", Existing Main	**$ 1,900.00**	$ 1,900.00	**$ 1,825.00**	$ 1,825.00
770	1	EA	Service, 1 1/2", Existing Main	**$ 3,670.00**	$ 3,670.00	**$ 3,450.00**	$ 3,450.00
775	1	EA	Service, 2", Existing Main	**$ 4,300.00**	$ 4,300.00	**$ 3,870.00**	$ 3,870.00
780	5	EA	Service Replacement, 3/4"	**$ 1,602.50**	$ 8,012.50	**$ 1,475.00**	$ 7,375.00
785	2	EA	Service Replacement, Double, 3/4"	**$ 1,950.00**	$ 3,900.00	**$ 1,775.00**	$ 3,550.00
790	1	EA	Service Replacement, 1”	**$ 2,100.00**	$ 2,100.00	**$ 1,825.00**	$ 1,825.00

				AAC		Sub Surface	
Bid Item	**Approx. QTY.**	**Unit**	**Article and Description**	**Unit Price**	Item Price	**Unit Price**	Item Price
795	1	EA	Service Replacement, 1 1/2"	**$ 3,875.00**	$ 3,875.00	**$ 3,450.00**	$ 3,450.00
800	1	EA	Service Replacement, 2"	**$ 4,512.00**	$ 4,512.00	**$ 3,870.00**	$ 3,870.00
805	3	EA	Meter Box Relocation/Replacement, 3/4"	**$ 1,000.00**	$ 3,000.00	**$ 895.00**	$ 2,685.00
810	1	EA	Meter Box Relocation/Replacement, 1"	**$ 1,150.00**	$ 1,150.00	**$ 915.00**	$ 915.00
815	1	EA	Meter Box Relocation/Replacement, 1-1/2"	**$ 1,800.00**	$ 1,800.00	**$ 1,400.00**	$ 1,400.00
820	1	EA	Meter Box Relocation/Replacement, 2"	**$ 1,900.00**	$ 1,900.00	**$ 1,400.00**	$ 1,400.00
825	5	EA	Service Transfer, 3/4"	**$ 812.50**	$ 4,062.50	**$ 725.00**	$ 3,625.00
830	2	EA	Service Transfer, 1"	**$ 912.50**	$ 1,825.00	**$ 825.00**	$ 1,650.00
835	1	EA	Service Transfer, 1 1/2"	**$ 1,112.50**	$ 1,112.50	**$ 925.00**	$ 925.00
840	1	EA	Service Transfer at Main, 2"	**$ 1,325.00**	$ 1,325.00	**$ 975.00**	$ 975.00
845	1	EA	Retire Existing Service at Main, 3/4"- 2"	**$ 962.50**	$ 962.50	**$ 725.00**	$ 725.00
850	1	EA	Retire Existing Meter Box & Setting	**$ 437.50**	$ 437.50	**$ 525.00**	$ 525.00
855	1	EA	Adjust Meter Box To Grade	**$ 412.50**	$ 412.50	**$ 425.00**	$ 425.00
860	11	EA	Service Saddle, 3/4" Tap, 4"-12" Main	**$ 500.00**	$ 5,500.00	**$ 650.00**	$ 7,150.00
865	4	EA	Service Saddle, 1" Tap, 4"-12" Main	**$ 462.50**	$ 1,850.00	**$ 675.00**	$ 2,700.00
870	3	EA	Service Saddle, 1 1/2" Tap, 4"-12" Main	**$ 562.50**	$ 1,687.50	**$ 750.00**	$ 2,250.00
875	3	EA	Service Saddle, 2" Tap, 4"-12" Main	**$ 650.00**	$ 1,950.00	**$ 775.00**	$ 2,325.00
880	100	LF	Service Tubing, 3/4"	**$ 28.75**	$ 2,875.00	**$ 31.50**	$ 3,150.00
885	100	LF	Service Tubing, 1"	**$ 34.12**	$ 3,412.00	**$ 33.75**	$ 3,375.00
890	100	LF	Service Tubing, 1 1/2"	**$ 46.50**	$ 4,650.00	**$ 44.00**	$ 4,400.00
895	25	LF	Service Tubing, 2"	**$ 65.50**	$ 1,637.50	**$ 53.00**	$ 1,325.00
900	1	EA	Air and Vacuum Valve (individual)	**$ 450.00**	$ 450.00	**$ 1,550.00**	$ 1,550.00
905	1	GROUP OF 10	Air and Vacuum Valves	**$ 8,045.00**	$ 8,045.00	**$ 15,500.00**	$ 15,500.00
910	1	EA	Automatic Flushing Valve	**$ 5,867.50**	$ 5,867.50	**$ 4,350.00**	$ 4,350.00
915	$20,000	%	Materials Mark-Up Over Invoice	**$ 3,600.00**	$ 3,600.00	**$ 1,500.00**	$ 1,500.00
920	$8,000	%	Traffic Control Mark-Up Over Invoice	**$ 1,440.00**	$ 1,440.00	**$ 1,200.00**	$ 1,200.00
925	1	Allow.	Street-Cut Permits	**$ 175.00**	$ 175.00	**$ 375.00**	$ 375.00
930	1	EA	Project Signs	**$ 675.00**	$ 675.00	**$ 450.00**	$ 450.00
935	10	HR	Archeological Required Delay (after 2 hrs.)	**$ 250.00**	$ 2,500.00	**$ 185.00**	$ 1,850.00
940	1	LS	Archeological Required Mob/Demob	**$ 725.00**	$ 725.00	**$ 700.00**	$ 700.00
EMERGENCY REPAIR					$ -		$ -
9000	175	HR	Supervisor's Truck with tools	**$ 35.00**	$ 6,125.00	**$ 30.00**	$ 5,250.00
9100	80	HR	Backhoe/Skid Steer	**$ 57.00**	$ 4,560.00	**$ 58.00**	$ 4,640.00
9200	8	HR	Compressor with tools	**$ 54.00**	$ 432.00	**$ 35.00**	$ 280.00
9300	16	HR	Dump Truck	**$ 65.00**	$ 1,040.00	**$ 60.00**	$ 960.00
9400	4	HR	Pump	**$ 25.00**	$ 100.00	**$ 15.00**	$ 60.00
9500	300	HR	Laborer	**$ 42.50**	$ 12,750.00	**$ 43.00**	$ 12,900.00
9600	200	HR	Pipe Fitter	**$ 44.50**	$ 8,900.00	**$ 45.00**	$ 9,000.00
9700	200	HR	Equipment Operator	**$ 57.50**	$ 11,500.00	**$ 58.00**	$ 11,600.00
9800	175	HR	Foreman	**$ 59.50**	$ 10,412.50	**$ 60.00**	$ 10,500.00
9900	$5,000	%	Rental Items Mark-Up Over Invoice (multiply $5,000 x your % for Item Price)	**$ 1,000.00**	$ 1,000.00	**$ 900.00**	$ 900.00
9950	$20,000	%	Materials Mark-Up Over Invoice (multiply $20,000 x your 5 for Item Price)	**$ 3,600.00**	$ 3,600.00	**$ 1,500.00**	$ 1,500.00

Signature: Michael Moya
Michael Moya (Aug 18, 2021 07:37 MDT)

Email: mrmoya@ci.santa-fe.nm.us

City of Santa Fe

Real Estate Summary of Contracts, Agreements, Amendments & Leases

Section to be completed by department

1. Munis Contract # **3202929**

Contractor: **Sub Surface Contracting**

Description: **CIP# 3058 Priority Line Replacement**

Contract ☐ Agreement ☉ Lease / Rent ☐ Amendment ☐

Term Start Date: **as approved** Term End Date: **6/30/25**

☑ Approved by Council Date: **Pending**

Contract / Lease: **Contract $2,250,000**

Amendment # _____ to the Original Contract / Lease # _____

Increase/(Decrease) Amount $ _____

Extend Termination Date to: _____

☐ Approved by Council Date: _____

Amendment is for:

2. **HISTORY** of Contract, Amendments & Lease / Rent - **Please Elaborate** (option: attach spreadsheet if multiple amendments)

3. **Procurement History:** **21/43/B**

Fran Dr[illegible]away (Aug 23, 2021 12:29 MDT) Aug 23, 2021

Purchasing Officer Review: Date:

Comment & Exceptions: Issuance of award from ITB 21/43/B. 1st. year.

4. **Funding Source:** **Water Enterprise Fund CIP** **Org / Object:** **5050395.572970**

Andy Hopkins Aug 23, 2021

Andy Hopkins (Aug 23, 2021 11:13 MDT)

Budget Officer Approval: Date:

Comment & Exceptions: _____

Staff Contact who completed this form: **Maya Martinez** Phone # **4271**

Email: **mfmartinez@santafenm.gov**

To be recorded by City Clerk:

Clerk # _____

Date of Execution: _____

SUBSURF-01 DONISCHUK

CERTIFICATE OF LIABILITY INSURANCE

DATE (MM/DD/YYYY) 5/20/2021

THIS CERTIFICATE IS ISSUED AS A MATTER OF INFORMATION ONLY AND CONFERS NO RIGHTS UPON THE CERTIFICATE HOLDER. THIS CERTIFICATE DOES NOT AFFIRMATIVELY OR NEGATIVELY AMEND, EXTEND OR ALTER THE COVERAGE AFFORDED BY THE POLICIES BELOW. THIS CERTIFICATE OF INSURANCE DOES NOT CONSTITUTE A CONTRACT BETWEEN THE ISSUING INSURER(S), AUTHORIZED REPRESENTATIVE OR PRODUCER, AND THE CERTIFICATE HOLDER.

IMPORTANT: If the certificate holder is an ADDITIONAL INSURED, the policy(ies) must have ADDITIONAL INSURED provisions or be endorsed. If SUBROGATION IS WAIVED, subject to the terms and conditions of the policy, certain policies may require an endorsement. A statement on this certificate does not confer rights to the certificate holder in lieu of such endorsement(s).

PRODUCER License # 0757776 HUB International Insurance Services (SOW) 2905 Rodeo Park Drive East Building 6, Suite 100 Santa Fe, NM 87505	CONTACT NAME: Michelle Vialpando PHONE (A/C, No, Ext): (505) 992-1873 FAX (A/C, No): (866) 621-0427 E-MAIL ADDRESS: michelle.vialpando@hubinternational.com
	INSURER(S) AFFORDING COVERAGE — NAIC #
	INSURER A : ACUITY, A Mutual Insurance Company — 14184
INSURED Sub Surface Contracting Inc 27A Paseo De River St Santa Fe, NM 87507	INSURER B : Builders Trust of New Mexico INSURER C : INSURER D : INSURER E : INSURER F :

COVERAGES **CERTIFICATE NUMBER:** **REVISION NUMBER:**

THIS IS TO CERTIFY THAT THE POLICIES OF INSURANCE LISTED BELOW HAVE BEEN ISSUED TO THE INSURED NAMED ABOVE FOR THE POLICY PERIOD INDICATED. NOTWITHSTANDING ANY REQUIREMENT, TERM OR CONDITION OF ANY CONTRACT OR OTHER DOCUMENT WITH RESPECT TO WHICH THIS CERTIFICATE MAY BE ISSUED OR MAY PERTAIN, THE INSURANCE AFFORDED BY THE POLICIES DESCRIBED HEREIN IS SUBJECT TO ALL THE TERMS, EXCLUSIONS AND CONDITIONS OF SUCH POLICIES. LIMITS SHOWN MAY HAVE BEEN REDUCED BY PAID CLAIMS.

INSR LTR	TYPE OF INSURANCE	ADDL INSD	SUBR WVD	POLICY NUMBER	POLICY EFF (MM/DD/YYYY)	POLICY EXP (MM/DD/YYYY)	LIMITS	
A	X COMMERCIAL GENERAL LIABILITY CLAIMS-MADE X OCCUR X PD Ded: $500 GEN'L AGGREGATE LIMIT APPLIES PER: POLICY X PRO-JECT LOC OTHER:			Z75944	7/1/2020	7/1/2021	EACH OCCURRENCE DAMAGE TO RENTED PREMISES (Ea occurrence) MED EXP (Any one person) PERSONAL & ADV INJURY GENERAL AGGREGATE PRODUCTS - COMP/OP AGG 	$ 1,000,000 $ 250,000 $ 10,000 $ 1,000,000 $ 3,000,000 $ 3,000,000 $
A	AUTOMOBILE LIABILITY X ANY AUTO OWNED AUTOS ONLY SCHEDULED AUTOS X HIRED AUTOS ONLY X NON-OWNED AUTOS ONLY			Z75944	7/1/2020	7/1/2021	COMBINED SINGLE LIMIT (Ea accident) BODILY INJURY (Per person) BODILY INJURY (Per accident) PROPERTY DAMAGE (Per accident) 	$ 1,000,000 $ $ $ $
A	UMBRELLA LIAB X OCCUR X EXCESS LIAB CLAIMS-MADE DED X RETENTION $ 0			Z75944	7/1/2020	7/1/2021	EACH OCCURRENCE AGGREGATE 	$ 2,000,000 $ 2,000,000 $
B	WORKERS COMPENSATION AND EMPLOYERS' LIABILITY ANY PROPRIETOR/PARTNER/EXECUTIVE OFFICER/MEMBER EXCLUDED? (Mandatory in NH) Y / N: Y If yes, describe under DESCRIPTION OF OPERATIONS below	N / A		0692	1/1/2021	1/1/2022	X PER STATUTE OTH-ER E.L. EACH ACCIDENT E.L. DISEASE - EA EMPLOYEE E.L. DISEASE - POLICY LIMIT	 $ 2,000,000 $ 2,000,000 $ 2,000,000
A	Leased/Rented Eqpt			Z75944	7/1/2020	7/1/2021	Ded: $500 / Limit	200,000

DESCRIPTION OF OPERATIONS / LOCATIONS / VEHICLES (ACORD 101, Additional Remarks Schedule, may be attached if more space is required)

CERTIFICATE HOLDER

City of Santa Fe
Public Utilities Department
801 West San Mateo
Santa Fe, NM 87505

CANCELLATION

SHOULD ANY OF THE ABOVE DESCRIBED POLICIES BE CANCELLED BEFORE THE EXPIRATION DATE THEREOF, NOTICE WILL BE DELIVERED IN ACCORDANCE WITH THE POLICY PROVISIONS.

AUTHORIZED REPRESENTATIVE

© 1988-2015 ACORD CORPORATION. All rights reserved.
The ACORD name and logo are registered marks of ACORD

SUBSURF-01 DONISCHUK

CERTIFICATE OF LIABILITY INSURANCE

DATE (MM/DD/YYYY) 5/20/2021

THIS CERTIFICATE IS ISSUED AS A MATTER OF INFORMATION ONLY AND CONFERS NO RIGHTS UPON THE CERTIFICATE HOLDER. THIS CERTIFICATE DOES NOT AFFIRMATIVELY OR NEGATIVELY AMEND, EXTEND OR ALTER THE COVERAGE AFFORDED BY THE POLICIES BELOW. THIS CERTIFICATE OF INSURANCE DOES NOT CONSTITUTE A CONTRACT BETWEEN THE ISSUING INSURER(S), AUTHORIZED REPRESENTATIVE OR PRODUCER, AND THE CERTIFICATE HOLDER.

IMPORTANT: If the certificate holder is an ADDITIONAL INSURED, the policy(ies) must have ADDITIONAL INSURED provisions or be endorsed. If SUBROGATION IS WAIVED, subject to the terms and conditions of the policy, certain policies may require an endorsement. A statement on this certificate does not confer rights to the certificate holder in lieu of such endorsement(s).

PRODUCER License # 0757776 HUB International Insurance Services (SOW) 2905 Rodeo Park Drive East Building 6, Suite 100 Santa Fe, NM 87505	CONTACT NAME: Michelle Vialpando PHONE (A/C, No, Ext): (505) 992-1873 FAX (A/C, No): (866) 621-0427 E-MAIL ADDRESS: michelle.vialpando@hubinternational.com
INSURED Sub Surface Contracting Inc 27A Paseo De River St Santa Fe, NM 87507	INSURER(S) AFFORDING COVERAGE — NAIC # INSURER A : ACUITY, A Mutual Insurance Company — 14184 INSURER B : Builders Trust of New Mexico INSURER C : INSURER D : INSURER E : INSURER F :

COVERAGES **CERTIFICATE NUMBER:** **REVISION NUMBER:**

THIS IS TO CERTIFY THAT THE POLICIES OF INSURANCE LISTED BELOW HAVE BEEN ISSUED TO THE INSURED NAMED ABOVE FOR THE POLICY PERIOD INDICATED. NOTWITHSTANDING ANY REQUIREMENT, TERM OR CONDITION OF ANY CONTRACT OR OTHER DOCUMENT WITH RESPECT TO WHICH THIS CERTIFICATE MAY BE ISSUED OR MAY PERTAIN, THE INSURANCE AFFORDED BY THE POLICIES DESCRIBED HEREIN IS SUBJECT TO ALL THE TERMS, EXCLUSIONS AND CONDITIONS OF SUCH POLICIES. LIMITS SHOWN MAY HAVE BEEN REDUCED BY PAID CLAIMS.

INSR LTR	TYPE OF INSURANCE	ADDL INSD	SUBR WVD	POLICY NUMBER	POLICY EFF (MM/DD/YYYY)	POLICY EXP (MM/DD/YYYY)	LIMITS	
A	X COMMERCIAL GENERAL LIABILITY CLAIMS-MADE X OCCUR X PD Ded: $500 GEN'L AGGREGATE LIMIT APPLIES PER: POLICY X PRO-JECT LOC OTHER:			Z75944	7/1/2021	7/1/2022	EACH OCCURRENCE DAMAGE TO RENTED PREMISES (Ea occurrence) MED EXP (Any one person) PERSONAL & ADV INJURY GENERAL AGGREGATE PRODUCTS - COMP/OP AGG 	$ 1,000,000 $ 250,000 $ 10,000 $ 1,000,000 $ 3,000,000 $ 3,000,000 $
A	AUTOMOBILE LIABILITY X ANY AUTO OWNED AUTOS ONLY SCHEDULED AUTOS X HIRED AUTOS ONLY X NON-OWNED AUTOS ONLY			Z75944	7/1/2021	7/1/2022	COMBINED SINGLE LIMIT (Ea accident) BODILY INJURY (Per person) BODILY INJURY (Per accident) PROPERTY DAMAGE (Per accident) 	$ 1,000,000 $ $ $ $
A	UMBRELLA LIAB X OCCUR X EXCESS LIAB CLAIMS-MADE DED X RETENTION $ 0			Z75944	7/1/2021	7/1/2022	EACH OCCURRENCE AGGREGATE 	$ 2,000,000 $ 2,000,000 $
B	WORKERS COMPENSATION AND EMPLOYERS' LIABILITY ANY PROPRIETOR/PARTNER/EXECUTIVE OFFICER/MEMBER EXCLUDED? (Mandatory in NH) Y / N: Y If yes, describe under DESCRIPTION OF OPERATIONS below	N / A		0692	1/1/2021	1/1/2022	X PER STATUTE OTH-ER E.L. EACH ACCIDENT E.L. DISEASE - EA EMPLOYEE E.L. DISEASE - POLICY LIMIT	 $ 2,000,000 $ 2,000,000 $ 2,000,000
A	Leased/Rented Eqpt			Z75944	7/1/2021	7/1/2022	Ded: $500 / Limit	200,000

DESCRIPTION OF OPERATIONS / LOCATIONS / VEHICLES (ACORD 101, Additional Remarks Schedule, may be attached if more space is required)

CERTIFICATE HOLDER

City of Santa Fe
Public Utilities Department
801 West San Mateo
Santa Fe, NM 87505

CANCELLATION

SHOULD ANY OF THE ABOVE DESCRIBED POLICIES BE CANCELLED BEFORE THE EXPIRATION DATE THEREOF, NOTICE WILL BE DELIVERED IN ACCORDANCE WITH THE POLICY PROVISIONS.

AUTHORIZED REPRESENTATIVE

© 1988-2015 ACORD CORPORATION. All rights reserved.
The ACORD name and logo are registered marks of ACORD

City of Santa Fe

Treasury Department
200 Lincoln Ave.
Santa Fe, New Mexico 87504-0909
505-955-6551

BUSINESS REGISTRATION

Business Name: SUB SURFACE CONTRACTING INC.
DBA: SUB SURFACE CONTRACTING INC.

Business Location: 27 PASEO DE RIVER A
SANTA FE , NM 87507

Owner: SUB SURFACE CONTRACTING INC.

License Number: 46991

Issued Date: April 01, 2021

Expiration Date: April 01, 2022

CRS Number: 02104256000

License Type: Business License - Renewable

Classification: Contractor - Specialty

Fees Paid: $35.00

SUB SURFACE CONTRACTING INC.
27 A PASEO DE RIVER
SANTA FE, NM 87507

THIS IS NOT A CONSTRUCTION PERMIT OR SIGN PERMIT. APPROPRIATE PERMITS MUST BE OBTAINED FROM THE CITY OF SANTA FE BUILDING PERMIT DIVISION PRIOR TO COMMENCEMENT OF ANY CONSTRUCTION OR THE INSTALLATION OF ANY EXTERIOR SIGN.

THIS REGISTRATION/LICENSE IS NOT TRANSFERRABLE TO OTHER BUSINESSES OR PREMISES.

TO BE POSTED IN A CONSPICUOUS PLACE

CITY OF SANTA FE PROCUREMENT CHECKLIST

Contractor Name: Sub Surface Contracting, Inc.

Procurement Title: 21/43/B Priority Line Replacement Price Agreement, CIP # 3058

Procurement Method: State Price Agreement ☐ *Cooperative* ☐ *Sole Source* ☐ *Other* ☐ _____

Exempt ☐ *Request For Proposal (*RFP) ☒ *Invitation To Bid (ITB)* ☐ *Contract under 60K* ☐ *Contract over 60K* ☐

Department Requesting Bill Huey Water Division, PUD

Procurement Requirements:
A procurement file shall be maintained for all contracts, regardless of the method of procurement. The procurement file shall contain the basis on which the award is made, all submitted bids, all evaluation materials, score sheets, quotations and all other documentation related to or prepared in conjunction with evaluation, negotiation, and the award process. The procurement shall contain a written determination from the Requesting Department, signed by the purchasing officer, setting forth the reasoning for the contract award decision before submitting to the Committees. .

REQUIRED DOCUMENTS FOR APPROVAL BY PURCHASING*

YES	N/A	
☒	☐	Approved Procurement Checklist (by Purchasing)
☒	☐	Memo addressed to City Manager (under 60K) Committees/City Council (over 60K)
☐	☒	State Price Agreement
☐	☒	RFP
☐	☒	Evaluation Committee Report
☒	☐	ITB
☒	☐	Bib Tab
☐	☒	Quotes (3 valid current quotes)
☐	☒	Cooperative Agreement
☐	☒	Sole Source Request and Determination Form
☐	☒	Contractors Exempt Letter
☒	☐	Purchasing Officers approval for exempt procurement
☐	☒	BAR
☐	☒	FIR
☒	☐	Executed Contract, Agreement or Amendment
☒	☐	Current Business Registration and CRS numbers on contract or agreement
☒	☐	Summary of Contracts and Agreements form
☐	☒	Certificate of Insurance
☐	☐	All documentation presented to Committees
☐	☐	Other: _____

Public Utilities Dept / Water Division/Bill Huey (Bill Huey)	Engineer	8/17/21
Department Rep Printed Name (attesting that all information included)	Title	Date
Fran Dunaway (Fran Dunaway, Aug 23, 2021 12:29 MDT)	Chief Procurement Officer	Aug 23, 2021
Purchasing Officer (attesting that all information is reviewed)	Title	Date

Include all other substantive documents and records of communication that pertain to the procurement and any resulting contract.

*

Item # 23-0182
Munis# 3202929

CITY OF SANTA FE
AMENDMENT No. 1 TO
THE PRIORITY LINE REPLACEMENT
PRICE AGREEMENT
ITEM# 21-0484

This AMENDMENT No. 1 (the "Amendment") to the CITY OF SANTA FE AGREEMENT dated September 8, 2021 (the "Agreement"), between the City of Santa Fe (the "City") and Sub Surface Contracting Inc. (the "Contractor"). The date of this Amendment shall be the date when it is executed by the City.

RECITALS

A. Under the terms of the Agreement, Contractor has agreed to provide services for the Priority Line Replacement for the City of Santa Fe.

B. Pursuant to Article 14 of the Agreement, and for good and valuable consideration, the receipt and sufficiency of which are acknowledged by the parties, the City and the Contractor agree as follows:

1. COMPENSATION.

Article 2, paragraph A of the Agreement is amended to increase the "up to" amount by two million seven hundred and ninety thousand dollars ($2,790,000), so that Article 2, paragraph A reads in its entirety as follows:

A. The City shall pay to the Contractor in full payment for services satisfactorily performed at total amount up to four million six hundred forty nine thousand nine hundred and twenty seven dollars and ninety five cents ($4,649,927.95). The New Mexico gross receipts tax levied on the amounts payable under this Agreement totaling one hundred eighty nine thousand eight hundred forty three dollars and seventy five cents ($390,072.05) shall be paid by the City to the Contractor as described in Exhibit A attached hereto. **The total amount payable to the Contractor under this Agreement, including gross receipts tax and expenses, shall not five million forty thousand dollars ($5,040,000.). This amount is a maximum and not a guarantee that the work assigned to be performed by Contractor under this Agreement shall equal the amount stated herein. The parties do not intend for**

the Contractor to continue to provide services without compensation when the total compensation amount is reached. Contractor is responsible for notifying the City when the services provided under this Agreement reach the total compensation amount. In no event will the Contractor be paid for services provided in excess of the total compensation amount without this Agreement being amended in writing prior to those services in excess of the total compensation amount being provided.

2. AGREEMENT IN FULL FORCE.

Except as specifically provided in this Amendment, the Agreement remains and shall remain in full force and effect, in accordance with its terms.

IN WITNESS WHEREOF, the parties have executed this Amendment No.1 to the City of Santa Fe Price Agreement as of the dates set forth below.

CITY OF SANTA FE:

ALAN WEBBER, MAYOR

Date: May 1, 2023

CONTRACTOR:
SUB SURFACE CONTRACTING.

NAME & TITLE

Date: 3-28-2023
CRS# 02104256000
Registration #46991

ATTEST:

KRISTINE BUSTOS MIHELCIC ,CITY CLERK XIV
GB MTG 04/26/23

APPROVED AS TO FORM:

Patricia Feghali
Patricia Feghali (Mar 24, 2023 10:06 MDT)

PATRICIA FEGHALI, ASSISTANT CITY ATTORNEY

APPROVED FOR FINANCES:

Emily K. Oster
Emily K. Oster (Apr 30, 2023 22:28 MDT)

EMILY OSTER, FINANCE DIRECTOR

5050395.572970 WTR1950536
Org/Obj

City of Santa Fe, New Mexico

memo

Date: March 28, 2023

To: Finance Committee / Public Works-Public Utilities Committee

Via: Emily Oster, Finance Director EKO
Travis Dutton-Leyda, Chief Procurement Officer TDL
John Dupuis, Public Utilities Department Director JD
Jesse D. Roach, Water Division Director

From: Michael R. Moya, T&D Section Manager
Bill Huey, Water Division Engineer Associate BH

RE: Request approval of Amendment #1 to add funds to the Priority Line Replacement Price Agreement, CIP # 3058 Sub Surface Constructionin the amount of $2,790,000 including NMGRT for the remainder of the contract term (FY2024-25).

ITEM AND ISSUE:

The Water Division requests increasing the amount of award for bid number '21/43/B for the FY 22/23 Priority Line Replacement Price Agreement, CIP # 3058 to Sub Surface Construction by $2,790,000.00 inclusive of NMGRT for the remaining three (3) Fiscal Years, FY 2022-23 until FY2024-25.

Approval of the BAR – Budget Increase in the amount of $5,000,000 from the Water Enterprise Fund cash balance into the Water CIP fund for FY 2023, of which $2,790,000 is for this amendment.

BACKGROUND AND SUMMARY:

City Council has awarded bid number '21/43/B for the Priority Line Replacement Price Agreement, CIP # 3058 to Sub Surface Contracting, Inc. (Sub Surface) and A.A.C. Construction, LLC (AAC) for four (4) Fiscal Years, FY 2021-22 until FY2024-25 in the amount of $3,500,000 inclusive of NMGRT. Future funding was dependent upon the availability of CIP funds.

The Priority Line Replacement Price Agreement is an on-call requirements contract, with the Water Division issuing work orders as needed for work such as water line replacements. The contract is funded from CIP for Transmission and Distribution to work on their infrastructure.

Current expenditures on this contract are still at or below the initial contract amount. Current work on the contract will need additional funds. The contract funding needed for the completion of the contract term for Sub Surface is $2,790,000 inclusive of NMGRT. Total funding for the entire contract with AAC will be $5,040,000 inclusive of NMGRT. Funding for this amendment #1 will be available upon approval of the BAR/ Increase attached to Item D, AAC PLR Amendment #1 on this agenda. The BAR is in the amount of $5,000,000 including $2,790,000 for Sub Surface PLR #1 and $2,210,000 for AAC PLR #1 for a combined amount of $2,790,000 for a combined amount of $5,000,000.

PROCUREMENT:
21/43/B for the FY 2022 Priority Line Replacement

CONTRACT NUMBER:

A.A.C Construction # 3202778.

FUNDING SOURCE:
The funding source is:
Water Enterprise Fund/ CIP
FY 2023
Fund Name/Number: Water Enterprise Fund/ 500
Munis Org Name/Number: Water CIP / 5050395
Munis Object Name/Number: WIP Construction / 572970

RECOMMENDATION:

The Water Division recommends:

- Review and approval of increase of contract amount to Sub Surface Construction for the Priority Line Replacement Price Agreement, CIP # 3058 under ITB No. '21/43/B of $2,790,000 for a total amount of $5,040,000 inclusive of NMGRT through FY2024-25.

Log # *{Finance use only}*:	
Batch # *{Finance use only}*:	

City of Santa Fe, New Mexico
BUDGET AMENDMENT RESOLUTION (BAR)

DEPARTMENT / DIVISION NAME	DATE
PUD/Water/CIP	3/17/2023

ITEM DESCRIPTION	ORG	OBJECT	PROJECT	INCREASE	DECREASE
EXPENDITURES				*{enter as positive #}*	*{enter as negative #}*
Water CIP WIP Construction	5050395	572970	WTR1950535	5,000,000	
REVENUES				*{enter as negative #}*	*{enter as positive #}*
				$ 5,000,000	$ -

JUSTIFICATION: *(use additional page if needed)*
--Attach supporting documentation/memo

Budget Increase from Cash Balance in Water Enterprise Fund for Priority Line Replacement

Price Agreements Amendments #1 to A.A.C Construction and Sub Surface for

FY 23 CIP3058

{Complete section below if BAR results in a net change to ANY Fund}

Fund(s) Affected	Fund Balance Increase/(Decrease)
505	(5,000,000)
TOTAL:	**(5,000,000)**

Maya Martinez — 3/17/2023
Prepared By *{print name}* — Date

Division Director Signature *{optional}* — Date

John Dupuis (Apr 4, 2023 17:41 MDT)
Department Director Signature — Date

{Use this form for Finance Committee/ City Council agenda items ONLY}

CITY COUNCIL APPROVAL

City Council Approval Date

Agenda Item #:

Andy Hopkins — 4/5/23
Budget Officer — Date

Finance Director *{≤ $5,000}* — Date

City Manager *{≤ $60,000}* — Date

City of Santa Fe

Real Estate Summary of Contracts, Agreements, Amendments & Leases

Section to be completed by department

1. Munis Contract # **3202929**

Contractor: **Sub Surface Contracting**

Description: **CIP# 3058 Priority Line Replacement**

Contract ☐ Agreement ☉ Lease / Rent ☐ Amendment ☐

Term Start Date: **as approved** Term End Date: **6/30/25**

☑ Approved by Council Date: **Pending**

Contract / Lease: Contract $2,250,000

Amendment # 1 to the Original Contract / Lease # 21-0484

Increase/(Decrease) Amount $ 2,790,000

Extend Termination Date to: N/A

☉ Approved by Council Date: Pending

Amendment is for:

2. **HISTORY of Contract, Amendments & Lease / Rent - Please Elaborate** (option: attach spreadsheet if multiple amendments)

Original Contract # 21-0484 $2,250,000 approved 9/8/21

3. **Procurement History: 21/43/B**

Purchasing Officer Review: Apr 5, 2023 Date:

Comment & Exceptions: Amending compensation

4. **Funding Source: Water Enterprise Fund CIP** **Org / Object: 5050395.572970**

Andy Hopkins
Andy Hopkins (Apr 5, 2023 17:18 MDT)

Budget Officer Approval: Apr 5, 2023 Date:

Comment & Exceptions:

Staff Contact who completed this form: Maya Martinez Phone # **4271**

Email: **mfmartinez@santafenm.gov**

To be recorded by City Clerk:

Clerk #

Date of Execution:

City of Santa Fe

Treasury Department
200 Lincoln Ave.
Santa Fe, New Mexico 87504-0909
505-955-6551

BUSINESS REGISTRATION

Business Name: SUB SURFACE CONTRACTING INC.
DBA: SUB SURFACE CONTRACTING INC.

Business Location: 27 PASEO DE RIVER A
SANTA FE , NM 87507

CRS Number: 02104256000

Owner: SUB SURFACE CONTRACTING INC.

License Number: 46991

License Type: Business License - Renewable

Issued Date: March 28, 2022

Classification: Contractor - Specialty

Expiration Date: March 28, 2023

Fees Paid: $35.00

SUB SURFACE CONTRACTING INC.
27 A PASEO DE RIVER
SANTA FE, NM 87507

THIS IS NOT A CONSTRUCTION PERMIT OR SIGN PERMIT. APPROPRIATE PERMITS MUST BE OBTAINED FROM THE CITY OF SANTA FE BUILDING PERMIT DIVISION PRIOR TO COMMENCEMENT OF ANY CONSTRUCTION OR THE INSTALLATION OF ANY EXTERIOR SIGN.

THIS REGISTRATION/LICENSE IS NOT TRANSFERRABLE TO OTHER BUSINESSES OR PREMISES.

TO BE POSTED IN A CONSPICUOUS PLACE

Ver 1.6 2.7.2020

SUBSURF-01 DROMERO

CERTIFICATE OF LIABILITY INSURANCE

DATE (MM/DD/YYYY) 12/26/2022

THIS CERTIFICATE IS ISSUED AS A MATTER OF INFORMATION ONLY AND CONFERS NO RIGHTS UPON THE CERTIFICATE HOLDER. THIS CERTIFICATE DOES NOT AFFIRMATIVELY OR NEGATIVELY AMEND, EXTEND OR ALTER THE COVERAGE AFFORDED BY THE POLICIES BELOW. THIS CERTIFICATE OF INSURANCE DOES NOT CONSTITUTE A CONTRACT BETWEEN THE ISSUING INSURER(S), AUTHORIZED REPRESENTATIVE OR PRODUCER, AND THE CERTIFICATE HOLDER.

IMPORTANT: If the certificate holder is an ADDITIONAL INSURED, the policy(ies) must have ADDITIONAL INSURED provisions or be endorsed. If SUBROGATION IS WAIVED, subject to the terms and conditions of the policy, certain policies may require an endorsement. A statement on this certificate does not confer rights to the certificate holder in lieu of such endorsement(s).

PRODUCER License # 0757776 HUB International Insurance Services (SOW) 2905 Rodeo Park Drive East Building 6, Suite 100 Santa Fe, NM 87505	CONTACT NAME: PHONE (A/C, No, Ext): (505) 982-4296 FAX (A/C, No): (866) 621-0427 E-MAIL ADDRESS:
	INSURER(S) AFFORDING COVERAGE — NAIC #
	INSURER A : ACUITY, A Mutual Insurance Company — 14184
INSURED Sub Surface Contracting Inc 27A Paseo De River St Santa Fe, NM 87507	INSURER B : Builders Trust of New Mexico
	INSURER C :
	INSURER D :
	INSURER E :
	INSURER F :

COVERAGES **CERTIFICATE NUMBER:** **REVISION NUMBER:**

THIS IS TO CERTIFY THAT THE POLICIES OF INSURANCE LISTED BELOW HAVE BEEN ISSUED TO THE INSURED NAMED ABOVE FOR THE POLICY PERIOD INDICATED. NOTWITHSTANDING ANY REQUIREMENT, TERM OR CONDITION OF ANY CONTRACT OR OTHER DOCUMENT WITH RESPECT TO WHICH THIS CERTIFICATE MAY BE ISSUED OR MAY PERTAIN, THE INSURANCE AFFORDED BY THE POLICIES DESCRIBED HEREIN IS SUBJECT TO ALL THE TERMS, EXCLUSIONS AND CONDITIONS OF SUCH POLICIES. LIMITS SHOWN MAY HAVE BEEN REDUCED BY PAID CLAIMS.

INSR LTR	TYPE OF INSURANCE	ADDL INSD	SUBR WVD	POLICY NUMBER	POLICY EFF (MM/DD/YYYY)	POLICY EXP (MM/DD/YYYY)	LIMITS	
A	X COMMERCIAL GENERAL LIABILITY			Z75944	7/1/2022	7/1/2023	EACH OCCURRENCE	$ 1,000,000
	CLAIMS-MADE X OCCUR						DAMAGE TO RENTED PREMISES (Ea occurrence)	$ 250,000
	X PD Ded: $500						MED EXP (Any one person)	$ 10,000
	GEN'L AGGREGATE LIMIT APPLIES PER:						PERSONAL & ADV INJURY	$ 1,000,000
	POLICY X PRO-JECT LOC						GENERAL AGGREGATE	$ 3,000,000
	OTHER:						PRODUCTS - COMP/OP AGG	$ 3,000,000
								$
A	AUTOMOBILE LIABILITY			Z75944	7/1/2022	7/1/2023	COMBINED SINGLE LIMIT (Ea accident)	$ 1,000,000
	X ANY AUTO						BODILY INJURY (Per person)	$
	OWNED AUTOS ONLY / SCHEDULED AUTOS						BODILY INJURY (Per accident)	$
	X HIRED AUTOS ONLY / X NON-OWNED AUTOS ONLY						PROPERTY DAMAGE (Per accident)	$
								$
A	UMBRELLA LIAB X OCCUR			Z75944	7/1/2022	7/1/2023	EACH OCCURRENCE	$ 2,000,000
	X EXCESS LIAB CLAIMS-MADE						AGGREGATE	$ 2,000,000
	DED X RETENTION $ 0							$
B	WORKERS COMPENSATION AND EMPLOYERS' LIABILITY Y / N	N / A		0692	1/1/2023	1/1/2024	PER STATUTE / OTH-ER	
	ANY PROPRIETOR/PARTNER/EXECUTIVE OFFICER/MEMBER EXCLUDED? Y (Mandatory in NH)						E.L. EACH ACCIDENT	$ 2,000,000
	If yes, describe under DESCRIPTION OF OPERATIONS below						E.L. DISEASE - EA EMPLOYEE	$ 2,000,000
							E.L. DISEASE - POLICY LIMIT	$ 2,000,000
A	Leased/Rented Eqpt			Z75944	7/1/2022	7/1/2023	Ded: $500/Limit:	200,000

DESCRIPTION OF OPERATIONS / LOCATIONS / VEHICLES (ACORD 101, Additional Remarks Schedule, may be attached if more space is required)

CERTIFICATE HOLDER

City of Santa Fe
Public Utilities Department
801 West San Mateo
Santa Fe, NM 87505

CANCELLATION

SHOULD ANY OF THE ABOVE DESCRIBED POLICIES BE CANCELLED BEFORE THE EXPIRATION DATE THEREOF, NOTICE WILL BE DELIVERED IN ACCORDANCE WITH THE POLICY PROVISIONS.

AUTHORIZED REPRESENTATIVE

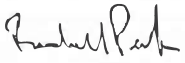

© 1988-2015 ACORD CORPORATION. All rights reserved.
The ACORD name and logo are registered marks of ACORD

CITY OF SANTA FE PROCUREMENT CHECKLIST

Contractor Name: Sub Surface Contracting, Inc.

Procurement Title: 21/43/B Priority Line Replacement Price Agreement, CIP # 3058

Procurement Method: State Price Agreement ☐ *Cooperative* ☐ *Sole Source* ☐ *Other* ☐ _____

Exempt ☐ *Request For Proposal* (RFP) ☒ *Invitation To Bid (ITB)* ☐ *Contract under 60K* ☐ *Contract over 60K* ☐

Department Requesting Bill Huey Water Division, PUD

Procurement Requirements:
A procurement file shall be maintained for all contracts, regardless of the method of procurement. The procurement file shall contain the basis on which the award is made, all submitted bids, all evaluation materials, score sheets, quotations and all other documentation related to or prepared in conjunction with evaluation, negotiation, and the award process. The procurement shall contain a written determination from the Requesting Department, signed by the purchasing officer, setting forth the reasoning for the contract award decision before submitting to the Committees. .

REQUIRED DOCUMENTS FOR APPROVAL BY PURCHASING*

YES	N/A	
☒	☐	Approved Procurement Checklist (by Purchasing)
☒	☐	Memo addressed to City Manager (under 60K) Committees/City Council (over 60K)
☐	☒	State Price Agreement
☐	☒	RFP
☐	☒	Evaluation Committee Report
☒	☐	ITB
☒	☐	Bib Tab
☐	☒	Quotes (3 valid current quotes)
☐	☒	Cooperative Agreement
☐	☒	Sole Source Request and Determination Form
☐	☒	Contractors Exempt Letter
☒	☐	Purchasing Officers approval for exempt procurement
☐	☒	BAR
☐	☒	FIR
☒	☐	Executed Contract, Agreement or Amendment
☒	☐	Current Business Registration and CRS numbers on contract or agreement
☒	☐	Summary of Contracts and Agreements form
☐	☒	Certificate of Insurance
☐	☐	All documentation presented to Committees
☐	☐	Other: _____

Public Utilities Dept / Water Division/Bill Huey (Bill Huey)	Engineer	
Department Rep Printed Name (attesting that all information included)	Title	Date
	Contracts Supervisor	Apr 5, 2023
Purchasing Officer (attesting that all information is reviewed)	Title	Date

Include all other substantive documents and records of communication that pertain to the procurement and any resulting contract.

*

City of Santa Fe, New Mexico

memo

Date: August 9, 2021

To: Public Works-Public Utilities Committee / Finance Committee

From: Michael R. Moya, T&D Section Manager MM
Bill Huey, Water Division Engineer Associate BH

Via: Jesse D. Roach, Water Division Director JR

RE: Request to award bid number '21/43/B for the FY 2022 Priority Line Replacement Price Agreement, CIP # 3058 to Sub Surface Contracting, Inc. and A.A.C. Construction, LLC.; Request approval of a Budget Adjustment Request/Budget increase in the amount of $3,500,000.

ITEM AND ISSUE:

The Water Division requests award of bid number '21/43/B for the FY 21/22 Priority Line Replacement Price Agreement, CIP # 3058 to Sub Surface Contracting, Inc. and A.A.C. Construction, LLC for the remainder of four (4) Fiscal Years, FY 2021-22 until FY2024-25. Initial funding of $3,500,000 inclusive NMGRT is requested for FY2021-22. Funding is broken down for each contractor as follows: $2,250,000.00 inclusive of NMGRT for Sub Surface and $1,250,000.00 inclusive of NMGRT for AAC. .Future funding will depend upon the availability of CIP funds.

BACKGROUND AND SUMMARY:

The Priority Line Replacement Price Agreement is an on-call requirements contract, with the Water Division issuing work orders as needed for work such as water line replacements. The contract is funded from CIP for Transmission and Distribution to work on their infrastructure. The initial Contract amount is limited to $3,500,000.00 inclusive of New Mexico Gross Receipt Tax (NMGRT).

This is was multi-contractor award ITB to set the applicable Bid Items for future work. The ITB was only used to select the winning Contractors. Future work will be assigned under fully signed Work Orders for planned work on will be followed with a signed Work Order for Emergency repair. The exact type of work required will be used to select from the applicable Bid Items. Not every Bit Item is anticipated to be used.

The initial contract period is Fiscal Years 2021-2025. The bids for this project were opened on June 17, 2021 and were subsequently evaluated for completeness and accuracy. The low bid in the amount of $892,448.25 plus NMGRT was submitted by Sub Surface Contracting, Inc. A second acceptable bid of $933,364.22 was submitted by A.A.C. Construction, LLC. The Water Division is planning on replacing pipe on multiple streets in the Apache, San Ildefonso, San Felipe, MaClovia, Isabel and Rosina neighborhood, as well as Bishops Lodge between Artist and Murales Roads, Lorenzo Road, Malaga

Lane, Pino Road, San Isabel Street, Sosaya Street, Camino Santander and Camino Santiago/Camino Matias.

A summary of the bids is provided below:

Bidders	Total Bid without NMGRT	Bid Including Veterans preference without NMGRT
Sub Surface Contracting, Inc.	$892,448.25	$821,052.39
A.A.C. Construction, LLC	$933,364.22	
TLC Plumbing & Utility	$1,158,308.40	
Blueline Construction, Inc.	$1,476,101.57	
Allied 360 Construction, LLC	$2,364,321.74	

CONTRACT NUMBER:
The FY22 Munis contract number:
Sub Surface Contracting # 3202929
A.A.C Construction # 3202927

FUNDING SOURCE:
The funding source is:
Water Enterprise Fund/ CIP
FY 2022
Fund Name/Number: Water Enterprise Fund/ 500
Munis Org Name/Number: Water CIP / 5050395
Munis Object Name/Number: WIP Construction / 572970

Funds for this work will be available in Business Unit, Line Item 5050395.572970 in the amount of $1,600,000.00 plus NMGRT upon approval of the BAR Budget Increase.

RECOMMENDATION:

The Water Division recommends:

- Review and approval of award of contracts to Sub Surface Contracting, Inc. and A.A.C Construction, LLC for the FY 21/22 Priority Line Replacement Price Agreement, CIP # 3058 under ITB No. '21/43/B for a total amount of $3,500,000.00 inclusive of NMGRT for FY2021-22.

- Approval of the BAR – Budget Increase in the amount of $3,500,000 from the Water Enterprise Fund cash balance into the Water CIP fund for FY 2022.

- Forwarding and recommendation of approval of award and contract to the Finance Committee for their consideration and approval to the Governing Body for their final consideration and approval.

SUBSURF-01 DONISCHUK

CERTIFICATE OF LIABILITY INSURANCE

DATE (MM/DD/YYYY) 5/20/2021

THIS CERTIFICATE IS ISSUED AS A MATTER OF INFORMATION ONLY AND CONFERS NO RIGHTS UPON THE CERTIFICATE HOLDER. THIS CERTIFICATE DOES NOT AFFIRMATIVELY OR NEGATIVELY AMEND, EXTEND OR ALTER THE COVERAGE AFFORDED BY THE POLICIES BELOW. THIS CERTIFICATE OF INSURANCE DOES NOT CONSTITUTE A CONTRACT BETWEEN THE ISSUING INSURER(S), AUTHORIZED REPRESENTATIVE OR PRODUCER, AND THE CERTIFICATE HOLDER.

IMPORTANT: If the certificate holder is an ADDITIONAL INSURED, the policy(ies) must have ADDITIONAL INSURED provisions or be endorsed. If SUBROGATION IS WAIVED, subject to the terms and conditions of the policy, certain policies may require an endorsement. A statement on this certificate does not confer rights to the certificate holder in lieu of such endorsement(s).

PRODUCER License # 0757776 HUB International Insurance Services (SOW) 2905 Rodeo Park Drive East Building 6, Suite 100 Santa Fe, NM 87505	CONTACT NAME: Michelle Vialpando PHONE (A/C, No, Ext): (505) 992-1873 FAX (A/C, No): (866) 621-0427 E-MAIL ADDRESS: michelle.vialpando@hubinternational.com
	INSURER(S) AFFORDING COVERAGE — NAIC #
	INSURER A : ACUITY, A Mutual Insurance Company — 14184
INSURED Sub Surface Contracting Inc 27A Paseo De River St Santa Fe, NM 87507	INSURER B : Builders Trust of New Mexico
	INSURER C :
	INSURER D :
	INSURER E :
	INSURER F :

COVERAGES **CERTIFICATE NUMBER:** **REVISION NUMBER:**

THIS IS TO CERTIFY THAT THE POLICIES OF INSURANCE LISTED BELOW HAVE BEEN ISSUED TO THE INSURED NAMED ABOVE FOR THE POLICY PERIOD INDICATED. NOTWITHSTANDING ANY REQUIREMENT, TERM OR CONDITION OF ANY CONTRACT OR OTHER DOCUMENT WITH RESPECT TO WHICH THIS CERTIFICATE MAY BE ISSUED OR MAY PERTAIN, THE INSURANCE AFFORDED BY THE POLICIES DESCRIBED HEREIN IS SUBJECT TO ALL THE TERMS, EXCLUSIONS AND CONDITIONS OF SUCH POLICIES. LIMITS SHOWN MAY HAVE BEEN REDUCED BY PAID CLAIMS.

INSR LTR	TYPE OF INSURANCE	ADDL INSD	SUBR WVD	POLICY NUMBER	POLICY EFF (MM/DD/YYYY)	POLICY EXP (MM/DD/YYYY)	LIMITS	
A	X COMMERCIAL GENERAL LIABILITY CLAIMS-MADE X OCCUR X PD Ded: $500 GEN'L AGGREGATE LIMIT APPLIES PER: POLICY X PRO-JECT LOC OTHER:			Z75944	7/1/2020	7/1/2021	EACH OCCURRENCE DAMAGE TO RENTED PREMISES (Ea occurrence) MED EXP (Any one person) PERSONAL & ADV INJURY GENERAL AGGREGATE PRODUCTS - COMP/OP AGG	$ 1,000,000 $ 250,000 $ 10,000 $ 1,000,000 $ 3,000,000 $ 3,000,000
A	AUTOMOBILE LIABILITY X ANY AUTO OWNED AUTOS ONLY SCHEDULED AUTOS X HIRED AUTOS ONLY X NON-OWNED AUTOS ONLY			Z75944	7/1/2020	7/1/2021	COMBINED SINGLE LIMIT (Ea accident) BODILY INJURY (Per person) BODILY INJURY (Per accident) PROPERTY DAMAGE (Per accident)	$ 1,000,000 $ $ $
A	UMBRELLA LIAB X OCCUR X EXCESS LIAB CLAIMS-MADE DED X RETENTION $ 0			Z75944	7/1/2020	7/1/2021	EACH OCCURRENCE AGGREGATE	$ 2,000,000 $ 2,000,000
B	WORKERS COMPENSATION AND EMPLOYERS' LIABILITY ANY PROPRIETOR/PARTNER/EXECUTIVE OFFICER/MEMBER EXCLUDED? (Mandatory in NH) Y/N: Y If yes, describe under DESCRIPTION OF OPERATIONS below	N/A		0692	1/1/2021	1/1/2022	X PER STATUTE OTH-ER E.L. EACH ACCIDENT E.L. DISEASE - EA EMPLOYEE E.L. DISEASE - POLICY LIMIT	$ 2,000,000 $ 2,000,000 $ 2,000,000
A	Leased/Rented Eqpt			Z75944	7/1/2020	7/1/2021	Ded: $500 / Limit	200,000

DESCRIPTION OF OPERATIONS / LOCATIONS / VEHICLES (ACORD 101, Additional Remarks Schedule, may be attached if more space is required)

CERTIFICATE HOLDER

City of Santa Fe
Public Utilities Department
801 West San Mateo
Santa Fe, NM 87505

CANCELLATION

SHOULD ANY OF THE ABOVE DESCRIBED POLICIES BE CANCELLED BEFORE THE EXPIRATION DATE THEREOF, NOTICE WILL BE DELIVERED IN ACCORDANCE WITH THE POLICY PROVISIONS.

AUTHORIZED REPRESENTATIVE

© 1988-2015 ACORD CORPORATION. All rights reserved.
The ACORD name and logo are registered marks of ACORD

SUBSURF-01 DONISCHUK

CERTIFICATE OF LIABILITY INSURANCE

DATE (MM/DD/YYYY) 5/20/2021

THIS CERTIFICATE IS ISSUED AS A MATTER OF INFORMATION ONLY AND CONFERS NO RIGHTS UPON THE CERTIFICATE HOLDER. THIS CERTIFICATE DOES NOT AFFIRMATIVELY OR NEGATIVELY AMEND, EXTEND OR ALTER THE COVERAGE AFFORDED BY THE POLICIES BELOW. THIS CERTIFICATE OF INSURANCE DOES NOT CONSTITUTE A CONTRACT BETWEEN THE ISSUING INSURER(S), AUTHORIZED REPRESENTATIVE OR PRODUCER, AND THE CERTIFICATE HOLDER.

IMPORTANT: If the certificate holder is an ADDITIONAL INSURED, the policy(ies) must have ADDITIONAL INSURED provisions or be endorsed. If SUBROGATION IS WAIVED, subject to the terms and conditions of the policy, certain policies may require an endorsement. A statement on this certificate does not confer rights to the certificate holder in lieu of such endorsement(s).

PRODUCER License # 0757776 HUB International Insurance Services (SOW) 2905 Rodeo Park Drive East Building 6, Suite 100 Santa Fe, NM 87505	CONTACT NAME: Michelle Vialpando PHONE (A/C, No, Ext): (505) 992-1873 FAX (A/C, No): (866) 621-0427 E-MAIL ADDRESS: michelle.vialpando@hubinternational.com
	INSURER(S) AFFORDING COVERAGE — NAIC #
	INSURER A : ACUITY, A Mutual Insurance Company — 14184
INSURED Sub Surface Contracting Inc 27A Paseo De River St Santa Fe, NM 87507	INSURER B : Builders Trust of New Mexico
	INSURER C :
	INSURER D :
	INSURER E :
	INSURER F :

COVERAGES **CERTIFICATE NUMBER:** **REVISION NUMBER:**

THIS IS TO CERTIFY THAT THE POLICIES OF INSURANCE LISTED BELOW HAVE BEEN ISSUED TO THE INSURED NAMED ABOVE FOR THE POLICY PERIOD INDICATED. NOTWITHSTANDING ANY REQUIREMENT, TERM OR CONDITION OF ANY CONTRACT OR OTHER DOCUMENT WITH RESPECT TO WHICH THIS CERTIFICATE MAY BE ISSUED OR MAY PERTAIN, THE INSURANCE AFFORDED BY THE POLICIES DESCRIBED HEREIN IS SUBJECT TO ALL THE TERMS, EXCLUSIONS AND CONDITIONS OF SUCH POLICIES. LIMITS SHOWN MAY HAVE BEEN REDUCED BY PAID CLAIMS.

INSR LTR	TYPE OF INSURANCE	ADDL INSD	SUBR WVD	POLICY NUMBER	POLICY EFF (MM/DD/YYYY)	POLICY EXP (MM/DD/YYYY)	LIMITS	
A	X COMMERCIAL GENERAL LIABILITY CLAIMS-MADE X OCCUR X PD Ded: $500 GEN'L AGGREGATE LIMIT APPLIES PER: POLICY X PRO-JECT LOC OTHER:			Z75944	7/1/2021	7/1/2022	EACH OCCURRENCE DAMAGE TO RENTED PREMISES (Ea occurrence) MED EXP (Any one person) PERSONAL & ADV INJURY GENERAL AGGREGATE PRODUCTS - COMP/OP AGG	$ 1,000,000 $ 250,000 $ 10,000 $ 1,000,000 $ 3,000,000 $ 3,000,000
A	AUTOMOBILE LIABILITY X ANY AUTO OWNED AUTOS ONLY SCHEDULED AUTOS X HIRED AUTOS ONLY X NON-OWNED AUTOS ONLY			Z75944	7/1/2021	7/1/2022	COMBINED SINGLE LIMIT (Ea accident) BODILY INJURY (Per person) BODILY INJURY (Per accident) PROPERTY DAMAGE (Per accident)	$ 1,000,000 $ $ $
A	UMBRELLA LIAB X OCCUR X EXCESS LIAB CLAIMS-MADE DED X RETENTION $ 0			Z75944	7/1/2021	7/1/2022	EACH OCCURRENCE AGGREGATE	$ 2,000,000 $ 2,000,000
B	WORKERS COMPENSATION AND EMPLOYERS' LIABILITY ANY PROPRIETOR/PARTNER/EXECUTIVE OFFICER/MEMBER EXCLUDED? (Mandatory in NH) Y/N: Y If yes, describe under DESCRIPTION OF OPERATIONS below	N/A		0692	1/1/2021	1/1/2022	X PER STATUTE OTH-ER E.L. EACH ACCIDENT E.L. DISEASE - EA EMPLOYEE E.L. DISEASE - POLICY LIMIT	$ 2,000,000 $ 2,000,000 $ 2,000,000
A	Leased/Rented Eqpt			Z75944	7/1/2021	7/1/2022	Ded: $500 / Limit	200,000

DESCRIPTION OF OPERATIONS / LOCATIONS / VEHICLES (ACORD 101, Additional Remarks Schedule, may be attached if more space is required)

CERTIFICATE HOLDER

City of Santa Fe
Public Utilities Department
801 West San Mateo
Santa Fe, NM 87505

CANCELLATION

SHOULD ANY OF THE ABOVE DESCRIBED POLICIES BE CANCELLED BEFORE THE EXPIRATION DATE THEREOF, NOTICE WILL BE DELIVERED IN ACCORDANCE WITH THE POLICY PROVISIONS.

AUTHORIZED REPRESENTATIVE

© 1988-2015 ACORD CORPORATION. All rights reserved.
The ACORD name and logo are registered marks of ACORD

City of Santa Fe

Treasury Department
200 Lincoln Ave.
Santa Fe, New Mexico 87504-0909
505-955-6551

BUSINESS REGISTRATION

Business Name: SUB SURFACE CONTRACTING INC.
DBA: SUB SURFACE CONTRACTING INC.

Business Location: 27 PASEO DE RIVER A
SANTA FE , NM 87507

CRS Number: 02104256000

Owner: SUB SURFACE CONTRACTING INC.

License Number: 46991

License Type: Business License - Renewable

Issued Date: April 01, 2021

Classification: Contractor - Specialty

Expiration Date: April 01, 2022

Fees Paid: $35.00

SUB SURFACE CONTRACTING INC.
27 A PASEO DE RIVER
SANTA FE, NM 87507

THIS IS NOT A CONSTRUCTION PERMIT OR SIGN PERMIT. APPROPRIATE PERMITS MUST BE OBTAINED FROM THE CITY OF SANTA FE BUILDING PERMIT DIVISION PRIOR TO COMMENCEMENT OF ANY CONSTRUCTION OR THE INSTALLATION OF ANY EXTERIOR SIGN.

THIS REGISTRATION/LICENSE IS NOT TRANSFERRABLE TO OTHER BUSINESSES OR PREMISES.

TO BE POSTED IN A CONSPICUOUS PLACE

CITY OF SANTA FE PROCUREMENT CHECKLIST

Contractor Name: Sub Surface Contracting, Inc.

Procurement Title: 21/43/B Priority Line Replacement Price Agreement, CIP # 3058

Procurement Method: State Price Agreement ☐ *Cooperative* ☐ *Sole Source* ☐ *Other* ☐ _____

Exempt ☐ *Request For Proposal* (RFP) ☒ *Invitation To Bid (ITB)* ☐ *Contract under 60K* ☐ *Contract over 60K* ☐

Department Requesting Bill Huey Water Division, PUD

Procurement Requirements:
A procurement file shall be maintained for all contracts, regardless of the method of procurement. The procurement file shall contain the basis on which the award is made, all submitted bids, all evaluation materials, score sheets, quotations and all other documentation related to or prepared in conjunction with evaluation, negotiation, and the award process. The procurement shall contain a written determination from the Requesting Department, signed by the purchasing officer, setting forth the reasoning for the contract award decision before submitting to the Committees. .

REQUIRED DOCUMENTS FOR APPROVAL BY PURCHASING*

YES	N/A	
☒	☐	Approved Procurement Checklist (by Purchasing)
☒	☐	Memo addressed to City Manager (under 60K) Committees/City Council (over 60K)
☐	☒	State Price Agreement
☐	☒	RFP
☐	☒	Evaluation Committee Report
☒	☐	ITB
☒	☐	Bib Tab
☐	☒	Quotes (3 valid current quotes)
☐	☒	Cooperative Agreement
☐	☒	Sole Source Request and Determination Form
☐	☒	Contractors Exempt Letter
☒	☐	Purchasing Officers approval for exempt procurement
☐	☒	BAR
☐	☒	FIR
☒	☐	Executed Contract, Agreement or Amendment
☒	☐	Current Business Registration and CRS numbers on contract or agreement
☒	☐	Summary of Contracts and Agreements form
☐	☒	Certificate of Insurance
☐	☐	All documentation presented to Committees
☐	☐	Other: _____

Public Utilities Dept / Water Division/Bill Huey Bill Huey Engineer 8/17/21
Department Rep Printed Name (attesting that all information included) Title Date

Fran Dunaway (Aug 23, 2021 12:29 MDT) Chief Procurement Officer Aug 23, 2021
Purchasing Officer (attesting that all information is reviewed) Title Date

Include all other substantive documents and records of communication that pertain to the procurement and any resulting contract.

*

City of Santa Fe, New Mexico

memo

Date: August 9, 2021

To: Public Works-Public Utilities Committee / Finance Committee

From: Michael R. Moya, T&D Section Manager MM
Bill Huey, Water Division Engineer Associate BH

Via: Jesse D. Roach, Water Division Director JR

RE: Request to award bid number '21/43/B for the FY 2022 Priority Line Replacement Price Agreement, CIP # 3058 to Sub Surface Contracting, Inc. and A.A.C. Construction, LLC.; Request approval of a Budget Adjustment Request/Budget increase in the amount of $3,500,000.

ITEM AND ISSUE:

The Water Division requests award of bid number '21/43/B for the FY 21/22 Priority Line Replacement Price Agreement, CIP # 3058 to Sub Surface Contracting, Inc. and A.A.C. Construction, LLC for the remainder of four (4) Fiscal Years, FY 2021-22 until FY2024-25. Initial funding of $3,500,000 inclusive NMGRT is requested for FY2021-22. Funding is broken down for each contractor as follows: $2,250,000.00 inclusive of NMGRT for Sub Surface and $1,250,000.00 inclusive of NMGRT for AAC. .Future funding will depend upon the availability of CIP funds.

BACKGROUND AND SUMMARY:

The Priority Line Replacement Price Agreement is an on-call requirements contract, with the Water Division issuing work orders as needed for work such as water line replacements. The contract is funded from CIP for Transmission and Distribution to work on their infrastructure. The initial Contract amount is limited to $3,500,000.00 inclusive of New Mexico Gross Receipt Tax (NMGRT).

This is was multi-contractor award ITB to set the applicable Bid Items for future work. The ITB was only used to select the winning Contractors. Future work will be assigned under fully signed Work Orders for planned work on will be followed with a signed Work Order for Emergency repair. The exact type of work required will be used to select from the applicable Bid Items. Not every Bit Item is anticipated to be used.

The initial contract period is Fiscal Years 2021-2025. The bids for this project were opened on June 17, 2021 and were subsequently evaluated for completeness and accuracy. The low bid in the amount of $892,448.25 plus NMGRT was submitted by Sub Surface Contracting, Inc. A second acceptable bid of $933,364.22 was submitted by A.A.C. Construction, LLC. The Water Division is planning on replacing pipe on multiple streets in the Apache, San Ildefonso, San Felipe, MaClovia, Isabel and Rosina neighborhood, as well as Bishops Lodge between Artist and Murales Roads, Lorenzo Road, Malaga

Lane, Pino Road, San Isabel Street, Sosaya Street, Camino Santander and Camino Santiago/Camino Matias.

A summary of the bids is provided below:

Bidders	Total Bid without NMGRT	Bid Including Veterans preference without NMGRT
Sub Surface Contracting, Inc.	$892,448.25	$821,052.39
A.A.C. Construction, LLC	$933,364.22	
TLC Plumbing & Utility	$1,158,308.40	
Blueline Construction, Inc.	$1,476,101.57	
Allied 360 Construction, LLC	$2,364,321.74	

CONTRACT NUMBER:
The FY22 Munis contract number:
Sub Surface Contracting # 3202929
A.A.C Construction # 3202927

FUNDING SOURCE:
The funding source is:
Water Enterprise Fund/ CIP
FY 2022
Fund Name/Number: Water Enterprise Fund/ 500
Munis Org Name/Number: Water CIP / 5050395
Munis Object Name/Number: WIP Construction / 572970

Funds for this work will be available in Business Unit, Line Item 5050395.572970 in the amount of $1,600,000.00 plus NMGRT upon approval of the BAR Budget Increase.

RECOMMENDATION:

The Water Division recommends:

- Review and approval of award of contracts to Sub Surface Contracting, Inc. and A.A.C Construction, LLC for the FY 21/22 Priority Line Replacement Price Agreement, CIP # 3058 under ITB No. '21/43/B for a total amount of $3,500,000.00 inclusive of NMGRT for FY2021-22.

- Approval of the BAR – Budget Increase in the amount of $3,500,000 from the Water Enterprise Fund cash balance into the Water CIP fund for FY 2022.

- Forwarding and recommendation of approval of award and contract to the Finance Committee for their consideration and approval to the Governing Body for their final consideration and approval.

Log # {Finance use only}:	
Batch # {Finance use only}:	

City of Santa Fe, New Mexico
BUDGET AMENDMENT RESOLUTION (BAR)

DEPARTMENT / DIVISION NAME	DATE
PUD/Water/CIP	8/17/2021

ITEM DESCRIPTION	ORG	OBJECT	PROJECT	INCREASE	DECREASE
EXPENDITURES				{enter as positive #}	{enter as negative #}
Water CIP WIP Construction	5050395	572970	WTR1950535	3,500,000	
REVENUES				{enter as negative #}	{enter as positive #}
				$ 3,500,000	$ -

JUSTIFICATION: *(use additional page if needed)*
--Attach supporting documentation/memo

Budget Increase from Cash Balance in Water Enterprise Fund for Priority Line Replacement

Price Agreements Award of Bid 21/43/B to A.A.C Construction and Sub Surface for

FY 2022 CIP3058

{Complete section below if BAR results in a net change to ANY Fund}

Fund(s) Affected	Fund Balance Increase/(Decrease)
505	(3,500,000)
TOTAL:	**(3,500,000)**

Maya Martinez 8/17/2021
Prepared By {print name} Date

Division Director Signature {optional} Date

Shannon Jones 3/19/2021
Department Director Signature Date

{Use this form for Finance Committee/ City Council agenda items ONLY}

CITY COUNCIL APPROVAL

City Council Approval Date

Agenda Item #:

Andy Hopkins 8/20/21
Andy Hopkins (Aug 20, 2021 11:52 MDT)
Budget Officer Date

Finance Director {≤ $5,000} Date

City Manager {≤ $60,000} Date

Item#**21-0484**
Munis Contract# 3202929

CITY OF SANTA FE

PRIORITY LINE REPLACEMENTPRICE
AGREEMENT

CIP # 3058

THIS AGREEMENT is made and entered into by and between the City of Santa Fe, New Mexico, hereinafter referred to as the "City," and **SUB SURFACE CONTRACTING, INC.**, hereinafter referred to as the Contractor, and is effective as of the date set forth below upon which it is executed by the Parties.

IT IS AGREED BETWEEN THE PARTIES:

1. Scope of Work.

A. The Contractor shall perform the following work and as described is Exhibit "A" attached hereto:

1) The Contractor shall perform all the work required by Water Division as required in the Contract Documents for Priority Line Replacement Contract. The work consists of, but is not limited to furnishing all equipment, labor and materials for the construction and repair of water mains, valves, hydrants, metered water service lines and settings, pressure reducing valves, vaults, and other incidental work such as pavement removal and replacement, traffic control all as required to extend, replace or repair water distribution, water storage, and water supply infrastructure, in accordance with the drawings, specifications, and other Contract Documents. All water piping shall be new, poly-wrapped ductile iron, unless otherwise specified.

2) The Contractor shall be responsible for verifications of all measurements and dimensions for bidding on each subsequent Work Order.

3) The Contractor shall provide and keep at the work site a complete "as built" record set of drawings that shall be corrected daily and shall show every change from the original approved drawings and specifications. These changes shall be forwarded to City periodically. The drawings shall reflect exact and actual "as-built" conditions of construction, installation, and erection as it progresses. Where drawings are not adequate to show "as built" conditions. Contractor shall prepare sketches which delineate the necessary "asbuilt" information. City shall furnish two (2) sets of all paper "blue-line" print "approved" drawings for use in accomplishing specified mark up. Final "as built" drawings shall be delivered to City by Contractor upon completion of the work.

4) The Contractor shall be responsible for maintaining traffic control at the site in conformance with the Manual on Uniform Traffic Control Devices.

5) The Contractor shall be responsible for all permits, fees, and State and City inspections associated with the construction.

6) Incorporation by Reference. All exhibits, addenda, schedules of ITB 21/XX/B attached hereto and all certificates, work order documents, drawings, as-built and other instruments contemplated to be delivered hereunder are hereby expressly made a part of this Agreement as fully as though set forth herein, and all references to this Agreement herein orin any of such writings shall be deemed to refer to and include all of such writings. This Agreement contains the entire agreement between the parties with respect to the subject matter hereof and supersedes all prior agreements and understandings, both written and oral, among theparties with respect to the subject matter hereof. If there is any conflict between such exhibits or addenda and the terms of this Agreement, such exhibits or addenda shall control.

2. Compensation.

A. The City shall pay to the Contractor in full payment for services satisfactorily performed at total amount up to two million seventy four thousand nine hundred twenty seven and ninety five cents ($2,074,927.95). The New Mexico gross receipts tax levied on the amounts payable under this Agreement totaling one hundred seventy five thousand seventy two dollars and five cents ($175,072.05) shall be paid by the City to the Contractor as described in Exhibit A attached hereto. **The total amount payable to the Contractor under this Agreement, including gross receipts tax and expenses, shall not two million two million two hundred and fifty thousand dollars ($2,250,000). This amount is a maximum and not a guarantee that the work assigned to be performed by Contractor under this Agreement shall equal the amount stated herein. The parties do not intend for the Contractor to continue to provide services without compensation when the total compensation amount is reached. Contractor is responsible for notifying the City when the services provided under this Agreement reach the total compensation amount. In no event will the Contractor be paid for services provided in excess of the total compensation amount without this Agreement being amended in writing prior to those services in excess of the total compensation amount being provided.**

B. Payment is subject to availability of funds pursuant to the Appropriations Paragraph set forth below and to any negotiations between the parties from year to year pursuant to Paragraph 1, Scope of Work, and to approval by the City. All invoices MUST BE received by the City no later than thirty 30) days after the termination of the Fiscal Year in which the services were delivered. Invoices received after such date WILL NOT BE PAID.

C. Contractor must submit a detailed statement accounting for all services performed and expenses incurred. If the City finds that the services are not acceptable, within thirty days after the date of receipt of written notice from the Contractor that payment is requested, it shall provide the Contractor a letter of exception explaining the defect or objection to the services, and outlining steps the Contractor may take to provide remedial action. Upon certification by the City that the services have been received and accepted, payment shall be tendered to the Contractor within thirty days after the date of acceptance. If payment is made by mail, the payment shall be deemed tendered on the date it is postmarked. However, the City shall not incur late charges, interest, or penalties for failure to make payment within the time specified herein.

3. Term.

THIS AGREEMENT SHALL NOT BECOME EFFECTIVE UNTIL APPROVED BY THE CITY. This Agreement shall terminate on **June 30, 2025** unless terminated pursuant to paragraph 4 (Termination), or paragraph 5 (Appropriations). In accordance with Section 13-1-150 NMSA 1978, no contract term for a professional services contract, including extensions and renewals, shall exceed four years, except as set forth in Section 13-1-150 NMSA 1978.

4. Termination.

A. Termination. This Agreement may be terminated by either of the parties hereto upon written notice delivered to the other party at least thirty (30) days prior to the intended date of

termination. Except as otherwise allowed or provided under this Agreement, the City sole liability upon such termination shall be to pay for acceptable work performed prior to the Contractor's receipt of the notice of termination, if the City is the terminating party, or the Contractors receipt of the notice of termination, if the Contractor is the terminating party; provided, however, that a notice of termination shall not nullify or otherwise affect either party'sliability for pre-termination defaults under or breaches of this Agreement. The Contractor shall submit an invoice for such work within thirty (30) days of receiving or sending the notice of termination. Notwithstanding the foregoing, this Agreement may be terminated immediately upon written notice to the Contractor if the Contractor becomes unable to perform the services contracted for, as determined by the City or if, during the term of this Agreement, the Contractor or any of its officers, employees or agents is indicted for fraud, embezzlement or other crime dueto misuse of City funds or due to the Appropriations paragraph herein. *THIS PROVISION JS NOT EXCLUSIVE AND DOES NOT WAIVE THE OTHER LEGAL RIGHTS AND REMEDIES CAUSED BY THE CONTRACTOR'S DEFAULT/BREACH OF THIS AGREEMENT.*

B. Termination Management. Immediately upon receipt by either the City or the Contractor of notice of termination of this Agreement, the Contractor shall: 1) not incur any further obligations for salaries, services or any other expenditure of funds under this Agreement withoutwritten approval of the City; 2) comply with all directives issued by the City in the notice oftermination as to the performance of work under this Agreement; and 3) take such action as the City shall direct for the protection, preservation, retention or transfer of all property titled to theCity and records generated under this Agreement. Any non-expendable personal property orequipment provided to or purchased by the Contractor with contract funds shall become property of the City upon termination and shall be submitted to the City as soon as practicable.

5. Appropriations.

The terms of this Agreement are contingent upon sufficient appropriations and authorization being made by the City Council for the performance of this Agreement. If sufficient appropriations and authorization are not made by the City Council, this Agreement shall terminate immediately upon written notice being given by the City to the Contractor. The City's decision asto whether sufficient appropriations are available shall be accepted by the Contractor and shall be final. If the City proposes an amendment to the Agreement to unilaterally reduce funding, the Contractor shall have the option to terminate the Agreement or to agree to the reduced funding, within thirty (30) days of receipt of the proposed amendment.

6. Status of Contractor.

The Contractor and its agents and employees are independent contractors performing professional services for the City and are not employees of the City. The Contractor and its agents and employees shall not accrue leave, retirement, insurance, bonding, use of City vehicles, or anyother benefits afforded to employees of the City as a result of this Agreement. The Contractor acknowledges that all sums received hereunder are reportable by the Contractor for tax purposes, including without limitation, self-employment and business income tax. The Contractor agrees not to purport to bind the City unless the Contractor has express written authority to do so, and then only within the strict limits of that authority.

7. Construction Contract Performance and Payment Bond.

A. When a construction contract is awarded in excess of twenty-five thousand dollars ($25,000), the following bonds or security shall be delivered to the City and shall become binding on the parties upon the execution of the contract. If the Contractor fails to deliver the required performance and payment bonds, the Contractor's bid shall be rejected, its bid security shall be enforced to the extent of actual damages. Award of the contract shall be made pursuant to the

Procurement Code in the following manner:

(1) a performance bond satisfactory to the City, executed by a surety company authorized to do business in this state and said surety to be approved in federal circular 570 as published by the United States treasury department or the state board of finance or the local governing authority, in an amount equal to one hundred percent of the price specifiedin the contract; and

(2) a payment bond satisfactory to the City, executed by a surety company authorized to do business in this state and said surety to be approved in federal circular 570 as published by the United States treasury department or the state board of finance or the local governing authority, in an amount equal to one hundred percent of the price specifiedin the contract, for the protection of all persons supplying labor and material to the contractor or its subcontractors for the performance of the work provided for in the contract.

B. A subcontractor shall provide a performance and payment bond on a public works Building project if the subcontractor's contract for work to be performed on a project is one hundred twenty-five thousand dollars ($125,000) or more.

8. Assignment.

The Contractor shall not assign or transfer any interest in this Agreement or assign any claims for money due or to become due under this Agreement without the prior written approval of the City.

9. Subcontracting.

The Contractor shall not subcontract any portion of the services to be performed under this Agreement without the prior written approval of the City. No such subcontract shall relieve the primary Contractor from its obligations and liabilities under this Agreement, nor shall any subcontract obligate direct payment from the City.

10. Release.

Final payment of the amounts due under this Agreement shall operate as a release of the City, its officers and employees from all liabilities, claims and obligations whatsoever arising from or under this Agreement.

11. Confidentiality.

Any confidential information provided to or developed by the Contractor in the performance of this Agreement shall be kept confidential and shall not be made available to any individual or organization by the Contractor without the prior written approval of the City.

12. Product of Service -- Copyright.

All materials developed or acquired by the Contractor under this Agreement shall becomethe property of the City and shall be delivered to the City no later than the termination date of this Agreement. Nothing developed or produced, in whole or in part, by the Contractor under this Agreement shall be the subject of an application for copyright or other claim of ownership by or on behalf of the Contractor.

13. Conflict of Interest; Governmental Conduct Act.

A. The Contractor represents and warrants that it presently has no interest and, duringthe term of this Agreement, shall not acquire any interest, direct or indirect, which would conflictin any manner or degree with the performance or services required under the Agreement.

B. The Contractor further represents and warrants that it has complied with, and, during the term of this Agreement, will continue to comply with, and that this Agreement complies with all applicable provisions of the Governmental Conduct Act, Chapter 10, Article 16 NMSA 1978.

C. Contractor's representations and warranties in Paragraphs A and B of this Article 13 are material representations of fact upon which the City relied when this Agreement was enteredinto by the parties. Contractor shall provide immediate written notice to the City if, at any timeduring the term of this Agreement, Contractor learns that Contractor's representations and warranties in Paragraphs A and B of this Article 13 were erroneous on the effective date of this Agreement or have become erroneous by reason of new or changed circumstances. If it is laterdetermined that Contractor's representations and warranties in Paragraphs A and B of this Article 13 were erroneous on the effective date of this Agreement or have become erroneous by reason ofnew or changed circumstances, in addition to other remedies available to the City and notwithstanding anything in the Agreement to the contrary, the City may immediately terminate the Agreement.

D. All terms defined in the Governmental Conduct Act have the same meaning in thissection.

14. Amendment.

A. This Agreement shall not be altered, changed or amended except by instrument in writing executed by the parties hereto and all other required signatories.

B. If the City proposes an amendment to the Agreement to unilaterally reduce funding due to budget or other considerations, the Contractor shall, within thirty (30) days of receipt of the proposed Amendment, have the option to terminate the Agreement, pursuant to the termination provisions as set forth in Article 4 herein, or to agree to the reduced funding.

15. Change Orders.

A. Changes. The Contractor may only make changes or revisions within the Scope of Work as defined by Article 1 and/or Exhibit 1 after receipt of written approval by the City Manager or his/her designee. Such change may only be made to Tasks or Sub-Task as defined in the Scope of Work. Under no circumstance shall such change affect the:

1) Deliverable requirements, as outlined in the Scope of Work;
2) Due date of any Deliverable, as outlined in the Scope of Work;
3) Compensation of any Deliverable, as outlined in the Scope of Work;
4) Agreement compensation, as outlined in Article 2; or
5) Agreement termination, as outlined in Article 4.

B. Change Request Process. In the event that circumstances warrant a change to accomplish the Scope of Work as described above, a Change Request shall be submitted that meets the following criteria:

1) The Project Manager shall draft a written Change Request for review and approval by the City Manager to include:
   (a) the name of the person requesting the change;
   (b) a summary of the required change;
   (c) the start date for the change;
   (d) the reason and necessity for change;
   (e) the elements to be altered; and

(f) The impact of the change.

2) The City Manager shall provide a written decision on the Change Request to the Contractor within a maximum of ten (10) Business Days of receipt of the Change Request. All decisions made by the City Manager are final. Change Requests, once approved, become a part of the Agreement and become binding as a part of the original Agreement.

16. Merger.

This Agreement incorporates all the Agreements, covenants and understandings between the parties hereto concerning the subject matter hereof, and all such covenants, Agreements and understandings have been merged into this written Agreement. No prior Agreement or understanding, oral or otherwise, of the parties or their agents shall be valid or enforceable unless embodied in this Agreement.

17. Penalties for violation of law.

The Procurement Code, Sections 13-1-28 through 13-1-199, NMSA 1978, imposes civil and criminal penalties for its violation. In addition, the New Mexico criminal statutes imposefelony penalties for illegal bribes, gratuities and kickbacks.

18. Equal Opportunity Compliance.

The Contractor agrees to abide by all federal and state laws and rules and regulations, andSanta Fe City Code, pertaining to equal employment opportunity. In accordance with all such laws of the State of New Mexico, the Contractor assures that no person in the United States shall, on the grounds of race, religion, color, national origin, ancestry, sex, age, physical or mental handicap, or serious medical condition, spousal affiliation, sexual orientation or gender identity, be excluded from employment with or participation in, be denied the benefits of, or be otherwise subjected to discrimination under any program or activity performed under this Agreement. If Contractor is found not to be in compliance with these requirements during the life of this Agreement, Contractor agrees to take appropriate steps to correct these deficiencies.

19. Applicable Law.

The laws of the State of New Mexico shall govern this Agreement, without giving effect to its choice of law provisions. Venue shall be proper only in a New Mexico court of competent jurisdiction in accordance with Section 38-3-1 (G) NMSA 1978. By execution of this Agreement, Contractor acknowledges and agrees to the jurisdiction of the courts of the State of New Mexicoover any and all lawsuits arising under or out of any term of this Agreement.

20. Workers Compensation.

The Contractor agrees to comply with state laws and rules applicable to workers compensation benefits for its employees. If the Contractor fails to comply with the Workers Compensation Act and applicable rules when required to do so, this Agreement may be terminated by the City.

21. Professional Liability Insurance. Contractor shall maintain professional liability insurance throughout the term of this Agreement providing a minimum coverage in the amount required under the New Mexico Tort Claims Act. The Contractor shall furnish the City with proofof insurance of Contractor's compliance with the provisions of this section as a condition prior toperforming services under this Agreement.

22. Other Insurance

If the Services contemplated under this Agreement will be performed on or in City facilitiesor property, Contractor shall maintain in force during the entire term of this Agreement, the following insurance coverage(s), naming the City as additional insured,

A. Commercial General Liability insurance shall be written on an occurrence basis and be a broad as ISO Form CG 00 01 with limits not less than $2,000,000 per occurrence and #2,000,000 in the aggregate for claims against bodily injury, personal and advertising injury, and property damage. Said policy shall include broad from Contractual Liability coverage and be endorsed to name the City of Santa Fe, their officials, officers, employees and agents as additionalinsureds.

B. Business Automobile Liability insurance for all owned, non-owned automobiles,with a combined single limit not less than $1,000,000 per accident.

C. Broader Coverage and Limits. The insurance requirements under this Agreement shall be the greater of (1) the minimum coverage and limits specified in this Agreement, or (2) the broader coverage and maximum limits of coverage of any insurance policy or proceeds available tothe Named Insured. It is agreed that these insurance requirements shall not in any way act to reduce coverage that is broader or that includes higher limits than the minimums required herein. No representation is made that minimum insurance requirements of this Agreement are sufficient to cover the obligations of Contractor hereunder.

D. Contractor shall maintain the above insurance for the term of this Agreement and name the City as an additional insured and provide for 30 days cancellation notice on any Certificate of Insurance form furnished by Contractor. Such certificate shall also specifically state the coverage provided under the policy is primary over any other valid and collectible insurance and provide a waiver of subrogation.

23. Records and Financial Audit.

The Contractor shall maintain detailed time and expenditure records that indicate the date; time, nature and cost of services rendered during the Agreement's term and effect and retain them for a period of three (3) years from the date of final payment under this Agreement. The records shall be subject to inspection by the City. The City shall have the right to audit bi11ings both before and after payment. Payment under this Agreement shall not foreclose the right of the City to recover excessive or illegal payments.

24. Indemnification.

The Contractor shall defend, indemnify and hold harmless the City from all actions, proceeding, claims, demands, costs, damages, attorney's fees and all other liabilities and expenses of any kind from any source which may arise out of the performance of this Agreement, caused by the negligent act or failure to act of the Contractor, its officers, employees, servants, subcontractors or agents, or if caused by the actions of any client of the Contractor resulting in injury or damageto persons or property during the time when the Contractor or any officer, agent, employee, servantor subcontractor thereof has or is performing services pursuant to this Agreement. In the event that any action, suit or proceeding related to the services performed by the Contractor or any officer, agent, employee, servant or subcontractor under this Agreement is brought against the Contractor,the Contractor shall, as soon as practicable but no later than two (2) days after it receives notice thereof, notify the legal counsel of the City.

25. New Mexico Tort Claims Act

Any liability incurred by the City of Santa Fe in connection with this Agreement is subjectto the immunities and limitations of the New Mexico Tort Claims Act, Section 41-4-1, et. seq.NMSA 1978, as

amended. The city and its "public employees" as defined in the New Mexico Tort Claims Act, do not waive sovereign immunity, do not waive any defense and do not waive anylimitation of liability pursuant to law. No provision in this Agreement modifies or waives any provision of the New Mexico Tort Claims Act.

26. Invalid Term or Condition.

If any term or condition of this Agreement shall be held invalid or unenforceable, the remainder of this Agreement shall not be affected and shall be valid and enforceable.

27. Enforcement of Agreement.

A party's failure to require strict performance of any provision of this Agreement shall notwaive or diminish that party's right thereafter to demand strict compliance with that or any other provision. No waiver by a party of any of its rights under this Agreement shall be effective unlessexpress and in writing, and no effective waiver by a party of any of its rights shall be effective to waive any other rights.

28. Notices.

Any notice required to be given to either party by this Agreement shall be in writing andshall be delivered in person, by courier service or by U.S. mail, either first class or certified, return receipt requested, postage prepaid, as follows:

To the City:
Water Division Director
801 W. San Mateo
Santa Fe, NM 87505

To the Contractor:
Sub Surface Contracting Inc.
27 A Paseo de River
Santa Fe, NM 87507

29. Authority.

If Contractor is other than a natural person, the individual(s) signing this Agreement on behalf of Contractor represents and warrants that he or she has the power and authority to bindContractor, and that no further action, resolution, or approval from Contractor is necessary to enterinto a binding contract.

IN WITNESS WHEREOF, the Parties have executed this Agreement as of the date of the signatureby the required approval authorities below.

CITY OF SANTA FE:

ALAN WEBBER, MAYOR

DATE: Sep 10, 2021

CONTRACTOR:

Neal Keiper
Neal Keiper (Aug 19, 2021 13:26 MDT)
NAME

President
TITLE

DATE: Aug 19, 2021

CRS# 02104256000
Registration # 46991

ATTEST:

Kristine Mihelcic
Kristine Mihelcic (Sep 15, 2021 12:12 MDT)

KRISTINE BUSTOS MIHELCIC, CITY CLERK
GB MTG 09/08/2021

CITY ATTORNEY'S OFFICE:

Marcos Martinez
Marcos Martinez (Aug 19, 2021 10:05 MDT)

SENIOR ASSISTANT CITY ATTORNEY

APPROVED FOR FINANCES:

Mary McCoy

MARY MCCOY, FINANCE DIRECTOR

5050395.572970
Org. Name/Org#

AJH
AJH

				AAC		Sub Surface	
Bid Item	Approx. QTY.	Unit	Article and Description	Unit Price	Item Price	Unit Price	Item Price
5	35	LF	2" PVC Water Main, cip, all lengths	$ 32.50	$ 1,137.50	$ 30.00	$ 1,050.00
10	35	LF	4" PVC Water Main, cip, <100'	$ 38.00	$ 1,330.00	$ 36.00	$ 1,260.00
15	100	LF	4" PVC Water Main, cip, >100'	$ 36.00	$ 3,600.00	$ 34.00	$ 3,400.00
20	50	LF	6" PVC Water Main, cip, <100'	$ 43.50	$ 2,175.00	$ 42.00	$ 2,100.00
25	150	LF	6" PVC Water Main, cip, >100'	$ 40.50	$ 6,075.00	$ 39.00	$ 5,850.00
30	75	LF	8" PVC Water Main, cip, <100'	$ 49.00	$ 3,675.00	$ 48.00	$ 3,600.00
35	200	LF	8" PVC Water Main, cip, >100'	$ 46.75	$ 9,350.00	$ 45.50	$ 9,100.00
40	35	LF	10" PVC Water Main, cip, <100'	$ 56.00	$ 1,960.00	$ 52.00	$ 1,820.00
45	100	LF	10" PVC Water Main, cip, >100'	$ 52.00	$ 5,200.00	$ 49.00	$ 4,900.00
50	50	LF	12" PVC Water Main, cip, <100'	$ 69.37	$ 3,468.50	$ 66.75	$ 3,337.50
55	150	LF	12" PVC Water Main, cip, >100'	$ 66.25	$ 9,937.50	$ 64.50	$ 9,675.00
60	50	LF	14" PVC Water Main, cip	$ 87.00	$ 4,350.00	$ 79.00	$ 3,950.00
65	50	LF	16" PVC Water Main, cip	$ 103.50	$ 5,175.00	$ 97.00	$ 4,850.00
70	50	LF	24" PVC Water Main, cip	$ 167.50	$ 8,375.00	$ 100.00	$ 5,000.00
75	35	LF	2" DI Water Main, cip, all lengths	$ 42.00	$ 1,470.00	$ -	$ -
80	50	LF	4" DI Water Main, cip, <100'	$ 63.75	$ 3,187.50	$ 57.50	$ 2,875.00
85	100	LF	4" DI Water Main, cip, >100'	$ 56.50	$ 5,650.00	$ 56.00	$ 5,600.00
90	75	LF	6" DI Water Main, cip, <100'	$ 63.50	$ 4,762.50	$ 53.00	$ 3,975.00
95	250	LF	6" DI Water Main, cip, >100'	$ 56.50	$ 14,125.00	$ 51.00	$ 12,750.00
100	75	LF	8" DI Water Main, cip, <100'	$ 68.00	$ 5,100.00	$ 60.25	$ 4,518.75
105	250	LF	8" DI Water Main, cip, >100'	$ 73.00	$ 18,250.00	$ 58.00	$ 14,500.00
110	35	LF	10" DI Water Main, cip, <100'	$ 77.00	$ 2,695.00	$ 65.00	$ 2,275.00
115	100	LF	10" DI Water Main, cip, >100'	$ 74.00	$ 7,400.00	$ 63.00	$ 6,300.00
120	50	LF	12" DI Water Main, cip, <100'	$ 99.00	$ 4,950.00	$ 78.00	$ 3,900.00
125	100	LF	12" DI Water Main, cip, >100'	$ 89.50	$ 8,950.00	$ 74.00	$ 7,400.00
130	50	LF	14" DI Water Main, cip	$ 115.50	$ 5,775.00	$ 87.00	$ 4,350.00
135	50	LF	16" DI Water Main, cip	$ 139.50	$ 6,975.00	$ 101.00	$ 5,050.00
140	50	LF	24" DI Water Main, cip	$ 207.00	$ 10,350.00	$ 159.00	$ 7,950.00
145	75	LF	Extra Pay for Trench Depth, 6'-8'	$ 41.00	$ 3,075.00	$ 8.00	$ 600.00
150	50	LF	Extra Pay for Trench Depth, 8'-10'	$ 98.00	$ 4,900.00	$ 12.00	$ 600.00
155	25	LF	Extra Pay for Trench Depth, 10'-14'	$ 154.00	$ 3,850.00	$ 30.00	$ 750.00
160	20	CY	Rock Excavation	$ 325.00	$ 6,500.00	$ 220.00	$ 4,400.00
165	300	CY	Exploratory Excavation (as SDCW Approved)	$ 50.00	$ 15,000.00	$ 65.00	$ 19,500.00
170	75	CY	Imported Backfill (as SDCW Approved)	$ 36.00	$ 2,700.00	$ 24.00	$ 1,800.00
175	1,000	LB	Fitting Installation	$ 4.50	$ 4,500.00	$ 4.00	$ 4,000.00
180	500	LB	Fitting Insertion	$ 26.00	$ 13,000.00	$ 34.00	$ 17,000.00
185	25	EA	4" Retainer Ring/ Bolt on Flange	$ 60.00	$ 1,500.00	$ 65.00	$ 1,625.00
190	50	EA	6" Retainer Ring/ Bolt on Flange	$ 86.50	$ 4,325.00	$ 105.00	$ 5,250.00
195	50	EA	8" Retainer Ring/ Bolt on Flange	$ 98.50	$ 4,925.00	$ 119.00	$ 5,950.00
200	20	EA	10" Retainer Ring/ Bolt on Flange	$ 123.00	$ 2,460.00	$ 121.00	$ 2,420.00
205	20	EA	12" Retainer Ring/ Bolt on Flange	$ 147.50	$ 2,950.00	$ 145.00	$ 2,900.00
210	20	EA	14" Retainer Ring/ Bolt on Flange	$ 184.50	$ 3,690.00	$ 179.00	$ 3,580.00
215	10	EA	16" Retainer Ring/ Bolt on Flange	$ 275.00	$ 2,750.00	$ 250.00	$ 2,500.00
220	25	EA	4"Joint Harness	$ 70.50	$ 1,762.50	$ 40.00	$ 1,000.00
225	50	EA	6" Joint Harness	$ 95.00	$ 4,750.00	$ 110.00	$ 5,500.00
230	50	EA	8" Joint Harness	$ 125.00	$ 6,250.00	$ 120.00	$ 6,000.00
235	20	EA	10" Joint Harness	$ 160.00	$ 3,200.00	$ 160.00	$ 3,200.00
240	20	EA	12" Joint Harness	$ 192.50	$ 3,850.00	$ 180.00	$ 3,600.00
245	20	EA	14" Joint Harness	$ 370.00	$ 7,400.00	$ 375.00	$ 7,500.00
250	10	EA	16" Joint Harness	$ 427.50	$ 4,275.00	$ 410.00	$ 4,100.00
255	10	CY	Concrete Thrust Blocking (as SDCW Approved)	$ 315.00	$ 3,150.00	$ 250.00	$ 2,500.00
260	2	EA	Tapping Sleeve w/ Tap, 4" X 4"	$ 1,350.00	$ 2,700.00	$ 1,350.00	$ 2,700.00
265	4	EA	Tapping Sleeve w/ Tap, 6" X 4" - 6"	$ 1,567.50	$ 6,270.00	$ 1,500.00	$ 6,000.00
270	4	EA	Tapping Sleeve w/ Tap, 8" X 4" - 8"	$ 1,900.00	$ 7,600.00	$ 1,800.00	$ 7,200.00

				AAC		Sub Surface	
Bid Item	**Approx. QTY.**	**Unit**	**Article and Description**	**Unit Price**	Item Price	**Unit Price**	Item Price
275	2	EA	Tapping Sleeve w/ Tap, 10" X 4" - 10"	**$ 2,250.00**	$ 4,500.00	**$ 2,100.00**	$ 4,200.00
280	4	EA	Tapping Sleeve w/ Tap, 12" X 4" - 12"	**$ 2,650.00**	$ 10,600.00	**$ 2,300.00**	$ 9,200.00
285	1	EA	Tapping Sleeve w/Tap, 20" X 4" - 20"	**$ 4,747.50**	$ 4,747.50	**$ 4,200.00**	$ 4,200.00
290	1	EA	Non-Pressurized Connections, 2" line	**$ 1,650.00**	$ 1,650.00	**$ 1,500.00**	$ 1,500.00
295	1	EA	Non-Pressurized Connections, 4"-10" line	**$ 3,587.50**	$ 3,587.50	**$ 3,100.00**	$ 3,100.00
300	1	EA	Non-Pressurized Connections, 12"-20" line	**$ 6,050.00**	$ 6,050.00	**$ 4,100.00**	$ 4,100.00
305	2	EA	2" CL125 Gate Valves, cip.	**$ 807.50**	$ 1,615.00	**$ 850.00**	$ 1,700.00
310	2	EA	4" CL125 Gate Valves, cip.	**$ 925.00**	$ 1,850.00	**$ 1,200.00**	$ 2,400.00
315	5	EA	6" CL125 Gate Valves, cip.	**$ 1,200.00**	$ 6,000.00	**$ 1,525.00**	$ 7,625.00
320	5	EA	8" CL125 Gate Valves, cip.	**$ 1,650.00**	$ 8,250.00	**$ 1,725.00**	$ 8,625.00
325	1	EA	10" CL125 Gate Valves, cip.	**$ 2,315.00**	$ 2,315.00	**$ 2,325.00**	$ 2,325.00
330	2	EA	12" CL125 Gate Valves, cip.	**$ 2,900.00**	$ 5,800.00	**$ 2,800.00**	$ 5,600.00
335	1	EA	2" CL250 Gate Valves, cip.	**$ 792.50**	$ 792.50	**$ 700.00**	$ 700.00
340	1	EA	4" CL250 Gate Valves, cip.	**$ 1,837.50**	$ 1,837.50	**$ 1,800.00**	$ 1,800.00
345	10	EA	6" CL250 Gate Valves, cip.	**$ 1,950.00**	$ 19,500.00	**$ 1,825.00**	$ 18,250.00
350	3	EA	8" CL250 Gate Valves, cip.	**$ 2,475.00**	$ 7,425.00	**$ 2,000.00**	$ 6,000.00
355	1	EA	10" CL250 Gate Valves, cip.	**$ 4,000.00**	$ 4,000.00	**$ 3,700.00**	$ 3,700.00
360	1	EA	12" CL250 Gate Valves, cip.	**$ 4,552.50**	$ 4,552.50	**$ 4,200.00**	$ 4,200.00
365	1	EA	16" CL250 Gate Valves, cip.	**$ 7,025.00**	$ 7,025.00	**$ 6,500.00**	$ 6,500.00
370	1	EA	20" CL250 Gate Valves, cip.	**$ 16,755.00**	$ 16,755.00	**$ 16,190.00**	$ 16,190.00
375	1	EA	24" CL250 Gate Valves, cip.	**$ 23,750.00**	$ 23,750.00	**$ 23,250.00**	$ 23,250.00
380	1	EA	12" CL250 Butterfly Valves, cip.	**$ 2,800.00**	$ 2,800.00	**$ 2,800.00**	$ 2,800.00
385	1	EA	16" CL250 Butterfly Valves, cip.	**$ 4,975.00**	$ 4,975.00	**$ 4,850.00**	$ 4,850.00
390	1	EA	20" CL250 Butterfly Valves, cip.	**$ 7,680.00**	$ 7,680.00	**$ 6,600.00**	$ 6,600.00
395	1	EA	24" CL250 Butterfly Valves, cip.	**$ 10,042.50**	$ 10,042.50	**$ 9,125.00**	$ 9,125.00
400	5	EA	Fire Hydrant, 5' or less bury, cip.	**$ 2,987.50**	$ 14,937.50	**$ 3,200.00**	$ 16,000.00
405	2	EA	Fire Hydrant Extension, 6" or 12" length	**$ 767.50**	$ 1,535.00	**$ 700.00**	$ 1,400.00
410	1	EA	Fire Hydrant Extension, 18" or 24" length	**$ 1,017.50**	$ 1,017.50	**$ 920.00**	$ 920.00
415	1	EA	Fire Hydrant Remove & Relay	**$ 1,350.00**	$ 1,350.00	**$ 700.00**	$ 700.00
420	1	EA	Fire Hydrant Remove & Return	**$ 887.50**	$ 887.50	**$ 575.00**	$ 575.00
425	1	EA	2 1/4" Flush Hydrant	**$ 1,657.50**	$ 1,657.50	**$ 1,500.00**	$ 1,500.00
430	1	EA	2" Blow-Off Valve Installation	**$ 1,420.00**	$ 1,420.00	**$ 1,300.00**	$ 1,300.00
435	1	EA	2" Pressure Relief Valve, cip.	**$ 6,780.00**	$ 6,780.00	**$ 6,725.00**	$ 6,725.00
440	1	EA	3" Pressure Relief Valve, cip.	**$ 7,065.50**	$ 7,065.50	**$ 6,950.00**	$ 6,950.00
445	1	EA	4" Pressure Relief Valve, cip.	**$ 8,432.50**	$ 8,432.50	**$ 8,195.00**	$ 8,195.00
450	1	EA	6" Pressure Relief Valve, cip.	**$ 11,091.50**	$ 11,091.50	**$ 10,800.00**	$ 10,800.00
455	1	EA	8" Pressure Relief Valve, cip.	**$ 15,362.50**	$ 15,362.50	**$ 14,925.00**	$ 14,925.00
460	1	EA	12" Pressure Relief Valve, cip.	**$ 29,837.50**	$ 29,837.50	**$ 29,500.00**	$ 29,500.00
465	1	EA	Air & Vacuum Release Valve, 1"	**$ 2,970.00**	$ 2,970.00	**$ 2,750.00**	$ 2,750.00
470	1	EA	Air & Vacuum Release Valve, 2"	**$ 4,245.00**	$ 4,245.00	**$ 3,940.00**	$ 3,940.00
475	1	EA	Install City of Santa Fe Furnished Valve/Meter, 2" - 4"	**$ 825.00**	$ 825.00	**$ 450.00**	$ 450.00
480	1	EA	Install City of Santa Fe Furnished Valve/Meter, 6" - 8"	**$ 1,025.00**	$ 1,025.00	**$ 550.00**	$ 550.00
485	1	EA	Install City of Santa Fe Furnished Valve/Meter, 10"-12"	**$ 1,275.00**	$ 1,275.00	**$ 750.00**	$ 750.00
490	1	EA	Metered 2" Bypass – Vault Installation	**$ 4,000.00**	$ 4,000.00	**$ 3,185.00**	$ 3,185.00
495	20	EA	Valve Box, cip.	**$ 575.00**	$ 11,500.00	**$ 625.00**	$ 12,500.00
500	5	EA	Valve Box Replacement	**$ 750.00**	$ 3,750.00	**$ 775.00**	$ 3,875.00
505	5	EA	Valve Box Removal of Existing	**$ 425.00**	$ 2,125.00	**$ 325.00**	$ 1,625.00
510	3	EA	Valve Box Adjustment	**$ 600.00**	$ 1,800.00	**$ 550.00**	$ 1,650.00
515	1	EA	Valve Stem Extension, 0'-4' Depth	**$ 200.00**	$ 200.00	**$ 250.00**	$ 250.00
520	4	VF	Precast 4' Diameter Pit w/ Lid Min. 4' Depth	**$ 925.00**	$ 3,700.00	**$ 825.00**	$ 3,300.00
525	8	VF	Precast 6' Diameter Pit w/ Lid Min. 4' Depth	**$ 1,000.00**	$ 8,000.00	**$ 1,050.00**	$ 8,400.00
530	8	VF	Precast 8' Diameter Pit w/ Lid Min. 4' Depth	**$ 1,500.00**	$ 12,000.00	**$ 1,075.00**	$ 8,600.00
535	7	CY	Cast-In-Place RCP Vault w/ Lid	**$ 1,000.00**	$ 7,000.00	**$ 1,025.00**	$ 7,175.00
540	1	EA	Prefabricated Vault, 4' X 8'	**$ 8,900.00**	$ 8,900.00	**$ 8,995.00**	$ 8,995.00

				AAC		Sub Surface	
Bid Item	**Approx. QTY.**	**Unit**	**Article and Description**	**Unit Price**	Item Price	**Unit Price**	Item Price
545	1	ACRE	Native Seeding	**$ 2,600.00**	$ 2,600.00	**$ 2,275.00**	$ 2,275.00
550	1	EA	Bollards (pair)	**$ 1,180.00**	$ 1,180.00	**$ 975.00**	$ 975.00
555	18	LF	4" Steel Casing	**$ 31.37**	$ 564.66	**$ 95.00**	$ 1,710.00
560	18	LF	4" PVC Casing	**$ 15.40**	$ 277.20	**$ 75.00**	$ 1,350.00
565	18	LF	14" Steel Casing	**$ 107.43**	$ 1,933.74	**$ 175.00**	$ 3,150.00
570	18	LF	16" Steel Casing	**$ 124.02**	$ 2,232.36	**$ 200.00**	$ 3,600.00
575	18	LF	18" Steel Casing	**$ 144.03**	$ 2,592.54	**$ 275.00**	$ 4,950.00
580	18	LF	22" Steel Casing	**$ 234.94**	$ 4,228.92	**$ 300.00**	$ 5,400.00
585	18	LF	26" Steel Casing	**$ 290.67**	$ 5,232.06	**$ 400.00**	$ 7,200.00
590	18	LF	28" Steel Casing	**$ 187.04**	$ 3,366.72	**$ 450.00**	$ 8,100.00
595	18	LF	30" Steel Casing	**$ 187.04**	$ 3,366.72	**$ 450.00**	$ 8,100.00
600	18	LF	36" Steel Casing	**$ 287.03**	$ 5,166.54	**$ 500.00**	$ 9,000.00
605	50	DIA-IN- LF	Bore & Jack Casing Pipe	**$ 575.00**	$ 28,750.00	**$ 40.00**	$ 2,000.00
610	18	LF	Open Cut Casing Pipe Installation, < 6' Deep	**$ 62.00**	$ 1,116.00	**$ 39.00**	$ 702.00
615	25	SY	Asphalt Pavement Removal & Disposal, <2”	**$ 29.50**	$ 737.50	**$ 65.00**	$ 1,625.00
620	200	SY	Asphalt Pavement Removal & Disposal, 2”-6”	**$ 17.70**	$ 3,540.00	**$ 65.00**	$ 13,000.00
625	10	SY	Concrete Pavement Removal & Disposal, <2”	**$ 97.50**	$ 975.00	**$ 90.00**	$ 900.00
630	10	SY	Concrete Pavement Removal & Disposal, 2”-6”	**$ 132.50**	$ 1,325.00	**$ 95.00**	$ 950.00
635	50	LF	Concrete Curb and Gutter Removal & Disposal	**$ 12.00**	$ 600.00	**$ 25.00**	$ 1,250.00
640	10	SY	Concrete Sidewalk Removal & Disposal	**$ 65.00**	$ 650.00	**$ 30.00**	$ 300.00
645	50	SY	Replace City Street Pavement w/o Laydown Machine, Virgin Asphalt	**$ 74.50**	$ 3,725.00	**$ 75.00**	$ 3,750.00
650	50	SY	Replace City Street Pavement w/o Laydown Machine, Recycled Asphalt	**$ 74.50**	$ 3,725.00	**$ 75.00**	$ 3,750.00
655	50	SY	Replace City Street Pavement with Laydown Machine, Virgin Asphalt	**$ 72.00**	$ 3,600.00	**$ 75.00**	$ 3,750.00
660	10	SY	Replace City Street Pavement with Laydown Machine, Recycled Asphalt	**$ 84.96**	$ 849.60	**$ 75.00**	$ 750.00
665	10	SY	Replace City Street Pavement with Temporary Cold Mix	**$ 167.56**	$ 1,675.60	**$ 75.00**	$ 750.00
670	100	SY	Replace Non-City Street Pavement w/o Laydown Machine, Virgin Asphalt	**$ 74.50**	$ 7,450.00	**$ 75.00**	$ 7,500.00
675	10	SY	Replace Non-City Street Pavement w/o Laydown Machine, Recycled Asphalt	**$ 74.50**	$ 745.00	**$ 75.00**	$ 750.00
680	10	SY	Replace Non-City Street Pavement with Laydown Machine, Virgin Asphalt	**$ 92.00**	$ 920.00	**$ 75.00**	$ 750.00
685	10	SY	Replace Non-City Street Pavement with Laydown Machine, Recycled Asphalt	**$ 92.00**	$ 920.00	**$ 75.00**	$ 750.00
690	1	SY	Replace Non-City Street Pavement with Temporary Cold Mix	**$ 167.56**	$ 167.56	**$ 75.00**	$ 75.00
695	10	SY	Replace Concrete Pavement	**$ 261.50**	$ 2,615.00	**$ 275.00**	$ 2,750.00
700	50	LF	Replace Concrete Curb & Gutter	**$ 45.00**	$ 2,250.00	**$ 45.00**	$ 2,250.00
705	10	SY	Replace Concrete Sidewalk	**$ 155.00**	$ 1,550.00	**$ 170.00**	$ 1,700.00
710	10	CY	Replace Gravel Surface, 0”-2”	**$ 56.00**	$ 560.00	**$ 85.00**	$ 850.00
715	10	CY	Replace Gravel Surface, 2”-4”	**$ 66.00**	$ 660.00	**$ 120.00**	$ 1,200.00
720	150	SY	Base course/Gravel (crushed or landscape), 0’-3”	**$ 34.00**	$ 5,100.00	**$ 35.00**	$ 5,250.00
725	50	SY	Base course/Gravel (crushed or landscape), 3”-6”	**$ 45.00**	$ 2,250.00	**$ 45.00**	$ 2,250.00
730	4	EA	Service, 3/4" Single, New Main	**$ 1,262.50**	$ 5,050.00	**$ 1,475.00**	$ 5,900.00
735	2	EA	Service, 3/4" Double, New Main	**$ 1,662.50**	$ 3,325.00	**$ 1,775.00**	$ 3,550.00
740	2	EA	Service, 1", New Main	**$ 1,887.50**	$ 3,775.00	**$ 1,825.00**	$ 3,650.00
745	1	EA	Service, 1 1/2", New Main	**$ 3,670.00**	$ 3,670.00	**$ 3,450.00**	$ 3,450.00
750	1	EA	Service, 2", New Main	**$ 3,985.00**	$ 3,985.00	**$ 3,870.00**	$ 3,870.00
755	5	EA	Service, 3/4" Single, Existing Main	**$ 1,450.00**	$ 7,250.00	**$ 1,475.00**	$ 7,375.00
760	2	EA	Service, 3/4" Double, Existing Main	**$ 1,912.50**	$ 3,825.00	**$ 1,775.00**	$ 3,550.00
765	1	EA	Service, 1", Existing Main	**$ 1,900.00**	$ 1,900.00	**$ 1,825.00**	$ 1,825.00
770	1	EA	Service, 1 1/2", Existing Main	**$ 3,670.00**	$ 3,670.00	**$ 3,450.00**	$ 3,450.00
775	1	EA	Service, 2", Existing Main	**$ 4,300.00**	$ 4,300.00	**$ 3,870.00**	$ 3,870.00
780	5	EA	Service Replacement, 3/4"	**$ 1,602.50**	$ 8,012.50	**$ 1,475.00**	$ 7,375.00
785	2	EA	Service Replacement, Double, 3/4"	**$ 1,950.00**	$ 3,900.00	**$ 1,775.00**	$ 3,550.00
790	1	EA	Service Replacement, 1”	**$ 2,100.00**	$ 2,100.00	**$ 1,825.00**	$ 1,825.00

				AAC		Sub Surface	
Bid Item	**Approx. QTY.**	**Unit**	**Article and Description**	**Unit Price**	Item Price	**Unit Price**	Item Price
795	1	EA	Service Replacement, 1 1/2"	**$ 3,875.00**	$ 3,875.00	**$ 3,450.00**	$ 3,450.00
800	1	EA	Service Replacement, 2"	**$ 4,512.00**	$ 4,512.00	**$ 3,870.00**	$ 3,870.00
805	3	EA	Meter Box Relocation/Replacement, 3/4"	**$ 1,000.00**	$ 3,000.00	**$ 895.00**	$ 2,685.00
810	1	EA	Meter Box Relocation/Replacement, 1"	**$ 1,150.00**	$ 1,150.00	**$ 915.00**	$ 915.00
815	1	EA	Meter Box Relocation/Replacement, 1-1/2"	**$ 1,800.00**	$ 1,800.00	**$ 1,400.00**	$ 1,400.00
820	1	EA	Meter Box Relocation/Replacement, 2"	**$ 1,900.00**	$ 1,900.00	**$ 1,400.00**	$ 1,400.00
825	5	EA	Service Transfer, 3/4"	**$ 812.50**	$ 4,062.50	**$ 725.00**	$ 3,625.00
830	2	EA	Service Transfer, 1"	**$ 912.50**	$ 1,825.00	**$ 825.00**	$ 1,650.00
835	1	EA	Service Transfer, 1 1/2"	**$ 1,112.50**	$ 1,112.50	**$ 925.00**	$ 925.00
840	1	EA	Service Transfer at Main, 2"	**$ 1,325.00**	$ 1,325.00	**$ 975.00**	$ 975.00
845	1	EA	Retire Existing Service at Main, 3/4"- 2"	**$ 962.50**	$ 962.50	**$ 725.00**	$ 725.00
850	1	EA	Retire Existing Meter Box & Setting	**$ 437.50**	$ 437.50	**$ 525.00**	$ 525.00
855	1	EA	Adjust Meter Box To Grade	**$ 412.50**	$ 412.50	**$ 425.00**	$ 425.00
860	11	EA	Service Saddle, 3/4" Tap, 4"-12" Main	**$ 500.00**	$ 5,500.00	**$ 650.00**	$ 7,150.00
865	4	EA	Service Saddle, 1" Tap, 4"-12" Main	**$ 462.50**	$ 1,850.00	**$ 675.00**	$ 2,700.00
870	3	EA	Service Saddle, 1 1/2" Tap, 4"-12" Main	**$ 562.50**	$ 1,687.50	**$ 750.00**	$ 2,250.00
875	3	EA	Service Saddle, 2" Tap, 4"-12" Main	**$ 650.00**	$ 1,950.00	**$ 775.00**	$ 2,325.00
880	100	LF	Service Tubing, 3/4"	**$ 28.75**	$ 2,875.00	**$ 31.50**	$ 3,150.00
885	100	LF	Service Tubing, 1"	**$ 34.12**	$ 3,412.00	**$ 33.75**	$ 3,375.00
890	100	LF	Service Tubing, 1 1/2"	**$ 46.50**	$ 4,650.00	**$ 44.00**	$ 4,400.00
895	25	LF	Service Tubing, 2"	**$ 65.50**	$ 1,637.50	**$ 53.00**	$ 1,325.00
900	1	EA	Air and Vacuum Valve (individual)	**$ 450.00**	$ 450.00	**$ 1,550.00**	$ 1,550.00
905	1	GROUP OF 10	Air and Vacuum Valves	**$ 8,045.00**	$ 8,045.00	**$ 15,500.00**	$ 15,500.00
910	1	EA	Automatic Flushing Valve	**$ 5,867.50**	$ 5,867.50	**$ 4,350.00**	$ 4,350.00
915	$20,000	%	Materials Mark-Up Over Invoice	**$ 3,600.00**	$ 3,600.00	**$ 1,500.00**	$ 1,500.00
920	$8,000	%	Traffic Control Mark-Up Over Invoice	**$ 1,440.00**	$ 1,440.00	**$ 1,200.00**	$ 1,200.00
925	1	Allow.	Street-Cut Permits	**$ 175.00**	$ 175.00	**$ 375.00**	$ 375.00
930	1	EA	Project Signs	**$ 675.00**	$ 675.00	**$ 450.00**	$ 450.00
935	10	HR	Archeological Required Delay (after 2 hrs.)	**$ 250.00**	$ 2,500.00	**$ 185.00**	$ 1,850.00
940	1	LS	Archeological Required Mob/Demob	**$ 725.00**	$ 725.00	**$ 700.00**	$ 700.00
EMERGENCY REPAIR					$ -		$ -
9000	175	HR	Supervisor's Truck with tools	**$ 35.00**	$ 6,125.00	**$ 30.00**	$ 5,250.00
9100	80	HR	Backhoe/Skid Steer	**$ 57.00**	$ 4,560.00	**$ 58.00**	$ 4,640.00
9200	8	HR	Compressor with tools	**$ 54.00**	$ 432.00	**$ 35.00**	$ 280.00
9300	16	HR	Dump Truck	**$ 65.00**	$ 1,040.00	**$ 60.00**	$ 960.00
9400	4	HR	Pump	**$ 25.00**	$ 100.00	**$ 15.00**	$ 60.00
9500	300	HR	Laborer	**$ 42.50**	$ 12,750.00	**$ 43.00**	$ 12,900.00
9600	200	HR	Pipe Fitter	**$ 44.50**	$ 8,900.00	**$ 45.00**	$ 9,000.00
9700	200	HR	Equipment Operator	**$ 57.50**	$ 11,500.00	**$ 58.00**	$ 11,600.00
9800	175	HR	Foreman	**$ 59.50**	$ 10,412.50	**$ 60.00**	$ 10,500.00
9900	$5,000	%	Rental Items Mark-Up Over Invoice (multiply $5,000 x your % for Item Price)	**$ 1,000.00**	$ 1,000.00	**$ 900.00**	$ 900.00
9950	$20,000	%	Materials Mark-Up Over Invoice (multiply $20,000 x your 5 for Item Price)	**$ 3,600.00**	$ 3,600.00	**$ 1,500.00**	$ 1,500.00

Signature: Michael Moya
Michael Moya (Aug 18, 2021 07:37 MDT)

Email: mrmoya@ci.santa-fe.nm.us

City of Santa Fe

Real Estate Summary of Contracts, Agreements, Amendments & Leases

Section to be completed by department

1. Munis Contract # 3202929

Contractor: Sub Surface Contracting

Description: CIP# 3058 Priority Line Replacement

Contract ○ Agreement ◉ Lease / Rent ○ Amendment ○

Term Start Date: as approved Term End Date: 6/30/25

☑ Approved by Council Date: Pending

Contract / Lease: Contract $2,250,000

Amendment # _____ to the Original Contract / Lease # _____

Increase/(Decrease) Amount $ _____

Extend Termination Date to: _____

☐ Approved by Council Date: _____

Amendment is for:

2. **HISTORY** of Contract, Amendments & Lease / Rent - Please Elaborate (option: attach spreadsheet if multiple amendments)

3. **Procurement History:** 21/43/B

Fran Dunaway (Aug 23, 2021 12:29 MDT) Aug 23, 2021

Purchasing Officer Review: Date:

Comment & Exceptions: Issuance of award from ITB 21/43/B. 1st. year.

4. **Funding Source:** Water Enterprise Fund CIP **Org / Object:** 5050395.572970

Andy Hopkins (Aug 23, 2021 11:13 MDT) Aug 23, 2021

Budget Officer Approval: Date:

Comment & Exceptions: _____

Staff Contact who completed this form: Maya Martinez Phone # 4271

Email: mfmartinez@santafenm.gov

To be recorded by City Clerk:

Clerk # _____

Date of Execution: _____

SUBSURF-01 DONISCHUK

CERTIFICATE OF LIABILITY INSURANCE

DATE (MM/DD/YYYY) 5/20/2021

THIS CERTIFICATE IS ISSUED AS A MATTER OF INFORMATION ONLY AND CONFERS NO RIGHTS UPON THE CERTIFICATE HOLDER. THIS CERTIFICATE DOES NOT AFFIRMATIVELY OR NEGATIVELY AMEND, EXTEND OR ALTER THE COVERAGE AFFORDED BY THE POLICIES BELOW. THIS CERTIFICATE OF INSURANCE DOES NOT CONSTITUTE A CONTRACT BETWEEN THE ISSUING INSURER(S), AUTHORIZED REPRESENTATIVE OR PRODUCER, AND THE CERTIFICATE HOLDER.

IMPORTANT: If the certificate holder is an ADDITIONAL INSURED, the policy(ies) must have ADDITIONAL INSURED provisions or be endorsed. If SUBROGATION IS WAIVED, subject to the terms and conditions of the policy, certain policies may require an endorsement. A statement on this certificate does not confer rights to the certificate holder in lieu of such endorsement(s).

PRODUCER License # 0757776 HUB International Insurance Services (SOW) 2905 Rodeo Park Drive East Building 6, Suite 100 Santa Fe, NM 87505	CONTACT NAME: Michelle Vialpando PHONE (A/C, No, Ext): (505) 992-1873 FAX (A/C, No): (866) 621-0427 E-MAIL ADDRESS: michelle.vialpando@hubinternational.com
	INSURER(S) AFFORDING COVERAGE — NAIC #
	INSURER A : ACUITY, A Mutual Insurance Company — 14184
INSURED Sub Surface Contracting Inc 27A Paseo De River St Santa Fe, NM 87507	INSURER B : Builders Trust of New Mexico INSURER C : INSURER D : INSURER E : INSURER F :

COVERAGES **CERTIFICATE NUMBER:** **REVISION NUMBER:**

THIS IS TO CERTIFY THAT THE POLICIES OF INSURANCE LISTED BELOW HAVE BEEN ISSUED TO THE INSURED NAMED ABOVE FOR THE POLICY PERIOD INDICATED. NOTWITHSTANDING ANY REQUIREMENT, TERM OR CONDITION OF ANY CONTRACT OR OTHER DOCUMENT WITH RESPECT TO WHICH THIS CERTIFICATE MAY BE ISSUED OR MAY PERTAIN, THE INSURANCE AFFORDED BY THE POLICIES DESCRIBED HEREIN IS SUBJECT TO ALL THE TERMS, EXCLUSIONS AND CONDITIONS OF SUCH POLICIES. LIMITS SHOWN MAY HAVE BEEN REDUCED BY PAID CLAIMS.

INSR LTR	TYPE OF INSURANCE	ADDL INSD	SUBR WVD	POLICY NUMBER	POLICY EFF (MM/DD/YYYY)	POLICY EXP (MM/DD/YYYY)	LIMITS	
A	X COMMERCIAL GENERAL LIABILITY CLAIMS-MADE X OCCUR X PD Ded: $500 GEN'L AGGREGATE LIMIT APPLIES PER: POLICY X PRO-JECT LOC OTHER:			Z75944	7/1/2020	7/1/2021	EACH OCCURRENCE DAMAGE TO RENTED PREMISES (Ea occurrence) MED EXP (Any one person) PERSONAL & ADV INJURY GENERAL AGGREGATE PRODUCTS - COMP/OP AGG 	$ 1,000,000 $ 250,000 $ 10,000 $ 1,000,000 $ 3,000,000 $ 3,000,000 $
A	AUTOMOBILE LIABILITY X ANY AUTO OWNED AUTOS ONLY SCHEDULED AUTOS X HIRED AUTOS ONLY X NON-OWNED AUTOS ONLY			Z75944	7/1/2020	7/1/2021	COMBINED SINGLE LIMIT (Ea accident) BODILY INJURY (Per person) BODILY INJURY (Per accident) PROPERTY DAMAGE (Per accident) 	$ 1,000,000 $ $ $ $
A	UMBRELLA LIAB X OCCUR X EXCESS LIAB CLAIMS-MADE DED X RETENTION $ 0			Z75944	7/1/2020	7/1/2021	EACH OCCURRENCE AGGREGATE 	$ 2,000,000 $ 2,000,000 $
B	WORKERS COMPENSATION AND EMPLOYERS' LIABILITY ANY PROPRIETOR/PARTNER/EXECUTIVE OFFICER/MEMBER EXCLUDED? (Mandatory in NH) Y / N: Y If yes, describe under DESCRIPTION OF OPERATIONS below	N / A		0692	1/1/2021	1/1/2022	X PER STATUTE OTH-ER E.L. EACH ACCIDENT E.L. DISEASE - EA EMPLOYEE E.L. DISEASE - POLICY LIMIT	$ 2,000,000 $ 2,000,000 $ 2,000,000
A	Leased/Rented Eqpt			Z75944	7/1/2020	7/1/2021	Ded: $500 / Limit	200,000

DESCRIPTION OF OPERATIONS / LOCATIONS / VEHICLES (ACORD 101, Additional Remarks Schedule, may be attached if more space is required)

CERTIFICATE HOLDER

City of Santa Fe
Public Utilities Department
801 West San Mateo
Santa Fe, NM 87505

CANCELLATION

SHOULD ANY OF THE ABOVE DESCRIBED POLICIES BE CANCELLED BEFORE THE EXPIRATION DATE THEREOF, NOTICE WILL BE DELIVERED IN ACCORDANCE WITH THE POLICY PROVISIONS.

AUTHORIZED REPRESENTATIVE

© 1988-2015 ACORD CORPORATION. All rights reserved.
The ACORD name and logo are registered marks of ACORD

SUBSURF-01 DONISCHUK

CERTIFICATE OF LIABILITY INSURANCE

DATE (MM/DD/YYYY) 5/20/2021

THIS CERTIFICATE IS ISSUED AS A MATTER OF INFORMATION ONLY AND CONFERS NO RIGHTS UPON THE CERTIFICATE HOLDER. THIS CERTIFICATE DOES NOT AFFIRMATIVELY OR NEGATIVELY AMEND, EXTEND OR ALTER THE COVERAGE AFFORDED BY THE POLICIES BELOW. THIS CERTIFICATE OF INSURANCE DOES NOT CONSTITUTE A CONTRACT BETWEEN THE ISSUING INSURER(S), AUTHORIZED REPRESENTATIVE OR PRODUCER, AND THE CERTIFICATE HOLDER.

IMPORTANT: If the certificate holder is an ADDITIONAL INSURED, the policy(ies) must have ADDITIONAL INSURED provisions or be endorsed. If SUBROGATION IS WAIVED, subject to the terms and conditions of the policy, certain policies may require an endorsement. A statement on this certificate does not confer rights to the certificate holder in lieu of such endorsement(s).

PRODUCER License # 0757776 HUB International Insurance Services (SOW) 2905 Rodeo Park Drive East Building 6, Suite 100 Santa Fe, NM 87505	CONTACT NAME: Michelle Vialpando PHONE (A/C, No, Ext): (505) 992-1873 FAX (A/C, No): (866) 621-0427 E-MAIL ADDRESS: michelle.vialpando@hubinternational.com
INSURED Sub Surface Contracting Inc 27A Paseo De River St Santa Fe, NM 87507	INSURER(S) AFFORDING COVERAGE — NAIC # INSURER A : ACUITY, A Mutual Insurance Company — 14184 INSURER B : Builders Trust of New Mexico INSURER C : INSURER D : INSURER E : INSURER F :

COVERAGES **CERTIFICATE NUMBER:** **REVISION NUMBER:**

THIS IS TO CERTIFY THAT THE POLICIES OF INSURANCE LISTED BELOW HAVE BEEN ISSUED TO THE INSURED NAMED ABOVE FOR THE POLICY PERIOD INDICATED. NOTWITHSTANDING ANY REQUIREMENT, TERM OR CONDITION OF ANY CONTRACT OR OTHER DOCUMENT WITH RESPECT TO WHICH THIS CERTIFICATE MAY BE ISSUED OR MAY PERTAIN, THE INSURANCE AFFORDED BY THE POLICIES DESCRIBED HEREIN IS SUBJECT TO ALL THE TERMS, EXCLUSIONS AND CONDITIONS OF SUCH POLICIES. LIMITS SHOWN MAY HAVE BEEN REDUCED BY PAID CLAIMS.

INSR LTR	TYPE OF INSURANCE	ADDL INSD	SUBR WVD	POLICY NUMBER	POLICY EFF (MM/DD/YYYY)	POLICY EXP (MM/DD/YYYY)	LIMITS	
A	X COMMERCIAL GENERAL LIABILITY CLAIMS-MADE X OCCUR X PD Ded: $500 GEN'L AGGREGATE LIMIT APPLIES PER: POLICY X PRO-JECT LOC OTHER:			Z75944	7/1/2021	7/1/2022	EACH OCCURRENCE DAMAGE TO RENTED PREMISES (Ea occurrence) MED EXP (Any one person) PERSONAL & ADV INJURY GENERAL AGGREGATE PRODUCTS - COMP/OP AGG 	$ 1,000,000 $ 250,000 $ 10,000 $ 1,000,000 $ 3,000,000 $ 3,000,000 $
A	AUTOMOBILE LIABILITY X ANY AUTO OWNED AUTOS ONLY SCHEDULED AUTOS X HIRED AUTOS ONLY X NON-OWNED AUTOS ONLY			Z75944	7/1/2021	7/1/2022	COMBINED SINGLE LIMIT (Ea accident) BODILY INJURY (Per person) BODILY INJURY (Per accident) PROPERTY DAMAGE (Per accident) 	$ 1,000,000 $ $ $ $
A	UMBRELLA LIAB X OCCUR X EXCESS LIAB CLAIMS-MADE DED X RETENTION $ 0			Z75944	7/1/2021	7/1/2022	EACH OCCURRENCE AGGREGATE 	$ 2,000,000 $ 2,000,000 $
B	WORKERS COMPENSATION AND EMPLOYERS' LIABILITY ANY PROPRIETOR/PARTNER/EXECUTIVE OFFICER/MEMBER EXCLUDED? (Mandatory in NH) Y/N: Y If yes, describe under DESCRIPTION OF OPERATIONS below	N / A		0692	1/1/2021	1/1/2022	X PER STATUTE OTH-ER E.L. EACH ACCIDENT E.L. DISEASE - EA EMPLOYEE E.L. DISEASE - POLICY LIMIT	 $ 2,000,000 $ 2,000,000 $ 2,000,000
A	Leased/Rented Eqpt			Z75944	7/1/2021	7/1/2022	Ded: $500 / Limit	200,000

DESCRIPTION OF OPERATIONS / LOCATIONS / VEHICLES (ACORD 101, Additional Remarks Schedule, may be attached if more space is required)

CERTIFICATE HOLDER

City of Santa Fe
Public Utilities Department
801 West San Mateo
Santa Fe, NM 87505

CANCELLATION

SHOULD ANY OF THE ABOVE DESCRIBED POLICIES BE CANCELLED BEFORE THE EXPIRATION DATE THEREOF, NOTICE WILL BE DELIVERED IN ACCORDANCE WITH THE POLICY PROVISIONS.

AUTHORIZED REPRESENTATIVE

© 1988-2015 ACORD CORPORATION. All rights reserved.
The ACORD name and logo are registered marks of ACORD

City of Santa Fe

Treasury Department
200 Lincoln Ave.
Santa Fe, New Mexico 87504-0909
505-955-6551

BUSINESS REGISTRATION

Business Name: SUB SURFACE CONTRACTING INC.
DBA: SUB SURFACE CONTRACTING INC.

Business Location: 27 PASEO DE RIVER A
SANTA FE , NM 87507

CRS Number: 02104256000

Owner: SUB SURFACE CONTRACTING INC.

License Number: 46991

License Type: Business License - Renewable

Issued Date: April 01, 2021

Classification: Contractor - Specialty

Expiration Date: April 01, 2022

Fees Paid: $35.00

SUB SURFACE CONTRACTING INC.
27 A PASEO DE RIVER
SANTA FE, NM 87507

THIS IS NOT A CONSTRUCTION PERMIT OR SIGN PERMIT. APPROPRIATE PERMITS MUST BE OBTAINED FROM THE CITY OF SANTA FE BUILDING PERMIT DIVISION PRIOR TO COMMENCEMENT OF ANY CONSTRUCTION OR THE INSTALLATION OF ANY EXTERIOR SIGN.

THIS REGISTRATION/LICENSE IS NOT TRANSFERRABLE TO OTHER BUSINESSES OR PREMISES.

TO BE POSTED IN A CONSPICUOUS PLACE

CITY OF SANTA FE PROCUREMENT CHECKLIST

Contractor Name: Sub Surface Contracting, Inc.

Procurement Title: 21/43/B Priority Line Replacement Price Agreement, CIP # 3058

Procurement Method: State Price Agreement ☐ *Cooperative* ☐ *Sole Source* ☐ *Other* ☐ _____

Exempt ☐ *Request For Proposal (*RFP) ☒ *Invitation To Bid (ITB)* ☐ *Contract under 60K* ☐ *Contract over 60K* ☐

Department Requesting Bill Huey Water Division, PUD

Procurement Requirements:
A procurement file shall be maintained for all contracts, regardless of the method of procurement. The procurement file shall contain the basis on which the award is made, all submitted bids, all evaluation materials, score sheets, quotations and all other documentation related to or prepared in conjunction with evaluation, negotiation, and the award process. The procurement shall contain a written determination from the Requesting Department, signed by the purchasing officer, setting forth the reasoning for the contract award decision before submitting to the Committees. .

REQUIRED DOCUMENTS FOR APPROVAL BY PURCHASING*

YES	N/A	
☒	☐	Approved Procurement Checklist (by Purchasing)
☒	☐	Memo addressed to City Manager (under 60K) Committees/City Council (over 60K)
☐	☒	State Price Agreement
☐	☒	RFP
☐	☒	Evaluation Committee Report
☒	☐	ITB
☒	☐	Bib Tab
☐	☒	Quotes (3 valid current quotes)
☐	☒	Cooperative Agreement
☐	☒	Sole Source Request and Determination Form
☐	☒	Contractors Exempt Letter
☒	☐	Purchasing Officers approval for exempt procurement
☐	☒	BAR
☐	☒	FIR
☒	☐	Executed Contract, Agreement or Amendment
☒	☐	Current Business Registration and CRS numbers on contract or agreement
☒	☐	Summary of Contracts and Agreements form
☐	☒	Certificate of Insurance
☐	☐	All documentation presented to Committees
☐	☐	Other: _____

Public Utilities Dept / Water Division/Bill Huey (Bill Huey)	Engineer	8/17/21
Department Rep Printed Name (attesting that all information included)	Title	Date
Fran Dunaway (Fran Dunaway, Aug 23, 2021 12:29 MDT)	Chief Procurement Officer	Aug 23, 2021
Purchasing Officer (attesting that all information is reviewed)	Title	Date

Include all other substantive documents and records of communication that pertain to the procurement and any resulting contract.

*

Item#_____
Munis Contract#3202929
Original Contract Item#_____
SWPA/GSA/Coop/RFP/ITB#: _____

CITY OF SANTA FE
AMENDMENT No. 2 TO
The Priority Line Replacement Price Agreement
ITEM#21-0484

This AMENDMENT No. 2 (the "Amendment") amends the CITY OF SANTA FE CONTRACT, dated September 10, 2021 (the "Contract"), between the City of Santa Fe (the "City") and Sub Surface Contracting, Inc. (the "Contractor"). The date of this Amendment shall be the date when it is executed by the City and the Contractor whichever occurs last.

RECITALS:

A. Under the terms of the Contract, Contractor has agreed to provide the Priority Line Replacement for the City of Santa Fe.

B. Pursuant to Article 14 of the Contract, and for good and valuable consideration, the receipt and sufficiency of which are acknowledged by the parties, the City and the Contractor agree as follows:

1. COMPENSATION.

Article 2, paragraph A of the Contract is amended to increase the amount of compensation by a total of $1,656,806.25 so that Article 2, paragraph A reads in its entirety as follows:

A. The City shall pay to the Contractor in full payment for services satisfactorily performed a total amount up to six million one hundred and ninety thousand dollars ($6,190,000.00). The New Mexico gross receipts tax levied on the amounts payable under this Agreement totaling five-hundred and six thousand, eight hundred and six dollars and twenty-five cents ($506,806.25) shall be paid by the City to the Contractor as described in Exhibit A

attached hereto. **The total amount payable to the Contractor under this Agreement, including gross receipts tax and expenses, shall not exceed six million, six hundred ninety-six thousand, eight hundred and six dollars and twenty-five cents ($6,696,806.25). This amount is a maximum and not a guarantee that the work assigned to be performed by the Contractor under this Agreement shall equal the amount stated herein. The parties do not intend for the Contractor to continue to provide services without compensation when the total compensation amount is reached. Contractor is responsible for notifying the City when the services provided under this Agreement reach the total compensation amount. In no event will the Contractor be paid for services provided in excess of the total compensation amount without this Agreement being amended in writing prior to those services in excess of the total compensation amount being provided.**

2. CONTRACT IN FULL FORCE.

Except as specifically provided in this Amendment, the Contract remains and shall remain in full force and effect, in accordance with its terms.

IN WITNESS WHEREOF, the parties have executed this Amendment No. 2 to the Contract as of the dates set forth below.

CITY OF SANTA FE:

_____
ALAN WEBER, MAYOR

DATE:_____

ATTEST:

CONTRACTOR:
Sub Surface Contracting, Inc.

Jeremey Sanderson
_____
JEREMEY SANDERSON,
SUPERINTENDENT/VICE PRESIDENT

DATE: Oct 29, 2024
CRS# 02104256000

Registration #46991

_____
CITY CLERK

CITY ATTORNEY'S OFFICE:

Marcos Martinez
Marcos Martinez (Oct 29, 2024 13:08 MDT)

_____
SENIOR ASSISTANT CITY ATTORNEY

APPROVED FOR FINANCES:

_____
FINANCE DIRECTOR

Signature:

Email:

GB Subsurface Contract Amendment 2 Munis Contract 3202929

Final Audit Report 2024-10-30

Created:	2024-10-30
By:	JAMES EDWARDS (jwedwards@santafenm.gov)
Status:	Canceled / Declined
Transaction ID:	CBJCHBCAABAAPkxY8rw6KFBodA1TUNO7hWQ4voA2ZUUd

"GB Subsurface Contract Amendment 2 Munis Contract 3202929" History

Document created by JAMES EDWARDS (jwedwards@santafenm.gov)
2024-10-30 - 7:26:21 PM GMT- IP address: 63.232.20.2

Document emailed to ajhopkins@santafenm.gov ajhopkins@santafenm.gov (ajhopkins@santafenm.gov) for signature
2024-10-30 - 7:33:29 PM GMT

Email viewed by ajhopkins@santafenm.gov ajhopkins@santafenm.gov (ajhopkins@santafenm.gov)
2024-10-30 - 7:40:14 PM GMT- IP address: 104.47.64.254

Document declined by ajhopkins@santafenm.gov ajhopkins@santafenm.gov (ajhopkins@santafenm.gov)
Decline reason: BAR requires Dept Director signature before it comes to Budget.
2024-10-30 - 7:41:49 PM GMT- IP address: 63.232.20.2

Powered by Adobe Acrobat Sign

GB Subsurface Contract Amendment 2 Munis Contract 3202929 (1)

Interim Agreement Report 2024-11-01

Created:	2024-10-31
By:	JAMES EDWARDS (jwedwards@santafenm.gov)
Status:	Out for Signature
Transaction ID:	CBJCHBCAABAAkXZt4nvM9wef6e3NIFPFul_ztw02Ppxo

Agreement History

Agreement history is the list of the events that have impacted the status of the agreement prior to the final signature. A final audit report will be generated when the agreement is complete.

"GB Subsurface Contract Amendment 2 Munis Contract 3202929 (1)" History

Document created by JAMES EDWARDS (jwedwards@santafenm.gov)
2024-10-31 - 9:01:41 PM GMT- IP address: 75.233.144.205

Document emailed to Jesse Roach (jdroach@santafenm.gov) for signature
2024-10-31 - 9:09:28 PM GMT

Email viewed by Jesse Roach (jdroach@santafenm.gov)
2024-10-31 - 9:21:50 PM GMT- IP address: 104.47.64.254

Document e-signed by Jesse Roach (jdroach@santafenm.gov)
Signature Date: 2024-10-31 - 9:22:47 PM GMT - Time Source: server- IP address: 63.232.20.2

Document emailed to John Dupuis (jedupuis@santafenm.gov) for signature
2024-10-31 - 9:22:55 PM GMT

Document e-signed by John Dupuis (jedupuis@santafenm.gov)
Signature Date: 2024-10-31 - 9:26:06 PM GMT - Time Source: server- IP address: 174.218.18.173

Document emailed to ajhopkins@santafenm.gov ajhopkins@santafenm.gov (ajhopkins@santafenm.gov) for signature
2024-10-31 - 9:26:13 PM GMT

Email viewed by ajhopkins@santafenm.gov ajhopkins@santafenm.gov (ajhopkins@santafenm.gov)
2024-10-31 - 11:22:29 PM GMT- IP address: 104.47.64.254

Document e-signed by ajhopkins@santafenm.gov ajhopkins@santafenm.gov (ajhopkins@santafenm.gov)

Signature Date: 2024-10-31 - 11:23:04 PM GMT - Time Source: server- IP address: 63.232.20.2

Document sent to JoAnn Lovato (jdlovato@santafenm.gov) and Travis Dutton-Leyda (tkduttonleyda@santafenm.gov) for signature. One of them to sign

2024-10-31 - 11:23:11 PM GMT

Email viewed by Travis Dutton-Leyda (tkduttonleyda@santafenm.gov)

2024-11-01 - 5:53:25 AM GMT- IP address: 104.28.48.217

Email viewed by JoAnn Lovato (jdlovato@santafenm.gov)

2024-11-01 - 4:13:37 PM GMT- IP address: 63.232.20.2

City of Santa Fe, New Mexico

memo

Date: October 29, 2024

To: Public Works and Utilities Committee / Finance Committee / City Council

Via: John Dupuis, Public Utilities Department Director JD
Jesse D. Roach, Water Division Director JR

From: Bill Huey, Water Division Engineer BH

Subject: Request for Approval of Amendment No. 2 to Price Agreement #21-0378 with Sub Surface Contracting, Inc. to Increase Maximum Compensation by $542,187.50 for a New Total Contract Amount of $1,626,562.50 including NMGRT. (Bill Huey, Engineer, bchuey@santafenm.gov).

Vendor Name: Sub Surface Contracting, Inc.

Vendor Number: 1921

Contract Number: 3202777

ITEM AND ISSUE:

The Public Utilities Department Water Division requests approval of Amendment No. 2 to Price Agreement #21-0378 with Sub Surface Contracting, Inc. (Sub Surface) to Increase Maximum Compensation by $542,187.50 for a New Total Contract Amount of $1,626,562.50 including New Mexico Gross Receipt Tax (NMGRT) with No Corresponding Change to the Term of the Agreement. (Bill Huey, Engineer, bchuey@santafenm.gov).

ACTION REQUESTED:

Approval of Amendment No. 2 to Price Agreement #21-0378

BACKGROUND AND SUMMARY:

The City Wide Water Utility Construction Contract is a multi-contractor on-call requirements contract, with the Water Division issuing work orders as needed for work such as water line replacements, and emergency repairs. In July 2021, the Governing Body approved ITB No. '21/37/B for $250,000.00 plus NMGRT per year for each of the two contractors, Sub Surface and A.A.C. Construction LLC. Due to Supply Chain delays, $467,000.00 in orders from Sub Surface on the previous contract were delayed until after this contract was in effect and were paid under this contract. Current contract possible funding is limited to $29,713.52 without approval of Amendment #3.

This is a multi-contractor award ITB to set the applicable Bid Items for future work. Future work will be assigned under fully signed Work Orders for planned work on will be followed with a signed Work Order

for Emergency repair. The exact type of work required will be used to select from the applicable Bid Items.

PROCUREMENT METHOD:

ITB No. '21/37/B FY 21/22 City Wide Water Utility Construction & Repair Price Agreement, CIP # 3057 approved by City Council on 7/28/2021.

Chief Procurement Officer Approval: _____ **Date:** Nov 12, 2024
Comment/Exceptions: _____

Supporting Information:

CONTRACT NUMBER:
The FY25 Munis contract number is 3202777
The FY25 Project ledger number for City Wide Construction is WTR2550504
$$$$$ SOURCE/REVENUE: ☒Expense ☐Revenue

The funding source is:
Fund Name/Number: Water Enterprise Fund 505
Munis Org Name/Number: Water CIP/5050395
Munis Object Name/Number: WIP Construction/572970

If the project is grant funded? List grant award number: _____

Grant Manager / Accounting Officer Approval: _____ **Date:** _____
Comment/Exceptions: _____

Project Ledger #: _____

Budget Officer Approval: ALEXIS LOTERO (Nov 12, 2024 10:42 MST) **Date:** Nov 12, 2024
Comment/Exceptions: _____

CAPITAL ASSET (will this procurement result in a tangible item that costs more than $5,000?):

☒Yes | ☐ No

 # (if known): _____

Repair or Replacement of Existing Equipment:

☒Yes | ☐ No
If yes -> ☒Repair | ☒ Replacement

Please explain: Contract is used for water line main break emergency repairs and replacements.

Capital Project:
(New and improvement projects that are going to cost $10,000 or more)
☒ Yes | ☐ No

Project Ledger #: _____

Anticipated length of project: To be determined

Asset Manager Approval: Lisa Storey (Nov 12, 2024 10:53 MST) **Date:** Nov 12, 2024
Comment/Exceptions: Nov 12, 2024

Department Approvals:
IT Components: ☐ **Yes |** ☒ **No**
Vehicles: ☐ **Yes |** ☒ **No**
Facilities, Furniture, Fixtures, Equipment: ☐ **Yes |** ☒ **No**

Approval: _____ **Title:** _____ **Date**: _____
Approval: _____ **Title:** _____ **Date**: _____
Comment & Exceptions: _____

Department Contract Administrator Contact Info:

Gina Wolff
vawolff@santafenm.gov
505-955-4271

ATTACHMENTS:

Amendment No. 2
Budget Amendment Request (BAR)

cc:

Item#_____
Munis Contract# 3202777
Original Contract Item#_21-0378
CIP # 3057

CITY OF SANTA FE
AMENDMENT No.2
TO
PRICE AGREEMENT# 21-0378

This AMENDMENT No. 2 (the "Amendment") amends the CITY OF SANTA FE PRICE AGREEMENT, dated July 28, 2021 (the "Agreement"), between the City of Santa Fe (the "City") and Sub Surface Contracting, Inc. (the "Contractor"). The date of this Amendment shall be the date when it is executed by the City and the Contractor whichever occurs last.

RECITALS

A. Under the terms of the Agreement, Contractor has agreed to provide On-Call Construction Services for City Wide Utility Construction & Repair for the City of Santa Fe.

B. Pursuant to Article 14 of the Agreement, and for good and valuable consideration, the receipt and sufficiency of which are acknowledged by the parties, the City and the Contractor agree as follows:

1. COMPENSATION.

Article 2, paragraph A of the Agreement is amended to add five hundred forty-two thousand one hundred eighty-seven dollars and fifty cents ($542,187.50), inclusive of New Mexico Gross Receipts Tax (NMGRT), so that Article 2, paragraph A reads in its entirety as follows:

> The City shall pay to the Contractor in full payment for services satisfactorily performed BASED UPON THE ATTACHED PRICE SHEETS, such compensation not to exceed one million dollars ($1,626,563.50) including NMGRT for a total of four (4) years. **The total amount payable to the Contractor under this Agreement, including gross receipts tax and expenses, shall not exceed one million six hundred twenty-six thousand five hundred and sixty-three dollars and fifty**

cents ($1,626,563.50). This amount is a maximum and not a guarantee that the **work** assigned to be performed by Contractor under this Agreement shall equal the amount stated herein. The parties do not intend for the Contractor to continue to provide services without compensation when the total compensation amount is reached. Contractor is responsible for notifying the City when the services provided under this Agreement reach the total compensation amount. In no event will the Contractor be paid for services provided in excess of the total compensation amount without this Agreement being amended in writing prior to those services in excess of the total compensation amount being provided.

2. AGREEMENT IN FULL FORCE.

Except as specifically provided in this Amendment, the Agreement remains and shall remain in full force and effect, in accordance with its terms.

IN WITNESS WHEREOF, the parties have executed this Amendment No. 2 to the Contract as of the dates set forth below.

CITY OF SANTA FE:

_____
ALAN WEBBER, MAYOR

Date: _____

ATTEST:

_____
CITY CLERK

CONTRACTOR:
SUB SURFACE CONTRACTING, INC.

_____
JEREMY SANDERSON, VICE PRESIDENT
Date: 11/8/24

CRS # 02104256000

CITY ATTORNEY'S OFFICE:

Marcos Martinez
Marcos Martinez (Nov 8, 2024 13:10 MST)
SENIOR ASSISTANT CITY ATTORNEY

APPROVED FOR FINANCES:

Emily K. Oster
EMILY OSTER, FINANCE DIRECTOR

	Sub Surface		
Bid Item	**Article and Description**	**Unit**	**Unit Price**
Construction Items			
5	2" PVC Water Main, cip, all lengths	LF	$ 30.00
10	4" PVC Water Main, cip, <100'	LF	$ 36.00
15	4" PVC Water Main, cip, >100'	LF	$ 34.00
20	6" PVC Water Main, cip, <100'	LF	$ 42.00
25	6" PVC Water Main, cip, >100'	LF	$ 39.00
30	8" PVC Water Main, cip, <100'	LF	$ 48.00
35	8" PVC Water Main, cip, >100'	LF	$ 45.50
40	10" PVC Water Main, cip, <100'	LF	$ 52.00
45	10" PVC Water Main, cip, >100'	LF	$ 49.00
50	12" PVC Water Main, cip, <100'	LF	$ 66.75
55	12" PVC Water Main, cip, >100'	LF	$ 64.50
60	14" PVC Water Main, cip	LF	$ 79.00
65	16" PVC Water Main, cip	LF	$ 97.00
70	24" PVC Water Main, cip	LF	$ 100.00
75	2" DI Water Main, cip, all lengths	LF	$ -
80	4" DI Water Main, cip, <100'	LF	$ 57.50
85	4" DI Water Main, cip, >100'	LF	$ 56.00
90	6" DI Water Main, cip, <100'	LF	$ 53.00
95	6" DI Water Main, cip, >100'	LF	$ 51.00
100	8" DI Water Main, cip, <100'	LF	$ 60.25
105	8" DI Water Main, cip, >100'	LF	$ 58.00
110	10" DI Water Main, cip, <100'	LF	$ 65.00
115	10" DI Water Main, cip, >100'	LF	$ 63.00
120	12" DI Water Main, cip, <100'	LF	$ 78.00
125	12" DI Water Main, cip, >100'	LF	$ 74.00
130	14" DI Water Main, cip	LF	$ 87.00
135	16" DI Water Main, cip	LF	$ 101.00
140	24" DI Water Main, cip	LF	$ 159.00
145	Extra Pay for Trench Depth, 6'-8'	LF	$ 8.00
150	Extra Pay for Trench Depth, 8'-10'	LF	$ 12.00
155	Extra Pay for Trench Depth, 10'-14'	LF	$ 30.00
160	Rock Excavation	CY	$ 220.00
165	Exploratory Excavation (as SDCW Approved)	CY	$ 65.00
170	Imported Backfill (as SDCW Approved)	CY	$ 24.00
175	Fitting Installation	LB	$ 4.00
180	Fitting Insertion	LB	$ 34.00
185	4" Retainer Ring/ Bolt on Flange	EA	$ 75.00
190	6" Retainer Ring/ Bolt on Flange	EA	$ 105.00
195	8" Retainer Ring/ Bolt on Flange	EA	$ 119.00
200	10" Retainer Ring/ Bolt on Flange	EA	$ 121.00
205	12" Retainer Ring/ Bolt on Flange	EA	$ 145.00
210	14" Retainer Ring/ Bolt on Flange	EA	$ 179.00
215	16" Retainer Ring/ Bolt on Flange	EA	$ 285.00
220	4"Joint Harness	EA	$ 96.00
225	6" Joint Harness	EA	$ 130.00
230	8" Joint Harness	EA	$ 155.00

235	10" Joint Harness	EA	$ 160.00
240	12" Joint Harness	EA	$ 200.00
245	14" Joint Harness	EA	$ 375.00
250	16" Joint Harness	EA	$ 455.00
255	Concrete Thrust Blocking (as SDCW Approved)	CY	$ 355.00
260	Tapping Sleeve w/ Tap, 4" X 4"	EA	$ 1,400.00
265	Tapping Sleeve w/ Tap, 6" X 4" - 6"	EA	$ 1,600.00
270	Tapping Sleeve w/ Tap, 8" X 4" - 8"	EA	$ 1,800.00
275	Tapping Sleeve w/ Tap, 10" X 4" - 10"	EA	$ 2,100.00
280	Tapping Sleeve w/ Tap, 12" X 4" - 12"	EA	$ 2,300.00
285	Tapping Sleeve w/Tap, 20" X 4" - 20"	EA	$ 4,200.00
290	Non-Pressurized Connections, 2" line	EA	$ 2,500.00
295	Non-Pressurized Connections, 4"-10" line	EA	$ 3,675.00
300	Non-Pressurized Connections, 12"-20" line	EA	$ 4,100.00
305	2" CL125 Gate Valves, cip.	EA	$ 975.00
310	4" CL125 Gate Valves, cip.	EA	$ 1,050.00
315	6" CL125 Gate Valves, cip.	EA	$ 1,300.00
320	8" CL125 Gate Valves, cip.	EA	$ 1,825.00
325	10" CL125 Gate Valves, cip.	EA	$ 2,335.00
330	12" CL125 Gate Valves, cip.	EA	$ 2,800.00
335	2" CL250 Gate Valves, cip.	EA	$ 945.00
340	4" CL250 Gate Valves, cip.	EA	$ 1,925.00
345	6" CL250 Gate Valves, cip.	EA	$ 2,050.00
350	8" CL250 Gate Valves, cip.	EA	$ 2,950.00
355	10" CL250 Gate Valves, cip.	EA	$ 4,200.00
360	12" CL250 Gate Valves, cip.	EA	$ 4,625.00
365	16" CL250 Gate Valves, cip.	EA	$ 7,100.00
370	20" CL250 Gate Valves, cip.	EA	$ 16,190.00
375	24" CL250 Gate Valves, cip.	EA	$ 23,250.00
380	12" CL250 Butterfly Valves, cip.	EA	$ 2,800.00
385	16" CL250 Butterfly Valves, cip.	EA	$ 4,850.00
390	20" CL250 Butterfly Valves, cip.	EA	$ 6,700.00
395	24" CL250 Butterfly Valves, cip.	EA	$ 9,325.00
400	Fire Hydrant, 5' or less bury, cip.	EA	$ 3,125.00
405	Fire Hydrant Extension, 6" or 12" length	EA	$ 840.00
410	Fire Hydrant Extension, 18" or 24" length	EA	$ 1,225.00
415	Fire Hydrant Remove & Relay	EA	$ 800.00
420	Fire Hydrant Remove & Return	EA	$ 575.00
425	2 1/4" Flush Hydrant	EA	$ 1,565.00
430	2" Blow-Off Valve Installation	EA	$ 1,340.00
435	2" Pressure Relief Valve, cip.	EA	$ 6,830.00
440	3" Pressure Relief Valve, cip.	EA	$ 7,075.00
445	4" Pressure Relief Valve, cip.	EA	$ 8,195.00
450	6" Pressure Relief Valve, cip.	EA	$ 10,950.00
455	8" Pressure Relief Valve, cip.	EA	$ 15,525.00
460	12" Pressure Relief Valve, cip.	EA	$ 29,725.00
465	Air & Vacuum Release Valve, 1"	EA	$ 2,950.00
470	Air & Vacuum Release Valve, 2"	EA	$ 4,140.00
475	Install City of Santa Fe Furnished Valve/Meter, 2" - 4"	EA	$ 450.00
480	Install City of Santa Fe Furnished Valve/Meter, 6" - 8"	EA	$ 550.00

485	Install City of Santa Fe Furnished Valve/Meter, 10"-12"	EA	$ 750.00
490	Metered 2” Bypass – Vault Installation	EA	$ 3,185.00
495	Valve Box, cip.	EA	$ 825.00
500	Valve Box Replacement	EA	$ 975.00
505	Valve Box Removal of Existing	EA	$ 450.00
510	Valve Box Adjustment	EA	$ 625.00
515	Valve Stem Extension, 0’-4’ Depth	EA	$ 250.00
520	Precast 4' Diameter Pit w/ Lid Min. 4' Depth	VF	$ 4,000.00
525	Precast 6' Diameter Pit w/ Lid Min. 4' Depth	VF	$ 5,150.00
530	Precast 8' Diameter Pit w/ Lid Min. 4' Depth	VF	$ 6,200.00
535	Cast-In-Place RCP Vault w/ Lid	CY	$ 12,500.00
540	Prefabricated Vault, 4' X 8'	EA	$ 8,995.00
545	Native Seeding	ACRE	$ 2,275.00
550	Bollards (pair)	EA	$ 1,200.00
555	4" Steel Casing	LF	$ 95.00
560	4" PVC Casing	LF	$ 85.00
565	14" Steel Casing	LF	$ 225.00
570	16" Steel Casing	LF	$ 240.00
575	18" Steel Casing	LF	$ 275.00
580	22" Steel Casing	LF	$ 330.00
585	26" Steel Casing	LF	$ 400.00
590	28" Steel Casing	LF	$ 475.00
595	30" Steel Casing	LF	$ 425.00
600	36" Steel Casing	LF	$ 460.00
605	Bore & Jack Casing Pipe	DIA-IN- LF	$ 28.00
610	Open Cut Casing Pipe Installation, < 6' Deep	LF	$ 39.00
615	Asphalt Pavement Removal & Disposal, <2”	SY	$ 65.00
620	Asphalt Pavement Removal & Disposal, 2”-6”	SY	$ 65.00
625	Concrete Pavement Removal & Disposal, <2”	SY	$ 95.00
630	Concrete Pavement Removal & Disposal, 2”-6”	SY	$ 110.00
635	Concrete Curb and Gutter Removal & Disposal	LF	$ 29.00
640	Concrete Sidewalk Removal & Disposal	SY	$ 30.00
645	Replace City Street Pavement w/o Laydown Machine, Virgin Asphalt	SY	$ 75.00
650	Replace City Street Pavement w/o Laydown Machine, Recycled Asphalt	SY	$ 75.00
655	Replace City Street Pavement with Laydown Machine, Virgin Asphalt	SY	$ 265.00
660	Replace City Street Pavement with Laydown Machine, Recycled Asphalt	SY	$ 265.00
665	Replace City Street Pavement with Temporary Cold Mix	SY	$ 105.00
670	Replace Non-City Street Pavement w/o Laydown Machine, Virgin Asphalt	SY	$ 75.00
675	Replace Non-City Street Pavement w/o Laydown Machine, Recycled Asphalt	SY	$ 75.00
680	Replace Non-City Street Pavement with Laydown Machine, Virgin Asphalt	SY	$ 265.00
685	Replace Non-City Street Pavement with Laydown Machine, Recycled Asphalt	SY	$ 265.00
690	Replace Non-City Street Pavement with Temporary Cold Mix	SY	$ 105.00

695	Replace Concrete Pavement	SY	$ 290.00
700	Replace Concrete Curb & Gutter	LF	$ 45.00
705	Replace Concrete Sidewalk	SY	$ 190.00
710	Replace Gravel Surface, 0”-2”	CY	$ 55.00
715	Replace Gravel Surface, 2”-4”	CY	$ 65.00
720	Base course/Gravel (crushed or landscape), 0’-3”	SY	$ 35.00
725	Base course/Gravel (crushed or landscape), 3”-6”	SY	$ 45.00
730	Service, 3/4" Single, New Main	EA	$ 1,650.00
735	Service, 3/4" Double, New Main	EA	$ 1,975.00
740	Service, 1", New Main	EA	$ 1,825.00
745	Service, 1 1/2", New Main	EA	$ 3,590.00
750	Service, 2", New Main	EA	$ 3,970.00
755	Service, 3/4" Single, Existing Main	EA	$ 1,650.00
760	Service, 3/4" Double, Existing Main	EA	$ 1,975.00
765	Service, 1", Existing Main	EA	$ 1,825.00
770	Service, 1 1/2", Existing Main	EA	$ 3,590.00
775	Service, 2", Existing Main	EA	$ 3,950.00
780	Service Replacement, 3/4"	EA	$ 1,850.00
785	Service Replacement, Double, 3/4"	EA	$ 2,100.00
790	Service Replacement, 1”	EA	$ 1,950.00
795	Service Replacement, 1 1/2"	EA	$ 3,750.00
800	Service Replacement, 2”	EA	$ 4,125.00
805	Meter Box Relocation/Replacement, 3/4"	EA	$ 1,200.00
810	Meter Box Relocation/Replacement, 1”	EA	$ 1,400.00
815	Meter Box Relocation/Replacement, 1-1/2"	EA	$ 1,600.00
820	Meter Box Relocation/Replacement, 2”	EA	$ 1,600.00
825	Service Transfer, 3/4"	EA	$ 625.00
830	Service Transfer, 1”	EA	$ 725.00
835	Service Transfer, 1 1/2"	EA	$ 825.00
840	Service Transfer at Main, 2”	EA	$ 850.00
845	Retire Existing Service at Main, 3/4"- 2"	EA	$ 725.00
850	Retire Existing Meter Box & Setting	EA	$ 525.00
855	Adjust Meter Box To Grade	EA	$ 450.00
860	Service Saddle, 3/4" Tap, 4"-12" Main	EA	$ 650.00
865	Service Saddle, 1" Tap, 4"-12" Main	EA	$ 775.00
870	Service Saddle, 1 1/2" Tap, 4"-12" Main	EA	$ 950.00
875	Service Saddle, 2" Tap, 4"-12" Main	EA	$ 1,075.00
880	Service Tubing, 3/4"	LF	$ 33.50
885	Service Tubing, 1”	LF	$ 36.25
890	Service Tubing, 1 1/2"	LF	$ 44.00
895	Service Tubing, 2”	LF	$ 53.00
900	Air and Vacuum Valve (individual)	EA	$ 2,350.00
905	Air and Vacuum Valves	GROUP OF 10	$ 21,250.00
910	Automatic Flushing Valve	EA	$ 6,235.00
915	Materials Mark-Up Over Invoice	%	$ 20,000.00
920	Traffic Control Mark-Up Over Invoice	%	$ 8,000.00
925	Street-Cut Permits	Allow.	$ 375.00
930	Project Signs	EA	$ 450.00
935	Archeological Required Delay (after 2 hrs.)	HR	$ 375.00

940	Archeological Required Mob/Demob	LS	$ 450.00
EMERGENCY REPAIR			
9000	Supervisor's Truck with tools	HR	$ 35.00
9100	Backhoe/Skid Steer	HR	$ 58.00
9200	Compressor with tools	HR	$ 55.00
9300	Dump Truck	HR	$ 60.00
9400	Pump	HR	$ 30.00
9500	Laborer	HR	$ 43.00
9600	Pipe Fitter	HR	$ 45.00
9700	Equipment Operator	HR	$ 58.00
9800	Foreman	HR	$ 70.00
9900	Rental Items Mark-Up Over Invoice (multiply $5,000 x your % for Item Price)	%	$ 5,000.00
9950	Materials Mark-Up Over Invoice (multiply $20,000 x your 5 for Item Price)	%	$ 20,000.00

Tax Rate: **8.1875%**

Log # *{Finance use only}*:	
Journal # *{Finance use only}*:	

City of Santa Fe, New Mexico
BUDGET AMENDMENT RESOLUTION (BAR)

DEPARTMENT / DIVISION NAME	DATE
Public Utilities Department / Water Division	10/29/2024

ITEM DESCRIPTION	ORG	OBJECT	PROJECT	INCREASE	DECREASE
EXPENDITURES				*{enter as positive #}*	*{enter as negative #}*
Water Cap Proj, WIP Construction	5050395	572970	WTR2550504	542,188	
REVENUES				*{enter as negative #}*	*{enter as positive #}*
				$ 542,188	$ -

JUSTIFICATION: *(use additional page if needed)*
--Attach supporting documentation/memo

Please see attached Memo.

Contract (3202777) with Sub Surface Contracting Inc for city-wide water line emergency repairs and replacements

Amendment No. 2, Item No. 21-0378.

{Complete section below if BAR results in a net change to ANY Fund}

Fund(s) Affected	Fund Balance Increase/(Decrease)
505	(542,188)
TOTAL:	**(542,188)**

Jonna Leigh Stack for Bill Huey — 10/29/2024
Prepared By *{print name}* — Date

Division Director Signature *{optional}* — Date

John Dupuis (Nov 1, 2024 10:29 MDT)
Department Director Signature, John Dupuis — Date

{Use this form for Finance Committee/ City Council agenda items ONLY}

CITY COUNCIL APPROVAL

City Council Approval Date

Agenda Item #:

Budget Officer — Date

Finance Director *{≤ $5,000}* — Date

City Manager *{≤ $60,000}* — Date

ACORD

CERTIFICATE OF LIABILITY INSURANCE

DATE (MM/DD/YYYY) 7/19/2024

THIS CERTIFICATE IS ISSUED AS A MATTER OF INFORMATION ONLY AND CONFERS NO RIGHTS UPON THE CERTIFICATE HOLDER. THIS CERTIFICATE DOES NOT AFFIRMATIVELY OR NEGATIVELY AMEND, EXTEND OR ALTER THE COVERAGE AFFORDED BY THE POLICIES BELOW. THIS CERTIFICATE OF INSURANCE DOES NOT CONSTITUTE A CONTRACT BETWEEN THE ISSUING INSURER(S), AUTHORIZED REPRESENTATIVE OR PRODUCER, AND THE CERTIFICATE HOLDER.

IMPORTANT: If the certificate holder is an ADDITIONAL INSURED, the policy(ies) must have ADDITIONAL INSURED provisions or be endorsed. If SUBROGATION IS WAIVED, subject to the terms and conditions of the policy, certain policies may require an endorsement. A statement on this certificate does not confer rights to the certificate holder in lieu of such endorsement(s).

PRODUCER License # 0757776 HUB International Insurance Services (SOW) 2905 Rodeo Park Drive East Building 6, Suite 100 Santa Fe, NM 87505	CONTACT NAME: Michelle Vialpando PHONE (A/C, No, Ext): (505) 992-1873 FAX (A/C, No): (866) 487-3972 E-MAIL ADDRESS: michelle.vialpando@hubinternational.com
INSURED Sub Surface Contracting Inc 27A Paseo De River St Santa Fe, NM 87507	INSURER(S) AFFORDING COVERAGE / NAIC # INSURER A : ACUITY, A Mutual Insurance Company 14184 INSURER B : Builders Trust of New Mexico INSURER C : INSURER D : INSURER E : INSURER F :

COVERAGES **CERTIFICATE NUMBER:** **REVISION NUMBER:**

THIS IS TO CERTIFY THAT THE POLICIES OF INSURANCE LISTED BELOW HAVE BEEN ISSUED TO THE INSURED NAMED ABOVE FOR THE POLICY PERIOD INDICATED. NOTWITHSTANDING ANY REQUIREMENT, TERM OR CONDITION OF ANY CONTRACT OR OTHER DOCUMENT WITH RESPECT TO WHICH THIS CERTIFICATE MAY BE ISSUED OR MAY PERTAIN, THE INSURANCE AFFORDED BY THE POLICIES DESCRIBED HEREIN IS SUBJECT TO ALL THE TERMS, EXCLUSIONS AND CONDITIONS OF SUCH POLICIES. LIMITS SHOWN MAY HAVE BEEN REDUCED BY PAID CLAIMS.

INSR LTR	TYPE OF INSURANCE	ADDL INSD	SUBR WVD	POLICY NUMBER	POLICY EFF (MM/DD/YYYY)	POLICY EXP (MM/DD/YYYY)	LIMITS	
A	X COMMERCIAL GENERAL LIABILITY CLAIMS-MADE X OCCUR X PD Ded: $500 GEN'L AGGREGATE LIMIT APPLIES PER: POLICY X PRO-JECT LOC OTHER:	X		Z75944	7/1/2024	7/1/2025	EACH OCCURRENCE DAMAGE TO RENTED PREMISES (Ea occurrence) MED EXP (Any one person) PERSONAL & ADV INJURY GENERAL AGGREGATE PRODUCTS - COMP/OP AGG	$ 1,000,000 $ 250,000 $ 10,000 $ 1,000,000 $ 3,000,000 $ 3,000,000
A	AUTOMOBILE LIABILITY X ANY AUTO OWNED AUTOS ONLY SCHEDULED AUTOS X HIRED AUTOS ONLY X NON-OWNED AUTOS ONLY			Z75944	7/1/2024	7/1/2025	COMBINED SINGLE LIMIT (Ea accident) BODILY INJURY (Per person) BODILY INJURY (Per accident) PROPERTY DAMAGE (Per accident)	$ 1,000,000 $ $ $
A	UMBRELLA LIAB X OCCUR X EXCESS LIAB CLAIMS-MADE DED X RETENTION $ 0			Z75944	7/1/2024	7/1/2025	EACH OCCURRENCE AGGREGATE	$ 2,000,000 $ 2,000,000
B	WORKERS COMPENSATION AND EMPLOYERS' LIABILITY ANY PROPRIETOR/PARTNER/EXECUTIVE OFFICER/MEMBER EXCLUDED? (Mandatory in NH) Y / N: Y If yes, describe under DESCRIPTION OF OPERATIONS below	N / A		0692	1/1/2024	1/1/2025	X PER STATUTE OTH-ER E.L. EACH ACCIDENT E.L. DISEASE - EA EMPLOYEE E.L. DISEASE - POLICY LIMIT	$ 2,000,000 $ 2,000,000 $ 2,000,000
A	Leased/Rented Eqpt			Z75944	7/1/2024	7/1/2025	Ded: $500 / Limit:	200,000

DESCRIPTION OF OPERATIONS / LOCATIONS / VEHICLES (ACORD 101, Additional Remarks Schedule, may be attached if more space is required)

.

SEE ATTACHED ACORD 101

CERTIFICATE HOLDER

City of Santa Fe
Wastewater Division
Attn: Stan Holland
73 Paseo Real
Santa Fe, NM 87507

CANCELLATION

SHOULD ANY OF THE ABOVE DESCRIBED POLICIES BE CANCELLED BEFORE THE EXPIRATION DATE THEREOF, NOTICE WILL BE DELIVERED IN ACCORDANCE WITH THE POLICY PROVISIONS.

AUTHORIZED REPRESENTATIVE

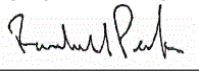

© 1988-2015 ACORD CORPORATION. All rights reserved.
The ACORD name and logo are registered marks of ACORD

ADDITIONAL REMARKS SCHEDULE

AGENCY	License # 0757776	NAMED INSURED
HUB International Insurance Services (SOW)		Sub Surface Contracting Inc 27A Paseo De River St Santa Fe, NM 87507
POLICY NUMBER		
SEE PAGE 1		
CARRIER	NAIC CODE	EFFECTIVE DATE: SEE PAGE 1
SEE PAGE 1	SEE P 1	

ADDITIONAL REMARKS

THIS ADDITIONAL REMARKS FORM IS A SCHEDULE TO ACORD FORM,

FORM NUMBER: ACORD 25 FORM TITLE: Certificate of Liability Insurance

Description of Operations/Locations/Vehicles:
Where required by written contract or agreement, the City of Santa Fe, Wastewater Division, City Representative, other parties reasonably requested in writing by the City of Santa Fe, and their officials, members, officers, employees, and agents are included as additional insured with respects to general liability, on a primary & non-contributory basis.

© 2008 ACORD CORPORATION. All rights reserved.
The ACORD name and logo are registered marks of ACORD

ADDITIONAL INSURED - OWNERS, LESSEES OR CONTRACTORS - AUTOMATIC STATUS WHEN REQUIRED IN CONSTRUCTION AGREEMENT WITH YOU **CG-2033R(6-13)**

This endorsement modifies insurance provided under the following:

COMMERCIAL GENERAL LIABILITY COVERAGE PART

1. Section II - Who Is An Insured is amended to include as an additional insured:

a. Any person or organization for whom you are performing operations when you and such person or organization have agreed in writing in a contract or agreement that such person or organization be added as an additional insured on your policy; and

b. Any other person or organization you are required to add as an additional insured under the contract or agreement described in paragraph a above.

Such person or organization is an additional insured only with respect to liability for *bodily injury, property damage* or *personal and advertising injury* caused, in whole or in part, by:

a. Your acts or omissions; or

b. The acts or omissions of those acting on your behalf;

in the performance of your ongoing operations for the additional insured.

However the insurance afforded to such additional insured:

a. Only applies to the extent permitted by law; and

b. Will not be broader than that which you are required by the contract or agreement to provide for such additional insured.

A person's or organization's status as an additional insured under this endorsement ends when your operations for that additional insured are completed.

2. With respect to the insurance afforded these additional insureds, the following additional exclusions apply:

This insurance does not apply to:

a. *Bodily injury, property damage* or *personal and advertising injury* arising out of the rendering of, or the failure to render, any professional architectural, engineering or surveying services, including:

(1) The preparing, approving or failing to prepare or approve maps, shop drawings, opinions, reports, surveys, field orders, change orders or drawings and specifications; or

(2) Supervisory, inspection, architectural or engineering activities.

This exclusion applies even if the claims against any insured allege negligence or other wrongdoing in the supervision, hiring, employment, training or monitoring of others by that insured, if the *occurrence* which caused the *bodily injury* or *property damage* involved the rendering of or the failure to render any professional architectural, engineering or surveying services.

b. *Bodily injury* or *property damage* occurring after:

(1) All work, including materials, parts or equipment furnished in connection with such work, on the project (other than service, maintenance or repairs) to be performed by or on behalf of the additional insured(s) at the location of the covered operations has been completed; or

(2) That portion of *your work* out of which the injury or damage arises has been put to its intended use by any person or organization other than another contractor or subcontractor engaged in performing operations for a principal as a part of the same project.

3. With respect to the insurance afforded to these additional insureds, the following is added to Section III - Limits Of Insurance:

The most we will pay on behalf of the additional insured is the amount of insurance:

a. Required by the contract or agreement you have entered into with the additional insured; or

b. Available under the applicable Limits of Insurance shown in the Declarations;

whichever is less.

This endorsement shall not increase the applicable Limits of Insurance shown in the Declarations.

ADDITIONAL INSURED - COMPLETED OPERATIONS AUTOMATIC STATUS WHEN REQUIRED IN CONSTRUCTION AGREEMENT WITH YOU (OWNERS, LESSEES OR CONTRACTORS) **CG-7277(6-13)**

This endorsement modifies insurance provided under the following:

COMMERCIAL GENERAL LIABILITY COVERAGE PART

PRODUCTS-COMPLETED OPERATIONS LIABILITY COVERAGE FORM

1. Section II - Who Is An Insured is amended to include as an additional insured:

a. Any person(s) or organization(s) for whom you have performed operations if you and such person(s) or organization(s) have agreed in writing in a contract or agreement that such person(s) or organization(s) be added as additional insured on your policy for completed operations; and

b. Any other person(s) or organization(s) you are required to add as an additional insured under the contract or agreement described in paragraph a above.

Such person or organization is an additional insured only with respect to liability included in the *products-completed operations hazard* for *bodily injury* or *property damage* caused, in whole or in part, by *your work* performed for that additional insured at the location designated and described in the contract or agreement.

However:

a. The insurance afforded to such additional insured only applies to the extent permitted by law; and

b. If coverage provided to the additional insured is required by a contract or agreement, the insurance afforded to such additional insured will not be broader than that which you are required by the contract or agreement to provide for such additional insured.

2. This insurance does not apply to:

a. *Bodily injury* or *property damage* which occurs prior to the execution of the contract or agreement described in item 1; or

b. *Bodily injury* or *property damage* that occurs after the time period during which the contract or agreement described in item 1 requires you to add such person or organization onto your policy as an additional insured for completed operations; or

c. *Bodily injury* or *property damage* arising out of the rendering of, or the failure to render, any professional, architectural, engineering or surveying services, including:

(1) The preparing, approving or failing to prepare or approve maps, shop drawings, opinions, reports, surveys, field orders, change orders or drawings and specifications; or

(2) Supervisory, inspection, architectural or engineering activities.

This exclusion applies even if the claims against any insured allege negligence or other wrongdoing in the supervision, hiring, employment, training or monitoring of others by that insured, if the *occurrence* which caused the *bodily injury* or *property damage* involved the rendering of or the failure to render any professional services by or for you.

3. With respect to the insurance afforded to these additional insureds, the following is added to Section III - Limits Of Insurance:

If coverage provided to the additional insured is required by a contract or agreement, the most we will pay on behalf of the additional insured is the amount of insurance:

a. Required by the contract or agreement; or

b. Available under the applicable Limits of Insurance shown in the Declarations;

whichever is less.

This endorsement shall not increase the applicable Limits of Insurance shown in the Declarations.

PRIMARY AND NONCONTRIBUTORY - OTHER INSURANCE CONDITION **CG-2001R(4-13)**

This endorsement modifies insurance provided under the following:

COMMERCIAL GENERAL LIABILITY COVERAGE PART

PRODUCTS-COMPLETED OPERATIONS LIABILITY COVERAGE FORM

RESIDENTIAL CARE FACILITY LIABILITY COVERAGE PART

The following is added to the Other Insurance Condition and supersedes any provision to the contrary:

Primary And Noncontributory Insurance

This insurance is primary to and will not seek contribution from any other insurance available to an additional insured under your policy provided that:

(1) The additional insured is a Named Insured under such other insurance; and

(2) You have agreed in writing in a contract or agreement that this insurance would be primary and would not seek contribution from any other insurance available to the additional insured.

CITY OF SANTA FE
AMENDMENT No. 1 TO
PRICE AGREEMENT # 21-0378

AMENDMENT No. 1 (the "Amendment") to the CITY OF SANTA FE PRICE AGREEMENT, July 28, 2021 (the "Agreement"), between the City of Santa Fe (the "City") and Sub Surface Contracting Inc. (the "Contractor"). The date of this Amendment shall be the date when it is executed by the City.

RECITALS

A. Under the terms of the Agreement, Contractor has agreed to provide Construction Services for City Wide Utility Construction & Repair for the City of Santa Fe.

B. Pursuant to Article 14 of the Agreement, and for good and valuable consideration, the receipt and sufficiency of which are acknowledged by the parties, the City and the Contractor agree as follows:

1. COMPENSATION.

Article 2, paragraph A of the Agreement is amended to remove the per Fiscal Year Cap, so that Article 2, paragraph A reads in its entirety as follows:

2. Compensation.

A. The City shall pay to the Contractor in full payment for services satisfactorily performed BASED UPON THE ATTACHED PRICE SHEETS, such compensation not to exceed one million dollars ($1,000,000) excluding gross receipts tax for a total of 4 years. The New Mexico gross receipts tax levied on the amounts payable under this Agreement totaling eighty-four thousand three hundred seventy-five dollars ($84,375) shall be paid by the City to the Contractor. **The total amount payable to the Contractor under this Agreement, including gross receipts tax and expenses, shall not exceed one million eighty-four thousand three hundred and seventy-six dollars ($1,084,376). This amount is a maximum and not a guarantee that the work assigned to be performed by Contractor under this Agreement shall equal the amount stated herein. The parties do not intend for the Contractor to continue to**

provide services without compensation when the total compensation amount is reached. Contractor is responsible for notifying the City when the services provided under this Agreement reach the total compensation amount. In no event will the Contractor be paid for services provided in excess of the total compensation amount without this Agreement being amended in writing prior to those services in excess of the total compensation amount being provided.

2. AGREEMENT IN FULL FORCE.

Except as specifically provided in this Amendment, the Agreement remains and shall remain in full force and effect, in accordance with its terms.

IN WITNESS WHEREOF, the parties have executed this Amendment No.1 to the City of Santa Fe Price Agreement as of the dates set forth below.

CITY OF SANTA FE:

ALAN WEBBER, MAYOR

Date: May 23, 2022

CONTRACTOR:
SUB SURFACE CONTRACTING.
NEAL KEIPER

NAME & TITLE

Date: 4-14-22

CRS# 02104256000
Registration #4691

ATTEST:

KRISTINE BUSTOS MIHELCIC, CITY CLERK
GB MTG 05/11/2022

CITY ATTORNEY'S OFFICE:

Marcos Martinez
Marcos Martinez (Apr 11, 2022 08:11 MDT)

Apr 11, 2022

SENIOR ASSISTANT CITY ATTORNEY

APPROVED:

Alexis Lotero
Alexis Lotero (May 22, 2022 21:51 MDT)

~~MARY MCCOY~~, FINANCE DIRECTOR
5050386.520200 AH
AH

(Rev. 4/20)

City of Santa Fe
Central Purchasing Office

Price Agreement

Awarded Contractor(s): 1) Sub Surface Contracting, Inc. 2) A.A.C. Construction, LLC.	**Price Agreement Number:** **Payment Terms: Net 30**
Ship To: **All City of Santa Fe Departments and Political Subdivisions allowed by Law**	**F.O.B.: Destination**
Invoice To: **City of Santa Fe** **Accounts Payable** **PO Box 909** **Santa Fe, NM 87504-0909**	**Term: July 1, 2021 to June 30, 2025** **Delivery: As requested by Department**

Title: City Wide Water Utility Construction & Repair Price Agreement, CIP # 3057

This Price Agreement is to be awarded pursuant to the respective Invitation to Bid (ITB) 21/37/B and shall become a part thereof.

This Price Agreement is made subject to the "terms and conditions" as indicated on subsequent price agreement articles and construction contract pages.

Instructions to Supplier:

- By commencing under this Price Agreement (Agreement), the Contractor agrees to all terms and conditions within and attached and agrees that if there is a conflict with the Contractors terms, the City of Santa Fe's terms and conditions shall govern. In cases of discrepancy between the work order, purchase order and this Agreement, the terms and conditions of this Agreement shall prevail.
- Do not fill orders for goods/services not listed in this Agreement.
- Orders against this Agreement must be placed with as a separate contract work order with a purchase order.
- Do not fill orders without a valid quote, purchase order work order.
- The purchase order release number must be on all invoices.
- The City of Santa Fe (City) will not be liable for purchases made by unauthorized individuals.

Please forward all original invoice(s) to the Accounts Payable Department at PO Box 909, Santa Fe, NM 87504-0909

Instructions to Requesting Department:

- Do not place orders for goods/services not listed in the Procurement Contract.
- To place an order against this Procurement Contract, issue a Purchase Order Release before placing the order with the Supplier.

This Price Agreement is made subject to the "terms and conditions" as indicated on subsequent pages.

Terms and Conditions

General: When the City or the Requesting Department issues a contract or a purchase order release, a binding contract is created.

Variation in Quantity: No variation in the quantity of any item called for by this order will be accepted unless such variation has been caused by conditions of loading, shipping, packing or allowances in manufacturing process and then only to the extent, if any, specified in this order.

Assignment:

a. Neither the order, nor any interest therein, nor any claim thereunder, shall be assigned or transferred by the Contractor, except as set forth in Subparagraph 3b or as expressly authorized in writing by the Chief Procurement Officer or his/her designee. No such assignment or transfer shall relieve the Contractor from the obligations and liabilities under this order.

b. Contractor agrees that any and all claims for overcharge resulting from antitrust violations which are borne by the City as to goods, services, and materials purchased in connection with this agreement are hereby assigned to the City.

City Furnished Property: City furnished property shall be returned to the City upon request in the same condition as received except for ordinary wear, tear and modifications ordered hereunder.

Inspection: Final inspection and acceptance will be made at the destination. Supplies rejected at the destination for nonconformance with specifications shall be removed at the Contractor's risk and expense, promptly after notice of rejection.

Inspection of Plant: The Chief Procurement Officer or his/her designee may inspect, at any reasonable time, the part of the Contractor's, or any subcontractor's plant or place of business, which is related to the performance of this contract.

Commercial Warranty: The Contractor agrees that the supplies or services furnished under this order shall be covered by the most favorable commercial warranties the Contractor gives for such to any customer for such supplies or services. The rights and remedies provided herein shall extend to the City and are in addition to and do not limit any rights afforded to the City by any other clause of this order. **Contractor agrees not to disclaim warranties of fitness for a particular purpose of merchantability.**

Taxes: The unit price shall exclude all state taxes.

Default: The City reserves the right to cancel all or any part of this order without cost to the City, if the Contractor fails to meet the provisions of this order and, except as otherwise provided herein, to hold the Contractor liable for any excess cost occasioned by the City due to the Contractor's default. The Contractor shall not be liable for any excess costs if failure to perform the order arises out of causes beyond the control and without the fault or negligence of the Contractor, such causes include but are not restricted to, acts of God or the public enemy, acts of the State or Federal Government, fires, floods, epidemics, quarantine restrictions, strikes, freight embargoes, unusually severe weather and defaults of subcontractors due to any of the above, unless the City shall determine that the supplies or services to be furnished by the subcontractor were obtainable from other sources in sufficient time to permit the Contractor to meet the required delivery scheduled. The rights of

the City provided in this paragraph shall not be exclusive and are in addition to any other rights now being provided by law or under this order.

Non-Collusion: In signing this bid the Contractor certifies he/she has not, either directly or indirectly, entered into action in restraint of free competitive bidding in connection with this offer submitted to the Chief Procurement Officer or his/her designee.

Nondiscrimination: Contractor doing business with the City must be in compliance with the Federal Civil Rights Act of 1964 and Title VII of the Act (Rev. 1979) and the Americans with Disabilities Act of 1990 (Public Law 101-336).

The Procurement Code: Sections 13-1-28 through 13-1-199 NMSA 1978, imposes civil and criminal penalties for its violation. In addition the New Mexico criminal statutes impose felony penalties for bribes, gratuities and kickbacks.

Items: All bid items are to be NEW and of most current production, unless otherwise specified.

Payment for Purchases: Except as otherwise agreed to: late payment charges may be assessed against the Requesting Department in the amount and under the conditions set forth in Section 13-1-158 NMSA 1978.

Workers' Compensation: The Contractor agrees to comply with state laws and rules pertaining to Workers' Compensation benefits for its employees. If the Contractor fails to comply with Workers' Compensation Act and applicable rules when required to do so, this Agreement may be terminated by the contracting agency.

Contractor Personnel: Personnel proposed in the Contractor's written bid to the Procuring Agency are considered material to any work performed under this Price Agreement. Once a Purchase Order or contract has been executed, no changes of personnel will be made by the Contractor without prior written consent of the Requesting Department. Replacement of any Contractor personnel, if approved, shall be with personnel of equal ability, experience, and qualifications. The Contractor will be responsible for any expenses incurred in familiarizing the replacement personnel to insure their being productive to the project immediately upon receiving assignments. Approval of replacement personnel shall not be unreasonably withheld. The Requesting Department shall retain the right to request the removal of any of the Contractor's personnel at any time.

Subcontracting: The Contractor shall not subcontract any portion of the Price Agreement without the prior written approval of the Requesting Department. No such subcontracting shall relieve the Contractor from its obligations and liabilities under this Price Agreement, nor shall any subcontracting obligate payment from the City.

Records and Audit: The Contractor shall maintain detailed time and expenditure records that indicate the date, time, nature, and cost of services rendered during this Price Agreement's term and effect, and retain them for a period of three (3) years from the date of final payment under this Price Agreement. The records shall be subject to inspection by the City. The City shall have the right to audit billings, both before and after payment. Payment for services under this Price Agreement shall not foreclose the right of the City to recover excessive or illegal payments.

Subcontracts: The foregoing requirements for Contractor Personnel, Subcontracting, and Audit shall be inserted into all subcontracts from the prime contractor to the subcontractor.

ARTICLES

Article I – Statement of Work
Under the terms and conditions of this Price Agreement all commissions, institutions, political subdivisions and local public bodies allowed by law may issue orders for items and/or services described herein. The terms and conditions of this Price Agreement shall form a part of each order issued hereunder.

The items and/or services to be ordered shall be as listed under Article IX - Price Schedule. All orders issued hereunder will bear both an order number and this Price Agreement number. It is understood that no guarantee or warranty is made or implied by the City's Chief Procurement Officer, his/her designee or the Requesting Department that any order for any definite quantity will be issued under this Price Agreement. The Contractor is required to accept the order and furnish the items and/or services in accordance with the articles contained hereunder for the quantity of each order.

Article II – Term
The term of this Price Agreement, for issuance of orders, shall be as indicated in the specifications.

Article III – Specifications
Items and/or services furnished hereunder shall conform to the requirements of specifications and/or drawings applicable to items listed under Article IX-Price Schedule. Orders issued against this schedule will show the applicable Price Agreement item(s), number(s), and price(s); however they may not describe the item(s) fully.

Article IV – Shipping and Billing Instructions
Delivery shall be as called for by the Requesting Department. Shipment shall be made only against specific orders which the Requesting Department may place with the Contractor during the term. Contractor shall ship in accordance with the following instructions:

a. The Contractor shall enclose a packing list with each shipment listing the City's purchasing document number and the Contractor's name, Requesting Department's contact name and location shall be shown on each packing and delivery ticket, package, bill of lading, the commercial parts number (if any) for each item and other correspondence in connection with the shipments. The Requesting Department's count will be accepted by the Contractor as final and conclusive on all shipments not accompanied by a packing ticket.

b. The Contractor's invoice shall be submitted duly certified and shall contain the following information: order number, description of supplies or services, quantities, unit price and extended totals. Separate invoices shall be rendered for each and every complete shipment.

c. Invoices must be submitted to the City's **Accounts Payable** and NOT the Central Purchasing Office.

If Contractor is unable to meet stated delivery the City's Chief Procurement Officer or his/her designee must be notified.

Article V – Termination
The City may terminate this Agreement for convenience or cause. The Contractor may only terminate this Agreement based upon the City's uncured, material breach of this Agreement. Contractor shall give the City written notice of termination at least thirty (30) days prior to the intended date of termination, which notice shall (i) identify all the City's material breaches of this Agreement upon which the termination is based and (ii) state what the City must do to cure such material breaches. Contractor's notice of termination shall only be effective (i) if the City does not cure all material breaches within the thirty (30) day notice period or (ii) in the case of material breaches that cannot be cured within thirty (30) days, the City does not, within the thirty (30) day notice period, notify the Contractor of its intent to cure and begin with due diligence to cure the material breach.

Termination of this Contract, however, shall not affect any outstanding orders. This provision is not exclusive and shall not waive other rights and remedies afforded either party in the event of breach of contract or default. In such instances the contract may be cancelled effective immediately.

Article VI – Amendment
This Price Agreement may be amended by mutual agreement of the City's Chief procurement Officer or his/her designee and the Contractor upon written notice by either party to the other. An amendment to this Price Agreement shall not affect any outstanding orders issued prior to the effective date of the amendment as mutually agreed upon, and as published by the City's Chief procurement Officer or his/her designee. Amendments affecting price adjustments and/or the extension of a price agreement expiration date are not allowed unless specifically provided in the bid and price agreement specifications.

Article VII – Indemnity Clause
Contractor shall indemnify and hold harmless the City, its officers and employees, against liability, claims, damages, losses or expenses arising out of bodily injury to persons or damage to properties caused by, or resulting from Contractor's, and/or its employees, own negligent act or omission while Contractor, and/or its employees, perform or fails to perform its obligations and duties under the Terms and Conditions of this agreement. This hold harmless and indemnification clause is subject to the immunities, provisions, and limitations of the Tort Claims Act (Section 41-4-1, et seq., N.M.S.A. 1978 comp. and Section 57-7-1 N.M.S.A. 1878 comp. and any amendments thereto.

It is specifically agreed between the parties executing this agreement that it is not intended by any of the provisions of any part of the agreement to create in the public or any member thereof a third party beneficiary or to authorize anyone not a party to the agreement to maintain a suit(s) for wrongful death(s), bodily and/ or personal injury(s) to person(s), damage(s) to property(ies) and/or any other claim(s) whatsoever pursuant to the provisions of this agreement.

Contractor shall provide all insurance necessary to employees on the work site, including but not limited to Worker's Compensation.

Article VIII – Issuance or Orders
Only written signed orders are valid under this Price Agreement.

Article IX – Packing (if applicable)
Packing shall be in conformance with standard commercial practices.

Article X – Price Schedule
Prices as listed in the item(s) price schedule hereto attached are firm.

Article XI – Wage Rates
Pursuant to the requirements of any Contract entered into that will have a Work Order (WO) in excess of sixty thousand dollars ($60,000) for construction is subject to the minimum wage rate determination issued by the New Mexico Department of Work Force Solutions for this project/WO.

Item#_21-0378_
Munis Contract#_____

CITY OF SANTA FE

ON CALL CITY-WIDE WATER UTILITY CONSTRUCTION & REPAIR PRICE AGREEMENT, CIP # 3057

THIS AGREEMENT is made and entered into by and between the **CITY OF SANTA FE, NEW MEXICO**,hereinafter referred to as the "City," and **SUB SURFACE CONTRACTING, INC. AND A.A.C. CONSTRUCTION**, hereinafter referred to as the "Contractor" and is effective as of the date set forth below upon which it is executed by the Parties.

IT IS AGREED BETWEEN THE PARTIES:

1. Scope of Work.

A. The Contractor shall perform the following work:

1) The Contractor shall perform all the work required by Water Division, as required, on each Work Order (W/O) in the Contract Documents (attached) for City-Wide Water Construction & Repair Contract. The work consists of, but is not limited to furnishing all equipment, labor and materials for the construction and repair of water mains, valves, hydrants, metered water service lines and settings, pressure reducing valves, vaults, and other incidental work such as pavement removal and replacement, traffic control all as required to extend, replace or repair water distribution, water storage, and water supply infrastructure, in accordance with the drawings, specifications, W/O, attached price sheets and other Contract Documents. All water piping shall be new, poly-wrapped ductile iron, unless otherwise specified.

2) The Contractor shall be responsible for verifications of all measurements and dimensions for bidding on each subsequent Work Order.

3) The Contractor shall provide and keep at the work site, a complete "as-built" record set of drawings that shall be corrected daily and shall show every change from the original approved drawings and specifications. These changes shall be forwarded to City periodically. The drawings shall reflect exact and actual "as-built" conditions of construction, installation, and erection as it progresses. Where drawings are not adequate to show "as-built" conditions, Contractor shall prepare sketches which delineate the necessary "as-built" information. City shall furnish two (2) sets of all paper "blue-line" print "approved" drawings for use in accomplishing specified mark-up. Final "as-built" drawings shall be delivered to City by Contractor upon completion of the work.

4) The Contractor shall be responsible for maintaining traffic control at the site in conformance with the Manual on Uniform Traffic Control Devices.

5) The Contractor shall be responsible for all permits, fees, and State and City inspections associated with the construction.

6) Incorporation by Reference. All exhibits, addenda, schedules of ITB 21/37/B attached hereto and all certificates, work order documents, drawings, as-builts and other instruments contemplated to be delivered hereunder are hereby expressly made a part of this Agreement as fully as though set forth herein, and all references to this Agreement herein or in any of such writings shall be deemed to refer to and include all of such writings. This Agreement contains the entire agreement between the parties with respect to the subject matter hereof and supersedes all prior agreements and understandings, both written and oral, among the parties with respect to the subject matter hereof. If there is any conflict between such exhibits or addenda and the terms of this Agreement, such exhibits or addenda shall control.

2. Compensation.

A. The City shall pay to the Contractor in full payment for services satisfactorily performed BASED UPON THE ATTACHED PRICE SHEETS, such compensation not to exceed two hundred and fifty thousand dollars ($250,000) excluding gross receipts tax per Fiscal Year for a total of four (4) years. The New Mexico gross receipts tax levied on the amounts payable under this Agreement totaling twenty one thousand and ninety four dollars ($21,094) shall be paid by the City to the Contractor per Fiscal Year. **The total amount payable to the Contractor under this Agreement, including gross receipts tax and expenses, shall not exceed one million eighty four thousand three hundred and seventy six dollars ($1,084,376.). This amount is a maximum and not a guarantee that the work assigned to be performed by Contractor under this Agreement shall equal the amount stated herein. The parties do not intend for the Contractor to continue to provide services without compensation when the total compensation amount is reached. Contractor is responsible for notifying the City when the services provided under this Agreement reach the total compensation amount. In no event will the Contractor be paid for services provided in excess of the total compensation amount without this Agreement being amended in writing prior to those services in excess of the total compensation amount being provided.**

B. Payment is subject to availability of funds pursuant to the Appropriations Paragraph set forth below and to any negotiations between the parties from year to year pursuant to Paragraph 1, Scope of Work, and to approval by the City. All invoices MUST BE received by the City no later than thirty 30) days after the termination of the Fiscal Year in which the services were delivered. Invoices received after such date WILL NOT BE PAID.

C. Payment in future fiscal years is subject to availability of funds pursuant to the Appropriations Paragraph set forth below and to any negotiations between the parties from year to year pursuant to Paragraph 1, Scope of Work, and to approval by the City. All invoices MUST BE received by the City no later than fifteen (15) days after the termination of the Fiscal Year in which the services were delivered. Invoices received after such date WILL NOT BE PAID.)

E. The Contractor must submit a detailed statement accounting for all services performed and expenses incurred. If the City finds that the services are not acceptable, within thirty days after the date of receipt of written notice from the Contractor that payment is requested, it shall provide the Contractor a letter of exception explaining the defect or objection to the services, and outlining steps the Contractor may take to provide remedial action. Upon certification by the City that the services have been received and accepted, payment shall be tendered to the Contractor within thirty days after the date of acceptance. If payment is made by mail, the payment shall be deemed tendered on the date it is

postmarked. However, the City shall not incur late charges, interest, or penalties for failure to make payment within the time specified herein.

3. Term.

THIS AGREEMENT SHALL NOT BECOME EFFECTIVE UNTIL APPROVED BY THE CITY. This Agreement shall terminate on **June 30, 2025**unless terminated pursuant to paragraph 4 (Termination), or paragraph 5 (Appropriations). In accordance with Section 13-1-150 NMSA 1978, no contract term for a professional services contract, including extensions and renewals, shall exceed four years, except as set forth in Section 13-1-150 NMSA 1978.

4. Termination.

A. Termination. This Agreement may be terminated by either of the parties hereto upon written notice delivered to the other party at least thirty (30) days prior to the intended date of termination. Except as otherwise allowed or provided under this Agreement, the City's sole liability upon such termination shall be to pay for acceptable work performed prior to the Contractor's receipt of the notice of termination, if the City is the terminating party, or the Contractor's sending of the notice of termination, if the Contractor is the terminating party; provided, however, that a notice of termination shall not nullify or otherwise affect either party's liability for pre-termination defaults under or breaches of this Agreement. The Contractor shall submit an invoice for such work within thirty (30) days of receiving or sending the notice of termination. Notwithstanding the foregoing, this Agreement may be terminated immediately upon written notice to the Contractor if the Contractor becomes unable to perform the services contracted for, as determined by the City or if, during the term of this Agreement, the Contractor or any of its officers, employees or agents is indicted for fraud, embezzlement or other crime due to misuse of City funds or due to the Appropriations paragraph herein. *THIS PROVISION IS NOT EXCLUSIVE AND DOES NOT WAIVE THE City's OTHER LEGAL RIGHTS AND REMEDIES CAUSED BY THE CONTRACTOR'S DEFAULT/BREACH OF THIS AGREEMENT.*

B. Termination Management. Immediately upon receipt by either the City or the Contractor of notice of termination of this Agreement, the Contractor shall: 1) not incur any further obligations for salaries, services or any other expenditure of funds under this Agreement without written approval of the City; 2) comply with all directives issued by the City in the notice of termination as to the performance of work under this Agreement; and 3) take such action as the City shall direct for the protection, preservation, retention or transfer of all property titled to the City and records generated under this Agreement. Any non-expendable personal property or equipment provided to or purchased by the Contractor with contract funds shall become property of the City upon termination and shall be submitted to the City as soon as practicable.

5. Appropriations.

The terms of this Agreement are contingent upon sufficient appropriations and authorization being made by the City Council for the performance of this Agreement. If sufficient appropriations and authorization are not made by the City Council, this Agreement shall terminate immediately upon written notice being given by the City to the Contractor. The City's decision as to whether sufficient appropriations are available shall be accepted by the Contractor and shall be final. If the City proposes an amendment to the Agreement to unilaterally reduce funding, the Contractor shall have the option to terminate the Agreement or to agree to the reduced funding, within thirty (30) days of receipt of the proposed amendment.

6. Status of Contractor.

The Contractor and its agents and employees are independent contractors performing professional services for the City and are not employees of the City. The Contractor and its agents and employees shall not accrue leave, retirement, insurance, bonding, use of City vehicles, or any other benefits afforded to employees of the City as a result of this Agreement. The Contractor acknowledges that all sums received hereunder are reportable by the Contractor for tax purposes, including without limitation, self-employment and business income tax. The Contractor agrees not to purport to bind the City unless the Contractor has express written authority to do so, and then only within the strict limits of that authority.

7. Construction Contract Performance and Payment Bond.

A. When a construction contract is awarded in excess of twenty-five thousand dollars ($25,000), the following bonds or security shall be delivered to the City and shall become binding on the parties upon the execution of the contract. If the Contractor fails to deliver the required performance and payment bonds, the Contractor's bid shall be rejected, its bid security shall be enforced to the extent of actual damages. Award of the contract shall be made pursuant to the Procurement Code in the following manner:

1) a performance bond satisfactory to the City, executed by a surety company authorized to do business in this state and said surety to be approved in federal circular 570 as published by the United States treasury department or the state board of finance or the local governing authority, in an amount equal to one hundred percent of the price specified in the contract; and

2) a payment bond satisfactory to the City, executed by a surety company authorized to do business in this state and said surety to be approved in federal circular 570 as published by the United States treasury department or the state board of finance or the local governing authority, in an amount equal to one hundred percent of the price specified in the contract, for the protection of all persons supplying labor and material to the contractor or its subcontractors for the performance of the work provided for in the contract.

B. A subcontractor shall provide a performance and payment bond on a public works building project if the subcontractor's contract for work to be performed on a project is one hundred twenty-five thousand dollars ($125,000) or more.

8. Assignment.

The Contractor shall not assign or transfer any interest in this Agreement or assign any claims for money due or to become due under this Agreement without the prior written approval of the City.

9. Subcontracting.

The Contractor shall not subcontract any portion of the services to be performed under this Agreement without the prior written approval of the City. No such subcontract shall relieve the primary Contractor from its obligations and liabilities under this Agreement, nor shall any subcontract obligate direct payment from the City.

10. Release.

Final payment of the amounts due under this Agreement shall operate as a release of the City, its officers and employees from all liabilities, claims and obligations whatsoever arising from or under this Agreement.

11. Confidentiality.

Any confidential information provided to or developed by the Contractor in the performance of this Agreement shall be kept confidential and shall not be made available to any individual or organization by the Contractor without the prior written approval of the City.

12. Product of Service – Copyright.

All materials developed or acquired by the Contractor under this Agreement shall become the property of the City and shall be delivered to the City no later than the termination date of this Agreement. Nothing developed or produced, in whole or in part, by the Contractor under this Agreement shall be the subject of an application for copyright or other claim of ownership by or on behalf of the Contractor.

13. Conflict of Interest; Governmental Conduct Act.

A. The Contractor represents and warrants that it presently has no interest and, during the term of this Agreement, shall not acquire any interest, direct or indirect, which would conflict in any manner or degree with the performance or services required under the Agreement.

B. The Contractor further represents and warrants that it has complied with, and, during the term of this Agreement, will continue to comply with, and that this Agreement complies with all applicable provisions of the Governmental Conduct Act, Chapter 10, Article 16 NMSA 1978.

C. Contractor's representations and warranties in Paragraphs A and B of this Article 12 are material representations of fact upon which the City relied when this Agreement was entered into by the parties. Contractor shall provide immediate written notice to the City if, at any time during the term of this Agreement, Contractor learns that Contractor's representations and warranties in Paragraphs A and B of this Article 12 were erroneous on the effective date of this Agreement or have become erroneous by reason of new or changed circumstances. If it is later determined that Contractor's representations and warranties in Paragraphs A and B of this Article 12 were erroneous on the effective date of this Agreement or have become erroneous by reason of new or changed circumstances, in addition to other remedies available to the City and notwithstanding anything in the Agreement to the contrary, the City may immediately terminate the Agreement.

D. All terms defined in the Governmental Conduct Act have the same meaning in this section.

14. Amendment.

A. This Agreement shall not be altered, changed or amended except by instrument in writing executed by the parties hereto and all other required signatories.

B. If the City proposes an amendment to the Agreement to unilaterally reduce funding due to budget or other considerations, the Contractor shall, within thirty (30) days of receipt of the proposed Amendment, have the option to terminate the Agreement, pursuant to the termination provisions as set forth in Article 4 herein, or to agree to the reduced funding.

15. Change Orders.

Changes. The Contractor may only make changes or revisions within the Scope of Work as defined by Article 1 and/or Exhibit 1 after receipt of written approval by the City Manager or his/her designee. Such change may only be made to Tasks or Sub-Task as defined in the Scope of Work. Under no circumstance shall such change affect the:

1. Deliverable requirements, as outlined in the Scope of Work;
2. Due date of any Deliverable, as outlined in the Scope of Work;
3. Compensation of any Deliverable, as outlined in the Scope of Work;
4. Agreement compensation, as outlined in Article 2; or
5. Agreement termination, as outlined in Article 4.

Change Request Process. In the event that circumstances warrant a change to accomplish the Scope of Work as described above, a Change Request shall be submitted that meets the following criteria:

The Project Manager shall draft a written Change Request for review and approval by the City Manager to include:

1. the name of the person requesting the change;
2. a summary of the required change;
3. the start date for the change;
4. the reason and necessity for change;
5. the elements to be altered; and
6. the impact of the change.

The City Manager shall provide a written decision on the Change Request to the Contractor within a maximum of ten (10) Business Days of receipt of the Change Request. All decisions made by the City Manager are final. Change Requests, once approved, become a part of the Agreement and become binding as a part of the original Agreement.

16. Merger.

This Agreement incorporates all the Agreements, covenants and understandings between the parties hereto concerning the subject matter hereof, and all such covenants, Agreements and understandings have been merged into this written Agreement. No prior Agreement or understanding, oral or otherwise, of the parties or their agents shall be valid or enforceable unless embodied in this Agreement.

17. Entire Agreement.

This Agreement, together with any other documents incorporated herein by reference and all related Exhibits and Schedules constitutes the sole and entire agreement of the Parties with respect to the subject matter of this Agreement, and supersedes all prior and contemporaneous understandings, agreements, representations, and warranties, both written and oral, with respect to the subject matter. In the event of any inconsistency between the statements in the body of this Agreement, and the related Exhibits and Schedules, the statements in the body of this Agreement shall control.

18. Penalties for violation of law.

The Procurement Code, Sections 13-1-28 through 13-1-199, NMSA 1978, imposes civil and criminal penalties for its violation. In addition, the New Mexico criminal statutes impose felony penalties for illegal bribes, gratuities and kickbacks.

19. Equal Opportunity Compliance.

The Contractor agrees to abide by all federal and state laws and rules and regulations, and Santa Fe City Code, pertaining to equal employment opportunity. In accordance with all such laws of the State of New Mexico, the Contractor assures that no person in the United States shall, on the grounds of race, religion, color, national origin, ancestry, sex, age, physical or mental handicap, or serious medical condition, spousal affiliation, sexual orientation or gender identity, be excluded from employment with or participation in, be denied the benefits of, or be otherwise subjected to discrimination under any program or activity performed under this Agreement. If Contractor is found not to be in compliance with these requirements during the life of this Agreement, Contractor agrees to take appropriate steps to correct these deficiencies.

20. Applicable Law.

The laws of the State of New Mexico shall govern this Agreement, without giving effect to its choice of law provisions. Venue shall be proper only in a New Mexico court of competent jurisdiction in accordance with Section 38-3-1 (G) NMSA 1978. By execution of this Agreement, Contractor acknowledges and agrees to the jurisdiction of the courts of the State of New Mexico over any and all lawsuits arising under or out of any term of this Agreement.

21. Workers Compensation.

The Contractor agrees to comply with state laws and rules applicable to workers compensation benefits for its employees. If the Contractor fails to comply with the Workers Compensation Act and applicable rules when required to do so, this Agreement may be terminated by the City.

22. Professional Liability Insurance.

Contractor shall maintain professional liability insurance throughout the term of this Agreement providing a minimum coverage in the amount required under the New Mexico Tort Claims Act. The Contractor shall furnish the City with proof of insurance of Contractor's compliance with the provisions of this section as a condition prior to performing services under this Agreement.

23. Other Insurance

If the services contemplated under this Agreement will be performed on or in City facilities or property, Contractor shall maintain in force during the entire term of this Agreement, the following insurance coverage(s), naming the City as additional insured.

A. Commercial General Liability insurance shall be written on an occurrence basis and be a broad as ISO Form CG 00 01 with limits not less than $2,000,000 per occurrence and $2,000,000 in the aggregate for claims against bodily injury, personal and advertising injury, and property damage. Said policy shall include broad form Contractual Liability coverage and be endorsed to name the City of Santa Fe their officials, officers, employees, and agents as additional insureds.

B. Business Automobile Liability insurance for all owned, non-owned automobiles, with a combined single limit not less than $1,000,000 per accident.

C. Broader Coverage and Limits. The insurance requirements under this Agreement shall be the greater of (1) the minimum coverage and limits specified in this Agreement, or (2) the broader coverage and maximum limits of coverage of any insurance policy or proceeds available to the Named Insured. It is agreed that these insurance requirements shall not in any way act to reduce coverage that is broader or that includes higher limits than the minimums required herein. No representation is made that the minimum insurance requirements of this Agreement are sufficient to cover the obligations of Contractor hereunder.

D. Contractor shall maintain the above insurance for the term of this Agreement and name the City as an additional insured and provide for 30 days cancellation notice on any Certificate of Insurance form furnished by Contractor. Such certificate shall also specifically state the coverage provided under the policy is primary over any other valid and collectible insurance and provide a waiver of subrogation.

24. Records and Financial Audit.

The Contractor shall maintain detailed time and expenditure records that indicate the date; time, nature and cost of services rendered during the Agreement's term and effect and retain them for a period of three (3) years from the date of final payment under this Agreement. The records shall be subject to inspection by the City. The City shall have the right to audit billings both before and after payment. Payment under this Agreement shall not foreclose the right of the City to recover excessive or illegal payments

25. Indemnification.

The Contractor shall defend, indemnify and hold harmless the City from all actions, proceeding, claims, demands, costs, damages, attorneys' fees and all other liabilities and expenses of any kind from any source which may arise out of the performance of this Agreement, caused by the negligent act or failure to act of the Contractor, its officers, employees, servants, subcontractors or agents, or if caused by the actions of any client of the Contractor resulting in injury or damage to persons or property during the time when the Contractor or any officer, agent, employee, servant or subcontractor thereof has or is performing services pursuant to this Agreement. In the event that any action, suit or proceeding related to the services performed by the Contractor or any officer, agent, employee, servant or subcontractor under this Agreement is brought against the Contractor, the Contractor shall, as soon as practicable but no later than two (2) days after it receives notice thereof, notify the legal counsel of the City.

26. New Mexico Tort Claims Act

Any liability incurred by the City of Santa Fe in connection with this Agreement is subject to the immunities and limitations of the New Mexico Tort Claims Act, Section 41-4-1, et. seq. NMSA 1978, as amended. The City and its "public employees" as defined in the New Mexico Tort Claims Act, do not waive sovereign immunity, do not waive any defense and do not waive any limitation of liability pursuant to law. No provision in this Agreement modifies or waives any provision of the New Mexico Tort Claims Act.

27. Invalid Term or Condition.

If any term or condition of this Agreement shall be held invalid or unenforceable, the remainder of this Agreement shall not be affected and shall be valid and enforceable.

28. Enforcement of Agreement.

A party's failure to require strict performance of any provision of this Agreement shall not waive or diminish that party's right thereafter to demand strict compliance with that or any other provision. No waiver by a party of any of its rights under this Agreement shall be effective unless express and in writing, and no effective waiver by a party of any of its rights shall be effective to waive any other rights.

29. Notices.

Any notice required to be given to either party by this Agreement shall be in writing and shall be delivered in person, by courier service or by U.S. mail, either first class or certified, return receipt requested, postage prepaid, as follows:

To the City:
Public Utilities Department
Water Division
801 W. San Mateo
Santa Fe, NM 87504

To the Contractor:
Sub Surface Contracting Inc.
27A Paseo de River
Santa Fe, NM 87507

30. Authority.

If Contractor is other than a natural person, the individual(s) signing this Agreement on behalf of Contractor represents and warrants that he or she has the power and authority to bind Contractor, and that no further action, resolution, or approval from Contractor is necessary to enter into a binding contract.

IN WITNESS WHEREOF, the Parties have executed this Agreement as of the date of the signature by the required approval authorities below.

CITY OF SANTA FE:

ALAN WEBBER, MAYOR

DATE: Aug 4, 2021

CONTRACTOR:
SUB SURFACE CONTRACTING INC.

NAME

General Manager
TITLE

DATE: 6-17-2021

CRS# 02104256000
Registration # 46991

ATTEST:

Kristine Mihelcic
Kristine Mihelcic (Aug 4, 2021 14:46 MDT)

KRISTINE BUSTOS MIHIELCIC, CITY CLERK
GB MTG 07/28/2021

CITY ATTORNEY'S OFFICE:

Marcos Martinez
Marcos Martinez (Jun 16, 2021 16:07 MDT)

SENIOR ASSISTANT CITY ATTORNEY

APPROVED FINANCES:

Mary McCoy

MARY MCCOY, FINANCE DIRECTOR

5050395.572970 AJH
Org. Name/Org#. AJH

WTR1950536

GB Subsurface CW Contract 3202777 Amend 2 Full Packet For Purchasing Budget FD Sig 11Nov2024

Interim Agreement Report 2024-11-12

Created:	2024-11-12
By:	JAMES EDWARDS (jwedwards@santafenm.gov)
Status:	Out for Signature
Transaction ID:	CBJCHBCAABAApjATGnLxq3NOmSG08YbSOyQhD_Zc_zuk

Agreement History

Agreement history is the list of the events that have impacted the status of the agreement prior to the final signature. A final audit report will be generated when the agreement is complete.

"GB Subsurface CW Contract 3202777 Amend 2 Full Packet For Purchasing Budget FD Sig 11Nov2024" History

Document created by JAMES EDWARDS (jwedwards@santafenm.gov)

2024-11-12 - 2:56:51 PM GMT- IP address: 97.182.23.177

Document emailed to ajhopkins@santafenm.gov ajhopkins@santafenm.gov (ajhopkins@santafenm.gov) for signature

2024-11-12 - 2:59:45 PM GMT

Powered by Adobe Acrobat Sign

GB Subsurface CW Contract 3202777 Amend 2 Full Packet For Purchasing Budget FD Sig 11Nov2024

Final Audit Report 2024-11-12

Created:	2024-11-12
By:	Kristy Miera (kamiera@santafenm.gov)
Status:	Signed
Transaction ID:	CBJCHBCAABAAhzi69-TfuhrCTZ5ZMtKTWKEN9Z-a9J0O

"GB Subsurface CW Contract 3202777 Amend 2 Full Packet For Purchasing Budget FD Sig 11Nov2024" History

Document created by Kristy Miera (kamiera@santafenm.gov)
2024-11-12 - 5:31:21 PM GMT- IP address: 63.232.20.2

Document sent to ALEXIS LOTERO (aclotero@santafenm.gov) and ajhopkins@santafenm.gov ajhopkins@santafenm.gov (ajhopkins@santafenm.gov) for signature. One of them to sign
2024-11-12 - 5:32:28 PM GMT

Email viewed by ALEXIS LOTERO (aclotero@santafenm.gov)
2024-11-12 - 5:41:58 PM GMT- IP address: 104.47.64.254

Document e-signed by ALEXIS LOTERO (aclotero@santafenm.gov)
Signature Date: 2024-11-12 - 5:42:33 PM GMT - Time Source: server- IP address: 63.232.20.2

Agreement completed.
2024-11-12 - 5:42:33 PM GMT

Powered by Adobe Acrobat Sign

City of Santa Fe, New Mexico
Memorandum

DATE: January 29th, 2024

TO: Governing Body, Finance Committee and Public Works Committee

VIA: Regina Wheeler
Regina Wheeler, Public Works Director

FROM: Michael Dalmolin, PE, Traffic Operations Engineer

ACTION:
Request for Approval of Agreement for the Conversion of Streetlights with Public Service Company of New Mexico (PNM) for a Total Amount of $568,511, including NMGRT, to Convert Approximately 1,100 PNM-Owned Streetlights to LED Technology Meeting the City's Roadway Lighting Standards. (Michael Dalmolin, PE, Complete Streets Traffic Operations Engineering Supervisor; rdalmolin@santafenm.gov)

BACKGROUND AND SUMMARY:
Streetlights within the City of Santa Fe play a large role in improving roadway safety. In fact, the Federal Highway Administration (FHWA) estimates that street lighting reduces vehicle crashes at night between 33-38% for crashes at intersections and approximately 28% for injury crashes on roadways. The safety benefits of street lighting for vulnerable road users like pedestrians are even greater and is shown to reduce pedestrian injury crashes up to 42%.

The City of Santa Fe owns approximately 3,500 of the 5,550 streetlights in the City and PNM owns most of the remaining 2,000 streetlights in the City. A map of streetlights within the City is attached and shows the locations of City-Owned and PNM-owned streetlights. On February 24, 2021, the City's Governing Body approved a contract to convert City-owned streetlights to Light Emitting Diodes (LED) streetlight technology. In contrast to the existing High-Pressure Sodium (HPS) technology, LEDs reduce power consumption by 60%, have a much longer life span, improve streetlight reliability, are equipped with full cutoff fixtures protecting the night sky, and can be fit with shields to reduce fugitive light trespass out of the right-of-way. At the end of their life cycle, HPS technology is also considered hazardous waste due to the use of mercury and has special disposal requirements by the Environmental Protection Agency (EPA).

After the conversion contract was approved by Governing Body, the City undertook a several months long community-guided design process with the aim to balance meeting the appropriate lighting standards for streets while protecting the night sky and providing visual comfort. With support from the International Dark Sky Association, Governing Body adopted requirements for roadway luminaires in the attached Roadway Lighting Guidelines on May 26th, 2021, and set in motion a $2.900,000 contract to convert all 3,500 city-owned streetlights to LEDs meeting these new guidelines. Daikia Energy Solutions was awarded the contract and began the LED conversion of city-owned streetlights in October 2021. The conversion was completed in March 2022 and resulted in 2,563,000 kWh and $233,000 of energy savings within the first year. The new LED streetlights are performing with high reliability, and we have seen a significant decrease in complaints.

On April 14, 2021, the Governing Body approved a contract with PNM to convert the 2,000 PNM-owned streetlights to LEDs. PNM's streetlight program is governed by Rate 20 set by New Mexico's Public Regulation Commission (PRC) and the LEDs and equipment required by the Roadway Lighting Guidelines was not available in the PRC Rate 20 at the time of the contract. Thus, PNM undertook the regulatory process and achieved adding LEDs meeting the City's Roadway Lighting Guidelines into the "Approved Substitute" list in the Rate 20 Tariff approved for installation on PNM streetlights. Now that

these approved luminaires have been added to the "Approved Substitute" list, the City and PNM have reached a new agreement to proceed with some of the PNM-owned streetlights within the City.

PNM estimates approximately 1,100 streetlights, or about half of the PNM-owned lights within the City, will be converted with the contract amount of $568,511. Streetlights will be prioritized for conversion using a host of criteria, including if a streetlight has been reported as a nuisance, if the streetlight is important to roadway safety, and what type of streetlight will provide the greatest energy savings. The City currently pays PNM approximately $620,000 per year for electricity and maintenance of these streetlights based on current pricing in Rate 20. Based on the estimate provided by PNM, the energy and maintenance savings would be $135,000 per year and thus the project would pay for itself in approximately 4 years.

Phases of this project include PNM procurement, permitting, conversion and billing changes. The conversion phase of the project is estimated to take 6 months after issuance of the Purchase Order (PO) but could take up to a year in case of unforeseen circumstances. The remaining approximately 1,000 PNM owned streetlights will be converted incrementally using Public Works lighting budget through maintenance conversions unless another capital project is funded. The estimated amount of funding needed to complete the remaining fixtures is $500,000.

Public Engagement will include an Early Neighborhood Notification (ENN) planned for February and the project website, SantafeLED.com will provide information about the conversion and take feedback from the public. Constituents who provided emails during the first conversion will receive updates on the project and be invited to participate in the ENN meeting.

Procurement Method:
The procurement method is exempt from procurement since PNM, the local electric utility company, owns these lights and PRC regulations define the conversion by PNM.

Munis Contract:
Munis Contract # 3204540

Funding Source: Resource Conservation CIP / Debt Service and Lease Revenue Fund
Munis Funding Source/Number: CIP RESRCE - 315
Munis Org Name/Number: SOLAR CIP - 3159980 AH
Munis Object Name/Number: WIP CONSTRUCTION - 572970
Project ID: STREETLTS

ATTACHMENTS:
City of Santa Fe Streetlight Map
Agreement for the Conversion of Streetlights with Public Service Company of New Mexico
City of Santa Fe Roadway Lighting Guidelines
Dalkia City of Santa Fe October Report
Summary of Contracts
Procurement Checklist

Halona Crowe
Reviewed by Halona Crowe

DocuSign Envelope ID: 5CC028D8-C4C4-40B0-B28A-185D866C6585

AGREEMENT FOR THE CONVERSION OF STREETLIGHTS OWNED BY THE PUBLIC SERVICE COMPANY OF NEW MEXICO

This Agreement for the Conversion of Streetlights Owned by the Public Service Company of New Mexico ("Agreement") is made and entered into as of the last date of the parties' signatures below, by and between the Public Service Company of New Mexico ("PNM" or "Company"), a New Mexico Corporation, and the City of Santa Fe ("Santa Fe" or "City"), a municipal corporation (collectively, "Parties").

RECITALS

WHEREAS, PNM owns approximately 2057 streetlights located within the City of Santa Fe;

WHEREAS, the streetlights owned by the Company consist of legacy electric light generation methods, including, without limitation, incandescent, mercury vapor, and high pressure sodium lights;

WHEREAS, Santa Fe has asked PNM to complete a partial conversion of some the Company's streetlights into light-emitting diode ("LED") lights ("LED Streetlight Conversion Project");

WHEREAS, the City has formally approved the LED Streetlight Conversion Project and has also approved and set aside funding in the amount of Five Hundred and Twenty-Five Thousand and 00/100 Dollars ($525,000.00) to pay for the LED Streetlight Conversion Project;

WHEREAS, the current agreements and rate tariffs between PNM and Santa Fe that govern the provision of electricity to and maintenance of streetlights are as follows:

(i) Public Service Company of New Mexico Electric Services 17th Revised Rate No. 20 Canceling 16th Revised Rate No. 20 – Integrated System Streetlighting and Floodlighting Service (the "Rate Tariff);

(ii) Agreement for the Ongoing Incidental and Emergency Maintenance of the Street Lights Owned or Maintained by the City of Santa Fe executed in April of 2021;

WHEREAS, Santa Fe recognizes that the Rate Tariff may be changed through a future rate review proceeding before the New Mexico Public Regulation Commission and desires to proceed with the LED Conversion Project subject to costs that may be assessed by the Company in accordance with the terms and conditions of the Rate Tariff and this Agreement;

WHEREAS, the Company, acting in its capacity as a regulated public utility at all times material hereto, will complete the LED Conversion Project and shall charge Santa Fe for the

DocuSign Envelope ID: 5CC028D8-C4C4-40B0-B28A-185D866C6585

costs associated with the completion of the LED Conversion Project in accordance with the terms and conditions of the Rate Tariff and this Agreement; and

WHEREAS, the Parties desire to enter into this Agreement to set forth their respective rights and obligations arising from and related to this partial LED Conversion Project.

NOW THEREFORE, in consideration of the mutual terms, covenants, and conditions set forth in this Agreement, the Parties agree as follows:

AGREEMENT

1. PNM's Duties and Obligations.

a. PNM shall either contract with and pay third-party contractors or use its own crews to complete the LED Conversion Project.

b. PNM will direct its contractors or PNM crews to acquire the LED lights needed for the LED Conversion Project.

c. PNM will coordinate with its contractors or PNM crews to convert the streetlights identified by Santa Fe to LED lights by, among other things, providing to its contractors or PNM crews an LED Light Conversion Schedule that will help facilitate the timely completion of the LED Conversion Project.

d. PNM will endeavor to consider Santa Fe's input regarding the LED Light Conversion Schedule, which will set forth the different phases of the LED Conversion Project, organized by the neighborhoods where the partial conversion of Company-owned streetlights will occur.

e. PNM will direct its contractors or PNM crews to coordinate the appropriate disposal of the old streetlights which will be removed and converted during the LED Conversion Project.

f. PNM will make a good faith effort to complete the LED Conversion Project within twelve (12) months of the signing of this Agreement, although the Company cannot guarantee an exact date of completion, as such date is likely to fluctuate, and the City recognizes that the estimated timeline may change due to the lead time necessary for procuring fixtures from the manufacturer, which PNM currently estimates to be approximately 6 weeks.

g. PNM will charge Santa Fe for the costs associated with the completion of the LED Conversion Project on a monthly basis in accordance with the terms and conditions of the Rate Tariff and this Agreement.

h. PNM will charge to Santa Fe any depreciated value for those poles or lights that need to be permanently removed for this LED Conversion Project m

accordance with the terms and conditions of the Rate Tariff and this Agreement.

i. PNM will work with the City to communicate on a weekly basis regarding the status of the LED Conversion Project, such communication will include updates regarding what PNM-owned lights have been converted to LED.

j. PNM will change the rate to the appropriate Rate Tariff for each streetlight included in the LED Conversion Project after conversion in accordance with Applicable Law and provide the City with a rate change report in the form of **Schedule D** after the LED Conversion Project has been completed.

2. The Company's Work Limits. Notwithstanding anything to the contrary in this Agreement, PNM shall make a good faith effort to perform its duties and obligations hereunder but shall have no obligation to perform those duties or obligations to the extent that: (i) such duties or obligations would violate the work hours and limitations required by the Company's collective bargaining agreements, other union-related contracts or requirements, and procurement contracts with vendors; or (ii) PNM needs to reallocate personnel that would otherwise perform the duties and obligations to address emergencies or other system needs or outages, within and outside of New Mexico, arising from or related to PNM's electrical service obligations, in PNM's sole discretion.

3. Santa Fe's Duties and Obligations.

a. Santa Fe agrees to issue a Purchase Order to PNM in the amount of Five Hundred and Twenty Five Thousand and 00/100 Dollars ($525,000.00) including applicable GRT for the completion of the LED Conversion Project, which memorializes in writing Santa Fe's request that PNM convert certain Company-owned streetlights to LED lights within the City of Santa Fe in accordance with the Rate Tariff and this Agreement. PNM will share with Santa Fe certain information regarding Company-owned streetlights, if needed, so that Santa Fe can prepare the Purchase Order contemplated by this Agreement. Such information includes the number of Company-owned streetlights, the geographic location of Company-owned streetlights, and the types of Company-owned streetlights, categorized by light wattage. PNM will also provide Santa Fe with the cost of a conversion to an LED after a contractor has been selected by listing the cost per operational substitute on Appendix A.

b. Santa Fe agrees to include within the Purchase Order the following information: (i) the types of PNM-owned streetlights categorized by light wattage and the chosen operational substitute per Appendix A that Santa Fe wants the Company to convert to LED lights in connection with the LED Conversion Project and the light color and wattage for each chosen LED light. **Schedule "A"** to this Agreement provides a breakdown of PNM's existing streetlights, categorized by light type and light wattage, and lists the Company's installation allowance for each LED operational substitute, per the terms and conditions of the Rate Tariff and Appendix "A" thereto.

DocuSign Envelope ID: 5CC028D8-C4C4-40B0-B28A-185D866C6585

c. Santa Fe acknowledges and agrees that all Company-owned streetlights subject to the LED Conversion Project will be replaced with the approved LED operational substitutes listed in Appendix "A" to the Rate Tariff, and Santa Fe will identify exactly which operational substitutes the City has chosen for the conversion of Company-owned streetlights to LED lights. The operational substitutes chosen by the City shall be set forth on **Schedule "C"** to this Agreement. Santa Fe further acknowledges and agrees that it shall be responsible for all costs associated with the LED Conversion Project which exceed the installation allowances set forth in the Rate Tariff. Those costs include but are not limited to the actual costs incurred by PNM, the costs of additional material or equipment requested by the City, such as light shields, third party actuals, any applicable taxes, the cost of depreciated value in accordance with the language of the Rate Tariff, and the costs of PNM's loads.

d. Santa Fe agrees to pay the Company in accordance with the terms and conditions of the Rate Tariff and this Agreement.

e. The City shall provide PNM with a City Road Obstruction Permit upon application by PNM or its designated contractor.

4. Charges, Payment and Late Payments.

a. Subsection (I)(a) of the Rate Tariff states that, "[u]pon request from the Customer, the Company shall convert or install Company owned street lighting fixtures at its own expense up to the limits provided by the [Rate Tariff], with any remaining expenses being the responsibility of the Customer."

b. Subsection (III)(A)(l)(a) of the Rate Tariff states that, "the Customer shall pay all costs for ... [a]ny conversions of Company-owned Lights or Poles made at the request of the Customer, subject to the allowances set forth in [the Rate Tariff]. "

c. Article V of the Rate Tariff allows PNM to recover "payment of the Company's depreciated investment for any lamp and/or pole associated with the removal of any Company owned lighting facilities."

d. The Parties agree that Subsections (I)(a) and (III)(A)(l)(a) of the Rate Tariff allow PNM to charge Santa Fe for all costs of the LED Conversion Project which exceed the allowances set forth in the Rate Tariff.

e. The Parties further agree that PNM shall charge Santa Fe for the costs of the LED Conversion Project which exceed the allowances set forth in the Rate Tariff and the costs associated with the Company's depreciated investment in accordance with the terms and conditions of the Rate Tariff.

f. Santa Fe agrees to pay PNM for all costs associated with the LED

Conversion Project which exceed the allowances set forth in the Rate Tariff. Those costs include but are not limited to the actual costs incurred by PNM, the costs of additional material or equipment requested by the City, such as light shields, third party actuals, any applicable taxes, the cost of depreciated value in accordance with the language of the Rate Tariff, and the costs of PNM's loads. Santa Fe has approved and set aside Five Hundred and Twenty Five Thousand and 00/100 Dollars ($525,000.00) for the completion of the partial LED Conversion Project, which will include conversion by PNM of some of the Company's streetlights as specified by Santa Fe. The exact number of lights converted under the partial LED Conversion Project will depend on the costs of the conversion and the City's available funding.

g. All billing invoices submitted by PNM against Santa Fe's Purchase Order shall be paid by Santa Fe within forty-five (45) days after the date of receipt of the applicable invoice, unless Santa Fe reasonably and in good faith disputes any invoiced amounts billed against the Purchase Order in accordance with the terms set forth in Section 5 (the "Disputed Amounts"). for Disputed Amounts, any amounts not paid after the 75th day following the date of receipt of the applicable invoice will bear interest at the annual rate of 8% or the highest rate allowed by law, whichever is lower, from such date to the date of full payment.

5. Payment Disputes. If Santa Fe disputes any invoiced amount for PNM's performance of the services contemplated herein, Santa Fe must give notice to PNM by the date that such invoiced amount is due and payable in accordance with Section 4(h), setting forth in reasonable detail the basis for the dispute. Upon Santa Fe timely giving notice of any Disputed Amount, the Parties shall refrain from pursuing any other rights or remedies at law or in equity with respect to such Disputed Amount until all commercially reasonable efforts to resolve such Disputed Amounts in accordance with Section 27 are pursued.

6. Taxes. If gross receipts taxes are payable with respect to the duties and obligations performed by PNM hereunder, Santa Fe will be responsible for reimbursing the Company for those gross receipts taxes.

7. Santa Fe's Representations and Warranties. Santa Fe represents and warrants to PNM that the following statements are true and correct as of the Effective Date of this Agreement:

a. There is no pending or threatened, suit, action, litigation, or proceeding against or affecting Santa Fe that affects the validity or enforceability of this Agreement.

b. Santa Fe is not in violation of any law promulgated or judgment entered into by any governmental authority that individually or in the aggregate would affect its performance of any of its obligations under this Agreement.

c. The execution and delivery of this Agreement, the consummation of the

DocuSign Envelope ID: 5CC028D8-C4C4-40B0-B28A-185D866C8585

transactions contemplated herein, and Santa Fe's compliance with the terms and provisions hereof will not conflict with or result in a breach of, or require any consent under, Santa Fe's charter or other organizational documents, any law or regulation, or any order, injunction, or decree.

d. To the best of Santa Fe's knowledge, the information provided by Santa Fe relating to this Agreement and the LED Conversion Project is true, correct, and complete in every material respect and contains no untrue statement of material fact and does not omit a material fact that would otherwise make its statements contained in this Agreement misleading.

8. Term; Termination; Effect of Termination.

a. Term. Provided that this Agreement is not terminated earlier in accordance with the terms set forth in Section 8hereof, the Term of this Agreement will be for twelve (12) months beginning on the Effective Date or until the completion of the LED Conversion Project, whichever occurs earlier (the "Term"). The 12-month Term does not modify or otherwise extend the City's obligation to timely pay PNM within 45 days after the date of receipt of PNM's billing invoices, as set forth in Section 4 of this Agreement.

b. Termination.

i. Termination for Convenience. Santa Fe may terminate this Agreement at any time during the Term for convenience by providing no less than 90 days ' prior written notice to PNM.

ii. Termination for Cause by Santa Fe. Santa Fe may terminate this Agreement immediately upon written notice to PNM upon the occurrence of any of the following circumstances:

A. PNM becoming insolvent or being unable to pay its debts in the ordinary course of its business; PNM filing a voluntary petition under applicable bankruptcy or other insolvency laws; a receiver being appointed for the business affairs of PNM; any bankruptcy, reorganization, debt arrangement or other proceeding under any bankruptcy or other insolvency law being instituted against PNM that is not dismissed within forty-five (45) days thereafter; PNM making an assignment for the benefit of creditors; or PNM liquidating or ceasing to do business as a going concern;

B. A material breach of this Agreement by PNM and such breach not being cured, to Santa Fe's reasonable satisfaction, within thirty (30) days following notice thereof;

C. The failure of PNM to comply with applicable law in all material respects with regard to its obligations under this Agreement, and such failure not being cured within thirty (30) days following notice thereof; or

D. The failure of PNM to maintain the insurance requirements set forth in Section 20.

iii. Termination for Cause by PNM. PNM may terminate this Agreement pursuant to this Section 8(b)(iii) immediately upon written notice to Santa Fe upon the occurrence of any of the following circumstances:

A. Santa Fe becoming insolvent or being unable to pay its debts in the ordinary course; Santa Fe filing a voluntary petition under applicable bankruptcy or other insolvency laws; or any bankruptcy, reorganization, debt arrangement or other proceeding under any bankruptcy or other insolvency law being instituted against Santa Fe that is not dismissed within forty-five (45) days thereafter;

B. A material breach of this Agreement by Santa Fe and such breach not being cured, to PNM's reasonable satisfaction, within thirty (30) days following notice thereof; or

C. The failure of Santa Fe to comply with applicable law in all material respects with respect to its respective obligations under this Agreement, and such failure not being cured within thirty (30) days following notice thereof.

c. Effect of Termination of Expiration. Upon the termination or expiration of this Agreement, (i) PNM shall discontinue the performance of all of its duties and obligations under this Agreement and shall prepare and deliver a final invoice for all amounts accrued for tasks performed that have not yet been invoiced to Santa Fe, (ii) and Santa Fe shall promptly pay PNM all unpaid amounts owed and not disputed under this Agreement within thirty (30) days after the later of the effective date of termination or the date of the final invoice, (iii) each party shall either return or destroy (at the other party's election) the other party's Confidential Information (as such term is defined below), (iv) if either party is in default under this Agreement, the non-defaulting party may exercise any other remedies available at law or in equity, all of which will be cumulative, and (v) Sections 3, 4, 9, 10, and 14 will survive.

9. Confidentiality.

a. Definition. "Confidential Information" means information or materials provided by one party ("Discloser") to another party ("Recipient") which are in tangible form and labeled "confidential" or the like, or, information which a reasonable person

knew or should have known to be confidential.

b. Protection. Recipient may use Confidential Information of Discloser solely (A) to exercise its rights and perform its obligations under this Agreement; or (B) in connection with the parties' ongoing business relationship. Recipient will not use or disclose any Confidential Information of Discloser for any purpose not expressly permitted by this Agreement, and will disclose the Confidential Information of Discloser only to the employees or contractors of Recipient who have a need to know such Confidential Information for purposes of this Agreement and who are under a duty of confidentiality no less restrictive than Recipient's duty hereunder. Recipient will protect Confidential Information from unauthorized use, access, or disclosure in the same manner as Recipient protects its own confidential or proprietary Information of a similar nature but with no less than reasonable care.

c. Exceptions. Recipient's obligations under Section 10 with respect to any Confidential Information will terminate if Recipient can show by written records that such information: (A) was already known to Recipient at the time of disclosure by Discloser; (B) was disclosed to Recipient by a third party who had the right to make such disclosure without any confidentiality restrictions; (C) is, or through no fault of Recipient has become, generally available to the public; or (D) was independently developed by Recipient without access to, or use of, Discloser's Confidential Information. In addition, Recipient will be allowed to disclose Confidential Information to the extent that such disclosure is required by law or by the order of a court or similar judicial or administrative body, provided that Recipient notifies Discloser of such required disclosure promptly and in writing and cooperates with Discloser, at Discloser's request and expense, in any lawful action to contest or limit the scope of such required disclosure.

10. Hazardous Materials. PNM shall have no responsibility for detection, abatement, remediation, removal or disposal of any substance, material, waste, gas or particulate matter, hazardous substance, pollutant or contamination that is regulated, listed, or identified under any law or that becomes regulated, listed, or identified under any law (collectively, "Hazardous Materials"), except for any Hazardous Materials furnished or used by PNM in connection with the performance of the Company's duties and obligations hereunder.

11. Regulatory Reporting and Cooperation. The parties acknowledge that PNM is regulated by the New Mexico Public Regulation Commission and may be regulated by other governmental agencies including the Federal Energy Regulatory Commission, and that PNM may have certain reporting requirements related to the Company's duties and obligations hereunder. Santa Fe shall maintain detailed and accurate records of the costs and activities related to the performance of its obligations under this Agreement and shall provide such records, together with such other information or documents related to the LED Conversion Project as may be reasonably requested by PNM promptly upon request by PNM to the extent required in a regulatory proceeding. Santa Fe shall take such further actions and execute such further documents or instruments as may be reasonably requested by PNM that are reasonably related to PNM's regulatory compliance obligations with respect to the Company's duties and obligations hereunder.

DocuSign Envelope ID: 5CC028D8-C4C4-40B0-B28A-185D866C6585

12. Subcontractors. PNM may use subcontractors in the performance of the Company's obligations under this Agreement.

13. Inspection of Public Records. PNM acknowledges that, if a request for inspection of records under the New Mexico Inspection of Public Records Act (Sections 14-2-1 et seq., NMSA 1978) ("Act") is received for materials relating to this Agreement, and provided that such materials are not exempt under the Act ("Exempted Materials"), Santa Fe is required to disclose those records. Santa Fe shall make a good faith effort to determine what materials are Exempted Materials and to not disclose Exempted Materials. Santa Fe shall, unless prohibited under the Act, provide PNM with immediate notice before any disclosure to allow PNM an opportunity, within the Act's fifteen-day deadline, to initiate legal action to prevent the release of trade secret, proprietary data, or confidential data, or any other materials that to a reasonable person could be considered Exempted Materials, should PNM wish to do so. Notwithstanding anything to the contrary herein, with the exception of the Exempted Materials, Santa Fe shall not be responsible to PNM for any lawful disclosure of records required by the Act or an order of a court or other tribunal with jurisdiction over Santa Fe.

14. Joint Preparation. This Agreement shall be deemed to be jointly prepared. No provision in this Agreement shall be interpreted for or against any party because that party or its counsel drafted such provisions.

15. Time of Performance. This Agreement shall commence upon PNM beginning the work contemplated herein. PNM will endeavor to complete the LED Conversion Project within twelve (12) months of the signing of this Agreement, although the exact date of completion may fluctuate. If PNM requires more time to complete the work described herein, the parties will seek to amend this Agreement pursuant to section 21 herein. PNM shall notify the City as soon as possible and no later than sixty (60) days prior to expiration of this Agreement if it believes the work is not likely to be completed during the original twelve (12) month term of this Agreement.

16. Authorized Representatives. Each party shall designate and shall have designated at all times one representative authorized to act and administer this Agreement of behalf of the designating party (each, an "Authorized Representative") and shall provide to the other party and update, if necessary, the name, address, telephone number, e-mail address, facsimile, and any other pertinent contact information (collectively, "Contact information") for its Authorized Representative. A party may replace its Authorized Representative by written notice to the other party. If a party desires to designate any additional authorized representatives, it shall specify the nature of the communications for which each such representative is authorized to act on the designating party's behalf. The contact information for each of the Parties' current authorized representatives is set forth on Schedule "B" to this Agreement. Neither party's Authorized Representative shall have any authority to amend, modify, or waive this Agreement or any provision hereof, but the Authorized Representatives may provide information where expressly specified herein or to the extent reasonably necessary for the parties' respective performance of their obligations hereunder.

DocuSign Envelope ID: 5CC028D8-C4C4-40B0-B28A-185D866C8585

17. Appropriations. The City of Santa Fe has appropriated $525,000 for the completion of the LED Conversion Project. The terms of this Agreement, and any orders placed under it, are contingent upon sufficient appropriations and authorization being made by the Governing Body for the performance of this Agreement. If sufficient appropriations and authorization are not made by the Governing Body, this Agreement, and any orders placed under it, shall terminate upon written notice being given by the City to the Contractor. The City's decision as to whether sufficient appropriations are available shall be accepted by the Contractor and shall be final. If the City t unilaterally reduces funding, PNM shall have the option to terminate this Agreement within thirty (30) days of the notice of reduction in funding. The City shall remain responsible for prompt and full payment of all amounts due and owing prior to termination of this Agreement.

18. Independent Contractor. Neither PNM nor its employees are considered to be employees of Santa Fe for any purpose whatsoever. PNM is considered to be an independent contractor at all times in the performance of the services contemplated under this Agreement. PNM further agrees that neither it nor its employees are entitled to any benefits from Santa Fe under the provisions of the Workers' Compensation Act of the State of New Mexico, or to any of the benefits granted to employees of Santa Fe under the provisions of any merit system ordinance that may be now or hereinafter enacted or amended.

19. Insurance. Each party shall purchase and maintain insurance in accordance with such party's own internal policies and procedures. Each party shall provide proof of such insurance and renewals thereof upon request by the other party.

20. Compliance with Laws. Both parties shall comply with all applicable laws, ordinances, and codes of the Federal, State, and local governments in connection with the performance of their respective duties and obligations under this Agreement.

21. Amendments. Any amendments to this Agreement shall be in writing and mutually agreed upon by the Parties.

22. Construction and Severability. If any part of this Agreement is held to be invalid or unenforceable, such holding will not affect the validity or enforceability of any other part of this Agreement so long as the remainder of the Agreement is reasonably capable of completion.

23. Entire Agreement; Order of Precedence. This Agreement, including the Rate Tariff referenced above which has been incorporated herein by reference, contains the entire Agreement of the Parties relevant to the LED to Conversion Project and supersedes any and all other agreements or understandings, oral or written, whether previous to the execution hereof or contemporaneous herewith. In the event of any conflict between the terms of this Agreement and the Rate Tariff, the Rate Tariff will control.

24. Applicable Law. This Agreement shall be governed by and construed and enforced in accordance with the laws of the State of New Mexico.

25. Venue. The parties agree that the courts of the State of New Mexico sitting in Santa Fe County, New Mexico, will have exclusive jurisdiction to hear any action or judicial proceedings with respect to this Agreement. The parties each agree not to raise any objection to venue or any defense of inconvenient forum to any action or judicial proceedings brought by the other party or arising in connection with this Agreement brought in the aforementioned courts.

26. Dispute Resolution. If any question, dispute, difference, or claim arises out of or in connection with this Agreement, including any question regarding its existence, validity, performance, or termination (a "Dispute"), then either party may provide written notice to the other together with a sufficiently detailed explanation of the notifying party's position with respect to the Dispute, and the Authorized Representatives of the parties shall meet promptly and shall diligently attempt in good faith to resolve the Dispute for a period of not more than five days (the "Initial Meeting"). If the Authorized Representatives are unable to resolve such Dispute during the Initial Meeting, then each party shall designate one agent authorized to bind such party or with settlement authority, and such designated agents shall meet within ten days following the end of the Initial Meeting, or at a time mutually agreed upon by the Authorized Representatives, to attempt in good faith to resolve the Dispute and produce written terms of settlement for the Dispute (a "Settlement Agreement"). A Settlement Agreement executed by each designated agent shall serve as conclusive evidence of the resolution of such Dispute. the designated agents do not produce and execute the Settlement Agreement within twenty days after the date of the first meeting of the designated agents or within a longer period agreed to by each designated agent, then either party may, upon written notice to the other party, pursue all of its rights and remedies provided at law or in equity or otherwise in this Agreement.

27. Waiver of Jury Trial. Each party hereby waives, to the fullest extent permitted by applicable law, any right it may have to a trial by jury in respect of any proceeding brought to enforce or interpret this Agreement. Each party acknowledges that it and the other party have been induced to enter this Agreement by, among other things, the mutual waivers and certifications in this Section.

28. Force Majeure. PNM shall not be considered to be in default in respect to any obligation hereunder, if delays in or failure of performance shall be due to Force Majeure. The term "Force Majeure" shall mean any cause beyond the control of the Company and not due to its fault or negligence, including, but not limited to, acts of God, flood, earthquake, storm, fire, lightning, epidemic, pandemic, war, terrorist activity, riot, civil disturbance, sabotage, inability to obtain permits, licenses, and authorizations from any local, state, tribal
, or federal agency for any of the materials, supplies, equipment, or services required to be provided hereunder, fuel shortages, strikes or other labor disputes, delay associated with lack of skilled labor or resources in Santa Fe County, or restraint by court or public authority, any of which by exercise of due foresight PNM could not reasonably have been expected to avoid, and which by the exercise of due diligence it is unable to overcome. PNM shall not, however, be relieved of liability for failure of performance if such failure is due to removable or

DocuSign Envelope ID: 5CC028D8-C4C4-40B0-B28A-185D866C6585

remediable causes which it fails to remove or remedy with reasonable dispatch. Nothing contained herein, however, shall be construed to require PNM to prevent or settle a strike or other labor disputes against its will. The Party whose performance hereunder is so affected shall immediately notify the other Party of all pertinent facts and take all reasonable steps to promptly and diligently prevent such causes if feasible to do so, or to minimize or eliminate the effect thereof without delay. Santa Fe shall make no claim against PNM and hereby waives, releases and discharges any and all claims against the Company for additional compensation or Damages by reason of any delay or additional services due to a Force Majeure.

29. No Waiver. Nothing in this Agreement shall be construed as a waiver of either Party's legal rights, unless expressly addressed herein. Each party expressly reserves any legal rights and remedies to the extent that this Agreement is silent on a particular point.

30. Notices. Unless this Agreement specifically requires otherwise, any notice, demand, or request provided for herein or served, given, or made as contemplated hereby must be in writing and either (i) delivered in person, (ii) sent by email, (iii) sent by certified United States mail, postage prepaid, or (iv) sent by a nationally recognized overnight courier service that provides a receipt of delivery, in each case, to the other party's Authorized Representative. Notice given by personal delivery, mail, or overnight courier pursuant to this Section is effective upon receipt (or refusal of delivery) by the other party's Authorized Representative. Notice given by email pursuant to this Section is effective if sent to the email address of the other party's Authorized Representative that is set forth on **Schedule "B,"** regardless of acknowledgement of receipt.

31. Relationship of the Parties. Nothing contained in this Agreement will be construed in any manner as creating an agency, partnership, joint venture or any other type of relationship between PNM and Santa Fe. Neither party will have, nor will such party hold itself out as having, any authority whatsoever, whether express or implied, to assume, create, or incur any obligation or liability whatsoever, contractual or otherwise, on behalf of or in the name of the other party or to bind the other party in any other manner whatsoever.

32. Construction. The headings of the Sections of this Agreement are for convenience and are not to be used in interpreting this Agreement. As used in this Agreement, the word "including" means "including, without limitation."

33. New Mexico Tort Claims Act. Any liability in tort incurred by the City of Santa Fe in connection with this Agreement is subject to the immunities and limitations of the New Mexico Tort Claims Act, Section 41-4-1, et. seq. NMSA 1978, as amended. The City and its "public employees" as defined in the New Mexico Tort Claims Act, do not waive sovereign immunity, do not waive any defense and do not waive any limitation of liability pursuant to law. No provision in this Agreement modifies or waives any provision of the New Mexico Tort Claims Act.

IN WITNESS WHEREOF, Santa Fe and PNM have executed this Agreement as of the date first written above.

CITY OF SANTA FE

By: Alan Webber (Feb 29, 2024 15:17 MST)

Alan Webber
Mayor, City of Santa Fe, New Mexico

Attest:

Geralyn Cardenas (Feb 29, 2024 15:43 MST)

Geralyn Cardenas, Interim City Clerk
GB MTG 02/28/24 XIV

City Attorney's Office:

Marcos Martinez
Marcos Martinez (Jan 12, 2024 13:36 MST)

Senior Assistant City Attorney

Approved for Finances:

Emily K. Oster
Emily K. Oster (Feb 15, 2024 17:35 MST)

Emily Oster, Finance Director

PUBLIC SERVICE COMPANY OF NEW MEXICO

By: DocuSigned by: 2/14/2024
80E1D44E9B1C4E0...

Mike Mertz
PNM Vice President, New Mexico Operations

DocuSign Envelope ID: 5CC028D8-C4C4-40B0-B28A-185D866C6585

SCHEDULE "A"

AGREEMENT FOR THE CONVERSION OF STREETLIGHTS OWNED BY THE PUBLIC SERVICE COMPANY OF NEWMEXICO

PNM's Existing Streetlights by Wattage	Units of Street-lights by Wattage	Installation Allowances in 17th Revised Rate No.20	LED Operational Substitutes Per Appendix A to 17th Revised Rate No. 20
IOOWHPS	983	$160.00	**Operational Substitute No. 1** ATBS PIO MVOLT R2 NL P7 XL, 40W, 4000K ERL1 0 05B3 40 AGRAY, 39W, 4000K VERD-C016-D-U-T2-4N7-10MSP-AP,39W, 4000K ATBS PIO MVOLT R2 3K NL P7 XL, 40W, 3000K ERL1 0 05B3 30 A GRAY, 39W, 3000K VERD-C016-D-U-T2-7030-4N7-10MSP-AP, 39W, 3000K ATBS P10 MVOLT R2 27K XL NL P7 VR RFD321303, 40W, 2700K ERL1 0 05B5 27 A GRAY, 37W, 2700K VERD-C016-D-U-T2-8027-4N7-10MSP-AP, 39W, 2700K
250WHPS	161	$480.00	**Operational Substitute No. 2** ATBM P30 MVOLT R3 NL XL P7, 118W, 4000K ERL2 0 16C3 40 A GRAY, 120W, 4000K VERD-C02H-D-U-T3-4N7-10MSP-AP, 120W, 4000K ATBM P30 MVOLT R3 3K NL XL P7, 118W, 3000K ERL2 0 16C3 30 A GRAY, 120W, 3000K VERD-C02H-D-U-T3-7030-4N7-10MSP-AP, 120W, 3000K ATBM P30 480 R3 NL P7 XL, 118W, 4000K
400W HPS	62	$1,040.00	**Operational Substitute No. 3** ATBL F MVOLT R3 NL P7, 259W, 4000K ERL2 0 28C3 40 AGRAY, 251W, 4000K VERDM-A04-D-U-T3-4N7-10MSP-AP, 247W, 4000K ATBL FM VOLT R3 3K NL P7, 259W, 3000K ERL2 0 28C3 30 AGRAY, 251W, 3000K VERDM-A04-D-U-T3-7030-4N7-10MSP-AP, 247W, 3000K ATBL F 480 R3 NL P7 XL, 259W, 4000K

DocuSign Envelope ID: 5CC028D8-C4C4-40B0-B28A-185D866C6585

175W MV	838	$160.00	**Operational Substitute No. 1** ATBS PIO MVOLT R2 NL P7 XL, 40W, 4000K ERL1 0 05B3 40 AGRA Y, 39W, 4000K VERD-CO 16-D-U-T2-4N7- 10MSP-AP,39W, 4000K ATBS PIO MVOLT R2 3K NL P7 XL, 40W, 3000K ERL1 0 05B3 30 A GRAY, 39W, 3000K VERD-C016-D-U-T2-7030-4N7-10MSP-AP, 39W, 3000K ATBS P10 MVOLT R2 27K XL NL P7 VR RFD321303, 40W, 2700K ERL1 0 05B5 27 A GRAY, 37W, 2700K VERD-C016-D-U-T2-8027-4N7-10MSP-AP, 39W, 2700K

DocuSign Envelope ID: 5CC028D8-C4C4-40B0-B28A-185D866C6585

400WMV	13	$480.00	**Operational Substitute No. 2** ATBM P30 MVOLT R3 NL XL P7, 118W, 4000K ERL2 0 16C3 40 A GRAY, 120W, 4000K VERD-C02H-D-U-T3-4N7-10MSP-AP, 120W, 4000K ATBM P30 MVOLT R3 3K NL XL P7, 118W, 3000K ERL2 0 16C3 30 A GRAY, 120W, 3000K VERD-C02H-D-U-T3-7030-4N7-10MSP-AP, 120W, 3000K ATBM P30 480 R3 NL P7 XL, 118W, 4000K

DocuSign Envelope ID: 5CC028D8-C4C4-40B0-B28A-185D866C6585

SCHEDULE "B"

Authorized Representatives

The Contact Information for the Authorized Representatives is initially as follows:

Public Service Company of New Mexico

Sharon Martinez
Large Construction Project Manager,
NMOPS Projects and Program Management
2401 Aztec NE
MSZ200
Albuquerque, New Mexico 87107
sharon.martinez@pnm.com
505-241-4515office
505-238-5409 cell

Manuel Quintana
Senior Strategic Account Manager
PNM Account Management
414 Silver Ave. SW
Albuquerque, NM 87102
Manuel.quintana@pnm.com
505-241-4716 office
505-249-3105

City of Santa Fe, New Mexico

Regina Wheeler,
Public Works Director
PO Box 909
500 Market St. Suite 200
Santa Fe, New Mexico 87504-0909
(505) 955-6622

DocuSign Envelope ID: 5CC028D8-C4C4-40B0-B28A-185D866C6585

Schedule C
City of Santa Fe Specified Operational Substitutes

City of Santa Fe Specified Operational Substitutes				
PNM's Existing Streetlights by Wattage	Units of PNM's Streetlights by Wattage	Number of Lights Subject to Conversion and Light Type	Installation Allowances in 17th Revised Rate No.20	City Specified LED Operational Substitutes Per Appendix A to 17th Revised Rate No. 20
100WHPS	983		$160.00	ATBS P10 MVOLT R2 27K XL NL P7 VR RFD321303, 40W, 2700K
250WHPS	161		$480.00	ATBM P30 MVOLT R3 3K NL XL P7, 118W, 3000K
400WHPS	62		$1,040.00	ATBL FM VOLT R3 3K NL P7, 259W, 3000K
175WMV	838		$160.00	ATBS P10 MVOLT R2 27K XL NL P7 VR RFD321303, 40W, 2700K
400WMV	13		$480.00	ATBM P30 MVOLT R3 3K NL XL P7, 118W, 3000K

City of Santa Fe
New Development
Roadway Lighting Guidelines

Rev 1.0 February 2023

SUMMARY

1. Roadway luminaires must meet the following requirements:

Roadway Type	Correlated Color Temperature (Kelvin)	Input Wattage Range (W)	Nominal Lumen Output (lumen) +/- 10%	Minimum Color Rendering Index	IES Distribution	Visual Comfort Refractor	IES TM-15 Backlight, Uplight, and Glare Rating		
							B	U	G
Residential	2700K	28-45	4,000	70	Type 2	Required	1	0	1
Local/Collector	3000K	90-100	8,900	70	Type 2 or Type 3	Required	2	0	2
Major	3000K	190-200	20,000	70	Type 2 or Type 3	Not required	3	0	3

Luminaires must be fitted with a Ubicquia Ubicell control. Full specifications are in Appendix B.

2. Pole and arm composition varies by area in the City of Santa Fe. To expedite approval, seek recommendations based on proposed construction location from the City's street lighting maintenance provider, Dalkia Energy Solutions.

3. Submit a package with the following components
   a. Plans indicating the location, type, and height of both building and ground mounted luminaires; and
   b. Specification sheets for proposed luminaires, arms, poles, foundations, supports, shielding devices, and smart controls; and
   c. Photometric data: provide photometric showing footcandles on the ground or luminaire .ies files with .dwg of proposed layouts. (Examples included in Appendix A)

Submit package to City Traffic Engineer and the City's street lighting maintenance provider, Dalkia Energy Solutions. A response will be provided within five business days.

Jeanne Wolfenbarger <jawolfenbarger@santafenm.gov>
Matt O'Brien <matt.obrien@dalkiasolutions.com>

Appendix A:

EXAMPLE ROADWAY PHOTOMETRICS

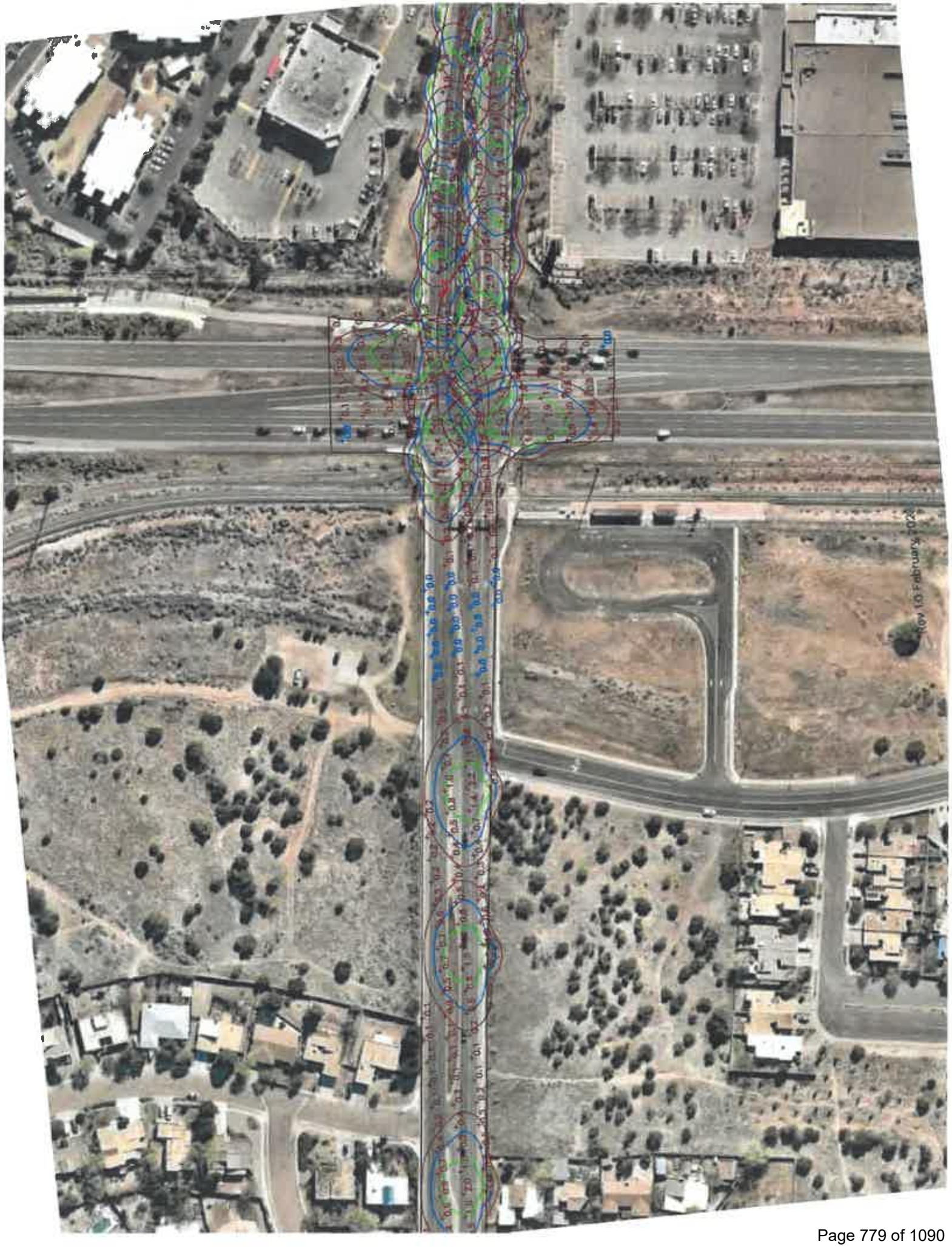



Current View

Appendix B:

COMMUNITY-GUIDED SMART STREET LIGHTING DESIGN SPECIFICATIONS

Rev 1.0 February 2023

City of Santa Fe

Department of Public Works

Community-Guided Smart Street Lighting Design Specifications

The City of Santa Fe seeks to convert its existing street lighting assets to smart LED technology in order to "reduce light pollution, reduce or prevent glare, reduce or prevent light trespass, conserve energy, promote a sense of safety and security, and ensure aesthetically appropriate outdoor lighting in keeping with the character of Santa Fe." - (City of Santa Fe Ord. No. 2011-37 § 10)

Following the Community-Guided Design phase outlined in its Global Management Contract with Dalkia, the Department of Public Works is recommending to the Governing Body the smart lighting design summarized in the below table and described with detailed specifications in the following pages.

Roadway Type	Correlated Color Temperature (Kelvin)	Input Wattage Range (W)	Nominal Lumen Output (lumen) +/- 10%	Minimum Color Rendering Index	IES Distribution	Visual Comfort Refractor	IES TM-15 Backlight, Uplight, and Glare Rating		
							B	U	G
Residential	2700K	28-45	4,000	70	Type 2	Required	1	0	1
Local/Collector	3000K	90-100	8,900	70	Type 2 or Type 3	Required	2	0	2
Major	3000K	190-200	20,000	70	Type 2 or Type 3	Not required	3	0	3

Roadway Type	Number of Fixtures	Percentage of Total
Residential	3,137	58%
Local/Collector	1,578	29%
Major	697	13%

In order to develop this Community-Guided Smart Lighting Design Plan, Dalkia worked with multiple stakeholders, including PNM, and compiled various sets of data; evaluated various products and performed a comprehensive set of photometric analyses; gathered community feedback from multiple channels; and combined all analyses into this recommendation. The final plan is designed to be actionable and to provide results in line with the Sustainable Santa Fe 25-Year Plan and the City of Santa Fe's expectations. The City of Santa Fe and Dalkia will work together to develop a dimming strategy to further increase energy savings and dark-sky protection, aligned with dark-sky best practices.

Part A: STREET LIGHTING LIGHT EMITTING DIODE (LED) LUMINAIRE SPECIFICATIONS

1.0 REFERENCES

The publications listed below form a part of this specification to the extent referenced. Publications are referenced within the text by their basic designation only. Versions listed shall be superseded by updated versions as they become available.

1.1 American National Standards Institute (ANSI)
- A. C136.2 (Most current), American National Standard for Roadway and Area Lighting Equipment—Luminaire Voltage Classification
- B. C136.10-2010 (Most current), American National Standard for Roadway and Area Lighting Equipment Locking-Type Photocontrol Devices and Mating Receptacle Physical and Electrical Interchangeability and Testing
- C. C136.15-2011 (Most current), American National Standard for Roadway and Area Lighting Equipment Luminaire Field Identification
- D. C136.25-2009 (Most current), American National Standard for Roadway and Area Lighting Equipment Ingress Protection (Resistance to Dust, Solid Objects and Moisture) for Luminaire Enclosures
- E. C136.31-2010 (Most current), American National Standard for Roadway Lighting Equipment – Luminaire Vibration.
- F. C136.41

1.2 American Society for Testing and Materials International (ASTM)
- A. B117-09 (Most current), Standard Practice for Operating Salt Spray (Fog) Apparatus
- B. D1654-08 (Most current), Standard Test Method for Evaluation of Painted or Coated Specimens Subjected to Corrosive Environments
- C. D523-08 (Most current), Standard Test Method for Specular Gloss
- D. G154-06 (Most current), Standard Practice for Operating Fluorescent Light Apparatus for UV Exposure of Nonmetallic Materials

1.3 Council of the European Union (EC)
- A. RoHS Directive 2002/95/EC, on the restriction of the use of certain hazardous substances in electrical and electronic equipment

1.4 Illuminating Engineering Society of North America (IESNA or IES)
- A. DG-4-03 (Most current), Design Guide for Roadway Lighting Maintenance
- B. HB-10-11 (Most current), IES Lighting Handbook, 10th Edition
- C. LM-50-99 (Most current), IESNA Guide for Photometric Measurement of Roadway Lighting Installations
- D. LM-61-06 (Most current), IESNA Approved Guide for Identifying Operating Factors Influencing Measured Vs. Predicted Performance for Installed Outdoor High Intensity Discharge (HID) Luminaires
- E. LM-79-08 (Most current), IESNA Approved Method for the Electrical and Photometric Measurements of Solid-Sate Lighting Products
- F. LM-80-08 (Most current), IESNA Approved Method for Measuring Lumen Maintenance of LED Light Sources
- G. RP-8-18 (Most current), ANSI / IESNA American National Standard Practice for Roadway Lighting

H. RP-16-10 (Most current), ANSI/IES Nomenclature and Definitions for Illuminating Engineering
I. TM-3-95 (Most current), A Discussion of Appendix E - "Classification of Luminaire Lighting Distribution," from ANSI/IESNA RP-8-83
J. TM-15-11 (Most current), Luminaire Classification System for Outdoor Luminaires
K. TM-21-11 (Most current), Projecting Long Term Lumen Maintenance of LED Light Sources

1.5 National Electrical Manufacturers Association (NEMA)
A. ANSI/NEMA/ANSLG C78.377-2008 (or latest), American National Standard for the Chromaticity of Solid State Lighting Products

1.6 National Fire Protection Association (NFPA)
A. 70 – National Electrical Code (NEC)

1.7 Underwriters Laboratories (UL)
A. 1449, Surge Protective Devices
B. 1598, Luminaires.
C. 8750, Light Emitting Diode (LED) Equipment for Use in Lighting Products LED Roadway Specification

1.8 CSA
1. 1598, Luminaires

2.0 GENERAL CONSTRUCTION

2.1 Shall be compliant with CSA C22.2 No. 250.0-08 – UL 1598 Harmonized Std.
2.2 Luminaire housing to be fabricated from die cast aluminum low copper content alloy.
A. Luminaire housing to act as passive heat sink for LED Array.
B. Housing to be designed in such a manner that debris build-up with-in "heat-fin" structure will not significantly impact lamp lumen depreciation (LLD).
C. Luminaire finish and casting to be tested to ASTM B117 salt fog, and must maintain a scribe creepage rating of 8 per ASTM D1654 after 5000 hours.
D. Access to electrical compartment shall be tool-less by means of a thumb screw.
E. Tool-less access should accommodate user wearing electrical gloves.

2.3 LED light engine
A. Shall be IP66 rated (provide 0% uplight and restrict backlight to within sidewalk depth).
B. Lens shall be created from borosilicate glass.

2.4 Luminaire Attachment
A. Luminaire shall be able to attach to 1 ¼" and/or 2" IPS schedule 40 mast arms (1 5/8" to 2 3/8" OD).
B. Luminaire shall be designed to be able to tilt +/- 5 degrees from horizontal.
C. Luminaire shall be designed to withstand 3G vibration testing prescribed in ANSI C136.31.
D. Luminaire shall include internal integral leveling bubble to assist in the installation.

2.5 Luminaire Markings
A. Shall have external wattage label affixed on underside of luminaire to be seen from ground per ANSI C136.15.
B. Luminaire shall have internal label indicating manufacturer's name, product name, input voltage and date of manufacture.

2.6 Wildlife shield shall be a cast in feature (not a separate component).

3.0 ELECTRICAL

3.1 All electrical components shall be terminated through the use of quick disconnect couplings.

- A. There shall not be any wire nuts supplied in the luminaire
- B. All luminaires shall be equipped with a 3 station tunnel style terminal block for terminating supply wire.
  1. Terminal block shall accommodate up to 6 AWG conductors.
  2. For ease of installation, the terminal block shall be positioned in such a manner that supply wires do not need to bent or re-routed around components to make electrical termination.
- C. Luminaire shall provide means to protect LED driver and LED lighting array from electrical transients caused by electrical storms or capacitor switching by means of surge protection device.
  1. Surge Protection Device (SPD) shall be UL1449 recognized.
  2. SPD shall be 3 wire and provide both common and differential mode protection.
  3. SPD must have an inductive filter circuit that reduces the amount of energy passed thru to electronics during a surge event.
  4. Surge protection device shall be rated to protect the luminaire up to 10kV/5kA combination wave surges in accordance with ANSI C136.2 (Most Current).
  5. Surge protection shall be thermally fused.
  6. Failure mode of surge protection is to leave luminaire off.
- D. LED Driver shall meet the following minimum requirements
  1. LED Driver shall have a minimum power factor of 90% at full load.
  2. LED Driver THD shall be less than 20% at full load.
  3. LED Driver shall comply with the requirements of UL, CSA, FCC47 subpart 15
  4. LED Driver maximum case temperature shall not be exceeded when luminaire is operating in a 40C ambient.
  5. LED Driver shall be RoHS compliant
  6. LED Driver shall have in ingress protection rating IP66.
- E. Photocontrol receptacle shall comply with ANSI C136.10 for standard 7 PIN configurations. When using smart controls receptacle shall comply with ANSI C136.41.

4.0 LIFE

4.1 Component rated life shall be a minimum of 20 years (or 100,000 hours) when operating in a continuous 25C ambient.

4.2 The design life of the LED array (based on LM80/TM21) shall be defined as L80 at 98,000 hours operation in an ambient of 25C.

5.0 WARRANTY

5.1 Luminaire shall be warranted to be free from manufacturing defects for a minimum period of 10 years.

6.0 LED LUMINAIRE PERFORMANCE

6.1 Residential Roadway LED Luminaires

- A. Correlated Color Temperature (CCT) shall be nominally rated at 2700 Kelvin CCT.
- B. Luminaire input wattage shall be between 28 watts and 45 watts.

C. Luminaire nominal lumen output shall be between 4000 lumens and 5000 lumens.
D. Minimum Color Rendering Index (CRI) shall be 70.
E. Luminaire shall have a distribution pattern consistent with IES RP-8-18 Type II Distribution.
F. Luminaire shall have a maximum BUG rating per IES TM-15 of B1-U0-G1.
G. Product shall have a visual comfort glare reduction refractor.

6.2 Local/Collector Roadway LED Luminaires

A. Correlated Color Temperature (CCT) shall be nominally rated at 3000 Kelvin CCT.
B. Luminaire input wattage shall be between 90 watts and 120 watts.
C. Luminaire nominal lumen output shall be between 8000 lumens and 12000 lumens.
D. Minimum Color Rendering Index (CRI) shall be 70.
E. Luminaire shall have a distribution pattern consistent with IES RP-8-18 Type II or Type III Distribution.
F. Luminaire shall have a maximum BUG rating per IES TM-15 of B2-U0-G2.
G. Product shall have a visual comfort glare reduction refractor.

6.3 Major Roadway LED Luminaires

A. Correlated Color Temperature (CCT) shall be nominally rated at 3000 Kelvin CCT.
B. Luminaire input wattage shall be between 190 watts and 260 watts.
C. Luminaire nominal lumen output shall be between 20000 lumens and 24000 lumens.
D. Minimum Color Rendering Index (CRI) shall be 70.
E. Luminaire shall have a distribution pattern consistent with IES RP-8-18 Type II or Type III Distribution.
F. Luminaire shall have a BUG rating per IES TM-15 of B3-U0-G3.
G. Product shall be Design Lights Consortium (DLC) qualified.

Part 2: SMART CONTROLS

One of the use-cases for smart controls technology on the city's street lighting infrastructure is dimming capability. Dimming control will allow luminaires to be adjusted as an additional mechanism to increase energy savings and dark-sky protection.

7.0 Smart Node Technology

- 7.1 Node shall have twist-lock controller compatibility with 3, 5 or 7 pin NEMA socket receptacle.
- 7.2 Node shall utilize AES 128/256-bit encryption in its communication security.
- 7.3 Node shall function with a 0-10V, DALI or DALI2 driver and will provide a dimming circuit with a range of 0% to 100%.
- 7.4 Node shall have a single SKU to handle both low voltage and high voltage.
- 7.5 Node shall have a minimum of 10KV/5KA power surge protection and a single power supply range for 90V to 506V line voltage.
- 7.6 Node shall have a minimum IP66 rating to withstand harsh weather conditions with a -30C to +70C (-22F to +158F) operating temperature range.
- 7.7 Node shall utilize LTE CAT-1 cellular communication per module and provide advanced lighting and IoT functions and services to include, but not limited to, Tilt, Scheduling, Dynamic Dimming, Asset Management, GPS, Outage Notification, Traffic Trends, Beaconing, and Utility Grade Power Metering accuracy of ANSI C12.20 Class + or - 0.5.
- 7.8 Node must have a 10-year warranty and include 10 years of Software as a Service and connectivity.

Appendix C:

EXISTING CITY EQUIPMENT SPECIFICATIONS SHEETS

LUMINAIRE
SPECIFICATIONS SHEETS

Autobahn Series ATBS
Roadway & Security Lighting

Consistent with LEED® goals & Green Globes™ criteria for light pollution reduction

PRODUCT OVERVIEW

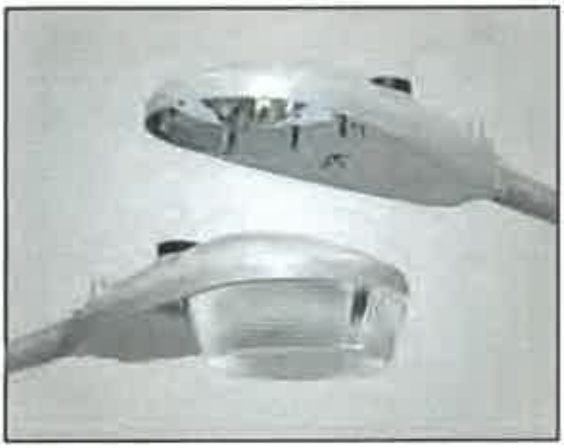

Applications:

- Residential streets
- Parking lots
- General security lighting

DIMENSIONS

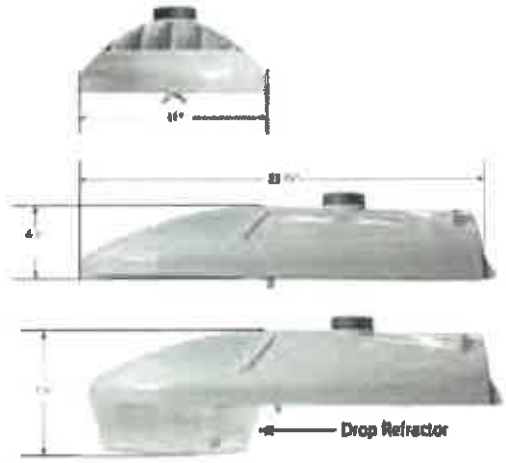

Effective Projected Area (EPA) The EPA for the ATBS is 0.3 sq. ft.
Approx. Wt. = 12 lbs. (5 kg)

STANDARDS

DesignLights Consortium® (DLC) qualified product. Not all versions of this product may be DLC qualified. Please check the DLC Qualified Products List at www.designlights.org/QPL to confirm which versions are qualified.

Color temperatures of ≤ 3000K must be specified for International Dark-Sky Association certification.

Rated for -40°C to 40°C ambient
CSA Certified to U.S. and Canadian standards
Complies with ANSI: C136.2, C136.10, C136.14, C136.31, C136.15, C136.37

Features:

OPTICAL

Same Light: Performance is comparable to 100W – 200W HPS and up to 175W Mercury Vapor roadway and security lighting luminaires.

White Light: Correlated color temperature - 4000K, 70 CRI minimum, 3000K, 70 CRI minimum or optional 5000K, 70 CRI minimum.

IP66 rated borosilicate glass optics ensure longevity and minimize dirt depreciation. Unique IP66 rated LED light engines provide 0% uplight and restrict backlight to within sidewalk depth, providing optimal application coverage and optimal pole spacing.

Available distributions are Type II, III, and V roadway distributions. When used with the optional acrylic refractor the unit provides approximately 10% uplight and increased vertical foot-candles

ELECTRICAL

Expected Life: LED light engines are rated >100,000 hours at 25°C, L70. Electronic driver has an expected life of 100,000 hours at a 25°C ambient.

Lower Energy: Saves an expected 40-60% over comparable HID luminaires.

Standard surge protection is 20kV/10kA "Extreme Level" per ANSI C136.2. An optional MOV pack provides 10kV/5kA "Enhanced Level".

MECHANICAL

Includes standard AEL lineman-friendly features such as tool-less entry, 3 station terminal block and quick disconnects. Bubble level located inside the electrical compartment for easy leveling at installation.

Rugged die-cast aluminum housing and door are polyester powder-coated for durability and corrosion resistance. Rigorous five-stage pre-treating and painting process yields a finish that achieves a scribe creepage rating of 8 (per ASTM D1654) after over 5000 hours exposure to salt fog chamber (operated per ASTM B117).

Mast arm mount is adjustable for arms from 1-1/4" to 2" (1-5/8" to 2-3/8" O.D.) diameter. The 2 – bolt clamping mechanism provides 3G vibration rating per ANSI C136.31.

The Wildlife shield is cast into the housing (not a separate piece).

CONTROLS

NEMA 3 pin photocontrol receptacle is standard, with the Acuity designed ANSI standard 7 pin receptacles optionally available.

Premium solid state locking-style photocontrol – PCSS (10 year rated life) Extreme long life solid state locking-style photocontrol – PCL1 (20 year rated life)

Optional onboard Adjustable Output module allows the light output and input wattage to be modified to meet site specific requirements, and also can allow a single fixture to be flexibly applied in many different applications.

Note: Actual performance may differ as a result of end-user environment and application. Specifications subject to change without notice.

© 2014-2021 Acuity Brands Lighting, Inc. Rev. 04/08/21 ATBS

Rev 1.0 February 2023

AEL American Electric Lighting

Autobahn Series ATBS
Roadway & Security Lighting

ORDERING INFORMATION

Series	Performance Packages	Voltage	Optics
ATBS Autobahn LED Roadway & Security	**P10** 5,500 lumens **P20** 6,800 lumens **P30** 8,300 lumens **P40** 9,400 lumens **P50** 10,800 lumens **P60**[4] 11,850 lumens	**MVOLT** Multi-volt, 120-277V **347** 347V **480** 480V	**R2** Roadway Type II **R3** Roadway Type III **R5** Roadway Type V **D3** Type III, Drop Refractor included **D5** Type V, Drop Refractor included

Options

Color Temperature (CCT)
- **(Blank)** 4000K CCT, 70 CRI Min.
- **3K** 3000K CCT, 70 CRI Min.
- **5K** 5000K CCT, 70 CRI Min.

Paint
- **Blank** Gray (Standard)
- **BK** Black
- **WH** White
- **BZ** Bronze

Surge Protection
- **Blank** Standard 20kV/10kA SPD
- **MP** MOV Pack 10kV/5kA

Misc.
- **HS** House Side Shield
- **NL** NEMA Label
- **XL** Not CSA Certified
- **VR**[3] Visual Comfort Optic
- **UMR-XX** 8" Horizontal Arm for Round Pole, Painted to match Fixture
- **UMS-XX** 8" Horizontal Arm for Square Pole, Painted to match Fixture
- **UMR-GALV** 8" Horizontal Arm for Round Pole, Painted to match Fixture
- **UMS-GALV** 8" Horizontal Arm for Square Pole, Painted to match Fixture

Controls
- **(Blank)** 3 Pin NEMA Photocontrol Receptacle
- **NR**[1] No Photocontrol Receptacle
- **DMF**[2] 0V-10V Dimmable Driver
- **P7** 7 Pin Photocontrol Receptacle (dimmable driver included)
- **PCSS**[1] DTL DSS Photocontrol
- **PCL1**[1] DTL DLL Photocontrol 120-277V
- **AO** Field Adjustable Output
- **SH** Shorting Cap

Packages
- **(Blank)** Standard Pack
- **JP** Job Pack (54/pallet)

Install Packages
- **PKSS** DTL DSS Photocontrol
- **PKGL** DTL DLL Photocontrol

Packages ship with selected photocontrol, 24", 1 ¼" diameter arm, 5' of prewire and mounting hardware

Accessories
- **ATBSREF** Drop Refractor for field installation
- **ATBSHSS** House Side Shield for field installation
- **ATBSLTS** Light Trespass Shield for field installation
- **ATBS LOUVER KIT** Louver Kit for field installation
- **ATBSVR-XX** Visual Comfort Refractor and painted skirt for field installation

Notes
1. Not available with Install Packages.
2. Not available with AO option.
3. Not available with D3 or D5 option.
4. Not available with 347V and 480V supply voltage options.

© 2014-2021 Acuity Brands Lighting, Inc. All Rights Reserved. Rev. 04/08/21

Warranty Five-year limited warranty. Complete warranty terms located at: www.acuitybrands.com/support/customer-support/terms-and-conditions
Actual performance may differ as a result of end-user environment and application.
All values are design or typical values, measured under laboratory conditions at 25 °C.
Specifications subject to change without notice.

Please contact your sales representative for the latest product information.

PERFORMANCE PACKAGE

ATBS

Performance Package	Distribution	Input Watts	3K (3000K CCT, 70 CRI)					4K/5K (4000K/5000K CCT, 70 CRI)					LLD @ 25°C		
			Lumens	LPW	B	U	G	Lumens	LPW	B	U	G	50k Hours	75k Hours	100k Hours
P10	R2	40	5,360	134	1	0	2	5,577	139	1	0	2	0.92	0.89	0.85
	R3		5,287	132	1	0	1	5,524	138	1	0	1			
	R5		5,576	139	3	0	1	5,758	144	3	0	1			
	D3		4,963	124	1	3	3	5,163	129	1	3	3			
	D5		5,372	134	2	3	3	5,590	140	2	3	3			
P20	R2	50	6,707	134	1	0	2	6,909	138	1	0	2	0.92	0.89	0.85
	R3		6,667	134	2	0	2	6,760	135	2	0	2			
	R5		6,926	139	3	0	1	7,106	142	3	0	1			
	D3		6,496	130	2	3	4	6,244	125	1	3	4			
	D5		7,032	141	3	4	4	7,217	146	3	4	4			
P30	R2	60	8,092	135	2	0	2	8,067	134	1	0	1	0.92	0.89	0.85
	R3		7,971	133	2	0	2	8,328	139	2	0	2			
	R5		8,470	141	3	0	2	8,760	146	3	0	2			
	D3		7,491	125	2	3	4	7,795	130	2	3	4			
	D5		8,110	135	3	4	4	8,438	141	3	4	4			
P40	R2	70	9,138	131	2	0	2	9,533	136	2	0	2	0.92	0.89	0.85
	R3		9,136	131	2	0	2	9,355	134	2	0	2			
	R5		9,868	141	3	0	2	9,710	139	3	0	2			
	D3		8,460	121	2	3	4	8,802	126	2	3	5			
	D5		9,158	131	3	4	5	9,529	136	3	4	5			
P50	R2	82	10,628	130	2	0	3	10,829	132	2	0	3	0.92	0.89	0.85
	R3		10,624	130	2	0	2	10,826	132	2	0	2			
	R5		11,450	140	4	0	2	11,161	136	4	0	2			
	D3		10,143	124	2	4	5	10,553	129	2	4	5			
	D5		10,651	130	3	4	5	11,082	135	3	4	5			
P60	R2	92	11,050	120	2	0	3	11,848	129	2	0	3	0.92	0.89	0.85
	R3		10,911	119	2	0	2	11,862	129	2	0	2			
	R5		12,199	133	4	0	2	12,756	139	4	0	2			
	D3		10,230	111	2	4	5	10,644	116	2	4	5			
	D5		11,074	120	3	4	5	11,523	125	3	4	5			

ATBS with VR

Performance Package	Distribution	Input Watts	3K (3000K CCT, 70 CRI)					4K/5K (4000K/5000K CCT, 70 CRI)					LLD @ 25°C		
			Lumens	LPW	B	U	G	Lumens	LPW	B	U	G	50k Hours	75k Hours	100k Hours
P10	R2 with VR	40	4,450	111	1	0	1	4,561	114	1	0	1	0.92	0.89	0.85
	R3 with VR		4,273	107	1	0	1	4,605	115	1	0	1			
	R5 with VR		4,539	113	2	0	1	4,679	117	2	0	1			
P20	R2 with VR	50	5,491	110	1	0	1	5,550	111	1	0	1	0.92	0.89	0.85
	R3 with VR		5,379	108	1	0	1	5,582	112	2	0	1			
	R5 with VR		5,647	113	2	0	1	5,682	114	2	0	1			
P30	R2 with VR	60	6,479	108	2	0	1	6,530	109	2	0	1	0.92	0.89	0.85
	R3 with VR		6,400	107	2	0	1	6,564	109	2	0	1			
	R5 with VR		6,703	112	3	0	1	6,693	112	2	0	1			
P40	R2 with VR	70	7,307	104	2	0	1	7,561	108	2	0	1	0.92	0.89	0.85
	R3 with VR		7,347	105	2	0	1	7,638	109	2	0	1			
	R5 with VR		7,693	110	3	0	1	7,749	111	3	0	1			
P50	R2 with VR	82	8,552	104	2	0	2	8,711	106	2	0	2	0.92	0.89	0.85
	R3 with VR		8,494	104	2	0	1	8,814	107	2	0	1			
	R5 with VR		8,895	108	3	0	1	8,911	109	3	0	1			
P60	R2 with VR	92	8,999	98	2	0	2	9,815	107	2	0	2	0.92	0.89	0.85
	R3 with VR		8,899	97	2	0	1	9,857	107	2	0	2			
	R5 with VR		9,309	101	3	0	1	10,256	111	3	0	1			

Note: Individual fixture performance may vary. Specifications subject to change without notice.

© 2014-2021 Acuity Brands Lighting, Inc. All Rights Reserved.

Warranty Five-year limited warranty. Complete warranty terms located at: www.acuitybrands.com/support/customer-support/terms-and-conditions
Actual performance may differ as a result of end-user environment and application.
All values are design or typical values, measured under laboratory conditions at 25 °C.
Specifications subject to change without notice.

Please contact your sales representative for the latest product information.

UMR POLE ADAPTOR

RECOMMENDED FOR USE WITH POLES OF 4" DIAMETER OR SMALLER

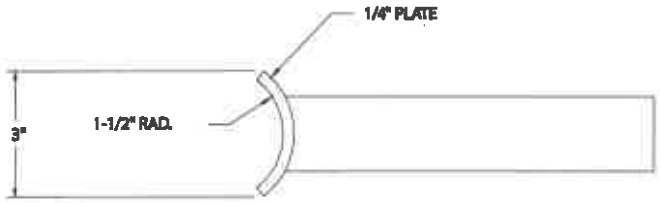

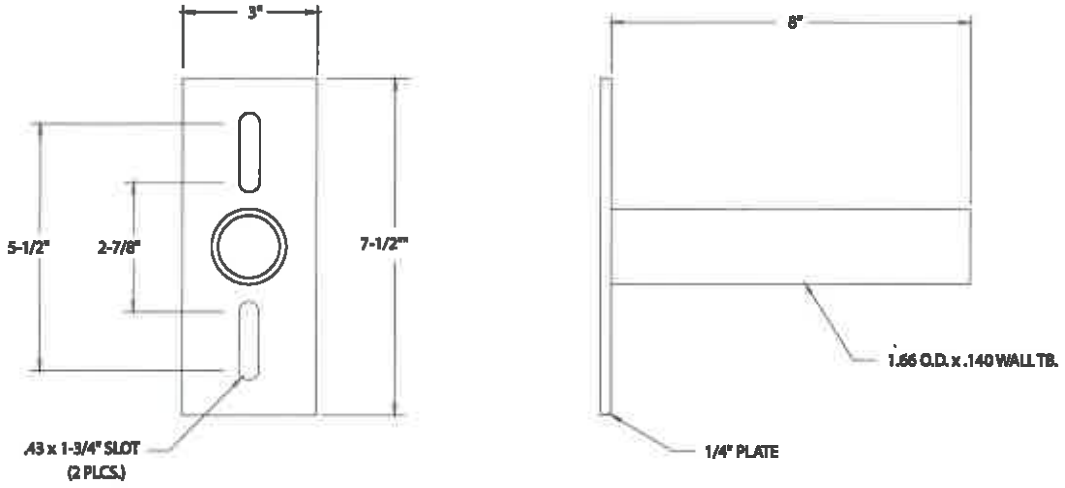

UMS POLE ADAPTOR

© 2014-2021 Acuity Brands Lighting, Inc. All Rights Reserved.

Warranty Five-year limited warranty. Complete warranty terms located at:
www.acuitybrands.com/support/customer-support/terms-and-conditions
Actual performance may differ as a result of end-user environment and application.
All values are design or typical values, measured under laboratory conditions at 25 °C.
Specifications subject to change without notice.

Please contact your sales representative for the latest product information.

Autobahn Series ATBM
Roadway

Consistent with LEED® goals & Green Globes™ criteria for light pollution reduction

PRODUCT OVERVIEW



Applications:

- Residential streets
- Parking lots
- High speed roadways

DIMENSIONS

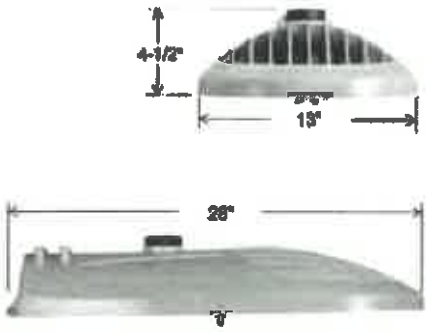

Effective Projected Area (EPA)
The EPA for the ATBM is 0.3 sq. ft.,
Approx. Wt. = 21 lbs. (9.5 kg)

STANDARDS

Color temperatures of ≤ 3000K must be specified for International Dark-Sky Association certification.

Rated for -40°C to 40°C ambient
CSA Certified to U.S. and Canadian standards
Complies with ANSI: C136.2, C136.10, C136.14, C136.31, C136.15, C136.37

Features:

OPTICAL

Same Light: Performance is comparable to 150W – 250W HPS

White Light: Correlated color temperature - 4000K, 70 CRI minimum, 3000K, 70 CRI minimum or optional 5000K, 70 CRI minimum.

IP66 rated borosilicate glass optics ensure longevity and minimize dirt depreciation. Unique IP66 rated LED light engines provide 0% uplight and restrict backlight to within sidewalk depth, providing optimal application coverage and optimal pole spacing.

Available distributions are Type II, III, IV, & V roadway distributions.

DualOptix™ visual comfort option is also available for all distributions.

ELECTRICAL

Expected Life: LED light engines are rated >100,000 hours at 25°C, L70. Electronic driver has an expected life of 100,000 hours at a 25°C ambient.

Lower Energy: Saves an expected 40-60% over comparable HID luminaires.

Robust Surge Protection: Standard surge protection is 20kV/10kA "Extreme Level" per ANSI C136.2. An optional MOV pack provides 10kV/5kA "Enhanced Level.

MECHANICAL

Includes standard AEL lineman-friendly features such as tool-less entry, 3 station terminal block and quick disconnects. Bubble level located inside the electrical compartment for easy leveling at installation.

Rugged die-cast aluminum housing and door are polyester powder-coated for durability and corrosion resistance. Rigorous five-stage pre-treating and painting process yields a finish that achieves a scribe creepage rating of 8 (per ASTM D1654) after over 5000 hours exposure to salt fog chamber (operated per ASTM B117).

Mast arm mount is adjustable for arms from 1-1/4" to 2" (1-5/8" to 2-3/8" O.D.) diameter. The 2 – bolt and optional 4 bolt clamping mechanism provide 3G vibration rating per ANSI C136.31.

The Wildlife shield is cast into the housing (not a separate piece).

CONTROLS

NEMA 3 pin photocontrol receptacle is standard, with the Acuity designed ANSI standard 7 pin receptacle optionally available.

Premium solid state locking-style photocontrol – PCSS (10 year rated life) Extreme long life solid state locking-style photocontrol – PCL1 (20 year rated life).

Extreme long life solid state locking-style photocontrol with on demand remote on/off control – PCCC (15 year rated life).

Optional onboard Adjustable Output module allows the light output and input wattage to be modified to meet site specific requirements, and also can allow a single fixture to be flexibly applied in many different applications.

ORDERING INFORMATION

Series	Performance Packages	Voltage	Optics	Mounting
ATBM Autobahn LED Roadway	**P05** 9,700 lumens **P10** 11,000 lumens **P20** 12,800 lumens **P30** 15,500 lumens **P40** 17,400 lumens **P50** 18,700 lumens **P60** 20,000 lumens **P70** 21,500 lumens	**MVOLT** Multi-volt, 120-277V **347** 347V **480** 480V	**R2** Roadway Type II **R3** Roadway Type III **R4** Roadway Type IV **R5** Roadway Type V	**(Blank)** 2 Bolt Mounting **4B** 4 Bolt Mounting

Options

Color Temperature (CCT)
- **(Blank)** 4000K CCT, 70 CRI Min.
- **3K** 3000K CCT, 70 CRI Min.
- **5K** 5000K CCT, 70 CRI Min.

Paint
- **(Blank)** Gray
- **BK** Black
- **BZ** Bronze
- **DDB** Dark Bronze
- **GI** Graphite
- **WH** White

Surge Protection
- **(Blank)** Standard 20kV/10kA SPD
- **MP** MOV Pack

Miscellaneous Options
- **HSS** House Side Shield
- **NL** NEMA Label Indicating Wattage
- **XL** Not CSA Certified – No Terminal Block Cover
- **VR**[5] Dual Optix visual comfort
- **UMR-XX** 8" Horizontal Arm for Round Pole, Painted to match Fixture
- **UMS-XX** 8" Horizontal Arm for Square Pole, Painted to match Fixture
- **UMR-GALV** 8" Horizontal Arm for Round Pole, Galvanized
- **UMS-GALV** 8" Horizontal Arm for Square Pole, Galvanized

Control Options
- **(Blank)** 3 Pin NEMA Photocontrol Receptacle
- **P7** 7 Pin Photocontrol Receptacle (dimmable driver included) [1]
- **NR** No Photocontrol Receptacle
- **AO** Field Adjustable Output [2]
- **DM** 0-10V Dimmable Driver [2]
- **PCSS** Solid-State Lighting Photocontrol [4]
- **PCLL** Solid-State Long Life Photocontrol
- **PCCC** Solid-State Long Life Photocontrol with remote control on/off [4]
- **SH** Shorting Cap

Packages
- **(Blank)** Standard Pack
- **JP** Job Pack (36/pallet)

Accessories
- **ATBMHSS** House Side Shield
- **ATBMLTS** Light Trespass Shield
- **RKATBMMVOLTSPD** ATBM Acuity SPD, MVOLT
- **RKATBMHVSPD** ATBM Acuity SPD, 347/480V
- **RKATBMMVOLTMP** ATBM MOV Pack, MVOLT
- **RKATBMHVMP** ATBM MOV Pack, 347/480V

Notes:
1. Dimmable Driver included. Not available with DM or NR.
2. Controls by others. Not available with P7 or AO.
3. Not available with DM.
4. MVOLT only.
5. VR option does not provide zero uplight performance.

© 2014-2021 Acuity Brands Lighting, Inc. All Rights Reserved. 03/10/21

Warranty Five-year limited warranty. Complete warranty terms located at: www.acuitybrands.com/support/warranty/terms-and-conditions
Actual performance may differ as a result of end-user environment and application.
Specifications subject to change without notice.

Please contact your sales representative for the latest product information.

PERFORMANCE PACKAGE

Performance Package	Distribution	Input Watts	3K (3000K CCT, 70 CRI)					4K/5K (4000K/5000K CCT, 70 CRI)					LLD @ 25°C		
			Lumens	LPW	B	U	G	Lumens	LPW	B	U	G	25k Hours	75k Hours	100k Hours
P05	R2	68	9,396	138	1	0	2	9,718	143	1	0	2	0.93	0.86	0.83
	R3		9,366	138	1	0	3	9,688	142	1	0	3			
	R4		9,030	133	1	0	3	9,340	137	1	0	3			
	R5		10,334	152	3	0	2	10,689	157	3	0	2			
P10	R2	81	10,635	131	2	0	3	11,299	139	2	0	3	0.93	0.86	0.83
	R3		10,675	132	2	0	3	11,382	140	2	0	3			
	R4		10,391	128	2	0	4	10,894	136	2	0	4			
	R5		11,504	142	3	0	2	12,086	149	3	0	2			
P20	R2	94	12,073	128	2	0	3	12,874	137	2	0	3	0.93	0.86	0.83
	R3		12,065	128	2	0	3	12,818	136	2	0	3			
	R4		11,948	127	2	0	4	12,525	133	2	0	4			
	R5		13,085	139	4	0	2	13,776	147	4	0	2			
P30	R2	118	14,637	124	2	0	3	15,514	131	2	0	3	0.93	0.86	0.83
	R3		14,631	124	2	0	3	15,452	131	2	0	3			
	R4		14,317	121	2	0	4	15,151	128	2	0	5			
	R5		15,775	134	4	0	2	16,685	141	4	0	2			
P40	R2	135	16,233	120	2	0	3	17,493	130	2	0	3	0.93	0.86	0.83
	R3		16,402	121	2	0	3	17,367	129	2	0	3			
	R4		15,911	118	2	0	5	17,008	126	2	0	5			
	R5		17,507	130	4	0	2	18,596	138	4	0	2			
P50	R2	152	17,541	115	2	0	3	18,748	123	2	0	3	0.93	0.86	0.83
	R3		17,677	116	2	0	4	18,712	123	2	0	4			
	R4		17,154	113	2	0	5	18,246	120	2	0	5			
	R5		19,008	125	4	0	2	20,088	132	4	0	2			
P60	R2	168	18,770	112	2	0	3	20,095	120	3	0	3	0.93	0.86	0.83
	R3		18,830	112	2	0	4	20,094	120	3	0	4			
	R4		18,365	109	2	0	5	19,648	117	2	0	5			
	R5		20,350	121	4	0	2	21,505	128	4	0	2			
P70	R2	190	20,190	106	3	0	3	21,585	114	3	0	3	0.93	0.86	0.83
	R3		20,142	106	3	0	4	21,504	113	3	0	4			
	R4		19,660	103	2	0	5	21,024	111	3	0	5			
	R5		21,988	116	4	0	2	23,076	121	4	0	2			

Note: Individual fixture performance may vary. Specifications subject to change without notice.

© 2014-2021 Acuity Brands Lighting, Inc. All Rights Reserved. 03/10/21

Warranty Five-year limited warranty. Complete warranty terms located at:
www.acuitybrands.com/support/warranty/terms-and-conditions
Actual performance may differ as a result of end-user environment and application.
Specifications subject to change without notice.

Please contact your sales representative for the latest product information.

PERFORMANCE PACKAGE

ATBM with DualOptix	Distribution	Input Watts	3000K					4000K/5000K					LDD @ 25°C		
			Lumens	LPW	B	U	G	Lumens	LPW	B	U	G	50k Hours	75k Hours	100k Hours
P05	R2 with VR	68	8,923	122	2	3	3	8,609	127	2	3	3	0.93	0.88	0.83
	R3 with VR		8,296	122	2	3	3	8,581	126	2	3	3			
	R4 with VR		7,998	118	2	3	4	8,273	122	2	3	4			
	R5 with VR		9,164	135	3	3	3	9,468	139	3	3	3			
P10	R2 with VR	81	9,421	116	2	3	3	10,009	124	2	3	3	0.93	0.88	0.83
	R3 with VR		9,456	117	2	3	4	10,012	124	2	3	4			
	R4 with VR		9,204	114	2	3	4	9,738	120	2	3	4			
	R5 with VR		10,191	126	3	3	3	10,706	132	3	3	3			
P20	R2 with VR	94	10,694	114	2	3	4	11,404	121	2	3	4	0.93	0.88	0.83
	R3 with VR		10,687	114	2	3	4	11,354	121	2	3	4			
	R4 with VR		10,581	113	2	3	5	11,094	118	2	3	5			
	R5 with VR		11,591	123	3	3	3	12,203	130	3	3	3			
P30	R2 with VR	118	12,988	110	2	3	4	13,742	116	2	3	4	0.93	0.88	0.83
	R3 with VR		12,980	110	2	3	4	13,687	116	2	3	5			
	R4 with VR		12,681	107	2	3	5	13,420	114	2	3	5			
	R5 with VR		13,974	118	3	3	3	14,780	125	3	3	3			
P40	R2 with VR	135	14,379	107	2	3	4	15,495	115	3	3	5	0.93	0.88	0.83
	R3 with VR		14,529	108	2	3	5	15,384	114	3	3	5			
	R4 with VR		14,093	104	2	3	5	15,066	112	3	3	5			
	R5 with VR		15,508	115	3	3	3	16,471	122	4	3	3			
P50	R2 with VR	152	15,538	102	3	3	5	16,607	109	3	3	5	0.93	0.88	0.83
	R3 with VR		15,858	103	3	3	5	16,575	109	3	3	5			
	R4 with VR		15,195	100	3	3	5	16,162	106	3	3	5			
	R5 with VR		16,837	111	4	3	3	17,794	117	4	3	4			
P60	R2 with VR	168	16,828	99	3	3	5	17,800	106	3	3	5	0.93	0.88	0.83
	R3 with VR		16,679	99	3	3	5	17,799	106	3	3	5			
	R4 with VR		16,271	97	3	3	5	17,404	104	3	3	5			
	R5 with VR		18,026	107	4	3	4	19,049	113	4	3	4			
P70	R2 with VR	190	17,884	94	3	3	5	19,102	101	3	3	5	0.93	0.88	0.83
	R3 with VR		17,842	94	3	3	5	19,048	100	3	3	5			
	R4 with VR		17,415	92	3	3	5	18,623	98	3	3	5			
	R5 with VR		19,477	103	4	3	4	20,440	108	4	3	4			

© 2014-2021 Acuity Brands Lighting, Inc. All Rights Reserved. 03/10/21

Warranty Five-year limited warranty. Complete warranty terms located at: www.acuitybrands.com/support/warranty/terms-and-conditions
Actual performance may differ as a result of end-user environment and application.
Specifications subject to change without notice.

Please contact your sales representative for the latest product information.

UMR POLE ADAPTOR

RECOMMENDED FOR USE WITH POLES OF 4" DIAMETER OR SMALLER

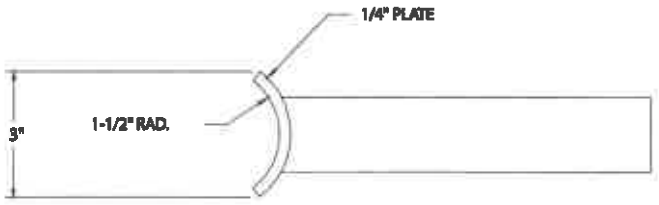

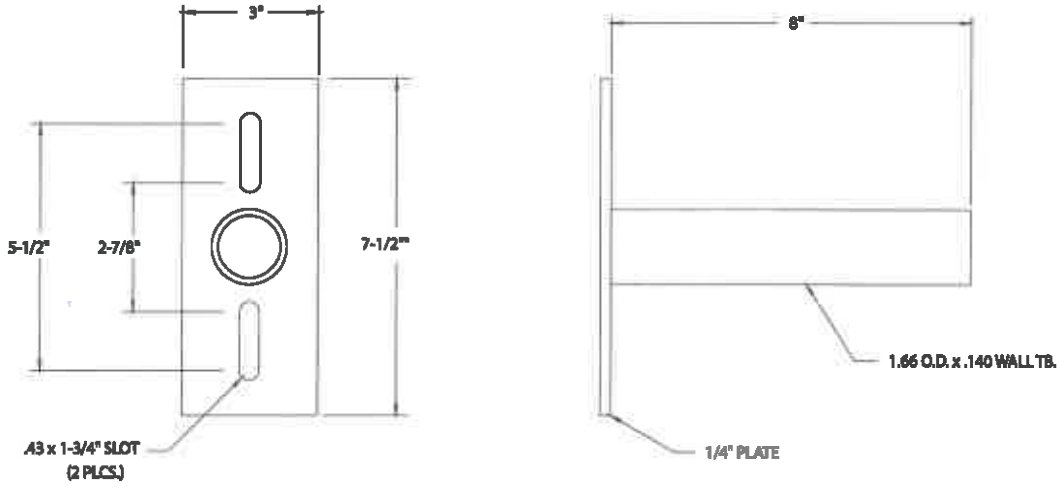

UMS POLE ADAPTOR

© 2014-2021 Acuity Brands Lighting, Inc. All Rights Reserved. 03/10/21

Warranty Five-year limited warranty. Complete warranty terms located at:
www.acuitybrands.com/support/warranty/terms-and-conditions
Actual performance may differ as a result of end-user environment and application.
Specifications subject to change without notice.

Please contact your sales representative for the latest product information.

SMART CONTROL
SPECIFICATIONS SHEETS

Ubicell Model 2.0 Smart Streetlight Controller

ubicell™

Specifications

Lamp Interface	LED, CF and HID
Lamp Power	960W@480V, 554W@277V, 480W@240V, 240W@120V
On/Off	Photocell control, software programmable
Dimming Controls	PWM, 0-10V, DALI, DALI2
Dimming Range	DIM 1 - 0-10V PWM, ability to detect stray voltage but prohibits external sensor use DIM 2 - 0-10V PWM, ability to hardwire an external sensor, but prohibits the ability to detect stray voltage DIM 3 - DALI enabled, ability to hardwire an external sensor, plus the ability to detect stray voltage
External Sensor Interface	DALI/DALI 2
Communication Module	LTE CAT-1
Location Based Services	GPS, WiFi traffic movement, Bluetooth info beacons
OTA Updates	Yes
Security	AES 128/256-bit encryption
Voltage Detection	Real-time detection of "energized" metal poles
Power Surge Protection	10KV/5KA
Power Supply	90V to 506V (50/60Hz)
Average Power Consumption	1W
IP Ratings	IP66
Impact Rating	IK07
Operating Temperature Range	-30C to +70C
Dimensions	Diameter: 82.5mm (3.25 in) Height: 98mm (3.86 in)
Weight	290 grams
Network Protocol	IPV4 and IPV6 network compliant





Utility Power Metering

Accuracy	ANSI C12.20 Class 0.5
Accuracy Verification	Infrared pulse
Line Voltage	90V to 506V (50/60Hz)
Line Voltage Accuracy	+/- 0.5%
Current Accuracy	+/- 0.5%
Power	Active/reactive/power factor
Energy Consumption	kWh
Sag & Swell Detection	Yes
On/Off Cycles	Cycle count and cycle variation (fault detection)
Running Hour	0-10 years



Programmable Parameters

- Customer device management
- Scheduling controls
- Alert thresholds
- Sunrise/sunset offsets
- Tilt detection
- Vibration detection
- Voltage detection
- Power detection
- Photocell levels
- Luminaire fault detection
- Power loss after power failure
- Network communication failure
- Wireless network configuration

Warranty

5-Year Warranty

10-Year Optional Warranty

ubicquia

POLE AND ARM
SPECIFICATIONS SHEETS

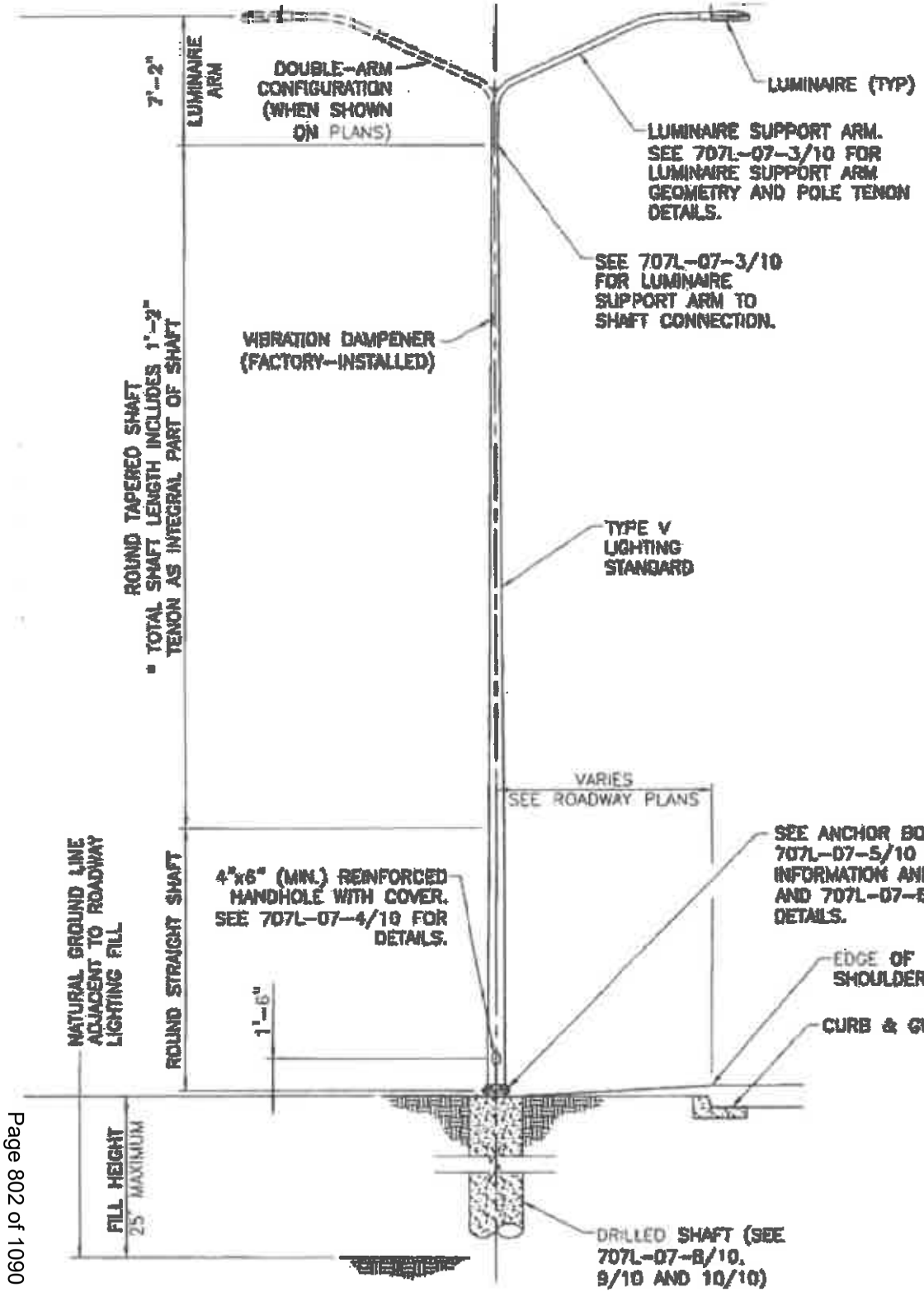

TABLE OF VARIABLE POLE DIME

MOUNTING HEIGHT	ARM CONFIGURATION	MAX TAPERED SHAFT LENGTH	TOTAL SHAFT LENGTH*	OUTSIDE DIA BOTTOM
30'-0"	SINGLE	22'-7"	24'-0"	8.00
	DOUBLE			
40'-0"	SINGLE	30'-0"	34'-0"	8.00
	DOUBLE			
50'-0"	SINGLE	39'-6"	44'-0"	10.00
	DOUBLE			

THIS STAND
PROJECTS.
DRAWINGS
DRAWINGS TH
WILL BE IDE
NOT BE PR
DESIGNER W
THE RESPON

DATE

DEPART

JASON MIGLIACCIO
NEW MEXICO
19258
PROFESSIONAL ENGINEER

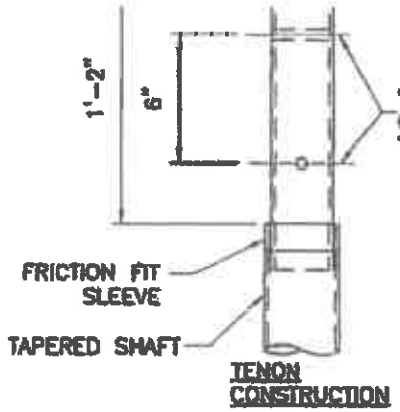

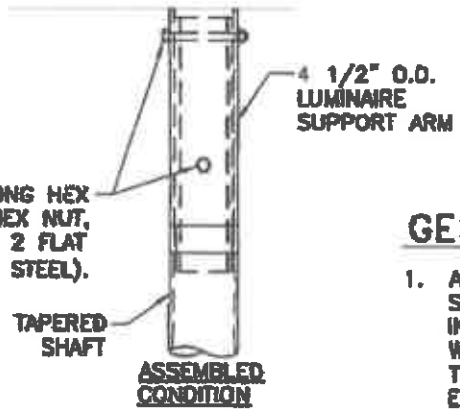

POLE TENON DETAILS
NOT TO SCALE

GENERAL

1. ARM BOTTOM SLIPFITTER CC INTERNAL AND WOULD DAMAG THE PROPER ELECTRICAL CI
2. ARM MEMBERS DIAMETER AT
3. HORIZONTAL M A SQUARE GR FABRICATOR'S
4. IF ARM CONNI DEPICTED HER SHALL ENSURI THE STRENGTI MEMBER. DIM CONNECTIONS WITH THE DIM

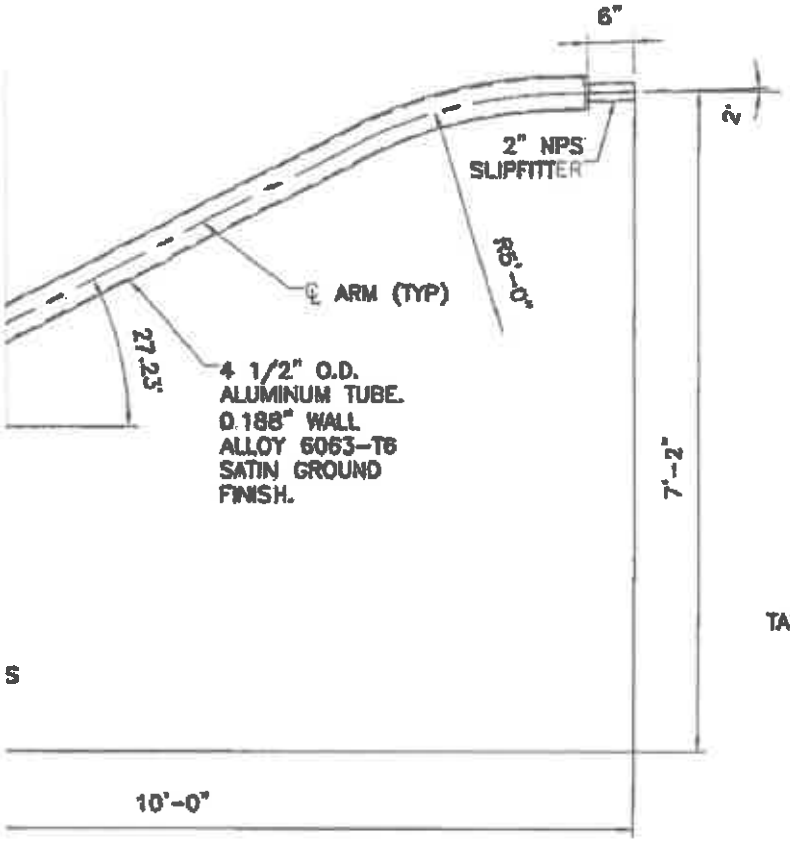

E SUPPORT ARM GEOMETRY
NOT TO SCALE

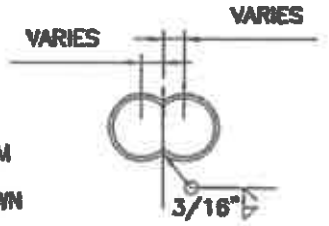

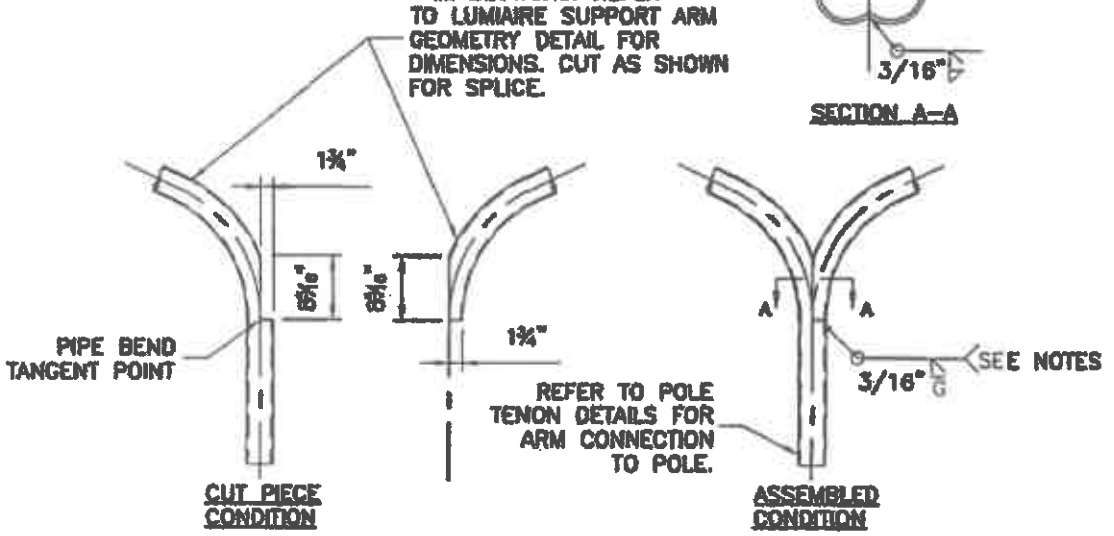

DOUBLE ARM SPLICE DETAILS
NOT TO SCALE

THIS STAND PROJECTS. DRAWINGS DRAWINGS TH WILL BE IDE NOT BE PR DESIGNER IN THE RESPON

DATE

DEPAR

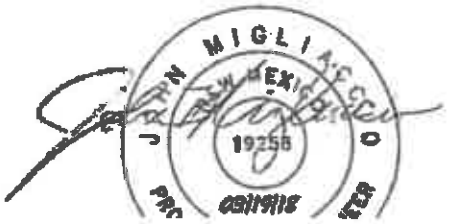

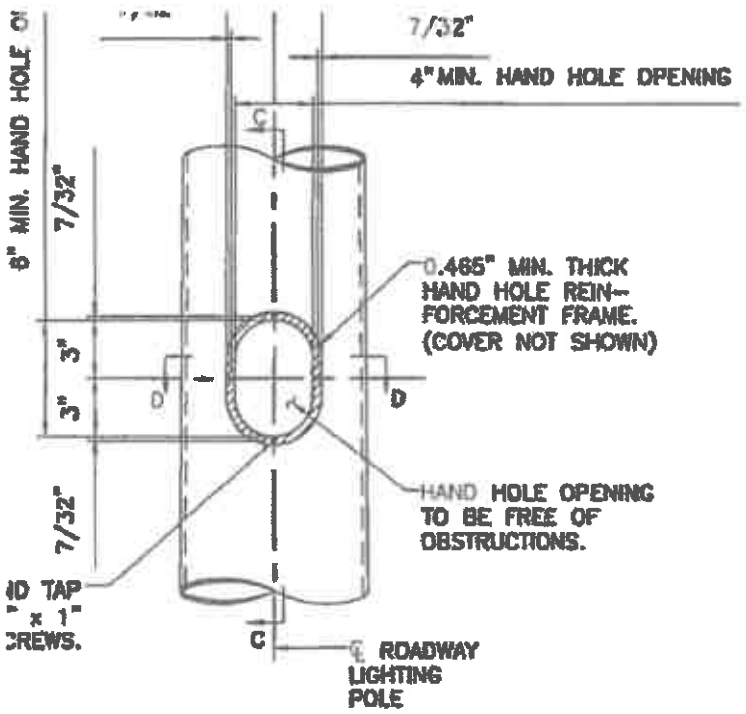

HAND HOLE DETAIL
NOT TO SCALE

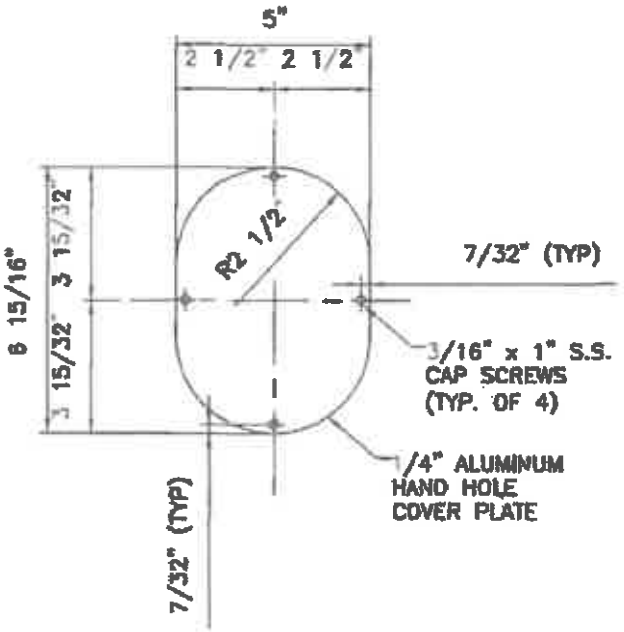

HAND HOLE COVER
NOT TO SCALE

GENERAL NOTES

1. HANDHOLES SHALL BE FREE OF OBSTRUCTIONS WHICH WOULD D OR THE PROPER OPERATION OF COMPONENT.
2. HAND HOLE COVER SHALL BE F 6063-T6 PLATE OR MAY BE HIN OF CLOSURE AS APPROVED BY
3. HAND HOLE REINFORCEMENT FRA 15/32" (MIN) WALL TUBING, CAS
4. COORDINATE LOCATIONS OF HOLI HOLE COVER PLATES WITH CONS REINFORCING FRAME. TAPPED H REINFORCING FRAME RING.
5. HAND HOLES SHALL BE ORIENTE TRAFFIC.
6. IF HAND HOLE FABRICATION DET HEREIN ARE PROPOSED, THE DE HAND HOLE REINFORCEMENT SHA SECTION TO THAT OF A SHAFT F DIMENSIONS OF ALTERNATE HAND GENERALLY CONSISTENT WITH TH

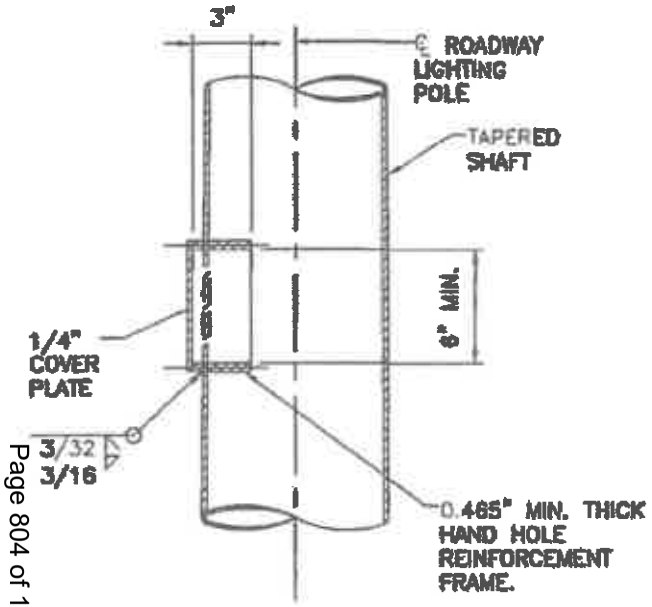

SECTION C–C

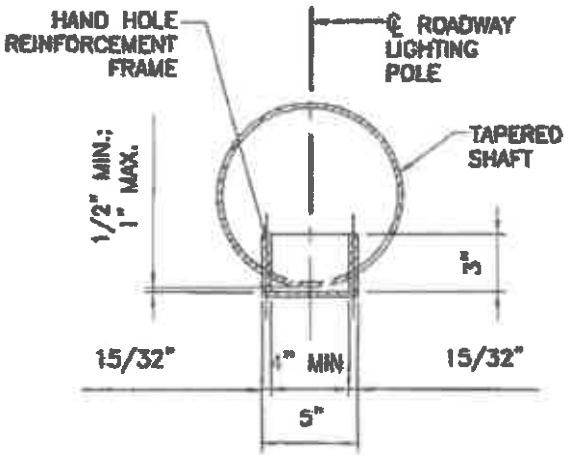

SECTION D–D

THIS STAN
PROJECTS.
DRAWINGS
DRAWINGS T
WILL BE ID
NOT BE PI
DESIGNER W
THE RESPO

DATE

DEPAR

NUMBER OF BOLTS	SLOTTED HOLE SIZE	BOLT CIRCLE DIAMETER	BOLT TEMPLATE		BASE PLATE OPENING	BASE PLATE	
						WIDTH	THICKNESS
		"B"	O.D.	I.D.	"A"	"C"	"D"
	(IN x IN)	(IN)	(IN)	(IN)	(IN)	(IN)	(IN)
4	1.25 x 2.25	15.0	18.0	12.0	7.0	16.0	1.0
4	1.25 x 2.25	11.5	14.5	8.5	6.0	14.0	1.0
4	1.25 x 2.25	11.5	14.5	8.5	5.0	14.0	1.0

MOUNTING HEIGHT	WELD SIZE (SINGLE ARM)	WELD SIZE (DOUBLE ARM)
(FT)	(IN)	(IN)
50	5/16	3/8
40	5/16	3/8
30	1/4	1/4

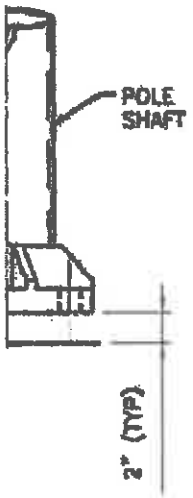

EVATION
ALE

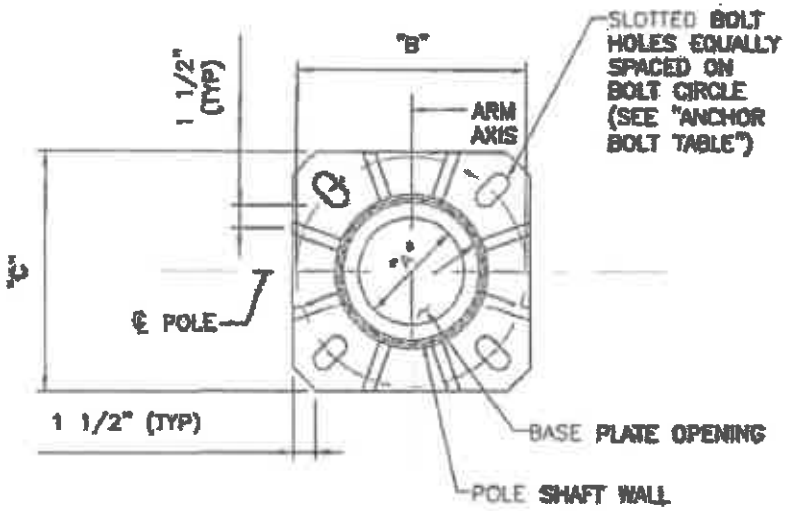

POLE BASE PLAN
NOT TO SCALE

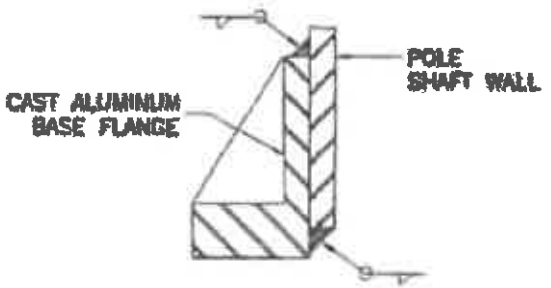

BASE WELD DETAIL
NOT TO SCALE

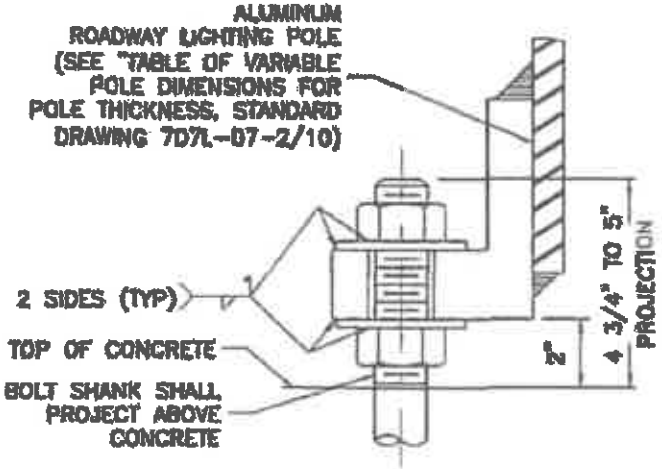

ANCHOR BOLT DETAIL
NOT TO SCALE

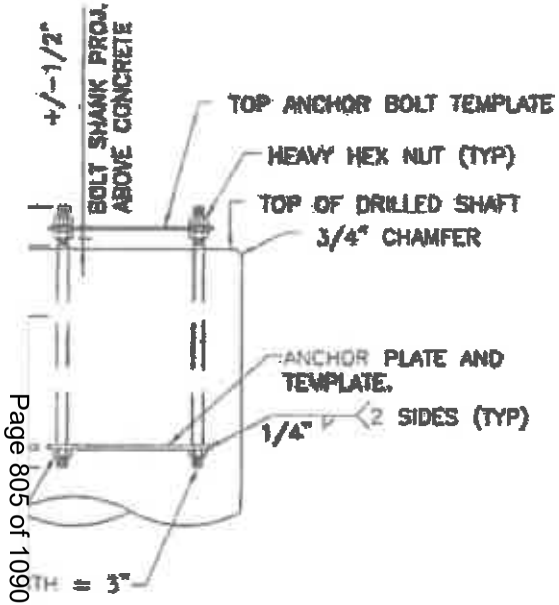

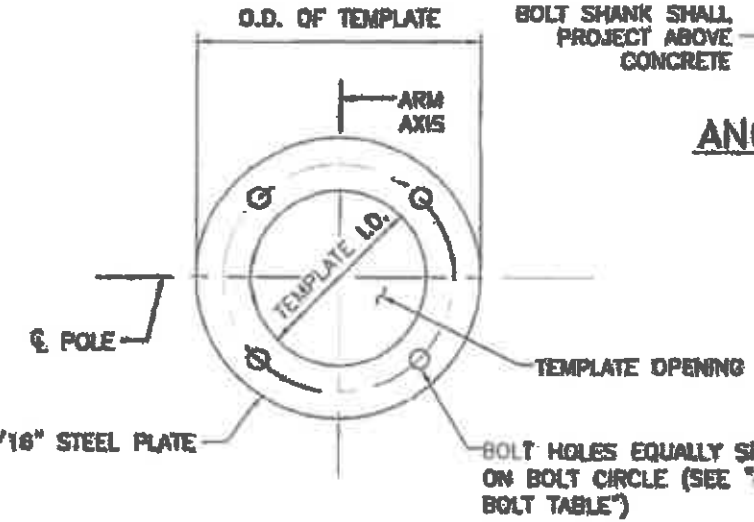

2. INSTALL DIRI SPECIFIED. DIRECT-MOU REQUIREMEN

3. ALUMINUM E ALUMINUM A ASTM B 10E ACCOMMODA AND SHALL FULL MOME STRENGTHS BASE FLANG OUTSIDE DIA MAY BE INCI BASE FLANG

4. ANCHOR BOI FOR THE AL THE PROVIDI BOLT SIZES MINIMUM.

5. ANCHOR BOI LENGTHS SH 7071-07-9, DIRECT-MOU ACCORDINGL

6. WHEN BREAK THREAD UNC THAT OF THI

THIS STAMP PROJECTS C DRAWINGS O DRAWINGS TH WILL BE FOR NOT BE FIN DESIGNER IN THE RESPON

DATE

DEPART

JOHN MIGLIACCIO
NEW MEXICO
19258
PROFESSIONAL ENGINEER

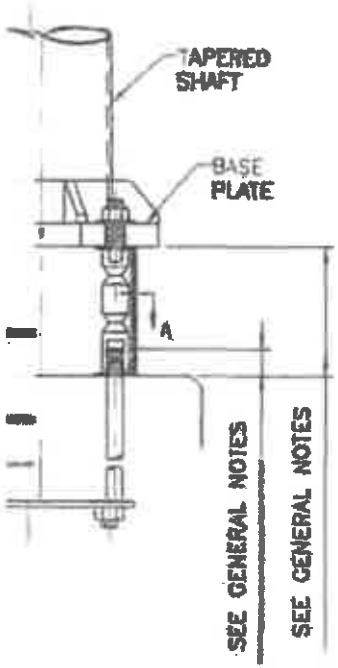

WAY POLE
ELEVATION
O SCALE

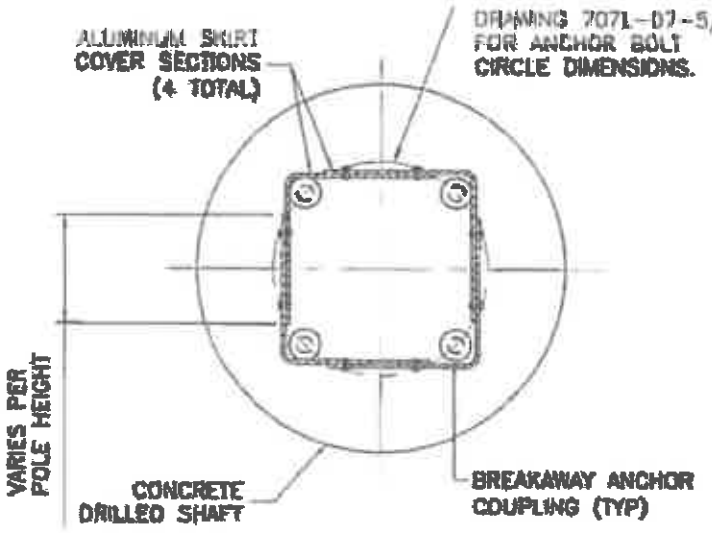

SECTION A-A:
BREAKAWAY BASE SECTION
NOT TO SCALE

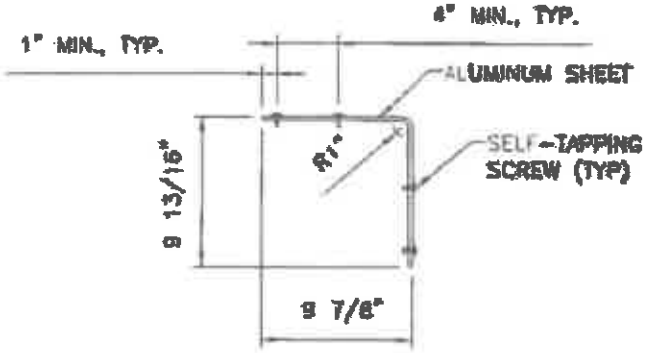

PLAN

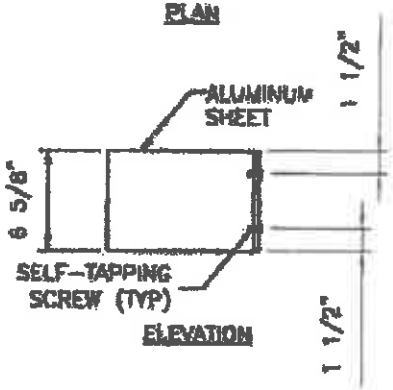

ELEVATION

ANCHOR BOLT DETAILS AND REQUIREMENTS.

2. SKIRT COVER SHALL BE FABRICATED FROM 1/16" SHEET ALUMIN
3. WHEN BREAKAWAY BASES ARE SPECIFIED, EACH LIGHT POLE SHA FOUR (4) SKIRT COVER SECTIONS AND SIXTEEN (16) SCREWS.
4. THE INTENDED USE OF THE SKIRT COVER IS TO ENCLOSE THE V BREAKAWAY SUPPORT COUPLINGS.
5. SCREWS SHALL BE SELF-TAPPING #10 x 5/8" STAINLESS STEEL.
6. BREAKAWAY SUPPORT COUPLINGS SHALL MEET THE REQUIREMENT 350, AND THE REQUIREMENTS IN 2015 (1st EDITION) AASHTO LR STRUCTURAL SUPPORTS FOR HIGHWAY SIGNS, LUMINAIRES AND TI SECTION 12.
7. WHEN BREAKAWAY BASES ARE SPECIFIED, EACH LIGHT POLE SHA FOUR (4) COUPLING SYSTEMS, COMPLETE WITH COUPLINGS, THRE NUTS, AND SHIMS.
8. BREAKAWAY ASSEMBLY DIMENSIONS VARY PER MANUFACTURER. I PROJECTIONS AND BASE PLATE OFFSETS IN ACCORDANCE WITH S ASSEMBLY MANUFACTURER'S SPECIFICATIONS.
9. ALTERNATE DESIGNS OF BREAKAWAY ASSEMBLIES MAY BE APPRO MANAGER, PROVIDED THEY MEET THE REQUIREMENTS HEREIN. WHI BREAKAWAY SYSTEMS ARE UTILIZED, IT SHALL BE THE THE CONTR RESPONSIBILITY TO PROVIDE COMPATIBLE SKIRT COVERS, AND MA ADJUSTMENTS TO ANCHOR BOLT PROJECTIONS.
10. CERTIFICATION OF BOTH BREAKAWAY AND STRUCTURAL ADEQUACY, AND/OR TEST DATA OF PRODUCTION SAMPLES TO SUPPORT CERT PROVIDED FOR BREAKAWAY SYSTEMS.

THIS STAND
PROJECTS.
DRAWINGS
DRAWINGS TH
WILL BE RE
NOT BE PR
DESIGNER W
THE RESPON

	DATE

DEPART

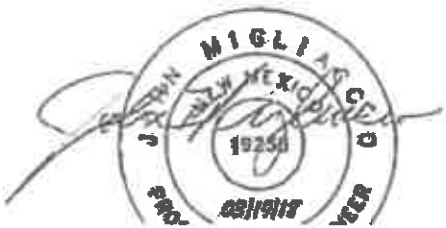

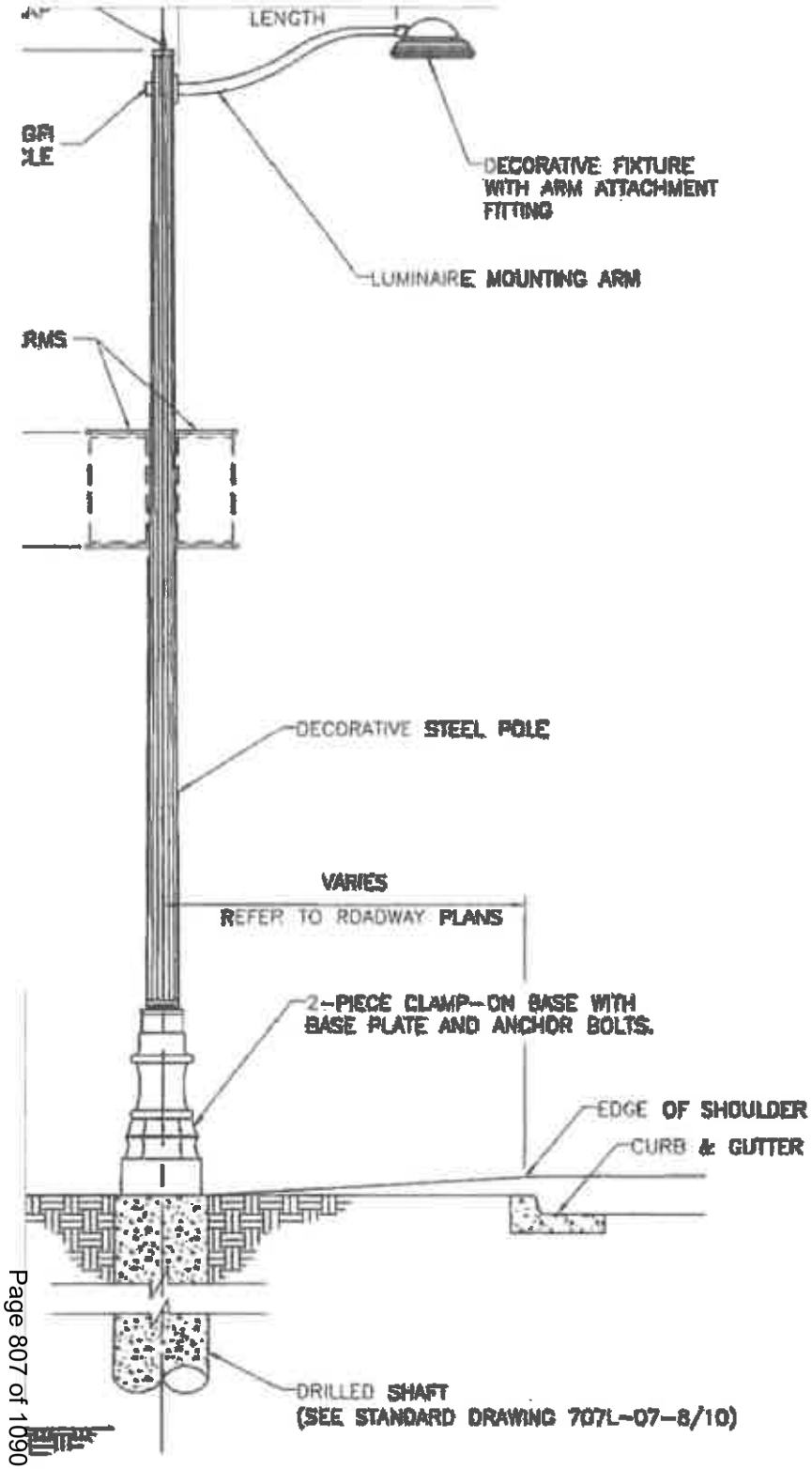

2. SHOP DRAWINGS FOR ORNAMENTAL LIGHT ASSEMBLIES SHALL BE PROVIDED TO THE NMDOT PROJECT MANAGER FOR APPROVAL, PRIOR TO FABRICATION AND CONSTRUCTION. SHOP DRAWINGS SHALL DEPICT ALL FEATURES AND OPTIONS CALLED FOR IN THE CONTRACT DOCUMENTS INCLUDING, BUT NOT LIMITED TO:

   A. POLE MODEL
   B. POLE HEIGHT
   C. POLE SHAFT MATERIAL
   D. POLE SHAFT STYLE
   E. POST CAP STYLE
   F. ARM MODEL
   G. ARM LENGTH
   H. ARM MATERIAL
   I. ARM STYLE
   J. LUMINAIRE FIXTURE MODEL
   K. LUMINAIRE FITTING MOUNT METHOD
   L. WATTAGE
   M. LIGHT SOURCE TYPE
   N. VOLTAGE
   O. LUMINAIRE LENS TYPE
   P. OPTICS TYPE
   Q. DECORATIVE BASE STYLE
   R. ACCESS DOOR LOCATION AND SIZE
   S. BASE PLATE
   T. ANCHOR BOLTS
   U. FOUNDATION LOADINGS
   V. GROUND FAULT INTERRUPTER LOCATION
   W. BANNER ARM LOCATIONS
   X. FINISHES

3. FOR ALL STRUCTURAL COMPONENTS PROVIDED BY THE ORNAMENTAL LIGHTING MANUFACTURER, CERTIFICATION OF STRUCTURAL ADEQUACY AND DESIGN CALCULATIONS TO SUPPORT CERTIFICATION SHALL BE PROVIDED.

4. THE POLE AND BASE ASSEMBLY SHALL BE PROVIDED WITH ONE ACCESS DOOR FOR WIRING AND MECHANICALLY SECURED WITH TWO, TAMPER-PROOF STAINLESS STEEL SCREWS OR OTHER APPROVED METHOD. ACCESS DOOR SHALL BE LOCATED OPPOSITE FROM THE STREET-FACING SIDE OF THE POLE.

5. THE 30' DECORATIVE ROADWAY LIGHTING OPTION ELEVATION SHOWN ON THIS STANDARD DRAWING IS A SCHEMATIC REPRESENTATION OF POSSIBLE FEATURES IN THE ASSEMBLY. ACTUAL OPTIONS, FEATURES, AND COMPONENTS SHALL BE SELECTED BY NMDOT ON A PROJECT BASIS AND WILL BE SPECIFIED IN THE ROADWAY PLANS.

THIS STAND
PROJECTS. D
DRAWINGS. D
DRAWINGS TH
WILL BE IDE
NOT BE PRI
DESIGNER WH
THE RESPONS

	DATE

DEPART

JOSEPH MIGLIACCIO
NEW MEXICO
19250
PROFESSIONAL ENGINEER
05/19/18

ION 511 OF THE LATEST EDITION OF THE NEW MEXICO STANDARD SPECIFICATIONS FOR HIGHWAY AND BRIDGE STRUCTION. FOUNDATIONS SHALL BE COMPLETED AT LEAST 7 DAYS BEFORE ERECTING LIGHTING STRUCTURES ON THE IDATIONS.

INUM ROADWAY LIGHTING SUPPORT STRUCTURES TYPE V FOR THE 30 FT, 40 FT, AND 50 FT CASES, AND ASSOCIATED IDATIONS, ARE DESIGNED TO CONFORM TO 2015 (1ST EDITION) AASHTO STANDARD SPECIFICATIONS FOR STRUCTURAL ORTS FOR HIGHWAY SIGNS, LUMINAIRES AND TRAFFIC SIGNALS. STEEL DECORATIVE (ORNAMENTAL) LIGHTING, AND CIATED FOUNDATIONS, IS DESIGNED TO CONFORM TO 2009 (5TH EDITION) AASHTO STANDARD SPECIFICATIONS FOR CTURAL SUPPORTS FOR HIGHWAY SIGNS, LUMINAIRES AND TRAFFIC SIGNALS.

CONCRETE FOR DRILLED SHAFT FOUNDATIONS SHALL BE CLASS G, f'c = 3000 PSI. ALL CONCRETE FOR SPREAD ING FOUNDATIONS SHALL BE CLASS A, f'c = 3000 PSI. CONCRETE SHALL CONFORM TO SECTION 510 – PORTLAND NT CONCRETE. ALL EXPOSED EDGES OF CONCRETE SHALL BE CHAMFERED ¾" UNLESS OTHERWISE NOTED.

ORCING STEEL (REBAR) SHALL CONFORM TO SECTION 540 – STEEL REINFORCEMENT AASHTO M 31 (ASTM A615), E 60. DIMENSIONS REFER TO THE CENTERLINE OF THE BAR. ALL REINFORCING STEEL SHALL BE NON–EPOXY SS OTHERWISE NOTED.

IOR BOLTS SHALL CONFORM TO AASHTO M 314 (ASTM F1554 GRADE 55). PROVIDE A HEX NUT, LEVELING NUT AND SHERS TOP AND BOTTOM OF EACH BOLT. ANCHOR BOLTS SHALL BE CONSIDERED INCIDENTAL TO THE FOUNDATIONS.

IDE BOLT TEMPLATE FOR CAST–IN–PLACE INSTALLATION OF ANCHOR BOLTS. COORDINATE TEMPLATE REQUIREMENTS BOLT CIRCLE DIAMETER, BOLT DIAMETER, AND DRILLED SHAFT DIAMETER FOR PLACEMENT AND FIT. TAKE PROPER TO ALIGN FOUNDATION BOLT PATTERN WITH THE BASE PLATE PATTERN THAT RESULTS IN CORRECT CENTERLINE MENT OF SUPPORT STRUCTURE WITH BOLT PATTERN.

TO ERECTION OF POSTS, EXCAVATION CREATED FOR FOUNDATION CONSTRUCTION SHALL BE BACKFILLED IN RDANCE WITH SECTION 210 OF THE LATEST EDITION OF THE NEW MEXICO STANDARD SPECIFICATIONS FOR HIGHWAY BRIDGE CONSTRUCTION WITH MATERIAL EQUIVALENT TO THE SURROUNDING SOIL. FOUNDATION CONCRETE SHALL HAVE HED A MINIMUM STRENGTH OF 2200 PSI PRIOR TO BACKFILLING. BACKFILL SHALL BE CONSIDERED INCIDENTAL TO TRUCTION.

IDATION DESIGN IS FOR THE ROADWAY LIGHTING SUPPORT STRUCTURES STANDARD DIAMETERS. IF A LARGER DIAMETER RNISHED, THE CONTRACTOR SHALL BUILD A LARGER FOUNDATION AS DETERMINED NECESSARY BY THE PROJECT GER AND NO ADDITIONAL PAYMENT OR COMPENSATION SHALL BE MADE.

ED SHAFT DESIGN CONSIDERED PARAMETERS FOR COHESIVE AND NON–COHESIVE SOILS AS WELL AS ROCK. SHOULD OR SOIL CONDITIONS POSE UNIQUE CHALLENGES, CONSULT WITH THE STATE GEOTECHNICAL ENGINEER FOR ANY DIAL MEASURES BEFORE PLACEMENT OF THE FOUNDATION.

ED SHAFT FOUNDATION DEPTH MUST BE INCREASED IF INSTALLED ON OR NEAR (WITHIN A SHAFT DIAMETER OF) A ND SLOPE. IF GROUND SLOPES MINIMALLY DOWN NO MORE THAN 2 FEET AND THEN BACK UP WITHIN ½ IDATION DEPTH, AS IN A DRAINAGE DITCH, TREAT AS IF LEVEL. SEE FOUNDATION DETAIL FOR SLOPING GROUND, THIS T.

HED GRADE FOR ALL FOUNDATIONS SHALL BE PER THE CONTRACT DOCUMENTS. THE TOP OF STANDARD FOUNDATIONS BE FLUSH WITH ADJACENT SIDEWALK OR PAVED AREAS WHEN PRESENT AND SHALL CONFORM TO THE AMERICANS DISABILITIES ACT.

BASE PLATE AND ANCHOR BOLT DETAILS, SEE 707L–07–5/10.

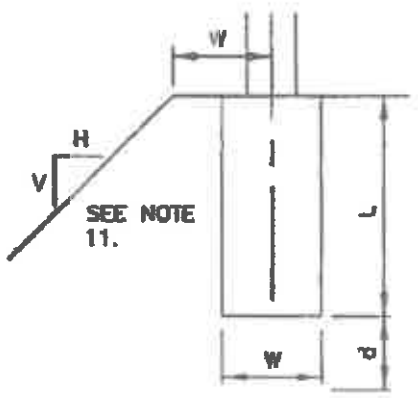

FOUNDATION DETAIL FOR SLOPING GROUND

THIS STA
PROJECTS.
DRAWINGS
DRAWINGS
WILL BE
NOT BE
DESIGNER
THE RESP

NO.	DAT

DEPAI



IDWAY LIGHTING
F STRUCTURE
STANDARD DRAWINGS
7-1/10
4
7-7/10

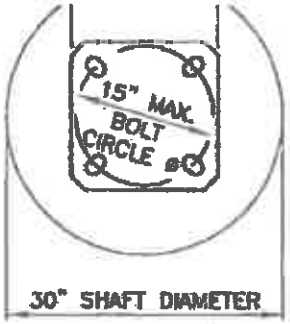

SECTION A-A
NOT TO SCALE

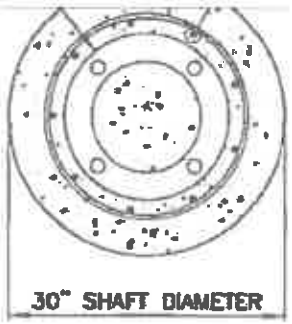

SECTION B-B
NOT TO SCALE

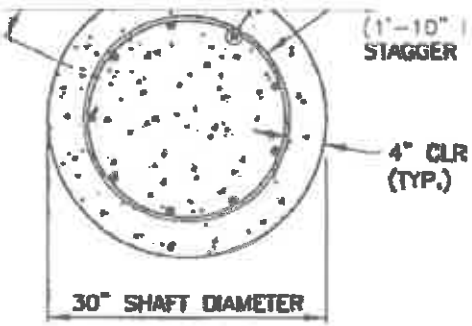

SECTION C-C
NOT TO SCALE

DRILLED SHAFT LENGTHS

SEE NOTE 9 FOUNDATION NOTES 707-07-8/10

POLE HEIGHT (ft)	DRILLED SHAFT LENGTH (ft)
50	8.5
30 ORNAMENTAL	7.0
40	7.5
30	6.0

ANCHOR BOLTS

POLE HEIGHT (ft)	POLE DIAMETER O.D. (in)	BOLT DIAMETER (in)	BOLT LENGTH (in)	NUMBER OF BOLTS	BOLT CIRCLE DIAMETER (in)
50	10	1.000	52	4	15
40	9	1.000	52	4	11.5
30	8	1.000	52	4	11.5

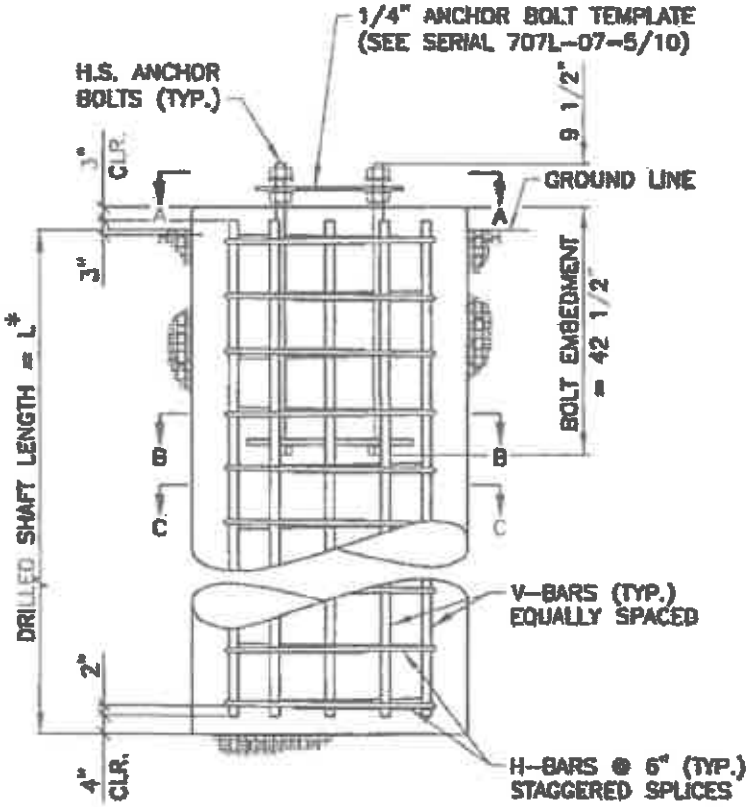

FOUNDATION ELEVATION

NOT TO SCALE

* DRILLED SHAFT LENGTH IS MEASURED AS LENGTH OF SHAFT IN SOIL OR ROCK AS APPLICABLE. SEE DRILLED SHAFT LENGTHS TABLE FOR LENGTH.

REINFORCI

#8V1 | DRILLED SHAFT LI



THIS STAN
PROJECTS.
DRAWINGS
DRAWINGS
WILL BE
NOT BE
DESIGNER
THE RESPO

NO.	DAT

DEPAR



ADE
11
IN NOTES
8/10

DWAY LIGHTING
STRUCTURE
STANDARD DRAWINGS
-1/10
-
-7/10

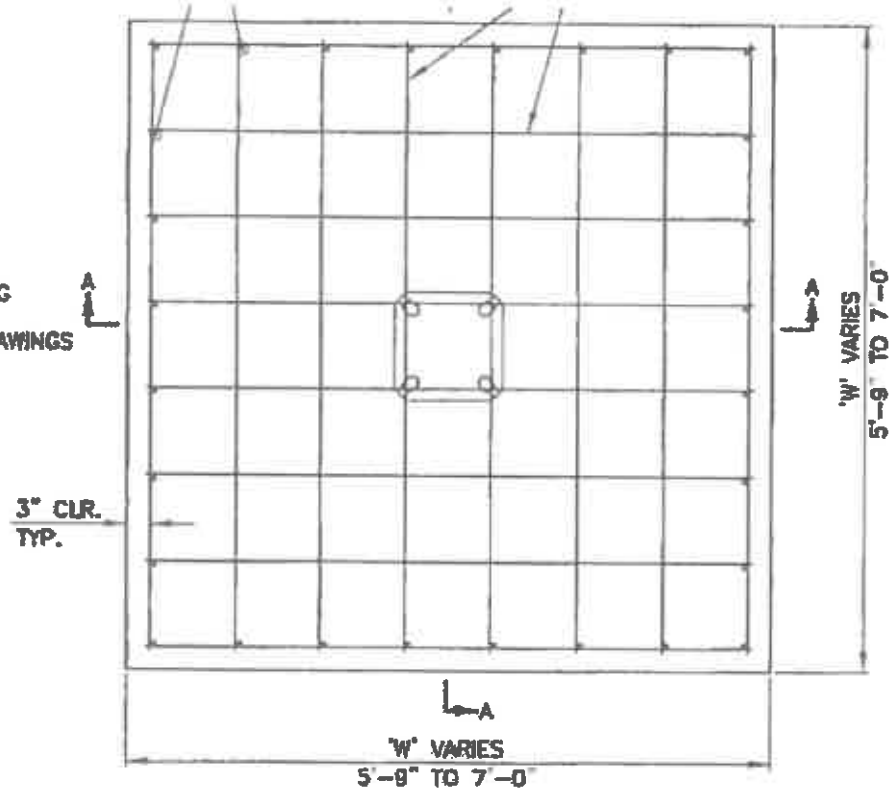

PLAN VIEW OF SPREAD FOOTING
NOT TO SCALE

DESIGN DATA:

DESIGN STRENGTH:

CONCRETE: fc' = 3000 PSI @ 28 DAYS = NMDOT CLA
REINFORCING STEEL: fy = 60 KSI
ALLOWABLE SOIL BEARING PRESSURE: 1.0 T/SQ. FT.

ROADWAY LIGHTING MOUNTING HEIGHT (ft)	SQUARE FOOTING WIDTH 'W' (ft)	SQUARE FOOTING DEPTH 'D' (ft)	REINFORCING SCHEDU		
			MARK	SIZE	LENGTH
50	7.00	3.50	#4V	#4	3'-0"
			#4H	#4	6'-6"
40	6.50	3.50	#4V	#4	3'-0"
			#4H	#4	6'-0"
30	5.75	3.50	#4V	#4	3'-0"
			#4H	#4	5'-3"
30 ORNAMENTAL	6.75	3.50	#4V	#4	3'-0"
			#4H	#4	6'-3"

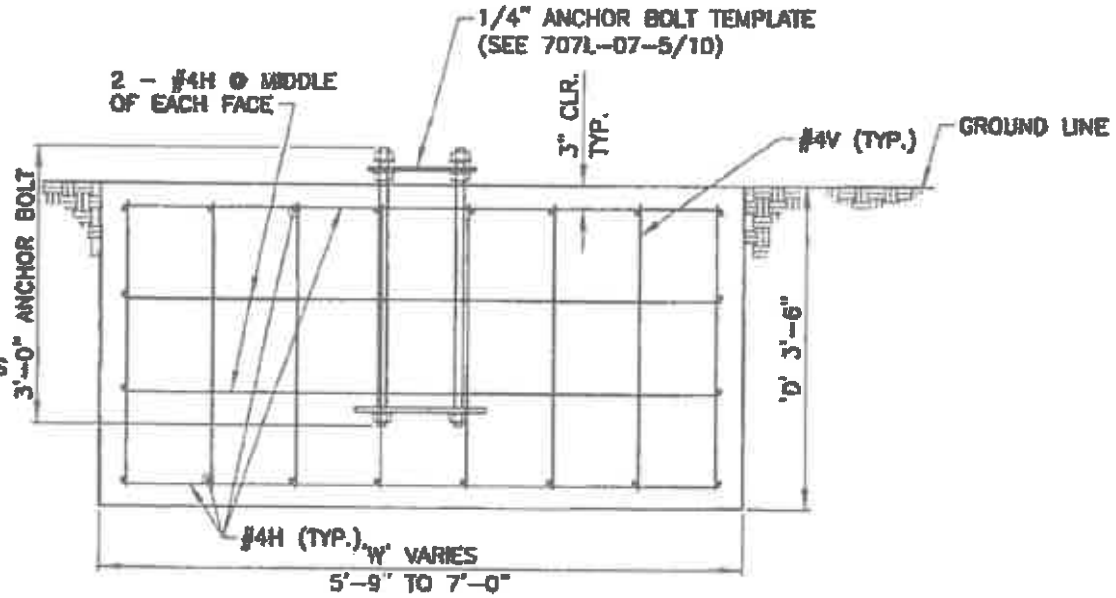

ISH GRADE
E NOTE 11
UNDATION NOTES
PL-07-8/10

THIS STA
PROJECTS.
DRAWINGS
DRAWINGS
WILL BE
NOT BE
DESIGNER
THE RESP

NO.	DA

DEPAI



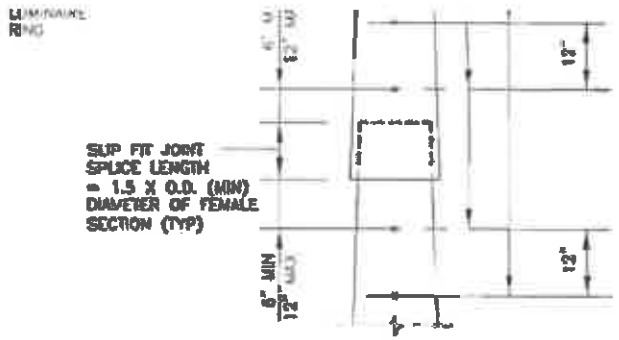

SLIP JOINT DETAIL
NOT TO SCALE

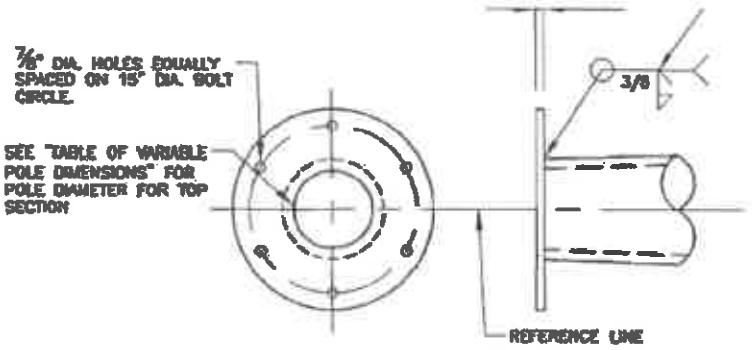

TOP CONNECTION DETAIL
NOT TO SCALE

HEIGHT "H"	SECTION	SECTION LENGTH	SPL LEN
(FT)		(FT)	(I
150	1	40.00	53
	2	39.50	26.
	3	39.42	18
	4	37.50	0.(
120	1	42.00	26
	2	41.33	18
	3	40.33	0.(
100	1	32.00	25
	2	31.67	19
	3	40.00	0.(
75	1	38.92	20
	2	37.75	0.(

TYPE VI LIGHTING STANDARD

SLIP FIT JOINT SPLICE LENGTH = 1.5 X O.D. (MIN) DIAMETER OF FEMALE SECTION (TYP) (SEE "SLIP JOINT DETAIL" THIS SHEET).

NOTE 7, TYP

11" X 30" REINFORCED HAND HOLE

SEE ANCHOR BOLT TABLE 707L-08-3/7 FOR ANCHOR BOLT INFORMATION.

GENERAL NOTES:

1. DESIGN CONFORMS TO 2001 AASHTO STANDARD SPECIFICATIONS FOR STRUCTURAL SUPPORTS FOR HIGHWAY SIGNS, LUMINAIRES AND TRAFFIC SIGNALS, WITH REVISIONS UP TO AND INCLUDING 2006 INTERIMS.

2. DESIGN CRITERIA:

   RECURRENCE INTERVAL = 50 YRS
   SERVICE LIFE = 50 YRS
   DESIGN WIND SPEED = 90 MPH
   GUST EFFECT FACTOR = 1.14
   FATIGUE CATEGORY I
   MATERIALS (POLES AND HAND HOLES): 55,000 PSI MINIMUM YIELD

   MAXIMUM NUMBER OF LUMINAIRES IS EIGHT (8). MAXIMUM WEIGHT OF EACH LUMINAIRE IS 85 LBS. WITH A PROJECTED AREA OF 3.4 FT².

   MAXIMUM ALLOWABLE DEFLECTION = 9% OF POLE HEIGHT.

3. WORKMANSHIP AND MATERIALS SHALL CONFORM TO NEW MEXICO DEPARTMENT OF TRANSPORTATION (NMDOT) STANDARD SPECIFICATIONS FOR HIGHWAY AND BRIDGE CONSTRUCTION CURRENT EDITION. CONTRACTOR SHALL CONTACT NMDOT FOR APPROVED PRODUCTS LISTING.

4. POLES SHALL CONSIST OF ROUND TELESCOPING SECTIONS, TAPERED AT A RATE OF 0.14"/FOOT. MULTI-SIDED SECTIONS WILL BE PERMITTED AS AN ALTERNATE DESIGN. SEE NOTE 9 FOR REQUIREMENTS.

5. MATERIALS:

   A. POLES SHALL BE STEEL OF 50 KSI MINIMUM YIELD STRENGTH AFTER FABRICATION.

   B. BASE PLATES AND ANCHOR BOLT TEMPLATES SHALL BE PER AASHTO M-183 (ASTM A-36).

   C. HARDWARE AND ANCHOR BOLTS SHALL BE PER AASHTO M-314 (ASTM F-1554), GR. 55. EACH BOLT SHALL BE SUPPLIED WITH A MINIMUM OF THREE HEAVY HEX NUTS AND TWO FLAT WASHERS. STEEL BOLT TEMPLATES SHALL BE SUPPLIED WITH ANCHOR BOLTS. NUTS SHALL BE ASTM A-563. WASHERS SHALL BE ASTM A-436.

   D. PRELOAD BOLTS BASED ON BOLT TYPE AND DIAMETER. PROVIDE LOCKING ADHESIVE (NO INDUSTRIES, NYLOCK, LOCKTITE, OR APPROVED EQUAL).

6. GALVANIZING:

   A. POLES AND PLATES SHALL BE GALVANIZED PER AASHTO M-111-84 (ASTM A-123).

   B. HARDWARE AND ANCHOR BOLTS SHALL BE HOT-DIPPED GALVANIZED PER AASHTO M-232 M (ASTM A-153).

7. WELDS:

   ALL FABRICATORS SHALL BE CERTIFIED UNDER NMDOT SPECIFICATION SECTION 541.3 "CERTIFICATION OF STEEL FABRICATORS", AND SHALL CONFORM TO THE LATEST EDITION OF THE STRUCTURAL WELDING CODE (ANSI/AWS D1.1) AND SHALL

8. THE CONTRACTOR/FABRICATOR SHALL FURNISH EIGHT SETS OF SHOP DRAWINGS OF ALL HIGH MAST LUMINAIRE SUPPORT STRUCTURE COMPONENTS FOR THE TYPE VI LIGHTING STANDARD TO THE STATE BRIDGE ENGINEER FOR APPROVAL. SHOP DRAWINGS SHALL COVER ALL MECHANISMS/PARTS REQUIRED FOR THE INSTALLATION. THE CONTRACTOR SHALL FURNISH AN APPROPRIATE CERTIFICATION OF COMPLIANCE WITH ALL DESIGN REQUIREMENTS. THE CONTRACTOR'S CERTIFICATION SHALL APPEAR ON THE DRAWINGS. THE CONTRACTOR MUST RECEIVE WRITTEN APPROVAL OF THE SHOP DRAWINGS FROM THE ENGINEER PRIOR TO BEGINNING FABRICATION OR ASSEMBLY OF PARTS.

9. THE INFORMATION AND DETAILS PROVIDED FOR POLES, ANCHOR BOLTS, HAND HOLE, AND FOUNDATIONS IN THESE STANDARDS ARE MINIMUM REQUIREMENTS. DESIGN AND DETAILS FOR ALTERNATE DESIGNS AND ALL OTHER LUMINAIRE SUPPORT STRUCTURE COMPONENTS SUCH AS TOP CONNECTION PLATE, SPECIFIC REQUIREMENTS FOR HAND HOLES TO ACCOMMODATE EXTERNAL WINCH, HEADFRAME ASSEMBLY, LUMINAIRE RING ASSEMBLY, AND TOP LATCH LOWERING DEVICE SHALL BE PROVIDED BY CONTRACTOR/FABRICATOR IN COMPLIANCE WITH AASHTO SPECIFICATIONS REFERENCED IN NOTE 1 AND ALL OTHER GOVERNING ELECTRICAL AND MECHANICAL SPECIFICATIONS.

10. THE TOP CONNECTION DETAIL MAY BE REVISED TO COMPLY WITH THE REQUIREMENTS OF THE TOP LATCH LOWERING DEVICE SYSTEM. THE REVISED TOP CONNECTION DETAIL SHALL BE SUBMITTED TO NMDOT FOR REVIEW AND APPROVAL AS PART OF THE DESIGN FOR THE TOP LATCH LOWERING DEVICE SYSTEM.

11. ALL TYPE VI STANDARDS SHALL BE EQUIPPED WITH AN INTERNAL MOTOR ASSEMBLY WITH 20' REMOTE CONTROL FOR THE LOWERING DEVICE. LOWERING DEVICES SHALL BE TOP LATCH AS APPROVED BY LIGHTING DESIGN ENGINEER. THE INTERNAL MOTOR ASSEMBLY AND LOWERING DEVICE WILL BE SUBSIDIARY TO THE HIGH MAST POLE PAY ITEM.

12. THE LOWERING DEVICE, LIGHTING FIXTURES AND POLES SHALL BE MANUFACTURED AND TESTED AS AN INTEGRATED SYSTEM AND BE PROVIDED AND WARRANTED BY THE MANUFACTURER.

13. FACTORY REPRESENTATIVE SHALL PROVIDE ONE DAY TRAINING AND VIDEO TAPE ON OPERATING THE LOWERING DEVICE SYSTEM FOR THE LOCAL MAINTAINING AGENCY AND LOCAL POWER COMPANY. THIS TRAINING SHALL BE APPROXIMATELY ONE-HALF IN THE CLASSROOM AND ONE-HALF IN THE FIELD.

14. APPROXIMATELY 90 DAYS AFTER INSTALLATION, A FACTORY REPRESENTATIVE SHALL RETURN TO THE PROJECT SITE TO ADJUST THE LOWERING DEVICE CABLES AND LATCHING MECHANISMS. THE CONTRACTOR SHALL COORDINATE WITH THE NMDOT LIGHTING ENGINEER, THE LOCAL MAINTENANCE AGENCY, AND THE LOCAL POWER COMPANY TO BE PRESENT WHILE THE ADJUSTMENTS ARE MADE.

15. DURING THE ERECTION OF THE HIGH MAST LIGHTING POLES AND LOWERING DEVICES, A FACTORY REPRESENTATIVE SHALL BE PRESENT TO ENSURE CORRECT ERECTION.

16. CONTRACTOR SHALL PROVIDE COPIES OF ALL HIGH MAST LIGHTING SYSTEM TECHNICAL DATA, CALCULATIONS, SHOP DRAWINGS, AND LUMINAIRE TYPE INFORMATION TO THE LOCAL MAINTAINING AGENCY AND THE LOCAL POWER COMPANY.

17. THE DESIGN PROVIDED FOR THIS STANDARD MUST BE RE-EVALUATED FOR POLES LOCATED IN ELEVATED REGIONS AND POLES LOCATED IN SPECIAL WIND REGIONS

a yes

NO.	DATE

DEPAR

Community-Guided Smart LED Street Lighting Monthly Operations Report

October 2023

Report Date: 11/09/2023

Table of Contents

Energy Savings 3
Lighting Levels & Dark Sky Protection 4
Service 4
- Self-Detection 4
- New Lights Detected Out & Open Cases 5
- O&M and Repairs Activity 5
- Outage Rate 6
- Availability of the Assets 6
- Operational KPI Summary Table 7

Financial Reporting 8
- Operations & Maintenance 8
- Repairs 8
- Additional Work 8

Energy Savings

One of the greatest benefits of the GMPC is the continued energy savings. The conversion of the lights guarantees savings of at least 2,234,042 kWh energy savings. Figure 1 shows the energy consumption of the system before being upgraded to the Community-Guided Smart Lighting Design LED specifications (Ksb) and the energy consumption of the system fully converted to Smart LED (Kpb) today.

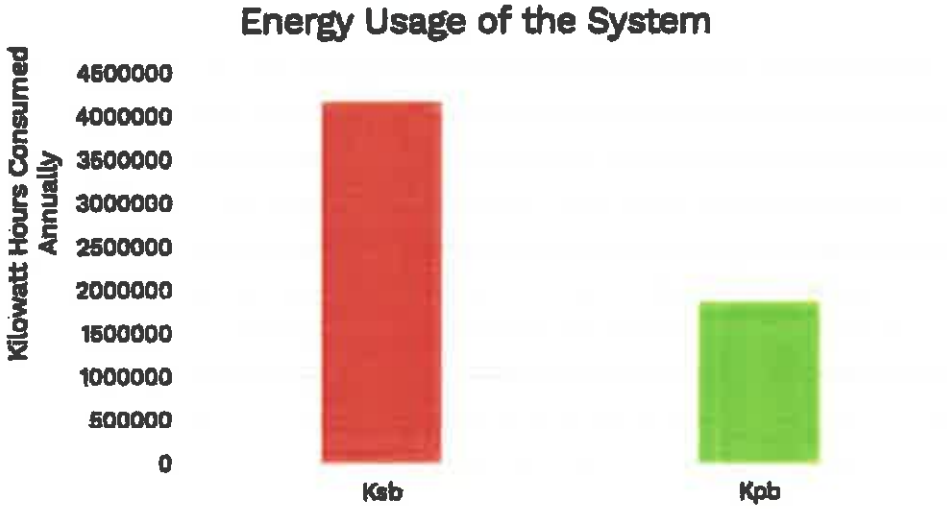

The energy savings captured through the GMPC currently (Ke) is 2,563,317 kWh/year. The *estimated** on-bill electricity savings accumulated through the date of this report is $337,764.58. The estimated annual on-bill savings is $233,060.93.

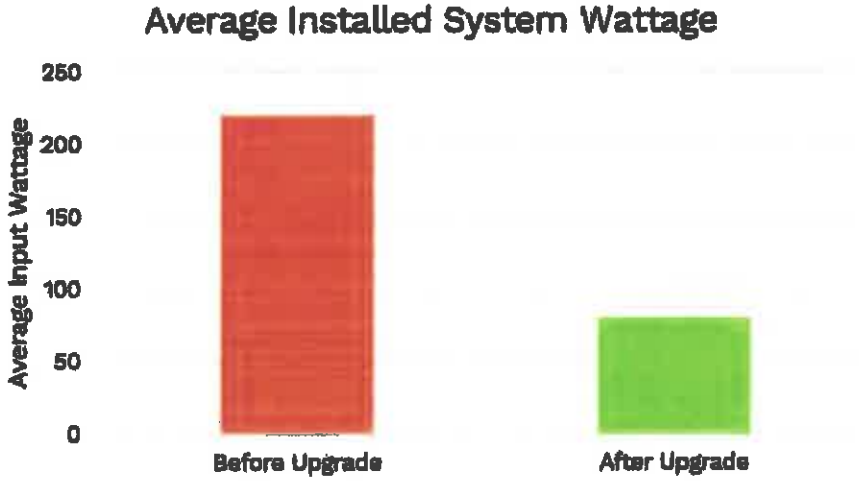

The current average installed wattage of the system (Kw) is 82.8 W.

**based on information Dalkia has provided to PNM.*

Lighting Levels & Dark Sky Protection

The program has increased lighting levels on the roadways across Santa Fe without increasing up lighting through using dark sky friendly luminaires.



Service

Self-Detection

Self-Detection allows Dalkia to proactively monitor the System and respond to outages as quickly as possible. The minimum allowable percentage of self-reported (Smart Node) outages is 75%. This month, the self-detection ratio exceeded this at 97.9%.

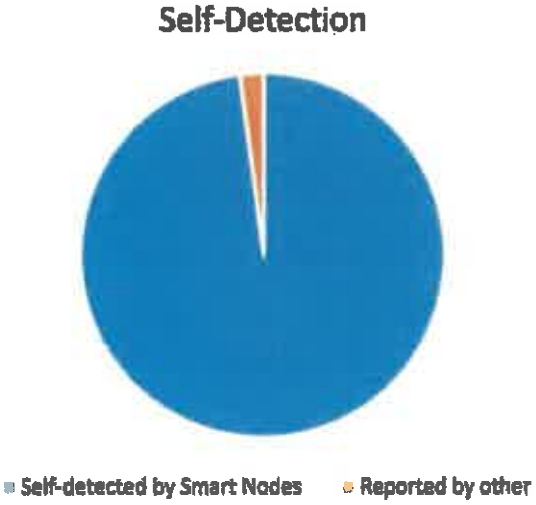

New Lights Detected Out & Open Cases

During the month, 47 incidents were detected or reported out. The table below summarizes the breakdown by fault type along with other new open cases:

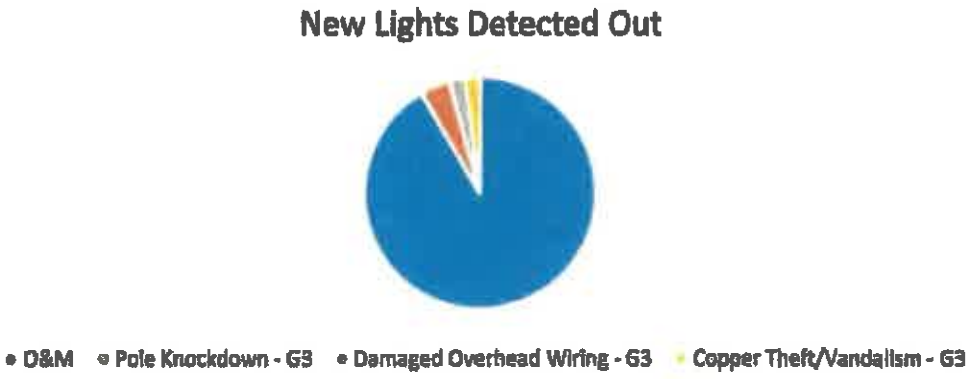

Cases have been opened for all detected outages. For specific inquiries, reach out to Dalkia.

O&M and Repairs Activity

During the previous month, 41 outages were addressed through routine operation and maintenance. Additionally, 8 outages were resolved through unscheduled maintenance.

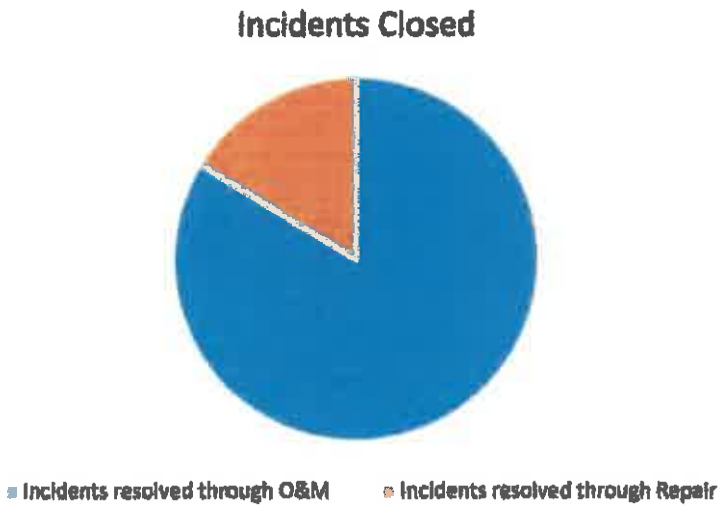

Outage Rate

The outage rate (Ko) is the number of assets out during a given month compared to the total number of existing assets. This KPI measures the maintenance program's efficiency in proactively servicing the System to prevent outages and should be below 2.00%. This month, Ko was 1.1%.



Availability of the Assets

The KPI for the availability of the assets (Ka) measures the average percentage of time that the System is operating on a monthly basis. Dalkia reviews each street light individually to calculate the number of days that each street light is operating and functioning within the respective month.

$$K_a = \frac{\sum_i^N \left(\frac{d_i}{D_a}\right)}{N}$$

$$N = number\ of\ assets\ in\ inventory\ during\ given\ month$$
$$d_i = number\ of\ days\ a\ given\ fixture\ was\ out\ during\ given\ month$$
$$D_a = number\ of\ days\ in\ given\ month$$

Dalkia is responsible for maintaining Ka at 2% or less, such that the average availability of the assets meets or exceeds 98%. During this month, availability was 99.7%.

Operational KPI Summary Table

Category	Sub-Category	Designation	Commitment	Unit	Periodicity	Actual
Energy	Consumptions	Ke- Guaranteed Annual Savings	2,234,042	kWh	Annually	2,563,317
Operations and Maintenance	Operation & Maintenance	Km - Accuracy of CMMS database	97%	% of assets	Monthly	100%
	Maintenance	Kc - Outage Rate	Less than 2%	% of assets	Monthly	1.1%
	Maintenance	Ka - Availability of the assets	More than 98%	% of assets	Monthly	99.7%
	Operations	Ks - Self Detection	More than 75%	% of tickets	Monthly	97.9%
	Operations	Kt - Emergency Response Time	3 Hours	Hour	Per occurrence	0.5
	Operations	Kd1 - Delay of Unscheduled Maintenance or Repairs - single SL*	5 Days	Business Day	Per occurrence	2.6
	Operations	Kd2 - Delay of Unscheduled Maintenance or Repairs - more than 3 single lights in a row	2 Days	Business Day	Per occurrence	N/A
	Operations	Kd3 - Delay of Unscheduled Maintenance or Repairs - Poles, Arms & Foundation	8 Weeks	Standard Week	Per occurrence	4.1
	Operations	Kq - Monthly Report	One Report	Report	Monthly	1
	Operations	Klp - Lighting Performance	100%	% of IES standard values	Annually	N/A
	Operations	Kw - Average Installed Wattage	84	Watts	Annually	82.8

Financial Reporting

Operations & Maintenance

The annual Services payment, adjusted annually to reflect the applicable CPI, is $186,774.12 before applicable tax. This is invoiced in monthly installments of $15,564.51 before applicable tax.

Repairs

Repairs are considered separate scopes of work and, in accordance, independent from the annual Services payment.

During this month, Dalkia completed the pole knockdown at E Alameda St & Shelby St.

Report Number	Location	Pre-tax Total
SF23-029	E Alameda St & Shelby St	$4,764.34

Additional Work

There are currently no additional projects.

City of Santa Fe

Summary of Contract, Agreement, Amendment & Lease

All applicable fields to be completed by department (complete 1.b only if you are processing an amendment):

1.a Munis Contract: 3204540 Procurement # (RFP/ITB# If any): _____

Contractor: Public Service Company of New Mexico (PNM)

Procurement Method: *Small Purchase* *RFP* *ITB* *Sole Source* *GSA* *Cooperative* Exempt ☑

Description/Title: LED Streetlight Conversion for approx 1,100 PNM owned streetlights to meet Roadway Lighting Standards.

Contract: ☐ Agreement: ☑ Lease/Rent: ☐ Amendment: ☐

Term Start Date: _____ Term End Date: TBD Total Contract Amount: $568,511

☐ Approved by Council *(If over the City Manager's approval threshold, you must go through GB)* TBD

Contract / Lease:

1.b Amendment #: _____ to the Original Contract/Lease # _____

Increase/(Decrease) Amount $: _____

Extend Expiration Date to: _____

☐ Approved by Council *(If the original went through GB, all amendments must go through GB regardless of the amendment reason)* Date: _____

Amendment is for:

2. **HISTORY of Contract, Amendments & Lease / Rent - Please Elaborate** (option: attach spreadsheet if multiple amendments)
04/14/2021 - GB approved contract with PNM to convert 2,000 PNM owned streetlights to LED's

3. Procurement History: Exempt Procurement (NMSA13-1-98.D)

_____ Feb 15, 2024
Purchasing Officer Review: Date:

Comment & Exceptions: _____

4. Funding Source: CIP Resource Conservation Org / Object: 3159980-572970

Andy Hopkins Feb 15, 2024
Budget Officer Approval: Date:

Comment & Exceptions: _____

5. Grant History (If applicable): N/A

Grants Administrator Approval: _____ Date _____

Staff Contact who Completed This Form: Amanda Archuleta Phone #: 505-955-6631

To be recorded by City Clerk:
Clerk # _____ Email: ajarchuleta@santafenm.gov
Date of Execution: _____

_____
ITT Representative (attesting that all information is reviewed) Title Date

CITY OF SANTA FE PROCUREMENT CHECKLIST

Contractor Name: PNM (Public Service Company of New Mexico)

Procurement/contract Title: Streetlight Conversion to LED's

Procurement Method: ☐Sole Source ☐State Price Agreement/Existing ☐ Cooperative

☐Request For Proposals(RFP) ☐Invitation To Bid (ITB) ☒Exempt: 13-1-98.D

☐Small Purchase (Contract Under $60,000) ☐Other: _____

Requesting Department: Public Works Staff Name: Mike Dalmolin

Procurement Requirements:

Procurement files shall be maintained for all purchases and contracts, regardless of the method of procurement. The procurement files shall contain the basis on which the awards are made, all submitted bids/proposals, all evaluation materials (bid tabs or Evaluation Committee Reports), scoresheets, quotations, and all other documentation related to or prepared in conjunction with evaluations, negotiations, and the award processes. The procurements shall contain written determinations from the Requesting Departments, signed by the Chief Procurement Officers (this document), setting forth the reasoning for the contract award decisions before submitting them to the Committees.

REQUIRED DOCUMENTS FOR APPROVAL BY PURCHASING

YES	N/A		YES	N/A	
☒	☐	Written Determination (srvs)	☐	☒	Quote(s) (3 Valid & Current for Over 20k)
☐	☒	RFP (include ECR)	☐	☒	BAR
☐	☒	ITB (include bid tab)	☐	☒	FIR
☐	☒	Other: _____	☐	☐	Certificate of Insurance (srvs)
☐	☐	Cooperative Agreements and GSAs and Statewide Price Agreements (include the cover page to show valid date, scope page, and items to be purchased)			
☐	☒	Horizon Declination or Screenshot of horizonsofnewmexico.org/services.html (srvs)			
☒	☐	Summary of Contract (only on contracts)			
☐	☐	Current Business Registration (always)			
☒	☐	Executed Contract or Price Agreement (legal and contractor must sign before purchasing approves)			
☐	☒	Chief Procurement Officer (or designee) Approval for Exempt from Procurement (use memo on our site)			
☐	☒	Evaluation Committee Report (RFPs only)			
☐	☒	Signed Sole Source Determination, Vendor Written Quote, SS Letter from Contractors, and 30 Days Email			
☐	☒	>20k = Memo addressed to City Manager (Under 150K) Committees/City Council (Over 150K)			

Mike Dalmolin — Department Point of Contact

Traffic Operations Engineering Supervisor — Title

01/30/2024 — Date

_____ — Department Director — Date

_____ — Chief Procurement Officer — Feb 15, 2024 — Date

_____ — ITT Representative — Title — Date

CoSF

Version 2 10.17.2023

24-0120 Public Service Company of New Mexico - PNM

Final Audit Report 2024-02-29

Created:	2024-02-29
By:	Xavier Vigil (xivigil@ci.santa-fe.nm.us)
Status:	Signed
Transaction ID:	CBJCHBCAABAAisq9AG-j3HFasdrPeCUDbsRyHrH5b6mt

"24-0120 Public Service Company of New Mexico - PNM" History

Document created by Xavier Vigil (xivigil@ci.santa-fe.nm.us)
2024-02-29 - 9:58:45 PM GMT- IP address: 63.232.20.2

Document emailed to Alan Webber (amwebber@santafenm.gov) for signature
2024-02-29 - 10:00:07 PM GMT

Email viewed by Alan Webber (amwebber@santafenm.gov)
2024-02-29 - 10:17:34 PM GMT- IP address: 104.28.123.135

Document e-signed by Alan Webber (amwebber@santafenm.gov)
Signature Date: 2024-02-29 - 10:17:53 PM GMT - Time Source: server- IP address: 63.232.20.2

Document emailed to Geralyn Cardenas (gfcardenas@santafenm.gov) for signature
2024-02-29 - 10:17:54 PM GMT

Email viewed by Geralyn Cardenas (gfcardenas@santafenm.gov)
2024-02-29 - 10:43:31 PM GMT- IP address: 104.47.64.254

Document e-signed by Geralyn Cardenas (gfcardenas@santafenm.gov)
Signature Date: 2024-02-29 - 10:43:39 PM GMT - Time Source: server- IP address: 63.232.20.2

Agreement completed.
2024-02-29 - 10:43:39 PM GMT

Powered by Adobe Acrobat Sign

ACORD

CERTIFICATE OF LIABILITY INSURANCE

DATE (MM/DD/YYYY)
3/4/2024

THIS CERTIFICATE IS ISSUED AS A MATTER OF INFORMATION ONLY AND CONFERS NO RIGHTS UPON THE CERTIFICATE HOLDER. THIS CERTIFICATE DOES NOT AFFIRMATIVELY OR NEGATIVELY AMEND, EXTEND OR ALTER THE COVERAGE AFFORDED BY THE POLICIES BELOW. THIS CERTIFICATE OF INSURANCE DOES NOT CONSTITUTE A CONTRACT BETWEEN THE ISSUING INSURER(S), AUTHORIZED REPRESENTATIVE OR PRODUCER, AND THE CERTIFICATE HOLDER.

IMPORTANT: If the certificate holder is an ADDITIONAL INSURED, the policy(ies) must have ADDITIONAL INSURED provisions or be endorsed. If SUBROGATION IS WAIVED, subject to the terms and conditions of the policy, certain policies may require an endorsement. A statement on this certificate does not confer rights to the certificate holder in lieu of such endorsement(s).

PRODUCER Alliant Insurance Services, Inc. 701 B St 6th Fl San Diego, CA 92101	CONTACT NAME: PHONE (A/C, No, Ext): (619) 238-1828 FAX (A/C, No): E-MAIL ADDRESS:
	INSURER(S) AFFORDING COVERAGE — NAIC #
	INSURER A : Liberty Mutual Fire Insurance Company — 23035
INSURED PNM Resources, Inc. 414 Silver Ave SW Albuquerque, NM 87102	INSURER B : Liberty Insurance Corporation — 42404
	INSURER C :
	INSURER D :
	INSURER E :
	INSURER F :

COVERAGES **CERTIFICATE NUMBER:** **REVISION NUMBER:**

THIS IS TO CERTIFY THAT THE POLICIES OF INSURANCE LISTED BELOW HAVE BEEN ISSUED TO THE INSURED NAMED ABOVE FOR THE POLICY PERIOD INDICATED. NOTWITHSTANDING ANY REQUIREMENT, TERM OR CONDITION OF ANY CONTRACT OR OTHER DOCUMENT WITH RESPECT TO WHICH THIS CERTIFICATE MAY BE ISSUED OR MAY PERTAIN, THE INSURANCE AFFORDED BY THE POLICIES DESCRIBED HEREIN IS SUBJECT TO ALL THE TERMS, EXCLUSIONS AND CONDITIONS OF SUCH POLICIES. LIMITS SHOWN MAY HAVE BEEN REDUCED BY PAID CLAIMS.

INSR LTR	TYPE OF INSURANCE	ADDL INSD	SUBR WVD	POLICY NUMBER	POLICY EFF (MM/DD/YYYY)	POLICY EXP (MM/DD/YYYY)	LIMITS	
A	X COMMERCIAL GENERAL LIABILITY			EB2-641-444990-023	6/1/2024	6/1/2025	EACH OCCURRENCE	$ 1,000,000
	CLAIMS-MADE X OCCUR						DAMAGE TO RENTED PREMISES (Ea occurrence)	$ 1,000,000
							MED EXP (Any one person)	$ Excluded
							PERSONAL & ADV INJURY	$ 1,000,000
	GEN'L AGGREGATE LIMIT APPLIES PER:						GENERAL AGGREGATE	$ 10,000,000
	POLICY X PRO-JECT X LOC						PRODUCTS - COMP/OP AGG	$ 10,000,000
	X OTHER: $SIR: $1,000,000							$
A	AUTOMOBILE LIABILITY			AS2-641-444990-135	6/1/2024	6/1/2025	COMBINED SINGLE LIMIT (Ea accident)	$ 1,000,000
	X ANY AUTO						BODILY INJURY (Per person)	$
	OWNED AUTOS ONLY / SCHEDULED AUTOS						BODILY INJURY (Per accident)	$
	HIRED AUTOS ONLY / NON-OWNED AUTOS ONLY						PROPERTY DAMAGE (Per accident)	$
								$
	UMBRELLA LIAB OCCUR						EACH OCCURRENCE	$
	EXCESS LIAB CLAIMS-MADE						AGGREGATE	$
	DED RETENTION $							$
B	WORKERS COMPENSATION AND EMPLOYERS' LIABILITY			WA7-64D-444990-033	6/1/2024	6/1/2025	X PER STATUTE OTH-ER	
	ANY PROPRIETOR/PARTNER/EXECUTIVE OFFICER/MEMBER EXCLUDED? (Mandatory in NH) Y / N: N	N / A					E.L. EACH ACCIDENT	$ 1,000,000
	If yes, describe under DESCRIPTION OF OPERATIONS below						E.L. DISEASE - EA EMPLOYEE	$ 1,000,000
							E.L. DISEASE - POLICY LIMIT	$ 1,000,000

DESCRIPTION OF OPERATIONS / LOCATIONS / VEHICLES (ACORD 101, Additional Remarks Schedule, may be attached if more space is required)

CERTIFICATE HOLDER

City of Santa Fe Public Works Dept
801 W. San Mateo
Santa Fe, NM 87505

CANCELLATION

SHOULD ANY OF THE ABOVE DESCRIBED POLICIES BE CANCELLED BEFORE THE EXPIRATION DATE THEREOF, NOTICE WILL BE DELIVERED IN ACCORDANCE WITH THE POLICY PROVISIONS.

AUTHORIZED REPRESENTATIVE

© 1988-2015 ACORD CORPORATION. All rights reserved.
The ACORD name and logo are registered marks of ACORD

CITY OF SANTA FE

Date: October 29, 2024

To: Governing Body, Finance Committee, and Public Works & Utilities Committee

From: Michael Dalmolin, PE Traffic Operations Engineer

Via: Regina Wheeler, Public Works Department Director

Subject: PNM Streetlight Conversion - Amendment #1

Vendor Name: PNM

Munis Vendor Number: 8279

ACTION:

Request for Approval of the First Amendment to The Agreement for Conversion of Streetlights Owned by the Public Service Company of New Mexico (PNM) Item #24-0120 with PNM to Complete the Conversion of Streetlights to LEDs , Increasing the Compensation by $480,000 to a new Not to Exceed Total Compensation of $1,050,000 Including NMGRT and Extending the Term for One Year.

CONTRACT NUMBER:

The FY24 Munis contract number is 3202638

BACKGROUND AND SUMMARY:

There are approximately 5,600 streetlights in the City of Santa Fe. The City owns approximately 3,500 and PNM owns most of the remaining streetlights within the City.

The conversion of City owned lights was completed in March 2022 and results in approximately 2,560,000 kWh and $230,000 of energy savings each year. LEDs reduce power consumption by 60%, have a longer life span, improve reliability, have full cutoff fixtures protecting the night sky, and can be fit with shields to reduce fugitive light trespass. The new LED streetlights are performing with high reliability, and we have seen a significant decrease in complaints.

PNM is currently completing conversion of approximately 1,100 streetlights, or about half of the PNM-owned lights within the City. Completion is expected by December 2024. The energy and maintenance savings are expected to be $135,000 per year and thus the project would pay for itself in approximately 4 years.

The City and PNM now propose to extend the project to complete the conversion of the remaining 1,000 PNM streetlights. If approved, PNM expects to begin the final phase of their streetlight conversion in early 2025 and to complete the conversion in 4-6 months. PNM's price for LED retrofits is regulated by the PRC. The cost to the City for this conversion is $480,000. A payback analysis conservatively estimates that the second phase will pay for itself within 5 years. This work is being funded by recently appropriated fund balance one time funding.

Public Engagement for the PNM Streetlight Conversion included an Early Neighborhood Notification (ENN) meeting held online on February 22nd. PNM also hosts a public webmap, allowing residents to track the progress of the conversion street by street.

Prior Approvals and Supporting Information:

PROCUREMENT METHOD:

The procurement method used was NMSA 1978, Section 13-1-98, Exempt

Since PNM, the local electric utility company, owns thee lights and PRC regulations define the conversion by PNM.

Chief Procurement Officer (CPO) / Designee: _____ **Date:** Nov 12, 2024
CPO Comment/Exceptions: _____

FUNDING SOURCE:

Fund Name/Number: 1/2 GRT / 365

Munis Org Name/Number: Roadways & Drainage / 3650414

Munis Object Name/Number: WIP Construction / 572970

Budget Officer / Designee: ALEXIS LOTERO (Nov 12, 2024 10:45 MST) **Date:** Nov 12, 2024
Budget Officer Comment/Exceptions: _____

ASSOCIATED APPROVALS:

Does this purchase require any of the following associated approvals: ☐ Yes | ☐ No
(ITT, Vehicles/Fleet, Facilities, Asset, Grant Review)

IT Components included? ☐ Yes | ☒ No
Approval: _____ **Title:** _____ **Date:** _____
Comment/Exceptions: _____

Vehicles included? ☐ Yes | ☒ No
Approval: _____ **Title:** _____ **Date:** _____
Comment/Exceptions: _____

Construction, Facilities, Furniture, Fixtures, Equipment included? ☒ Yes | ☐ No
Approval: _____ **Title:** _____ **Date:** _____
Comment/Exceptions: _____

Capital Asset* or Project ☒ Yes | ☐ No**
Project Ledger #: STREETLTS
(*will this procurement result in a tangible item that costs more than $5,000?)
(**Capital Projects are new and improvement projects that are going to cost $10,000 or more)
Approval: Lisa Storey (Nov 12, 2024 12:23 MST) **Title:** Accounting Manager **Date:** Nov 12, 2024
Comment/Exceptions: to be determined. Most lights are not owned by City, but the project will benefit the city & pay for itself over 5 years.

Is this a Grant Funded Purchase? ☐ Yes | ☒ No
Approval: _____ **Title:** _____ **Date:** _____
Comment/Exceptions: _____

ATTACHMENTS:

Procurement Document: Choose an item.

Vendor's Proposal

Goods/General Services Contract

Original contract packet
First Contract Amendment with Public Service Company of New Mexico
City of Santa Fe Roadway Lighting Guidelines

Reviewed by Halona Crowe

Docusign Envelope ID: 74D8647D-72EF-4265-9E97-E3F751986F87

FIRST AMENDMENT TO THE AGREEMENT FOR CONVERSION OF STREETLIGHTS OWNED BY THE PUBLIC SERVICE COMPANY OF NEW MEXICO Item #24-0120

This First Amendment to the Agreement for Conversion of Streetlights Owned by the Public Service Company of New Mexico ("First Amendment"), executed as of October ___, 2024, is by and between the Public Service Company of New Mexico, a New Mexico corporation ("PNM" or "Company"), and the City of Santa Fe ("Santa Fe" or "City"), a municipal corporation. The Parties may be referred to herein individually as "Party" or collectively as "Parties."

RECITALS

WHEREAS the Parties executed the Agreement for the Conversion of Streetlights Owned by the Public Service Company of New Mexico ("Agreement") in February of 2024;

WHEREAS the Agreement contemplated the conversion of some of the Company's streetlights into light-emitting diode ("LED") lights ("LED Streetlight Conversion Project");

WHEREAS Santa Fe has asked PNM to complete a second phase of the LED Streetlight Conversion Project, which will consist of converting an additional 957 streetlights into LED lights;

WHEREAS the City has appropriated the funds necessary to complete the second phase of the LED Streetlight Conversion Project, which PNM estimates to be Four Hundred Eighty Thousand Dollars and Zero Cents ($480,000.00); and

WHEREAS the Parties wish to amend the Agreement to contemplate the completion of the second phase of the LED Streetlight Conversion Project and payment for same by Santa Fe.

AGREEMENT

NOW, THEREFORE, in consideration of the mutual covenants herein contained, the receipt and sufficiency of which are hereby acknowledged, the Parties hereby agree to the following:

1. Paragraph 3(a) shall be amended as follows:

   Santa Fe agrees to issue a Purchase Order to PNM in the amount of Four Hundred Eighty Thousand Dollars and Zero Cents ($480,000.00) including applicable GRT for the completion of the second phase of the LED Conversion Project, which shall consist of the conversion of 957 additional streetlights into LED lights. The total amount of compensation, including the amount for the original agreement, shall not exceed $1,050,000.00 including GRT.
   The Purchase Order shall memorialize in writing Santa Fe's request that PNM convert the 957 additional Company-owned streetlights to LED lights within the City of Santa Fe in accordance with the Rate Tariff, the Agreement, and this First Amended Agreement. PNM will share with Santa Fe certain information regarding

Docusign Envelope ID: 74D8647D-72EF-4265-9E97-E3F751986F87

Company-owned streetlights, if needed, so that Santa Fe can prepare the Purchase Order contemplated by this section. Such information includes the number of Company-owned streetlights, the geographic location of Company-owned streetlights, and the types of Company-owned streetlights, categorized by light wattage. PNM will also provide Santa Fe with the cost of a conversion to an LED by listing the cost per operational substitute on Appendix A. Santa Fe agrees to include within the Purchase Order the information required by Section 3(b) of the Agreement.

2. Paragraph 1(k) shall be added to the Agreement. Paragraph 1(k) shall state as follows:

   PNM will make a good faith effort to complete the second phase of the LED Conversion Project within twelve (12) months of the execution of the First Amendment to the Agreement, although the Company cannot guarantee an exact date of completion, as such date is likely to fluctuate, and the City recognizes that the estimated timeline may change due to the lead time necessary for procuring fixtures from the manufacturer, which PNM currently estimates to be approximately 6 weeks.

Section 3. All capitalized terms used in this First Amendment and not otherwise defined or modified herein shall have the meanings set forth in the Agreement.

Section 4. Except as expressly amended by this First Amendment, all other terms of the Agreement shall remain in full force and effect.

Section 5. This First Amendment may be executed in one or more counterparts, including by facsimile or electronic signature, but each such counterpart shall be deemed an original and all such counterparts shall be deemed one and the same instrument.

Section 6. This First Amendment contains the entire understanding of the Parties and supersedes all prior agreements and understandings between the Parties relating to the subject matter herein. This First Amendment shall be binding upon and inure to the benefit of the Parties' respective successors and permitted assigns.

[Signature Page Follows]

Docusign Envelope ID: 74D8647D-72EF-4265-9E97-E3F751986F87

CITY OF SANTA FE

By: _____

Alan Webber
Mayor, City of Santa Fe, New Mexico

Attest:

_____
Geralyn Cardenas, Interim City Clerk

City Attorney's Office:

Marcos Martinez
Marcos Martinez (Oct 29, 2024 13:09 MDT)
_____
Senior Assistant City Attorney

Approved for Finances:

Emily K. Oster
_____
Emily Oster, Finance Director

PUBLIC SERVICE COMPANY OF NEW MEXICO

Signed by:
By: _____
B51818D1E09D410...

Mike Mertz
PNM Vice President, New Mexico Operations

City of Santa Fe
New Development
Roadway Lighting Guidelines

SUMMARY

1. Roadway luminaires must meet the following requirements:

Roadway Type	Correlated Color Temperature (Kelvin)	Input Wattage Range (W)	Nominal Lumen Output (lumen) +/- 10%	Minimum Color Rendering Index	IES Distribution	Visual Comfort Refractor	IES TM-15 Backlight, Uplight, and Glare Rating		
							B	U	G
Residential	2700K	28-45	4,000	70	Type 2	Required	1	0	1
Local/Collector	3000K	90-100	8,900	70	Type 2 or Type 3	Required	2	0	2
Major	3000K	190-200	20,000	70	Type 2 or Type 3	Not required	3	0	3

Luminaires must be fitted with a Ubicquia Ubicell control. Full specifications are in Appendix B.

2. Pole and arm composition varies by area in the City of Santa Fe. To expedite approval, seek recommendations based on proposed construction location from the City's street lighting maintenance provider, Dalkia Energy Solutions.

3. Submit a package with the following components
    a. Plans indicating the location, type, and height of both building and ground mounted luminaires; and
    b. Specification sheets for proposed luminaires, arms, poles, foundations, supports, shielding devices, and smart controls; and
    c. Photometric data: provide photometric showing footcandles on the ground or luminaire .ies files with .dwg of proposed layouts. (Examples included in Appendix A)

Submit package to City Traffic Engineer and the City's street lighting maintenance provider, Dalkia Energy Solutions. A response will be provided within five business days.

Jeanne Wolfenbarger <jawolfenbarger@santafenm.gov>
Matt O'Brien <matt.obrien@dalkiasolutions.com>

Appendix A:

EXAMPLE ROADWAY PHOTOMETRICS

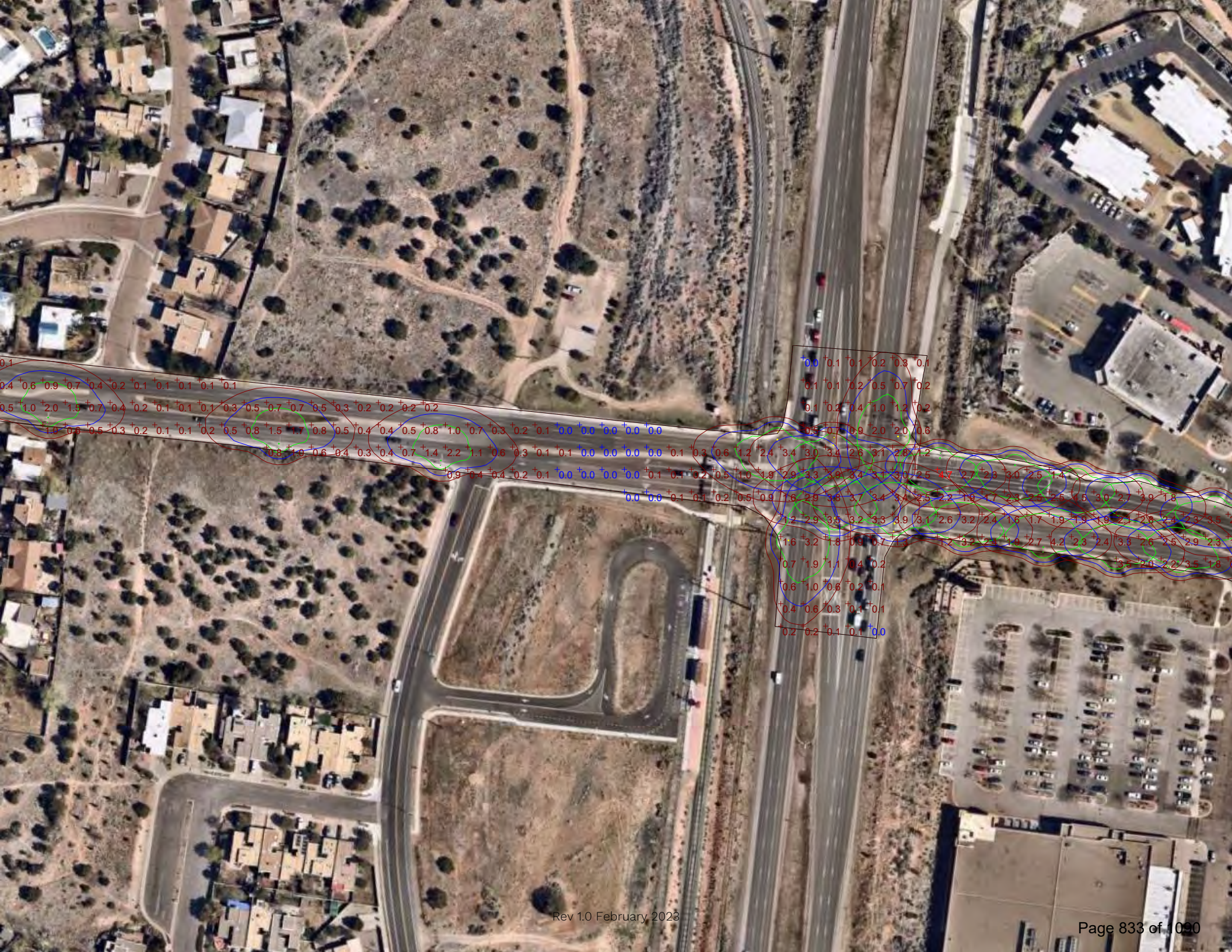

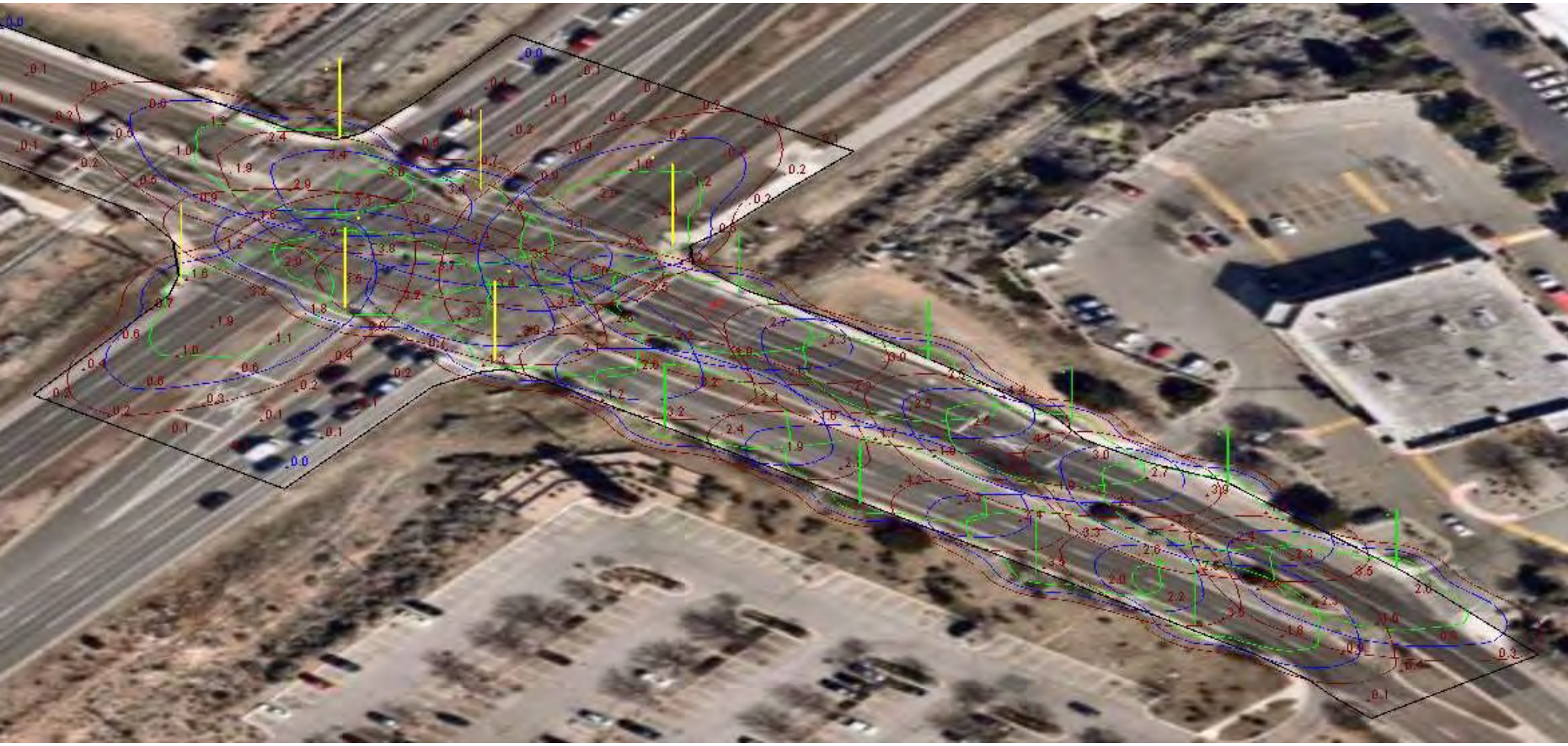

Current View

Appendix B:

COMMUNITY-GUIDED SMART STREET LIGHTING DESIGN SPECIFICATIONS

City of Santa Fe

Department of Public Works

Community-Guided Smart Street Lighting Design Specifications

The City of Santa Fe seeks to convert its existing street lighting assets to smart LED technology in order to "reduce light pollution, reduce or prevent glare, reduce or prevent light trespass, conserve energy, promote a sense of safety and security, and ensure aesthetically appropriate outdoor lighting in keeping with the character of Santa Fe." - (City of Santa Fe Ord. No. 2011-37 § 10)

Following the Community-Guided Design phase outlined in its Global Management Contract with Dalkia, the Department of Public Works is recommending to the Governing Body the smart lighting design summarized in the below table and described with detailed specifications in the following pages.

Roadway Type	Correlated Color Temperature (Kelvin)	Input Wattage Range (W)	Nominal Lumen Output (lumen) +/- 10%	Minimum Color Rendering Index	IES Distribution	Visual Comfort Refractor	IES TM-15 Backlight, Uplight, and Glare Rating		
							B	U	G
Residential	2700K	28-45	4,000	70	Type 2	Required	1	0	1
Local/Collector	3000K	90-100	8,900	70	Type 2 or Type 3	Required	2	0	2
Major	3000K	190-200	20,000	70	Type 2 or Type 3	Not required	3	0	3

Roadway Type	Number of Fixtures	Percentage of Total
Residential	3,137	58%
Local/Collector	1,578	29%
Major	697	13%

In order to develop this Community-Guided Smart Lighting Design Plan, Dalkia worked with multiple stakeholders, including PNM, and compiled various sets of data; evaluated various products and performed a comprehensive set of photometric analyses; gathered community feedback from multiple channels; and combined all analyses into this recommendation. The final plan is designed to be actionable and to provide results in line with the Sustainable Santa Fe 25-Year Plan and the City of Santa Fe's expectations. The City of Santa Fe and Dalkia will work together to develop a dimming strategy to further increase energy savings and dark-sky protection, aligned with dark-sky best practices.

Part A: STREET LIGHTING LIGHT EMITTING DIODE (LED) LUMINAIRE SPECIFICATIONS

1.0 REFERENCES

The publications listed below form a part of this specification to the extent referenced. Publications are referenced within the text by their basic designation only. Versions listed shall be superseded by updated versions as they become available.

1.1 American National Standards Institute (ANSI)
- A. C136.2 (Most current), American National Standard for Roadway and Area Lighting Equipment—Luminaire Voltage Classification
- B. C136.10-2010 (Most current), American National Standard for Roadway and Area Lighting Equipment Locking-Type Photocontrol Devices and Mating Receptacle Physical and Electrical Interchangeability and Testing
- C. C136.15-2011 (Most current), American National Standard for Roadway and Area Lighting Equipment Luminaire Field Identification
- D. C136.25-2009 (Most current), American National Standard for Roadway and Area Lighting Equipment Ingress Protection (Resistance to Dust, Solid Objects and Moisture) for Luminaire Enclosures
- E. C136.31-2010 (Most current), American National Standard for Roadway Lighting Equipment – Luminaire Vibration.
- F. C136.41

1.2 American Society for Testing and Materials International (ASTM)
- A. B117-09 (Most current), Standard Practice for Operating Salt Spray (Fog) Apparatus
- B. D1654-08 (Most current), Standard Test Method for Evaluation of Painted or Coated Specimens Subjected to Corrosive Environments
- C. D523-08 (Most current), Standard Test Method for Specular Gloss
- D. G154-06 (Most current), Standard Practice for Operating Fluorescent Light Apparatus for UV Exposure of Nonmetallic Materials

1.3 Council of the European Union (EC)
- A. RoHS Directive 2002/95/EC, on the restriction of the use of certain hazardous substances in electrical and electronic equipment

1.4 Illuminating Engineering Society of North America (IESNA or IES)
- A. DG-4-03 (Most current), Design Guide for Roadway Lighting Maintenance
- B. HB-10-11 (Most current), IES Lighting Handbook, 10th Edition
- C. LM-50-99 (Most current), IESNA Guide for Photometric Measurement of Roadway Lighting Installations
- D. LM-61-06 (Most current), IESNA Approved Guide for Identifying Operating Factors Influencing Measured Vs. Predicted Performance for Installed Outdoor High Intensity Discharge (HID) Luminaires
- E. LM-79-08 (Most current), IESNA Approved Method for the Electrical and Photometric Measurements of Solid-Sate Lighting Products
- F. LM-80-08 (Most current), IESNA Approved Method for Measuring Lumen Maintenance of LED Light Sources
- G. RP-8-18 (Most current), ANSI / IESNA American National Standard Practice for Roadway Lighting

H. RP-16-10 (Most current), ANSI/IES Nomenclature and Definitions for Illuminating Engineering
I. TM-3-95 (Most current), A Discussion of Appendix E - "Classification of Luminaire Lighting Distribution," from ANSI/IESNA RP-8-83
J. TM-15-11 (Most current), Luminaire Classification System for Outdoor Luminaires
K. TM-21-11 (Most current), Projecting Long Term Lumen Maintenance of LED Light Sources

1.5 National Electrical Manufacturers Association (NEMA)
A. ANSI/NEMA/ANSLG C78.377-2008 (or latest), American National Standard for the Chromaticity of Solid State Lighting Products

1.6 National Fire Protection Association (NFPA)
A. 70 – National Electrical Code (NEC)

1.7 Underwriters Laboratories (UL)
A. 1449, Surge Protective Devices
B. 1598, Luminaires.
C. 8750, Light Emitting Diode (LED) Equipment for Use in Lighting Products LED Roadway Specification

1.8 CSA
1. 1598, Luminaires

2.0 GENERAL CONSTRUCTION

2.1 Shall be compliant with CSA C22.2 No. 250.0-08 – UL 1598 Harmonized Std.

2.2 Luminaire housing to be fabricated from die cast aluminum low copper content alloy.
A. Luminaire housing to act as passive heat sink for LED Array.
B. Housing to be designed in such a manner that debris build-up with-in “heat-fin” structure will not significantly impact lamp lumen depreciation (LLD).
C. Luminaire finish and casting to be tested to ASTM B117 salt fog, and must maintain a scribe creepage rating of 8 per ASTM D1654 after 5000 hours.
D. Access to electrical compartment shall be tool-less by means of a thumb screw.
E. Tool-less access should accommodate user wearing electrical gloves.

2.3 LED light engine
A. Shall be IP66 rated (provide 0% uplight and restrict backlight to within sidewalk depth).
B. Lens shall be created from borosilicate glass.

2.4 Luminaire Attachment
A. Luminaire shall be able to attach to 1 ¼” and/or 2” IPS schedule 40 mast arms (1 5/8” to 2 3/8” OD).
B. Luminaire shall be designed to be able to tilt +/- 5 degrees from horizontal.
C. Luminaire shall be designed to withstand 3G vibration testing prescribed in ANSI C136.31.
D. Luminaire shall include internal integral leveling bubble to assist in the installation.

2.5 Luminaire Markings
A. Shall have external wattage label affixed on underside of luminaire to be seen from ground per ANSI C136.15.
B. Luminaire shall have internal label indicating manufacturer’s name, product name, input voltage and date of manufacture.

2.6 Wildlife shield shall be a cast in feature (not a separate component).

3.0 ELECTRICAL

3.1 All electrical components shall be terminated through the use of quick disconnect couplings.

- A. There shall not be any wire nuts supplied in the luminaire
- B. All luminaires shall be equipped with a 3 station tunnel style terminal block for terminating supply wire.
  1. Terminal block shall accommodate up to 6 AWG conductors.
  2. For ease of installation, the terminal block shall be positioned in such a manner that supply wires do not need to bent or re-routed around components to make electrical termination.
- C. Luminaire shall provide means to protect LED driver and LED lighting array from electrical transients caused by electrical storms or capacitor switching by means of surge protection device.
  1. Surge Protection Device (SPD) shall be UL1449 recognized.
  2. SPD shall be 3 wire and provide both common and differential mode protection.
  3. SPD must have an inductive filter circuit that reduces the amount of energy passed thru to electronics during a surge event.
  4. Surge protection device shall be rated to protect the luminaire up to 10kV/5kA combination wave surges in accordance with ANSI C136.2 (Most Current).
  5. Surge protection shall be thermally fused.
  6. Failure mode of surge protection is to leave luminaire off.
- D. LED Driver shall meet the following minimum requirements
  1. LED Driver shall have a minimum power factor of 90% at full load.
  2. LED Driver THD shall be less than 20% at full load.
  3. LED Driver shall comply with the requirements of UL, CSA, FCC47 subpart 15
  4. LED Driver maximum case temperature shall not be exceeded when luminaire is operating in a 40C ambient.
  5. LED Driver shall be RoHS compliant
  6. LED Driver shall have in ingress protection rating IP66.
- E. Photocontrol receptacle shall comply with ANSI C136.10 for standard 7 PIN configurations. When using smart controls receptacle shall comply with ANSI C136.41.

4.0 LIFE

4.1 Component rated life shall be a minimum of 20 years (or 100,000 hours) when operating in a continuous 25C ambient.

4.2 The design life of the LED array (based on LM80/TM21) shall be defined as L80 at 98,000 hours operation in an ambient of 25C.

5.0 WARRANTY

5.1 Luminaire shall be warranted to be free from manufacturing defects for a minimum period of 10 years.

6.0 LED LUMINAIRE PERFORMANCE

6.1 Residential Roadway LED Luminaires

- A. Correlated Color Temperature (CCT) shall be nominally rated at 2700 Kelvin CCT.
- B. Luminaire input wattage shall be between 28 watts and 45 watts.

C. Luminaire nominal lumen output shall be between 4000 lumens and 5000 lumens.
D. Minimum Color Rendering Index (CRI) shall be 70.
E. Luminaire shall have a distribution pattern consistent with IES RP-8-18 Type II Distribution.
F. Luminaire shall have a maximum BUG rating per IES TM-15 of B1-U0-G1.
G. Product shall have a visual comfort glare reduction refractor.

6.2 Local/Collector Roadway LED Luminaires
A. Correlated Color Temperature (CCT) shall be nominally rated at 3000 Kelvin CCT.
B. Luminaire input wattage shall be between 90 watts and 120 watts.
C. Luminaire nominal lumen output shall be between 8000 lumens and 12000 lumens.
D. Minimum Color Rendering Index (CRI) shall be 70.
E. Luminaire shall have a distribution pattern consistent with IES RP-8-18 Type II or Type III Distribution.
F. Luminaire shall have a maximum BUG rating per IES TM-15 of B2-U0-G2.
G. Product shall have a visual comfort glare reduction refractor.

6.3 Major Roadway LED Luminaires
A. Correlated Color Temperature (CCT) shall be nominally rated at 3000 Kelvin CCT.
B. Luminaire input wattage shall be between 190 watts and 260 watts.
C. Luminaire nominal lumen output shall be between 20000 lumens and 24000 lumens.
D. Minimum Color Rendering Index (CRI) shall be 70.
E. Luminaire shall have a distribution pattern consistent with IES RP-8-18 Type II or Type III Distribution.
F. Luminaire shall have a BUG rating per IES TM-15 of B3-U0-G3.
G. Product shall be Design Lights Consortium (DLC) qualified.

Part 2: SMART CONTROLS

One of the use-cases for smart controls technology on the city's street lighting infrastructure is dimming capability. Dimming control will allow luminaires to be adjusted as an additional mechanism to increase energy savings and dark-sky protection.

7.0 Smart Node Technology

7.1 Node shall have twist-lock controller compatibility with 3, 5 or 7 pin NEMA socket receptacle.
7.2 Node shall utilize AES 128/256-bit encryption in its communication security.
7.3 Node shall function with a 0-10V, DALI or DALI2 driver and will provide a dimming circuit with a range of 0% to 100%.
7.4 Node shall have a single SKU to handle both low voltage and high voltage.
7.5 Node shall have a minimum of 10KV/5KA power surge protection and a single power supply range for 90V to 506V line voltage.
7.6 Node shall have a minimum IP66 rating to withstand harsh weather conditions with a -30C to +70C (-22F to +158F) operating temperature range.
7.7 Node shall utilize LTE CAT-1 cellular communication per module and provide advanced lighting and IoT functions and services to include, but not limited to, Tilt, Scheduling, Dynamic Dimming, Asset Management, GPS, Outage Notification, Traffic Trends, Beaconing, and Utility Grade Power Metering accuracy of ANSI C12.20 Class + or - 0.5.
7.8 Node must have a 10-year warranty and include 10 years of Software as a Service and connectivity.

Appendix C:

EXISTING CITY EQUIPMENT SPECIFICATIONS SHEETS

LUMINAIRE
SPECIFICATIONS SHEETS

Autobahn Series ATBS
Roadway & Security Lighting

Consistent with LEED® goals & Green Globes™ criteria for light pollution reduction

PRODUCT OVERVIEW



Applications:

Residential streets
Parking lots
General security lighting

DIMENSIONS

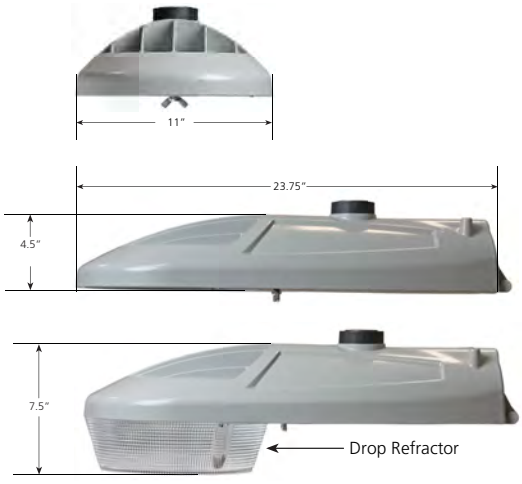

Effective Projected Area (EPA) The EPA for the ATBS is 0.3 sq. ft.,
Approx. Wt. = 12 lbs. (5 kg)

STANDARDS

DesignLights Consortium® (DLC) qualified product. Not all versions of this product may be DLC qualified. Please check the DLC Qualified Products List at www.designlights.org/QPL to confirm which versions are qualified.

Color temperatures of ≤ 3000K must be specified for International Dark-Sky Association certification.

Rated for -40°C to 40°C ambient
CSA Certified to U.S. and Canadian standards
Complies with ANSI: C136.2, C136.10, C136.14, C136.31, C136.15, C136.37

Features:

OPTICAL

Same Light: Performance is comparable to 100W – 200W HPS and up to 175W Mercury Vapor roadway and security lighting luminaires.

White Light: Correlated color temperature - 4000K, 70 CRI minimum, 3000K, 70 CRI minimum or optional 5000K, 70 CRI minimum.

IP66 rated borosilicate glass optics ensure longevity and minimize dirt depreciation. Unique IP66 rated LED light engines provide 0% uplight and restrict backlight to within sidewalk depth, providing optimal application coverage and optimal pole spacing.

Available distributions are Type II, III, and V roadway distributions. When used with the optional acrylic refractor the unit provides approximately 10% uplight and increased vertical foot-candles

ELECTRICAL

Expected Life: LED light engines are rated >100,000 hours at 25°C, L70. Electronic driver has an expected life of 100,000 hours at a 25°C ambient.

Lower Energy: Saves an expected 40-60% over comparable HID luminaires.

Standard surge protection is 20kV/10kA "Extreme Level" per ANSI C136.2. An optional MOV pack provides 10kV/5kA "Enhanced Level".

MECHANICAL

Includes standard AEL lineman-friendly features such as tool-less entry, 3 station terminal block and quick disconnects. Bubble level located inside the electrical compartment for easy leveling at installation.

Rugged die-cast aluminum housing and door are polyester powder-coated for durability and corrosion resistance. Rigorous five-stage pre-treating and painting process yields a finish that achieves a scribe creepage rating of 8 (per ASTM D1654) after over 5000 hours exposure to salt fog chamber (operated per ASTM B117).

Mast arm mount is adjustable for arms from 1-1/4" to 2" (1-5/8" to 2-3/8" O.D.) diameter. The 2 – bolt clamping mechanism provides 3G vibration rating per ANSI C136.31.

The Wildlife shield is cast into the housing (not a separate piece).

CONTROLS

NEMA 3 pin photocontrol receptacle is standard, with the Acuity designed ANSI standard 7 pin receptacles optionally available.

Premium solid state locking-style photocontrol – PCSS (10 year rated life) Extreme long life solid state locking-style photocontrol – PCL1 (20 year rated life)

Optional onboard Adjustable Output module allows the light output and input wattage to be modified to meet site specific requirements, and also can allow a single fixture to be flexibly applied in many different applications.

Note: Actual performance may differ as a result of end-user environment and application. Specifications subject to change without notice.

© 2014-2021 Acuity Brands Lighting, Inc.

ORDERING INFORMATION

Series

ATBS Autobahn LED Roadway & Security

Performance Packages

P10 5,500 lumens
P20 6,800 lumens
P30 8,300 lumens
P40 9,400 lumens
P50 10,800 lumens
P60[4] 11,850 lumens

Voltage

MVOLT Multi-volt, 120-277V
347 347V
480 480V

Optics

R2 Roadway Type II
R3 Roadway Type III
R5 Roadway Type V
D3 Type III, Drop Refractor included
D5 Type V, Drop Refractor included

Options

Color Temperature (CCT)
(Blank) 4000K CCT, 70 CRI Min.
3K 3000K CCT, 70 CRI Min.
5K 5000K CCT, 70 CRI Min.

Paint
Blank Gray (Standard)
BK Black
WH White
BZ Bronze

Surge Protection
Blank Standard 20kV/10kA SPD
MP MOV Pack 10kV/5kA

Misc.
HS House Side Shield
NL NEMA Label
XL Not CSA Certified
VR[3] Visual Comfort Optic
UMR-XX 8" Horizontal Arm for Round Pole, Painted to match Fixture
UMS-XX 8" Horizontal Arm for Square Pole, Painted to match Fixture
UMR-GALV 8" Horizontal Arm for Round Pole, Painted to match Fixture
UMS-GALV 8" Horizontal Arm for Square Pole, Painted to match Fixture

Controls
(Blank) 3 Pin NEMA Photocontrol Receptacle
NR[1] No Photocontrol Receptacle
DM[2] 0V-10V Dimmable Driver
P7 7 Pin Photocontrol Receptacle (dimmable driver included)
PCSS[1] DTL DSS Photocontrol
PCL1[1] DTL DLL Photocontrol 120-277V
AO Field Adjustable Output
SH Shorting Cap

Packages
(Blank) Standard Pack
JP Job Pack (54/pallet)

Install Packages
PKGS DTL DSS Photocontrol
PKGL DTL DLL Photocontrol
Packages ship with selected photocontrol, 24", 1 1/4" diameter arm, 5' of prewire and mounting hardware

Accessories
ATBSREF Drop Refractor for field installation
ATBSHSS House Side Shield for field installation
ATBSLTS Light Trespass Shield for field installation
ATBS LOUVER KIT Louver Kit for field installation
ATBSVR-XX Visual Comfort Refractor and painted skirt for field installation

Notes
1. Not available with Install Packages.
2. Not available with AO option.
3. Not available with D3 or D5 option.
4. Not available with 347V and 480V supply voltage options.

American Electric Lighting
AEL Headquarters, 3825 Columbus Road, Granville, OH 43023
www.americanelectriclighting.com
© 2014-2021 Acuity Brands Lighting, Inc. All Rights Reserved. Rev. 04/08/21 ATBS

Warranty Five-year limited warranty. Complete warranty terms located at: www.acuitybrands.com/support/customer-support/terms-and-conditions
Actual performance may differ as a result of end-user environment and application. All values are design or typical values, measured under laboratory conditions at 25 °C. Specifications subject to change without notice.

Please contact your sales representative for the latest product information.

PERFORMANCE PACKAGE

ATBS

Performance Package	Distribution	Input Watts	3K (3000K CCT, 70 CRI)					4K/5K (4000K/5000K CCT, 70 CRI)					LLD @ 25°C		
			Lumens	LPW	B	U	G	Lumens	LPW	B	U	G	50k Hours	75k Hours	100k Hours
P10	R2	40	5,360	134	1	0	2	5,577	139	1	0	2	0.92	0.89	0.85
	R3		5,287	132	1	0	1	5,524	138	1	0	1			
	R5		5,576	139	3	0	1	5,758	144	3	0	1			
	D3		4,963	124	1	3	3	5,163	129	1	3	3			
	D5		5,372	134	2	3	3	5,590	140	2	3	3			
P20	R2	50	6,707	134	1	0	2	6,809	136	1	0	2	0.92	0.89	0.85
	R3		6,687	134	2	0	2	6,760	135	2	0	2			
	R5		6,926	139	3	0	1	7,108	142	3	0	1			
	D3		6,496	130	2	3	4	6,244	125	1	3	4			
	D5		7,032	141	3	4	4	7,317	146	3	4	4			
P30	R2	60	8,092	135	2	0	2	8,067	134	1	0	1	0.92	0.89	0.85
	R3		7,971	133	2	0	2	8,328	139	2	0	2			
	R5		8,470	141	3	0	2	8,760	146	3	0	2			
	D3		7,491	125	2	3	4	7,795	130	2	3	4			
	D5		8,110	135	3	4	4	8,438	141	3	4	4			
P40	R2	70	9,138	131	2	0	2	9,533	136	2	0	2	0.92	0.89	0.85
	R3		9,136	131	2	0	2	9,355	134	2	0	2			
	R5		9,868	141	3	0	2	9,710	139	3	0	2			
	D3		8,460	121	2	3	4	8,802	126	2	3	5			
	D5		9,158	131	3	4	5	9,529	136	3	4	5			
P50	R2	82	10,628	130	2	0	3	10,829	132	2	0	3	0.92	0.89	0.85
	R3		10,624	130	2	0	2	10,826	132	2	0	2			
	R5		11,450	140	4	0	2	11,181	136	4	0	2			
	D3		10,143	124	2	4	5	10,553	129	2	4	5			
	D5		10,651	130	3	4	5	11,082	135	3	4	5			
P60	R2	92	11,050	120	2	0	3	11,848	129	2	0	3	0.92	0.89	0.85
	R3		10,911	119	2	0	2	11,862	129	2	0	2			
	R5		12,199	133	4	0	2	12,756	139	4	0	2			
	D3		10,230	111	2	4	5	10,644	116	2	4	5			
	D5		11,074	120	3	4	5	11,523	125	3	4	5			

ATBS with VR

Performance Package	Distribution	Input Watts	3K (3000K CCT, 70 CRI)					4K/5K (4000K/5000K CCT, 70 CRI)					LLD @ 25°C		
			Lumens	LPW	B	U	G	Lumens	LPW	B	U	G	50k Hours	75k Hours	100k Hours
P10	R2 with VR	40	4,450	111	1	0	1	4,561	114	1	0	1	0.92	0.89	0.85
	R3 with VR		4,273	107	1	0	1	4,605	115	1	0	1			
	R5 with VR		4,539	113	2	0	1	4,679	117	2	0	1			
P20	R2 with VR	50	5,491	110	1	0	1	5,550	111	1	0	1	0.92	0.89	0.85
	R3 with VR		5,379	108	1	0	1	5,582	112	2	0	1			
	R5 with VR		5,647	113	2	0	1	5,692	114	2	0	1			
P30	R2 with VR	60	6,479	108	2	0	1	6,530	109	2	0	1	0.92	0.89	0.85
	R3 with VR		6,400	107	2	0	1	6,564	109	2	0	1			
	R5 with VR		6,703	112	3	0	1	6,693	112	2	0	1			
P40	R2 with VR	70	7,307	104	2	0	1	7,561	108	2	0	1	0.92	0.89	0.85
	R3 with VR		7,347	105	2	0	1	7,638	109	2	0	1			
	R5 with VR		7,693	110	3	0	1	7,749	111	3	0	1			
P50	R2 with VR	82	8,552	104	2	0	2	8,711	106	2	0	2	0.92	0.89	0.85
	R3 with VR		8,494	104	2	0	1	8,814	107	2	0	1			
	R5 with VR		8,895	108	3	0	1	8,911	109	3	0	1			
P60	R2 with VR	92	8,989	98	2	0	2	9,815	107	2	0	2	0.92	0.89	0.85
	R3 with VR		8,899	97	2	0	1	9,857	107	2	0	2			
	R5 with VR		9,309	101	3	0	1	10,256	111	3	0	1			

Note: Individual fixture performance may vary. Specifications subject to change without notice.

© 2014-2021 Acuity Brands Lighting, Inc. All Rights Reserved.

Warranty Five-year limited warranty. Complete warranty terms located at: www.acuitybrands.com/support/customer-support/terms-and-conditions
Actual performance may differ as a result of end-user environment and application.
All values are design or typical values, measured under laboratory conditions at 25 °C.
Specifications subject to change without notice.

Please contact your sales representative for the latest product information.

UMR POLE ADAPTOR

RECOMMENDED FOR USE WITH POLES OF 4" DIAMETER OR SMALLER

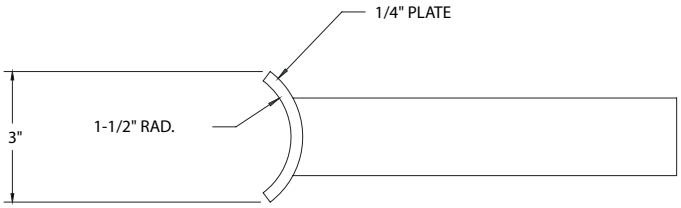

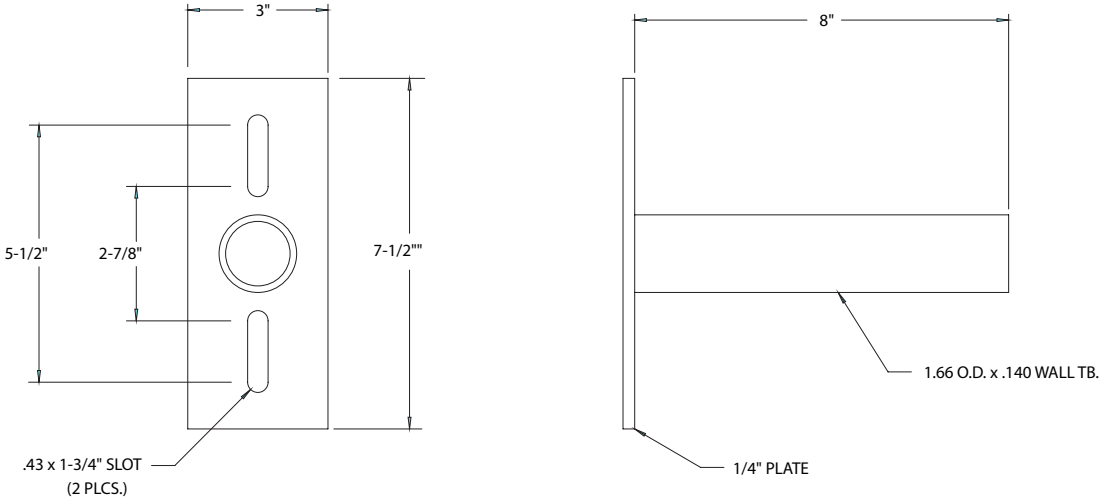

UMS POLE ADAPTOR

© 2014-2021 Acuity Brands Lighting, Inc. All Rights Reserved.

Warranty Five-year limited warranty. Complete warranty terms located at: www.acuitybrands.com/support/customer-support/terms-and-conditions
Actual performance may differ as a result of end-user environment and application.
All values are design or typical values, measured under laboratory conditions at 25 °C.
Specifications subject to change without notice.

Please contact your sales representative for the latest product information.

Consistent with LEED® goals & Green Globes™ criteria for light pollution reduction

Autobahn Series ATBM
Roadway

PRODUCT OVERVIEW

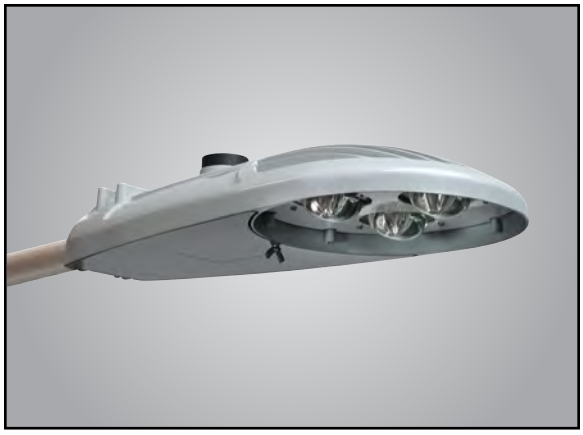

Applications:

Residential streets
Parking lots
High speed roadways

DIMENSIONS

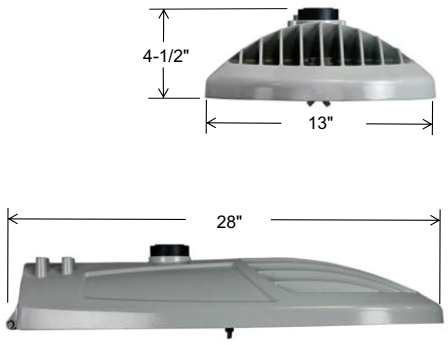

Effective Projected Area (EPA)
The EPA for the ATBM is 0.3 sq. ft.,
Approx. Wt. = 21 lbs. (9.5 kg)

STANDARDS

Color temperatures of ≤ 3000K must be specified for International Dark-Sky Association certification.

Rated for -40°C to 40°C ambient
CSA Certified to U.S. and Canadian standards
Complies with ANSI: C136.2, C136.10, C136.14, C136.31, C136.15, C136.37

Features:

OPTICAL

Same Light: Performance is comparable to 150W – 250W HPS

White Light: Correlated color temperature - 4000K, 70 CRI minimum, 3000K, 70 CRI minimum or optional 5000K, 70 CRI minimum.

IP66 rated borosilicate glass optics ensure longevity and minimize dirt depreciation. Unique IP66 rated LED light engines provide 0% uplight and restrict backlight to within sidewalk depth, providing optimal application coverage and optimal pole spacing.

Available distributions are Type II, III, IV, & V roadway distributions.

DualOptix™ visual comfort option is also available for all distributions.

ELECTRICAL

Expected Life: LED light engines are rated >100,000 hours at 25°C, L70. Electronic driver has an expected life of 100,000 hours at a 25°C ambient.

Lower Energy: Saves an expected 40-60% over comparable HID luminaires.

Robust Surge Protection: Standard surge protection is 20kV/10kA "Extreme Level" per ANSI C136.2. An optional MOV pack provides 10kV/5kA "Enhanced Level.

MECHANICAL

Includes standard AEL lineman-friendly features such as tool-less entry, 3 station terminal block and quick disconnects. Bubble level located inside the electrical compartment for easy leveling at installation.

Rugged die-cast aluminum housing and door are polyester powder-coated for durability and corrosion resistance. Rigorous five-stage pre-treating and painting process yields a finish that achieves a scribe creepage rating of 8 (per ASTM D1654) after over 5000 hours exposure to salt fog chamber (operated per ASTM B117).

Mast arm mount is adjustable for arms from 1-1/4" to 2" (1-5/8" to 2-3/8" O.D.) diameter. The 2 – bolt and optional 4 bolt clamping mechanism provide 3G vibration rating per ANSI C136.31.

The Wildlife shield is cast into the housing (not a separate piece).

CONTROLS

NEMA 3 pin photocontrol receptacle is standard, with the Acuity designed ANSI standard 7 pin receptacle optionally available.

Premium solid state locking-style photocontrol – PCSS (10 year rated life) Extreme long life solid state locking-style photocontrol – PCL1 (20 year rated life).

Extreme long life solid state locking-style photocontrol with on demand remote on/off control - PCCC (15 year rated life).

Optional onboard Adjustable Output module allows the light output and input wattage to be modified to meet site specific requirements, and also can allow a single fixture to be flexibly applied in many different applications.

ORDERING INFORMATION

Series	Performance Packages	Voltage	Optics	Mounting
ATBM Autobahn LED Roadway	**P05** 9,700 lumens **P10** 11,000 lumens **P20** 12,800 lumens **P30** 15,500 lumens **P40** 17,400 lumens **P50** 18,700 lumens **P60** 20,000 lumens **P70** 21,500 lumens	**MVOLT** Multi-volt, 120-277V **347** 347V **480** 480V	**R2** Roadway Type II **R3** Roadway Type III **R4** Roadway Type IV **R5** Roadway Type V	**(Blank)** 2 Bolt Mounting **4B** 4 Bolt Mounting

Options

Color Temperature (CCT)
- **(Blank)** 4000K CCT, 70 CRI Min.
- **3K** 3000K CCT, 70 CRI Min.
- **5K** 5000K CCT, 70 CRI Min.

Paint
- **(Blank)** Gray
- **BK** Black
- **BZ** Bronze
- **DDB** Dark Bronze
- **GI** Graphite
- **WH** White

Surge Protection
- **(Blank)** Standard 20kV/10kA SPD
- **MP** MOV Pack

Miscellaneous Options
- **HSS** House Side Shield
- **NL** NEMA Label Indicating Wattage
- **XL** Not CSA Certified – No Terminal Block Cover
- **VR**[5] Dual Optix visual comfort
- **UMR-XX** 8" Horizontal Arm for Round Pole, Painted to match Fixture
- **UMS-XX** 8" Horizontal Arm for Square Pole, Painted to match Fixture
- **UMR-GALV** 8" Horizontal Arm for Round Pole, Galvanized
- **UMS-GALV** 8" Horizontal Arm for Square Pole, Galvanized

Control Options
- **(Blank)** 3 Pin NEMA Photocontrol Receptacle
- **P7** 7 Pin Photocontrol Receptacle (dimmable driver included) [1]
- **NR** No Photocontrol Receptacle
- **AO** Field Adjustable Output [3]
- **DM** 0-10V Dimmable Driver [2]
- **PCSS** Solid-State Lighting Photocontrol [4]
- **PCLL** Solid-State Long Life Photocontrol
- **PCCC** Solid-State Long Life Photocontrol with remote control on/off [4]
- **SH** Shorting Cap

Packages
- **(Blank)** Standard Pack
- **JP** Job Pack (36/pallet)

Accessories
- **ATBMHSS** House Side Shield
- **ATBMLTS** Light Trespass Shield
- **RKATBMMVOLTSPD** ATBM Acuity SPD, MVOLT
- **RKATBMHVSPD** ATBM Acuity SPD, 347/480V
- **RKATBMMVOLTMP** ATBM MOV Pack, MVOLT
- **RKATBMHVMP** ATBM MOV Pack, 347/480V

Notes:
1. Dimmable Driver included. Not available with DM or NR.
2. Controls by others. Not available with P7 or AO.
3. Not available with DM.
4. MVOLT only.
5. VR option does not provide zero uplight performance.

American Electric Lighting®
AEL Headquarters, 3825 Columbus Road, Granville, OH 43023
www.americanelectriclighting.com
© 2014-2021 Acuity Brands Lighting, Inc. All Rights Reserved. 03/10/21

Warranty Five-year limited warranty. Complete warranty terms located at: www.acuitybrands.com/support/warranty/terms-and-conditions
Actual performance may differ as a result of end-user environment and application. Specifications subject to change without notice.

Please contact your sales representative for the latest product information.

PERFORMANCE PACKAGE

Performance Package	Distribution	Input Watts	3K (3000K CCT, 70 CRI)					4K/5K (4000K/5000K CCT, 70 CRI)					LLD @ 25°C		
			Lumens	LPW	B	U	G	Lumens	LPW	B	U	G	25k Hours	75k Hours	100k Hours
P05	R2	68	9,396	138	1	0	2	9,718	143	1	0	2	0.93	0.86	0.83
	R3		9,366	138	1	0	3	9,688	142	1	0	3			
	R4		9,030	133	1	0	3	9,340	137	1	0	3			
	R5		10,334	152	3	0	2	10,689	157	3	0	2			
P10	R2	81	10,635	131	2	0	3	11,299	139	2	0	3	0.93	0.86	0.83
	R3		10,675	132	2	0	3	11,302	140	2	0	3			
	R4		10,391	128	2	0	4	10,994	136	2	0	4			
	R5		11,504	142	3	0	2	12,086	149	3	0	2			
P20	R2	94	12,073	128	2	0	3	12,874	137	2	0	3	0.93	0.86	0.83
	R3		12,065	128	2	0	3	12,818	136	2	0	3			
	R4		11,946	127	2	0	4	12,525	133	2	0	4			
	R5		13,085	139	4	0	2	13,776	147	4	0	2			
P30	R2	118	14,637	124	2	0	3	15,514	131	2	0	3	0.93	0.86	0.83
	R3		14,631	124	2	0	3	15,452	131	2	0	3			
	R4		14,317	121	2	0	4	15,151	128	2	0	5			
	R5		15,775	134	4	0	2	16,685	141	4	0	2			
P40	R2	135	16,233	120	2	0	3	17,493	130	2	0	3	0.93	0.86	0.83
	R3		16,402	121	2	0	3	17,367	129	2	0	3			
	R4		15,911	118	2	0	5	17,008	126	2	0	5			
	R5		17,507	130	4	0	2	18,595	138	4	0	2			
P50	R2	152	17,541	115	2	0	3	18,748	123	2	0	3	0.93	0.86	0.83
	R3		17,677	116	2	0	4	18,712	123	2	0	4			
	R4		17,154	113	2	0	5	18,246	120	2	0	5			
	R5		19,008	125	4	0	2	20,088	132	4	0	2			
P60	R2	168	18,770	112	2	0	3	20,095	120	3	0	3	0.93	0.86	0.83
	R3		18,830	112	2	0	4	20,094	120	3	0	4			
	R4		18,369	109	2	0	5	19,648	117	2	0	5			
	R5		20,350	121	4	0	2	21,505	128	4	0	2			
P70	R2	190	20,190	106	3	0	3	21,565	114	3	0	3	0.93	0.86	0.83
	R3		20,142	106	3	0	4	21,504	113	3	0	4			
	R4		19,660	103	2	0	5	21,024	111	3	0	5			
	R5		21,988	116	4	0	2	23,076	121	4	0	2			

Note: Individual fixture performance may vary. Specifications subject to change without notice.

© 2014-2021 Acuity Brands Lighting, Inc. All Rights Reserved. 03/10/21

Warranty Five-year limited warranty. Complete warranty terms located at:
www.acuitybrands.com/support/warranty/terms-and-conditions
Actual performance may differ as a result of end-user environment and application.
Specifications subject to change without notice.

Please contact your sales representative for the latest product information.

PERFORMANCE PACKAGE

ATBM with DualOptix	Distribution	Input Watts	3000K					4000K/5000K					LDD @ 25°C		
			Lumens	LPW	B	U	G	Lumens	LPW	B	U	G	50k Hours	75k Hours	100k Hours
P05	R2 with VR	68	8,323	122	2	3	3	8,609	127	2	3	3	0.93	0.86	0.83
	R3 with VR		8,296	122	2	3	3	8,581	126	2	3	3			
	R4 with VR		7,998	118	2	3	4	8,273	122	2	3	4			
	R5 with VR		9,154	135	3	3	3	9,468	139	3	3	3			
P10	R2 with VR	81	9,421	116	2	3	3	10,009	124	2	3	3	0.93	0.86	0.83
	R3 with VR		9,456	117	2	3	4	10,012	124	2	3	4			
	R4 with VR		9,204	114	2	3	4	9,738	120	2	3	4			
	R5 with VR		10,191	126	3	3	3	10,706	132	3	3	3			
P20	R2 with VR	94	10,694	114	2	3	4	11,404	121	2	3	4	0.93	0.86	0.83
	R3 with VR		10,687	114	2	3	4	11,354	121	2	3	4			
	R4 with VR		10,581	113	2	3	5	11,094	118	2	3	5			
	R5 with VR		11,591	123	3	3	3	12,203	130	3	3	3			
P30	R2 with VR	118	12,966	110	2	3	4	13,742	116	2	3	4	0.93	0.86	0.83
	R3 with VR		12,960	110	2	3	4	13,687	116	2	3	5			
	R4 with VR		12,681	107	2	3	5	13,420	114	2	3	5			
	R5 with VR		13,974	118	3	3	3	14,780	125	3	3	3			
P40	R2 with VR	135	14,379	107	2	3	4	15,495	115	3	3	5	0.93	0.86	0.83
	R3 with VR		14,529	108	2	3	5	15,384	114	3	3	5			
	R4 with VR		14,093	104	2	3	5	15,066	112	3	3	5			
	R5 with VR		15,508	115	3	3	3	16,471	122	4	3	3			
P50	R2 with VR	152	15,538	102	3	3	5	16,607	109	3	3	5	0.93	0.86	0.83
	R3 with VR		15,658	103	3	3	5	16,575	109	3	3	5			
	R4 with VR		15,195	100	3	3	5	16,162	106	3	3	5			
	R5 with VR		16,837	111	4	3	3	17,794	117	4	3	4			
P60	R2 with VR	168	16,626	99	3	3	5	17,800	106	3	3	5	0.93	0.86	0.83
	R3 with VR		16,679	99	3	3	5	17,799	106	3	3	5			
	R4 with VR		16,271	97	3	3	5	17,404	104	3	3	5			
	R5 with VR		18,026	107	4	3	4	19,049	113	4	3	4			
P70	R2 with VR	190	17,884	94	3	3	5	19,102	101	3	3	5	0.93	0.86	0.83
	R3 with VR		17,842	94	3	3	5	19,048	100	3	3	5			
	R4 with VR		17,415	92	3	3	5	18,623	98	3	3	5			
	R5 with VR		19,477	103	4	3	4	20,440	108	4	3	4			

© 2014-2021 Acuity Brands Lighting, Inc. All Rights Reserved. 03/10/21

Warranty Five-year limited warranty. Complete warranty terms located at:
www.acuitybrands.com/support/warranty/terms-and-conditions
Actual performance may differ as a result of end-user environment and application.
Specifications subject to change without notice.

Please contact your sales representative for the latest product information.

UMR POLE ADAPTOR

RECOMMENDED FOR USE WITH POLES OF 4" DIAMETER OR SMALLER

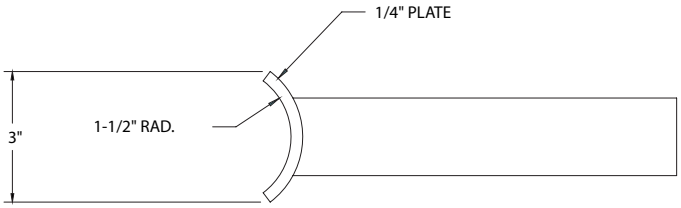

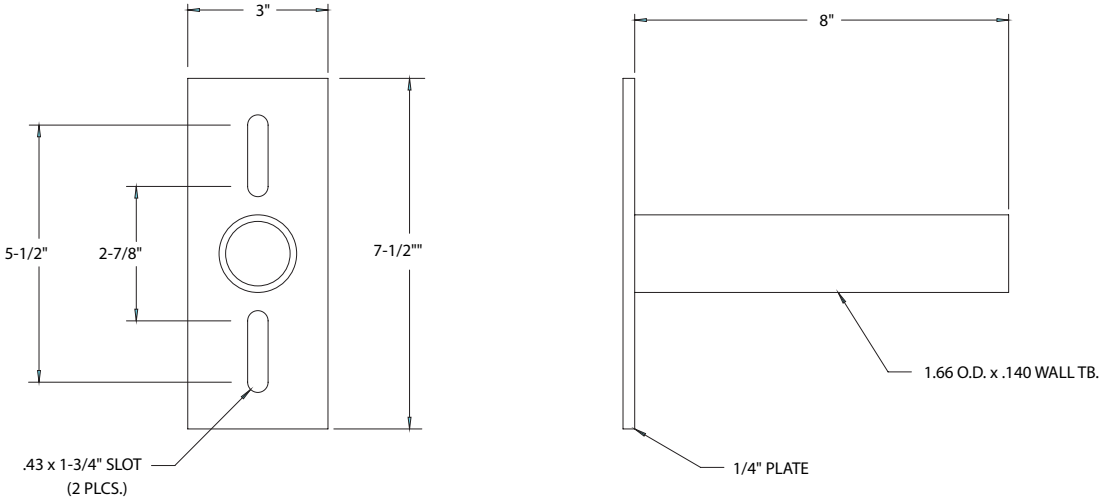

UMS POLE ADAPTOR

© 2014-2021 Acuity Brands Lighting, Inc. All Rights Reserved. 03/10/21

Warranty Five-year limited warranty. Complete warranty terms located at:
www.acuitybrands.com/support/warranty/terms-and-conditions
Actual performance may differ as a result of end-user environment and application.
Specifications subject to change without notice.

Please contact your sales representative for the latest product information.

SMART CONTROL
SPECIFICATIONS SHEETS

Ubicell Model 2.0 Smart Streetlight Controller

ubicell™

Specifications

Lamp Interface	LED, CF and HID
Lamp Power	960W@480V, 554W@277V, 480W@240V, 240W@120V
On/Off	Photocell control, software programmable
Dimming Controls	PWM, 0-10V, DALI, DALI2
Dimming Range	DIM 1 - 0-10V PWM, ability to detect stray voltage but prohibits external sensor use DIM 2 - 0-10V PWM, ability to hardwire an external sensor, but prohibits the ability to detect stray voltage DIM 3 - DALI enabled, ability to hardwire an external sensor, plus the ability to detect stray voltage
External Sensor Interface	DALI/DALI 2
Communication Module	LTE CAT-1
Location Based Services	GPS, WiFi traffic movement, Bluetooth info beacons
OTA Updates	Yes
Security	AES 128/256-bit encryption
Voltage Detection	Real-time detection of “energized” metal poles
Power Surge Protection	10KV/5KA
Power Supply	90V to 506V (50/60Hz)
Average Power Consumption	1W
IP Ratings	IP66
Impact Rating	IK07
Operating Temperature Range	-30C to +70C
Dimensions	Diameter: 82.5mm (3.25 in) Height: 98mm (3.86 in)
Weight	290 grams
Network Protocol	IPV4 and IPV6 network compliant







Utility Power Metering

Accuracy	ANSI C12.20 Class 0.5
Accuracy Verification	Infrared pulse
Line Voltage	90V to 506V (50/60Hz)
Line Voltage Accuracy	+/- 0.5%
Current Accuracy	+/- 0.5%
Power	Active/reactive/power factor
Energy Consumption	kWh
Sag & Swell Detection	Yes
On/Off Cycles	Cycle count and cycle variation (fault detection)
Running Hour	0-10 years

Programmable Parameters

- Customer device management
- Scheduling controls
- Alert thresholds
- Sunrise/sunset offsets
- Tilt detection
- Vibration detection
- Voltage detection
- Power detection
- Photocell levels
- Luminaire fault detection
- Power loss after power failure
- Network communication failure
- Wireless network configuration

Warranty

5-Year Warranty

10-Year Optional Warranty

ubicquia

APPROVED FOR PUBLIC USE

Copyright © 2020 Ubicquia, Inc. All rights reserved. Patent pending.

POLE AND ARM
SPECIFICATIONS SHEETS

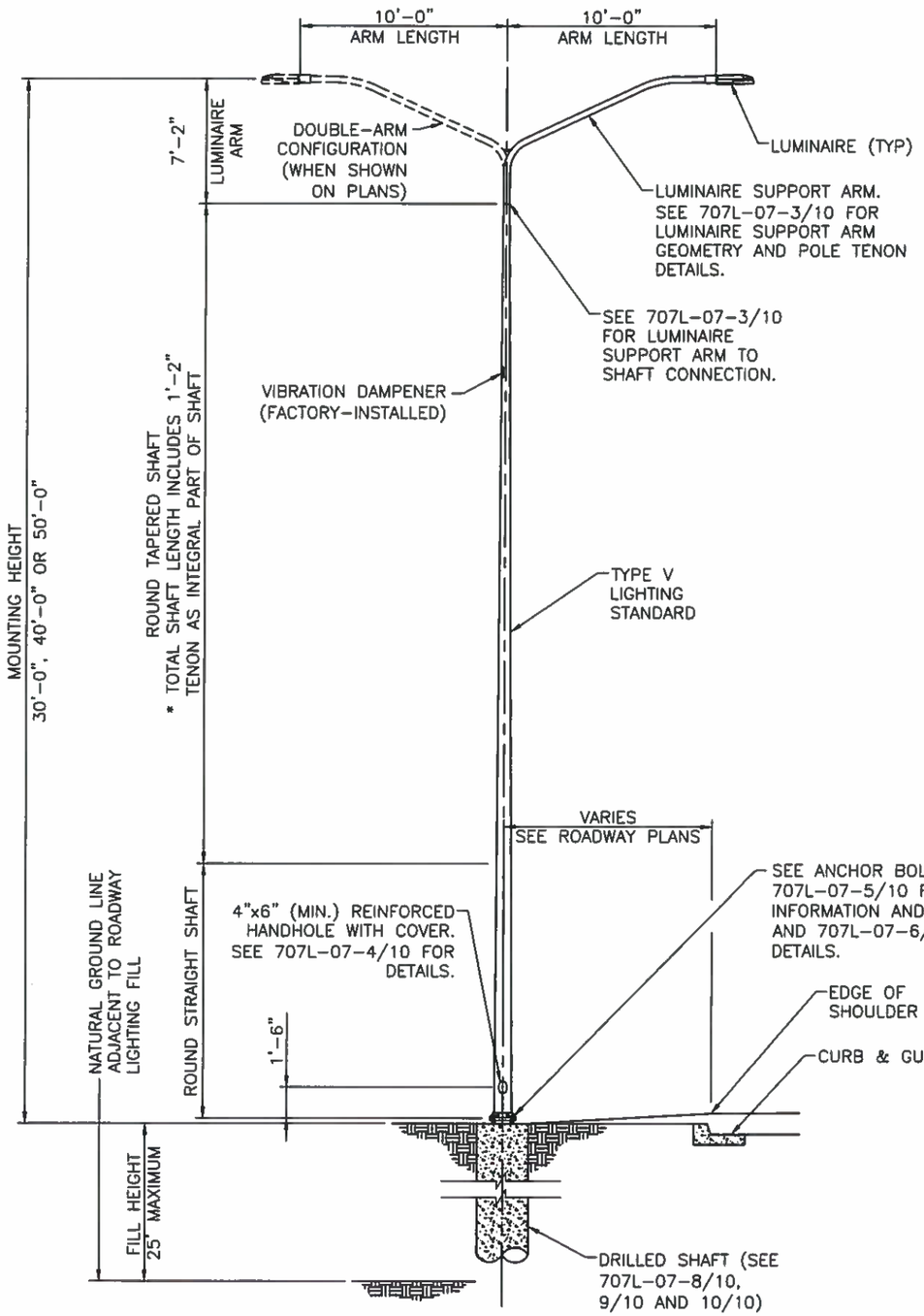

ROADWAY LIGHTING TYPE V POLE ELEVATION

NOT TO SCALE

TABLE OF VARIABLE POLE DIMENSIONS						
MOUNTING HEIGHT	ARM CONFIGURATION	MAX TAPERED SHAFT LENGTH	TOTAL SHAFT LENGTH*	OUTSIDE DIAMETER (IN)		MIN SHAFT SECTION THICKNESS (IN)
				BOTTOM	TOP	
30'-0"	SINGLE	22'-7"	24'-0"	8.00	4.50	0.156
	DOUBLE					0.219
40'-0"	SINGLE	30'-0"	34'-0"	8.00	4.50	0.25
	DOUBLE					0.375
50'-0"	SINGLE	39'-6"	44'-0"	10.00	4.50	0.25
	DOUBLE					0.375

THIS STANDARD DRAWING IS FOR USE ON NMDOT PROJECTS. OTHERS WHO USE THE NMDOT STANDARD DRAWINGS DO SO AT THEIR OWN RISK. STANDARD DRAWINGS THAT ARE APPLICABLE TO A SPECIFIC PROJECT WILL BE IDENTIFIED ON THE PROJECT PLANS BUT WILL NOT BE PHYSICALLY INCLUDED IN THOSE PLANS. THE DESIGNER WHO SPECIFIES A STANDARD DRAWING ACCEPTS THE RESPONSIBILITY OF DETERMINING THEIR APPLICABILITY.

	DATE	BY	DESCRIPTION

REVISIONS (OR CHANGE NOTICES)

JOHN MIGLIACCIO
NEW MEXICO
19258
03/19/18
PROFESSIONAL ENGINEER

NEW MEXICO DEPARTMENT OF TRANSPORTATION STANDARD DRAWING

ROADWAY LIGHTING SUPPORT STRUCTURES TYPE V

POLE ELEVATION AND DIMENSIONS

DESIGNED BY: JAZ DRAWN BY: RJK CHECKED BY: JJM

APPROVED FOR USE ON NMDOT PROJECTS: DATE: 3/22/18

707L-07-2/10 2 OF 10

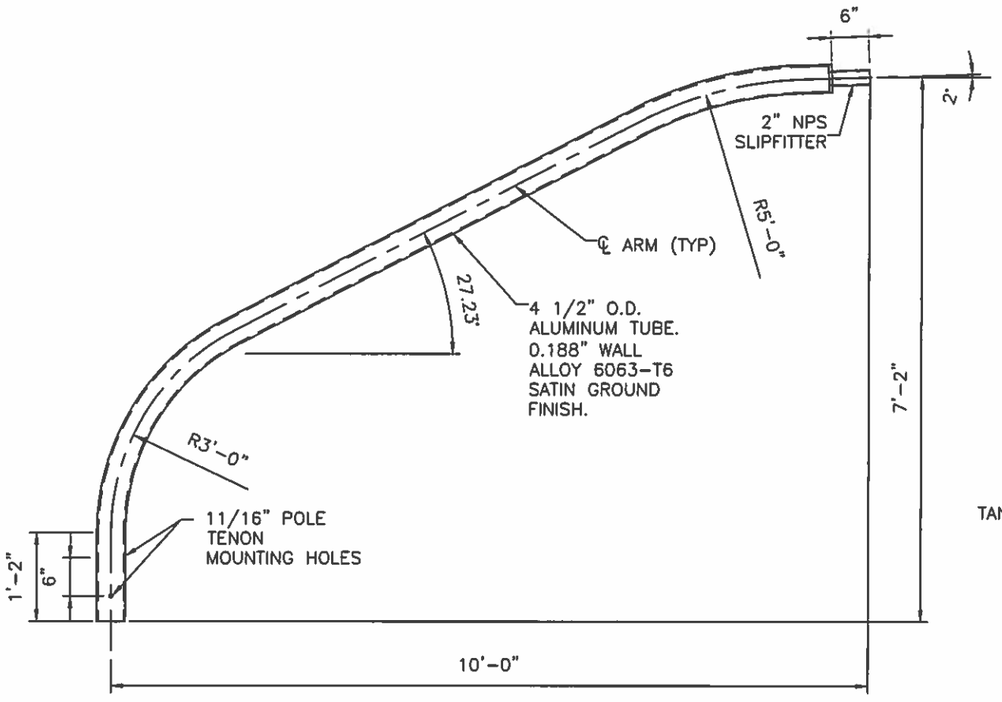

LUMINAIRE SUPPORT ARM GEOMETRY
NOT TO SCALE

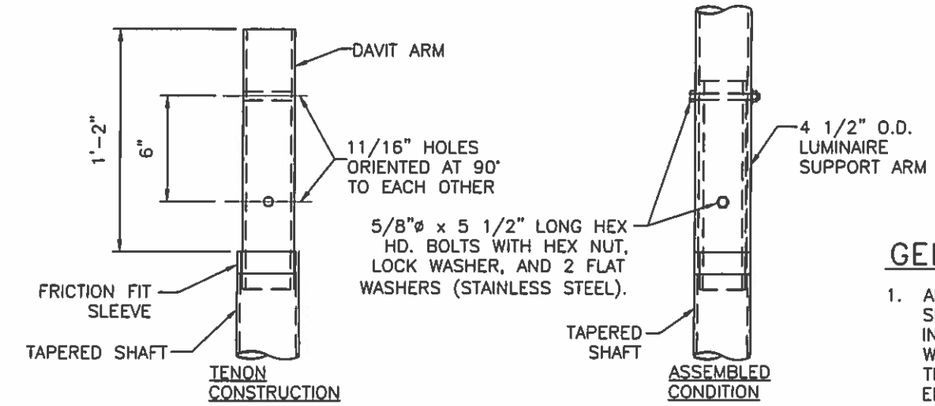

POLE TENON DETAILS
NOT TO SCALE

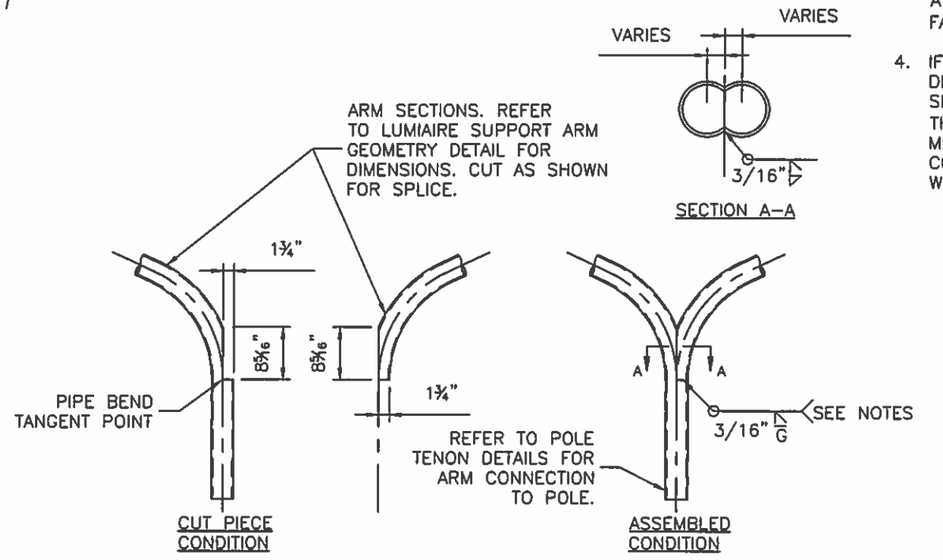

DOUBLE ARM SPLICE DETAILS
NOT TO SCALE

GENERAL NOTES

1. ARM BOTTOM CONNECTIONS AS WELL AS TOP SLIPFITTER CONNECTIONS SHALL BE FREE OF INTERNAL AND EXTERNAL OBSTRUCTIONS WHICH WOULD DAMAGE OR INTERFERE WITH WIRES OR THE PROPER OPERATION OF ANY OTHER ELECTRICAL COMPONENT.
2. ARM MEMBERS MAY TAPER FROM 4 1/2" DIAMETER AT BASE, AT FABRICATOR'S OPTION.
3. HORIZONTAL WELD AT DOUBLE-ARM SPLICE MAY A SQUARE GROOVE WELD WITH BACKING RING, AT FABRICATOR'S OPTION.
4. IF ARM CONNECTION DETAILS OTHER THAN THOSE DEPICTED HEREIN ARE PROPOSED, THE DESIGN SHALL ENSURE THAT THE CONNECTION DEVELOPS THE STRENGTH OF THE 4 1/2" DIAMETER MEMBER. DIMENSIONS OF ALTERNATE CONNECTIONS SHALL BE GENERALLY CONSISTENT WITH THE DIMENSIONS HEREIN.

THIS STANDARD DRAWING IS FOR USE ON NMDOT PROJECTS. OTHERS WHO USE THE NMDOT STANDARD DRAWINGS DO SO AT THEIR OWN RISK. STANDARD DRAWINGS THAT ARE APPLICABLE TO A SPECIFIC PROJECT WILL BE IDENTIFIED ON THE PROJECT PLANS BUT WILL NOT BE PHYSICALLY INCLUDED IN THOSE PLANS. THE DESIGNER WHO SPECIFIES A STANDARD DRAWING ACCEPTS THE RESPONSIBILITY OF DETERMINING THEIR APPLICABILITY.

	DATE	BY	DESCRIPTION

REVISIONS (OR CHANGE NOTICES)

NEW MEXICO
DEPARTMENT OF TRANSPORTATION
STANDARD DRAWING

ROADWAY LIGHTING
SUPPORT STRUCTURES
TYPE V

ARM AND TENON DETAILS

707L-07-3/10 3 of 10

JOSEPH MIGLIACCIO NEW MEXICO 19258 03/19/18 PROFESSIONAL ENGINEER

DESIGNED BY: JAZ DRAWN BY: RJK CHECKED BY: JJM

APPROVED FOR USE ON NMDOT PROJECTS: DATE: 3/22/18

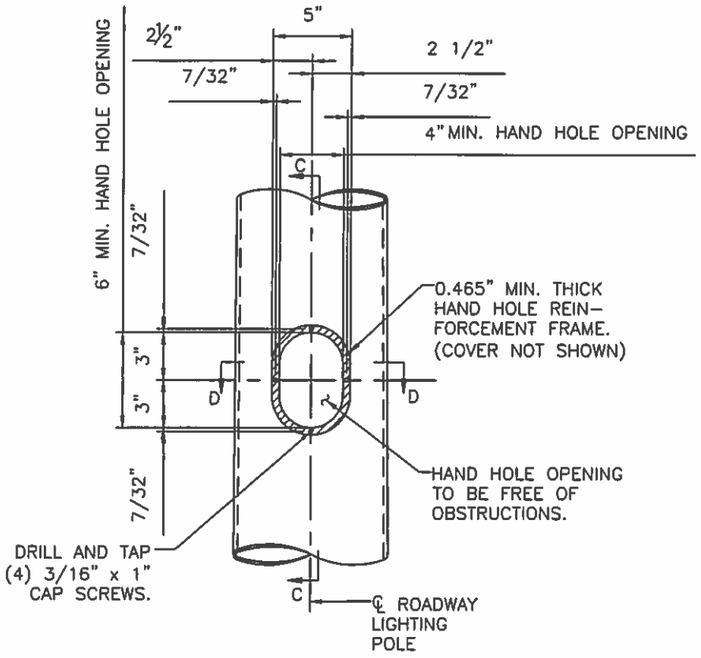

HAND HOLE DETAIL
NOT TO SCALE

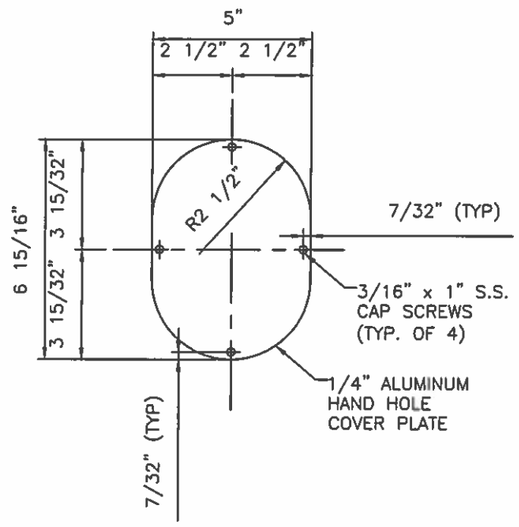

HAND HOLE COVER
NOT TO SCALE

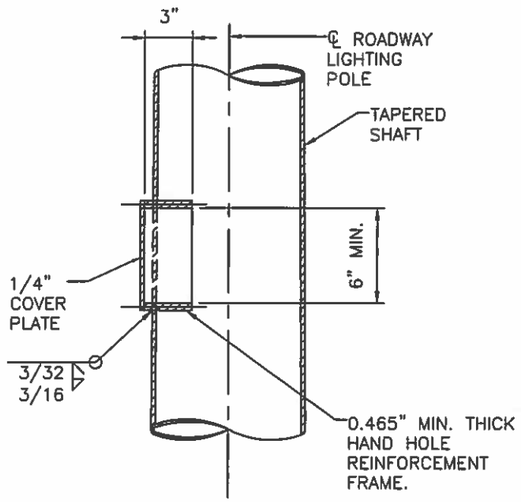

SECTION C–C
NOT TO SCALE

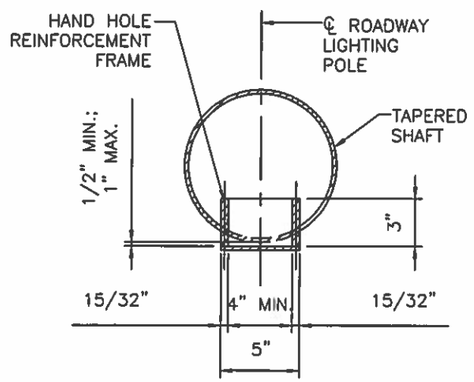

SECTION D–D
NOT TO SCALE

GENERAL NOTES

1. HANDHOLES SHALL BE FREE OF INTERNAL AND EXTERNAL OBSTRUCTIONS WHICH WOULD DAMAGE OR INTERFERE WITH WIRES OR THE PROPER OPERATION OF ANY OTHER ELECTRICAL COMPONENT.
2. HAND HOLE COVER SHALL BE FABRICATED FROM 1/4", ALLOY 6063–T6 PLATE OR MAY BE HINGED WITH A SUITABLE METHOD OF CLOSURE AS APPROVED BY THE PROJECT MANAGER.
3. HAND HOLE REINFORCEMENT FRAME SHALL BE FABRICATED FROM 15/32" (MIN) WALL TUBING, CAST ALLOY 356–T6.
4. COORDINATE LOCATIONS OF HOLES FOR CAP SCREWS IN HAND HOLE COVER PLATES WITH CONSTRUCTION OF HAND HOLE REINFORCING FRAME. TAPPED HOLES SHALL BE CENTERED IN REINFORCING FRAME RING.
5. HAND HOLES SHALL BE ORIENTED DOWNSTREAM OF ONCOMING TRAFFIC.
6. IF HAND HOLE FABRICATION DETAILS OTHER THAN THOSE DEPICTED HEREIN ARE PROPOSED, THE DESIGN SHALL ENSURE THAT SUCH HAND HOLE REINFORCEMENT SHALL STRENGTHEN POLE SHAFT SECTION TO THAT OF A SHAFT FABRICATED WITHOUT A HANDHOLE. DIMENSIONS OF ALTERNATE HAND HOLES FABRICATIONS SHALL BE GENERALLY CONSISTENT WITH THE DIMENSIONS HEREIN.

THIS STANDARD DRAWING IS FOR USE ON NMDOT PROJECTS. OTHERS WHO USE THE NMDOT STANDARD DRAWINGS DO SO AT THEIR OWN RISK. STANDARD DRAWINGS THAT ARE APPLICABLE TO A SPECIFIC PROJECT WILL BE IDENTIFIED ON THE PROJECT PLANS BUT WILL NOT BE PHYSICALLY INCLUDED IN THOSE PLANS. THE DESIGNER WHO SPECIFIES A STANDARD DRAWING ACCEPTS THE RESPONSIBILITY OF DETERMINING THEIR APPLICABILITY.

	DATE	BY	DESCRIPTION

REVISIONS (OR CHANGE NOTICES)

NEW MEXICO
DEPARTMENT OF TRANSPORTATION
STANDARD DRAWING

ROADWAY LIGHTING
SUPPORT STRUCTURES
TYPE V

HAND HOLE DETAILS

707L–07–4/10 4 of 10

JOHN MIGLIACCIO — NEW MEXICO — 19258 — 03/19/18 — PROFESSIONAL ENGINEER

DESIGNED BY: JAZ DRAWN BY: RJK CHECKED BY: JJM

APPROVED FOR USE ON NMDOT PROJECTS: DATE: 3/22/18

ANCHOR BOLT TABLE

MOUNTING HEIGHT	BOLT DIAMETER	NUMBER OF BOLTS	SLOTTED HOLE SIZE	BOLT CIRCLE DIAMETER	BOLT TEMPLATE		BASE PLATE OPENING	BASE PLATE	
								WIDTH	THICKNESS
				"B"	O.D.	I.D.	"A"	"C"	"D"
(FT)	(IN)		(IN x IN)	(IN)	(IN)	(IN)	(IN)	(IN)	(IN)
50	1.0	4	1.25 x 2.25	15.0	18.0	12.0	7.0	16.0	1.0
40	1.0	4	1.25 x 2.25	11.5	14.5	8.5	6.0	14.0	1.0
30	1.0	4	1.25 x 2.25	11.5	14.5	8.5	5.0	14.0	1.0

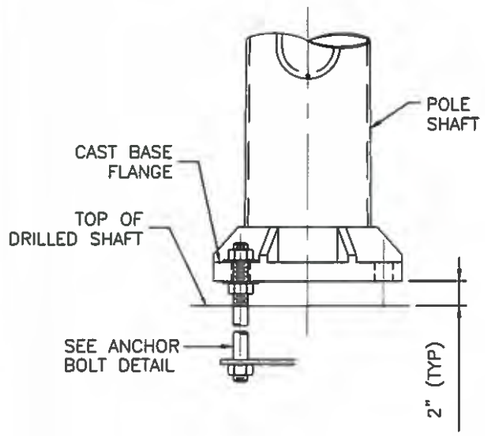

POLE BASE ELEVATION
NOT TO SCALE

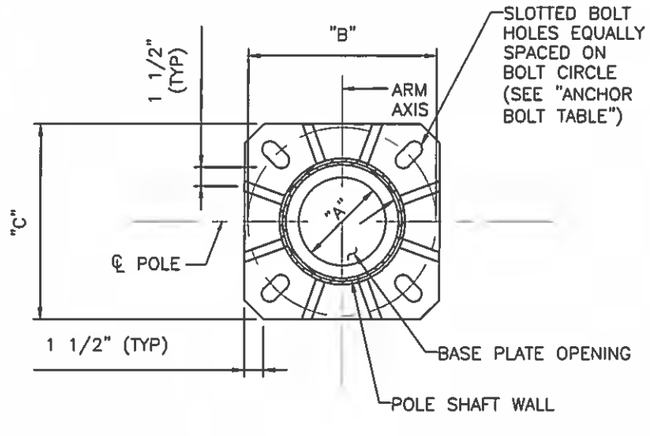

POLE BASE PLAN
NOT TO SCALE

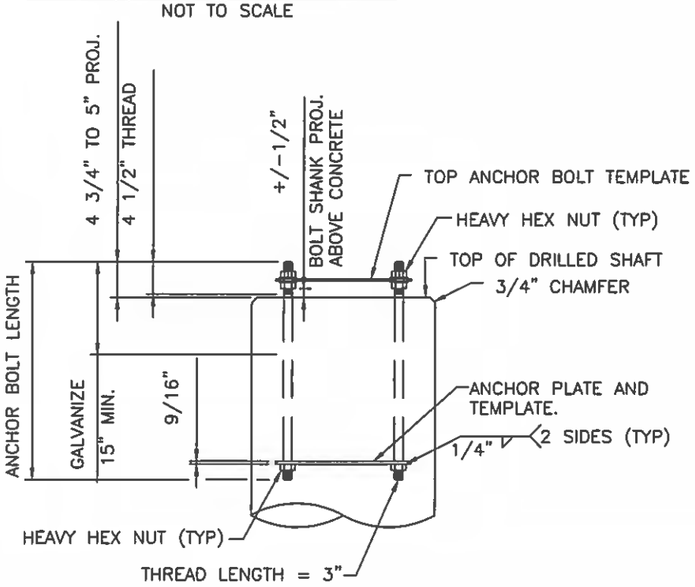

ANCHOR BOLT ASSEMBLY
NOT TO SCALE
(SEE ANCHOR BOLT TABLE)

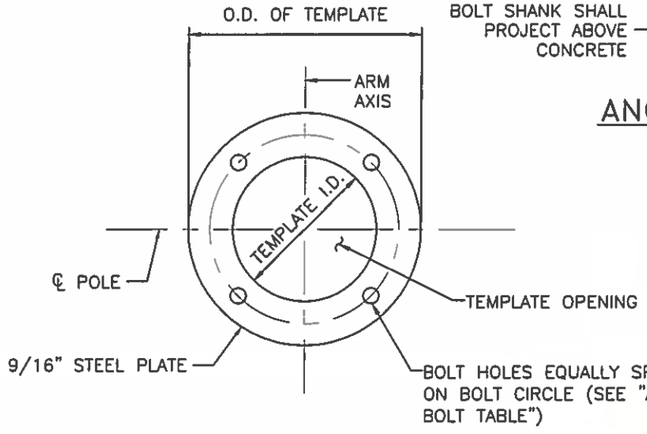

ANCHOR BOLT AND ANCHOR PLATE TEMPLATE
NOT TO SCALE

BASE WELD TABLE

MOUNTING HEIGHT	WELD SIZE (SINGLE ARM)	WELD SIZE (DOUBLE ARM)
(FT)	(IN)	(IN)
50	5/16	3/8
40	5/16	3/8
30	1/4	1/4

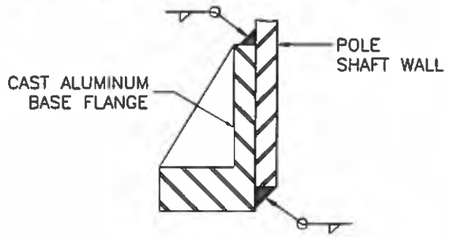

BASE WELD DETAIL
NOT TO SCALE

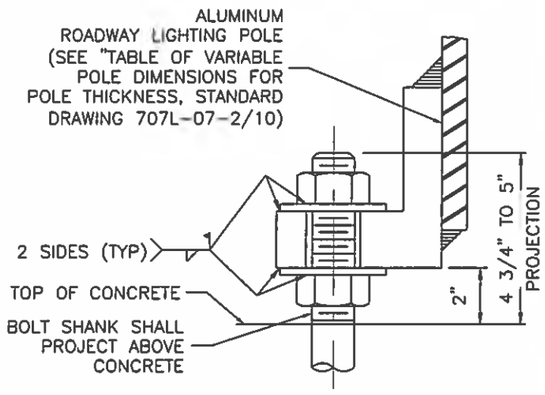

ANCHOR BOLT DETAIL
NOT TO SCALE

GENERAL NOTES

1. REFER TO STANDARD DRAWING 707L-07-6/10 FOR BREAKAWAY POLE BASE SYSTEM DETAILS AND REQUIREMENTS.
2. INSTALL DIRECT-MOUNT BASE ONLY WHEN SPECIFIED. REFER TO PLANS FOR DIRECT-MOUNT OR BREAKAWAY BASE REQUIREMENT.
3. ALUMINUM BASE FLANGE SHALL BE CAST FROM ALUMINUM ALLOY 356 T6, CONFORMING TO ASTM B 108. BASE FLANGE SHALL ACCOMMODATE FOUR ANCHOR BOLTS AS SHOWN, AND SHALL BE CAPABLE OF DEVELOPING THE FULL MOMENT, SHEAR, AND TORSIONAL STRENGTHS OF THE ALUMINUM POLE SHAFTS. BASE FLANGE SHALL ACCOMMODATE POLE SHAFT OUTSIDE DIAMETER, OR POLE SHAFT DIAMETER MAY BE INCREASED TO BE COMPATIBLE WITH BASE FLANGE.
4. ANCHOR BOLTS AND BOLT CIRCLE DIMENSIONS FOR THE ALUMINUM POLE SHALL ACCOMMODATE THE PROVIDED CAST BASE FLANGE. ANCHOR BOLT SIZES SHOWN SHALL BE CONSIDERED A MINIMUM.
5. ANCHOR BOLT PROJECTION LENGTHS AND TOTAL LENGTHS SHOWN IN STANDARD DRAWINGS 707L-07-9/10 AND 10/10 APPLY TO DIRECT-MOUNT BASE CONDITION. ADJUST ACCORDINGLY FOR BREAKAWAY BASE CONDITION.
6. WHEN BREAKAWAY COUPLINGS ARE SPECIFIED, THREAD UNC OF ANCHOR BOLTS SHALL MATCH THAT OF THE COUPLINGS.

THIS STANDARD DRAWING IS FOR USE ON NMDOT PROJECTS. OTHERS WHO USE THE NMDOT STANDARD DRAWINGS DO SO AT THEIR OWN RISK. STANDARD DRAWINGS THAT ARE APPLICABLE TO A SPECIFIC PROJECT WILL BE IDENTIFIED ON THE PROJECT PLANS BUT WILL NOT BE PHYSICALLY INCLUDED IN THOSE PLANS. THE DESIGNER WHO SPECIFIES A STANDARD DRAWING ACCEPTS THE RESPONSIBILITY OF DETERMINING THEIR APPLICABILITY.

	DATE	BY	DESCRIPTION

REVISIONS (OR CHANGE NOTICES)

NEW MEXICO
DEPARTMENT OF TRANSPORTATION
STANDARD DRAWING

ROADWAY LIGHTING
SUPPORT STRUCTURES
TYPE V

BASE PLATE & ANCHOR BOLT DETAILS

707L-07-5/10 5 of 10

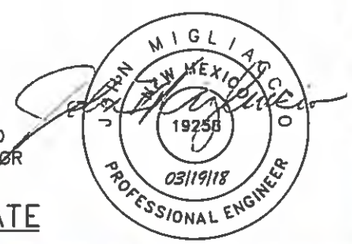

DESIGNED BY: JAZ DRAWN BY: RJK CHECKED BY: JJM

APPROVED FOR USE ON NMDOT PROJECTS: DATE: 3/22/18

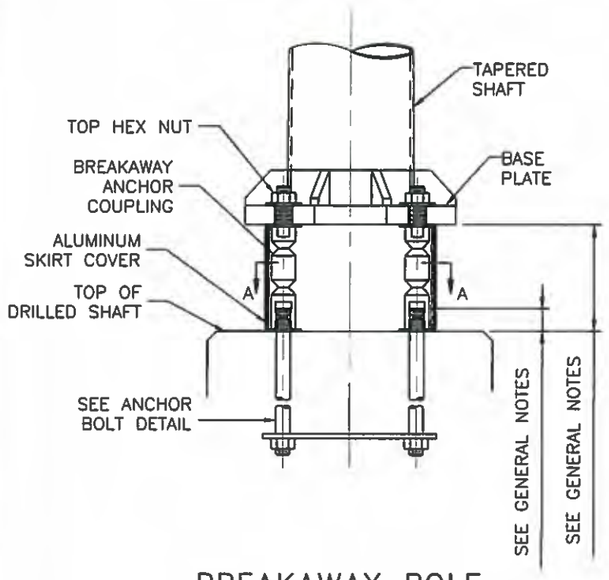

BREAKAWAY POLE BASE ELEVATION

NOT TO SCALE

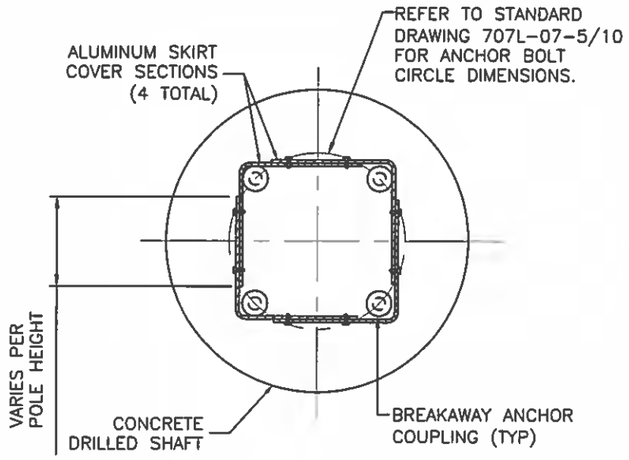

SECTION A-A: BREAKAWAY BASE SECTION

NOT TO SCALE

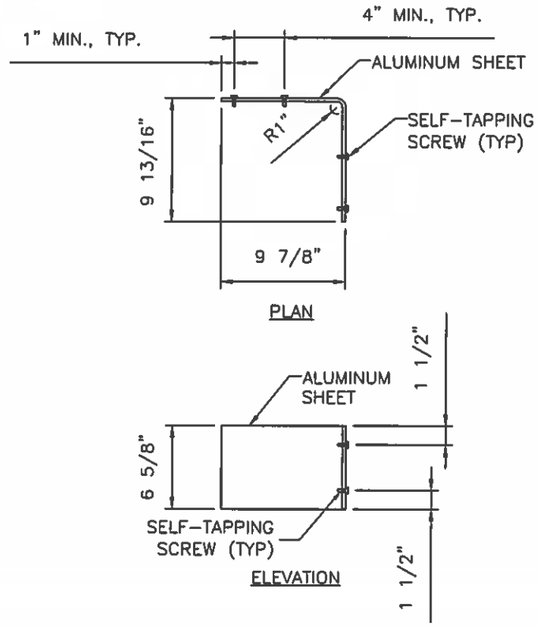

SKIRT COVER DIMENSIONS

NOT TO SCALE

GENERAL NOTES

1. REFER TO STANDARD DRAWING 707L-07-5/10 FOR BASE PLATE AND ADDITIONAL ANCHOR BOLT DETAILS AND REQUIREMENTS.
2. SKIRT COVER SHALL BE FABRICATED FROM 1/16" SHEET ALUMINUM ALLOY 3003H14.
3. WHEN BREAKAWAY BASES ARE SPECIFIED, EACH LIGHT POLE SHALL BE FURNISHED WITH FOUR (4) SKIRT COVER SECTIONS AND SIXTEEN (16) SCREWS.
4. THE INTENDED USE OF THE SKIRT COVER IS TO ENCLOSE THE VOID UNDER POLES WITH BREAKAWAY SUPPORT COUPLINGS.
5. SCREWS SHALL BE SELF-TAPPING #10 x 5/8" STAINLESS STEEL.
6. BREAKAWAY SUPPORT COUPLINGS SHALL MEET THE REQUIREMENTS IN NCHRP REPORT 350, AND THE REQUIREMENTS IN 2015 (1st EDITION) AASHTO LRFD SPECIFICATIONS FOR STRUCTURAL SUPPORTS FOR HIGHWAY SIGNS, LUMINAIRES AND TRAFFIC SIGNALS, SECTION 12.
7. WHEN BREAKAWAY BASES ARE SPECIFIED, EACH LIGHT POLE SHALL BE FURNISHED WITH FOUR (4) COUPLING SYSTEMS, COMPLETE WITH COUPLINGS, THREADED STUDS, WASHERS, NUTS, AND SHIMS.
8. BREAKAWAY ASSEMBLY DIMENSIONS VARY PER MANUFACTURER. INSTALL ANCHOR BOLT PROJECTIONS AND BASE PLATE OFFSETS IN ACCORDANCE WITH SPECIFIC BREAKAWAY ASSEMBLY MANUFACTURER'S SPECIFICATIONS.
9. ALTERNATE DESIGNS OF BREAKAWAY ASSEMBLIES MAY BE APPROVED BY THE PROJECT MANAGER, PROVIDED THEY MEET THE REQUIREMENTS HEREIN. WHEN ALTERNATE BREAKAWAY SYSTEMS ARE UTILIZED, IT SHALL BE THE THE CONTRACTOR'S RESPONSIBILITY TO PROVIDE COMPATIBLE SKIRT COVERS, AND MAKE NECESSARY ADJUSTMENTS TO ANCHOR BOLT PROJECTIONS.
10. CERTIFICATION OF BOTH BREAKAWAY AND STRUCTURAL ADEQUACY, DESIGN CALCULATIONS AND/OR TEST DATA OF PRODUCTION SAMPLES TO SUPPORT CERTIFICATION SHALL BE PROVIDED FOR BREAKAWAY SYSTEMS.

THIS STANDARD DRAWING IS FOR USE ON NMDOT PROJECTS. OTHERS WHO USE THE NMDOT STANDARD DRAWINGS DO SO AT THEIR OWN RISK. STANDARD DRAWINGS THAT ARE APPLICABLE TO A SPECIFIC PROJECT WILL BE IDENTIFIED ON THE PROJECT PLANS BUT WILL NOT BE PHYSICALLY INCLUDED IN THOSE PLANS. THE DESIGNER WHO SPECIFIES A STANDARD DRAWING ACCEPTS THE RESPONSIBILITY OF DETERMINING THEIR APPLICABILITY.

	DATE	BY	DESCRIPTION

REVISIONS (OR CHANGE NOTICES)

NEW MEXICO
DEPARTMENT OF TRANSPORTATION
STANDARD DRAWING

ROADWAY LIGHTING
SUPPORT STRUCTURES
TYPE V

BREAKAWAY BASE DETAILS

707L-07-6/10 6 of 10

JOHN MIGLIACCIO
NEW MEXICO
19258
03/19/18
PROFESSIONAL ENGINEER

DESIGNED BY: JAZ DRAWN BY: RJK CHECKED BY: JJM

APPROVED FOR USE ON NMDOT PROJECTS: DATE: 3/22/18

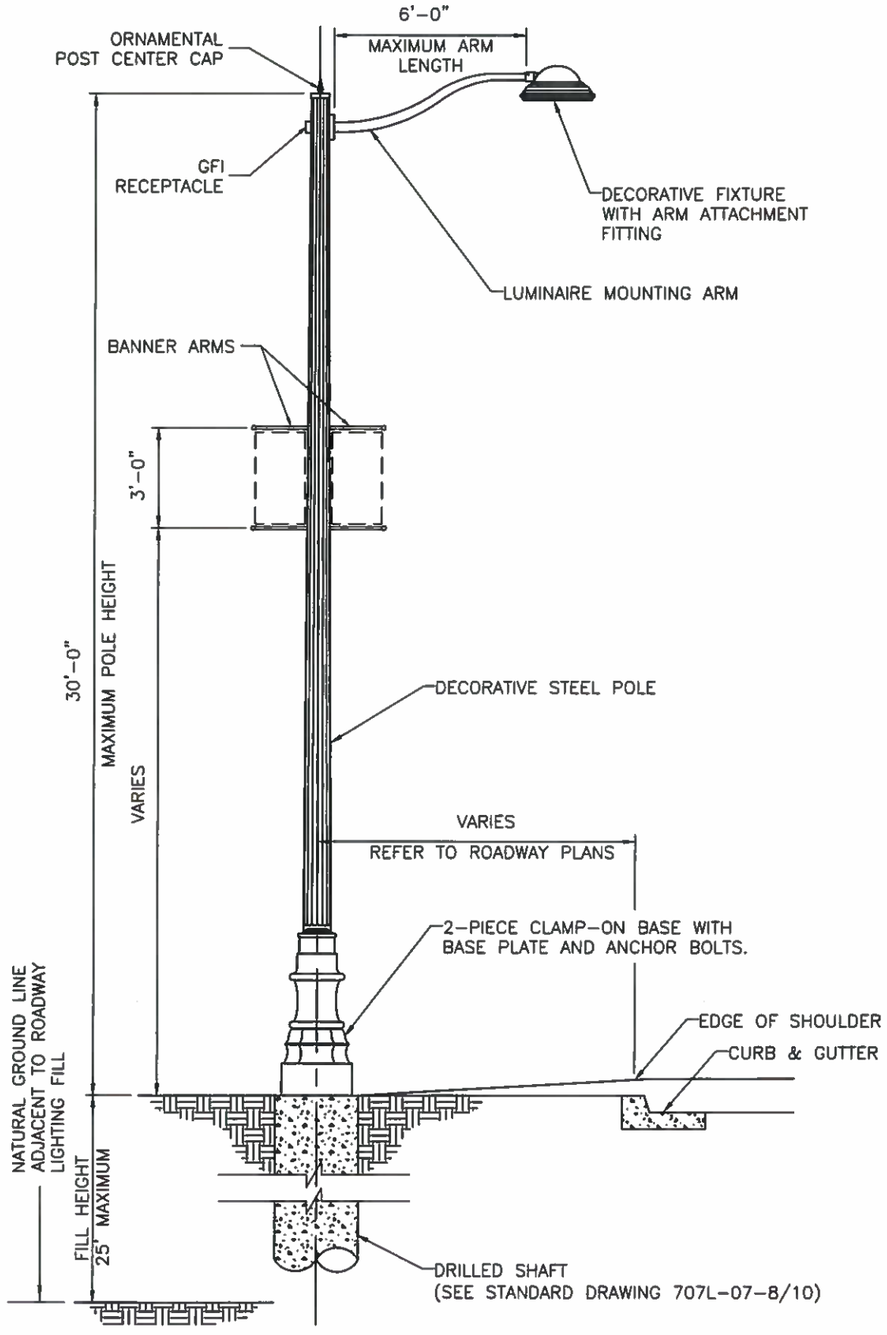

30' DECORATIVE ROADWAY LIGHTING OPTION ELEVATION

NOT TO SCALE

GENERAL NOTES

1. REFER TO STANDARD DRAWING 707L-07-1/10 FOR GENERAL DESIGN CRITERIA, WORKMANSHIP REQUIREMENTS, AND SUBMITTAL REQUIREMENTS.

2. SHOP DRAWINGS FOR ORNAMENTAL LIGHT ASSEMBLIES SHALL BE PROVIDED TO THE NMDOT PROJECT MANAGER FOR APPROVAL, PRIOR TO FABRICATION AND CONSTRUCTION. SHOP DRAWINGS SHALL DEPICT ALL FEATURES AND OPTIONS CALLED FOR IN THE CONTRACT DOCUMENTS INCLUDING, BUT NOT LIMITED TO:

   A. POLE MODEL
   B. POLE HEIGHT
   C. POLE SHAFT MATERIAL
   D. POLE SHAFT STYLE
   E. POST CAP STYLE
   F. ARM MODEL
   G. ARM LENGTH
   H. ARM MATERIAL
   I. ARM STYLE
   J. LUMINAIRE FIXTURE MODEL
   K. LUMINAIRE FITTING MOUNT METHOD
   L. WATTAGE
   M. LIGHT SOURCE TYPE
   N. VOLTAGE
   O. LUMINAIRE LENS TYPE
   P. OPTICS TYPE
   Q. DECORATIVE BASE STYLE
   R. ACCESS DOOR LOCATION AND SIZE
   S. BASE PLATE
   T. ANCHOR BOLTS
   U. FOUNDATION LOADINGS
   V. GROUND FAULT INTERRUPTER LOCATION
   W. BANNER ARM LOCATIONS
   X. FINISHES

3. FOR ALL STRUCTURAL COMPONENTS PROVIDED BY THE ORNAMENTAL LIGHTING MANUFACTURER, CERTIFICATION OF STRUCTURAL ADEQUACY AND DESIGN CALCULATIONS TO SUPPORT CERTIFICATION SHALL BE PROVIDED.

4. THE POLE AND BASE ASSEMBLY SHALL BE PROVIDED WITH ONE ACCESS DOOR FOR WIRING AND MECHANICALLY SECURED WITH TWO, TAMPER-PROOF STAINLESS STEEL SCREWS OR OTHER APPROVED METHOD. ACCESS DOOR SHALL BE LOCATED OPPOSITE FROM THE STREET-FACING SIDE OF THE POLE.

5. THE 30' DECORATIVE ROADWAY LIGHTING OPTION ELEVATION SHOWN ON THIS STANDARD DRAWING IS A SCHEMATIC REPRESENTATION OF POSSIBLE FEATURES IN THE ASSEMBLY. ACTUAL OPTIONS, FEATURES, AND COMPONENTS SHALL BE SELECTED BY NMDOT ON A PROJECT BASIS AND WILL BE SPECIFIED IN THE ROADWAY PLANS.

THIS STANDARD DRAWING IS FOR USE ON NMDOT PROJECTS. OTHERS WHO USE THE NMDOT STANDARD DRAWINGS DO SO AT THEIR OWN RISK. STANDARD DRAWINGS THAT ARE APPLICABLE TO A SPECIFIC PROJECT WILL BE IDENTIFIED ON THE PROJECT PLANS BUT WILL NOT BE PHYSICALLY INCLUDED IN THOSE PLANS. THE DESIGNER WHO SPECIFIES A STANDARD DRAWING ACCEPTS THE RESPONSIBILITY OF DETERMINING THEIR APPLICABILITY.

	DATE	BY	DESCRIPTION

REVISIONS (OR CHANGE NOTICES)

JOHN MIGLIACCIO NEW MEXICO 19258 03/19/18 PROFESSIONAL ENGINEER

NEW MEXICO DEPARTMENT OF TRANSPORTATION STANDARD DRAWING

ROADWAY LIGHTING SUPPORT STRUCTURES TYPE V

DECORATIVE LIGHTING DETAILS

DESIGNED BY: JAZ DRAWN BY: RJK CHECKED BY: JJM

APPROVED FOR USE ON NMDOT PROJECTS: Kathy Ward DATE: 3/22/18

707L-07-7/10 7 of 10

FOUNDATION NOTES:

1. DRILLED SHAFT FOUNDATIONS SHALL CONFORM TO SECTION 502 AND SPREAD FOOTING FOUNDATIONS SHALL CONFORM TO SECTION 511 OF THE LATEST EDITION OF THE NEW MEXICO STANDARD SPECIFICATIONS FOR HIGHWAY AND BRIDGE CONSTRUCTION. FOUNDATIONS SHALL BE COMPLETED AT LEAST 7 DAYS BEFORE ERECTING LIGHTING STRUCTURES ON THE FOUNDATIONS.

2. ALUMINUM ROADWAY LIGHTING SUPPORT STRUCTURES TYPE V FOR THE 30 FT, 40 FT, AND 50 FT CASES, AND ASSOCIATED FOUNDATIONS, ARE DESIGNED TO CONFORM TO 2015 (1ST EDITION) AASHTO STANDARD SPECIFICATIONS FOR STRUCTURAL SUPPORTS FOR HIGHWAY SIGNS, LUMINAIRES AND TRAFFIC SIGNALS. STEEL DECORATIVE (ORNAMENTAL) LIGHTING, AND ASSOCIATED FOUNDATIONS, IS DESIGNED TO CONFORM TO 2009 (5TH EDITION) AASHTO STANDARD SPECIFICATIONS FOR STRUCTURAL SUPPORTS FOR HIGHWAY SIGNS, LUMINAIRES AND TRAFFIC SIGNALS.

3. ALL CONCRETE FOR DRILLED SHAFT FOUNDATIONS SHALL BE CLASS G, f'c = 3000 PSI. ALL CONCRETE FOR SPREAD FOOTING FOUNDATIONS SHALL BE CLASS A, f'c = 3000 PSI. CONCRETE SHALL CONFORM TO SECTION 510 – PORTLAND CEMENT CONCRETE. ALL EXPOSED EDGES OF CONCRETE SHALL BE CHAMFERED ¾" UNLESS OTHERWISE NOTED.

4. REINFORCING STEEL (REBAR) SHALL CONFORM TO SECTION 540 – STEEL REINFORCEMENT AASHTO M 31 (ASTM A615), GRADE 60. DIMENSIONS REFER TO THE CENTERLINE OF THE BAR. ALL REINFORCING STEEL SHALL BE NON–EPOXY UNLESS OTHERWISE NOTED.

5. ANCHOR BOLTS SHALL CONFORM TO AASHTO M 314 (ASTM F1554 GRADE 55). PROVIDE A HEX NUT, LEVELING NUT AND 2 WASHERS TOP AND BOTTOM OF EACH BOLT. ANCHOR BOLTS SHALL BE CONSIDERED INCIDENTAL TO THE FOUNDATIONS.

6. PROVIDE BOLT TEMPLATE FOR CAST–IN–PLACE INSTALLATION OF ANCHOR BOLTS. COORDINATE TEMPLATE REQUIREMENTS WITH BOLT CIRCLE DIAMETER, BOLT DIAMETER, AND DRILLED SHAFT DIAMETER FOR PLACEMENT AND FIT. TAKE PROPER CARE TO ALIGN FOUNDATION BOLT PATTERN WITH THE BASE PLATE PATTERN THAT RESULTS IN CORRECT CENTERLINE ALIGNMENT OF SUPPORT STRUCTURE WITH BOLT PATTERN.

7. PRIOR TO ERECTION OF POSTS, EXCAVATION CREATED FOR FOUNDATION CONSTRUCTION SHALL BE BACKFILLED IN ACCORDANCE WITH SECTION 210 OF THE LATEST EDITION OF THE NEW MEXICO STANDARD SPECIFICATIONS FOR HIGHWAY AND BRIDGE CONSTRUCTION WITH MATERIAL EQUIVALENT TO THE SURROUNDING SOIL. FOUNDATION CONCRETE SHALL HAVE REACHED A MINIMUM STRENGTH OF 2200 PSI PRIOR TO BACKFILLING. BACKFILL SHALL BE CONSIDERED INCIDENTAL TO CONSTRUCTION.

8. FOUNDATION DESIGN IS FOR THE ROADWAY LIGHTING SUPPORT STRUCTURES STANDARD DIAMETERS. IF A LARGER DIAMETER IS FURNISHED, THE CONTRACTOR SHALL BUILD A LARGER FOUNDATION AS DETERMINED NECESSARY BY THE PROJECT MANAGER AND NO ADDITIONAL PAYMENT OR COMPENSATION SHALL BE MADE.

9. DRILLED SHAFT DESIGN CONSIDERED PARAMETERS FOR COHESIVE AND NON–COHESIVE SOILS AS WELL AS ROCK. SHOULD SITE OR SOIL CONDITIONS POSE UNIQUE CHALLENGES, CONSULT WITH THE STATE GEOTECHNICAL ENGINEER FOR ANY REMEDIAL MEASURES BEFORE PLACEMENT OF THE FOUNDATION.

10. DRILLED SHAFT FOUNDATION DEPTH MUST BE INCREASED IF INSTALLED ON OR NEAR (WITHIN A SHAFT DIAMETER OF) A GROUND SLOPE. IF GROUND SLOPES MINIMALLY DOWN NO MORE THAN 2 FEET AND THEN BACK UP WITHIN ½ FOUNDATION DEPTH, AS IN A DRAINAGE DITCH, TREAT AS IF LEVEL. SEE FOUNDATION DETAIL FOR SLOPING GROUND, THIS SHEET.

11. FINISHED GRADE FOR ALL FOUNDATIONS SHALL BE PER THE CONTRACT DOCUMENTS. THE TOP OF STANDARD FOUNDATIONS SHALL BE FLUSH WITH ADJACENT SIDEWALK OR PAVED AREAS WHEN PRESENT AND SHALL CONFORM TO THE AMERICANS WITH DISABILITIES ACT.

12. FOR BASE PLATE AND ANCHOR BOLT DETAILS, SEE 707L–07–5/10.

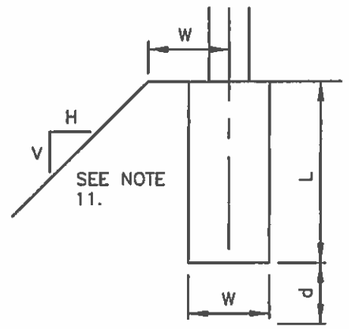

SLOPE	d
3H:1V	0
2H:1V	0.5W
1.5H:1V	1.0W

d = INCREASE IN FOUNDATION DEPTH AND REBAR LENGTH DUE TO SLOPE

FOUNDATION DETAIL FOR SLOPING GROUND



THIS STANDARD DRAWING IS FOR USE ON NMDOT PROJECTS. OTHERS WHO USE THE NMDOT STANDARD DRAWINGS DO SO AT THEIR OWN RISK. STANDARD DRAWINGS THAT ARE APPLICABLE TO A SPECIFIC PROJECT WILL BE IDENTIFIED ON THE PROJECT PLANS BUT WILL NOT BE PHYSICALLY INCLUDED IN THOSE PLANS. THE DESIGNER WHO SPECIFIES A STANDARD DRAWING ACCEPTS THE RESPONSIBILITY OF DETERMINING THEIR APPLICABILITY.

NO.	DATE	BY	DESCRIPTION

REVISIONS (OR CHANGE NOTICES)

NEW MEXICO DEPARTMENT OF TRANSPORTATION STANDARD DRAWING

ROADWAY LIGHTING SUPPORT STRUCTURES TYPE V

FOUNDATION GENERAL NOTES

DESIGNED BY: ADA DRAWN BY: DLH CHECKED BY: NJB

APPROVED FOR USE ON NMDOT PROJECTS: DATE: 11/17/17

707L–07–8/10 8 of 10

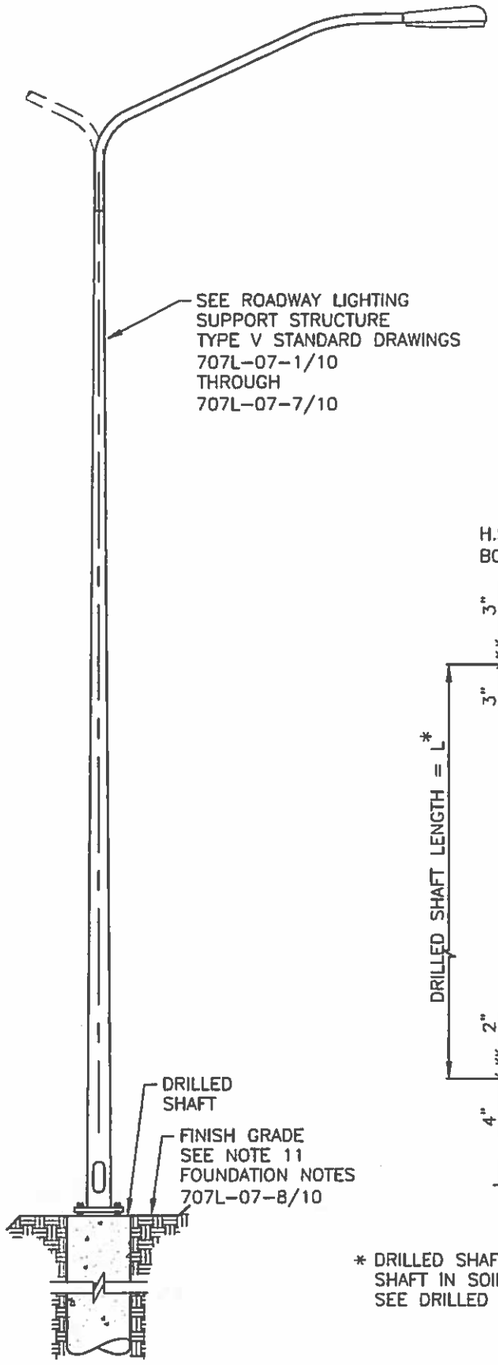

ROADWAY LIGHTING
POLE ELEVATION
NOT TO SCALE

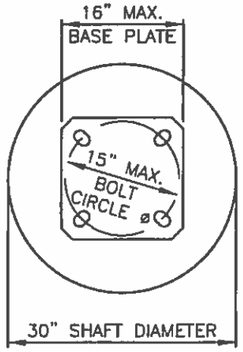

SECTION A–A
NOT TO SCALE

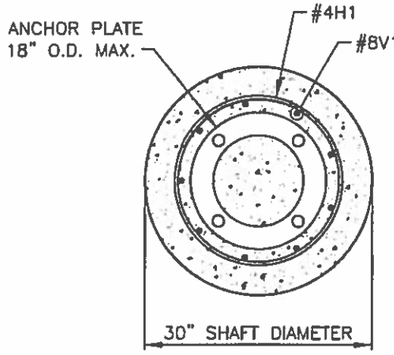

SECTION B–B
NOT TO SCALE

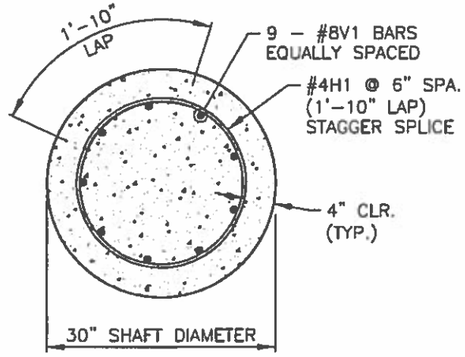

SECTION C–C
NOT TO SCALE

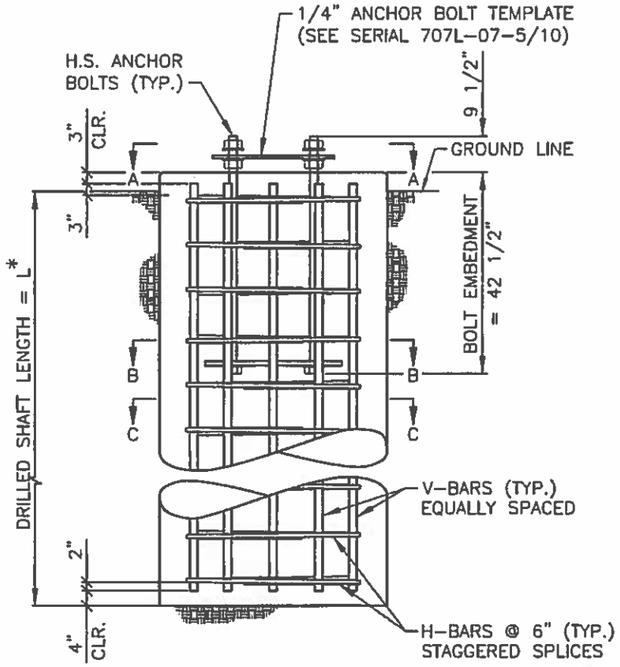

FOUNDATION ELEVATION
NOT TO SCALE

* DRILLED SHAFT LENGTH IS MEASURED AS LENGTH OF SHAFT IN SOIL OR ROCK AS APPLICABLE. SEE DRILLED SHAFT LENGTHS TABLE FOR LENGTH.

DRILLED SHAFT LENGTHS

SEE NOTE 9 FOUNDATION NOTES 707-07-8/10

POLE HEIGHT (ft)	DRILLED SHAFT LENGTH (ft)
50	8.5
30 ORNAMENTAL	7.0
40	7.5
30	6.0

ANCHOR BOLTS

POLE HEIGHT (ft)	POLE DIAMETER O.D. (in)	BOLT DIAMETER (in)	BOLT LENGTH (in)	NUMBER OF BOLTS	BOLT CIRCLE DIAMETER (in)
50	10	1.000	52	4	15
40	9	1.000	52	4	11.5
30	8	1.000	52	4	11.5

REINFORCING SCHEDULE

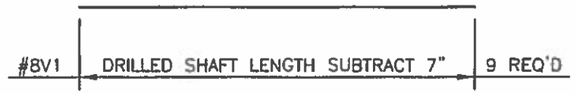

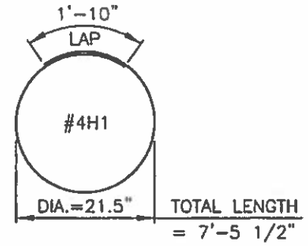

THIS STANDARD DRAWING IS FOR USE ON NMDOT PROJECTS. OTHERS WHO USE THE NMDOT STANDARD DRAWINGS DO SO AT THEIR OWN RISK. STANDARD DRAWINGS THAT ARE APPLICABLE TO A SPECIFIC PROJECT WILL BE IDENTIFIED ON THE PROJECT PLANS BUT WILL NOT BE PHYSICALLY INCLUDED IN THOSE PLANS. THE DESIGNER WHO SPECIFIES A STANDARD DRAWING ACCEPTS THE RESPONSIBILITY OF DETERMINING THEIR APPLICABILITY.

NO.	DATE	BY	DESCRIPTION

REVISIONS (OR CHANGE NOTICES)

NEW MEXICO DEPARTMENT OF TRANSPORTATION STANDARD DRAWING

ROADWAY LIGHTING
SUPPORT STRUCTURES
TYPE V

DRILLED SHAFT DETAILS

707L-07-9/10 9 of 10



DESIGNED BY: ADA DRAWN BY: DLH CHECKED BY: NJB

APPROVED FOR USE ON NMDOT PROJECTS: Kathy Crabb DATE: 11/17/17

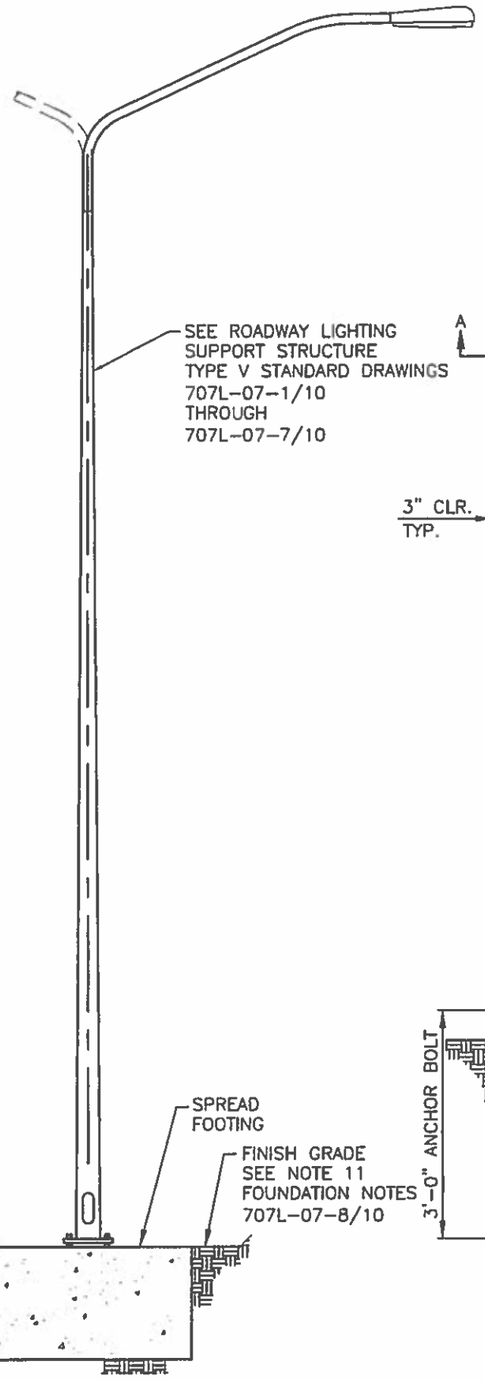

ROADWAY LIGHTING
POLE ELEVATION
NOT TO SCALE

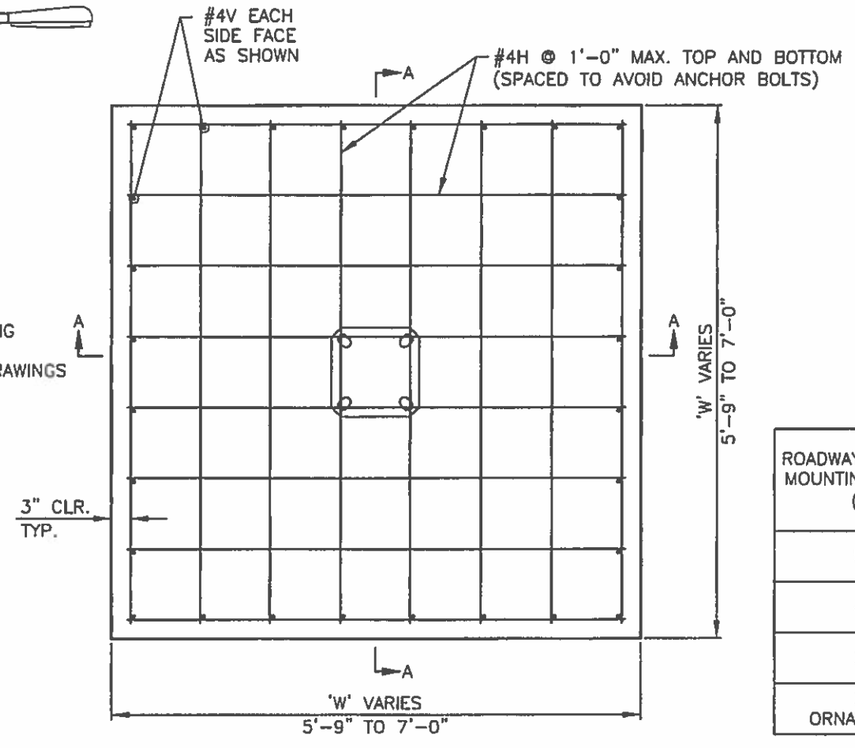

PLAN VIEW OF SPREAD FOOTING
NOT TO SCALE

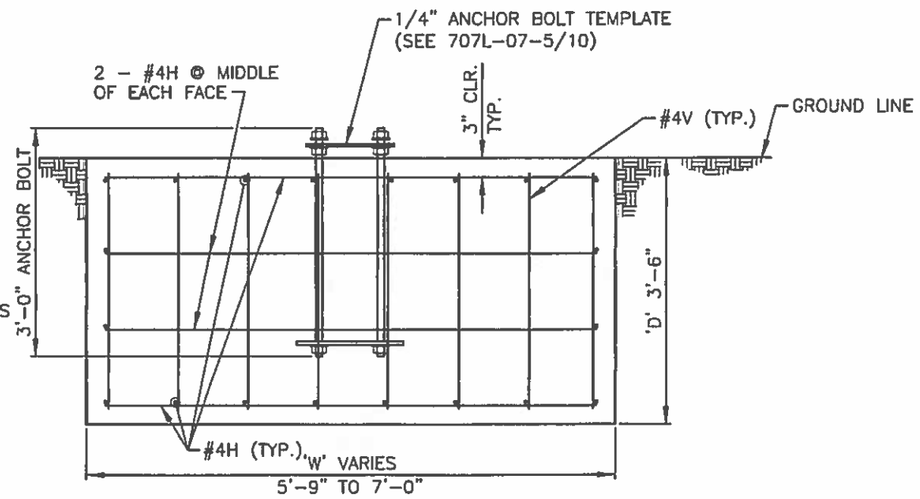

SECTION A-A
NOT TO SCALE

DESIGN DATA:

DESIGN STRENGTH:

CONCRETE: fc' = 3000 PSI @ 28 DAYS = NMDOT CLASS "A" CONCRETE.
REINFORCING STEEL: fy = 60 KSI
ALLOWABLE SOIL BEARING PRESSURE: 1.0 T/SQ. FT.

ROADWAY LIGHTING MOUNTING HEIGHT (ft)	SQUARE FOOTING WIDTH 'W' (ft)	SQUARE FOOTING DEPTH 'D' (ft)	REINFORCING SCHEDULE				ESTIMATED QUANTITIES	
			MARK	SIZE	LENGTH	NO. REQ'D	CONCRETE CLASS "A" (cu. yd.)	BARS (lbs)
50	7.00	3.50	#4V	#4	3'-0"	28	6.4	230
			#4H	#4	6'-6"	40		
40	6.50	3.50	#4V	#4	3'-0"	24	5.5	193
			#4H	#4	6'-0"	36		
30	5.75	3.50	#4V	#4	3'-0"	20	4.3	153
			#4H	#4	5'-3"	32		
30 ORNAMENTAL	6.75	3.50	#4V	#4	3'-0"	24	5.9	199
			#4H	#4	6'-3"	36		

THIS STANDARD DRAWING IS FOR USE ON NMDOT PROJECTS. OTHERS WHO USE THE NMDOT STANDARD DRAWINGS DO SO AT THEIR OWN RISK. STANDARD DRAWINGS THAT ARE APPLICABLE TO A SPECIFIC PROJECT WILL BE IDENTIFIED ON THE PROJECT PLANS BUT WILL NOT BE PHYSICALLY INCLUDED IN THOSE PLANS. THE DESIGNER WHO SPECIFIES A STANDARD DRAWING ACCEPTS THE RESPONSIBILITY OF DETERMINING THEIR APPLICABILITY.

NO.	DATE	BY	DESCRIPTION

REVISIONS (OR CHANGE NOTICES)

ALYSSA J BEACH
NEW MEXICO
23675
5/19/2017
REGISTERED PROFESSIONAL ENGINEER

NEW MEXICO DEPARTMENT OF TRANSPORTATION STANDARD DRAWING

ROADWAY LIGHTING
SUPPORT STRUCTURES
TYPE V

SPREAD FOOTING DETAILS

DESIGNED BY: ADA DRAWN BY: DLH CHECKED BY: NJB

APPROVED FOR USE ON NMDOT PROJECTS: Kathy Arell DATE: 11/17/17

707L-07-10/10 10 of 10

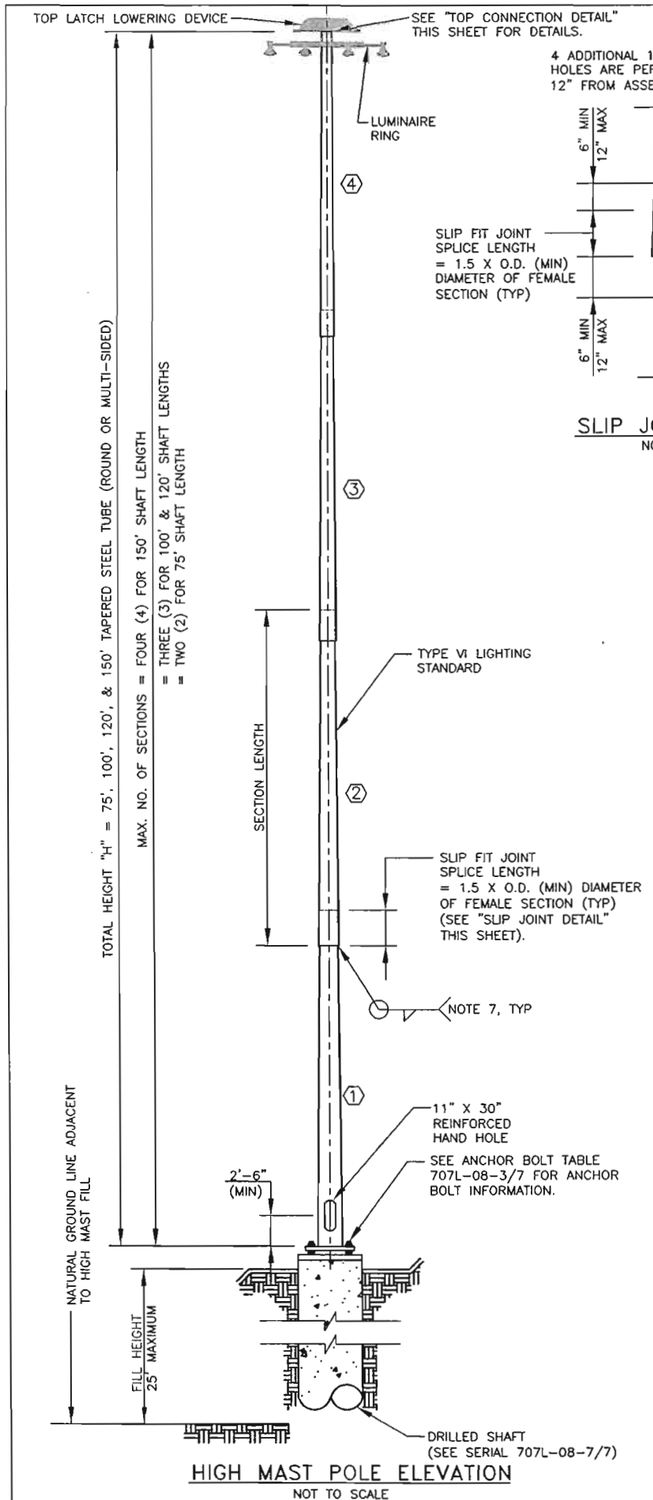

HIGH MAST POLE ELEVATION
NOT TO SCALE

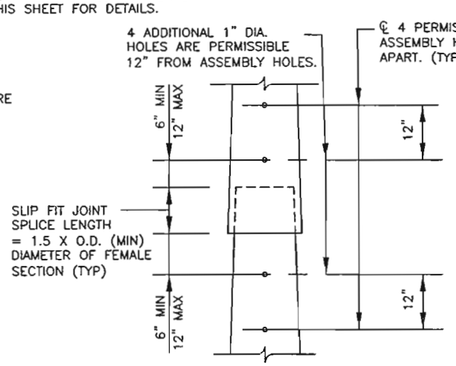

SLIP JOINT DETAIL
NOT TO SCALE

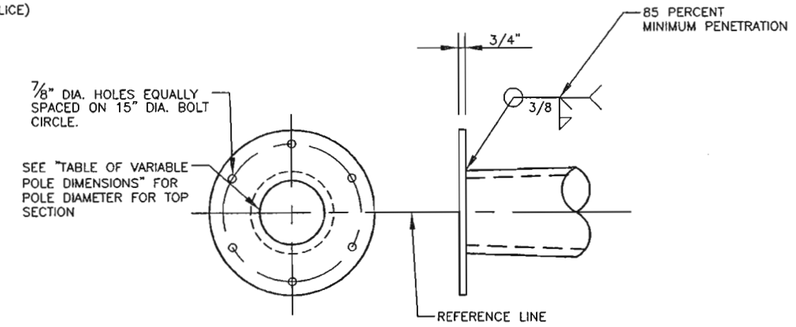

TOP CONNECTION DETAIL
NOT TO SCALE

TABLE OF VARIABLE POLE DIMENSIONS

TOTAL HEIGHT "H"	SECTION	SECTION LENGTH	SPLICE LENGTH	RATE OF TAPER	OUTSIDE DIAMETER		SECTION THICKNESS
					BOTTOM	TOP	
(FT)		(FT)	(IN)	(IN/FT)	(IN)	(IN)	(IN)
150	1	40.00	33.00	0.14	26.000	20.400	0.3750
	2	39.50	26.00	0.14	21.410	15.880	0.3125
	3	39.42	18.00	0.14	16.683	11.165	0.2500
	4	37.50	0.00	0.14	11.853	6.603	0.2391
120	1	42.00	26.00	0.14	22.000	16.120	0.2500
	2	41.33	18.00	0.14	16.902	11.115	0.2391
	3	40.33	0.00	0.14	11.700	6.054	0.1875
100	1	32.00	25.00	0.14	20.000	15.520	0.1875
	2	31.67	19.00	0.14	16.187	11.753	0.1875
	3	40.00	0.00	0.14	12.350	6.750	0.1875
75	1	38.92	20.00	0.14	18.000	12.551	0.1875
	2	37.75	0.00	0.14	13.160	7.875	0.1875

GENERAL NOTES:

1. DESIGN CONFORMS TO 2001 AASHTO STANDARD SPECIFICATIONS FOR STRUCTURAL SUPPORTS FOR HIGHWAY SIGNS, LUMINAIRES AND TRAFFIC SIGNALS, WITH REVISIONS UP TO AND INCLUDING 2006 INTERIMS.

2. DESIGN CRITERIA:

   RECURRENCE INTERVAL = 50 YRS
   SERVICE LIFE = 50 YRS
   DESIGN WIND SPEED = 90 MPH
   GUST EFFECT FACTOR = 1.14
   FATIGUE CATEGORY I
   MATERIALS (POLES AND HAND HOLES): 55,000 PSI MINIMUM YIELD

   MAXIMUM NUMBER OF LUMINAIRES IS EIGHT (8). MAXIMUM WEIGHT OF EACH LUMINAIRE IS 85 LBS, WITH A PROJECTED AREA OF 3.4 FT².

   MAXIMUM ALLOWABLE DEFLECTION = 9% OF POLE HEIGHT.

3. WORKMANSHIP AND MATERIALS SHALL CONFORM TO NEW MEXICO DEPARTMENT OF TRANSPORTATION (NMDOT) STANDARD SPECIFICATIONS FOR HIGHWAY AND BRIDGE CONSTRUCTION CURRENT EDITION. CONTRACTOR SHALL CONTACT NMDOT FOR APPROVED PRODUCTS LISTING.

4. POLES SHALL CONSIST OF ROUND TELESCOPING SECTIONS, TAPERED AT A RATE OF 0.14"/FOOT. MULTI-SIDED SECTIONS WILL BE PERMITTED AS AN ALTERNATE DESIGN. SEE NOTE 9 FOR REQUIREMENTS.

5. MATERIALS:

   A. POLES SHALL BE STEEL OF 50 KSI MINIMUM YIELD STRENGTH AFTER FABRICATION.

   B. BASE PLATES AND ANCHOR BOLT TEMPLATES SHALL BE PER AASHTO M-183 (ASTM A-36).

   C. HARDWARE AND ANCHOR BOLTS SHALL BE PER AASHTO M-314 (ASTM F-1554), GR. 55. EACH BOLT SHALL BE SUPPLIED WITH A MINIMUM OF THREE HEAVY HEX NUTS AND TWO FLAT WASHERS. STEEL BOLT TEMPLATES SHALL BE SUPPLIED WITH ANCHOR BOLTS. NUTS SHALL BE ASTM A-563. WASHERS SHALL BE ASTM A-436.

   D. PRELOAD BOLTS BASED ON BOLT TYPE AND DIAMETER. PROVIDE LOCKING ADHESIVE (ND INDUSTRIES, NYLOCK, LOCKTITE, OR APPROVED EQUAL).

6. GALVANIZING:

   A. POLES AND PLATES SHALL BE GALVANIZED PER AASHTO M-111-94 (ASTM A-123).

   B. HARDWARE AND ANCHOR BOLTS SHALL BE HOT-DIPPED GALVANIZED PER AASHTO M-232 M (ASTM A-153).

7. WELDS:

   ALL FABRICATORS SHALL BE CERTIFIED UNDER NMDOT SPECIFICATION SECTION 541.3 "CERTIFICATION OF STEEL FABRICATORS", AND SHALL CONFORM TO THE LATEST EDITION OF THE STRUCTURAL WELDING CODE (ANSI/AWS D1.1) AND SHALL CONFORM TO SECTION 707 "SIGNAL AND LIGHTING STANDARDS" OF THE CURRENT NEW MEXICO DEPARTMENT OF TRANSPORTATION (NMDOT) STANDARD SPECIFICATIONS AND SPECIAL PROVISIONS OR MEET THE DATA SHOWN ON THESE DRAWINGS.

   FILLET WELD AT BOTTOM OF SLIP FIT JOINT SHALL BE MINIMUM SIZE PER AWS D1.1.

8. THE CONTRACTOR/FABRICATOR SHALL FURNISH EIGHT SETS OF SHOP DRAWINGS OF ALL HIGH MAST LUMINAIRE SUPPORT STRUCTURE COMPONENTS FOR THE TYPE VI LIGHTING STANDARD TO THE STATE BRIDGE ENGINEER FOR APPROVAL. SHOP DRAWINGS SHALL COVER ALL MECHANISMS/PARTS REQUIRED FOR THE INSTALLATION. THE CONTRACTOR SHALL FURNISH AN APPROPRIATE CERTIFICATION OF COMPLIANCE WITH ALL DESIGN REQUIREMENTS. THE CONTRACTOR'S CERTIFICATION SHALL APPEAR ON THE DRAWINGS. THE CONTRACTOR MUST RECEIVE WRITTEN APPROVAL OF THE SHOP DRAWINGS FROM THE ENGINEER PRIOR TO BEGINNING FABRICATION OR ASSEMBLY OF PARTS.

9. THE INFORMATION AND DETAILS PROVIDED FOR POLES, ANCHOR BOLTS, HAND HOLE, AND FOUNDATIONS IN THESE STANDARDS ARE MINIMUM REQUIREMENTS. DESIGN AND DETAILS FOR ALTERNATE DESIGNS AND ALL OTHER LUMINAIRE SUPPORT STRUCTURE COMPONENTS SUCH AS TOP CONNECTION PLATE, SPECIFIC REQUIREMENTS FOR HAND HOLES TO ACCOMMODATE EXTERNAL WINCH, HEADFRAME ASSEMBLY, LUMINAIRE RING ASSEMBLY, AND TOP LATCH LOWERING DEVICE SHALL BE PROVIDED BY CONTRACTOR/FABRICATOR IN COMPLIANCE WITH AASHTO SPECIFICATIONS REFERENCED IN NOTE 1 AND ALL OTHER GOVERNING ELECTRICAL AND MECHANICAL SPECIFICATIONS.

10. THE TOP CONNECTION DETAIL MAY BE REVISED TO COMPLY WITH THE REQUIREMENTS OF THE TOP LATCH LOWERING DEVICE SYSTEM. THE REVISED TOP CONNECTION DETAIL SHALL BE SUBMITTED TO NMDOT FOR REVIEW AND APPROVAL AS PART OF THE DESIGN FOR THE TOP LATCH LOWERING DEVICE SYSTEM.

11. ALL TYPE VI STANDARDS SHALL BE EQUIPPED WITH AN INTERNAL MOTOR ASSEMBLY WITH 20' REMOTE CONTROL FOR THE LOWERING DEVICE. LOWERING DEVICES SHALL BE TOP LATCH AS APPROVED BY LIGHTING DESIGN ENGINEER. THE INTERNAL MOTOR ASSEMBLY AND LOWERING DEVICE WILL BE SUBSIDIARY TO THE HIGH MAST POLE PAY ITEM.

12. THE LOWERING DEVICE, LIGHTING FIXTURES AND POLES SHALL BE MANUFACTURED AND TESTED AS AN INTEGRATED SYSTEM AND BE PROVIDED AND WARRANTED BY THE MANUFACTURER.

13. FACTORY REPRESENTATIVE SHALL PROVIDE ONE DAY TRAINING AND VIDEO TAPE ON OPERATING THE LOWERING DEVICE SYSTEM FOR THE LOCAL MAINTAINING AGENCY AND LOCAL POWER COMPANY. THIS TRAINING SHALL BE APPROXIMATELY ONE-HALF IN THE CLASSROOM AND ONE-HALF IN THE FIELD.

14. APPROXIMATELY 90 DAYS AFTER INSTALLATION, A FACTORY REPRESENTATIVE SHALL RETURN TO THE PROJECT SITE TO ADJUST THE LOWERING DEVICE CABLES AND LATCHING MECHANISMS. THE CONTRACTOR SHALL COORDINATE WITH THE NMDOT LIGHTING ENGINEER, THE LOCAL MAINTENANCE AGENCY, AND THE LOCAL POWER COMPANY TO BE PRESENT WHILE THE ADJUSTMENTS ARE MADE.

15. DURING THE ERECTION OF THE HIGH MAST LIGHTING POLES AND LOWERING DEVICES, A FACTORY REPRESENTATIVE SHALL BE PRESENT TO ENSURE CORRECT ERECTION.

16. CONTRACTOR SHALL PROVIDE COPIES OF ALL HIGH MAST LIGHTING SYSTEM TECHNICAL DATA, CALCULATIONS, SHOP DRAWINGS, AND LUMINAIRE TYPE INFORMATION TO THE LOCAL MAINTAINING AGENCY AND THE LOCAL POWER COMPANY.

17. THE DESIGN PROVIDED FOR THIS STANDARD MUST BE RE-EVALUATED FOR POLES LOCATED IN ELEVATED REGIONS AND POLES LOCATED IN SPECIAL WIND REGIONS EXCEEDING THE DESIGN CRITERIA PROVIDED IN THESE STANDARDS.

18. CONTRACTOR/POLE FABRICATOR SHALL SUBMIT GROUNDING DETAILS FOR REVIEW AND APPROVAL.

19. ALL DESIGNS SUBMITTED FOR APPROVAL MUST BE SIGNED AND SEALED BY A LICENSED ENGINEER IN THE STATE OF NEW MEXICO.

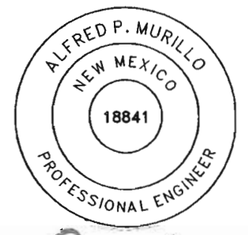

12-15-08

NO.	DATE	REV.BY	DESCRIPTION

REVISIONS (OR CHANGE NOTICES)

NEW MEXICO
DEPARTMENT OF TRANSPORTATION
STANDARD DRAWING

HIGH MAST LUMINAIRE
SUPPORT STRUCTURES
TYPE VI

DESIGNED BY NB/MS DRAWN BY CCS CHECKED BY APM

707L-08-1/7 1 of 7

12/15/2008 1:29:59 PM

GB 600 PNM Amendment 1

Final Audit Report 2024-11-01

Created:	2024-10-30
By:	Amanda Archuleta (ajarchuleta@santafenm.gov)
Status:	Canceled / Declined
Transaction ID:	CBJCHBCAABAAO2dtAooY47aaiUmvdxrXeaz5OB4YXTKv

"GB 600 PNM Amendment 1" History

Document created by Amanda Archuleta (ajarchuleta@santafenm.gov)
2024-10-30 - 10:55:31 PM GMT- IP address: 63.232.20.2

Document emailed to Halona Crowe (hcrowe@santafenm.gov) for signature
2024-10-30 - 10:56:55 PM GMT

Email viewed by Halona Crowe (hcrowe@santafenm.gov)
2024-10-31 - 1:49:38 PM GMT- IP address: 174.231.18.16

Document canceled by Amanda Archuleta (ajarchuleta@santafenm.gov)
2024-11-01 - 1:31:24 PM GMT- IP address: 63.232.20.2

Powered by Adobe Acrobat Sign

Docusign Envelope ID: 74D8647D-72EF-4265-9E97-E3F751986F87

FIRST AMENDMENT TO THE AGREEMENT FOR CONVERSION OF STREETLIGHTS OWNED BY THE PUBLIC SERVICE COMPANY OF NEW MEXICO Item #24-0120

This First Amendment to the Agreement for Conversion of Streetlights Owned by the Public Service Company of New Mexico ("First Amendment"), executed as of October ___, 2024, is by and between the Public Service Company of New Mexico, a New Mexico corporation ("PNM" or "Company"), and the City of Santa Fe ("Santa Fe" or "City"), a municipal corporation. The Parties may be referred to herein individually as "Party" or collectively as "Parties."

RECITALS

WHEREAS the Parties executed the Agreement for the Conversion of Streetlights Owned by the Public Service Company of New Mexico ("Agreement") in February of 2024;

WHEREAS the Agreement contemplated the conversion of some of the Company's streetlights into light-emitting diode ("LED") lights ("LED Streetlight Conversion Project");

WHEREAS Santa Fe has asked PNM to complete a second phase of the LED Streetlight Conversion Project, which will consist of converting an additional 957 streetlights into LED lights;

WHEREAS the City has appropriated the funds necessary to complete the second phase of the LED Streetlight Conversion Project, which PNM estimates to be Four Hundred Eighty Thousand Dollars and Zero Cents ($480,000.00); and

WHEREAS the Parties wish to amend the Agreement to contemplate the completion of the second phase of the LED Streetlight Conversion Project and payment for same by Santa Fe.

AGREEMENT

NOW, THEREFORE, in consideration of the mutual covenants herein contained, the receipt and sufficiency of which are hereby acknowledged, the Parties hereby agree to the following:

1. Paragraph 3(a) shall be amended as follows:

   Santa Fe agrees to issue a Purchase Order to PNM in the amount of Four Hundred Eighty Thousand Dollars and Zero Cents ($480,000.00) including applicable GRT for the completion of the second phase of the LED Conversion Project, which shall consist of the conversion of 957 additional streetlights into LED lights. The total amount of compensation, including the amount for the original agreement, shall not exceed $1,050,000.00 including GRT.

   The Purchase Order shall memorialize in writing Santa Fe's request that PNM convert the 957 additional Company-owned streetlights to LED lights within the City of Santa Fe in accordance with the Rate Tariff, the Agreement, and this First Amended Agreement. PNM will share with Santa Fe certain information regarding

Docusign Envelope ID: 74D8647D-72EF-4265-9E97-E3F751986F87

Company-owned streetlights, if needed, so that Santa Fe can prepare the Purchase Order contemplated by this section. Such information includes the number of Company-owned streetlights, the geographic location of Company-owned streetlights, and the types of Company-owned streetlights, categorized by light wattage. PNM will also provide Santa Fe with the cost of a conversion to an LED by listing the cost per operational substitute on Appendix A. Santa Fe agrees to include within the Purchase Order the information required by Section 3(b) of the Agreement.

2. Paragraph 1(k) shall be added to the Agreement. Paragraph 1(k) shall state as follows:

   PNM will make a good faith effort to complete the second phase of the LED Conversion Project within twelve (12) months of the execution of the First Amendment to the Agreement, although the Company cannot guarantee an exact date of completion, as such date is likely to fluctuate, and the City recognizes that the estimated timeline may change due to the lead time necessary for procuring fixtures from the manufacturer, which PNM currently estimates to be approximately 6 weeks.

Section 3. All capitalized terms used in this First Amendment and not otherwise defined or modified herein shall have the meanings set forth in the Agreement.

Section 4. Except as expressly amended by this First Amendment, all other terms of the Agreement shall remain in full force and effect.

Section 5. This First Amendment may be executed in one or more counterparts, including by facsimile or electronic signature, but each such counterpart shall be deemed an original and all such counterparts shall be deemed one and the same instrument.

Section 6. This First Amendment contains the entire understanding of the Parties and supersedes all prior agreements and understandings between the Parties relating to the subject matter herein. This First Amendment shall be binding upon and inure to the benefit of the Parties' respective successors and permitted assigns.

[Signature Page Follows]

Docusign Envelope ID: 74D8647D-72EF-4265-9E97-E3F751986F87

CITY OF SANTA FE

By: _____

Alan Webber
Mayor, City of Santa Fe, New Mexico

Attest:

_____
Geralyn Cardenas, Interim City Clerk

City Attorney's Office:

Marcos Martinez
Marcos Martinez (Oct 29, 2024 13:09 MDT)
_____
Senior Assistant City Attorney

Approved for Finances:

_____
Emily Oster, Finance Director

PUBLIC SERVICE COMPANY OF NEW MEXICO

Signed by:
By: _____
B51818D1E09D410...

Mike Mertz
PNM Vice President, New Mexico Operations

GB 600 PNM Amendment 1

Final Audit Report 2024-11-12

Created:	2024-11-12
By:	Kristy Miera (kamiera@santafenm.gov)
Status:	Signed
Transaction ID:	CBJCHBCAABAAbDMVlAb4Tr6rYaaplbS9w-UKf9FlipQa

"GB 600 PNM Amendment 1" History

Document digitally presigned by DocuSign\, Inc. (enterprisesupport@docusign.com)
2024-10-29 - 3:39:22 PM GMT- IP address: 63.232.20.2

Document created by Kristy Miera (kamiera@santafenm.gov)
2024-11-12 - 5:34:09 PM GMT- IP address: 63.232.20.2

Document sent to ALEXIS LOTERO (aclotero@santafenm.gov) and ajhopkins@santafenm.gov
ajhopkins@santafenm.gov (ajhopkins@santafenm.gov) for signature. One of them to sign
2024-11-12 - 5:35:15 PM GMT

Email viewed by ALEXIS LOTERO (aclotero@santafenm.gov)
2024-11-12 - 5:43:24 PM GMT- IP address: 104.47.64.254

Document e-signed by ALEXIS LOTERO (aclotero@santafenm.gov)
Signature Date: 2024-11-12 - 5:45:03 PM GMT - Time Source: server- IP address: 63.232.20.2

Agreement completed.
2024-11-12 - 5:45:03 PM GMT

Powered by Adobe Acrobat Sign

URGENT GB 600 PNM Amendment

Final Audit Report 2024-11-12

Created:	2024-11-12
By:	Kristy Miera (kamiera@santafenm.gov)
Status:	Canceled / Declined
Transaction ID:	CBJCHBCAABAAGsYcaxhHgdJ6Fnz9jtLpayXbL7CvZtVT

"URGENT GB 600 PNM Amendment" History

Document digitally presigned by DocuSign\, Inc. (enterprisesupport@docusign.com)
2024-10-29 - 3:39:22 PM GMT- IP address: 63.232.20.2

Document created by Kristy Miera (kamiera@santafenm.gov)
2024-11-12 - 6:28:19 PM GMT- IP address: 63.232.20.2

Document emailed to Lisa Storey (lmstorey@santafenm.gov) for signature
2024-11-12 - 6:32:28 PM GMT

Email viewed by Lisa Storey (lmstorey@santafenm.gov)
2024-11-12 - 7:18:22 PM GMT- IP address: 104.47.65.254

Document e-signed by Lisa Storey (lmstorey@santafenm.gov)
Signature Date: 2024-11-12 - 7:23:27 PM GMT - Time Source: server- IP address: 63.232.20.2

Document sent to ALEXIS LOTERO (aclotero@santafenm.gov) and Travis Dutton-Leyda (tkduttonleyda@santafenm.gov) for signature. One of them to sign
2024-11-12 - 7:23:32 PM GMT

Document canceled by Kristy Miera (kamiera@santafenm.gov)
Cancel reason: Accidentally added Alexis to the Purchasing group
2024-11-12 - 8:21:59 PM GMT- IP address: 63.232.20.2

URGENT GB 600 PNM Amendment (1)

Final Audit Report 2024-11-12

Created:	2024-11-12
By:	Kristy Miera (kamiera@santafenm.gov)
Status:	Signed
Transaction ID:	CBJCHBCAABAA9V6EeMR-889UWcqFjJOO1R01PqYFVMGl

"URGENT GB 600 PNM Amendment (1)" History

Document digitally presigned by DocuSign\, Inc. (enterprisesupport@docusign.com)
2024-10-29 - 3:39:22 PM GMT- IP address: 63.232.20.2

Document created by Kristy Miera (kamiera@santafenm.gov)
2024-11-12 - 8:25:07 PM GMT- IP address: 63.232.20.2

Document sent to JoAnn Lovato (jdlovato@santafenm.gov) and Travis Dutton-Leyda (tkduttonleyda@santafenm.gov) for signature. One of them to sign
2024-11-12 - 8:27:03 PM GMT

Email viewed by Travis Dutton-Leyda (tkduttonleyda@santafenm.gov)
2024-11-12 - 8:27:32 PM GMT- IP address: 63.232.20.2

Email viewed by JoAnn Lovato (jdlovato@santafenm.gov)
2024-11-12 - 8:48:08 PM GMT- IP address: 63.232.20.2

Document e-signed by Travis Dutton-Leyda (tkduttonleyda@santafenm.gov)
Signature Date: 2024-11-12 - 10:09:59 PM GMT - Time Source: server- IP address: 63.232.20.2

Document emailed to EMILY OSTER (ekoster@santafenm.gov) for signature
2024-11-12 - 10:10:02 PM GMT

Email viewed by EMILY OSTER (ekoster@santafenm.gov)
2024-11-12 - 10:11:18 PM GMT- IP address: 174.240.23.14

Document e-signed by EMILY OSTER (ekoster@santafenm.gov)
Signature Date: 2024-11-12 - 10:59:18 PM GMT - Time Source: server- IP address: 63.232.20.2

Agreement completed.
2024-11-12 - 10:59:18 PM GMT

City of Santa Fe
Emergency Determination Form

The emergency procurement method may only be used as described in NMSA 1978, § 13-1-127 and in the City's Procurement Manual XII.

The Department that makes an emergency procurement to plan or prepare for the response to a serious threat to public health, welfare, safety or property caused by a flood, fire, epidemic, riot, act of terrorism, equipment failure or similar event shall account for the money spent in making the procurement and report on that accounting to the City's Finance Department Director within ninety days after the end of the contract or fiscal year in which the procurement was made, whichever comes first.

I. Department: Public Utilities, City of Santa Fe

Department Director: John Dupuis

Department Contact: P. Fred Heerbrandt, P.E.

Department Telephone Number: 505-955-4623

City of SF Chief Procurement Officer: Travis Dutton-Leyda, CPO

Telephone Number: (505) 629-8351

II. Name of Contractor: SKE Contractors, LLC.

Address of Contractor: 44 Coyote Mountain Road, Santa Fe, NM 87505

Amount of prospective contract: $3,027,178

Term of prospective contract: 24 Months, Proposed Contract Attached

Location of Services: Within Call Mejia and adjacent, and adjacent to St Francis Road to its intersection with Paseo de Peralta

III. **Please thoroughly list the services (scope of work), construction or items of tangible personal property of the contract:**

Provide pipe bursting/crushing of a sanitary sewer line named as the Calle Mejia Project (Sewer line restoration from Calle Mejia to the intersection of Paso De Peralta), (The "Project"). The Project consists of replacing approximately19,500 feet of ten-inch clay sewer line with a 12-inch High Density Polyethylene (HDPE) pipe, including, Closed Circuit Television Video (CTTV) inspection, washing of the existing sanitary sewer line, and insert a new 12-inch HDPE pipe utilizing pipe bursting method following insertion procedure specification ASTM F 585.

IV. **Provide an explanation for the justification of the procurement including a description of the emergency condition(s) requiring use of emergency procurement and the practicable competition utilized in compliance with NMSA 1978, § 13-1-127.**

Within FY23, Wastewater attempted a closed-circuit television review of the Sanitary Sewer line located on Calle Mejia. While attempting to televise the existing sewer, the line collapsed on the rover. A point repair was completed within the section of the collapsed line, but when trying to repair the pipe, it continued to collapse, due to the poor condition of the clay pipe, and an expanded section was replaced. This section of Sanitary Sewer line is old and could collapse at any time blocking the sewage flow which represents a public health risk to users within the area, including sewage backing up into their houses and businesses and spilling into the road.

On 7/10/2024 I was informed of the concern, and I immediately contacted the Chief Procurement Officer and informed him of the situation and mentioned emergency procurement, I also investigated the Texas Buy Board, a Cooperative Purchasing agreement which we believed we could utilize. After additional investigation the Buy Board could not be used because New Mexico was not included within the bid Process. It is imperative that we move forward with the repairs as this Sewer Line could fail at any time creating blockage and back-ups. This would be costly for the city, with possible repairs to residents and business locations.

Public Utilities is also working to formulate a contract based on the requirements of this project, and possible liability which may arise.

V. **Please describe what measures are being taken to minimize the duration and effect of this emergency procurement (for example: is the emergency only in place until a competitive process can be completed, etc.).**

The Wastewater Management Division is addressing this situation with an Emergency Determination since based on past experience, this sewer main is at risk of imminent failure due to observed structural issues with the clay pipe. Only this previously identified length of sewer main is being addressed under this Determination.

VI. **Describe what measures the Department will take in the future to prevent/mitigate use of emergency procurement under similar circumstances.**

Sanitary Sewer rehabilitation projects are conducted periodically to address older sewer lines within the city using other procurement methods, but the timeline to acquire these services for Calle Mejia presented unacceptable risks

Certified by:



City Chief Procurement Officer, Travis Dutton-Leyda — **Date** Oct 24, 2024

City Approval by:



Department Director, John Dupuis — **Date** Oct 24, 2024



City Attorney, Erin McSherry — **Date** Oct 23, 2024



John Blair, City Manager — **Date** Oct 25, 2024



Finance Director, Emily Oster — **Date** Oct 24, 2024

Note: All emergencies must be posted to the SPD website:
https://www.generalservices.state.nm.us/statepurchasing/submit-emergency.aspx
and the City of Santa Fe's website:
https://santafenm.gov/finance-2/purchasing-1/solicitations

Calle Mejia Sewer Pipe Bursting Project
Proposal for Sanitary Sewer Pipe-bursting Project
SKE Project Number: NM001-2024
8/28/2024

ITEM #	UNIT	DESCRIPTION	EST. QUANTITY	UNIT PRICE	TOTAL PRICE
1	EA	Mobilization - CCTV (Pre/Post TV)	2	$ 8,500.00	$ 17,000.00
2	EA	Mobilization - Pipe Bursting	1	$ 51,000.00	$ 51,000.00
3	EA	Mobilization - CIPP/MH Rehab	1	$ 100,000.00	$ 100,000.00
4	WK	Traffic Control	14	$ 7,400.00	$ 103,600.00
5	LS	Bonds and Insurance	1	$ 130,000.00	$ 130,000.00
6	LF	Pre-TV and Clean Existing 10" Line	3735	$ 7.50	$ 28,012.50
7	LF	Post TV 12" Rehabilitated Lines	3735	$ 5.00	$ 18,675.00
8	HR	Extra cleaning for obstruction removal (4hr min)	12	$ 675.00	$ 8,100.00
9	LF	Pipe burst existingg 10" sanitary sewer to 12.75" OD SDR 17 HDPE, up to 12 ft deep	3735	$ 290.00	$ 1,083,150.00
10	EA	San Swr Lateral reconnection of 4" to 6" PVC (SDR35) to main using PVC saddle, includes up to 5 LF of lateral, 0-10 ft deep	6	$ 3,000.00	$ 18,000.00
11	LF	Extra length San Swr lateral 4" to 6" (SDR 35 or SCH 40, 0-10 ft deep	150	$ 115.00	$ 17,250.00
12	EA	San Swr cleanouts for laterals (SDR 35 or SCH 40, no box	6	$ 700.00	$ 4,200.00
13	EA	Obstruction removal, 0-10 ft deep	12	$ 1,300.00	$ 15,600.00
14	EA	Obstruction removal, up to 15 ft deep	2	$ 3,200.00	$ 6,400.00
15	LS	Trench safety	1	$ 33,750.00	$ 33,750.00
16	WK	Bypass pumping with flow control	12	$ 10,800.00	$ 129,600.00
17	CY	Flowable fill (If required)	10	$ 500.00	$ 5,000.00
18	TON	Select fill (If required)	40	$ 140.00	$ 5,600.00
19	LF	10" UV Cured CIPP (4.375 MM	1729	$ 220.00	$ 380,380.00
20	EA	CIPP Bypass setup	7	$ 14,500.00	$ 101,500.00
21	EA	Internal service reinstatement	25	$ 1,900.00	$ 47,500.00
22	LF	CIPP clean and TV for liner prep	1729	$ 40.00	$ 69,160.00
23	LF	Post TV liner inspection	1729	$ 9.50	$ 16,425.50
24	EA	Bench and Invert of all manholes	22	$ 3,900.00	$ 85,800.00
25	SF	1" Cementitious grout all manholes	2927	$ 60.00	$ 175,620.00
26	SF	Manhole Spraywall epoxy liner (300 MILS)	2927	$ 65.00	$ 190,255.00
27	GAL	Chemical grout as nneded	50	$ 800.00	$ 40,000.00
28	EA	Point repair, up to 10ft deep	2	$ 5,500.00	$ 11,000.00
29	EA	Pont repair, up to 15ft deep	2	$ 8,000.00	$ 16,000.00
30	SY	City Street replacement, with laydown machine, Virgin asphalt	100	$ 101.00	$ 10,100.00
31	SY	City Street replacement, w/o laydown machine, Virgin asphalt	100	$ 101.00	$ 10,100.00
32	SY	Replace City Street pavement with temporary cold patch	50	$ 95.00	$ 4,750.00
		TOTAL BASE BID			**$ 2,933,528.00**

ITEM #	UNIT	DESCRIPTION	EST. QUANTITY				
EX1	CY	Rock excavation	20	$	295.00	$	5,900.00
EX2	CY	Spoil haul-off	20	$	2,500.00	$	50,000.00
EX3	SF	Site restoration, if needed (landscape vegitation)	50	$	135.00	$	6,750.00
EX4	LF	Waterline relocation, 2" to 10" PVC	100	$	84.00	$	8,400.00
EX5	LS	Archeological required Mob/Demob	1	$	1,400.00	$	1,400.00
EX5	HR	Archeological required delay	12	$	350.00	$	4,200.00
EX6	CY	Exploratory excavation	200	$	85.00	$	17,000.00
		TOTAL EXTRA ITEMS BID				**$**	**93,650.00**

TOTAL BASE BID + EXTRA ITEMS	**$ 3,027,178.00**

CITY OF SANTA FE

Date: October 18, 2024

To: Mayor Alan Webber and Governing Body
Finance and Public Works, and Utilities Committees

Via: John Dupuis, Public Utilities Director JD

From: P. Fred Heerbrandt, P.E., Engineer Supervisor FH

Subject: Calle Mejia Sanitary Sewer Rehabilitation Project

Vendor Name: SKE Contractors, LLC

Vendor Number: 10552

ITEM AND ISSUE:
The Public Utilities Department respectfully requests your review and approval of an Emergency Determination for the rehabilitation of 19,500 feet of vitrified clay sewer pipe using a pipe bursting construction method. Request for the Approval of a construction contract in the total amount of $ 3,275,028.20, including NMGRT for construction services for a two-year period from the date of approval

Action Requested: Approval of a construction contract and a BAR in the amount of $3,275,029 from the WWMD Enterprise Fund

BACKGROUND AND SUMMARY:
The sanitary sewer line to be replaced is in Calle Mejia and proximate to the roadway and St. Frances Drive. The Project consists of installing approximately19,500 feet of twelve-inch diameter High Density Polyethylene (HDPE) pipe along the grade line of the existing ten-inch clay sewer pipe. The operation shall be conducted with a hydraulic or pneumatic pulling or pushing apparatus and a pipe expander or pipe reaming device.

PROCUREMENT METHOD:
This project is being procured by an Emergency Determination due to the poor condition of the existing pipe and high probability of a future collapse or structural failure, which could impact the sewer facilities and/or the roadway.

Chief Procurement Officer Approval: _____ **Date:** Oct 29, 2024
Comment/Exceptions: _____
Supporting Information:

CONTRACT NUMBER:
The FY25 Munis contract number is 3250255

$$$$$ SOURCE/REVENUE: ☒**Expense** | ☐**Revenue**

The funding source is:
Fund Name/Number: WWMD Enterprise Fund/Fund 500
Munis Org Name/Number: Wastewater-Capital Projects 5000375
Munis Object Name/Number: WIP Construction 572970

Budget Officer Approval: Andy Hopkins **Date:** Oct 29, 2024
Comment/Exceptions: _____

Grant ☐Yes | ☒ No

Grant #: _____

Grant Manager/Accounting Officer Approval: _____ **Date:** _____
Comment/Exceptions: _____

Project ☐Yes | ☒ No

Project Ledger #: _____

CAPITAL ASSET (will this procurement result in a tangible item that costs more than $5,000
☐Yes | ☒ No

Asset # (if known): _____

Repair or Replacement of Existing Equipment:

☒Yes | ☐ No
~If yes -> ☐Repair | ☒ Replacement

Please explain: The existing 10" VCP sewer pipe will be replaced with a 12" HDPE sewer pipe.

Capital Project:
(New and improvement projects that are going to cost $10,000 or more)
☒ Yes | ☐ No

Anticipated length of project: Contract is for two years from date of approval.

Asset Manager Approval: Lisa Storey (Oct 29, 2024 16:30 MDT) **Date:** Oct 29, 2024
Comment/Exceptions: Project will be tracked in CIP until completed

Was this service deemed construction: ☒ Yes | ☐ No
~If yes, does this expenditure exceed $25,000? ☒ Yes | ☐ No
~If yes, did you obtain the appropriate bond? ☒ Yes | ☐ No
~Performance and Payment & Labor - NMSA 1978, Section 13-4-18

Department Approvals:
IT Components: ☐ **Yes** | ☒ **No**
Vehicles: ☐ **Yes** | ☒ **No**
Facilities, Furniture, Fixtures, Equipment: ☐ **Yes** | ☒ **No**

Approval:_____ **Title:**_____ **Date**:_____
Approval:_____ **Title:**_____ **Date**:_____
Comment & Exceptions:_____

Department Contract Administrator Contact Info: P. Fred Heerbrandt, P.E., pfheerbrandt@santafenm.gov

ATTACHMENTS:

Vendor's Quote
Memo
Santa Fe Business License
Certificate of Liability Insurance
Construction Services Contract
Emergency Determination

Log # *{Finance use only}*:	
Journal # *{Finance use only}*:	

City of Santa Fe, New Mexico
BUDGET AMENDMENT RESOLUTION (BAR)

DEPARTMENT / DIVISION NAME	DATE
Public Utilities/Wastewater	9/17/2024

ITEM DESCRIPTION	ORG	OBJECT	PROJECT	INCREASE	DECREASE
EXPENDITURES				*{enter as positive #}*	*{enter as negative #}*
WIP Construction	5000375	572970		3,275,029	
REVENUES				*{enter as negative #}*	*{enter as positive #}*
				$ 3,275,029	$ -

JUSTIFICATION: *(use additional page if needed)*
--Attach supporting documentation/memo

Budget Increase from Fund 500 Cash Balances: Waste Water Enterprise Fund for SKE CONTRATORS LLC

See attached memo for additonal information.

{Complete section below if BAR results in a net change to ANY Fund}

Fund(s) Affected	Fund Balance Increase/(Decrease)
500	
TOTAL:	$ (3,275,029)

Lawrence Garcia — 9/25/2024
Prepared By *{print name}* — Date

Division Director Signature *{optional}* — Date

John Dupuis (Oct 22, 2024 09:31 MDT) — Oct 22, 2024
Department Director Signature — Date

{Use this form for Finance Committee/ City Council agenda items ONLY}

CITY COUNCIL APPROVAL

City Council Approval Date:

Agenda Item #:

Andy Hopkins — Oct 29, 2024
Budget Officer — Date

Emily K. Osler — Oct 29, 2024
Finance Director *{≤ $5,000}* — Date

City Manager *{≤ $60,000}* — Date

Item #:
Munis Contract #: 3250255
SWPA/GSA/Coop/RFP/ITB #:
Emergency

CITY OF SANTA FE

CONSTRUCTION CONTRACT

THIS CONTRACT is made and entered into by and between the City of Santa Fe, New Mexico, hereinafter referred to as the "City," and SKE Contractors, LLC. hereinafter referred to as the "Contractor," and is effective as of the date set forth below upon which it is executed by the Parties.

RECITALS

WHEREAS, the City, through its Governing Body, is authorized to enter into a construction Contract for the project; and

WHEREAS, the City has procured this Contract according to the established State and Local Purchasing procedures for contracts of the type and amount; and

The City and the Contractor hereby agree as follows:

1. Scope of Work

A. The Contractor shall perform the following work:

The Contractor shall perform all the work required by the Contract Documents. The work consists of furnishing all mobilization, equipment, labor and materials for the rehabilitation of sanitary sewer lines through pipe bursting methods as specified in the sewer line location plans and specifications and other incidental work and traffic control as required in the City of Santa Fe, New Mexico.

The contractor's attention is directed to the fact that all applicable Federal Laws, State Laws, Municipal Ordinances, and the rules and regulations of all authorities having jurisdiction over said item shall apply to the project throughout, and they will be deemed to be included in the contract documents the same as though herein written out in full.

The sanitary sewer line to be replaced is in Calle Mejia and proximate to the roadway and St. Frances Drive. The Project consists of installing approximately19,500 feet of twelve-inch diameter High Density Polyethylene (HDPE) pipe along the grade line of the existing ten-inch clay sewer pipe. The operation shall be conducted with a hydraulic or pneumatic pulling or pushing apparatus and a pipe expander or pipe reaming device. The pipe expander or reaming device shall be pushed or pulled through the existing pipe on grade, widening the existing pipe material for the insertion of the new pipe material.

SUBMITTALS

A. Submit all information, shop drawings, and product data as directed below to the owner's representative for review and approval.

B. Product Data:
    1. All pipe, fittings, and accessories to be used.
    2. The manufacturer's installation recommendations including the recommended allowable pulling force to prevent damage to the pipe.
    3. If HDPE is used, information indicating the interior color for the HDPE pipe.

C. Installation Procedure:
    1. The Contractor shall submit, in detail, the procedure and the steps to be followed for the installation of the pipe bursting system selected including, but not limited to:
        a) Traffic control plan.
        b) Layout, storage, and pipe handling areas.
        c) Plan for locating, exposing, and reconnecting service laterals.
        d) Bypass pumping plan.
        e) Point repair plan for removing sags, offset joints, constrictions, or obstructions.
    2. Any proposed changes in installation procedures shall require submittal of revised procedures and acceptance by the City.
D. Preconstruction Television Inspections.
E. Post-Construction Television Inspections.
F. Updated schedule of repairs for the segments included in the contract documents which are to be submitted after the preconstruction CCTV inspections have taken place and the segments reviewed for any modifications to the planned work.
G. Certificates:
    1. Affidavit of compliance with applicable standards.
    2. Test certificates.
    3. As requested, Certificates of Training for the processes used.

QUALITY ASSURANCE

A. The Contractor is responsible for the quality assurance and quality control of the Work.
B. Work shall be performed by a Contractor, with a proven record of performance for similar installations. Contractor shall submit the following:
    1. Contractor shall be experienced in the installation of HDPE sewer mains using the pipe bursting method of trenchless rehab for a minimum period of 5 years.
    2. Warranty:
        a) Terms: Standard Manufacturer's warranty.
        b) Contractor Warranty Period: Two year from City Acceptance.

PRODUCTS

HIGH DENSITY POLYETHYLENE (HDPE) PIPE

A. HDPE pipe for trenchless sewer line replacement shall be solid wall high density polyethylene (HDPE) pipe, meeting the requirements of ASTM F714, ASTM D1248, and ASTM D3350.
B. The pipe shall be manufactured from high density high molecular weight polyethylene resin and shall meet or exceed the requirements of ASTM D3350 for PE4710 material with a cell classification of 445474C, or better.
C. The minimum wall thickness of the HDPE shall meet the following:

1. 0-15 feet = SDR 17
2. >15 feet = SDR 15.5

D. The pipe shall have sufficient strength to withstand both service and installation loads.
E. The pipe and fitting manufacturer shall certify that samples of their production pipe have undergone stress regression testing, evaluation, and validation in accordance with ASTM D2837 and PPI TR-3. Under these procedures, the minimum hydrostatic design basis shall be certified by the pipe manufacturer to be 1600 psi at 73°F and 800 psi at 140°F.

MANHOLE ADAPTERS

A. Manhole adapters for pipes between 4 and 12 inches in diameter shall be Fernco Concrete Manhole Adapter or approved equal.

RE-ESTABLISHMENT OF SERVICE CONNECTIONS

A. Saddles:
   1. HDPE Pipe:
      a) Heat fusion saddles shall be made of polyethylene pipe that meets the minimum specified physical properties and is suitable for fusion welding.
      b) Fusion saddles shall be Branch Saddle as manufactured by Driscopipe, Miller, DuPont, or approved equal.
B. Compression Fit Connection:
   1. The connection shall be specifically designed for connection to the sewer main being installed.
   2. Service connection shall consist of a PVC hub, rubber sleeve and stainless-steel band. Rubber sleeve and gasket shall meet the requirements of ASTM F 477. Gaskets shall be installed by the manufacturer. The water-based solution provided by the manufacturer shall be used during assembly. Do not use pipe lube.
   3. Connection shall be Inserta Tee as manufactured by Inserta Fittings Co. or approved equal.
C. Non-Shear Flexible Coupling:
   1. Connections to existing service laterals shall be made using non-shear flexible couplings.
   2. All flexible couplings shall conform to ASTM Cl 173 and shall be as manufactured by Fernco Inc., MaxAdaptor or approved equal.

EXECUTION

INSTALLATION PROCEDURE

The Contractor shall submit, in detail, the procedure and the steps to be followed for the installation of the pipe bursting system selected, including location of insertion and launching pits, even if the process is named in the specification. All such instructions and procedures submitted shall be carefully followed during installation. Any proposed changes in installation procedures shall require submittal of revised procedures and acceptance by the City.

PIT LOCATIONS

Location and number of insertion or launching pits will be chosen by the Contractor and will typically be located near existing or proposed manholes, at logical breaks in the construction phasing, or at locations to comply with access or maintenance requirements.

EQUIPMENT

The Contractor shall utilize pipe bursting equipment with adequate pulling/pushing force to complete pulls in a timely manner. The Contractor shall provide equipment on the pulling mechanism to verify the pulling/pushing force exerted on the pipe does not exceed the manufacturer's recommendation for allowable pulling force to prevent damage to the pipe. Where the actual pulling force exceeds the allowable pulling force the Contractor shall take steps to reduce the pulling force necessary by either oversizing the cut or lubricating the outside pipe surface.

MINIMIZE NOISE IMPACTS

A. Means and methods should be employed and described in appropriate submittals to ensure that work of a high decibel volume is performed away from business and/or residential properties to the best extent possible. Such description shall include times and durations that are compatible with the neighborhood in which the work is being performed. No such work will be performed in the late afternoon, early evening or weekends unless described, submitted and approved in advance on projects that work outside of usual and customary hours has been previously approved.
B. Provide silencers or other approved devices to reduce machine noise, when it exceeds the City's noise ordinance.

PROTECTION

A. The Contractor shall provide protection for the general safety of workers, pedestrians and traveling public throughout this project. Existing surface improvements and underground facilities and utilities shall be the contractor's responsibility to protect and/or support. Damage caused by the Contractor shall be repaired at no expense to the City. Protection to be provided includes, but is not limited to:
    1. Barricades, warning lights and signs for excavations.
    2. The Contractor shall install all pulleys, rollers, bumpers, alignment control devices and other equipment to protect existing manholes, and to protect the pipe from damage during installation. Lubrication may be used as recommended by the manufacturer. Under no circumstances shall the pipes be stressed beyond their elastic limit.
    3. Do not allow sand, debris, or runoff to enter sewer system.
    4. Verify location of all underground utilities and facilities potentially impacted by rehabilitation or other activities and take necessary precautions to provide protection from damage. Damage caused by Contractor shall be Contractor's responsibility and repaired at Contractor's own expense, and at no additional cost to the City.
    5. Protect the new pipe and components during all phases of work, including hauling, installation, entry into the launching pit, and prevention of scarring or gouging of the pipe or components.

TELEVISION INSPECTION

A. The Contractor shall video (CCTV) inspect the sewer pipe.
B. Preconstruction Television Inspection: Pipe shall be inspected immediately prior to pipe bursting to verify the existing pipe conditions are acceptable for pipe bursting and to locate and verify all active service line connections. If existing pipe conditions are not acceptable for pipe bursting, contact the City. If there is a sag in the existing line, see paragraph SAGS IN LINE below.
C. Post-Construction Television Inspection: Contractor shall inspect the pipe after pipe bursting to locate and verify that all active service line connections were re-established.

D. Preconstruction and Post-Construction Television Inspection documentation shall be submitted to the City for review and acceptance of the Work.

SEWAGE BYPASS

When required for acceptable completion of pipe bursting, the Contractor shall provide for continuous sewage flow around the section(s) of pipe designated for the installation of replacement pipe. The pump and bypass lines shall be of adequate size and capacity to handle the flow. A backup pumping system shall be available on-site if the primary system fails.

SAGS IN LINE

A. If the Pre-Installation CCTV reveals an unidentified sag in the existing sewer, the Contractor shall inform the City and request direction. The city may require the Contractor to eliminate the sag and install new pipe at a uniform grade prior to pipe bursting the remaining portion of the pipe segment. If the sag has been identified in the Contract Documents, the Contractor shall address the sag as directed in the Contract Documents prior to pipe bursting.
B. If post-installation video (CCTV) inspection reveals a sag in the new line where none existed prior to the Work being performed, the Contractor shall remove or repair the sag at no additional cost to the City.

SERVICE LATERALS AND CONNECTIONS

A. Existing service connections shall be located and exposed before initiating sewer main replacement operations. All service laterals attached to the existing sewer shall be completely disconnected and isolated from the existing sewer before the pipe bursting operations. Service laterals shall not be reconnected to the new sewer line until the new line is installed. Any services remaining offline for more than 12 hours, or any connections deemed necessary by the City to protect the customer, shall be bypass pumped until such time that they can be reconnected.
B. Reconnection of service laterals to the installed pipe shall be accomplished using an approved method.

PIPE JOINING

A. HDPE Pipe:
    1. The HDPE pipe shall be assembled and joined at the site using the butt-fusion method conforming to ASTM D2657 to provide a leak proof joint. All equipment and procedures used shall be used in strict compliance with the manufacturer's recommendations. Fusing shall be accomplished by personnel certified as fusion technicians by a manufacturer of HDPE pipe and/or fusing equipment.
    2. The butt-fused joint shall be in true alignment and shall have uniform roll-back beads resulting from the use of proper temperature and pressure. The joint shall be allowed adequate cooling time before removal of pressure. The fused joint shall be watertight and shall have tensile strength equal to or greater than that of the pipe.
    3. All internal beads shall be removed after the cooling time using a suitable bead removal tool. Use of the bead removal tool shall not induce any slits, gouges or defects in the pipe wall. The beads shall be bent back at several positions. No evidence of the bead splitting shall be seen. If the bead is seen to split at any point, then the joint shall be cut from the pipeline and remade. If a similar defect recurs, all further production jointing shall cease

until the equipment has been thoroughly cleaned and examined. New trial joints shall be made and shown to be satisfactory.

4. All defective joints shall be cut out and replaced at no additional cost to the City. All joints shall be subject to acceptance by the City and/or his representative prior to insertion. Any section of the pipe with a gash, blister, abrasion, nick, scar, or other deleterious fault greater in depth than ten percent (10%) of the wall thickness, shall not be used and must be removed from the site. However, a defective area of the pipe may be cut out and joint fused in accordance with the procedures stated above. In addition, any section of the pipe having other defects such as concentrated ridges, discoloration, excessive spot roughness, pitting, variable wall thickness or any other defect of manufacturing or handling as determined by the City and/or his representative shall be discarded and not used.
5. The wall color of the interior pipe surfaces shall be light green or other color approved by the City so that a clear detail examination with CCTV inspection equipment may be made. Product data indicating the interior color to be used shall be submitted for review and approval.

HDPE PIPE RELAXATION AND COOLING

The installed pipe shall be allowed the manufacturer's recommended amount of time, but not less than four (4) hours, for cooling and relaxation due to tensile stressing prior to any reconnection of any service lines, sealing of the annulus or backfilling of the insertion pit. Four (4) inches to eight (8) inches of excess length of new pipe shall be allowed to protrude into the manhole.

MANHOLE SEALING

A. Existing Manholes:
   1. A manhole adapter shall be placed circumferentially on the replacement pipe and encased with a non-shrink grout to prevent infiltration into the manhole.
   2. The manhole adapter shall be installed in accordance with manufacturer's recommendations.
   3. Non-shrink grout shall be installed in accordance with Section 03370 - Sewer Manhole Construction.
B. New Manholes:
   1. Where new manholes are installed in conjunction with pipe bursting, the manhole shall be sealed in accordance with Section 03370 - Sanitary Sewer Manhole Construction.

FIELD QUALITY CONTROL

A. Prior to service line reinstatement, all pipelines shall be tested in accordance with City Standards.
B. If air testing is not possible, the Contractor shall notify the City for further direction.

PROTECTION OF WORK AND PROPERTY

A. The Contractor shall always safely guard the Owner's property from injury or loss in connection with this contract.
B. The Contractor will bear all costs if any damage occurs due to poor weather, etc., while excavation is open.
C. The Contractor will construct the project without any damage to adjacent property, sidewalks, street,

vegetation, etc., unless specifically called out on the drawings to be removed and/or removed and replaced. If damage does occur, Contractor will bear all costs of repair and restoration to its original state.

PUBLIC RELATIONS

The Contractor shall cooperate with the City's Authorized Representative in maintaining a high degree of sensitivity to the needs of property and residence owners along the routes at the various project sites. The use of door hangers and/or personal visits to each affected residence informing them of the Work at least two days prior to beginning the Work is required. The Contractor shall prepare a brief and concise Fact Sheet of the proposed closures for submittal to the City's Office of Public Affairs (505-955-6045) of the planned construction activities one week in advance of the construction activity. This shall also include information for a Fact Sheet regarding public health concerns and the construction process. The Contractor may be required to contact public/private agencies at the direction of the City's Office of Public Affairs. The Contractor shall provide the City's Authorized Representative with a copy of each Fact Sheet that is sent to the City's Office of Public Affairs. The preparation and delivery of the door hangers, visits, and Fact Sheet will not be a separate pay item but shall be considered incidental to the work in executing the construction contract.

2. Compensation

A. The City shall pay to the Contractor in full payment for services satisfactorily performed as described in Exhibit "A" attached and incorporated herein. such compensation not to exceed three million twenty-seven thousand one hundred and seventy-eight dollars ($3,027,178.00), excluding gross receipts tax. The New Mexico gross receipts tax levied on the amounts payable under this Contract shall be paid by the City to the Contractor, as follows:

The Unit Bid Contract Total is determined as follows:

Base Bid (OR BID ALTERNATE A)	$ 3,027,178
Gross Receipts Tax (8.1875%)	$ 247,850.20
Base Bid (OR BID ALTERNATE A) including NMGRT	$ 3,275,028.20

The total amount payable to the Contractor under this Contract, including Alternates (if needed) gross receipts tax and expenses, shall not exceed three million two hundred seventy-five thousand twenty-eight dollars and twenty cents, ($3,275,028.20) including NM gross receipts tax. This amount is a maximum and not a guarantee that the work assigned to be performed by Contractor under this Contract shall equal the amount stated herein. The parties do not intend for the Contractor to continue to provide services without compensation when the total compensation amount is reached. Contractor is responsible for notifying the City when the services provided under this Contract reach the total compensation amount. In no event will the Contractor be paid for services provided in excess of the total compensation amount without this Contract being amended in writing prior to those services in excess of the total compensation amount being provided.

B. Payment is subject to availability of funds pursuant to the Appropriations Paragraph set forth below and to any negotiations between the parties from year to year pursuant to Paragraph 1, Scope of

Work, and to approval by the City. All invoices MUST BE received by the City no later than thirty 30) days after the termination of the Fiscal Year in which the services were delivered. Invoices received after such date WILL NOT BE PAID.

C. Contractor must submit a detailed statement accounting for all services performed and expenses incurred. If the City finds that the services are not acceptable, within thirty days after the date of receipt of written notice from the Contractor that payment is requested, it shall provide the Contractor a letter of exception explaining the defect or objection to the services, and outlining steps the Contractor may take to provide remedial action. Upon certification by the City that the services have been received and accepted, payment shall be tendered to the Contractor within twenty-one days after the date of acceptance. If payment is made by mail, the payment shall be deemed tendered on the date it is postmarked.

D. If the City fails to pay the contractor within twenty-one days after receipt of an undisputed request for payment, the City shall pay interest to the contractor beginning on the twenty-second day after payment was due, computed at one and one-half percent of the undisputed amount per month or fraction of a month until the payment is issued. If the City receives an improperly completed invoice, the City shall notify the sender of the invoice within seven days of receipt in what way the invoice is improperly completed, and the owner has no further duty to pay on the improperly completed invoice until it is resubmitted as complete.

E. **Notice of Extended Payment Provision for Grant Funded Contracts**. This contract allows the City to make payment within 45 days after submission of an undisputed request for payment for contracts funded by grant money consistent with NMSA 1978, sec. 57-28-5(B).

3. Term

THIS CONTRACT SHALL NOT BECOME EFFECTIVE UNTIL APPROVED IN WRITING BY THE CITY. This contract shall terminate two (2) years from date of final signature. The City reserves the right to renew this contract on an annual basis by mutual agreement not to exceed a total of ten (10) years in accordance with NMSA 1978, Sections 13-1-150 through 152.

4. Termination

A. Grounds. The City may terminate this Contract for convenience or cause. For contracts within their authority, the City Manager or their designee is authorized to provide the notice of termination, otherwise such notice of termination shall be provided by the Mayor or their designee as authorized by the Governing Body. The Contractor may only terminate this Contract based upon the City's uncured, material breach of this Contract.

B. Notice; City Opportunity to Cure.

1) Except as otherwise provided in Paragraphs 7.A and 17, the City shall give Contractor written notice of termination at least thirty (30) days prior to the intended date of termination.

2) Contractor shall give City written notice of termination at least thirty (30) days prior to the intended date of termination, which notice shall (i) identify all the City's material breaches of this Contract upon which the termination is based and (ii) state what the City must do to cure such material breaches. Contractor's notice of termination shall only be effective (i) if the City does not cure all material breaches within the thirty (30) day notice period or (ii) in the case of material breaches that cannot be cured within thirty (30) days, the City does not, within the thirty

(30) day notice period, notify the Contractor of its intent to cure and begin with due diligence to cure the material breach.

3) Notwithstanding the foregoing, this Contract may be terminated immediately upon written notice to the Contractor (i) if the Contractor becomes unable to perform the services contracted for, as determined by the City; (ii) if, during the term of this Contract, the Contractor is suspended or debarred by the City; or (iii) the Contract is terminated pursuant to Paragraph 5, "Appropriations," of this Contract.

C. Liability. Except as otherwise expressly allowed or provided under this Contract, the City's sole liability upon termination shall be to pay for acceptable work performed prior to the Contractor's receipt or issuance of a notice of termination; provided, however, that a notice of termination shall not nullify or otherwise affect either party's liability for pre-termination defaults under or breaches of this Contract. The Contractor shall submit an invoice for such work within thirty (30) days of receiving or sending the notice of termination. *THIS PROVISION IS NOT EXCLUSIVE AND DOES NOT WAIVE THE CITY'S OTHER LEGAL RIGHTS AND REMEDIES CAUSED BY THE CONTRACTOR'S DEFAULT/BREACH OF THIS CONTRACT.*

5. Appropriations

The terms of this Contract are contingent upon sufficient appropriations and authorization being made by the Governing Body for the performance of this Contract. If sufficient appropriations and authorization are not made by the Governing Body, this Contract shall terminate immediately upon written notice being given by the City to the Contractor. The City's decision as to whether sufficient appropriations are available shall be accepted by the Contractor and shall be final. If the City proposes an amendment to the Contract to unilaterally reduce funding, the Contractor shall have the option to terminate the Contract or to agree to the reduced funding, within thirty (30) days of receipt of the proposed amendment.

6. Status of Contractor

The Contractor and its agents and employees are independent contractors performing construction services for the City and are not employees of the City. The Contractor and its agents and employees shall not accrue leave, retirement, insurance, bonding, use of City vehicles, or any other benefits afforded to employees of the City as a result of this Contract. The Contractor acknowledges that all sums received hereunder are reportable by the Contractor for tax purposes, including without limitation, self-employment and business income tax. The Contractor agrees not to purport to bind the City unless the Contractor has express written authority to do so, and then only within the strict limits of that authority.

7. Construction Contract Performance and Payment Bond

A. When a construction contract is awarded in excess of twenty-five thousand dollars ($25,000), the following bonds or security shall be delivered to the City and shall become binding on the parties upon the execution of the contract. If the Contractor fails to deliver the required performance and payment bonds, the Contractor's bid shall be rejected, its bid security shall be enforced to the extent of actual damages. Award of the contract shall be made pursuant to the Procurement Code in the following manner:

(1) a performance bond satisfactory to the City, executed by a surety company authorized to do business in this state and said surety to be approved in federal circular 570 as published by the United States treasury department or the state board of finance or the local governing authority, in an amount equal to one hundred percent of the price specified in the contract; and

(2) a payment bond satisfactory to the City, executed by a surety company authorized to do business in this state and said surety to be approved in federal circular 570 as published by the

United States treasury department or the state board of finance or the local governing authority, in an amount equal to one hundred percent of the price specified in the contract, for the protection of all persons supplying labor and material to the contractor or its subcontractors for the performance of the work provided for in the contract.

B. A subcontractor shall provide a performance and payment bond on a public works building project if the subcontractor's contract for work to be performed on a project is one hundred twenty-five thousand dollars ($125,000) or more.

8. Assignment

The Contractor shall not assign or transfer any interest in this Contract or assign any claims for money due or to become due under this Contract without the prior written approval of the City.

9. Subcontracting

The Contractor shall not subcontract any portion of the services to be performed under this Contract without the prior written approval of the City. No such subcontract shall relieve the primary Contractor from its obligations and liabilities under this Contract, nor shall any subcontract obligate direct payment from the City.

10. Release

Final payment of the amounts due under this Contract shall operate as a release of the City, its officers and employees from all liabilities, claims and obligations whatsoever arising from or under this Contract.

11. Confidentiality

Any confidential information provided to or developed by the Contractor in the performance of this Contract shall be kept confidential and shall not be made available to any individual or organization by the Contractor without the prior written approval of the City.

12. Product of Service -- Copyright

All materials developed or acquired by the Contractor under this Contract shall become the property of the City and shall be delivered to the City no later than the termination date of this Contract. Nothing developed or produced, in whole or in part, by the Contractor under this Contract shall be the subject of an application for copyright or other claim of ownership by or on behalf of the Contractor.

13. Conflict of Interest; Governmental Conduct Act

A. The Contractor represents and warrants that it presently has no interest and, during the term of this Contract, shall not acquire any interest, direct or indirect, which would conflict in any manner or degree with the performance or services required under the Contract.

B. The Contractor further represents and warrants that it has complied with, and, during the term of this Contract, will continue to comply with, and that this Contract complies with all applicable provisions of the Governmental Conduct Act, Chapter 10, Article 16 NMSA 1978.

C. Contractor’s representations and warranties in Paragraphs A and B of this Article 12 are material representations of fact upon which the City relied when this Contract was entered into by the parties. Contractor shall provide immediate written notice to the City if, at any time during the term of this Contract, Contractor learns that Contractor’s representations and warranties in Paragraphs A and B of this Article 12 were erroneous on the effective date of this Contract or have become erroneous by reason of

new or changed circumstances. If it is later determined that Contractor's representations and warranties in Paragraphs A and B of this Article 12 were erroneous on the effective date of this Contract or have become erroneous by reason of new or changed circumstances, in addition to other remedies available to the City and notwithstanding anything in the Contract to the contrary, the City may immediately terminate the Contract.

D. All terms defined in the Governmental Conduct Act have the same meaning in this section.

14. Amendment

A. This Contract shall not be altered, changed or amended except by instrument in writing executed by the parties hereto and all other required signatories.

B. If the City proposes an amendment to the Contract to unilaterally reduce funding due to budget or other considerations, the Contractor shall, within thirty (30) days of receipt of the proposed Amendment, have the option to terminate the Contract, pursuant to the termination provisions as set forth in Article 4 herein, or to agree to the reduced funding.

15. Change Orders

A. Changes. The Contractor may only make changes or revisions within the Scope of Work as defined by Article 1 and/or Exhibit 1 after receipt of written approval by the City Manager or his/her designee. Such change may only be made to Tasks or Sub-Task as defined in the Scope of Work. Under no circumstance shall such change affect the:

1) Deliverable requirements, as outlined in the Scope of Work;
2) Due date of any Deliverable, as outlined in the Scope of Work;
3) Compensation of any Deliverable, as outlined in the Scope of Work;
4) Contract compensation, as outlined in Article 2; or
5) Contract termination, as outlined in Article 4.

B. Change Request Process. In the event that circumstances warrant a change to accomplish the Scope of Work as described above, a Change Request shall be submitted that meets the following criteria:

1) The Project Manager shall draft a written Change Request for review and approval by the City Manager to include:
   (a) the name of the person requesting the change;
   (b) a summary of the required change;
   (c) the start date for the change;
   (d) the reason and necessity for change;
   (e) the elements to be altered; and
   (f) the impact of the change.

2. The City Manager shall provide a written decision on the Change Request to the Contractor within a maximum of ten (10) Business Days of receipt of the Change Request. All decisions made by the City Manager are final. Change Requests, once approved, become a part of the Contract, and become binding as a part of the original Contract.

16. Merger

This Contract incorporates all the agreements, covenants, and understandings between the parties hereto concerning the subject matter hereof, and all such covenants, agreements and understandings have been merged into this written contract.

No prior Agreement or understanding, oral or otherwise, of the parties or their agents shall be valid or enforceable unless embodied in this Contract.

17. Penalties for violation of law

NMSA 1978, sections 13-1-28 through 13-1-199, imposes civil and criminal penalties for its violation. In addition, the New Mexico criminal statutes impose felony penalties for illegal bribes, gratuities and kickbacks.

18. Equal Opportunity Compliance

The Contractor agrees to abide by all federal and state laws and rules and regulations, and Santa Fe City Code, pertaining to equal employment opportunity. In accordance with all such laws of the State of New Mexico, the Contractor assures that no person in the United States shall, on the grounds of race, religion, color, national origin, ancestry, sex, age, physical or mental handicap, or serious medical condition, spousal affiliation, sexual orientation or gender identity, be excluded from employment with or participation in, be denied the benefits of, or be otherwise subjected to discrimination under any program or activity performed under this Contract. If Contractor is found not to be in compliance with these requirements during the life of this Contract, Contractor agrees to take appropriate steps to correct these deficiencies.

19. Applicable Law

The laws of the State of New Mexico shall govern this Contract, without giving effect to its choice of law provisions. Venue shall be proper only in a New Mexico court of competent jurisdiction in accordance with NMSA 1978, section 38-3-2. By execution of this Contract, Contractor acknowledges and agrees to the jurisdiction of the courts of the State of New Mexico over any and all lawsuits arising under or out of any term of this Contract.

20. Workers Compensation

The Contractor agrees to comply with state laws and rules applicable to workers compensation benefits for its employees. If the Contractor fails to comply with the Workers Compensation Act and applicable rules when required to do so, this Contract may be terminated by the City.

21. Other Insurance

If the services contemplated under this Contract will be performed on or in City facilities or property, Contractor shall maintain in force during the entire term of this Contract, the following insurance coverage(s), naming the City as additional insured.

A. Commercial General Liability insurance shall be written on an occurrence basis and be a broad as ISO Form CG 00 01 with limits not less than $2,000,000 per occurrence and $2,000,000 in the aggregate for claims against bodily injury, personal and advertising injury, and property damage. Said policy shall include broad form Contractual Liability coverage and be endorsed to name the City of Santa Fe their officials, officers, employees, and agents as additional insureds.

B. Business Automobile Liability insurance for all owned, non-owned automobiles, with a combined single limit not less than $1,000,000 per accident.

C. Broader Coverage and Limits. The insurance requirements under this Contract shall be the greater of (1) the minimum coverage and limits specified in this Contract, or (2) the broader coverage and maximum limits of coverage of any insurance policy or proceeds available to the Named Insured. It is agreed that these insurance requirements shall not in any way act to reduce coverage that is broader or that includes higher limits than the minimums required herein. No representation is made that the minimum insurance requirements of this Contract are sufficient to cover the obligations of Contractor hereunder.

D. Contractor shall maintain the above insurance for the term of this Contract and name the City as an additional insured and provide for 30 days cancellation notice on any Certificate of Insurance form furnished by Contractor. Such certificate shall also specifically state the coverage provided under the policy is primary over any other valid and collectible insurance and provide a waiver of subrogation.

22. Records and Financial Audit

The Contractor shall maintain detailed time and expenditure records that indicate the date; time, nature and cost of services rendered during the Contract's term and effect and retain them for a period of three (3) years from the date of final payment under this Contract. The records shall be subject to inspection by the City. The City shall have the right to audit billings both before and after payment. Payment under this Contract shall not foreclose the right of the City to recover excessive or illegal payments

23. Indemnification

The Contractor shall defend, indemnify and hold harmless the City from all actions, proceeding, claims, demands, costs, damages, attorneys' fees and all other liabilities and expenses of any kind from any source which may arise out of the performance of this Contract, caused by the negligent act or failure to act of the Contractor, its officers, employees, servants, subcontractors or agents, or if caused by the actions of any client of the Contractor resulting in injury or damage to persons or property during the time when the Contractor or any officer, agent, employee, servant or subcontractor thereof has or is performing services pursuant to this Contract. In the event that any action, suit or proceeding related to the services performed by the Contractor or any officer, agent, employee, servant or subcontractor under this Contract is brought against the Contractor, the Contractor shall, as soon as practicable but no later than two (2) days after it receives notice thereof, notify the legal counsel of the City.

24. New Mexico Tort Claims Act

Any liability incurred by the City of Santa Fe in connection with this Contract is subject to the immunities and limitations of the New Mexico Tort Claims Act, Section 41-4-1, et. seq. NMSA 1978, as amended. The City and its "public employees" as defined in the New Mexico Tort Claims Act, do not waive sovereign immunity, do not waive any defense and do not waive any limitation of liability pursuant to law. No provision in this Contract modifies or waives any provision of the New Mexico Tort Claims Act.

25. Invalid Term or Condition

If any term or condition of this Contract shall be held invalid or unenforceable, the remainder of this

Contract shall not be affected and shall be valid and enforceable.

26. Enforcement of Contract

A party's failure to require strict performance of any provision of this Contract shall not waive or diminish that party's right thereafter to demand strict compliance with that or any other provision. No waiver by a party of any of its rights under this Contract shall be effective unless express and in writing, and no effective waiver by a party of any of its rights shall be effective to waive any other rights.

27. Notices

Any notice required to be given to either party by this Contract shall be in writing and shall be delivered in person, by courier service or by U.S. mail, either first class or certified, return receipt requested, postage prepaid, as follows:

To the City: P. Fred Heerbrandt, P.E.
73 Paseo Real
Santa Fe, NM 87507
pfheerbrandt@santafenm.gov

To the Contractor: Brent Costlow
44 Coyote Mountain Road
Santa Fe, NM 87505
Brent@ske1.net

28. Authority

If Contractor is other than a natural person, the individual(s) signing this Contract on behalf of Contractor represents and warrants that he or she has the power and authority to bind Contractor, and that no further action, resolution, or approval from Contractor is necessary to enter into a binding contract.

29. Progress Payments

Based upon Application for Payment submitted to the City by the Contractor and Certificates for Payment issued by the City, the City shall make progress payments on account of the Contract sum to the Contractor as provided in the Contract documents for the period ending the last day of the month as follows:

Not later than twenty-one (21) days following the end of the period covered by the Application for Payment, one hundred percent (100%) of the portion of the Contract Sum properly allocable to labor, materials, and equipment incorporated in the work and one hundred percent (100%) of the portion of the Contract sum properly allocable to materials and equipment suitably stored at the site or some other location agreed upon in writing for the period covered by the Application for Payment, less the aggregate of previous payments made by the City; and upon substantial completion of the entire work, a sum sufficient to increase the total payments to one hundred percent (100%) of the Contract sum, less such amounts as the City shall determine for all incomplete work and unsettled claims as provided in the Contract documents.

30. Final Payment

Final payment, constituting the entire unpaid balance of the Contract sum, unless it is a disputed payment, shall be paid by the City to the Contractor within twenty-one (21) calendar days, after all deficiencies to the Contract document that were noted during the Substantial Completion Inspection and listed on the attachment to

the Certificate of Substantial Completion have been corrected, and provided the Contract has been fully performed and a final Certificate for Payment has been issued by the City. In addition, the Contractor shall provide to the City a certified statement of Release of Lien (AIA Document G706A or approved form), Consent of Surety, Warranty from Prime Contractor, Warranties from Suppliers and Manufacturers, training sessions, equipment/operating manuals, and as-built drawings.

31. Schedule

The Contractor shall, within five (5) days after the effective date of Notice to Proceed, prepare and submit a progress schedule covering project operations for the 30-day Contract period. This progress schedule shall be of the type generally referred to as a Critical Path Method (CPM), Critical Path Schedule (CPS), and Critical Path Analysis (CPA), and other similar designations. The CPM shall be used to control the timing and sequences of the project. All work shall be done in accordance with the CPM Planning and Scheduling. A written statement of explanation shall be submitted with the progress schedule. All costs incurred by the contractor to implement the CPM shall be borne by the Contractor and are part of their Contract.

32. General and Special Provisions

A. Terms used in this Contract which are defined in the Conditions of the Contract shall have the meanings designated in those Conditions.

B. An enumeration of the Contractor's General Comprehensive Liability Insurance requirements appears in the General Conditions of the Contract for construction. Insurance requirements are also described in the Instructions to the Bidder section of the Project Manual. Contractor shall maintain adequate insurance in at least the maximum amounts, which the City could be liable under the New Mexico Tort Claims Act and shall provide proof of such insurance coverage to the City. It is the sole responsibility of the Contractor to comply with the law.

C. This Contract shall not become effective until: (1) approved by the Governing Body; and (2) signed by all parties required to sign this Contract.

D. The Contractor shall maintain detailed time records which indicate the date, time and nature of services rendered. These records shall be subject to inspection by the City, the Department of Finance and Administration and the State Auditor. The City shall have the right to audit billings both before and after payment. Payment under this Contract shall not foreclose the right of the City to recover excessive illegal payments.

E. The Contractor warrants that the Contractor presently has no interest and shall not acquire any interest, direct or indirect, which would conflict in any manner or degree with the performance or services required under this Contract.

F. The Contractor hereby warrants that the Contractor complies with the Americans with Disabilities Act, 29 CFR 1630.

G. Gender, Singular/Plural. Words of any gender used in this Contract shall be held and construed to include any other gender, and words in the singular number shall be held to include the plural, unless the context otherwise requires.

H. Captions and Section Headings. The captions and section headings contained in this Contract are for convenience of reference only, and in no way limit, define, or enlarge the terms, scope, and conditions of this Contract.

I. Certificates and Documents Incorporated. All certificates and documentation required by the provisions of the Contract shall be attached to this Contract at the time of execution and are hereby incorporated by reference as though set forth in full in this Contract to the extent they are consistent with its conditions and terms.

J. Separability. If any clause or provision of this Contract is illegal, invalid or unenforceable under present or future laws effective during the term of this Contract, then and in that event, it is the intention of the parties hereto that the remainder of this Contract shall not be affected thereby.

K. Words and Phrases. Words, phrases, and abbreviations, which have well-known technical or trade meanings used in the Contract documents shall be used according to such recognized meaning. In the event of a conflict, the more stringent meaning shall govern.

L. Relationship of Contract Documents. The Contract Documents are complementary, and any requirement of one Contract Document shall be as binding as if required by all.

M. Pursuant to NMSA 1978, section 13-1-191, reference is hereby made to the Criminal Laws of New Mexico (including NMSA 1978, sections 30-14-1, 30-24-2, and 30-41-1 through 30-41-3) which prohibit bribes, kickbacks, and gratuities, violation of which constitutes a felony. Further, the Procurement Code (NMSA 1978, sections 13-1-28 through 13-1-199) imposes civil and criminal penalties for its violation.

N. Pursuant to NMSA 1978, section 13-4-11. Reference is hereby made to the Minimum Wage on Public Works; weekly payments; posting wage scale; withholding funds.

IN WITNESS WHEREOF, the Parties have executed this Contract as of the date of the signature by the required approval authorities below.

CITY OF SANTA FE:

_____
ALAN WEBBER, MAYOR

DATE: _____

CONTRACTOR:
SKE Contractors, LLC

Karl Eberhart
Karl Eberhart (Oct 15, 2024 15:20 CDT)
KARL EBERHADT, PRESIDENT

DATE: Oct 15, 2024

City of SF Business License #: 238295

ATTEST:

_____
GERALYN CARDENAS, INTERIM CITY CLERK

CITY ATTORNEY'S OFFICE:

Marcos Martinez
Marcos Martinez (Oct 15, 2024 14:23 MDT)
_____
SENIOR ASSISTANT CITY ATTORNEY

APPROVED FOR FINANCES:

Emily K. Oster
_____
FINANCE DIRECTOR

Calle Mejia Sewer Pipe Bursting Project
Proposal for Sanitary Sewer Pipe-bursting Project
SKE Project Number: NM001-2024
8/28/2024

ITEM #	UNIT	DESCRIPTION	EST. QUANTITY	UNIT PRICE	TOTAL PRICE
1	EA	Mobilization - CCTV (Pre/Post TV)	2	$ 8,500.00	$ 17,000.00
2	EA	Mobilization - Pipe Bursting	1	$ 51,000.00	$ 51,000.00
3	EA	Mobilization - CIPP/MH Rehab	1	$ 100,000.00	$ 100,000.00
4	WK	Traffic Control	14	$ 7,400.00	$ 103,600.00
5	LS	Bonds and Insurance	1	$ 130,000.00	$ 130,000.00
6	LF	Pre-TV and Clean Existing 10" Line	3735	$ 7.50	$ 28,012.50
7	LF	Post TV 12" Rehabilitated Lines	3735	$ 5.00	$ 18,675.00
8	HR	Extra cleaning for obstruction removal (4hr min)	12	$ 675.00	$ 8,100.00
9	LF	Pipe burst existingg 10" sanitary sewer to 12.75" OD SDR 17 HDPE, up to 12 ft deep	3735	$ 290.00	$ 1,083,150.00
10	EA	San Swr Lateral reconnection of 4" to 6" PVC (SDR35) to main using PVC saddle, includes up to 5 LF of lateral, 0-10 ft deep	6	$ 3,000.00	$ 18,000.00
11	LF	Extra length San Swr lateral 4" to 6" (SDR 35 or SCH 40, 0-10 ft deep	150	$ 115.00	$ 17,250.00
12	EA	San Swr cleanouts for laterals (SDR 35 or SCH 40, no box	6	$ 700.00	$ 4,200.00
13	EA	Obstruction removal, 0-10 ft deep	12	$ 1,300.00	$ 15,600.00
14	EA	Obstruction removal, up to 15 ft deep	2	$ 3,200.00	$ 6,400.00
15	LS	Trench safety	1	$ 33,750.00	$ 33,750.00
16	WK	Bypass pumping with flow control	12	$ 10,800.00	$ 129,600.00
17	CY	Flowable fill (If required)	10	$ 500.00	$ 5,000.00
18	TON	Select fill (If required)	40	$ 140.00	$ 5,600.00
19	LF	10" UV Cured CIPP (4.375 MM	1729	$ 220.00	$ 380,380.00
20	EA	CIPP Bypass setup	7	$ 14,500.00	$ 101,500.00
21	EA	Internal service reinstatement	25	$ 1,900.00	$ 47,500.00
22	LF	CIPP clean and TV for liner prep	1729	$ 40.00	$ 69,160.00
23	LF	Post TV liner inspection	1729	$ 9.50	$ 16,425.50
24	EA	Bench and Invert of all manholes	22	$ 3,900.00	$ 85,800.00
25	SF	1" Cementitious grout all manholes	2927	$ 60.00	$ 175,620.00
26	SF	Manhole Spraywall epoxy liner (300 MILS)	2927	$ 65.00	$ 190,255.00
27	GAL	Chemical grout as nneded	50	$ 800.00	$ 40,000.00
28	EA	Point repair, up to 10ft deep	2	$ 5,500.00	$ 11,000.00
29	EA	Pont repair, up to 15ft deep	2	$ 8,000.00	$ 16,000.00
30	SY	City Street replacement, with laydown machine, Virgin asphalt	100	$ 101.00	$ 10,100.00
31	SY	City Street replacement, w/o laydown machine, Virgin asphalt	100	$ 101.00	$ 10,100.00
32	SY	Replace City Street pavement with temporary cold patch	50	$ 95.00	$ 4,750.00
		TOTAL BASE BID			**$ 2,933,528.00**

EXHIBIT A

ITEM #	UNIT	DESCRIPTION	EST. QUANTITY		
EX1	CY	Rock excavation	20	$ 295.00	$ 5,900.00
EX2	CY	Spoil haul-off	20	$ 2,500.00	$ 50,000.00
EX3	SF	Site restoration, if needed (landscape vegitation)	50	$ 135.00	$ 6,750.00
EX4	LF	Waterline relocation, 2" to 10" PVC	100	$ 84.00	$ 8,400.00
EX5	LS	Archeological required Mob/Demob	1	$ 1,400.00	$ 1,400.00
EX5	HR	Archeological required delay	12	$ 350.00	$ 4,200.00
EX6	CY	Exploratory excavation	200	$ 85.00	$ 17,000.00
		TOTAL EXTRA ITEMS BID			**$ 93,650.00**

TOTAL BASE BID + EXTRA ITEMS	**$ 3,027,178.00**

CERTIFICATE OF LIABILITY INSURANCE

DATE (MM/DD/YYYY): 7/23/2024

THIS CERTIFICATE IS ISSUED AS A MATTER OF INFORMATION ONLY AND CONFERS NO RIGHTS UPON THE CERTIFICATE HOLDER. THIS CERTIFICATE DOES NOT AFFIRMATIVELY OR NEGATIVELY AMEND, EXTEND OR ALTER THE COVERAGE AFFORDED BY THE POLICIES BELOW. THIS CERTIFICATE OF INSURANCE DOES NOT CONSTITUTE A CONTRACT BETWEEN THE ISSUING INSURER(S), AUTHORIZED REPRESENTATIVE OR PRODUCER, AND THE CERTIFICATE HOLDER.

IMPORTANT: If the certificate holder is an ADDITIONAL INSURED, the policy(ies) must have ADDITIONAL INSURED provisions or be endorsed. If SUBROGATION IS WAIVED, subject to the terms and conditions of the policy, certain policies may require an endorsement. A statement on this certificate does not confer rights to the certificate holder in lieu of such endorsement(s).

PRODUCER Higginbotham Insurance Agency, Inc. 1400 FM 528, Suite F Webster TX 77598	**CONTACT NAME:** Sarah Sowinski **PHONE (A/C, No, Ext):** 281-990-6051 **FAX (A/C, No):** 281-990-6052 **E-MAIL ADDRESS:** ssowinski@Higginbotham.com
	INSURER(S) AFFORDING COVERAGE / **NAIC #** **INSURER A :** State Automobile Mutual Insurance Company / 25135
INSURED SKECO SKE Contractors, LLC P.O. Box 1111 Cypress TX 77410	**INSURER B :** **INSURER C :** **INSURER D :** **INSURER E :** **INSURER F :**

COVERAGES **CERTIFICATE NUMBER:** 535747730 **REVISION NUMBER:**

THIS IS TO CERTIFY THAT THE POLICIES OF INSURANCE LISTED BELOW HAVE BEEN ISSUED TO THE INSURED NAMED ABOVE FOR THE POLICY PERIOD INDICATED. NOTWITHSTANDING ANY REQUIREMENT, TERM OR CONDITION OF ANY CONTRACT OR OTHER DOCUMENT WITH RESPECT TO WHICH THIS CERTIFICATE MAY BE ISSUED OR MAY PERTAIN, THE INSURANCE AFFORDED BY THE POLICIES DESCRIBED HEREIN IS SUBJECT TO ALL THE TERMS, EXCLUSIONS AND CONDITIONS OF SUCH POLICIES. LIMITS SHOWN MAY HAVE BEEN REDUCED BY PAID CLAIMS.

INSR LTR	TYPE OF INSURANCE	ADDL INSD	SUBR WVD	POLICY NUMBER	POLICY EFF (MM/DD/YYYY)	POLICY EXP (MM/DD/YYYY)	LIMITS	
A	X **COMMERCIAL GENERAL LIABILITY** [ ] CLAIMS-MADE [X] OCCUR GEN'L AGGREGATE LIMIT APPLIES PER: [ ] POLICY [X] PRO-JECT [ ] LOC [ ] OTHER:			10072588CP	5/1/2024	5/1/2025	EACH OCCURRENCE DAMAGE TO RENTED PREMISES (Ea occurrence) MED EXP (Any one person) PERSONAL & ADV INJURY GENERAL AGGREGATE PRODUCTS - COMP/OP AGG	$ 1,000,000 $ 100,000 $ 5,000 $ 1,000,000 $ 2,000,000 $ 2,000,000
A	**AUTOMOBILE LIABILITY** X ANY AUTO [ ] OWNED AUTOS ONLY [ ] SCHEDULED AUTOS X HIRED AUTOS ONLY X NON-OWNED AUTOS ONLY			10072635CA	5/1/2024	5/1/2025	COMBINED SINGLE LIMIT (Ea accident) BODILY INJURY (Per person) BODILY INJURY (Per accident) PROPERTY DAMAGE (Per accident)	$ 1,000,000 $ $ $
	[ ] **UMBRELLA LIAB** [ ] OCCUR [ ] **EXCESS LIAB** [ ] CLAIMS-MADE [ ] DED [ ] RETENTION $						EACH OCCURRENCE AGGREGATE	$ $
	WORKERS COMPENSATION AND EMPLOYERS' LIABILITY Y / N ANYPROPRIETOR/PARTNER/EXECUTIVE OFFICER/MEMBER EXCLUDED? [ ] **(Mandatory in NH)** If yes, describe under DESCRIPTION OF OPERATIONS below	N / A					[ ] PER STATUTE [ ] OTH-ER E.L. EACH ACCIDENT E.L. DISEASE - EA EMPLOYEE E.L. DISEASE - POLICY LIMIT	 $ $ $
A	Inland Marine			10072588CP	5/1/2024	5/1/2025	Scheduled Equip. Rented/Leased Equip. Deductible	On File $250,000 $1,000

DESCRIPTION OF OPERATIONS / LOCATIONS / VEHICLES (ACORD 101, Additional Remarks Schedule, may be attached if more space is required)

The General Liability and Automobile Liability policies include a blanket automatic additional insured endorsement that provides additional insured status and General Liability and Automobile Liability policies include a blanket waiver of subrogation endorsement to the certificate holder only when there is a written contract between the named insured and the certificate holder that requires such status.

The General Liability and Automobile Liability policies have a blanket Primary & Non Contributory endorsement that affords that coverage to certificate holders only where there is a written contract between the Named Insured and the certificate holder that requires such status.

CERTIFICATE HOLDER

City of Santa Fe
200 Lincoln Avenue
Santa Fe NM 87501

CANCELLATION

SHOULD ANY OF THE ABOVE DESCRIBED POLICIES BE CANCELLED BEFORE THE EXPIRATION DATE THEREOF, NOTICE WILL BE DELIVERED IN ACCORDANCE WITH THE POLICY PROVISIONS.

AUTHORIZED REPRESENTATIVE

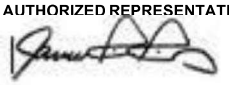

© 1988-2015 ACORD CORPORATION. All rights reserved.

City of Santa Fe

Treasury Department
200 Lincoln Ave.
Santa Fe, New Mexico 87504-0909
505-955-6551

BUSINESS REGISTRATION

Business Name: SKE Contractors, LLC

Business Location: 44 Coyote Mountain Rd RD
Santa Fe, NM 87505

CRS Number: 03-659053-00-3

Owner:

License Number: 238295

License Type: Business License - Renewable

Issued Date: September 18, 2024

Classification: Out of Jurisdiction Contractor - Genera

Expiration Date: September 18, 2025

Fees Paid: $10.00

SKE Contractors, LLC

THIS IS NOT A CONSTRUCTION PERMIT OR SIGN PERMIT. APPROPRIATE PERMITS MUST BE OBTAINED FROM THE CITY OF SANTA FE BUILDING PERMIT DIVISION PRIOR TO COMMENCEMENT OF ANY CONSTRUCTION OR THE INSTALLATION OF ANY EXTERIOR SIGN.

THIS REGISTRATION/LICENSE IS NOT TRANSFERRABLE TO OTHER BUSINESSES OR PREMISES.

TO BE POSTED IN A CONSPICUOUS PLACE

Calle Mejia ED Packet

Final Audit Report 2024-10-01

Created:	2024-09-27
By:	Kristy Miera (kamiera@santafenm.gov)
Status:	Signed
Transaction ID:	CBJCHBCAABAA4FLzxfgXREVt33wG49eVIwuxWqbDpz-4

"Calle Mejia ED Packet" History

Document created by Kristy Miera (kamiera@santafenm.gov)
2024-09-27 - 5:40:46 PM GMT- IP address: 63.232.20.2

Document emailed to Travis Dutton-Leyda (tkduttonleyda@santafenm.gov) for signature
2024-09-27 - 5:57:47 PM GMT

Email viewed by Travis Dutton-Leyda (tkduttonleyda@santafenm.gov)
2024-09-27 - 8:52:11 PM GMT- IP address: 63.232.20.2

Document e-signed by Travis Dutton-Leyda (tkduttonleyda@santafenm.gov)
Signature Date: 2024-09-27 - 9:02:59 PM GMT - Time Source: server- IP address: 63.232.20.2

Document emailed to John Dupuis (jedupuis@santafenm.gov) for signature
2024-09-27 - 9:03:01 PM GMT

Email viewed by John Dupuis (jedupuis@santafenm.gov)
2024-09-27 - 11:12:41 PM GMT- IP address: 104.47.64.254

Document e-signed by John Dupuis (jedupuis@santafenm.gov)
Signature Date: 2024-09-27 - 11:12:52 PM GMT - Time Source: server- IP address: 63.232.20.2

Document emailed to Erin McSherry (ekmcsherry@santafenm.gov) for signature
2024-09-27 - 11:12:54 PM GMT

Email viewed by Erin McSherry (ekmcsherry@santafenm.gov)
2024-09-28 - 0:00:00 AM GMT- IP address: 104.47.65.254

Document e-signed by Erin McSherry (ekmcsherry@santafenm.gov)
Signature Date: 2024-09-28 - 0:01:37 AM GMT - Time Source: server- IP address: 63.232.20.2

Document emailed to EMILY OSTER (ekoster@santafenm.gov) for signature
2024-09-28 - 0:01:39 AM GMT

Email viewed by EMILY OSTER (ekoster@santafenm.gov)

2024-10-01 - 7:01:49 PM GMT- IP address: 104.47.64.254

Document e-signed by EMILY OSTER (ekoster@santafenm.gov)

Signature Date: 2024-10-01 - 7:06:28 PM GMT - Time Source: server- IP address: 63.232.20.2

Agreement completed.

2024-10-01 - 7:06:28 PM GMT

Signature: P. Fred Heerbrandt, P.E.

Email: pfheerbrandt@ci.santa-fe.nm.us

CITY OF SANTA FE

Date: September 30, 2024

To: Mayor Alan Webber and Governing Body

Via: John Dupuis, Public Utilities Department Director JD
Mike Dozier, WWM Division Director MD

From: P. Fred Heerbrandt P.E., Engineer Supervisor, WWMD FH

Subject: Amendment #1 On-Call Repairs Price Agreement CIP 962

Vendor Name: TLC Plumbing

Vendor Number: 3291

ITEM AND ISSUE:
Public Utilities Department/Wastewater Management Division respectfully requests your review and approval of TLC General Service Contract Amendment #1 for On-Call repairs and Rehabilitation of Sewer Collection System, CIP #962. Request for the approval to increase compensation by $116,000 to the total contract amount not to exceed $657,613.77. Contract ending June 30, 2025. (P. Fred Heerbrandt, P.E., pfheerbrandt@santafenm.gov, 505-955-4623).

*Original City Clerk Item Number 21-0660
*Date of Original contract approval by Governing Body 10/18/21

Action Requested: Approval of Contract Amendment #1 and Approval of a BAR for $116,000 from the WWMD Enterprise Fund.

BACKGROUND AND SUMMARY:
The Original Contract, Item Number 21-0660, was approval by Governing Body on December 3, 2021. The contract is a 4-year contract with three contractors, which terminates on June 30, 2025. We are requesting increased compensation for TLC Plumbing, only.

PROCUREMENT METHOD:
ITB 21/46/B, Three bidders, Award to all three bidders.

Chief Procurement Officer Approval: _____ **Date:** Oct 22, 2024

Comment/Exceptions: NMSA 1978, Section 13-1-102, ITB

Supporting Information:

CONTRACT NUMBER:
The FY25 Munis contract number is 3203058

$$$$$ SOURCE/REVENUE: ☐Expense ☒Revenue

The funding source is:
Fund Name/Number: General Fund/Fund 500
Munis Org Name/Number: WW - Collection/5000362
Munis Object Name/Number: Repair and Maint Sys Equip/520150

If the project is grant funded? List grant award number: _____

Grant Manager / Accounting Officer Approval: _____ **Date:** ___
Comment/Exceptions: _____

Project Ledger #: _____

Budget Officer Approval: Andy Hopkins **Date:** Oct 22, 2024

Comment/Exceptions: _____

CAPITAL ASSET (will this procurement result in a tangible item that costs more than $5,000?):

☐Yes | ☐ No n/a

 # (if known): _____

Repair or Replacement of Existing Equipment:

☐Yes | ☒ No
If yes -> ☐Repair | ☐ Replacement

Please explain: Contract is for on-call repair or parcial replacement of collection system components.

Capital Project:
(New and improvement projects that are going to cost $10,000 or more)
☐ Yes | ☒ No

Project Ledger #: WWD2350001

Anticipated length of project: 3 years

Asset Manager Approval: _____ **Date:** _____
Comment/Exceptions: _____

Department Approvals:
IT Components: ☐ **Yes |** ☒ **No**
Vehicles: ☐ **Yes |** ☒ **No**
Facilities, Furniture, Fixtures, Equipment: ☐ **Yes |** ☒ **No**

Approval: _____ **Title:** _____ **Date**: _____
Approval: _____ **Title:** _____ **Date**: _____
Comment & Exceptions: _____

Department Contract Administrator Contact Info: P. Fred Heerbrandt, P.E., pfheerbrandt@santafenm.gov, 505-955-4623, Linda MacAllister, lmmacallister@santafenm.gov, 505-577-6731)

ATTACHMENTS:

Original Contract
Amendment #1
BAR

Item#_____
Munis Contract#3203058
Original Contract Item#21-0660
SWPA/GSA/Coop/RFP/ITB #: 21/46/B

CITY OF SANTA FE
AMENDMENT No. 1 TO
THE ON-CALL REPAIR, REPLACEMENT, EXTENSION, AND REHABILITATION OF SEWER COLLECTION SYSTEM CONTRACT
ITEM# 21-0660

This AMENDMENT No. 1 (the "Amendment") amends the CITY OF SANTA FE **ON-CALL REPAIR, REPLACEMENT, EXTENSION, AND REHABILITATION OF SEWER COLLECTION SYSTEM** CONTRACT, dated December 9, 2021 (the "Contract"), between the City of Santa Fe (the "City") and TLC Plumbing, Inc. (the "Contractor"). The date of this Amendment shall be the date when it is executed by the City and the Contractor whichever occurs last.

RECITALS:

A. Under the terms of the Contract, Contractor has agreed to provide the On-Call Repair, Replacement, Extension, And Rehabilitation of Sewer Collection System services.

B. Pursuant to Article 14 of the Contract, and for good and valuable consideration, the receipt and sufficiency of which are acknowledged by the parties, the City and the Contractor agree as follows:

2. COMPENSATION.

The amount of compensation is increased by a total of $116,000 so that Article 2, paragraph A reads in its entirety as follows:

A. The City shall pay to the Contractor in full payment for services satisfactorily performed up to a maximum of $657,613,77 total for the contract.

C. CONTRACT IN FULL FORCE.

Except as specifically provided in this Amendment, the Contract remains and shall remain in full force and effect, in accordance with its terms.

IN WITNESS WHEREOF, the parties have executed this Amendment No. 1 to the Contract as of the dates set forth below.

CITY OF SANTA FE:

_____
ALAN WEBBER, MAYOR

DATE:_____

CONTRACTOR:
TLC Plumbing, Inc

Eddie C. Padilla
Eddie C. Padilla (Sep 27, 2024 11:06 MDT)
Eddie Padilla

TITLE: President

DATE: Sep 27, 2024

CRS# 0

ATTEST:

_____
GERALYN CARDENAS, INTERIM CITY CLERK

CITY ATTORNEY'S OFFICE:

Marcos Martinez
Marcos Martinez (Sep 27, 2024 11:10 MDT)
SENIOR ASSISTANT CITY ATTORNEY

APPROVED FOR FINANCES:

Emily K. Oster
FINANCE DIRECTOR

Log # *{Finance use only}*:	
Journal # *{Finance use only}*:	

City of Santa Fe, New Mexico
BUDGET AMENDMENT RESOLUTION (BAR)

DEPARTMENT / DIVISION NAME	DATE
Public Utilities/Wastewater	9/9/2024

ITEM DESCRIPTION	ORG	OBJECT	PROJECT	INCREASE	DECREASE
EXPENDITURES				*{enter as positive #}*	*{enter as negative #}*
Rep and Maint System Equip	5000362	520150	WWD25350001	$ 116,000.00	
REVENUES				*{enter as negative #}*	*{enter as positive #}*
				$ 116,000	$ -

JUSTIFICATION: *(use additional page if needed)*
--Attach supporting documentation/memo
To increase contract #3203058 for TLC - CIP - maint and repair in the amount of $116,000 from cash to increase total contract to $657,613.77.

{Complete section below if BAR results in a net change to ANY Fund}

Fund(s) Affected	Fund Balance Increase/(Decrease)
500	(116,000)
TOTAL:	**(116,000)**

Linda Macallister
Linda Macallister (Sep 30, 2024 11:08 MDT) Sep 30, 2024
Prepared By *{print name}* Date

Sep 30, 2024
Division Director Signature *{optional}* Date

John Dupuis (Oct 2, 2024 12:10 MDT) Oct 2, 2024
Department Director Signature Date

{Use this form for Finance Committee/ City Council agenda items ONLY}

CITY COUNCIL APPROVAL

City Council Approval Date

Agenda Item #:

Andy Hopkins Oct 22, 2024
Budget Officer Date

Finance Director *{≤ $5,000}* Date

City Manager *{≤ $60,000}* Date

City of Santa Fe, New Mexico

memo

Date: October 18, 2021

To: Public Works-Public Utilities Committee / Finance Committee

From: Michael L. Dozier, Wastewater Division Director MD
Stan Holland, Wastewater Division Engineer SH

Via: Shannon W. Jones, Utility Division Director SJ

RE: Request to Award Invitation to Bid # '21/46/B for the Publicly Owned Treatment Works (POTW) On-Call Repair, Replacement, Extension and Rehabilitation of Sewer Collection System Price Agreement, CIP #962 to Sub Surface Contracting, Inc., Allied 360 Construction, LLC. and TLC Plumbing, Inc. for a total amount up to $200,000 inclusive of nmgrt.

ITEM AND ISSUE:

1) The Wastewater Division requests award of Bid Number '21/46/B for the Publicly Owned Treatment Works (POTW) On-Call Repair, Replacement, Extension and Rehabilitation of Sewer Collection System Price Agreement, CIP #962 to Sub Surface Contracting, Inc., Allied 360 Construction, LLC. and TLC Plumbing, Inc. for the remainder of Four (4) Fiscal Years, FY 2021-22 until FY2024-25. Initial funding of $200,000.00 inclusive of NMGRT is requested for FY2021-22. Future funding will depend upon budget availability.

BACKGROUND AND SUMMARY:

The Publicly Owned Treatment Works (POTW) On-Call Repair, Replacement, Extension and Rehabilitation of Sewer Collection System Price Agreement is an on-call requirements contract, with the Wastewater Division issuing work orders as needed for work such as public sewer line replacements and work within the Wastewater Treatment Plant. The contract is funded from the Wastewater Division's Collection Section (Sewer Line Maintenance) and the Wastewater Facility Operations Section. The initial Contract amount is limited to $200,000.00 inclusive of New Mexico Gross Receipt Tax (NMGRT).

This was a multi-contractor award Invitation to Bid (ITB) to set the applicable Bid Items for future work. The ITB was only used to select the winning Contractors. Future work will be assigned under fully signed Work Orders for planned work or will be followed with a signed Work Order for Emergency repairs. The exact type of work required will be used to select from the applicable Bid Items. Not every Bit Item is anticipated to be used.

The initial contract period is Fiscal Years 2021-2025. The bids for this project were opened on June 24, 2021 and were subsequently evaluated for completeness and accuracy. The base bids are $163,971.00 and $166,293.00 for Allied 360 Construction. and Sub Surface Contracting respectively and were very similar in pricing for certain types of work. TLC was the highest bidder at $244,863.15.

Sub Surface Contracting has had the current On-Call Contract with the Wastewater Division for the past four years.

The Wastewater Division has verified with Los Alamos County that Allied 360 Construction has satisfactorily completed some of the type work outlined in the Bid.

TLC Inc. had the on-call contract with the Wastewater Division in the past prior to Sub Surface. TLC is also lower in pricing for some specialty work items like pipe bursting, trenchless spot repairs and major sewer line replacements and they have a larger work force to call upon.

For these reasons, it was decided to award and utilize all three (3) Contractors

A summary of the bids is provided below:

Bidders	Total Bid without NMGRT
Allied 360 Construction	$163.971.00
Sub Surface Contracting, Inc.	$166,293.00
TLC Plumbing & Utility	$244,863.15

CONTRACT NUMBER:
The FY22 Munis contract number:
Sub Surface Contracting # 3203056
Allied 360 # 3203057
TLC # 3203058

FUNDING SOURCE:
The funding source is:
Waste Water Operating Collections and Operations
FY 2022
Fund Name/Number: Waste Water Enterprise Fund/ 505
Munis Org Name/Number: Operations 5000367; Collections 5000362
Munis Object Name/Number: Repair & Maint. System Equip. / 520150

Funds for this work are available in Business Unit, Line Item 5000362-520150 (Collections) in the amount of $150,000.00 including NMGRT and Business Unit, Line Item 5000367-520150 (Operations) in the amount of $50,000.00

RECOMMENDATION:

The Wastewater Division recommends:

- Review and approval of award of contracts to Sub Surface Contracting, Inc., Allied 360 Construction and TLC Plumbing & Utility for Bid # '21/46/B for the FY 21/22 Publicly Owned

Treatment Works (POTW) On-Call Repair, Replacement, Extension and Rehabilitation of Sewer Collection System Price Agreement, CIP #962 for a total amount of $200,000.00 inclusive of NMGRT for FY2021-22.

- Forwarding and recommendation of approval of award and contract to the Finance Committee for their consideration and approval and to the Governing Body for their final consideration and approval.

(Rev. 4/20)

City of Santa Fe
Central Purchasing Office

Price Agreement

Awarded Contractor(s): 1) Allied 360 Construction, LLC. 2) Sub Surface Contracting, Inc. 3) TLC Plumbing, Inc. *(see page 15 for contact info)*	**Price Agreement Number:** **Payment Terms: Net 30**
Ship To: **All City of Santa Fe Departments and Political Subdivisions allowed by Law**	**F.O.B.: Destination**
Invoice To: **City of Santa Fe** **Accounts Payable** **PO Box 909** **Santa Fe, NM 87504-0909**	**Term: July 1, 2021 to June 30, 2025** **Delivery: As requested by Department**

Title: Publicly Owned Treatment Works (POTW) On-Call Repair, Replacement, Extension and Rehabilitation of Sewer Collection System Price Agreement CIP #962

This Price Agreement is to be awarded pursuant to the respective Invitation to Bid (ITB) 21/46/B and shall become a part thereof.

This Price Agreement is made subject to the "terms and conditions" as indicated on subsequent price agreement articles and construction contract pages.

Instructions to Supplier:

- By commencing under this Price Agreement (Agreement), the Contractor agrees to all terms and conditions within and attached and agrees that if there is a conflict with the Contractors terms, the City of Santa Fe's terms and conditions shall govern. In cases of discrepancy between the work order, purchase order and this Agreement, the terms and conditions of this Agreement shall prevail.
- Do not fill orders for goods/services not listed in this Agreement.
- Orders against this Agreement must be placed with as a separate contract work order with a purchase order.
- Do not fill orders without a valid quote, purchase order work order.
- The purchase order release number must be on all invoices.
- The City of Santa Fe (City) will not be liable for purchases made by unauthorized individuals.

Please forward all original invoice(s) to the Accounts Payable Department at PO Box 909, Santa Fe, NM 87504-0909

Instructions to Requesting Department:

- Do not place orders for goods/services not listed in the Procurement Contract.
- To place an order against this Procurement Contract, issue a Purchase Order Release before placing the order with the Supplier.

This Price Agreement is made subject to the "terms and conditions" as indicated on subsequent pages.

Terms and Conditions

General: When the City or the Requesting Department issues a contract or a purchase order release, a binding contract is created.

Variation in Quantity: No variation in the quantity of any item called for by this order will be accepted unless such variation has been caused by conditions of loading, shipping, packing or allowances in manufacturing process and then only to the extent, if any, specified in this order.

Assignment:

a. Neither the order, nor any interest therein, nor any claim thereunder, shall be assigned or transferred by the Contractor, except as set forth in Subparagraph 3b or as expressly authorized in writing by the Chief Procurement Officer or his/her designee. No such assignment or transfer shall relieve the Contractor from the obligations and liabilities under this order.

b. Contractor agrees that any and all claims for overcharge resulting from antitrust violations which are borne by the City as to goods, services, and materials purchased in connection with this agreement are hereby assigned to the City.

City Furnished Property: City furnished property shall be returned to the City upon request in the same condition as received except for ordinary wear, tear and modifications ordered hereunder.

Inspection: Final inspection and acceptance will be made at the destination. Supplies rejected at the destination for nonconformance with specifications shall be removed at the Contractor's risk and expense, promptly after notice of rejection.

Inspection of Plant: The Chief Procurement Officer or his/her designee may inspect, at any reasonable time, the part of the Contractor's, or any subcontractor's plant or place of business, which is related to the performance of this contract.

Commercial Warranty: The Contractor agrees that the supplies or services furnished under this order shall be covered by the most favorable commercial warranties the Contractor gives for such to any customer for such supplies or services. The rights and remedies provided herein shall extend to the City and are in addition to and do not limit any rights afforded to the City by any other clause of this order. **Contractor agrees not to disclaim warranties of fitness for a particular purpose of merchantability.**

Taxes: The unit price shall exclude all state taxes.

Default: The City reserves the right to cancel all or any part of this order without cost to the City, if the Contractor fails to meet the provisions of this order and, except as otherwise provided herein, to hold the Contractor liable for any excess cost occasioned by the City due to the Contractor's default. The Contractor shall not be liable for any excess costs if failure to perform the order arises out of causes beyond the control and without the fault or negligence of the Contractor, such causes include but are not restricted to, acts of God or the public enemy, acts of the State or Federal Government, fires, floods, epidemics, quarantine restrictions, strikes, freight embargoes, unusually severe weather and defaults of subcontractors due to any of the above, unless the City shall determine that the supplies or services to be furnished by the subcontractor were obtainable from other sources in sufficient time to permit the Contractor to meet the required delivery scheduled. The rights of

the City provided in this paragraph shall not be exclusive and are in addition to any other rights now being provided by law or under this order.

Non-Collusion: In signing this bid the Contractor certifies he/she has not, either directly or indirectly, entered into action in restraint of free competitive bidding in connection with this offer submitted to the Chief Procurement Officer or his/her designee.

Nondiscrimination: Contractor doing business with the City must be in compliance with the Federal Civil Rights Act of 1964 and Title VII of the Act (Rev. 1979) and the Americans with Disabilities Act of 1990 (Public Law 101-336).

The Procurement Code: Sections 13-1-28 through 13-1-199 NMSA 1978, imposes civil and criminal penalties for its violation. In addition the New Mexico criminal statutes impose felony penalties for bribes, gratuities and kickbacks.

Items: All bid items are to be NEW and of most current production, unless otherwise specified.

Payment for Purchases: Except as otherwise agreed to: late payment charges may be assessed against the Requesting Department in the amount and under the conditions set forth in Section 13-1-158 NMSA 1978.

Workers' Compensation: The Contractor agrees to comply with state laws and rules pertaining to Workers' Compensation benefits for its employees. If the Contractor fails to comply with Workers' Compensation Act and applicable rules when required to do so, this Agreement may be terminated by the contracting agency.

Contractor Personnel: Personnel proposed in the Contractor's written bid to the Procuring Agency are considered material to any work performed under this Price Agreement. Once a Purchase Order or contract has been executed, no changes of personnel will be made by the Contractor without prior written consent of the Requesting Department. Replacement of any Contractor personnel, if approved, shall be with personnel of equal ability, experience, and qualifications. The Contractor will be responsible for any expenses incurred in familiarizing the replacement personnel to insure their being productive to the project immediately upon receiving assignments. Approval of replacement personnel shall not be unreasonably withheld. The Requesting Department shall retain the right to request the removal of any of the Contractor's personnel at any time.

Subcontracting: The Contractor shall not subcontract any portion of the Price Agreement without the prior written approval of the Requesting Department. No such subcontracting shall relieve the Contractor from its obligations and liabilities under this Price Agreement, nor shall any subcontracting obligate payment from the City.

Records and Audit: The Contractor shall maintain detailed time and expenditure records that indicate the date, time, nature, and cost of services rendered during this Price Agreement's term and effect, and retain them for a period of three (3) years from the date of final payment under this Price Agreement. The records shall be subject to inspection by the City. The City shall have the right to audit billings, both before and after payment. Payment for services under this Price Agreement shall not foreclose the right of the City to recover excessive or illegal payments.

Subcontracts: The foregoing requirements for Contractor Personnel, Subcontracting, and Audit shall be inserted into all subcontracts from the prime contractor to the subcontractor.

ARTICLES

Article I – Statement of Work
Under the terms and conditions of this Price Agreement all commissions, institutions, political subdivisions and local public bodies allowed by law may issue orders for items and/or services described herein. The terms and conditions of this Price Agreement shall form a part of each order issued hereunder.

The items and/or services to be ordered shall be as listed under Article X - Price Schedule. All orders issued hereunder will bear both an order number and this Price Agreement number. It is understood that no guarantee or warranty is made or implied by the City's Chief Procurement Officer, his/her designee or the Requesting Department that any order for any definite quantity will be issued under this Price Agreement. The Contractor is required to accept the order and furnish the items and/or services in accordance with the articles contained hereunder for the quantity of each order.

Article II – Term
The term of this Price Agreement, for issuance of orders, shall be as indicated in the specifications.

Article III – Specifications
Items and/or services furnished hereunder shall conform to the requirements of specifications and/or drawings applicable to items listed under Article X-Price Schedule. Orders issued against this schedule will show the applicable Price Agreement item(s), number(s), and price(s); however they may not describe the item(s) fully.

Article IV – Shipping and Billing Instructions
Delivery shall be as called for by the Requesting Department. Shipment shall be made only against specific orders which the Requesting Department may place with the Contractor during the term. Contractor shall ship in accordance with the following instructions:

a. The Contractor shall enclose a packing list with each shipment listing the City's purchasing document number and the Contractor's name, Requesting Department's contact name and location shall be shown on each packing and delivery ticket, package, bill of lading, the commercial parts number (if any) for each item and other correspondence in connection with the shipments. The Requesting Department's count will be accepted by the Contractor as final and conclusive on all shipments not accompanied by a packing ticket.

b. The Contractor's invoice shall be submitted duly certified and shall contain the following information: order number, description of supplies or services, quantities, unit price and extended totals. Separate invoices shall be rendered for each and every complete shipment.

c. Invoices must be submitted to the City's **Accounts Payable** and NOT the Central Purchasing Office.

If Contractor is unable to meet stated delivery the City's Chief Procurement Officer or his/her designee must be notified.

Article V – Termination
The City may terminate this Agreement for convenience or cause. The Contractor may only terminate this Agreement based upon the City's uncured, material breach of this Agreement. Contractor shall give the City written notice of termination at least thirty (30) days prior to the intended date of termination, which notice shall (i) identify all the City's material breaches of this Agreement upon which the termination is based and (ii) state what the City must do to cure such material breaches. Contractor's notice of termination shall only be effective (i) if the City does not cure all material breaches within the thirty (30) day notice period or (ii) in the case of material breaches that cannot be cured within thirty (30) days, the City does not, within the thirty (30) day notice period, notify the Contractor of its intent to cure and begin with due diligence to cure the material breach.

Termination of this Contract, however, shall not affect any outstanding orders. This provision is not exclusive and shall not waive other rights and remedies afforded either party in the event of breach of contract or default. In such instances the contract may be cancelled effective immediately.

Article VI – Amendment
This Price Agreement may be amended by mutual agreement of the City's Chief procurement Officer or his/her designee and the Contractor upon written notice by either party to the other. An amendment to this Price Agreement shall not affect any outstanding orders issued prior to the effective date of the amendment as mutually agreed upon, and as published by the City's Chief procurement Officer or his/her designee. Amendments affecting price adjustments and/or the extension of a price agreement expiration date are not allowed unless specifically provided in the bid and price agreement specifications.

Article VII – Indemnity Clause
Contractor shall indemnify and hold harmless the City, its officers and employees, against liability, claims, damages, losses or expenses arising out of bodily injury to persons or damage to properties caused by, or resulting from Contractor's, and/or its employees, own negligent act or omission while Contractor, and/or its employees, perform or fails to perform its obligations and duties under the Terms and Conditions of this agreement. This hold harmless and indemnification clause is subject to the immunities, provisions, and limitations of the Tort Claims Act (Section 41-4-1, et seq., N.M.S.A. 1978 comp. and Section 57-7-1 N.M.S.A. 1878 comp. and any amendments thereto.

It is specifically agreed between the parties executing this agreement that it is not intended by any of the provisions of any part of the agreement to create in the public or any member thereof a third party beneficiary or to authorize anyone not a party to the agreement to maintain a suit(s) for wrongful death(s), bodily and/ or personal injury(s) to person(s), damage(s) to property(ies) and/or any other claim(s) whatsoever pursuant to the provisions of this agreement.

Contractor shall provide all insurance necessary to employees on the work site, including but not limited to Worker's Compensation.

Article VIII – Issuance or Work Orders
Only written signed Work Orders are valid under this Price Agreement.

Article IX – Packing (if applicable)
Packing shall be in conformance with standard commercial practices.

Article X – Price Schedule
Prices as listed in the item(s) price schedule hereto attached are firm.

Article XI – Wage Rates
Pursuant to the requirements of any Contract entered into that will have a Work Order (WO) in excess of sixty thousand dollars ($60,000) for construction is subject to the minimum wage rate determination issued by the New Mexico Department of Work Force Solutions for this project/WO.

Item# 21-0660
Munis Contract# 3203058

CITY OF SANTA FE

CAPITAL IMPROVEMENTS PROGRAM

AGREEMENT BETWEEN
CITY AND CONTRACTOR

PUBLICLY OWNED TREATMENT WORKS (POTW) ON-CALL REPAIR, REPLACEMENT, EXTENSION AND REHABILITATION OF SEWER COLLECTION SYSTEM PRICE AGREEMENT CIP #962

THIS AGREEMENT is made and entered into by and between the **CITY OF SANTA FE, NEW MEXICO**,hereinafter referred to as the "City," and **ALLIED 360 CONSTRUCTION, LLC., SUB SURFACE CONTRACTING, INC. AND TLC PLUMBING, INC.**, hereinafter referred to as the "Contractor(s)" and is effective as of the date set forth below upon which it is executed by the Parties.

IT IS AGREED BETWEEN THE PARTIES:

1. **Scope of Work.**
   A. The Contractor shall perform the following work:

      1) The City of Santa Fe Public Utilities Department Publicly Owned Treatment Works (POTW) On-call repair, replacement, extension and rehabilitation of sewer collection system Price Agreement and work related to those systems. This procurement will be based on a vendor supplying pricing through an established cost schedule (attached). The price agreement will contain the contractor's commitment to offer services and willingness to respond 'on-call 'to the requests when such requests are originated and authorized by the City of Santa Fe.

      The work under this contract is located in the City of Santa Fe at various sites throughout the City. The scope of work consists of furnishing all mobilization, labor, material, equipment and services, unless otherwise specified, for on-call emergency service and for routine work for the City of Santa Fe Sanitary Sewer Treatment Facility and Sanitary Sewer Collection System and appurtenances. Work to include repair, replacement, extension and rehabilitation of the sewer collection system to include trenching, excavation, backfill and compaction at excavation site, cleaning of loose debris, soil density testing, and any other incidental items necessary for the safety, health and welfare of the general public and to complete Work authorized under a Work Oder and in accordance with the drawings, specifications, and other Contract Documents.

   B. The Work to install fully functioning, warrantied sewer lines and manholes and other work issued by a Work Order includes, but is not limited to the following:

      1. Installation of all specified sewer lines, sewer manholes and service connections, etc.
      2. Earthwork, grading and compaction for the restoring the driving surface over disturbed

areas.

3. Coordination with Public Service Company of New Mexico (PNM) as required
4. Coordination with the New Mexico Gas Company as required
5. Coordination with Century Link as required
6. Coordination with New Mexico NM811 and/or contracting with utility location providers as required.
7. Coordination with the City's Wastewater Division for periodic review of system installations.
8. Any other related work associated with this work, as drawn and specified in the WO.
9. Provide all required materials testing.
10. Provide 12 month Contractor's warranty on installed sewer collection systems, parts and labor.
11. Provide Manufacturer's warranties on miscellaneous parts and labor.

C. The Contractor shall be responsible for adherence to the Contract Documents, Work Orders, Specifications and approved directives and Change Orders:

- The Contractor shall be responsible for State CID requirements and permit.
- The Contractor shall be responsible for verifications
- of all existing conditions, measurements and dimensions before signing each WO.
- The Contractor shall be responsible for all permits, fees, and State and/or City inspections associated with the construction.

D. The Contractor shall perform all the work required by the Wastewater Management Division, as required, on each Work Order (WO) in the Contract Documents (attached) for the City of Santa Fe Public Utilities Department Publicly Owned Treatment Works (POTW) On-call Repair, Replacement, Extension and Rehabilitation of Sewer Collection System Price Agreement.

E. The Contractor shall be responsible for verifications of all measurements and dimensions for bidding on each subsequent Work Order.

F. The Contractor shall provide and keep at the work site, a complete "as-built" record set of drawings that shall be corrected daily and shall show every change from the original approved drawings and specifications. These changes shall be forwarded to City periodically. The drawings shall reflect exact and actual "as-built" conditions of construction, installation, and erection as it progresses. Where drawings are not adequate to show "as-built" conditions, Contractor shall prepare sketches which delineate the necessary "as-built" information. City shall furnish two (2) sets of all paper "blue-line" print "approved" drawings for use in accomplishing specified mark-up. Final "as-built" drawings shall be delivered to City by Contractor upon completion of the work.

G. The Contractor shall be responsible for maintaining traffic control at the site in conformance with the Manual on Uniform Traffic Control Devices.

H. The Contractor shall be responsible for all permits, fees, and State and City inspections associated with the construction.

I. Incorporation by Reference. All exhibits, addenda, schedules of ITB 21/46/B attached hereto and all certificates, work order documents, drawings, as-builts and other instruments contemplated to be delivered hereunder are hereby expressly made a part of this Agreement as fully as thoughset forth herein, and all references to this Agreement herein or in any of such writings shall be deemed to refer to and include all of such writings. This Agreement contains the entire agreement between the parties with respect to the subject matter hereof and supersedes all prior agreements and understandings, both written and oral, among the parties with respect to the subject matter hereof. If there is any conflict between such exhibits or addenda and the terms of this Agreement, such exhibits or addenda shall control.

2. **Compensation.**

A. The City shall pay to the Contractor in full payment for services satisfactorily performed BASED UPON THE ATTACHED PRICE SHEETS, DELIVERABLES, MILESTONES, AND COMPLETED WORK ORDERS (WO) including gross receipts tax.

The applicable gross receipts taxes or local option taxes shall be shown as a separate amount on each billing or request for payment made under the contract.

The parties do not intend for the Contractor to continue to provide services without compensation when the total compensation amount is reached. In no event will the Contractor be paid for services provided in excess of the total compensation amount without this Agreement being amended in writing prior to those services in excess of the total compensation amount being provided.

B. Payment is subject to availability of funds pursuant to the Appropriations Paragraph set forth below and to any negotiations between the parties from year to year pursuant to Paragraph 1, Scope of Work, and to approval by the City. All invoices MUST BE received by the City no later than thirty 30) days after the termination of the Fiscal Year in which the services were delivered. Invoices received after such date WILL NOT BE PAID.

C. Payment in future fiscal years is subject to availability of funds pursuant to the Appropriations Paragraph set forth below and to any negotiations between the parties from year to year pursuant to Paragraph 1, Scope of Work, and to approval by the City. All invoices MUST BE receivedby the City no later than fifteen (15) days after the termination of the Fiscal Year in which the services were delivered. Invoices received after such date WILL NOT BE PAID.)

E. The Contractor must submit a detailed statement accounting for all services performed and expenses incurred. If the City finds that the services are not acceptable, within thirty days after thedate of receipt of written notice from the Contractor that payment is requested, it shall provide the Contractor a letter of exception explaining the defect or objection to the services, and outlining steps theContractor may take to provide remedial action. Upon certification by the City that the services have been received and accepted, payment shall be tendered to the Contractor within thirty days after the dateof acceptance. If payment is made by mail, the payment shall be deemed tendered on the date it is postmarked. However, the City shall not incur late charges, interest, or penalties for failure to make payment within the time specified herein.

3. **Term.**

THIS AGREEMENT SHALL NOT BECOME EFFECTIVE UNTIL APPROVED BY THE CITY. This Agreement shall terminate on **June 30, 2025** unless terminated pursuant to paragraph 4 (Termination), or paragraph 5 (Appropriations). In accordance with Section 13-1-150 NMSA 1978, no contract term for a professional services contract, including extensions and renewals, shall exceed four years, except as set forth in Section 13-1-150 NMSA 1978.

4. **Termination.**

A. Termination. This Agreement may be terminated by either of the parties hereto upon written notice delivered to the other party at least thirty (30) days prior to the intended date of termination. Except as otherwise allowed or provided under this Agreement, the City's sole liability upon such termination shall be to pay for acceptable work performed prior to the Contractor's receipt of the notice of termination, if the City is the terminating party, or the Contractor's sending of the notice of termination, if the Contractor is the terminating party; provided, however, that a notice of termination shall not nullify or otherwise affect either party's liability for pre-termination defaults under or breaches of this Agreement. The Contractor shall submit an invoice for such work within thirty (30) days of receiving or sending the notice of termination. Notwithstanding the foregoing, this Agreement may be terminated immediately upon written notice to the Contractor if the Contractor becomes unable to perform the services contracted for, as determined by the City or if, during the term of this Agreement, the Contractor or any of its officers, employees or agents is indicted for fraud, embezzlement or other crime due to misuse of City funds or due to the Appropriations paragraph herein. *THIS PROVISION IS NOT EXCLUSIVE AND DOES NOT WAIVE THE City's OTHER LEGAL RIGHTS AND REMEDIES CAUSED BY THE CONTRACTOR'S DEFAULT/BREACH OF THIS AGREEMENT.*

B. Termination Management. Immediately upon receipt by either the City or the Contractor of notice of termination of this Agreement, the Contractor shall: 1) not incur any further obligations for salaries, services or any other expenditure of funds under this Agreement without written approval of the City; 2) comply with all directives issued by the City in the notice of termination as to the performance of work under this Agreement; and 3) take such action as the City shall direct for the protection, preservation, retention or transfer of all property titled to the City and records generated under this Agreement. Any non-expendable personal property or equipment provided to or purchased by the Contractor with contract funds shall become property of the City upon termination and shall be submitted to the City as soon as practicable.

5. **Appropriations.**

The terms of this Agreement are contingent upon sufficient appropriations and authorization being made by the City Council for the performance of this Agreement. If sufficient appropriations and authorization are not made by the City Council, this Agreement shall terminate immediately upon written notice being given by the City to the Contractor. The City's decision as to whether sufficient appropriations are available shall be accepted by the Contractor and shall be final. If the City proposes an amendment to the Agreement to unilaterally reduce funding, the Contractor shall have the option to terminate the Agreement or to agree to the reduced funding, within thirty (30) days of receipt of the proposed amendment.

6. **Status of Contractor.**

The Contractor and its agents and employees are independent contractors performing professional services for the City and are not employees of the City. The Contractor and its agents and

employees shall not accrue leave, retirement, insurance, bonding, use of City vehicles, or any other benefits afforded to employees of the City as a result of this Agreement. The Contractor acknowledges that all sums received hereunder are reportable by the Contractor for tax purposes, including without limitation, self-employment and business income tax. The Contractor agrees not to purport to bind the City unless the Contractor has express written authority to do so, and then only within the strict limits of that authority.

7. **Construction Contract Performance and Payment Bond.**

A. When a construction contract is awarded in excess of twenty-five thousand dollars ($25,000), the following bonds or security shall be delivered to the City and shall become binding on the parties upon the execution of the contract. If the Contractor fails to deliver the required performance and payment bonds, the Contractor's bid shall be rejected, its bid security shall be enforced to the extent of actual damages. Award of the contract shall be made pursuant to the Procurement Code in the following manner:

1) a performance bond satisfactory to the City, executed by a surety company authorized to do business in this state and said surety to be approved in federal circular 570 as published by the United States treasury department or the state board of finance or the local governing authority, in an amount equal to one hundred percent of the price specified in the contract; and

2) a payment bond satisfactory to the City, executed by a surety company authorized to do business in this state and said surety to be approved in federal circular 570 as published by the United States treasury department or the state board of finance or the local governing authority, in an amount equal to one hundred percent of the price specified in the contract, for the protection of all persons supplying labor and material to the contractor or its subcontractors for the performance of the work provided for in the contract.

B. A subcontractor shall provide a performance and payment bond on a public works building project if the subcontractor's contract for work to be performed on a project is one hundred twenty-five thousand dollars ($125,000) or more.

8. **Assignment.**

The Contractor shall not assign or transfer any interest in this Agreement or assign any claims for money due or to become due under this Agreement without the prior written approval of the City.

9. **Subcontracting.**

The Contractor shall not subcontract any portion of the services to be performed under this Agreement without the prior written approval of the City. No such subcontract shall relieve the primary Contractor from its obligations and liabilities under this Agreement, nor shall any subcontract obligate direct payment from the City.

10. **Release.**

Final payment of the amounts due under this Agreement shall operate as a release of the City, its officers and employees from all liabilities, claims and obligations whatsoever arising from or under this Agreement.

11. Confidentiality.

Any confidential information provided to or developed by the Contractor in the performance of this Agreement shall be kept confidential and shall not be made available to any individual or organization by the Contractor without the prior written approval of the City.

12. Product of Service -- Copyright.

All materials developed or acquired by the Contractor under this Agreement shall become the property of the City and shall be delivered to the City no later than the termination date of this Agreement. Nothing developed or produced, in whole or in part, by the Contractor under this Agreement shall be the subject of an application for copyright or other claim of ownership by or on behalf of the Contractor.

13. Conflict of Interest; Governmental Conduct Act.

A. The Contractor represents and warrants that it presently has no interest and, during the term of this Agreement, shall not acquire any interest, direct or indirect, which would conflict in any manner or degree with the performance or services required under the Agreement.

B. The Contractor further represents and warrants that it has complied with, and, during the term of this Agreement, will continue to comply with, and that this Agreement complies with all applicable provisions of the Governmental Conduct Act, Chapter 10, Article 16 NMSA 1978.

C. Contractor's representations and warranties in Paragraphs A and B of this Article 12 are material representations of fact upon which the City relied when this Agreement was entered into by the parties. Contractor shall provide immediate written notice to the City if, at any time during the term of this Agreement, Contractor learns that Contractor's representations and warranties in Paragraphs A and B of this Article 12 were erroneous on the effective date of this Agreement or have become erroneous by reason of new or changed circumstances. If it is later determined that Contractor's representations and warranties in Paragraphs A and B of this Article 12 were erroneous on the effective date of this Agreement or have become erroneous by reason of new or changed circumstances, in addition to other remedies available to the City and notwithstanding anything in the Agreement to the contrary, the City may immediately terminate the Agreement.

D. All terms defined in the Governmental Conduct Act have the same meaning in this section.

14. Amendment.

A. This Agreement shall not be altered, changed or amended except by instrument in writing executed by the parties hereto and all other required signatories.

B. If the City proposes an amendment to the Agreement to unilaterally reduce funding due to budget or other considerations, the Contractor shall, within thirty (30) days of receipt of the proposed Amendment, have the option to terminate the Agreement, pursuant to the termination provisions as set forth in Article 4 herein, or to agree to the reduced funding.

15. Change Orders.

Changes. The Contractor may only make changes or revisions within the Scope of Work as defined by

Article 1 and/or Exhibit 1 after receipt of written approval by the City Manager or his/her designee. Such change may only be made to Tasks or Sub-Task as defined in the Scope of Work. Under no circumstance shall such change affect the:

1. Deliverable requirements, as outlined in the Scope of Work;
2. Due date of any Deliverable, as outlined in the Scope of Work;
3. Compensation of any Deliverable, as outlined in the Scope of Work;
4. Agreement compensation, as outlined in Article 2; or
5. Agreement termination, as outlined in Article 4.

Change Request Process. In the event that circumstances warrant a change to accomplish the Scope of Work as described above, a Change Request shall be submitted that meets the following criteria:

The Project Manager shall draft a written Change Request for review and approval by the City Manager to include:

1. the name of the person requesting the change;
2. a summary of the required change;
3. the start date for the change;
4. the reason and necessity for change;
5. the elements to be altered; and
6. the impact of the change.

The City Manager shall provide a written decision on the Change Request to the Contractor within a maximum of ten (10) Business Days of receipt of the Change Request. All decisions made by the City Manager are final. Change Requests, once approved, become a part of the Agreement and become binding as a part of the original Agreement.

16. Merger.

This Agreement incorporates all the Agreements, covenants and understandings between the parties hereto concerning the subject matter hereof, and all such covenants, Agreements and understandings have been merged into this written Agreement. No prior Agreement or understanding, oral or otherwise, of the parties or their agents shall be valid or enforceable unless embodied in this Agreement.

17. Entire Agreement.

This Agreement, together with any other documents incorporated herein by reference and all related Exhibits and Schedules constitutes the sole and entire agreement of the Parties with respect to the subject matter of this Agreement, and supersedes all prior and contemporaneous understandings, agreements, representations, and warranties, both written and oral, with respect to the subject matter. In the event of any inconsistency between the statements in the body of this Agreement, and the related Exhibits and Schedules, the statements in the body of this Agreement shall control.

18. Penalties for violation of law.

The Procurement Code, Sections 13-1-28 through 13-1-199, NMSA 1978, imposes civil and criminal penalties for its violation. In addition, the New Mexico criminal statutes impose felony penalties for illegal bribes, gratuities and kickbacks.

19. Equal Opportunity Compliance.

The Contractor agrees to abide by all federal and state laws and rules and regulations, and Santa Fe City Code, pertaining to equal employment opportunity. In accordance with all such laws of the State of New Mexico, the Contractor assures that no person in the United States shall, on the grounds of race, religion, color, national origin, ancestry, sex, age, physical or mental handicap, or serious medical condition, spousal affiliation, sexual orientation or gender identity, be excluded from employment with or participation in, be denied the benefits of, or be otherwise subjected to discrimination under any program or activity performed under this Agreement. If Contractor is found not to be in compliance with these requirements during the life of this Agreement, Contractor agrees to take appropriate steps tocorrect these deficiencies.

20. Applicable Law.

The laws of the State of New Mexico shall govern this Agreement, without giving effect to its choice of law provisions. Venue shall be proper only in a New Mexico court of competent jurisdiction in accordance with Section 38-3-1 (G) NMSA 1978. By execution of this Agreement, Contractor acknowledges and agrees to the jurisdiction of the courts of the State of New Mexico over any and all lawsuits arising under or out of any term of this Agreement.

21. Workers Compensation.

The Contractor agrees to comply with state laws and rules applicable to workers compensation benefits for its employees. If the Contractor fails to comply with the Workers Compensation Act and applicable rules when required to do so, this Agreement may be terminated by the City.

22. Professional Liability Insurance.

Contractor shall maintain professional liability insurance throughout the term of this Agreement providing a minimum coverage in the amount required under the New Mexico Tort Claims Act. The Contractor shall furnish the City with proof of insurance of Contractor's compliance with the provisions of this section as a condition prior to performing services under this Agreement.

23. Other Insurance

If the services contemplated under this Agreement will be performed on or in City facilities or property, Contractor shall maintain in force during the entire term of this Agreement, the following insurance coverage(s), naming the City as additional insured.

A. **Commercial General Liability** insurance shall be written on an occurrence basis and be a broad as ISO Form CG 00 01 with limits not less than $2,000,000 per occurrence and $2,000,000 in the aggregate for claims against bodily injury, personal and advertising injury, and property damage. Said policy shall include broad form Contractual Liability coverage and be endorsed to name the City of Santa Fe their officials, officers, employees, and agents as additional insureds.

B. **Business Automobile Liability** insurance for all owned, non-ownedautomobiles, with a combined single limit not less than $1,000,000 per accident.

C. **Broader Coverage and Limits.** The insurance requirements under this Agreement shall be the greater of (1) the minimum coverage and limits specified in this Agreement, or (2) the broader coverage and maximum limits of coverage of any insurance policy

or proceeds available to the Named Insured. It is agreed that these insurance requirements shall not in any way act to reduce coverage that is broader or that includes higher limits than the minimums required herein. No representation is made that the minimum insurance requirements of this Agreement are sufficient to cover the obligations of Contractor hereunder.

D. Contractor shall maintain the above insurance for the term of this Agreement and name the City as an additional insured and provide for 30 days cancellation notice on any Certificate of Insurance form furnished by Contractor. Such certificate shall also specifically state the coverage provided under the policy is primary over any other valid and collectible insurance and provide a waiver of subrogation.

24. Records and Financial Audit.

The Contractor shall maintain detailed time and expenditure records that indicate the date; time, nature and cost of services rendered during the Agreement's term and effect and retain them for a period of three (3) years from the date of final payment under this Agreement. The records shall be subject to inspection by the City. The City shall have the right to audit billings both before and after payment. Payment under this Agreement shall not foreclose the right of the City to recover excessive or illegal payments

25. Indemnification.

The Contractor shall defend, indemnify and hold harmless the City from all actions, proceeding, claims, demands, costs, damages, attorneys' fees and all other liabilities and expenses of any kind from any source which may arise out of the performance of this Agreement, caused by the negligent act or failure to act of the Contractor, its officers, employees, servants, subcontractors or agents, or if caused by the actions of any client of the Contractor resulting in injury or damage to persons or property during the time when the Contractor or any officer, agent, employee, servant or subcontractor thereof has or is performing services pursuant to this Agreement. In the event that any action, suit or proceeding related to the services performed by the Contractor or any officer, agent, employee, servant or subcontractor under this Agreement is brought against the Contractor, the Contractor shall, as soon as practicable but no later than two (2) days after it receives notice thereof, notify the legal counsel of the City.

26. New Mexico Tort Claims Act

Any liability incurred by the City of Santa Fe in connection with this Agreement is subject to the immunities and limitations of the New Mexico Tort Claims Act, Section 41-4-1, et. seq. NMSA 1978, as amended. The City and its "public employees" as defined in the New Mexico Tort Claims Act, do not waive sovereign immunity, do not waive any defense and do not waive any limitation of liability pursuant to law. No provision in this Agreement modifies or waives any provision of the New Mexico Tort Claims Act.

27. Invalid Term or Condition.

If any term or condition of this Agreement shall be held invalid or unenforceable, the remainder of this Agreement shall not be affected and shall be valid and enforceable.

28. Enforcement of Agreement.

A party's failure to require strict performance of any provision of this Agreement shall not waive or diminish that party's right thereafter to demand strict compliance with that or any other provision. No waiver by a party of any of its rights under this Agreement shall be effective unless express and in writing, and no effective waiver by a party of any of its rights shall be effective to waive any other rights.

29. Notices.

Any notice required to be given to either party by this Agreement shall be in writing and shall be delivered in person, by courier service or by U.S. mail, either first class or certified, return receipt requested, postage prepaid, as follows:

To the City:
City of Santa Fe
Wastewater Management Division
73 Paseo Real
Santa Fe, New Mexico 87507
(505) 955-4650

To the Contractor(s):

1) Allied 360 Construction, LLC
Contact: Patrick Herrera, Managing Member/Owner
P.O. Box 1913
Espanola, NM 87532
Ph: (505) 470-5779
Email: patrickherrera@ymail.com

2) Sub-Surface Contracting, Inc.
Contact: Neal J. Keiper / Owner-President
27 Paseo de River
Santa Fe, NM 87507
Ph: (505) 473-1000
Email:

3) TLC Plumbing, Inc.
Contact: Eddie Padilla, Chief Dev. Officer
5000 Edith Blvd. NE
Albuquerque, NM 87107
Ph: (505) 761-9696
Email:

30. Authority.

If Contractor is other than a natural person, the individual(s) signing this Agreement on behalf of Contractor represents and warrants that he or she has the power and authority to bind Contractor, and that no further action, resolution, or approval from Contractor is necessary to enter into a binding contract.

IN WITNESS WHEREOF, the Parties have executed this Agreement as of the date of the signature by the required approval authorities below.

CITY OF SANTA FE:

ALAN WEBBER, MAYOR

DATE: Dec 9, 2021

ATTEST:

KRISTINE BUSTOS MIHELCIC,
CITY CLERK
GB MTG 12/08/2021

CITY ATTORNEY'S OFFICE:

Marcos Martinez
Marcos Martinez (Jul 28, 2021 09:10 MDT)
SENIOR ASSISTANT CITY ATTORNEY

APPROVED FOR FINANCES:

MARY MCCOY, FINANCE DIRECTOR
5000362.520150; 5000367.520150
Org. Name/Org#. AJH
AJH

CONTRACTOR:
TLC PLUMBING, INC.

NAME: Eddie C. Padilla

TITLE: Chief Development Officer

DATE: 8/23/21

CRS# 02-226090-000
BRN# 222153

IN WITNESS WHEREOF, the Parties have executed this Agreement as of the date of the signature by the required approval authorities below.

CITY OF SANTA FE:

ALAN WEBBER, MAYOR

DATE: Dec 9, 2021

ATTEST:

KRISTINE BUSTOS MIHELCIC,
CITY CLERK
GB MTG 12/08/2021

CITY ATTORNEY'S OFFICE:

Marcos Martinez
Marcos Martinez (Jul 28, 2021 09:10 MDT)
SENIOR ASSISTANT CITY ATTORNEY

APPROVED FOR FINANCES:

MARY MCCOY, FINANCE DIRECTOR
5000362.520150; 5000367.520150
Org. Name/Org#. AJH
AJH

CONTRACTOR:

SUB SURFACE CONTRACTING, INC.

NAME:

TITLE: PRESIDENT

DATE: 8-26-21

CRS# 02-104256-000
BRN# 46991

IN WITNESS WHEREOF, the Parties have executed this Agreement as of the date of the signature by the required approval authorities below.

CITY OF SANTA FE:

ALAN WEBBER, MAYOR

DATE: Dec 9, 2021

ATTEST:

KRISTINE BUSTOS MIHELCIC,
CITY CLERK
GB MTG 12/08/2021

CITY ATTORNEY'S OFFICE:

Marcos Martinez
Marcos Martinez (Jul 28, 2021 09:10 MDT)
SENIOR ASSISTANT CITY ATTORNEY

APPROVED FOR FINANCES:

MARY MCCOY, FINANCE DIRECTOR
5000362.520150; 5000367.520150
Org. Name/Org#. AJH
AJH

CONTRACTOR:
Allied 360 Construction, LLC.

NAME: Patrick Herrera
TITLE: Managing Member
DATE: 9/16/2021

CRS# 03-147576000-0
BRN# 231055

CITY OF SANTA FE
PURCHASING OFFICE
200 Lincoln Ave Room 122 Santa Fe, NM 87505
Fran Dunaway, CPO
21/46/B POTW On Call Repair and Replacement

	AWARDED ITEMS	1) Allied 360 Construction, LLC	2) Sub Surface Contracting, Inc.	3) TLC Plumbing, Inc.
ITEM #	ITEM & DESCRIPTION	PRICES	PRICES	PRICES
1	Point Repair, 6" to 8" pipe, remove and replace, 0' to 6 ' in depth including PVC pipe	$4,200.00	$3,550.00	$6,345.00
2	Point Repair, 6" to 8" pipe, remove and replace, 6' to 10' in depth including PVC pipe	$4,400.00	$4,650.00	$9,235.00
3	Point Repair, 6" to 8" pipe, remove and replace, 10' to 16' in depth including PVC pipe	$5,000.00	$8,300.00	$7,365.00
4	Point Repair Additional Cost for remove and replace, greater than 16' depth for 6" to 8" pipe including PVC pipe	$197.00	$1,685.00	$220.00
5	Point Repair, 10" to 15" pipe, remove and replace, 0' to 6 ' in depth including PVC pipe	$5,700.00	$4,450.00	$7,500.00
6	Point Repair, 10" to 15" pipe, remove and replace, 6' to 10' in depth including PVC pipe	$5,200.00	$6,700.00	$10,390.00
7	Point Repair, 10" to 15" pipe, remove and replace, 10' to 16' in depth including PVC pipe	$6,200.00	$9,350.00	$13,945.00
8	Point Repair Additional Cost for excavation greater than 16' depth for 10" to 15" pipe including PVC pipe	$239.00	$1,875.00	$220.00
9	Point Repair, 18" to 24" pipe, remove and replace, 0' to 6' in depth including PVC pipe	$7,600.00	$4,975.00	$11,250.00
10	Point Repair, 18" to 24" pipe, remove and replace, 6' to 10' in depth including PVC pipe	$8,600.00	$7,100.00	$13,255.00
11	Point Repair, 18" to 24" pipe, remove and replace, 10' to 16' in depth including PVC pipe	$9,500.00	$10,500.00	$16,810.00
12	Point Repair Additional Cost for excavation greater than 16' depth for 18" to 24" pipe including PVC pipe	$347.00	$1,875.00	$220.00
13	8" diameter SDR 26 PVC sewer pipe, furnish & place in open trench, complete in place.	$105.00	$75.00	$43.95
14	10" diameter SDR 26 PVC sewer pipe, furnish & place in open trench, complete in place.	$115.00	$85.00	$58.90
15	12" diameter SDR 26 PVC sewer pipe, furnish & place in open trench, complete in place.	$130.00	$95.00	$75.65
16	15" diameter SDR 26 PVC sewer pipe, furnish & place in open trench, complete in place.	$167.00	$105.00	$100.50
17	18" diameter SDR 26 PVC sewer pipe, furnish & place in open trench, complete in place.	$196.00	$125.00	$138.45
18	24" diameter SDR 26 PVC sewer pipe, furnish & place in open trench, complete in place.	$250.00	$140.00	$229.85
19	Trenching, Backfilling & Compaction for 8" to 10" diameter sewer pipe, 0' to 6' in depth, pipe not included, complete.	$25.00	$65.00	$64.20
20	Trenching, Backfilling & Compaction for 8" to 10" diameter sewer pipe, 6' to 10' in depth, pipe not included, complete.	$35.00	$85.00	$74.90
21	Trenching, Backfilling & Compaction for 8" to 10" diameter sewer pipe, 10' to 16' in depth, pipe not included, complete.	$47.00	$125.00	$109.20
22	Additional Cost for Trenching, Backfilling & Compaction greater than 16' depth for 8" to 10" pipe	$45.00	$255.00	$18.20
23	Trenching, Backfilling & Compaction for 12" to 15" diameter sewer pipe, 0' to 6' in depth, pipe not included, complete.	$60.00	$75.00	$64.20
24	Trenching, Backfilling & Compaction for12" to 15" diameter sewer pipe, 6' to 10' in depth, pipe not included, complete.	$75.00	$90.00	$74.90
25	Trenching, Backfilling & Compaction for 12" to 15" diameter sewer pipe, 10' to 16' in depth, pipe not included, complete.	$95.00	$140.00	$109.20
26	Additional Cost for Trenching, Backfilling & Compaction greater than 16' depth for 12" to 15" pipe	$110.00	$265.00	$19.85
27	Trenching, Backfilling & Compaction for 18" to 24" diameter sewer pipe, 0' to 6' in depth, pipe not included, complete.	$110.00	$80.00	$64.20

CITY OF SANTA FE
PURCHASING OFFICE
200 Lincoln Ave Room 122 Santa Fe, NM 87505
Fran Dunaway, CPO
21/46/B POTW On Call Repair and Replacement

	AWARDED ITEMS	1) Allied 360 Construction, LLC	2) Sub Surface Contracting, Inc.	3) TLC Plumbing, Inc.
ITEM #	ITEM & DESCRIPTION	PRICES	PRICES	PRICES
28	Trenching, Backfilling & Compaction for18" to 24" diameter sewer pipe, 6' to 10' in depth, pipe not included, complete.	$112.00	$95.00	$74.90
29	Trenching, Backfilling & Compaction for 18" to 24" diameter sewer pipe, 10' to 16' in depth, pipe not included, complete.	$125.00	$165.00	$136.50
30	Additional Cost for Trenching, Backfilling & Compaction greater than 16' depth for 18" to 14" pipe	$125.00	$275.00	$21.85
31	Pipe Displacement (bursting) 6" to 8" from M.H. to M.H.	$227.00	$498.00	$70.00
32	Pipe Displacement (bursting) 8" to 8" from M.H. to M.H.	$255.00	$585.00	$70.00
33	Pipe Displacement (bursting) 8" to 10" from M.H. to M.H.	$300.00	$610.00	$85.00
34	Traffic Control Residential –per Work Zone –per Day	$1,800.00	$1,220.00	$80.00
35	Traffic Control Non-Residential Major Collectors and Arterials – per Work Zone –per Day	$2,000.00	$1,395.00	$530.00
36	Asphalt Removal, Disposal & Replacement including 6" Base Course and 4" Asphalt	$2,250.00	$17,000.00	$7,550.00
37	Curb/Gutter Removal, Disposal and Replacement	$31.00	$80.00	$65.30
38	Sidewalk Removal, Disposal and Replacement	$41.00	$225.00	$98.45
39	New Manhole, 4' Diameter, type "C" or "E", 6' deep or less, including removal, disposal and restoration of surface, complete in place. Asphalt is separate bid item	$6,800.00	$6,500.00	$12,115.00
40	New Manhole, 4' Diameter, type "C" or "E", over 6' to 10' deep, including removal, disposal and restoration of surface, complete in place. Asphalt is separate bid item	$7,800.00	$8,500.00	$14,360.00
41	New Manhole, 4' Diameter, type "C" or "E", over 10' to 16' deep, including removal, disposal and restoration of surface, complete in place. Asphalt is separate bid item	$1,400.00	$12,000.00	$18,815.00
42	Additional Cost for depth greater than 16' depth for 4' Diameter Manhole	$1,100.00	$975.00	$560.00
43	New 12 inch thick Concrete Manhole Collar where none exists in Dirt Road or Easement area	$2,200.00	$1,550.00	$1,700.00
44	MH Wall Rehabilitation	$100.00	$600.00	$330.00
45	MH Inverts & Shelf Rehabilitation	$2,100.00	$2,400.00	$3,600.00
46	MH Inverts & Base Replacement	$6,200.00	$4,450.00	$20,370.00
47	Sewer Service Connection as part of a Point Repair/Open Trench	$4,250.00	$950.00	$4,320.00
48	Sewer Service Connection- as part of a Pipe Burst 0 to 6' in Depth including Asphalt Replacement.	$9,700.00	$1,450.00	$4,320.00
49	Sewer Service Connection- as part of a Pipe Burst 6' to 10' in Depth including Asphalt Replacement	$1,100.00	$1,825.00	$4,320.00
50	Sewer Service Connection- as part of a Pipe Burst 10' and Greater in Depth including Asphalt Replacement	$395.00	$4,800.00	$430.00
51	MH Cleaning (i.e. debris, roots, etc.)	$4,400.00	$1,275.00	$3,000.00
52	Adjust Existing MH F&C (from grade to 24" deep) including Concrete Collar (City Furnished F&C)	$4,200.00	$2,400.00	$3,800.00
53	Adjust Existing MH F&C (from 24" and deeper) including Concrete Collar(City Furnished F&C & Barrels)	$2,200.00	$2,850.00	$4,255.00
54	Easement Clearance and Grading for Access & Repair Work	$47.00	$250.00	$10.00
55	Rip Rap & Wire Mattress –New Installation	$5,000.00	$675.00	$800.00
56	Gabion Basket –New Installation	$1,100.00	$710.00	$650.00
57	4 to 6 inch Sewer Service Connection to Existing Manhole, 0 to 8 feet Deep -Core Drill	$1,200.00	$1,800.00	$3,415.00
58	4 to 6 inch Sewer Service Connection to Existing Manhole, Greater than 8 feet Deep -Core Drill	$2,400.00	$2,300.00	$340.00
59	Rock Excavation	$65.00	$375.00	$140.00
60	Select Fill Material-Delivered	$3,200.00	$1,295.00	$2,730.00

CITY OF SANTA FE
PURCHASING OFFICE
200 Lincoln Ave Room 122 Santa Fe, NM 87505
Fran Dunaway, CPO
21/46/B POTW On Call Repair and Replacement

	AWARDED ITEMS	**1) Allied 360 Construction, LLC**	**2) Sub Surface Contracting, Inc.**	**3) TLC Plumbing, Inc.**
ITEM #	ITEM & DESCRIPTION	PRICES	PRICES	PRICES
61	Smoke Testing-Supervisor	$14,000.00	$4,800.00	$10,000.00
62	Smoke Testing-Helper	$8,000.00	$3,600.00	$4,240.00
63	Smoke Testing Traffic Control Allowance	$5,000.00	$5,000.00	$5,000.00
64	Materials Testing - Allowance	$2,000.00	$2,000.00	$2,000.00
65	Street Cut Permits - Allowance	$2,000.00	$2,000.00	$2,000.00
	Total Base Bid Incl: allowances, mobilization, Demobilization, labor, materials, equipment, bonding, insurance, etc.	**$163,971.00**	**$166,293.00**	**$244,863.15**

Signature: P. Fred Heerbrandt, P.E.

Email: pfheerbrandt@ci.santa-fe.nm.us

ACORD

CERTIFICATE OF LIABILITY INSURANCE

DATE (MM/DD/YYYY) 6/24/2024

THIS CERTIFICATE IS ISSUED AS A MATTER OF INFORMATION ONLY AND CONFERS NO RIGHTS UPON THE CERTIFICATE HOLDER. THIS CERTIFICATE DOES NOT AFFIRMATIVELY OR NEGATIVELY AMEND, EXTEND OR ALTER THE COVERAGE AFFORDED BY THE POLICIES BELOW. THIS CERTIFICATE OF INSURANCE DOES NOT CONSTITUTE A CONTRACT BETWEEN THE ISSUING INSURER(S), AUTHORIZED REPRESENTATIVE OR PRODUCER, AND THE CERTIFICATE HOLDER.

IMPORTANT: If the certificate holder is an ADDITIONAL INSURED, the policy(ies) must have ADDITIONAL INSURED provisions or be endorsed. If SUBROGATION IS WAIVED, subject to the terms and conditions of the policy, certain policies may require an endorsement. A statement on this certificate does not confer rights to the certificate holder in lieu of such endorsement(s).

PRODUCER License # 0757776 HUB International Insurance Services (SOW) 6565 Americas Parkway Suite 720 Albuquerque, NM 87110	CONTACT NAME: PHONE (A/C, No, Ext): (505) 828-4000 FAX (A/C, No): (866) 487-3972 E-MAIL ADDRESS: clarice.montoya@hubinternational.com
INSURED TLC Company Inc. 5000 Edith Blvd NE Albuquerque, NM 87107	INSURER(S) AFFORDING COVERAGE — NAIC # INSURER A : The Phoenix Insurance Company — 25623 INSURER B : Travelers Property Casualty Company of America — 25674 INSURER C : Associated Builders & Contractors of NM Merit Shop Workers Com INSURER D : INSURER E : INSURER F :

COVERAGES **CERTIFICATE NUMBER:** **REVISION NUMBER:**

THIS IS TO CERTIFY THAT THE POLICIES OF INSURANCE LISTED BELOW HAVE BEEN ISSUED TO THE INSURED NAMED ABOVE FOR THE POLICY PERIOD INDICATED. NOTWITHSTANDING ANY REQUIREMENT, TERM OR CONDITION OF ANY CONTRACT OR OTHER DOCUMENT WITH RESPECT TO WHICH THIS CERTIFICATE MAY BE ISSUED OR MAY PERTAIN, THE INSURANCE AFFORDED BY THE POLICIES DESCRIBED HEREIN IS SUBJECT TO ALL THE TERMS, EXCLUSIONS AND CONDITIONS OF SUCH POLICIES. LIMITS SHOWN MAY HAVE BEEN REDUCED BY PAID CLAIMS.

INSR LTR	TYPE OF INSURANCE	ADDL INSD	SUBR WVD	POLICY NUMBER	POLICY EFF (MM/DD/YYYY)	POLICY EXP (MM/DD/YYYY)	LIMITS	
A	X COMMERCIAL GENERAL LIABILITY CLAIMS-MADE X OCCUR GEN'L AGGREGATE LIMIT APPLIES PER: POLICY X PRO-JECT LOC OTHER:	X	X	DT-CO-7W41389A-PHX-23	7/1/2024	7/1/2025	EACH OCCURRENCE DAMAGE TO RENTED PREMISES (Ea occurrence) MED EXP (Any one person) PERSONAL & ADV INJURY GENERAL AGGREGATE PRODUCTS - COMP/OP AGG	$ 1,000,000 $ 500,000 $ $ 1,000,000 $ 2,000,000 $ 2,000,000
B	AUTOMOBILE LIABILITY X ANY AUTO OWNED AUTOS ONLY SCHEDULED AUTOS HIRED AUTOS ONLY NON-OWNED AUTOS ONLY	X	X	810-6W400914-24-26	7/1/2024	7/1/2025	COMBINED SINGLE LIMIT (Ea accident) BODILY INJURY (Per person) BODILY INJURY (Per accident) PROPERTY DAMAGE (Per accident)	$ 1,000,000 $ $ $
B	X UMBRELLA LIAB X OCCUR EXCESS LIAB CLAIMS-MADE DED X RETENTION $ 10,000			CUP-6W550351-23-26	7/1/2024	7/1/2025	EACH OCCURRENCE AGGREGATE	$ 9,000,000 $ 9,000,000
C	WORKERS COMPENSATION AND EMPLOYERS' LIABILITY ANY PROPRIETOR/PARTNER/EXECUTIVE OFFICER/MEMBER EXCLUDED? Y/N N (Mandatory in NH) If yes, describe under DESCRIPTION OF OPERATIONS below	N / A	X	EWC008469	12/31/2023	12/31/2024	X PER STATUTE OTH-ER E.L. EACH ACCIDENT E.L. DISEASE - EA EMPLOYEE E.L. DISEASE - POLICY LIMIT	$ 1,000,000 $ 1,000,000 $ 1,000,000
B	Instal Floater/BR			QT-630-6W945490-TIL-23	7/1/2024	7/1/2025	Builders Risk	6,000,000

DESCRIPTION OF OPERATIONS / LOCATIONS / VEHICLES (ACORD 101, Additional Remarks Schedule, may be attached if more space is required)

.

SEE ATTACHED ACORD 101

CERTIFICATE HOLDER

City of Santa Fe
P.O. Box 909
Santa Fe, NM 87504-0909

CANCELLATION

SHOULD ANY OF THE ABOVE DESCRIBED POLICIES BE CANCELLED BEFORE THE EXPIRATION DATE THEREOF, NOTICE WILL BE DELIVERED IN ACCORDANCE WITH THE POLICY PROVISIONS.

AUTHORIZED REPRESENTATIVE

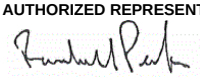

ACORD 25 (2016/03) © 1988-2015 ACORD CORPORATION. All rights reserved.
The ACORD name and logo are registered marks of ACORD

Signature: John Dupuis (Oct 24, 2024 11:06 MDT)

Email: jedupuis@santafenm.gov

Signature:

Email: mldozier@santafenm.gov

3203058 TLC amed 1 packet to pay June invoices int FINAL FINAL

Final Audit Report 2024-10-24

Created:	2024-10-22
By:	JAMES EDWARDS (jwedwards@santafenm.gov)
Status:	Signed
Transaction ID:	CBJCHBCAABAAdTWKudN5_2RMfZfMoym5ML4T8-Pgc4F-

"3203058 TLC amed 1 packet to pay June invoices int FINAL FI NAL" History

Document created by JAMES EDWARDS (jwedwards@santafenm.gov)
2024-10-22 - 4:28:41 PM GMT- IP address: 63.232.20.2

Document emailed to ajhopkins@santafenm.gov ajhopkins@santafenm.gov (ajhopkins@santafenm.gov) for signature
2024-10-22 - 4:31:17 PM GMT

Email viewed by ajhopkins@santafenm.gov ajhopkins@santafenm.gov (ajhopkins@santafenm.gov)
2024-10-22 - 6:05:03 PM GMT- IP address: 104.47.65.254

Document e-signed by ajhopkins@santafenm.gov ajhopkins@santafenm.gov (ajhopkins@santafenm.gov)
Signature Date: 2024-10-22 - 6:05:47 PM GMT - Time Source: server- IP address: 63.232.20.2

Document sent to JoAnn Lovato (jdlovato@santafenm.gov) and Travis Dutton-Leyda (tkduttonleyda@santafenm.gov) for signature. One of them to sign
2024-10-22 - 6:05:51 PM GMT

Document e-signed by Travis Dutton-Leyda (tkduttonleyda@santafenm.gov)
Signature Date: 2024-10-22 - 8:50:14 PM GMT - Time Source: server- IP address: 63.232.20.2

Document emailed to John Dupuis (jedupuis@santafenm.gov) for signature
2024-10-22 - 8:50:18 PM GMT

Document e-signed by John Dupuis (jedupuis@santafenm.gov)
Signature Date: 2024-10-23 - 5:06:09 PM GMT - Time Source: server- IP address: 174.240.19.84

Document emailed to MICHAEL DOZIER (mldozier@santafenm.gov) for signature
2024-10-23 - 5:06:13 PM GMT

Powered by Adobe Acrobat Sign

Email viewed by MICHAEL DOZIER (mldozier@santafenm.gov)
2024-10-24 - 3:38:37 PM GMT- IP address: 63.232.20.2

Document e-signed by MICHAEL DOZIER (mldozier@santafenm.gov)
Signature Date: 2024-10-24 - 3:39:02 PM GMT - Time Source: server- IP address: 63.232.20.2

Document emailed to EMILY OSTER (ekoster@santafenm.gov) for signature
2024-10-24 - 3:39:08 PM GMT

Email viewed by EMILY OSTER (ekoster@santafenm.gov)
2024-10-24 - 11:28:46 PM GMT- IP address: 104.47.64.254

Document e-signed by EMILY OSTER (ekoster@santafenm.gov)
Signature Date: 2024-10-24 - 11:30:06 PM GMT - Time Source: server- IP address: 63.232.20.2

Agreement completed.
2024-10-24 - 11:30:06 PM GMT

CITY OF SANTA FE

Date: October 22, 2024

To: Governing Body
Finance
Quality of Life

Via: Henri Hammond-Paul, Community Health and Safety Department Director

From: **Julie Sanchez, Youth and Family Services Division Director**

HENRI HAMMOND-PAUL (Nov 8, 2024 10:12 MST)

Subject: **The Life Link Amendment**

Vendor Name: **The Life Link**

Vendor Number: **1340**

ITEM AND ISSUE:
Request for Approval of Contract Amendment No. 1 with the Life Link Item# 23-0700 of Recovery Funds Subrecipient Contract Increasing the Total Amount to $1,600,000 for Professional Services and extend the term to June 30th, 2026. (Youth and Family Services Division Director; Julie Sanchez, jjsanchez@santafenm.gov)

Action Requested: **Approve Contract Amendment for The Life Link**

BACKGROUND AND SUMMARY:
The Life Link has been the Service Provider at the Safe Outdoor Space at Christ Lutheran Church since it opened. The Contract is being amended in order to continue their excellent service in support of providing services to formerly unsheltered individuals.

PROCUREMENT METHOD:
RFA# 24-13-A

Chief Procurement Officer Approval:_____ **Date:** Nov 8, 2024
Comment/Exceptions:_____

Supporting Information:

CONTRACT NUMBER:
The FY25 Munis contract number is 3204464
The FY25 Project ledger number is COM222400C

$$$$$ SOURCE/REVENUE: ☒**Expense** ☐**Revenue**
The funding source is:

Fund Name/Number: Health and Human Services/Fund 240
Munis Org Name/Number: Community Services/2400122
Munis Object Name/Number: Grants and Services/ 510400

If the project is grant funded? List grant award number*:* *SLFRP5552*

Grant Manager / Accounting Officer Approval: Matthew Bonifer Matthew Bonifer (Nov 8, 2024 17:41 MST) **Date:** Nov 8, 2024
Comment/Exceptions: _____

Project Ledger #:_____

Budget Officer Approval: ALEXIS LOTERO (Nov 8, 2024 17:13 MST) **Date:** Nov 8, 2024
Comment/Exceptions: _____

CAPITAL ASSET (will this procurement result in a tangible item that costs more than $5,000?):

☐Yes | ☐ No

 # (if known): _____

Repair or Replacement of Existing Equipment:

☐Yes | ☒ No
If yes -> ☐Repair | ☐ Replacement

Please explain: NA

Capital Project:
(New and improvement projects that are going to cost $10,000 or more)
☐ Yes | ☒ No

Project Ledger #:_____

Anticipated length of project: _____

Asset Manager Approval:_____ **Date:**_____
Comment/Exceptions: _____

Department Approvals:
IT Components: ☐ **Yes | ☒ No**
Vehicles: ☐ **Yes | ☒ No**
Facilities, Furniture, Fixtures, Equipment: ☐ **Yes | ☒ No**

Approval:_____ **Title:**_____ **Date**:_____
Approval:_____ **Title:**_____ **Date**:_____
Comment & Exceptions:

Department Contract Administrator Contact Info:

ATTACHMENTS:

Santa Fe Business License
Certificate of Liability Insurance
Original Contract

\ Item# 23-0700
Munis Contract# 3204464
RFA# 24/13/A

CITY OF SANTA FE
AMENDMENT No. 1 TO
RECOVERY FUNDS SUBRECIPIENT
CONTRACT BETWEEN CITY OF SANTA FE AND THE LIFE LINK
FOR SERVICES
ITEM# 23-0700

This AMENDMENT No. 1 (the "Amendment") amends the CITY OF SANTA FE RECOVERY FUNDS SUBRECIPIENT CONTRACT, dated December 21, 2023 (the "Contract"), between the City of Santa Fe (the "City") and **The Life Link**. (the "Contractor"). The date of this Amendment shall be the date when it is executed by the City and the Contractor whichever occurs last.

RECITALS:

A. Under the terms of the Contract, Contractor has agreed to provide outreach, housing navigation, case management, life skills training, assessments and other operational services to homeless individuals residing at the Safe Outdoor Space (SOS).

B. Pursuant to Article 7 of the Contract, and for good and valuable consideration, the receipt and sufficiency of which are acknowledged by the parties, the City and the Contractor agree as follows:

1. COMPENSATION.

Article 3 of the Contract is amended to increase the amount of compensation by a total of one million one hundred fifty-nine thousand eight hundred and eight dollars ($1,159,808) as to reach a total compensation as indicated in Exhibit A (SOS Adjusted Budget Proposal), so that the first paragraph of Article 3, under Compensation reads in its entirety as follows:

A. The City shall pay the Contractor in full payment for services satisfactorily performed based upon the deliverables outlined in the Scope of Work. The total compensation under this Contract shall not exceed one million six hundred thousand dollars ($1,600,000.00), including New Mexico gross receipts tax. This amount is a maximum and not a guarantee that the work assigned to be performed by Contractor under this Contract shall equal the amount stated herein. The Parties do not intend for the Contractor to continue to provide Services without compensation when the total compensation amount is reached. Contractor is responsible for notifying the City when the Services provided under this Contract reach the total compensation amount. In no event will the Contractor be paid for Services provided in excess of the total compensation amount without this Contract being amended in writing prior to services, in excess of the total compensation amount being provided.

2. TERM.

Article 4of the Contract is hereby deleted in its entirety and following language is substituted so that Article 4, "Term" reads in its entirety as follows:

THIS CONTRACT SHALL NOT BECOME EFFECTIVE UNTIL APPROVED IN WRITING BY THE CITY. This Contract shall begin on date approved by the City and end on June 30th, 2026. In no event will the term exceed the duration allowed by statute, NMSA 1978 13-1-150.3.

3. CONTRACT IN FULL FORCE.

Except as specifically provided in this Amendment, the Contract remains and shall remain in full force and effect, in accordance with its terms.

IN WITNESS WHEREOF, the parties have executed this Amendment No. 1 to the Contract as of the dates set forth below.

CITY OF SANTA FE:

_____
ALAN WEBBER, MAYOR

DATE:_____

ATTEST:

_____
CITY CLERK

CITY ATTORNEY'S OFFICE:

_____
ASSISTANT CITY ATTORNEY

APPROVED FOR FINANCES:

Emily K. Oster
_____
EMILY OSTER, FINANCE DIRECTOR

CONTRACTOR:
THE LIFE LINK

_____
MICHAEL DeBERNARDI, CEO

DATE: Nov 8, 2024
CRS# 02-097780-00-8
Registration #29352

EXHIBIT A

SOS Adjusted Budget Proposal

EXPENSES			
Expense Categories	**Details**	**Totals**	
Contractual Services	Mileage	19,600.00	
	Program Evaluator	27,025.00	
	Work Stipends for Residents	30,000.00	
	Flex funds for client needs	80,854.00	
	Training Services	1,388.00	
	Internet Services	2,000.00	
	Laundry Services	10,000.00	
	Recruiting Services	1,000.00	
	Food preparation staff $14.60 x 15 hrs wk x 52 wks	11,388.00	
	Meals (2 meals per day 5 days a week)	23,000.00	
	Travel	4,078.00	
	Contractual Subtotal	210,333.00	
Personnel	Program Director + Benefits	39,999.00	
	Outreach Program Director + Benefits	79,860.00	
	Program Manager + Benefits	151,008.00	
	Outreach Specialist(s) + Benefits	314,600.00	
	Site Coordinator (s) + Benefits	176,160.00	
	Case Manager (s) + Benefits	179,560.00	
	Clubhouse Manager + Benefits	10,000.00	
	Security for after hours 40 hrs per wk @ $24 x 52 wk	208,480.00	
	Overtime for staff	180,000.00	
	Personnel Subtotal	1,339,667.00	
Equipment Supplies	Supplies table/chairs/ phone chargers / food storage etc.	20,000.00	
	Maintenance + Repair	10,000.00	
	Transportation Services	20,000.00	
	Equipment/Supplies	50,000.00	
	BUDGET TOTAL	**1,600,000.00**	

REVISED DRAFT Life Link_S0S_Amendment No. 1-final CAO

Final Audit Report 2024-11-08

Created:	2024-11-07
By:	Amy Cawthon (amcawthon@santafenm.gov)
Status:	Signed
Transaction ID:	CBJCHBCAABAAIMMMJRPfEIDxlx3Hmg9n4pFGmdhZbO-_

"REVISED DRAFT Life Link_S0S_Amendment No. 1-final CAO" History

Document created by Amy Cawthon (amcawthon@santafenm.gov)
2024-11-07 - 4:40:33 PM GMT- IP address: 63.232.20.2

Document emailed to Michael DeBernardi (drdebernardi@thelifelink.org) for signature
2024-11-07 - 4:41:14 PM GMT

Email viewed by Michael DeBernardi (drdebernardi@thelifelink.org)
2024-11-07 - 4:45:04 PM GMT- IP address: 96.19.182.76

Document e-signed by Michael DeBernardi (drdebernardi@thelifelink.org)
Signature Date: 2024-11-08 - 4:30:31 PM GMT - Time Source: server- IP address: 65.133.22.242

Document emailed to Rebecca Mnuk-Herrmann (ramnukherrmann@santafenm.gov) for signature
2024-11-08 - 4:30:35 PM GMT

Email viewed by Rebecca Mnuk-Herrmann (ramnukherrmann@santafenm.gov)
2024-11-08 - 4:34:27 PM GMT- IP address: 174.218.18.59

Document e-signed by Rebecca Mnuk-Herrmann (ramnukherrmann@santafenm.gov)
Signature Date: 2024-11-08 - 4:35:05 PM GMT - Time Source: server- IP address: 174.218.18.59

Agreement completed.
2024-11-08 - 4:35:05 PM GMT

Powered by Adobe Acrobat Sign

City of Santa Fe

Treasury Department
200 Lincoln Ave.
Santa Fe, New Mexico 87504-0909
505-955-6551

BUSINESS REGISTRATION

Business Name: THE LIFE LINK
DBA: THE LIFE LINK - 505 GET FREE

Business Location: 1807 SECOND ST 46A
SANTA FE , NM 87505

Owner: THE LIFE LINK

License Number: 227753

Issued Date: December 04, 2023

Expiration Date: December 04, 2024

License Type: Business License - Renewable

Classification: Business Registration - Standard

Fees Paid: $35.00

THE LIFE LINK
2325 CERRILLOS RD
SANTA FE , NM 87505

THIS IS NOT A CONSTRUCTION PERMIT OR SIGN PERMIT. APPROPRIATE PERMITS MUST BE OBTAINED FROM THE CITY OF SANTA FE BUILDING PERMIT DIVISION PRIOR TO COMMENCEMENT OF ANY CONSTRUCTION OR THE INSTALLATION OF ANY EXTERIOR SIGN.

THIS REGISTRATION/LICENSE IS NOT TRANSFERRABLE TO OTHER BUSINESSES OR PREMISES.

TO BE POSTED IN A CONSPICUOUS PLACE

CERTIFICATE OF LIABILITY INSURANCE

DATE (MM/DD/YYYY): 11/06/2023

THIS CERTIFICATE IS ISSUED AS A MATTER OF INFORMATION ONLY AND CONFERS NO RIGHTS UPON THE CERTIFICATE HOLDER. THIS CERTIFICATE DOES NOT AFFIRMATIVELY OR NEGATIVELY AMEND, EXTEND OR ALTER THE COVERAGE AFFORDED BY THE POLICIES BELOW. THIS CERTIFICATE OF INSURANCE DOES NOT CONSTITUTE A CONTRACT BETWEEN THE ISSUING INSURER(S), AUTHORIZED REPRESENTATIVE OR PRODUCER, AND THE CERTIFICATE HOLDER.

IMPORTANT: If the certificate holder is an ADDITIONAL INSURED, the policy(ies) must have ADDITIONAL INSURED provisions or be endorsed. If SUBROGATION IS WAIVED, subject to the terms and conditions of the policy, certain policies may require an endorsement. A statement on this certificate does not confer rights to the certificate holder in lieu of such endorsement(s).

PRODUCER Daniels Insurance, Inc.-Santa Fe 805 St Michaels Drive Santa Fe NM 87505	CONTACT NAME: Ed Risley PHONE (A/C, No, Ext): (505) 982-4302 FAX (A/C, No): (505) 989-9186 E-MAIL ADDRESS: erisley@danielsinsuranceinc.com
INSURED The Life Link P.O. Box 6094 Santa Fe NM 875026094	INSURER(S) AFFORDING COVERAGE — NAIC # INSURER A: New Mexico Premier Insurance Com — 13675 INSURER B: ACE Property and Casualty Insura — 20699 INSURER C: Ace American Insurance Company — 22667 INSURER D: Travelers Casualty and Surety — 19038 INSURER E: — INSURER F: —

COVERAGES MN **CERTIFICATE NUMBER:** Cert ID 36899 (20) **REVISION NUMBER:**

THIS IS TO CERTIFY THAT THE POLICIES OF INSURANCE LISTED BELOW HAVE BEEN ISSUED TO THE INSURED NAMED ABOVE FOR THE POLICY PERIOD INDICATED. NOTWITHSTANDING ANY REQUIREMENT, TERM OR CONDITION OF ANY CONTRACT OR OTHER DOCUMENT WITH RESPECT TO WHICH THIS CERTIFICATE MAY BE ISSUED OR MAY PERTAIN, THE INSURANCE AFFORDED BY THE POLICIES DESCRIBED HEREIN IS SUBJECT TO ALL THE TERMS, EXCLUSIONS AND CONDITIONS OF SUCH POLICIES. LIMITS SHOWN MAY HAVE BEEN REDUCED BY PAID CLAIMS.

INSR LTR	TYPE OF INSURANCE	ADDL INSD	SUBR WVD	POLICY NUMBER	POLICY EFF (MM/DD/YYYY)	POLICY EXP (MM/DD/YYYY)	LIMITS	
C	[X] COMMERCIAL GENERAL LIABILITY [ ] CLAIMS-MADE [X] OCCUR GEN'L AGGREGATE LIMIT APPLIES PER: [ ] POLICY [ ] PRO-JECT [X] LOC [ ] OTHER:			SVRD37800545002	11/30/2023	11/30/2024	EACH OCCURRENCE DAMAGE TO RENTED PREMISES (Ea occurrence) MED EXP (Any one person) PERSONAL & ADV INJURY GENERAL AGGREGATE PRODUCTS - COMP/OP AGG Empl Benefits Liab	$ 1,000,000 $ 1,000,000 $ 20,000 $ 1,000,000 $ 3,000,000 $ 3,000,000 $ 1,000,000
B	AUTOMOBILE LIABILITY [X] ANY AUTO [ ] OWNED AUTOS ONLY [ ] SCHEDULED AUTOS [ ] HIRED AUTOS ONLY [ ] NON-OWNED AUTOS ONLY			CALH0861555A002	11/30/2023	11/30/2024	COMBINED SINGLE LIMIT (Ea accident) BODILY INJURY (Per person) BODILY INJURY (Per accident) PROPERTY DAMAGE (Per accident)	$ 1,000,000 $ $ $
	[ ] UMBRELLA LIAB [ ] OCCUR [ ] EXCESS LIAB [ ] CLAIMS-MADE [ ] DED [ ] RETENTION $						EACH OCCURRENCE AGGREGATE	$ $
A	WORKERS COMPENSATION AND EMPLOYERS' LIABILITY ANYPROPRIETOR/PARTNER/EXECUTIVE OFFICER/MEMBER EXCLUDED? Y / N [ ] (Mandatory in NH) If yes, describe under DESCRIPTION OF OPERATIONS below	N / A		6145.134	11/27/2023	11/27/2024	[X] PER STATUTE [ ] OTH-ER E.L. EACH ACCIDENT E.L. DISEASE - EA EMPLOYEE E.L. DISEASE - POLICY LIMIT	$ 1,000,000 $ 1,000,000 $ 1,000,000
C	Professional Services			OGLG25507411002	11/30/2023	11/30/2024	Limit	$ 1,000,000
D	Crime			105649125	11/01/2023	11/30/2024	Employee Theft	$ 400,000

DESCRIPTION OF OPERATIONS / LOCATIONS / VEHICLES (ACORD 101, Additional Remarks Schedule, may be attached if more space is required)

General liability policies contain a Blanket Additional Insured provision that establishes the scope of Additional Insured coverage granted to the Certificate Holder.

CERTIFICATE HOLDER

City of Santa Fe
P.O. Box 909
Santa Fe NM 87504

CANCELLATION

SHOULD ANY OF THE ABOVE DESCRIBED POLICIES BE CANCELLED BEFORE THE EXPIRATION DATE THEREOF, NOTICE WILL BE DELIVERED IN ACCORDANCE WITH THE POLICY PROVISIONS.

AUTHORIZED REPRESENTATIVE

© 1988-2015 ACORD CORPORATION. All rights reserved.

MEMORANDUM

TO: Governing Body
VIA: John Blair, City Manager
FROM: Mary McCoy, Finance Department Director
Rich Brown, Community Development Department Director
Kyra Ochoa, Community Health and Safety Department Director KO (Apr 22, 2022 13:27 MDT)
Regina Wheeler, Public Works Department Director RW (Apr 22, 2022 13:14 MDT)
RE: City of Santa Fe's American Rescue Plan Act (ARPA) Grant Allocation
DATE: April 22, 2022

Item and Issue:
Request for Approval of an FY22 Budget Adjustment Resolution (BAR) in amount of $15,049,631 for the American Rescue Plan Act (ARPA) grant.

Description:
The federal American Rescue Plan Act (ARPA) established the Coronavirus State Fiscal Recovery Fund and Coronavirus Local Fiscal Recovery Fund, which together make up the Coronavirus State and Local Fiscal Recovery Funds ("SLFRF") program. This program is intended to provide support to State, territorial, local, and Tribal governments in responding to the economic and public health impacts of COVID-19 and in their efforts to contain impacts on their communities, residents, and businesses.

The City of Santa Fe's plan to deploy the $15,049,631 in ARPA grant funding allocated by the U.S. Department of Treasury is to guide resources to families, job seekers, non-profits and businesses in Santa Fe in order to build a strong, resilient, and equitable recovery. For Santa Fe, the funding provided with the federal ARPA will be transformational in addressing the social and economic challenges exacerbated during the pandemic. The ARPA projects described below are consistent with the ARPA requirements and the funds must be spent by the end of calendar year 2024.

The City of Santa Fe will be one of hundreds of American municipalities receiving funds from the ARPA. To expend these funds in an equitable, just, and community-driven fashion, the City of Santa Fe commissioned a community engagement data collection effort to better understand the needs of Santa Fe residents. Respondents were asked to indicate the categories of City services that they felt should receive the most attention as the City determined the allocation of ARPA funding over the course of the next three years. Community Health and Safety, Children and Youth Support Services, and Economic Health were the three areas that respondents felt needed the most funding allocation.

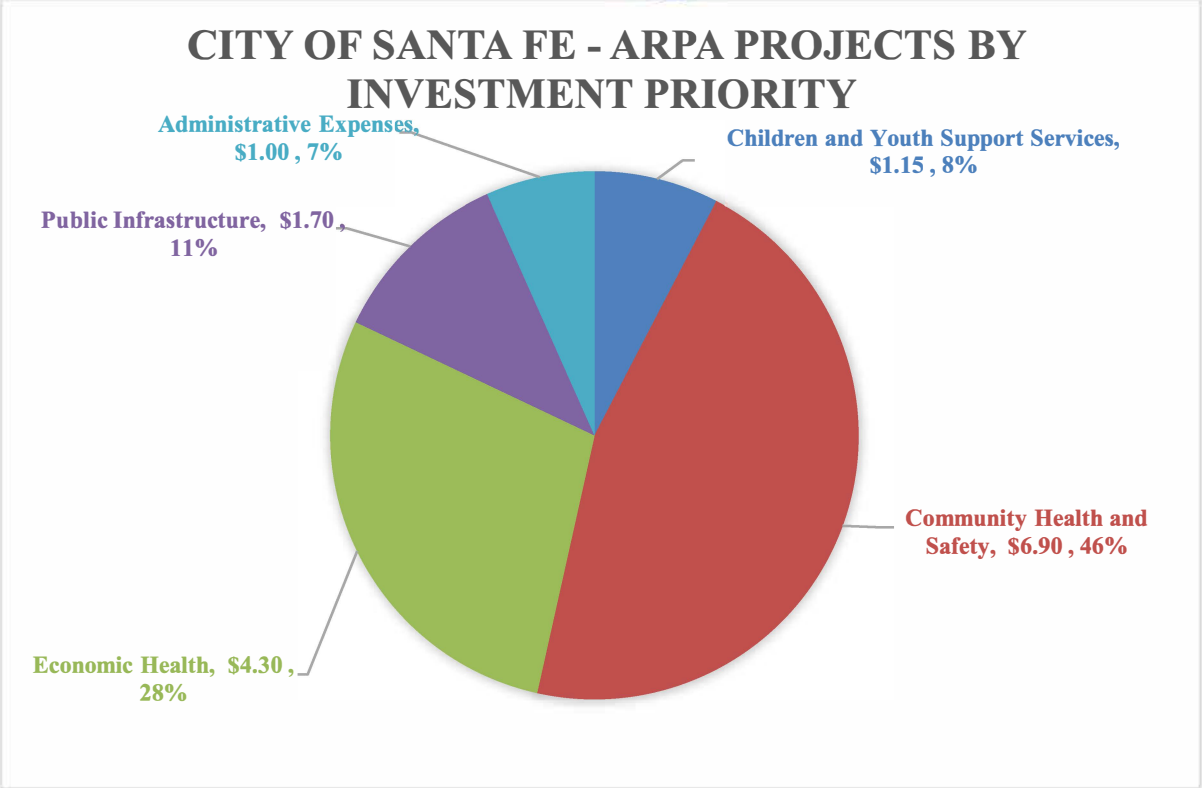

The City's plan allocates almost half of the City's ARPA funds, or $6.9 million, or 45.9% to address the community health and safety including expanding guaranteed income programs, support for community mental health, piloting a community cash assistance program, providing solutions for unsheltered homelessness, continuing operations of the Midtown Emergency Homeless Shelter, providing additional support for affordable housing, assistance for vulnerable populations in Santa Fe; COVID-19 safe retrofits for City facilities, and continued purchases of personal protective equipment to mitigate the spread of COVID-19.

The City's plan allocates $4.3 million, or 28.6%, to Economic Health including support for small businesses, job training programs, and direct support to non-profits. The City's plan allocates $1.15, or 7.6%, to Children and Youth Support services including expanding childcare capacity and the creation of a college and career youth work corps. The City will allocate $1.7 million, or 11.3%, to fund public infrastructure investments including, public Wi-Fi and parks and trails improvements.

The City will use 6.6%, or just under $1 million, to fund administrative expenses in managing the $15 million grant. The City Attorney's Office has reviewed these expenditures and determined that they are legally permissible for projects that apply the federal rule's limitations and reporting requirements. Below is summary of the proposed projects broken out by investment priority. Descriptions on each of the projects follows.

No.	Investment Priority	Project Title	ARPA Amount
1	Children and Youth Support Services	Early Childcare Job Development/ Navigation and Community Resiliency Pilot	$ 900,000
2	Children and Youth Support Services	College & Career Youth Workforce Corps	$ 250,000
3	Community Health and Safety	Guaranteed Income Expansion/Community Cash Assistance Pilot	$ 1,500,000
4	Community Health and Safety	Solutions for Unsheltered Homelessness	$ 1,000,000
5	Community Health and Safety	Midtown Emergency Shelter Services	$ 600,000
6	Community Health and Safety	Affordable Housing Support- Lamplighter Inn Conversion	$ 2,000,000
7	Community Health and Safety	Assistance for Vulnerable Populations	$ 150,000
8	Community Health and Safety	Behavioral Health and Community Violence Intervention Services	$ 1,000,000
9	Community Health and Safety	COVID-Safe Retrofits for City Facilities	$ 500,000
10	Community Health and Safety	PPE and Supplies for COVID Mitigation	$ 150,000
11	Economic Health	Small Business Support	$ 2,500,000
12	Economic Health	Job Training	$ 1,200,000
13	Economic Health	Non-profit Operational Support	$ 600,000
14	Public Infrastructure	Public Wi-Fi Project - Phase 2	$ 400,000
15	Public Infrastructure	Parks and Trails Improvements	$ 1,300,000
16	Administrative Expenses	Administrative Expense	$ 999,631
		Total	$ 15,049,631

Schedule:
Finance Committee: 4/26/2022
Governing Body: 4/27/2022

Funding Source:

The source of funding is the $15,049,631 from the American Rescue Plan grant.
Fund Name/Number: Multiple, see BAR attached
Munis Org Name/Number: Multiple, see BAR attached
Munis Object Name/Number: Multiple, see BAR attached

Action Requested:
Approval is requested of the FY22 budget adjustment for the ARPA grant.

CITY OF SANTA FE – AMERICAN RESCUE PLAN ACT FUNDING

Project Title: Early Childcare Job Development/Navigation and Community Resiliency Pilot

U.S. Department of Treasury Expenditure Category: 2.10 Assistance to Unemployed or Underemployed Workers

Funding Amount: $900,000

Department: Community Services Department **Department Contact:** Julie Sanchez

Proposal Description:
The Early Childcare Job Development/Navigation and Community Resiliency Pilot will train and develop more childcare workers. The project commits $300,000 per year for three years to subsidize students who will attend the Community College to obtain their credentials to provide much needed childcare services. The approach is to build the pipeline of providers; as students obtain their credentials, they will also be doing a practicum to provide childcare. The proposal includes opportunities for both job training as well as providing childcare.

- Curriculum development – quick certification program
- Cohort navigation/support services
- Training/workshop development
- Internship coordination
- Mentorship/Apprenticeship payments

Proposal Start Date: 5/2022 **Proposal End Date:** 12/2024

Performance Metrics:
- % recruited
- # finishing the program
- % entering the workforce

What City of Santa Fe constituents will be affected by this initiative/project?
Future and current childcare providers

CITY OF SANTA FE – AMERICAN RESCUE PLAN ACT FUNDING

Project Title: Guaranteed Income Expansion/Community Cash Assistance Pilot

U.S. Department of Treasury Expenditure Category: 2.3 Household Assistance: Cash Transfers

Funding Amount: $1,500,000

Department: Community Services Department **Department Contact:** Julie Sanchez

Proposal Description:
The program will continue with a partial second year of funding for current Guaranteed Income students (additional resources will come from other funding). The program will also add a second cohort of a mix of one-time cash assistance payments and on-going (short term) cash assistance to eligible community members utilizing the CONNECT network of navigators.

Proposal Start Date: 5/2022 **Proposal End Date:** 12/2024

Performance Metrics:
Recipients will be asked to respond to the following:
a. What impacted and/or disproportionally Impacted population does this project primarily serve? Please select the population primarily served.
b. If this project primarily serves more than one impacted and/or disproportionately impacted population, please select up to two additional populations served.

Recipients will select from the following options:

- Low-income households and populations
- Households and populations residing in Qualified Census Tracts
- Households that qualify for certain federal programs
- Households receiving services provided by Tribal governments
- Households residing in the U.S. territories or receiving services from these governments

What City of Santa Fe constituents will be affected by this initiative/project?
Community members that continue to be financially impacted by the pandemic.

CITY OF SANTA FE – AMERICAN RESCUE PLAN ACT FUNDING

Project Title: Solutions for Unsheltered Homelessness

U.S. Department of Treasury Expenditure Category: 2.18 Housing Support: Other Housing Assistance

Funding Amount: $1,000,000

Department: Community Services Department **Department Contact:** Julie Sanchez

Proposal Description:

- Contract services for encampment clean up
- Contract services for nonprofit service providers to house unsheltered people and provide services at campsites
- Contract services for portable toilets

Proposal Start Date: 5/2022 **Proposal End Date:** 12/2024

Performance Metrics:

- # served
- # transitioned in permanent housing
- # arrests
- # constituent complaints

What City of Santa Fe constituents will be affected by this initiative/project?
Unsheltered individuals, neighborhoods, waterways, Police and Fire services

CITY OF SANTA FE – AMERICAN RESCUE PLAN ACT FUNDING

Project Title: Midtown Emergency Shelter Services

U.S. Department of Treasury Expenditure Category: 2.16 Long-term Housing Security: Services for Unhoused Persons

Funding Amount: $600,000

Department: Affordable Housing **Department Contact:** Alexandra Ladd

Proposal Description:
The Midtown Emergency Shelter operated by Consuelo's Place provides emergency shelter and services to people experiencing homelessness including unsheltered individuals that test positive for COVID-19. The shelter is staffed 24/7, providing meals, hygiene services, case management. The shelter has the capacity to serve 50+ individuals at any single time and is integrated with the City's Code Blue response.

Proposal Start Date: 5/2022 **Proposal End Date:** 12/2024

Performance Metrics:

- # individuals served
- # individuals placed in long-term housing
- # individuals served w/covid
- # homeless hospitalizations

What City of Santa Fe constituents will be affected by this initiative/project?
Unsheltered individuals

CITY OF SANTA FE – AMERICAN RESCUE PLAN ACT FUNDING

Project Title: Affordable Housing Support - Lamplighter Inn Conversion

U.S. Department of Treasury Expenditure Category: 2.16 Long-term Housing Security: Services for Unhoused Persons

Funding Amount: $2,000,000

Department: Affordable Housing **Department Contact:** Alexandra Ladd

Proposal Description:
Funds will be used to offset purchase costs and predevelopment costs for purchase/conversion of the Lamplighter Inn (2405 Cerrillos Rd) into permanent affordable rental housing, with 25% of units set aside for "special needs" renters. Public health outcomes are directly improved by housing vulnerable people and providing necessary health care and social services. Purchasing this property enables the long-term implementation of a supportive housing model that the City piloted through its operations at the Midtown Property (formerly Santa Fe University of Art and Design) and further supported at the Santa Fe Suites. This project ensures that people currently housed during the pandemic will have a longer-term housing option when the City's Midtown Shelter is phased out. High wait lists at the Midtown Emergency Homeless Shelter and Santa Fe Suites indicate continuing demand for deeply affordable rental housing, in addition to opportunities for workforce renters priced out of Santa Fe's market.

Proposal Start Date: 5/2022 **Proposal End Date:** 12/2024

Performance Metrics:

- # of ""special needs"" renters housed at property - # of tenant-based voucher holders housed at property
- duration of occupancy (longer terms means higher rate of stabilization for ""special needs"" renters)
- # of workforce renters able to ""move up"" to market rate rental or homeownership after stabilizing financial situation because living at project eases housing cost burden

What City of Santa Fe constituents will be affected by this initiative/project?
This project will make available affordable workforce rental units as well as deeply affordable supportive units for special needs renters.

CITY OF SANTA FE – AMERICAN RESCUE PLAN ACT FUNDING

Project Title: Public WiFi Project - Phase 2

U.S. Department of Treasury Expenditure Category: 2.4 Household Assistance: Internet Access Programs

Funding Amount: $400,000

Department: Economic Development Department

Department Contact: Rich Brown

Proposal Description:
Build and manage public WiFi infrastructure in economically distressed, high-density southside and midtown communities who will need support to cross the digital divide. This project is a key element for bridging the digital divide for many students, adults and families who are still struggling through the ongoing negative economic impacts of the COVID-19 pandemic.

Proposal Start Date: 5/2022 **Proposal End Date:** 6/2024

Performance Metrics:

- Installation and launch in eight, southside mobile home parks by end of year 2023
- Installation and launch in three midtown high-density housing locations by end of year 2024

What City of Santa Fe constituents will be affected by this initiative/project?
Residents of our high poverty/un and under-employed and high-density communities.

CITY OF SANTA FE – AMERICAN RESCUE PLAN ACT FUNDING

Project Title: Assistance for Vulnerable Populations

U.S. Department of Treasury Expenditure Category: 2.18 Housing Support: Other Housing Assistance

Funding Amount: $150,000

Department: Emergency Management and Safety Department **Department Contact:** Brian Williams

Proposal Description:
The Emergency Management and Safety Department will provide other departments with equipment and supplies needed to reduce the risk to vulnerable populations. This would include sleeping bags, tents and other essential supplies needed to reduce the risk of exposure and other hazards to vulnerable populations within the City.

Proposal Start Date: 5/2022 **Proposal End Date:** 12/2024

Performance Metrics:

- # of persons served

What City of Santa Fe constituents will be affected by this initiative/project?
Vulnerable populations in Santa Fe.

CITY OF SANTA FE – AMERICAN RESCUE PLAN ACT FUNDING

Project Title: Small Business Support

U.S. Department of Treasury Expenditure Category: 2.30 Technical Assistance, Counseling, or Business Planning

Funding Amount: $2,500,000

Department: Economic Development Department **Department Contact:** Rich Brown

Proposal Description:
Working with Santa Fe County, local foundations, local business advisory organizations and the North Central New Mexico COG, a variety of business recovery programs are being considered, including:

- An Economic Security & Opportunities grant program that supports nonprofits that provide career counseling and other services to attain employment; re-engage disconnected youth in paths for jobs; provide job training to low-wage earners to advance their skills; provide finance literacy training and foster the ability to save for and invest in future economic success; and/or provide opportunities to explore career paths, attain internships or apprenticeships, and enter a career with the skills to succeed.
- A Small Business Technical Advisory program that will engage navigators and our ecosystem partners to set up access and resources for small businesses affected by the COVID-19 economic recession. This would include a full roster of webinars, personal consultation and data collection targeted to small businesses that are still finding the right path to sustainable growth.
- A unique program concept that helps bridge the capital gap faced by many business owners by providing no-to-low interest rate small business loans in addition to training and consulting services; including access to loan programs that are targeted to Women, Black, Indigenous, People of Color (BIPOC), Immigrants, Refugees, and low-wealth New Mexicans.
- An investment in a technical support and information fund that also provides a small infusion of capital ($500- $3,000) to help businesses affected by the COVID pandemic diversify, sustain, or grow revenue, leverage other investments, and put systems in place that lead to growth and more job opportunities.
- Collaborate with the COG to support a simple and straightforward 'Working Now Loans' of up to $25,000 that would be available to help small businesses affected by the pandemic with expenses like payroll, rent, marketing, inventory, ecommerce development, personal protective equipment, and small capital improvements.

Proposal Start Date: 5/2022 **Proposal End Date:** 12/2024

Performance Metrics:

- # of small businesses enrolled

- # of small businesses that report growth
- # of small businesses that increase employment
- # of business support programs that proposed
- % of businesses from economically-distressed census tracts
- Number of workers enrolled in sectoral job training programs
- Number of workers completing sectoral job training programs
- Number of people participating in summer youth employment programs

What City of Santa Fe constituents will be affected by this initiative/project?
Small Businesses, non-profit business advisory services

CITY OF SANTA FE – AMERICAN RESCUE PLAN ACT FUNDING

Project Title: Job Training

U.S. Department of Treasury Expenditure Category: 2.10 Assistance to Unemployed or Underemployed Workers

Funding Amount: $1,200,000

Department: Economic Development Department **Department Contact:** Rich Brown

Proposal Description:
Bright Future Job Training Program - $600,000 to fund the Bright Future Job Training Program. Working with the SF Community College, the Bright Future Jobs Training Program will create and support jobs training and economic mobility in the broadband, clean energy, construction, trades and computer coding industries for our unemployed and pivot-career workers.

Build Back Better Business & Workforce Project (BBBBWP) - $600,000 to fund the Build Back Better Business & Workforce Project to work with a host of local partners in the job training and workforce development ecosystem in Santa Fe. With a strong reliance on tourism, Santa Fe's economy was especially vulnerable to the economic fallout from COVID-19. Unemployment still remains high as we enter year three of the pandemic. As Santa Fe builds back, this initiative will build and expand upon proven programming and approaches to simultaneously help people get back to work, while supporting a more vibrant and diverse economy as Santa Fe builds back. Partner organizations will deliver entrepreneur and small business with programming and materials available in both English and Spanish.

Proposal Start Date: 5/2022 **Proposal End Date:** 12/2024

Performance Metrics:
Bright Future Job Training Program - Enroll at least 30 cohort per program, place at least 50% of graduates in local careers, involve at least one local business to provide matching funds or employment track, provide a two-year employment opportunity; template one program into a new industry cluster.

Build Back Better Business & Workforce Project - Libraries as Launchpads project: Four rounds of Launchpads in Spanish, two rounds in English; Total of 90 entrepreneurs "accelerated"; four community centers and/or libraries activated. Recovery Corps Internships project: 10 interns per year and 5 private sector companies as hosts = 30 interns placed. Digital Divide Workshops Project: Two in Spanish, two in English per year, 10 business owners in each = 160 served

What City of Santa Fe constituents will be affected by this initiative/project?
Bright Future Job Training Program -Veterans, post-high school graduates, essential workers looking for new career opportunities, etc.

Build Back Better Business & Workforce Project – Unemployed, underserved and underemployed Santa Feans looking for opportunities for new job training.

CITY OF SANTA FE – AMERICAN RESCUE PLAN ACT FUNDING

Project Title: College & Career Youth Workforce Corps

U.S. Department of Treasury Expenditure Category: 2.10 Assistance to Unemployed or Underemployed Workers

Funding Amount: $250,000

Department: Economic Development Department **Department Contact:** Rich Brown

Proposal Description:
In partnership with the Santa Fe Public Schools, the City will create a College & Career Youth Corps program. The Corps is a professional development, paid summer internship program for youth interested in arts-based, trades and diversified industries leadership opportunities. Interested rising high school juniors, seniors and recent graduates living in the Santa Fe will be eligible to apply. The College & Career Youth Corps strives to provide Santa Fe's youth a safe and meaningful opportunity to develop their skills, build a professional network, and prepare for the future.

Proposal Start Date: 5/2022 **Proposal End Date:** 12/2024

Performance Metrics:

- Reach and enroll 60 local youth
- Focus on job training & career development in three industries (arts, technical trades, computer coding)
- Provide opportunities for at least 50% of cohort to achieve full time employment

What City of Santa Fe constituents will be affected by this initiative/project?
Local Santa Fe Youth

CITY OF SANTA FE – AMERICAN RESCUE PLAN ACT FUNDING

Project Title: Non-profit Operational Support

U.S. Department of Treasury Expenditure Category: 2.34 Assistance to Impacted Nonprofit Organizations

Funding Amount: $600,000

Department: Community Services Department **Department Contact:** Julie Sanchez

Proposal Description:
Operational support to nonprofits providing vital community services that have been financially impacted by the COVID-19 pandemic. A Request for Applications will be released targeted to non-profits that provide assistance to those disproportionately impacted by the COVID-19 pandemic and which have themselves been financially impacted by the COVID-19 pandemic. A review panel from within Community Health and Safety, as well as committee members, will rank the proposals; the organizations will be assessed financially as to financial need and ability to serve target populations. The primary mission of the organization must be to provide one of the following vital public services to indigent populations: access to food, access to affordable housing, case management, addressing homelessness, personal safety and domestic violence, providing essential utilities (gas, water, electricity), transportation, behavioral health and grief crisis services, and/or medical/dental services. In order to be eligible for funding the contracted agency must have the following requirements met:

A. Received 501(c)(3) status on or before December 31, 2018 and has no part of its net earnings inuring to the benefit of any member, founder, contributor, or individual OR began providing a vital public service on or before December 31, 2018 and had a fiscal sponsor that is a registered nonprofit or foundation; and

B. Primarily serve City of Santa Fe residents who are considered indigent; and

C. The primary mission of the organization must be to provide one of the following vital public services to indigent populations: access to food, access to affordable housing, case management, addressing homelessness, personal safety and domestic violence, providing essential utilities (gas, water, electricity), transportation, behavioral health and grief crisis services, and/or medical/dental services; and

D. Has been negatively impacted by the pandemic, either through a loss of operating income or an increase in demand for services. Organizations must prove that they have lost at least 10% of their operating income (comparing the last audited financial statements for the fiscal year ended on or before January 1, 2020 to the most recent completed fiscal year) OR has had at least a 10% unfunded increase in direct service expenses related to providing vital public services related to the pandemic which lead to a budget shortfall (comparing the last audited financial statements for the fiscal year ended on or before January 1, 2020 to the most recent completed fiscal year) OR a 10% decrease in net operating income (comparing the last audited financial statements for the fiscal year ended on or before January 1, 2020 to the most recent completed fiscal year).; and

E. Had the equivalent of at least 2 FTE as of January 1, 2020.

F. Organizations that are at risk of significantly reducing services or permanent/temporary closure (going concern) will be prioritized when funding decisions are made.

Proposal Start Date: 5/2022 **Proposal End Date:** 12/2024

Performance Metrics:

- # nonprofits served
- Increase in capacity
- Increase in services
- Increase in clients served

What City of Santa Fe constituents will be affected by this initiative/project?
Santa Fe residents who are considered indigent that are served by non-profit organizations which were, like their clients, financially impacted by COVID.

CITY OF SANTA FE – AMERICAN RESCUE PLAN ACT FUNDING

Project Title: Behavioral Health and Community Violence Intervention Services

U.S. Department of Treasury Expenditure Category: 1.11 Community Violence Interventions

Funding Amount: $1,000,000

Department: Community Services Department **Department Contact:** Julie Sanchez

Proposal Description:
The Behavioral Health and Community Violence Intervention Services initiative will detect, track and intervene in community violence. Build resiliency in communities through collaborative efforts with the Santa Fe Police Department in training, education, advocacy and peer navigation services; building capacity and training with Santa Fe Fire Departments Alternative Response Unit. Investment in peer navigation services—training for people who have experienced behavioral health problems to be employed as case managers and mentors. These peer navigators assist efforts to reach and support communities impacted by COVID. An RFA would solicit proposals. The project would support organizations to implement evidence-based violence prevention programs and expand their capacity by allowing them to train and employ qualified navigators. This builds on work currently underway to interrupt or provide remedial support for youth violence prevention.

Proposal Start Date: 5/2022 **Proposal End Date:** 12/2024

Performance Metrics:

- Individuals served, both in becoming peer navigators and by peer navigators
- Increase in protective factors for young people at risk for violence
- Reduction in community violence
- # of activities

What City of Santa Fe constituents will be affected by this initiative/project?
Community members, especially young people, who have been in a mental health crisis and/or experience trauma related to violence.

CITY OF SANTA FE – AMERICAN RESCUE PLAN ACT FUNDING

Project Title: COVID-Safe Retrofits for City Facilities

U.S. Department of Treasury Expenditure Category: 1.14 Capital Investments or Physical Plant Changes to Public Facilities that respond to the COVID-19 public health emergency

Funding Amount: $500,000

Department: Public Works Department **Department Contact:** Regina Wheeler

Proposal Description:
Ensuring the highest-quality indoor air is a direct link to public health and can help limit airborne illness. This program provides a level of disease prevention. The capital investment projects include City-wide COVID health and safety retrofits in City facilities. See itemized list below:

- Replacement MERV13 Filters for city facilities. All city facilities now use high performance MERV13 and they have to be replaced 3 times as often as lower performance filters.
- Additional air filtration unit for Council Chambers.
- Replacement filters for portable air filtration units.
- Cubicle enhancements and other office covid safety improvements.

Proposal Start Date: 5/2022 **Proposal End Date:** 12/2024

Performance Metrics:

- Project milestones and deliverables completed on time and on budget

What City of Santa Fe constituents will be affected by this initiative/project?
City of Santa Fe staff and residents

CITY OF SANTA FE – AMERICAN RESCUE PLAN ACT FUNDING

Project Title: Parks and Trails Improvements

U.S. Department of Treasury Expenditure Category: 1.14, Capital Investments or Physical Plant Changes to Public Facilities that respond to the COVID-19 public health emergency

Funding Amount: $1,300,000

Department: Public Works Department **Department Contact:** Melissa McDonald

Proposal Description:
Outdoor activity during the pandemic helped decrease the transmission of COVID-19 and other infectious diseases. Encouragement from governments to stay outside during the COVID-19 pandemic increased usage in City of Santa Fe parks and open spaces such as the City's trail system. The capital investment projects include City-wide COVID health and safety measures in the City's parks and trails. Funds will be used to renovate one baseball field at Ragle Park on West Zia Road at Yucca to improve play and conserve water. Funds will also be used to repair trails and park equipment.

Proposal Start Date: 5/2022 **Proposal End Date:** 12/2024

Performance Metrics:

- Project milestones and deliverables completed on time and on budget

What City of Santa Fe constituents will be affected by this initiative/project?
City of Santa Fe residents, visitors and staff

CITY OF SANTA FE – AMERICAN RESCUE PLAN ACT FUNDING

Project Title: Citywide personal protective equipment and supplies for COVID Mitigation

U.S. Department of Treasury Expenditure Category: 1.5 Personal Protective Equipment

Funding Amount: $150,000

Department: Emergency Management and Safety Department **Department Contact:** Brian Williams

Proposal Description:
The Office of Emergency Management and the Safety Office will coordinate with City departments and private non-profits to support the need for personal protective equipment, operating supplies such as hand sanitizing stations and other measures to mitigate COVID-19 throughout the City.

Proposal Start Date: 5/2022 **Proposal End Date:** 12/2024

Performance Metrics:

- Total number of locations offering PPE.
- Number of locations is areas with high Social Vulnerability Index.
- Volume of distribution as a percentage of available supply.

What City of Santa Fe constituents will be affected by this initiative/project?
This project will impact all residents and visitors who seek assistance, as well as all City employees.

CITY OF SANTA FE – AMERICAN RESCUE PLAN ACT FUNDING

Project Title: Financial Reporting and Procurement

U.S. Treasury Department Expenditure Category: 7.1 Administrative Expenses

Funding Amount: $999,631

Department: Finance Department **Department Contact:** Mary McCoy

Proposal Description:
The City will use these funds for administering the $15 million grant award from the U.S. Department of the Treasury, including costs of consultants to support effective management and oversight, including consultation for ensuring compliance with legal, regulatory, and other requirements. The ARPA guidance outlines that recipients may use up to 10% of the modified total direct costs for administrative expenses. The City is electing to allocate 6.6% to administrative expenses to ensure full compliance with all federal, state, and local laws in order to limit any subsequent audits and reviews. The purpose of hiring a contractor(s) to focus on compliance is so that the City will not have any disallowed programs and/or expenses or face any claw-backs. The consultants will work together with City Departments and the Finance Department and will

- Assist the City in developing appropriate policies and procedures for use of ARPA funds;
- Ensure that the ARPA programs comply with requirements, terms and conditions of the award;
- Process the procurement of ARPA projects according to the City's procurement code;
- Complete the required financial reporting in a timely and accurate manner to the U.S. Department of the Treasury;
- Establish a central ARPA electronic file to maintain guidance and reporting
- Compile documentation to support eligibility of each program;
- Assist with the implementation of the program objectives, such as contract support for a project;
- Establish a dashboard update of each ARPA project, encumbered, spent and remaining amount to assist with managing projects and preparing expenditure reports.

Proposal Start Date: 5/2022 **Proposal End Date:** 12/2024

Performance Metrics:

- # of reports submitted on time, # of reports submitted on accurately

What City of Santa Fe constituents will be affected by this initiative/project?
Taxpayers, Internal Staff

Log # *{Finance use only}*:	
Journal # *{Finance use only}*:	

City of Santa Fe, New Mexico
BUDGET AMENDMENT RESOLUTION (BAR)

DEPARTMENT / DIVISION NAME	DATE
Community Development/Community Health & Safety/Public Works/Finance	4/18/2022

ITEM DESCRIPTION	ORG	OBJECT	PROJECT	INCREASE	DECREASE
EXPENDITURES				*{enter as positive #}*	*{enter as negative #}*
Community Services / Human Services / Grants & Services - Early Childcare Job Development	2400122	510400	COM222400A	900,000	
Community Services / Human Services / Grants & Services - Guaranteed Income Expansion	2400122	510400	COM222400B	1,500,000	
Community Services / Human Services / Grants & Services - Solutions for Unsheltered Homelessness	2400122	510400	COM222400C	1,000,000	
Affordable Housing / Housing & Comm Dev Programs / Grants & Services - Midtown Emergency Homeless Shelter	2402750	510400	AFH222400B	600,000	
Housing & Comm Dev Programs / Grants & Services - Affordable Housing/Lamplighter Inn Conversion	2402750	510400	AFH222400A	2,000,000	
Economic Development / Comm Dev Grants / Other Consulting - Public WiFi Project Phase 2	2402800	510340	ECD222400A	400,000	
Emergency Management / Comm Dev Grants / Operating Supplies - Assistance for Vulnerable Populations	2402850	530200	EMR222400A	150,000	
Economic Development / Comm Dev Grants / Grants & Services - Small Business Support	2402800	510400	ECD222400B	2,500,000	
Economic Development / Comm Dev Grants / Other Consulting - Job Training	2402800	510340	ECD222400C	1,200,000	
REVENUES				*{enter as negative #}*	*{enter as positive #}*
Community Services / Human Services / US Treasury ARPA Grant - Early Childcare Job Development	2400122	490615	COM222400A	(900,000)	
Community Services / Human Services / US Treasury ARPA Grant - Guaranteed Income Expansion	2400122	490615	COM222400B	(1,500,000)	
Community Services / Human Services / US Treasury ARPA Grant - Solutions for Unsheltered Homelessness	2400122	490615	COM222400C	(1,000,000)	
Housing & Comm Dev Programs / US Treasury ARPA Grant - Midtown Emergency Homeless Shelter	2402750	490615	AFH222400B	(600,000)	
Housing & Comm Dev Programs / US Treasury ARPA Grant - Affordable Housing/Lamplighter Inn Conversion	2402750	490615	AFH222400A	(2,000,000)	
Economic Development / Comm Dev Grants / US Treasury ARPA Grant - Public WiFi Project Phase 2	2402800	490615	ECD222400A	(400,000)	
Emergency Management / Comm Dev Grants / US Treasury ARPA Grant - Assistance for Vulnerable Populations	2402850	490615	EMR222400A	(150,000)	
Economic Development / Comm Dev Grants / US Treasury ARPA Grant - Small Business Support	2402800	490615	ECD222400B	(2,500,000)	
Economic Development / Comm Dev Grants / US Treasury ARPA Grant - Job Training	2402800	490615	ECD222400C	(1,200,000)	
				$ -	$ -

JUSTIFICATION: *(use additional page if needed)*
--Attach supporting documentation/memo

Appropriation of American Rescue Plan (ARPA) Grants for various purposes - see attached memo and documentation.

[BAR p. 1 of 2]

{Complete section below if BAR results in a net change to ANY Fund}	
Fund(s) Affected	Fund Balance Increase/(Decrease)
TOTAL:	0

Andy Hopkins — 4/18/2022
Prepared By *{print name}* — Date

N/A
Division Director Signature *{optional}* — Date

Mary McCoy
Department Director Signature — Date

{Use this form for Finance Committee/ City Council agenda items ONLY}

CITY COUNCIL APPROVAL

City Council Approval Date

Agenda Item #:

Alexis Lotero
Alexis Lotero (Apr 22, 2022 13:49 MDT)
Budget Officer — Date

N/A
Finance Director *{≤ $5,000}* — Date

N/A
City Manager *{≤ $60,000}* — Date

Log # *{Finance use only}*:	*[see BAR p. 1 for log/journal]*
Journal # *{Finance use only}*:	*[see BAR p. 1 for log/journal]*

City of Santa Fe, New Mexico
BUDGET AMENDMENT RESOLUTION (BAR)

DEPARTMENT / DIVISION NAME	DATE
Community Development/Community Health & Safety/Public Works/Finance	4/18/2022

ITEM DESCRIPTION	ORG	OBJECT	PROJECT	INCREASE	DECREASE
EXPENDITURES				*{enter as positive #}*	*{enter as negative #}*
Economic Development / Comm Dev Grants / Other Consulting - College & Career Youth Workforce Corps	2402800	510340	ECD222400D	250,000	
Community Services / Human Services / Grants & Services - Direct Support for Non-Profits	2400122	510400	COM222400F	600,000	
Community Services / Human Services / Grants & Services - Behavioral Health & Community Violence Intervention Svcs	2400122	510400	COM222400G	1,000,000	
Public Works / Facilities / Comm Dev Grants / Furniture & Fixtures - COVID-Safe Retrofits for City Facilities	2400431	570600	PWD222400A	500,000	
Public Works / Parks Division / Comm Dev Grants / WIP Construction - Parks and Trails Improvements	2404150	572970	PWD222400B	1,300,000	
Emergency Management / Comm Dev Grants / Operating Supplies - Citywide PPE and Supplies for COVID Mitigation	2402850	530200	EMR222400B	150,000	
Finance / Comm Dev Grants / Professional Contracts - Administrative Expense	2401501	510300	FIN222400A	999,631	
REVENUES				*{enter as negative #}*	*{enter as positive #}*
Economic Development / Comm Dev Grants / US Treasury ARPA Grant - College & Career Youth Workforce Corps	2402800	490615	ECD222400D	(250,000)	
Community Services / Human Services / US Treasury ARPA Grant - Direct Support for Non-Profits	2400122	490615	COM222400F	(600,000)	
Community Services / Human Services / US Treasury ARPA Grant - Behavioral Health & Community Violence Intervention	2400122	490615	COM222400G	(1,000,000)	
Public Works / Facilities / Comm Dev Grants / US Treasury ARPA Grant - COVID-Safe Retrofits for City Facilities	2400431	490615	PWD222400A	(500,000)	
Public Works / Parks Division / Comm Dev Grants / US Treasury ARPA Grant - Parks and Trails Improvements	2404150	490615	PWD222400B	(1,300,000)	
Emergency Management / US Treasury ARPA Grant - Citywide PPE and Supplies for COVID Mitigation	2402850	490615	EMR222400B	(150,000)	
Finance / Comm Dev Grants / US Treasury ARPA Grant - Administrative Expense	2401501	490615	FIN222400A	(999,631)	
				$ -	$ -

JUSTIFICATION: *(use additional page if needed)*
--Attach supporting documentation/memo

Appropriation of American Rescue Plan (ARPA) Grants for various purposes - see attached memo and documentation.

[BAR p. 2 of 2]

{Complete section below if BAR results in a net change to ANY Fund}	
Fund(s) Affected	Fund Balance Increase/(Decrease)
TOTAL:	0

Andy Hopkins — Prepared By *{print name}* — 4/18/2022 Date

N/A — Division Director Signature *{optional}* — Date

[see BAR p. 1 for signatures] — Department Director Signature — Date

{Use this form for Finance Committee/ City Council agenda items ONLY}

CITY COUNCIL APPROVAL

City Council Approval Date

Agenda Item #:

[see BAR p. 1 for signatures] — Budget Officer — Date

N/A — Finance Director *{≤ $5,000}* — Date

N/A — City Manager *{≤ $60,000}* — Date

Item# 23-0700
Munis Contract# 3204464

RECOVERY FUNDS SUBRECIPIENT
CONTRACT BETWEEN CITY OF SANTA FE AND THE LIFE LINK
FOR SERVICES

THIS AGREEMENT is made and entered into by and between the City of Santa Fe, herein after referred to as the "City", and **The Life Link** herein after referred to as the "Contractor."

RECITALS

WHEREAS, the City, as a recipient of a State and Local Fiscal Recovery Funds (SLFRF) award, has substantial discretion to use the award funds in the ways that best suit the needs of the City if such use fits into one of the following four statutory categories:

1. To respond to the COVID-19 public health emergency or its negative economic impacts;
2. To respond to workers performing essential work during the COVID-19 public health emergency by providing premium pay to eligible workers of the recipient that are performing such essential work, or by providing grants to eligible employers that have eligible workers who perform essential work;
3. For the provision of government services, to the extent of the reduction in revenue of such recipient due to the COVID–19 public health emergency, relative to revenues collected in the most recent full fiscal year of the recipient prior to the emergency; or
4. To make necessary investments in water, sewer, or broadband infrastructure;

WHEREAS this Contract falls within the **first** statutory category;

WHEREAS, recipients are responsible for ensuring that any procurement using SLFRF funds, or payments under procurement contracts using such funds, Coronavirus State and Local Fiscal Recovery Funds Compliance and Reporting Guidance are consistent with the procurement standards set forth in the Uniform Guidance at 2 CFR 200.317 through 2 CFR 200.327, as applicable;

WHEREAS, the Uniform Guidance establishes in 2 CFR 200.319 that all procurement transactions for property or services must be conducted in a manner providing full and open competition, consistent with standards outlined in 2 CFR 200.320, which allows for non-competitive procurements only in circumstances where at least one of the conditions below is true: the item is below the micro-purchase threshold; the item is only available from a single source; the public exigency or emergency will not permit a delay from publicizing a competitive solicitation; or after solicitation of a number of sources, competition is determined inadequate; and

WHEREAS, Subrecipients under the SLFRF program are entities that receive a subaward from a recipient to carry out the purposes (program or project) of the SLFRF award on behalf of the recipient.

IT IS MUTUALLY AGREED BETWEEN THE PARTIES:

1. **Definitions**

A. "Products and Services Schedule" refers to the complete list of products and services offered under this Agreement and the price for each. Product and service descriptions may be amended with the prior approval of the Agreement Administrator. New products and services shall not be added to the Products and Services Schedule.

B. "Business Hours" means 8:00 a.m. to 5:00 p.m. Mountain Time.

C. "Subrecipient" means an entity, usually but not limited to non–Federal entities, that receives a subaward from a pass-through entity to carry out part of a Federal award; but does not include an individual that is a beneficiary of such award. 2 C.F.R. § 200.1

D. "You" and "your" refers to **The Life Link.** "We," "us" or "our" refers to the City and whose accounts are created under this Agreement.

E. "Good Neighbor Agreement" means a collaborative working agreement created by the site owner, service provider, and neighbors, including, at a minimum, owners and/or occupants of residences and businesses directly across from the SOS on Old Pecos Trail, Arroyo Chamiso Road, and St. Michaels Drive.

2. **Scope of Work**

The contractor agrees to perform the work as follows:

A. Submit to the City, before operations begin, a final draft of policies and procedures which encompass the Safe Outdoor Space (SOS) site rules and operating procedures including:
   a. Day to day operations and services
   b. Application and Selection Process of Applicants
   c. Intake and Participation Agreement
   d. Data Collection
   e. Reasonable Accommodations
   f. Disciplinary Action for Violations against Participation Agreement
   g. Grievance Process
   h. Referral Procedure if the client is asked to leave the program.
   i. Job descriptions for staffing of the SOS.
   j. Good Neighbor Agreement

B. Provide 24/7 staffing to the SOS documented as follows:
   a. Staff on the payroll must be directly involved in the daily operations of the safe outdoor space.
   b. Time sheets and activity reports are required and the number of hours on the payroll must match the timesheets.

c. Activity reports must delineate the activities of daily operations, as outlined in Appendix A. Eligible activities include:
    i. Outreach
    ii. Case Management (goal setting, accessing basic needs, referrals to outside services, transportation to appointments)
    iii. Housing Navigation (voucher applications, apartment showings, housing applications, housing assessments, rental assistance)
    iv. Assessment (VI-SPDAT, Treat First, DLA)
    v. Administration (contract management, staffing)
    vi. Life Skills Training (DLA activities)
    vii. Employment (supportive employment, job applications, resume building, social security applications if employment is not an option)
    viii. Security

C. Provide services including emergency shelter, case management, housing navigation, assessment, skills training, employment, and security.
D. Use CONNECT/Unite Us for Case Management referrals.
E. Serve a minimum of 40 unsheltered adult households in the first year of operations.
F. Participate in the NM Coordinated Entry System (CES), Community Case Conferencing, HMIS and Quality Data Improvement, managed by the New Mexico Coalition to End Homelessness (NMCEH).
    a. Ensure all staff are trained in completing the VI-SPDAT and navigating the CES.
    b. Ensure, at minimum, case management staff are licensed and trained in HMIS.
    c. Complete a VI-SPDAT for every person staying at the SOS.
    d. Participate fully in weekly case conferencing, taking a strong advocacy role to appropriately house individuals from the SOS.
    e. Participate fully in quality improvement activities including outreach, data collection and community collaboration.
G. Report to the city on a quarterly basis on the use of ARPA funds, program outcomes achieved and specifying eligibility of people served using forms provided in Appendix B.
H. Facilitate weekly meetings with the Site Owner to review:
    a. Unit Maintenance
    b. Property Maintenance
    c. Owner, operator, guest, and neighborhood concerns
    d. Coordination of Services
I. Conduct Outreach to identify and engage individuals who are unsheltered and work to assess and refer them to the Safe Outdoor Space as well as added to CES.
J. Provide ongoing training and development to site staff including, but not limited to, trauma-informed care, crisis intervention and de-escalation, housing first and harm reduction practices.

B. Performance measures. The disproportionately impacted population this project will serve are unsheltered homeless individuals who are unable or unwilling to stay in congregate shelters due to fear of contracting COVID 19 and/or the inability/unwillingness to be vaccinated against the virus, which is a requirement for even the lowest barrier shelters.

C. The Life Link understands that this contract represents a subaward of SLFRF funds, agrees to maintain records to satisfy all compliance requirements for use of SLFRF, and agrees to all reporting requirements for expenditures of SLFRF funds.

3. **Compensation**

The City shall pay to the Contractor in full payment for services satisfactorily performed based upon deliverables outlined in the Scope of Work. The total compensation under this Agreement shall not exceed $440,192.00, including New Mexico gross receipts tax. This amount is a maximum and not a guarantee that the work assigned to be performed by Contractor under this Agreement shall equal the amount stated herein. The Parties do not intend for the Contractor to continue to provide Services without compensation when the total compensation amount is reached. Contractor is responsible for notifying the City when the Services provided under this Agreement reach the total compensation amount. In no event will the Contractor be paid for Services provided in excess of the total compensation amount without this Agreement being amended in writing prior to services, in excess of the total compensation amount being provided.

C. Payment shall be made upon acceptance of each Deliverable and upon the receipt and acceptance of a detailed, certified Payment Invoice. Payment will be made to the Contractor's designated mailing address. In accordance with Section 13-1-158 NMSA 1978, the City shall determine if the product or services provided meet specifications. Until the products or services have been accepted in writing by the City, the City shall not pay for any products or services. Unless otherwise agreed upon between the City and the Contractor, within thirty (30) days from the date the City receives written notice from the Contractor that payment is requested for services or within thirty (30) days from the receipt of products, the City shall issue a written certification (by letter or email) of complete or partial acceptance or rejection of the products or services. Unless the City gives notice of rejection within the specified time period, the products or services will be deemed to have been accepted. Payment shall be tendered to the Contractor within thirty (30) days of the date of written certification of acceptance. All Payment Invoices MUST BE received by the City no later than fifteen (15) days after the termination of this Agreement. Payment Invoices received after such date WILL NOT BE PAID.

D. Retainage. Not Applicable – The Parties agree there is no retainage.

E. Performance Bond. Not Applicable. The Parties agree there is no Performance Bond.

F. The contractor may use SLFRF funds to cover eligible costs incurred during the period that begins on March 3, 2021 and ends on December 31, 2024, if the award funds for the obligations incurred by December 31, 2024 are expended by December 31, 2026. Costs for projects incurred by the subrecipient prior to March 3, 2021 are not eligible, as provided for in

Treasury's final rule. Any funds not obligated or expended for eligible uses by the timelines above must be returned to Treasury, including any unobligated or unexpended funds that have been provided to subrecipients and contractors as part of the award closeout process pursuant to 2 C.F.R. 200.344(d).

4. **Term**

THIS AGREEMENT SHALL NOT BECOME EFFECTIVE UNTIL APPROVED IN WRITING BY THE CITY. This Agreement shall begin on date approved by the City and end on December 31st, 2024. In no event will the term exceed the duration allowed by statute, NMSA 1978, § 13-1-150.

5. **Default and Force Majeure**

The City reserves the right to cancel all or any part of any orders placed under this contract without cost to the City, if the Contractor fails to meet the provisions of this contract and, except as otherwise provided herein, to hold the Contractor liable for any excess cost occasioned by the City due to the Contractor's default. The Contractor shall not be liable for any excess costs if failure to perform the order arises out of causes beyond the control and without the fault or negligence of the Contractor; such causes include, but are not restricted to, acts of God or the public enemy, acts of the State or Federal Government, fires, floods, epidemics, quarantine restrictions, strikes, freight embargoes, unusually severe weather and defaults of sub-contractors due to any of the above, unless the City shall determine that the supplies or services to be furnished by the sub-contractor were obtainable from other sources in sufficient time to permit the Contractor to meet the required delivery scheduled. The rights and remedies of the City provided in this paragraph shall not be exclusive and are in addition to any other rights now being provided by law or under this contract.

6. **Termination**

A. Grounds. The City may terminate this Agreement for convenience or cause. For contracts within their authority, the City Manager or their designee is authorized to provide the notice of termination, otherwise such notice of termination shall be provided by the Mayor or their designee as authorized by the Governing Body. The Contractor may only terminate this Agreement based upon the City's uncured, material breach of this Agreement.

B. Notice; City Opportunity to Cure.

1) Except as otherwise provided in Paragraphs 7.A and 17, the City shall give Contractor written notice of termination at least thirty (30) days prior to the intended date of termination.

2) Contractor shall give City written notice of termination at least thirty (30) days prior to the intended date of termination, which notice shall (i) identify all the City's material breaches of this Agreement upon which the termination is based and (ii) state what the City must do to cure such material breaches. Contractor's notice of termination shall only be effective (i) if the City does not cure all material breaches within the thirty (30) day notice period

or (ii) in the case of material breaches that cannot be cured within thirty (30) days, the City does not, within the thirty (30) day notice period, notify the Contractor of its intent to cure and begin with due diligence to cure the material breach.

3) Notwithstanding the foregoing, this Agreement may be terminated immediately upon written notice to the Contractor (i) if the Contractor becomes unable to perform the services contracted for, as determined by the City; (ii) if, during the term of this Agreement, the Contractor is suspended or debarred by the City; or (iii) the Agreement is terminated pursuant to Paragraph 17, "Appropriations", of this Agreement.

C. Liability. Except as otherwise expressly allowed or provided under this Agreement, the City's sole liability upon termination shall be to pay for acceptable work performed prior to the Contractor's receipt or issuance of a notice of termination; provided, however, that a notice of termination shall not nullify or otherwise affect either party's liability for pre-termination defaults under or breaches of this Agreement. The Contractor shall submit an invoice for such work within thirty (30) days of receiving or sending the notice of termination. *THIS PROVISION IS NOT EXCLUSIVE AND DOES NOT WAIVE THE CITY'S OTHER LEGAL RIGHTS AND REMEDIES CAUSED BY THE CONTRACTOR'S DEFAULT/BREACH OF THIS AGREEMENT.*

7. **Amendment**

A. This Agreement shall not be altered, changed or amended except by instrument in writing executed by the parties hereto and all other required signatories.

B. If the City proposes an amendment to the Agreement to unilaterally reduce funding due to budget or other considerations, the Contractor shall, within thirty (30) days of receipt of the proposed Amendment, have the option to terminate the Agreement, pursuant to the termination provisions as set forth in Paragraph 7 herein, or to agree to the reduced funding.

8. **Status of Contractor**

The Contractor, and Contractor's agents and employees, are independent Contractors for the City and are not employees of the City. The Contractor, and Contractor's agents and employees, shall not accrue leave, retirement, insurance, bonding, use of City vehicles, or any other benefits afforded to employees of the City as a result of this Agreement. The Contractor acknowledges that all sums received hereunder are personally reportable by the Contractor for income tax purposes, including without limitation, self-employment tax and business income tax. The Contractor agrees not to purport to bind the City unless the Contractor has written authority to do so, and then only within the strict limits of that authority.

9. **Assignment**

The Contractor shall not assign or transfer any interest in this Agreement or assign any claims for money due or to become due under this Agreement without the prior written approval of the City.

10. **Subcontracting**

The Contractor shall not subcontract any portion of the services to be performed under this Agreement without the prior written approval of the City. No such subcontract shall relieve the primary Contractor from its obligations and liabilities under this Agreement, nor shall any subcontract obligate direct payment from the City.

11. **Non-Collusion**

In signing this Agreement, the Contractor/Contractor certifies the Contractor/Contractor has not, either directly or indirectly, entered into action in restraint of free competitive bidding in connection with this offer submitted to the City.

12. **Inspection of Plant**

The City may inspect, at any reasonable time during Contractor's regular business hours and upon prior written notice, the Contractor's plant or place of business, or any subcontractor's plant or place of business, which is related to the performance of this contract.

13. **Commercial Warranty**

The Contractor agrees that the tangible personal property or services furnished under this Agreement shall be covered by the most favorable commercial warranties the Contractor gives to any customer for such tangible personal property or services, and that the rights and remedies provided herein shall extend to the City and are in addition to and do not limit any rights afforded to the City by any other clause of this order. Contractor agrees not to disclaim warranties of fitness for a particular purpose or merchantability.

14. **Condition of Proposed Items**

Where tangible personal property is a part of this Agreement, all proposed items are to be NEW and of most current production, unless otherwise specified.

15. **Records and Audit**

During the term of this Agreement and for five years thereafter, the Contractor shall maintain detailed records pertaining to the services rendered and products delivered. These records shall be subject to inspection by the City, the State Auditor and other appropriate state and federal authorities. The City shall have the right to audit billings both before and after payment. Payment under this Agreement shall not foreclose the right of the City to recover excessive or illegal payments.

16. **Appropriations**

The terms of this Agreement, and any orders placed under it, are contingent upon sufficient appropriations and authorization being made by the Governing Body for the performance of this Agreement. If sufficient appropriations and authorization are not made by the legislature, this Agreement, and any orders placed under it, shall terminate upon written

notice being given by the City to the Contractor. The City's decision as to whether sufficient appropriations are available shall be accepted by the Contractor and shall be final. If the City proposes an amendment to the Agreement to unilaterally reduce funding, the Contractor shall have the option to terminate the Agreement or to agree to the reduced funding, within thirty (30) days of receipt of the proposed amendment.

17. **Release**

The Contractor, upon final payment of the amount due under this Agreement, releases the City, its officers and employees, from all liabilities, claims and obligations whatsoever arising from or under this Agreement. The Contractor agrees not to purport to bind the City, unless the Contractor has express written authority to do so, and then only within the strict limits of that authority.

18. **Confidentiality**

Any confidential information provided to or developed by the Contractor in the performance of this Agreement shall be kept confidential and shall not be made available to any individual or organization by the Contractor without prior written approval by the City.

19. **Conflict of Interest**

A. The Contractor represents and warrants that it presently has no interest and, during the term of this Agreement, shall not acquire any interest, direct or indirect, which would conflict in any manner or degree with the performance or services required under the Agreement. The Contractor shall comply with any applicable provisions of the New Mexico Governmental Conduct Act and the New Mexico Financial Disclosures Act.

B. The Contractor further represents and warrants that it has complied with, and, during the term of this Agreement, will continue to comply with, and that this Agreement complies with all applicable provisions of the Governmental Conduct Act, Chapter 10, Article 16 NMSA 1978.

C. Contractor's representations and warranties in Paragraphs A and B of this Paragraph are material representations of fact upon which the City relied when this Agreement was entered into by the parties. Contractor shall provide immediate written notice to the City if, at any time during the term of this Agreement, Contractor learns that Contractor's representations and warranties in Paragraphs A and B of this Paragraph 20 were erroneous on the effective date of this Agreement or have become erroneous by reason of new or changed circumstances. If it is later determined that Contractor's representations and warranties in Paragraphs A and B of this Paragraph 20 were erroneous on the effective date of this Agreement or have become erroneous by reason of new or changed circumstances, in addition to other remedies available to the City and notwithstanding anything in the Agreement to the contrary, the City may immediately terminate the Agreement.

D. All terms defined in the Governmental Conduct Act have the same meaning in this section.

20. **Approval of Contractor Representative(s)**

The City reserves the right to require a change in Contractor representative(s) if the assigned representative(s) are not, in the opinion of the City, adequately serving the needs of the City.

21. **Scope of Agreement; Merger**

This Agreement incorporates all the agreements, covenants, and understandings between the parties hereto concerning the subject matter hereof, and all such covenants, agreements and understandings have been merged into this written Agreement. No prior agreements or understandings, verbal or otherwise, of the parties or their agents shall be valid or enforceable unless embodied in this Agreement.

22. **Notice**

The Procurement Code, Sections 13-1-28 through 13-1-199 NMSA 1978, imposes civil and criminal penalties for its violation. In addition, the New Mexico criminal statutes impose felony penalties for bribes, gratuities and kickbacks.

23. **Equal Opportunity Compliance**

The Contractor agrees to abide by all federal and state laws, and local Ordinances, pertaining to equal employment opportunity. In accordance with all such laws, rules, and regulations, the Contractor agrees to assure that no person in the United States shall on the grounds of race, religion, color, national origin, ancestry, sex, age, physical or mental handicap, or serious medical condition, spousal affiliation, sexual orientation or gender identity, be excluded from employment with or participation in, be denied the benefits of, or be otherwise subjected to discrimination under any program or activity performed under this Agreement. If Contractor is found not to be in compliance with these requirements during the life of this Agreement, Contractor agrees to take appropriate steps to correct these deficiencies.

24. **Indemnification**

The Contractor shall hold the City and its employees harmless and shall indemnify the City and its employees against any and all claims, suits, actions, liabilities and costs of any kind, including attorney's fees for personal injury or damage to property arising from the acts or omissions of the Contractor, its agents, officers, employees or subcontractors. The Contractor shall not be liable for any injury or damage as a result of any negligent act or omission committed by the City, its officers or employees.

25. **New Mexico Tort Claims Act**

Any liability incurred by the City of Santa Fe in connection with this Agreement is subject to the immunities and limitations of the New Mexico Tort Claims Act, Section 41-4-1, et. seq. NMSA 1978, as amended. The City and its "public employees" as defined in the New Mexico Tort Claims Act, do not waive sovereign immunity, do not waive any defense and do not waive any limitation of liability pursuant to law. No provision in this Agreement modifies or waives any provision of the New Mexico Tort Claims Act.

26. **Applicable Law**

The laws of the State of New Mexico shall govern this Agreement, without giving effect to its choice of law provisions. Venue shall be proper only in a New Mexico court of competent jurisdiction in accordance with NMSA 1978, § 38-3-2. By execution of this Agreement, Contractor acknowledges and agrees to the jurisdiction of the courts of the State of New Mexico over any and all lawsuits arising under or out of any term of this Agreement.

27. **Limitation of Liability**

The Contractor's liability to the City, for any cause whatsoever shall be limited to the purchase price paid to the Contractor for the products and services that are the subject of the City's, claim. The foregoing limitation does not apply to paragraph 25 of this Agreement or to damages resulting from personal injury caused by the Contractor's negligence.

28. **Incorporation by Reference and Precedence**

If this Agreement has been procured pursuant to a request for proposals, this Agreement is derived from (1) the request for proposal, (including any written clarifications to the request for proposals and any City response to questions); (2) the Contractor's best and final offer; and (3) the Contractor's response to the request for proposals.

In the event of a dispute under this Agreement, applicable documents will be referred to for the purpose of clarification or for additional detail in the following order of precedence: (1) amendments to the Agreement in reverse chronological order; (2) the Agreement, including the scope of work and all terms and conditions thereof; (3) the request for proposals, including attachments thereto and written responses to questions and written clarifications; (4) the Contractor's best and final offer if such has been made and accepted by the City; and (5) the Contractor's response to the request for proposals.

29. **Workers' Compensation**

The Contractor agrees to comply with state laws and rules applicable to workers' compensation benefits for its employees. If the Contractor fails to comply with the Workers' Compensation Act and applicable rules when required to do so, this Agreement may be terminated by the City.

30. **Inspection**

If this contract is for the purchase of tangible personal property (goods), final inspection and acceptance shall be made at Destination. Tangible personal property rejected at Destination for non-conformance to specifications shall be removed at Contractor's risk and expense promptly after notice of rejection and shall not be allowable as billable items for payment.

31. **Inspection of Services**

If this contract is for the purchase of services, the following terms shall apply.

A. Services, as used in this Article, include services performed, workmanship, and material furnished or utilized in the performance of services.

B. The Contractor shall provide and maintain an inspection system acceptable to the City covering the services under this Agreement. Complete records of all inspection work performed by the Contractor shall be maintained and made available to the City and for as long thereafter as the Agreement requires. The City has the right to inspect and test all services contemplated under this Agreement to the extent practicable at all times and places during the term of the Agreement. The City shall perform inspections and tests in a manner that will not unduly delay or interfere with Contractor's performance.

C. If the City performs inspections or tests on the premises of the Contractor or a subcontractor, the Contractor shall furnish, and shall require subcontractors to furnish, at no increase in contract price, all reasonable facilities and assistance for the safe and convenient performance of such inspections or tests.

D. If any part of the services do not conform with the requirements of this Agreement, the City may require the Contractor to re-perform the services in conformity with the requirements of this Agreement at no increase in contract amount. When the defects in services cannot be corrected by re-performance, the City may:

(1) require the Contractor to take necessary action(s) to ensure that future performance conforms to the requirements of this Agreement; and

(2) reduce the contract price to reflect the reduced value of the services performed.

E. If the Contractor fails to promptly re-perform the services or to take the necessary action(s) to ensure future performance in conformity with the requirements of this Agreement, the City may:

(1) by contract or otherwise, perform the services and charge to the Contractor any cost incurred by the City that is directly related to the performance of such service; or

(2) terminate the contract for default.

32. **Insurance**

If the services contemplated under this Agreement will be performed on or in City facilities or property, Contractor shall maintain in force during the entire term of this Agreement, the following insurance coverage(s), naming the City as additional insured.

A. Commercial General Liability insurance shall be written on an occurrence basis and be a broad as ISO Form CG 00 01 with limits not less than $2,000,000 per occurrence and $2,000,000 in the aggregate for claims against bodily injury, personal and advertising injury, and

property damage. Said policy shall include broad form Contractual Liability coverage and be endorsed to name the City of Santa Fe their officials, officers, employees, and agents as additional insureds.

B. Business Automobile Liability insurance for all owned, non-owned automobiles, with a combined single limit not less than $1,000,000 per accident.

C. Broader Coverage and Limits. The insurance requirements under this Agreement shall be the greater of (1) the minimum coverage and limits specified in this Agreement, or (2) the broader coverage and maximum limits of coverage of any insurance policy or proceeds available to the Named Insured. It is agreed that these insurance requirements shall not in any way act to reduce coverage that is broader or that includes higher limits than the minimums required herein. No representation is made that the minimum insurance requirements of this Agreement are sufficient to cover the obligations of Contractor hereunder.

D. Contractor shall maintain the above insurance for the term of this Agreement and name the City as an additional insured and provide for 30 days cancellation notice on any Certificate of Insurance form furnished by Contractor. Such certificate shall also specifically state the coverage provided under the policy is primary over any other valid and collectible insurance and provide a waiver of subrogation.

33. **Impracticality of Performance**

A party shall be excused from performance under this Agreement for any period that the party is prevented from performing as a result of an act of God, strike, war, civil disturbance, epidemic, or court order, provided that the party has prudently and promptly acted to take any and all steps that are within the party's control to ensure performance. Subject to this provision, such non-performance shall not be deemed a default or a ground for termination.

34. **Invalid Term or Condition**

If any term or condition of this Agreement shall be held invalid or unenforceable, the remainder of this Agreement shall not be affected and shall be valid and enforceable.

35. **Enforcement of Agreement**

A party's failure to require strict performance of any provision of this Agreement shall not waive or diminish that party's right thereafter to demand strict compliance with that or any other provision. No waiver by a party of any of its rights under this Agreement shall be effective unless express and in writing, and no effective waiver by a party of any of its rights shall be effective to waive any other rights.

36. **Patent, Copyright and Trade Secret Indemnification**

A. The Contractor shall defend, at its own expense, the City against any claim that any product or service provided under this Agreement infringes any patent, copyright to

trademark in the United States or Puerto Rico, and shall pay all costs, damages and attorneys' fees that a court finally awards as a result of any such claim. In addition, if any third party obtains a judgment against the City based upon Contractor's trade secret infringement relating to any product or services provided under this Agreement, the Contractor agrees to reimburse the City for all costs, attorneys' fees and amount of the judgment. To qualify for such defense and or payment, the City shall:

1) give the Contractor prompt written notice within 48 hours of any claim;
2) allow the Contractor to control the defense of settlement of the claim; and
3) cooperate with the Contractor in a reasonable way to facilitate the defense or settlement of the claim.

B. If any product or service becomes, or in the Contractor's opinion is likely to become the subject of a claim of infringement, the Contractor shall at its option and expense:

1) provide the City the right to continue using the product or service and fully indemnify the City against all claims that may arise out of the City's use of the product or service;

2) replace or modify the product or service so that it becomes non-infringing; or,

3) accept the return of the product or service and refund an amount equal to the value of the returned product or service, less the unpaid portion of the purchase price and any other amounts, which are due to the Contractor. The Contractor's obligation will be void as to any product or service modified by the City to the extent such modification is the cause of the claim.

37. **Survival**

The Agreement paragraphs titled "Patent, Copyright, Trademark, and Trade Secret Indemnification; Indemnification; and Limit of Liability" shall survive the expiration of this Agreement. Software licenses, leases, maintenance and any other unexpired Agreements that were entered into under the terms and conditions of this Agreement shall survive this Agreement.

38. **Disclosure Regarding Responsibility**

A. Any prospective Contractor and any of its Principals who enter into a contract greater than sixty thousand dollars ($60,000.00) with any City for professional services, tangible personal property, services or construction agrees to disclose whether the Contractor, or any principal of the Contractor's company is presently debarred, suspended, proposed for debarment, or declared ineligible for award of contract by any federal entity, state agency or local public body.

B. Principal, for the purpose of this disclosure, means an officer, director, owner, partner, or a person having primary management or supervisory responsibilities within a business entity or related entities.

C. The Contractor shall provide immediate written notice to the City if, at any time during the term of this Agreement, the Contractor learns that the Contractor's disclosure was at

any time erroneous or became erroneous by reason of changed circumstances.

D. A disclosure that any of the items in this requirement exist will not necessarily result in termination of this Agreement. However, the disclosure will be considered in the determination of the Contractor's responsibility and ability to perform under this Agreement. Failure of the Contractor to furnish a disclosure or provide additional information as requested will be grounds for immediate termination of this Agreement pursuant to the conditions set forth in Paragraph 7 of this Agreement.

E. Nothing contained in the foregoing shall be construed to require establishment of a system of records in order to render, in good faith, the disclosure required by this document. The knowledge and information of a Contractor is not required to exceed that which is the normally possessed by a prudent person in the ordinary course of business dealings.

F. The disclosure requirement provided is a material representation of fact upon which reliance was placed when making an award and is a continuing material representation of the facts during the term of this Agreement. If during the performance of the contract, the Contractor is indicted for or otherwise criminally or civilly charged by any government entity (federal, state or local) with commission of any offenses named in this document the Contractor must provide immediate written notice to the City. If it is later determined that the Contractor knowingly rendered an erroneous disclosure, in addition to other remedies available to the Government, the City may terminate the involved contract for cause. Still further the City may suspend or debar the Contractor from eligibility for future solicitations until such time as the matter is resolved to the satisfaction of the City.

39. **Suspension, Delay or Interruption of Work**

The City may, without cause, order the Contractor, in writing, to suspend, delay or interrupt the work in whole or in part for such period as the City may determine. The contract sum and contract time shall be adjusted for increases in cost and/or time associated with Contractor's compliance therewith. Upon receipt of such notice, Contractor shall leave the jobsite and any equipment in a safe condition prior to departing. Contractor must assert rights to additional compensation within thirty (30) days after suspension of work is lifted and return to work is authorized. Any compensation requested for which entitlement is granted and the contract sum adjusted, shall have profit included (for work completed) and for cost only (not profit) for Contractor costs incurred directly tied to the suspension itself and not otherwise covered by Contract remedy. Any change in Total Compensation must be reflected in an Amendment executed pursuant to Section 8 of this Agreement.

40. **Notification**

Either party may give written notice to the other party in accordance with the terms of this Paragraph. Any written notice required or permitted to be given hereunder shall be deemed to have been given on the date of delivery if delivered by personal service or hand delivery or three (3) business days after being mailed.

To the City:

Youth and Family Services Division

Brittany Rodriguez, Program Manager

PO Box 909

Santa Fe, New Mexico, 87504-0909

bcrodriguez@santafenm.gov

To the Contractor:

The Life Link

Michael DeBernardi, CEO

2325 Cerrillos Road, Santa Fe, NM

drdebernardi@thelifelink.org

Either party may change its representative or address above by written notice to the other in accordance with the terms of this Paragraph. The carrier for mail delivery and notices shall be the agent of the sender.

41. **Succession**

This Agreement shall extend to and be binding upon the successors and assigns of the parties.

IN WITNESS WHEREOF, the Parties have executed this Agreement as of the date of the signature by the required approval authorities below.

CITY OF SANTA FE:

ALAN WEBBER, MAYOR

DATE: Dec 21, 2023

THE LIFE LINK:

MICHAEL DeBERNARDI, CEO

DATE: Nov 30, 2023

CRS# 02-097780-00-8

Registration # 29352

ATTEST:

Geralyn Cardenas (Dec 21, 2023 11:46 MST)

GERALYN CARDENAS, INTERIM CITY CLERK

GB MTG 12/13/2023 XIV

CITY ATTORNEY'S OFFICE:

ASSISTANT CITY ATTORNEY

APPROVED FOR FINANCES:

Emily K. Oster
Emily K. Oster (Dec 1, 2023 18:07 MST)

EMILY OSTER, FINANCE DIRECTOR

510400/2400122 AL

Life Link Amend-1-Packet

Final Audit Report 2024-11-08

Created:	2024-11-08
By:	Justin Gonzales (jmgonzales@santafenm.gov)
Status:	Signed
Transaction ID:	CBJCHBCAABAAc4b9K2aSHcCKVoqtFMAhgdcrl87BZGDf

"Life Link Amend-1-Packet" History

Document created by Justin Gonzales (jmgonzales@santafenm.gov)
2024-11-08 - 4:48:58 PM GMT- IP address: 63.232.20.2

Document emailed to JULIE SANCHEZ (jjsanchez@santafenm.gov) for signature
2024-11-08 - 4:50:10 PM GMT

Email viewed by JULIE SANCHEZ (jjsanchez@santafenm.gov)
2024-11-08 - 4:57:52 PM GMT- IP address: 104.47.64.254

Document e-signed by JULIE SANCHEZ (jjsanchez@santafenm.gov)
Signature Date: 2024-11-08 - 4:58:25 PM GMT - Time Source: server- IP address: 63.232.20.2

Document emailed to HENRI HAMMOND-PAUL (hmhammondpaul@santafenm.gov) for signature
2024-11-08 - 4:58:27 PM GMT

Email viewed by HENRI HAMMOND-PAUL (hmhammondpaul@santafenm.gov)
2024-11-08 - 4:59:15 PM GMT- IP address: 104.47.65.254

Document e-signed by HENRI HAMMOND-PAUL (hmhammondpaul@santafenm.gov)
Signature Date: 2024-11-08 - 5:12:21 PM GMT - Time Source: server- IP address: 63.232.20.2

Agreement completed.
2024-11-08 - 5:12:21 PM GMT

Powered by Adobe Acrobat Sign

City of Santa Fe, New Mexico

200 Lincoln Avenue, P.O. Box 909, Santa Fe, N.M. 87504-0909
www.santafenm.gov

Alan Webber, Mayor

Councilors:
Signe I. Lindell, Mayor Pro Tem, District 1
Alma G. Castro, District 1
Michael J. Garcia, District 2
Carol Romero-Wirth, District 2
Lee Garcia, District 3
Pilar F.H. Faulkner, District 3
Jamie Cassutt, District 4
Amanda Chavez, District 4

DATE October 25, 2024

TO Governing Body

VIA John Blair, City Manager

FROM Regina Wheeler, Public Works Director
Regina Wheeler (Oct 29, 2024 16:58 MDT)
Emily Oster, Finance Director

ACTION
Request for Approval of Amendment #3 to the Intergovernmental Services Agreement With North Central New Mexico Economic Development District for Fiscal Agent Services Item #23-0688 to Add 2024 Capital Appropriations to the Agreement. (Regina Wheeler, Public Works Director; rawheeler@santafenm.gov)

BACKGROUND
At the December 13, 2023, regular meeting the Governing Body approved an Intergovernmental Services Agreement with North Central New Mexico Economic Development District (NCNMEDD) for Fiscal Agent Services for the 2021 capital appropriations due to requirement from New Mexico Department of Finance and Administration (DFA).

Amendment #1 added 2022 and 2023 capital appropriations to the scope based on DFA requirements, and lowered NCNMEDD fee from 3% to 1%.

Amendment #2 added 2023 “Junior Bill” capital projects to the fiscal agent agreement scope of work.

Amendment #3 adds 2024 Capital Appropriations to the scope of work so that the City may utilize these appropriations for community benefit. List of appropriation is shown on Exhibit A of the Amendment.

Note that the City pays the fiscal administrator a fee as funds are spent and pursued for reimbursement from the grant, not on the full grant amount. If and when the City no longer needs fiscal agent services, it may terminate the agreement with 30 days’ notice.

Attachments
Original Agreement
Amendment #1
Amendment #2
Amendment #3 for approval

INTERGOVERNMENTAL SERVICES AGREEMENT
BETWEEN CITY OF SANTA FE AND
NORTH CENTRAL NEW MEXICO ECONOMIC DEVELOPMENT DISTRICT
FOR FISCAL AGENT SERVICES

WHEREAS, the State of New Mexico appropriated funding for the purposes of improvements in the City of Santa Fe ("City") to the State of New Mexico, Department of Finance and Administration, Local Government Division, in the laws of Laws of 2021, Chapter 138, as detailed below ("Projects");

WHEREAS, NCNMEDD acknowledges that the appropriations for the Projects are intended for City;

WHEREAS, City, a municipality within Santa Fe County and the State of New Mexico, agrees to engage North Central New Mexico Economic Development District ("NCNMEDD") in providing fiscal agency services in relation to the Projects.

NOW, THEREFORE, the parties do mutually agree as follows:

This Agreement is entered into by and between City and NCNMEDD pursuant to the following purposes, conditions, and terms:

A. PURPOSE

The purpose of this Agreement is for NCNMEDD to provide fiscal agent services in connection with the Projects as specifically appropriated under New Mexico Legislative Appropriation Agreements identified as follows:

ApprID	Leg. Session	Appropriation Title	Year	Ch	Sect	Agency		Amount	Project Description
F2900	2021	SANTA FE PARKS UPGRADE	2021	138	29/341	341	Finance & Administration	1,000,000	to plan, design, construct, repair, improve and equip parks in Santa Fe in Santa Fe county;
F2902	2021	SANTA FE TIERRA CONTENTA TRAIL CONSTRUCT	2021	138	29/343	341	Finance & Administration	300,000	to plan, design and construct a trail in the Tierra Contenta subdivision in Santa Fe in Santa Fe county;
F2903	2021	SANTA FE MIDTOWN INFRA DES CONSTRUCT	2021	138	29/344	341	Finance & Administration	1,000,000	to plan, design, construct and improve infrastructure for the midtown Santa Fe property in Santa Fe in Santa Fe county;
F2899	2021	SANTA FE HOMEBOUND MEALS PROGRAM IMPROVE	2021	138	29/340	341	Finance & Administration	250,000	to plan, design, renovate, construct, improve and equip a facility for a meals program serving homebound and special needs individuals in Santa Fe in Santa Fe county;
F2901	2021	SANTA FE SOUTHSIDE TEEN CTR CONSTRUCT	2021	138	29/342	341	Finance & Administration	1,805,000	to plan, design, construct, furnish and equip a teen and resource center on the south side of Santa Fe in Santa Fe county;

Other projects may be included as agreed upon in writing and by amendment between the Parties.

B. SCOPE OF WORK

NCNMEDD's services in support of the above purpose shall be to provide fiscal agency services associated with the Projects, including:

1. NCNMEDD Fiscal Agency Services:

   - Ensure that grant funds are expended in compliance with all applicable laws, regulations, and grant agreement and the transactions are appropriately accounted for in compliance with such laws, regulations, and grant agreement;
   - Ensure safeguarding of grant funds and assets acquired with grant funds and proper accounting thereof in compliance with applicable laws, regulations, and grant agreement;
   - Act as liaison between City and appropriate New Mexico state agencies as needed;
   - Complete all required quarterly and financial reporting with information provided by City;
   - Review and sign-off on project invoices to the appropriate State agency in a timely manner; and

- Work with the State on providing direct project reimbursements to City and act as a facilitator for such reimbursements as needed.

2. City Role and Responsibilities
   - City understands it remains ultimately responsible for executing and complying with all applicable laws, regulations, and grant agreement requirements such as flow down provisions, executing procurement responsibilities, and subcontractor management, as well as project, grant, and financial management.

C. TIMEFRAME

Work pursuant to this Agreement shall be effective no sooner than the date of last party signature below, and shall conclude upon notice by either party pursuant to paragraph I, but no later than one month following the reversion date of the appropriations, except as amended and mutually agreed upon in writing.

D. COMPENSATION:

NCNMEDD has agreed to provide the agreed upon services at three percent (3%) of the dollar amount(s) the City expends during the term of this Agreement towards the completion of the Projects, as those amounts were appropriated. Billing for services to City shall occur by NCNMEDD no more than on a monthly basis. The City will not use funds from this grant to make such payments.

E. RECORDS AND RECOVERY:

NCNMEDD shall maintain appropriate records of services rendered during the Agreement term and retain them for a period of three (3) years after the grant has been closed.

F. ACCESS TO INFORMATION

City and its contractors and subcontractors shall provide information, as needed, for purposes and work described in this Agreement. NCNMEDD will be included and copied on all invoices and reports, prior to City's submission to the appropriate State agency.

G. OWNERSHIP OF PROJECTS

All documents, capital improvements, and project assets produced pursuant to this Agreement shall be the property of City which shall assume full administrative responsibility for the life of the project; or the State grant agreement required period, whichever comes first.

H. LIMITATION OF LIABILITY

This Agreement shall not create a general liability of the constituent members of NCNMEDD.

City shall hold NCNMEDD harmless with respect to any damages, expenses, or claims arising or in connection with any negligent acts, errors, or omissions performed by City under this Agreement. This term shall not limit NCNMEDD liability with respect to NCNMEDD's negligence or willful misconduct.

I. MODIFICATION AND TERMINATION

Any modifications or amendments to this Agreement shall be in writing, and when signed by both parties shall be made part of the Agreement. This Agreement may be terminated by either party upon thirty (30) days written notice to the other.

J. CERTIFICATION

City shall comply with the requirements of all applicable laws, rules, and regulations, and shall assume full responsibility for payment of federal, state, and local taxes and contributions imposed or required under Social Security, Workers Compensation and income tax laws. City is required to follow all State procurement regulations and it is City obligation and responsibility to follow all State requirements as certified in the project bond questionnaire process and as included in associated State grant agreements, including reporting and drawdown requirements, such documents to be filed for each project in conjunction with this agreement.

K. ADEQUATE APPROPRIATIONS

Performance of this agreement is contingent upon sufficient appropriations and authorization being made for the performance of this Agreement. If sufficient appropriations and authorization are not made, this Agreement shall terminate immediately upon written notice being given by NCNMEDD to City. NCNMEDD's decision as to whether sufficient appropriations are available shall be accepted by City and shall be final. If NCNMEDD proposes an amendment to the Agreement to unilaterally reduce its Fiscal Agency Services, City shall have the option to terminate the Agreement or agree to negotiate for reduced Fiscal Agency Services: within thirty (30) days of receipt of the proposed amendment.

L. PENALTIES

The Procurement Code, NMSA 1978, Sections 13-1-28 to -199, imposes civil and criminal penalties for its violation. In addition, the New Mexico criminal statutes impose felony penalties for illegal bribes, gratuities, and kickbacks.

M. NOTICES

Any notice required to be given to either party by this Agreement shall be in writing

and shall be delivered in person, by courier service or by U.S. mail, either first class or certified, return receipt requested, postage prepaid as follows:

To: City
City Manager John Blair
City of Santa Fe
200 Lincoln
Santa Fe, New Mexico, 87501j

To NCNMEDD:
Monica Abeita Executive Director NCNMEDD
3900 Paseo del Sol
Santa Fe, NM 87507

N. DISPUTE RESOLUTION

The parties to this agreement agree that in the event of a dispute that may arise hereunder, which dispute cannot be reasonably resolve, they will submit to mediation by a neutral mediator, the cost of which will be borne equally by both parties. Disputes that cannot be resolved by mediation shall be subject to the laws of the State of New Mexico under the jurisdiction of the First Judicial District Court.

O. BREACH AND DEFAULT

If either party commits a breach or default in the performance or observance of any of its obligations under this agreement and such breach or default continues and is not corrected within thirty (30) days of written notification of such breach or default by either party to the other, the non-breaching or non-defaulting party shall have the right to terminate this agreement by giving notice to the breaching or defaulting party.

P. ASSIGNMENT

No portion of this agreement may be assigned to another party without the express written consent of the City and NCNMEDD.

APPROVED THIS 19th DAY OF December, 2023, BY CITY.

NORTH CENTRAL NEW MEXICO ECONOMIC DEVELOPMENT DISTRICT:

BY: Monica Abeita 12/8/23

Monica Abeita, Executive Director Date

IN WITNESS WHEREOF, the City of Santa Fe has agreed to this Waiver as of the date of the signature by the required approval authorities below.

CITY OF SANTA FE:

ALAN WEBBER, MAYOR

DATE: Dec 19, 2023

ATTEST:

Geralyn Cardenas (Dec 19, 2023 14:06 MST)

GERALYN CARDENAS, INTERIM CITY CLERK XIV

GB MTG 12/13/23

CITY ATTORNEY'S OFFICE:

Erin McSherry

Erin McSherry (Dec 8, 2023 13:36 MST)

ERIN MCSHERRY, CITY ATTORNEY

Munis Contract#_____
Original Contract Item#___23-0688____
SWPA/GSA/Coop/RFP/ITB #: _____

CITY OF SANTA FE
AMENDMENT No. 1 TO
Intergovernmental Service Agreement
ITEM#23-0688

This AMENDMENT No 1 (the "Amendment") amends the INTERGOVERNMENTAL SERVICES AGREEMENT BETWEEN CITY OF SANTA FE AND NORTH CENTRAL NEW MEXICO ECONOMIC DEVELOPMENT DISTRICT FOR FISCAL AGENT SERVICES, dated December 19, 2023 (the "Agreement"), between the City of Santa Fe (the "City") and the North Central New Mexico Economic Development District (NCNMEDD). The date of this Amendment shall be the date when it is executed by the City and the NCNMEDD whichever occurs last.

RECITALS:

A. Under the terms of the Agreement, the NCNMEDD has agreed to provide fiscal agent services in connection with the Capital Projects specified under the Agreement.

B. Pursuant to Article I of the Agreement, and for good and valuable consideration, the receipt and sufficiency of which are acknowledged by the parties, the City and the NCNMEDD agree as follows:

1. PURPOSE:

Article A of the Agreement is amended to add an additional twenty-two (22) Capital appropriations as seen on Exhibit A.

2. COMPENSATION:

Article D, of the Agreement is amended in its entirety as follows:

NCNMEDD has agreed to provide the agreed upon services at one percent (1%) of the dollar amount(s) the City expends during the term of this Agreement towards the completion of the Projects, as those amounts were appropriated. Billing for services to City shall occur by NCNMEDD no more than on a monthly basis. The City will not use funds from these Capital appropriations to make such payments.

3. CONTRACT IN FULL FORCE.

Except as specifically provided in this Amendment, the Agreement remains and shall remain in full force and effect, in accordance with its terms.

IN WITNESS WHEREOF, the parties have executed this Amendment No.1 to the Agreement as of the dates set forth below.

CITY OF SANTA FE:

Alan Webber (Mar 14, 2024 10:01 MDT)

ALAN WEBBER, MAYOR

DATE: Mar 14, 2024

NCNMEDD

Monica Abeita

MONICA ABEITA
EXECUTIVE DIRECTOR

Executive Director
TITLE

DATE: Feb. 20, 2024

ATTEST:

Geralyn Cardenas (Mar 14, 2024 11:32 MDT)

GERALYN CARDENAS, INTERIM CITY CLERK

GB MTG 03/13/2024 XIV

CITY ATTORNEY'S OFFICE:

Marcos Martinez
Marcos Martinez (Feb 16, 2024 13:08 MST)

SENIOR ASSISTANT CITY ATTORNEY

EXHIBIT A

Approp ID	Leg. Session	Appropriation Title	Approp. Amount	Reversion Date	Agency	Bond Series
22-G2419	2022	Jemez Road Construction	$ 400,000	6/30/2026	NMED	STB23SC
22-G3010	2022	SF Fire Fleet Equip / Upgrade Improv	$ 120,000	6/30/2026	DFA	STB23SC
22-G3012	2022	Harrison Rd Improve Construct	$ 100,000	6/30/2026	DFA	STB23SC
22-G3016	2022	Homebound Meals Program Improve	$ 200,000	6/30/2026	DFA	STB23SC
22-G3017	2022	Midtown Property Infra Improve	$ 1,100,000	6/30/2026	DFA	STB23SC
22-G3018	2022	SWAN Park Phase 2 Construct	$ 380,000	6/30/2026	DFA	STB23SC
22-G3019	2022	Tierra Contenta Trail Improve	$ 300,000	6/30/2026	DFA	STB23SC
22-G3165	2022	Median Beautify Phase 1 Design	$ 1,170,000	6/30/2026	DOT	STB23SC
22-G3169	2022	Governor Miles Rd. Construct	$ 300,000	6/30/2026	DOT	STB23SC
22-G3170	2022	Pacheco Street Improve	$ 150,000	6/30/2026	DOT	STB23SC
G22-5353	2022	Mary Esther Gonzales Senior Ctr- Equip	$ 235,630	6/30/2026	ALTSD	STB22SC- GO Bonds
G22-5354	2022	Pasatiemo Senior Ctr- Equip	$ 65,805	6/30/2026	ALTSD	STB22SC- GO Bonds
23-H3200	2023	Santa Fe Building Upgrade	$ 210,000	6/30/2027	DFA	General Fund
23-H3201	2023	SF Fire Station #2 Construction	$ 3,995,000	6/30/2027	DFA	General Fund
23-H3202	2023	SF Homebound Meals Faculty Ren	$ 200,000	6/30/2027	DFA	General Fund
23-H3203	2023	SF Midtown Infa. Improvement	$ 4,900,000	6/30/2027	DFA	General Fund
23-H3204	2023	SF Muni Rec Sports Cmplx Field Const.	$ 50,000	6/30/2027	DFA	General Fund
23-H3205	2023	SF Pickleball Cmplx Ft. Marcy Constr.	$ 650,000	6/30/2027	DFA	General Fund
23-H3206	2023	SF SWAN Park Phase 2 Improvement	$ 2,400,000	6/30/2027	DFA	General Fund
23-H3207	2023	SF Water History Park Improvement	$ 350,000	6/30/2027	DFA	General Fund
23-H3359	2023	Governor Miles Road Improvement	$ 210,000	6/30/2027	DOT	General Fund
23-H3360	2023	Pacheco Street Improvement	$ 350,000	6/30/2027	DOT	General Fund

INTERGOVERNMENTAL SERVICES AGREEMENT
BETWEEN CITY OF SANTA FE AND
NORTH CENTRAL NEW MEXICO ECONOMIC DEVELOPMENT DISTRICT
FOR FISCAL AGENT SERVICES

WHEREAS, the State of New Mexico appropriated funding for the purposes of improvements in the City of Santa Fe ("City") to the State of New Mexico, Department of Finance and Administration, Local Government Division, in the laws of Laws of 2021, Chapter 138, as detailed below ("Projects");

WHEREAS, NCNMEDD acknowledges that the appropriations for the Projects are intended for City;

WHEREAS, City, a municipality within Santa Fe County and the State of New Mexico, agrees to engage North Central New Mexico Economic Development District ("NCNMEDD") in providing fiscal agency services in relation to the Projects.

NOW, THEREFORE, the parties do mutually agree as follows:

This Agreement is entered into by and between City and NCNMEDD pursuant to the following purposes, conditions, and terms:

A. PURPOSE

The purpose of this Agreement is for NCNMEDD to provide fiscal agent services in connection with the Projects as specifically appropriated under New Mexico Legislative Appropriation Agreements identified as follows:

ApprID	Leg. Session	Appropriation Title	Year	Ch	Sect	Agency		Amount	Project Description
F2900	2021	SANTA FE PARKS UPGRADE	2021	138	29/341	341	Finance & Administration	1,000,000	to plan, design, construct, repair, improve and equip parks in Santa Fe in Santa Fe county;
F2902	2021	SANTA FE TIERRA CONTENTA TRAIL CONSTRUCT	2021	138	29/343	341	Finance & Administration	300,000	to plan, design and construct a trail in the Tierra Contenta subdivision in Santa Fe in Santa Fe county;
F2903	2021	SANTA FE MIDTOWN INFRA DES CONSTRUCT	2021	138	29/344	341	Finance & Administration	1,000,000	to plan, design, construct and improve infrastructure for the midtown Santa Fe property in Santa Fe in Santa Fe county;
F2899	2021	SANTA FE HOMEBOUND MEALS PROGRAM IMPROVE	2021	138	29/340	341	Finance & Administration	250,000	to plan, design, renovate, construct, improve and equip a facility for a meals program serving homebound and special needs individuals in Santa Fe in Santa Fe county;
F2901	2021	SANTA FE SOUTHSIDE TEEN CTR CONSTRUCT	2021	138	29/342	341	Finance & Administration	1,805,000	to plan, design, construct, furnish and equip a teen and resource center on the south side of Santa Fe in Santa Fe county;

Other projects may be included as agreed upon in writing and by amendment between the Parties.

B. SCOPE OF WORK

NCNMEDD's services in support of the above purpose shall be to provide fiscal agency services associated with the Projects, including:

1. NCNMEDD Fiscal Agency Services:

- Ensure that grant funds are expended in compliance with all applicable laws, regulations, and grant agreement and the transactions are appropriately accounted for in compliance with such laws, regulations, and grant agreement;
- Ensure safeguarding of grant funds and assets acquired with grant funds and proper accounting thereof in compliance with applicable laws, regulations, and grant agreement;
- Act as liaison between City and appropriate New Mexico state agencies as needed;
- Complete all required quarterly and financial reporting with information provided by City;
- Review and sign-off on project invoices to the appropriate State agency in a timely manner; and

- Work with the State on providing direct project reimbursements to City and act as a facilitator for such reimbursements as needed.

2. City Role and Responsibilities
   - City understands it remains ultimately responsible for executing and complying with all applicable laws, regulations, and grant agreement requirements such as flow down provisions, executing procurement responsibilities, and subcontractor management, as well as project, grant, and financial management.

C. TIMEFRAME

Work pursuant to this Agreement shall be effective no sooner than the date of last party signature below, and shall conclude upon notice by either party pursuant to paragraph I, but no later than one month following the reversion date of the appropriations, except as amended and mutually agreed upon in writing.

D. COMPENSATION:

NCNMEDD has agreed to provide the agreed upon services at three percent (3%) of the dollar amount(s) the City expends during the term of this Agreement towards the completion of the Projects, as those amounts were appropriated. Billing for services to City shall occur by NCNMEDD no more than on a monthly basis. The City will not use funds from this grant to make such payments.

E. RECORDS AND RECOVERY:

NCNMEDD shall maintain appropriate records of services rendered during the Agreement term and retain them for a period of three (3) years after the grant has been closed.

F. ACCESS TO INFORMATION

City and its contractors and subcontractors shall provide information, as needed, for purposes and work described in this Agreement. NCNMEDD will be included and copied on all invoices and reports, prior to City's submission to the appropriate State agency.

G. OWNERSHIP OF PROJECTS

All documents, capital improvements, and project assets produced pursuant to this Agreement shall be the property of City which shall assume full administrative responsibility for the life of the project; or the State grant agreement required period, whichever comes first.

H. LIMITATION OF LIABILITY

This Agreement shall not create a general liability of the constituent members of NCNMEDD.

City shall hold NCNMEDD harmless with respect to any damages, expenses, or claims arising or in connection with any negligent acts, errors, or omissions performed by City under this Agreement. This term shall not limit NCNMEDD liability with respect to NCNMEDD's negligence or willful misconduct.

I. MODIFICATION AND TERMINATION

Any modifications or amendments to this Agreement shall be in writing, and when signed by both parties shall be made part of the Agreement. This Agreement may be terminated by either party upon thirty (30) days written notice to the other.

J. CERTIFICATION

City shall comply with the requirements of all applicable laws, rules, and regulations, and shall assume full responsibility for payment of federal, state, and local taxes and contributions imposed or required under Social Security, Workers Compensation and income tax laws. City is required to follow all State procurement regulations and it is City obligation and responsibility to follow all State requirements as certified in the project bond questionnaire process and as included in associated State grant agreements, including reporting and drawdown requirements, such documents to be filed for each project in conjunction with this agreement.

K. ADEQUATE APPROPRIATIONS

Performance of this agreement is contingent upon sufficient appropriations and authorization being made for the performance of this Agreement. If sufficient appropriations and authorization are not made, this Agreement shall terminate immediately upon written notice being given by NCNMEDD to City. NCNMEDD's decision as to whether sufficient appropriations are available shall be accepted by City and shall be final. If NCNMEDD proposes an amendment to the Agreement to unilaterally reduce its Fiscal Agency Services, City shall have the option to terminate the Agreement or agree to negotiate for reduced Fiscal Agency Services: within thirty (30) days of receipt of the proposed amendment.

L. PENALTIES

The Procurement Code, NMSA 1978, Sections 13-1-28 to -199, imposes civil and criminal penalties for its violation. In addition, the New Mexico criminal statutes impose felony penalties for illegal bribes, gratuities, and kickbacks.

M. NOTICES

Any notice required to be given to either party by this Agreement shall be in writing

and shall be delivered in person, by courier service or by U.S. mail, either first class or certified, return receipt requested, postage prepaid as follows:

To: City
City Manager John Blair
City of Santa Fe
200 Lincoln
Santa Fe, New Mexico, 87501j

To NCNMEDD:
Monica Abeita Executive Director NCNMEDD
3900 Paseo del Sol
Santa Fe, NM 87507

N. DISPUTE RESOLUTION

The parties to this agreement agree that in the event of a dispute that may arise hereunder, which dispute cannot be reasonably resolve, they will submit to mediation by a neutral mediator, the cost of which will be borne equally by both parties. Disputes that cannot be resolved by mediation shall be subject to the laws of the State of New Mexico under the jurisdiction of the First Judicial District Court.

O. BREACH AND DEFAULT

If either party commits a breach or default in the performance or observance of any of its obligations under this agreement and such breach or default continues and is not corrected within thirty (30) days of written notification of such breach or default by either party to the other, the non-breaching or non-defaulting party shall have the right to terminate this agreement by giving notice to the breaching or defaulting party.

P. ASSIGNMENT

No portion of this agreement may be assigned to another party without the express written consent of the City and NCNMEDD.

APPROVED THIS 19th DAY OF December, 2023, BY CITY.

NORTH CENTRAL NEW MEXICO ECONOMIC DEVELOPMENT DISTRICT:

BY: Monica Abeita 12/8/23

Monica Abeita, Executive Director Date

IN WITNESS WHEREOF, the City of Santa Fe has agreed to this Waiver as of the date of the signature by the required approval authorities below.

CITY OF SANTA FE:

ALAN WEBBER, MAYOR

DATE: Dec 19, 2023

ATTEST:

Geralyn Cardenas (Dec 19, 2023 14:06 MST)

GERALYN CARDENAS, INTERIM CITY CLERK XIV

GB MTG 12/13/23

CITY ATTORNEY'S OFFICE:

Erin McSherry

Erin McSherry (Dec 8, 2023 13:36 MST)

ERIN MCSHERRY, CITY ATTORNEY

Emily K. Oster

Finance Director

Munis Contract#_____
Original Contract Item#___23-0688_____
SWPA/GSA/Coop/RFP/ITB #: _____

CITY OF SANTA FE
AMENDMENT No. 2 TO
Intergovernmental Service Agreement
ITEM#23-0688

This AMENDMENT No 2 (the "Amendment") amends the INTERGOVERNMENTAL SERVICES AGREEMENT BETWEEN CITY OF SANTA FE AND NORTH CENTRAL NEW MEXICO ECONOMIC DEVELOPMENT DISTRICT FOR FISCAL AGENT SERVICES, dated December 19, 2023 (the "Agreement"), between the City of Santa Fe (the "City") and the North Central New Mexico Economic Development District (NCNMEDD). The date of this Amendment shall be the date when it is executed by the City and the NCNMEDD whichever occurs last.

RECITALS:

A. Under the terms of the Agreement, the NCNMEDD has agreed to provide fiscal agent services in connection with the Capital Projects specified under the Agreement.

B. Pursuant to Article I of the Agreement, and for good and valuable consideration, the receipt and sufficiency of which are acknowledged by the parties, the City and the NCNMEDD agree as follows:

1. PURPOSE:

Article A of the Agreement is amended to add an additional three (3) capital appropriations as seen on Exhibit B.

2. CONTRACT IN FULL FORCE.

Except as specifically provided in this Amendment, the Agreement remains and shall remain in full force and effect, in accordance with its terms.

IN WITNESS WHEREOF, the parties have executed this Amendment No.2 to the Agreement as of the dates set forth below.

CITY OF SANTA FE:

Alan Webber (Apr 11, 2024 21:17 MDT)

ALAN WEBBER, MAYOR

DATE: Apr 11, 2024

CONTRACTOR:
NCNMEDD

Monica Abeita

MONICA ABEITA
EXECUTIVE DIRECTOR

Executive Director
TITLE

April 2, 2024

DATE:

ATTEST:

GERALYN CARDENAS (Apr 12, 2024 09:03 MDT)

GERALYN CARDENAS, INTERIM CITY CLERK

GB MTG 04/10/2024 XIV

CITY ATTORNEY'S OFFICE:

Marcos Martinez
Marcos Martinez (Apr 4, 2024 09:38 MDT)

SENIOR ASSISTANT CITY ATTORNEY

APPROVED FOR FINANCES:

Emily K. Oster

FINANCE DIRECTOR

EXHIBIT B

23-ZH9298	for Santa Fe to purchase security cameras and security systems at municipal parks	$	95,000.00
23-ZH9300	to purchase equipment and to provide arson investigation training to fire department three in Santa Fe	$	125,000.00
23-ZH9401	for sanitization and deep cleaning of all municipal swimming pools in Santa Fe	$	75,000.00

Original Contract Item# 23-0688
SWPA/GSA/Coop/RFP/ITB #: N/A

CITY OF SANTA FE
AMENDMENT No. 3 TO
Intergovernmental Service Agreement
ITEM#23-0688

This AMENDMENT No 3 (the "Amendment") amends the INTERGOVERNMENTAL SERVICES AGREEMENT BETWEEN CITY OF SANTA FE AND NORTH CENTRAL NEW MEXICO ECONOMIC DEVELOPMENT DISTRICT FOR FISCAL AGENT SERVICES, dated December 19, 2023 (the "Agreement"), between the City of Santa Fe (the "City") and the North Central New Mexico Economic Development District (NCNMEDD). The date of this Amendment shall be the date when it is executed by the City and the NCNMEDD whichever occurs last.

RECITALS:

A. Under the terms of the Agreement, the NCNMEDD has agreed to provide fiscal agent services in connection with the Capital Projects specified under the Agreement.

B. Pursuant to Article I of the Agreement, and for good and valuable consideration, the receipt and sufficiency of which are acknowledged by the parties, the City and the NCNMEDD agree as follows:

1. PURPOSE:

Article A of the Agreement is amended to add twenty-two (22) capital appropriations as seen on Exhibit A.

2. CONTRACT IN FULL FORCE.

Except as specifically provided in this Amendment, the Agreement remains and shall remain in full force and effect, in accordance with its terms.

IN WITNESS WHEREOF, the parties have executed this Amendment No.3 to the Agreement as of the dates set forth below.

CITY OF SANTA FE:

_____
ALAN WEBBER, MAYOR

DATE:_____

CONTRACTOR:
NCNMEDD

Monica Abeita
Monica Abeita (Oct 11, 2024 13:22 MDT)

MONICA ABEITA
EXECUTIVE DIRECTOR

DATE: Oct 11, 2024

ATTEST:

_____
GERALYN CARDENAS, INTERIM CITY CLERK

CITY ATTORNEY'S OFFICE:

Marcos Martinez
Marcos Martinez (Oct 11, 2024 13:26 MDT)

SENIOR ASSISTANT CITY ATTORNEY

APPROVED FOR FINANCES:

Emily K. Oster

FINANCE DIRECTOR

EXHIBIT A

Approp ID	Leg. Session	Appropriation Title	Approp. Amount	Reversion Date	Funding Agency	Funding Source
I2455	2024	Paseo Real Wastewater Facility	$1,600,000	30-Jun-28	NMED	General Fund
I2457	2024	Jemez Rd Sewer	$210,000	30-Jun-28	NMED	General Fund
I2458	2024	Vereda de Velencia WWater	$160,000	30-Jun-2028	NMED	General Fund
I3023	2024	Police Dept. Equipment Purchase	$250,000	30-Jun-2026	DFA	General Fund
I3134	2024	Fire Stn 2 Construct	$250,000	30-Jun-2028	DFA	General Fund
I3136	2024	Soccer Valley MRC Construct	$3,425,000	30-Jun-2028	DFA	General Fund
I3138	2024	Los Prados Park	$438,000	30-Jun-2028	DFA	General Fund
I3141	2024	Fire SCBA Equip Purchase	$250,000	30-Jun-2026	DFA	General Fund
I3142	2024	Ft Marcy Park Ren	$5,000,000	30-Jun-2028	DFA	General Fund
I3143	2024	Permanent and Transitional Housing	$400,000	30-Jun-2028	DFA	General Fund
I3144	2024	Railyard Bldg. Upgrade	$100,000	30-Jun-2028	DFA	General Fund
I3145	2024	Railyard Multipurpose Bldg	$175,000	30-Jun-2028	DFA	General Fund
I3146	2024	Regional Airport Phase 2 Improve	$2,000,000	30-Jun-2028	DFA	General Fund
I3147	2024	River Park Pedestrian Bridge	$240,000	30-Jun-2028	DFA	General Fund
I3318	2024	NM599-Airport Access Road	$4,500,000	30-Jun-2028	NMDOT	General Fund
I3319	2024	Rufina St. & Lopez Lane Intersection	$50,000	30-Jun-2028	NMDOT	General Fund
I3320	2024	Paseo del Sol Extension	$50,000	30-Jun-2028	NMDOT	General Fund
I3321	2024	St. Michael's Rail Trail Underpass	$100,000	30-Jun-2028	NMDOT	General Fund
I4219	2024	El Museo Improvements	$126,950	30-Jun-2026	DFA	Severance Tax Bond
I4220	2024	Homebound Meals	$100,000	30-Jun-2028	DFA	General Fund
I4221	2024	Municipal Court Renovations	$29,843	30-Jun-2028	DFA	General Fund
I4222	2024	Supportive Housing	$844,470	30-Jun-2026	DFA	General Fund

CITY OF SANTA FE PROCUREMENT CHECKLIST

Contractor Name: North Central New Mexico Economic Development District

Procurement/contract Title: Fiscal Agent Services

Procurement Method/Vehicle: ☐Sole Source ☐State Price Agreement/Existing ☐ Cooperative ☐Request For Proposals(RFP) ☐Invitation To Bid (ITB) ☐Exempt: 13-1-98 A

☐Small Purchase (Contract Under $60,000) ☐Other: _____

Requesting Department: Finance Department Staff Name: Emily K. Oster

Procurement Requirements:

Procurement files shall be maintained for all purchases and contracts, regardless of the method of procurement. The procurement files shall contain the basis on which the awards are made, all submitted bids/proposals, all evaluation materials (bid tabs or Evaluation Committee Reports), scoresheets, quotations, and all other documentation related to or prepared in conjunction with evaluations, negotiations, and the award processes. The procurements shall contain written determinations from the Requesting Departments, signed by the Chief Procurement Officers (this document), setting forth the reasoning for the contract award decisions before submitting them to the Committees.

REQUIRED DOCUMENTS FOR APPROVAL BY PURCHASING (CPD)

YES	N/A		YES	N/A	
☒	☐	**Written Determination (srvs)**	☐	☒	**Quote(s) (3 Valid & Current for Over 20k)**
☐	☒	**RFP - Confidential info to be provided to GB by CPD Buyer**	☐	☒	**BAR**
☐	☒	**ITB (include bid tab)**	☐	☒	**FIR**
☒	☐	**Other: Government to Government**	☐	☒	**Certificate of Insurance (srvs)**
☐	☒	**Cooperative Agreements and GSAs and Statewide Price Agreements (include the cover page to show valid date, s page, and items to be purchased)**			
☐	☒	**Horizon Declination or Screenshot of horizonsofnewmexico.org/services.html (srvs)**			
☒	☐	**Summary of Contract (only on contracts)**			
☐	☒	**Current Santa Fe Business Registration (or Exemption if no tax)**			
☒	☐	**Executed Contract or Price Agreement (legal and contractor must sign before purchasing approves)**			
☒	☐	**Chief Procurement Officer (or designee) Approval for Exempt from Procurement (use memo on our site)**			
☐	☒	**Evaluation Committee Report (RFPs only)**			
☐	☒	**Signed Sole Source Determination, Vendor Written Quote, SS Letter from Contractors, and 30 Days Email**			
☐	☒	**>20k = Memo addressed to City Manager (Under 150K) Committees/City Council (Over 150K)**			

Emily K. Oster		Finance Director	4/2/24
Department Point of Contact		Title	Date
Emily K. Oster			4/2/24
Department Director			Date
			Apr 5, 2024
Chief Procurement Officer			Date
N/A			
ITT Representative		Title	Date

CoSF Version 3 12.1.2023

City of Santa Fe

Summary of Contract, Agreement, Amendment & Lease

All applicable fields to be completed by department (complete 1.b only if you are processing an amendment):

1.a Munis Contract:_____ Procurement # (RFP/ITB# If any):_____

Contractor: North Central New Mexico Economic Development District

Procurement Method/Vehicle: *Small Purchase* ☐ *RFP* ☐ *ITB* ☐ *Sole Source* ☐ *GSA* ☐ *Cooperative* ☐ Exempt ☑ SWPA/Existing ☐

Description/Title: Fiscal Agent Services for the City of Santa Fe

Contract: ○ Agreement: ○ Lease/Rent: ○ Amendment: ◉

Term Start Date: upon approval Term End Date: one month after reversion date Total Contract Amount: 1% of dollar amount expended

☒ Approved by Council *(If over the City Manager's approval threshold, you must go through GB)* 12/13/23

Contract / Lease:

1.b Amendment #: Two to the Original Contract/Lease # 23-0688

Increase/(Decrease) Amount $: 1% of dollar amount expended, approx. $3,200

Extend Expiration Date to: _____

☐ Approved by Council *(If the original went through GB, all amendments must go through GB regardless of the amendment reason)* Date:_____

Amendment is for: Adds services for three 2023 Junior Bill appropriations.

2. HISTORY of Contract, Amendments & Lease / Rent - Please Elaborate (option: attach spreadsheet if multiple amendments)

Original agreement item 23-0688 approved by GB on 12/13/23
Amendment one approved by GB on 3/13/24

3. Procurement History: Exempt NMSA 1978, 13-1-98A

_____ Apr 5, 2024

Purchasing Officer Review: Date:

Comment & Exceptions:_____

4. Funding Source: General Fund 100 **Org / Object:** 1001501.510300

Andy Hopkins Apr 5, 2024

Budget Officer Approval: Date:

Comment & Exceptions:_____

5. Grant History (if applicable): _____

Grants Administrator Approval:_____ **Date** _____

Staff Contact who Completed This Form: _____ Phone #:_____

To be recorded by City Clerk:
Clerk #_____ Email: _____
Date of Execution: _____

_____

ITT Representative (attesting that all information is reviewed) Title Date

DUTTON-LEYDA, TRAVIS K.

From: DUTTON-LEYDA, TRAVIS K.
Sent: Wednesday, March 6, 2024 9:21 AM
To: TAPIA, ERMINIA M.
Subject: RE: Amendment to Fiscal Agent Services agreement for NCNMEDD- for meetings next week 2/26 and 2/28

Government to government agreements are exempt per NMSA 1978, Section 13-1-98 A.

Thank you.

Regards,

Travis Dutton-Leyda
Chief Procurement Officer
City of Santa Fe
200 Lincoln Avenue
Santa Fe, NM 87501
505-629-8351
tkduttonleyda@santafenm.gov

https://santafenm.gov/finance-2/purchasing-1

Vision without action is merely a dream.
Action without vision passes the time.
Vision with action can change the world. ~ Joel A. Barker

Portion of Scope:
WHEREAS, the State of New Mexico appropriated funding for the purposes of improvements in the City of Santa Fe ("City") to the State of New Mexico, Department of Finance and Administration, Local Government Division, in the laws of Laws of 2021, Chapter 138, as detailed below ("Projects");

The purpose of this Agreement is for NCNMEDD to provide fiscal agent services in connection with the Projects as specifically appropriated under New Mexico Legislative Appropriation Agreements identified as follows:

NCNMEDD's services in support of the above purpose shall be to provide fiscal agency services associated with the Projects, including:

NCNMEDD Fiscal Agency Services:
Ensure that grant funds are expended in compliance with all applicable laws, regulations, and grant agreement and the transactions are

City of Santa Fe, New Mexico
memo

Date: **Wednesday, March 06, 2024**

To: **Travis Dutton-Leyda, Chief Procurement Officer**

From: **Erminia M. Tapia, Administrative Manager**

Subject: **Exemption Determination Request, NCNMEDD Fiscal Agent Services**

The Finance Department respectfully request exempt determination to be approved by the City's Chief Procurement Officer (CPO), Travis Dutton-Leyda, for the following scope of work (SOW):

NCNMEDD's services in support of the above purpose shall be to provide fiscal agency services associated with the Projects, including:

1. NCNMEDD Fiscal Agency Services:
Ensure that grant funds are expended in compliance with all applicable laws, regulations, and grant agreement and the transactions are appropriately accounted for in compliance with such laws, regulations, and grant agreement;

- Ensure safeguarding of grant funds and assets acquired with grant funds and proper accounting thereof in compliance with applicable laws, regulations, and grant agreement;

- Act as liaison between City and appropriate New Mexico state agencies as needed;

- Complete all required quarterly and financial reporting with information provided by City;

- Review and sign-off on project invoices to the appropriate State agency in a timely manner; and

- Work with the State on providing direct project reimbursements to City and act as a facilitator for such reimbursements as needed.

2. City Role and Responsibilities

City understands it remains ultimately responsible for executing and complying with all applicable laws, regulations, and grant agreement requirements such as flow down provisions, executing procurement responsibilities, and subcontractor management, as well as project, grant, and financial management.

City of Santa Fe follows the New Mexico State Procurement Code NMSA 1978, Sections 13-1-28 through 13-1-199 & City of Santa Fe Procurement Manual (CoSFPM).

NMSA 1978, Section 13-1-98 A / CoSFPM, Item VI. 1

Procurement of items of tangible personal property or services by the City from a state agency, a local public body or external procurement unit except as otherwise provided in NMSA 1978, §13-1-135 to §13- 1-137;

Amount: $60,000.00

Term: 06/30/2025

Approved Exemption



Travis Dutton-Leyda, Chief Procurement Officer

CITY OF SANTA FE

Date: November 6, 2024

To: Governing Body and Finance Committee

From: Larry Worstell, ITT Infrastructure Services Manager

Via: Eric Candelaria, ITT Department Director EC

Subject: Circuits Data Center

Vendor Name: Century Link Business/Lumen Technologies

Munis Vendor Number: 3590

ITEM AND ISSUE:

ITT Department respectfully requests your review and approval of a General Services Agreement in the total amount of $343,760 not to exceed for City data networks and Internet services fiber network between our Primary and Disaster Recovery data centers for a term of 36 Months with Century Link Business/Lumen Technologies.

CONTRACT NUMBER:

The FY25 Munis contract number is 3250299

BACKGROUND AND SUMMARY:

The ITT Department is requesting approval of the attached agreement called the Order Addendum. This addendum provides for our City data networks and Internet services fiber network between our Primary and Disaster Recovery data centers.

The Order Addendum is for the following circuits/services:

1) Fiber Circuits for the City's existing ANS Service to install at Big Byte Data Center.
2) Fiber Circuits for the City's existing SIP/Voice Complete Service to move them to Big Byte Data Center.
3) Professional Fiber Circuit Services
4) Fiber Wave circuit for Big Byte Data Center.

Lumen has bundled all 4 Circuit services under one addendum as the circuits are all terminated at the Big Byte Data Center.

The total costs of all agreements in the paperwork.

The costs are:

Monthly charges	$9,040.00
36-month contract on all circuits	$325,440.00
One time cost of Services	$18,320.00

Prior Approvals and Supporting Information:

PROCUREMENT METHOD:

The procurement method used was NMSA 1978, Section 13-1-129, Statewide Price Agreement

Chief Procurement Officer (CPO) / Designee: _____ **Date:** 11/12/2024
CPO Comment/Exceptions: NMSA 1978, Section 13-1-129 GSA - Not Statewide Price Agreement

FUNDING SOURCE:

Fund Name/Number: Other Department Services/620

Munis Org Name/Number: ITT Infrastructure Services/6203650

Munis Object Name/Number: Communication Services/514100

Budget Officer / Designee: _____ **Date:** 11/12/2024
Budget Officer Comment/Exceptions: _____

ASSOCIATED APPROVALS:

Does this purchase require any of the following associated approvals: ☐ Yes | ☐ No
(ITT, Vehicles/Fleet, Facilities, Asset, Grant Review)

IT Components included? ■ Yes | ☐ No
Approval: _____ **Title:** Director. IT **Date:** _____
Comment/Exceptions: _____

Vehicles included? ☐ Yes | ■ No
Approval: _____ **Title:** _____ **Date:** _____
Comment/Exceptions: _____

Construction, Facilities, Furniture, Fixtures, Equipment included? ☐ Yes | ☑ No
Approval: _____ **Title:** _____ **Date:** _____
Comment/Exceptions: _____

Capital Asset* or Project ☐ Yes | ☐ No**
Project Ledger #: _____
(*will this procurement result in a tangible item that costs more than $5,000?)
(**Capital Projects are new and improvement projects that are going to cost $10,000 or more)
Approval: _____ **Title:** _____ **Date:** _____
Comment/Exceptions: _____

Is this a Grant Funded Purchase? ☐ Yes | ☑ No
Approval: _____ **Title:** _____ **Date:** _____
Comment/Exceptions: _____

ATTACHMENTS:

Procurement Document: SWPA/Existing Contract

Vendor's Quote

Goods/General Services Contract

Horizons declination
CPO Service Determination Email
Department approval email from ITT, Fleet, or Facilities [pick one or more or delete]
Certificate of Liability Insurance (COI) (add City as an additional insured, project specifics, contact person, and primary project location)
Federally required forms (list all. Examples: SAM.gov check, etc.)
Original contract packet with previous contract amendments (if applicable)

Construction Contract Attachments:
Non-Collusion Affidavit of Subcontractor
Statement of Intent to pay prevailing wages
Affidavit of Wages Paid
Weekly Payroll Form
Payroll Statement of Compliance
Performance bond
Payment bond

City of Santa Fe, New Mexico
200 Lincoln Avenue, P.O. Box 909, Santa Fe, N.M. 87504-0909
www.santafenm.gov

Alan Webber, Mayor

Councilors:
Signe I. Lindell, Mayor Pro Tem, District 1
Renee Villarreal, District 1
Michael J. Garcia, District 2
Carol Romero-Wirth, District 2
Lee Garcia, District 3
Chris Rivera, District 3
Jamie Cassutt, District 4
Amanda Chavez, District 4

MEMORANDUM

Date: November 5, 2024

To: **Lumen Technologies**

Attn: **Larry Worstell, ITT Infrastructure Services Manager**

From: *Travis Dutton-Leyda, Chief Procurement Officer*, City of Santa Fe Purchasing Division
RE: GSA Contract **47QTCA20D077, Circuits Data Center**

The City of Santa Fe by mutual agreement between the City and **Lumen Technologies** is willing to enter into a GSA price agreement based on the following requirements:

1. Provide an updated Federal Supply Schedule to include current or updated contract dates.

2. *Purchases based on 13-1-129 (A)(1) NMSA 1978:* The Contractor is willing to extend their GSA pricing, terms and conditions to the City of Santa Fe at prices equal to or less than the contractor's current federal supply contract price (GSA), providing the contractor has indicated in writing a willingness to extend such contractor pricing, terms and conditions to the City of Santa Fe and the purchase order adequately identifies the contract relied upon.

Please respond by completing the information below. Check the proper box, fill in the requested information, including signature, scan and upload to the email you received with this request.

☑ **I agree to extend and/or renew the above referenced GSA price agreement.**

☐ **I DO NOT agree to extend and/or renew the above referenced GSA price agreement.**

Dan Sullivan, ACCOUNT DIRECTOR I - SLED	dan.sullivan@lumen.com
Print Name, Title	Email Address
Dan Sullivan	Lumen Technology Government Solutions, Inc. ("Lumen")
Signature	Company Name
11/5/2024	400 Tijeras Ave NW, Albuquerque NM 87102
Date	Address

Cc: Travis Dutton-Leyda, Chief Procurement Officer
Procurement File



General Services Administration Federal Supply

Authorized Federal Supply Service
Information Technology Schedule Price List
General Purpose Commercial Information Technology Equipment, Software and Services

Contract Number: 47QTCA20D0077.

Products and ordering information in this Authorized FSS Information Technology Schedule Pricelist are also available on the GSA *Advantage!* System. Agencies can browse GSA https://www.gsaadvantage.gov/advantage/main/start_page.do

For more information on ordering from Federal Supply Schedules click on the FSS Schedules button at fss.gsa.gov.

Confidential / Distribution restricted to Lumen Employees and Contractors under NDA

Approved Multiple Award Schedule (MAS) Special Item Numbers (SINs)

MAS SIN 33411 Purchase of New Electronic Equipment

MAS SIN 811212 Maintenance of Equipment, Repair Services and/or Repair/Spare Parts

MAS SIN 511210 Software Licenses

MAS SIN 518210C Cloud and Cloud-Related IT Professional Services

MAS SIN 611420 Information Technology Training

MAS SIN 54151S Information Technology Professional Services

MAS SIN 54151ECOM Electronic Commerce and Subscription Services

MAS SIN ANCILLARY Supplies and Services

Contract Number: 47QTCA20D0077
Period Covered by Contract: March 12, 2020, through March 11, 2025

Federal Supply Service
Authorized Federal Supply Schedule Price List
On-line access to contract ordering information, terms and conditions, up-to-date pricing, and the option to create an electronic delivery order are available through GSA *Advantage!*®, a menu-driven database system. The INTERNET address GSA *Advantage!*® is: GSAAdvantage.gov

Pricelist current through Modification Mod 107, 9/19/2024

Lumen Technologies Government Solutions, Inc.

4250 N. Fairfax Drive
Arlington, VA 22203

www.lumen.com
Contact: Shelley Rohleder
Senior Program Operations Manager
Email : Shelley.A.Rohleder@lumen.com
Phone : 913-312-2702
Fax : 703-363-3378

Products and ordering information in this Authorized FSS Information Technology Schedule Pricelist are also available on the GSA *Advantage!* System. Agencies can browse GSA https://www.gsaadvantage.gov/advantage/main/start_page.do

For more information on ordering from Federal Supply Schedules click on the FSS Schedules button at fss.gsa.gov.

Table of Contents

1.0 CUSTOMER INFORMATION 1

2.0 DEFINITION OF APPLICABLE SERVICE OFFERINGS AND TERMS & CONDITIONS 1

2.1 Multiple Award Schedule (MAS) SIN 511210: Definition of Service Offering and Terms & Conditions Applicable to Term Software Licenses for 1

2.1.1 Ciena Software 1
2.1.2 ARUBA Software 1

2.2 Multiple Award Schedule (MAS) SIN 518210C: Definition of Service Offering and Terms & Conditions Applicable to Cloud Computing Services 1

2.2.1 Lumen Federal Solutions Cloud Service Offering 1
2.2.2 Lumen Cloud Application Manager 6
2.2.3 Intact ReAccess 7

2.3 Multiple Award Schedule (MAS) SIN 54151ECOM: Definition of Service Offering and Terms & Conditions Applicable to Electronic Commerce Services 8

2.3.1 Uplogix 8
2.3.2 Lumen Distributed Denial of Service Mitigation Service Schedule 10
2.3.3 Lumen Hosted VoIP and IQ SIP Trunk 20
2.3.4 Lumen Hosted IVR 34
2.3.5 Lumen Interaction Routing (IR) 41
2.3.6 EZ Route 47
2.3.7 Lumen Hosted Area Network (HAN) Internet access. 48
2.3.8 Lumen Tailored Managed Network Services 48
2.3.9 Lumen Network Management Service (NMS) 51
2.3.10 Lumen IQ Networking 53
2.3.11 Lumen Dedicated Internet Access (DIA) 65
2.3.12 Voice Complete 69
2.3.13 Ethernet Line (E-Line) 75
2.3.14 eLynk 79
2.3.15 Voice T-1 81
2.3.16 Managed Network Service (Managed Router) 82
2.3.17 Wavelength Service 83
2.3.18 Telecommunications Service Priority (TSP) 86
2.3.19 IPVPN 86
2.3.20 E-LAN 90
2.3.21 Security Customer Premises Based Firewall (FW) 92
2.3.22 Security Non-Customer Premises Based Firewall (FW) 101
2.3.23 Managed Hosting Edge Hosting Environment (EHE) 110
2.3.24 Managed Server Foundation Hosting (FH) 118
2.3.25 Lumen Private Cloud on VMWare Cloud Foundation (VCF) 121
2.3.26 Lumen Edge Bare Metal 125
2.3.27 Lumen High Speed Internet Protocol 136
2.3.28 Lumen Metro Ethernet (ME) 139
2.3.29 Lumen Adaptive Network Security (ANS) 145
2.3.30 Cyxtera 153
2.3.31 Lumen Network Storage 154
2.3.32 Verge Technologies, Inc. SentientDB 157
2.3.33 Lumen Cloud Communications Service Schedule 158

2.4 Multiple Award Schedule (MAS) SIN Ancillary: Definition Of Service Offering and Terms & Conditions Applicable to Ancillary Supplies and Services 166

2.4.1 Ancillary Supplies & Services ADTRAN 166

3.0 PRICING 166

3.1 Multiple Award Schedule (MAS) SIN 33411 Purchase of Equipment Products and Pricing 166

Services not available everywhere. Business customers only. Lumen may change, cancel, or substitute products and services, or vary them by service area at its sole discretion without notice. ©2023 Lumen Technologies. All Rights Reserved.
Confidential / Distribution restricted to Lumen Employees and Contractors under NDA

3.1.1 ADTRAN Purchase of Equipment Products and Pricing 166
3.1.2 Hewlett Packard Enterprise (Aruba) Purchase of Equipment Products and Pricing 176
3.1.3 Uplogix Purchase of Equipment Products and Pricing 178
3.1.4 Ciena Purchase of Equipment Products and Pricing 179
3.2 Multiple Award Schedule (MAS) SIN 811212 Description of Maintenance, Repair Service, and Repair Parts/Spare Parts Products and Pricing 183
3.2.1 ADTRAN Maintenance and Repair 183
3.2.2 Aruba Maintenance and Repair 190
3.2.3 Uplogix Maintenance and Repair 191
3.2.4 Ciena Maintenance and Repair 191
3.3 Multiple Award Schedule (MAS) SIN 511210 Description of Software License 192
3.3.1 Ciena Software Licenses 192
3.3.2 Aruba Software Licenses 192
3.4 Multiple Award Schedule (MAS) SIN 518210C Cloud Computing Services Products and Pricing 193
3.4.1 Lumen Cloud Computing (CAM) 193
3.4.2 Intact ReAccess 194
3.5 Multiple Award Schedule (MAS) SIN 611420 Training Courses Products and Pricing 194
3.5.1 Adtran Training 194
3.6 Multiple Award Schedule (MAS) SIN 54151S Information Technology Professional Services and Pricing 195
3.6.1 Lumen Professional IT Services and Pricing 195
3.7 Multiple Award Schedule (MAS) SIN 54151ECOM Description of Electronic Commerce Services Products and Pricing 246
3.7.1 Lumen Distributed Denial of Service (DDoS) 246
3.7.2 Lumen Hosted VoIP 250
3.7.3 Lumen IQ SIP Trunk 252
3.7.4 Lumen Hosted IVR 252
3.7.5 Lumen Interaction Routing (IR) 253
3.7.6 Lumen EZRoute 254
3.7.7 Lumen HAN Internet (Access and Bandwidth) 254
3.7.8 Lumen Tailored Managed Network Services (TMNS) 255
3.7.9 Lumen Network Management Service (NMS) 257
3.7.10 Lumen IQ Networking 257
3.7.11 Dedicated Internet Access (DIA) 260
3.7.12 Voice Complete 262
3.7.13 Ethernet Line (E-Line) 262
3.7.14 eLynk 290
3.7.15 Voice T-1 292
3.7.16 Managed Router 292
3.7.17 Wavelengths 293
3.7.18 Telecommunications Service Priority (TSP) 295
3.7.19 IPVPN 295
3.7.20 E-LAN 296
3.7.21 Customer Premises Based Firewall 317
3.7.22 Non-Customer Premises Based Firewall 333
3.7.23 Managed Hosting Edge Hosting Environment (EHE) 344
3.7.24 Managed Server Foundation Hosting (FH) 344
3.7.25 Lumen Private Cloud on VMWare Cloud Foundation (VCF) 346
3.7.26 Lumen Edge Bare Metal 346
3.7.27 Lumen High Speed Internet Protocol Services (HSIP) 347
3.7.28 Lumen Metro Ethernet (ME) Services 348
3.7.29 Lumen Adaptive Network Security (ANS) Services 348

Services not available everywhere. Business customers only. Lumen may change, cancel, or substitute products and services, or vary them by service area at its sole discretion without notice. ©2023 Lumen Technologies. All Rights Reserved.
Confidential / Distribution restricted to Lumen Employees and Contractors under NDA

3.7.30 Cyxtera....351
3.7.31 Lumen Network Storage (LNS)....355
3.7.32 Verge SentientDB....355
3.7.33 Lumen Cloud Communications....355
3.8 Multiple Award Schedule (MAS) SIN Ancillary Supplies and Services And Pricing....360
3.8.1 ADTRAN Products and Pricing....360
3.8.2 Ciena Products and Pricing....361

Services not available everywhere. Business customers only. Lumen may change, cancel, or substitute products and services, or vary them by service area at its sole discretion without notice. ©2023 Lumen Technologies. All Rights Reserved.
Confidential / Distribution restricted to Lumen Employees and Contractors under NDA

1.0 CUSTOMER INFORMATION

1a. Awarded MAS SINs

MAS SIN 33411 PURCHASE OF NEW EQUIPMENT

FSC Class 5805 – TELEPHONE AND TELEGRAPH EQUIPMENT Audio and Video Teleconferencing Equipment

NOTE: Installation must be incidental to, in conjunction with and in direct support of the products sold under MAS SIN 33411 of this contract and cannot be purchased separately. If the construction, alteration or repair is segregable and exceeds $2,000, then the requirements of the Davis-Bacon Act apply.

MAS SIN 811212 MAINTENANCE OF EQUIPMENT, REPAIR SERVICES AND/OR REPAIR/SPARE PARTS

(FPDS Code J070 – Maintenance and Repair Service) (Repair Parts/Spare Parts – See FSC Class for basic equipment): Maintenance, Repair Service, Repair Parts/Spare Parts

MAS SIN 511210 SOFTWARE LICENSES

FSC CLASS 7030 – INFORMATION TECHNOLOGY SOFTWARE

Includes operating system software, application software, EDI translation and mapping software, enabled E-Mail message-based products, Internet software, database management programs, and other software. Software maintenance as a product includes the publishing of bug/defect fixes via patches and updates/upgrades in function and technology to maintain the operability and usability of the software product. It may also include other no charge support that is included in the purchase price of the product in the commercial marketplace. No charge process includes items such as user blogs, discussion forums, on-line help libraries and FAQs (Frequently Asked Questions), hosted chat rooms, and limited telephone, email and/or web-based general technical support for users self-diagnostics.

MAS SIN 518210C CLOUD AND CLOUD-RELATED IT PROFESSIONAL SERVICES—SUBJECT TO COOPERATIVE PURCHASING

Includes commercially available cloud computing services such as Infrastructure as a Service (IaaS), Platform as a Service (PaaS), and Software as a Service (SaaS) and emerging cloud services.

MAS SIN 611420 TRAINING COURSES FOR INFORMATION TECHNOLOGY EQUIPMENT AND SOFTWARE

(FPDS Code U012)

MAS SIN 54151S INFORMATION TECHNOLOGY (IT) PROFESSIONAL SERVICES

FPDS Code D301: IT Facility Operation and Maintenance
FPDS Code D307: Automated Information Systems Design and Integration Services

NOTE 1: All non-professional labor categories must be incidental to and used solely to support hardware, software and/or professional services, and cannot be purchased separately.

NOTE 2: Offerors and Agencies are advised that the Group 70—Information Technology Schedule is not to be used to procure services which properly fall under the Brooks Act. These services include, but are not limited to, architecture, engineering, mapping, cartographic production, remote sensing, geographic information systems, and related services. FAR 36.6 distinguishes between mapping services of an A/E nature and mapping services which are not connected nor incidental to the traditionally accepted A/E Services.

NOTE 3: This solicitation is not intended to solicit for the reselling of IT Professional Services, except for the provision of implementation, maintenance, integration, or training services in direct support of a product. Under such circumstances the services must be performed by the publisher or manufacturer or one of their authorized agents.

MAS SIN 54151ECOM ELECTRONIC COMMERCE (EC) ANS SUBSCRIPTION SERVICES

FPDS Code D304: Value Added Network Services (VANs)
FPDS Code D304: E-Mail Services
FPDS Code D304: Internet Access Services

Services not available everywhere. Business customers only. Lumen may change, cancel, or substitute products and services, or vary them by service area at its sole discretion without notice. ©2024 Lumen Technologies. All Rights Reserved.
Confidential / Distribution restricted to Lumen Employees and Contractors under NDA

FPDS Code D399: Other Data Transmission Services, Not Elsewhere Classified—Except "Voice" and Pager Services

NOTE: Electronic Commerce Services are not intended to supersede or be substitute for any voice requirements of FTS2001.

1b. Identification of the lowest priced model number and lowest unit price for that model for each special item number awarded in the contract.

MAS SIN	Sub SIN	Product Name	Part #	Product Description	Lumen or Supplier	GSA Price with IFF
33411	132-8.5975	**ADTRAN**	1100ALR2101WIF1	ADTRAN—ProStart Remote installation for a blue socket Access Point (1800, 1840, 1920, 1925, 1930, 1935, 2030, 2035). This part number must be purchased in conjunction with either the ProStart Remote Installation for Blue socket vWLAN or the ProStart Remote Installation for Blue socket vWLAN with ProCloud Wi-Fi. Part number includes remote configuration, testing, and turn up support of a BSAP. Includes 14 calendar day labor warranty. ADTRAN ProStart support is delivered during normal business hours, 8 am -5pm site time, Monday through Friday. If you require ProStart Installation support for AP expansion of an existing network, contact prostart@adtran.com for a custom quote.	**ADTRAN**	$9.06
811212	132-12.2633	**Ciena 80M-MCPBA-COM**	**80M-MCPBA-COM**	**MCP BASE SW, COMPREHENSIVE SUPPORT**	Ciena	$1.15
511210	132-32.88	**Ciena S74-LIC-NTK569MU**	**S74-LIC-NTK569MU**	**6500 REL 12.7 SOFTWARE LICENSE**	**Ciena**	**$0.40**
518210C	132-40.136	Cloud Application Manager BYOC	132-40.136	Cloud Application Manager (CAM). Lumen Platform & Bring Your Own Cloud Provider (BYOC). Application Lifecycle Management. Per instance/hour metering. Required: Additional Purchase Lumen Led Cloud Support (LLCS).	Lumen	$0.06
611420	132-50.0012	I&M Atlas Prod IN Ded and SWT Training	1600ATLAS01E	ADTRAN—Installation & Maintenance, Atlas Products Installation Dedicated and Switched Training; 3-day course; Per Person pricing	ADRAN	$1,086.59
54151S	QGSI-PS37	Hardware Specialist	QGSI-PS37	Partner in a team environment or be able to independently install, repair, and perform preventative maintenance, (including upgrades and backups) of computer systems. May resolve hardware, software, network, and application problems.	Lumen	$51.59
54151ECOM	132-52.9387	Voice Features DID Number Assignment and Maintenance	132-52.9387	DID Number Assignment and Maintenance	Lumen	$0.01
Ancillary	132-100.211	Ciena 495-0000-001	495-0000-001	FREIGHT/HANDLING CHARGES	Ciena	$1.15

1c. See Pricing for Details

2. Maximum Order (All dollar amounts are exclusive of any discount for prompt payment.)

- The Maximum Order value for the following Multiple Award Schedule (MAS) Special Item Numbers (SINs) is $500,000:
  - MAS SIN 33411—Purchase of Equipment
  - MAS SIN 811212—Maintenance, Repair Service and Repair Parts/Spare Parts
  - MAS SIN 511210—Term Software Licenses
  - MAS SIN 518210C—Cloud Computing Services
  - MAS SIN 54151S—Information Technology (IT) Professional Services
  - MAS SIN 54151ECOM—Electronic Commerce (EC) Services
- The Maximum Order value for the following MAS SIN is $25,000:
  - MAS SIN 611420—Training Courses

Services not available everywhere. Business customers only. Lumen may change, cancel, or substitute products and services, or vary them by service area at its sole discretion without notice. ©2024 Lumen Technologies. All Rights Reserved.
Confidential / Distribution restricted to Lumen Employees and Contractors under NDA

3. Minimum Order

The minimum dollar value of orders to be issued is $100.

4. Geographic Scope of Contract

The Geographic Scope of Contract will be domestic delivery only. Domestic delivery is delivery within the 48 contiguous states, Alaska, Hawaii, Puerto Rico, Washington, DC, and U.S. Territories. Domestic delivery also includes a port or consolidation point, within the aforementioned areas, for orders received from overseas activities.

5. Points of Production

6. Prices Shown Herein are Net (discount deducted)

7. Quantity Discounts

None

8. Prompt Payment Terms

0% - NET 30 days from receipt of invoice or date of acceptance, whichever is later

9a. Government Purchase Cards Below Micro Purchase

Contractors are required to accept the Government purchase card for payments equal to or less than the micro purchase threshold for oral or written delivery orders.

9b. Government Purchase Cards Above Micro Purchase

Government purchase cards will be acceptable for payment above the micro-purchase threshold. In addition, bank account information for wire transfer payments will be shown on the invoice.

10. Foreign Items

11a. Time of Delivery

The Contractor shall deliver to destination within the number of calendar days after receipt of order (ARO), as set forth below:

SPECIAL ITEM NUMBER	DELIVERY TIME (Days ARO)
All	30 Days

11b. Expedited Delivery

When the Federal Supply Schedule contract delivery period does not meet the bona fide urgent delivery requirements of an ordering agency, agencies are encouraged, if time permits, to contact the Contractor for the purpose of obtaining accelerated delivery. The Contractor shall reply to the inquiry within 3 workdays after receipt. (Telephonic replies shall be confirmed by the Contractor in writing.) If the Contractor offers an accelerated delivery time acceptable to the ordering agency, any order(s) placed pursuant to the agreed upon accelerated delivery time frame shall be delivered within this shorter delivery time and in accordance with all other terms and conditions of the contract.

11c. Overnight and 2 Day Delivery

The schedule customer may contact the Contractor for rates for overnight and 2-day delivery.

11d. Urgent Requirements

When the Federal Supply Schedule contract delivery period does not meet the bona fide urgent delivery requirements of an ordering agency, agencies are encouraged, if time permits, to contact the Contractor for the purpose of obtaining accelerated delivery. The Contractor shall reply to the inquiry within 3 workdays after receipt. (Telephonic replies shall be confirmed by the Contractor in writing.) If the Contractor offers an accelerated delivery time acceptable to the ordering agency, any order(s) placed pursuant to the agreed upon accelerated delivery time frame shall be delivered within this shorter delivery time and in accordance with all other terms and conditions of the contract.

12. F.O.B. Point(s).

Services not available everywhere. Business customers only. Lumen may change, cancel, or substitute products and services, or vary them by service area at its sole discretion without notice. ©2024 Lumen Technologies. All Rights Reserved.
Confidential / Distribution restricted to Lumen Employees and Contractors under NDA

13a. Ordering address:

Lumen Technologies Government Solutions, Inc.
4250 N. Fairfax Drive
Arlington, VA 22203-1665

The following telephone number can be used by ordering agencies to obtain technical and/or ordering assistance: Shelley Rohleder, 913-213-5299.

13b. Ordering Instructions

Ordering activities shall use the ordering procedures of Federal Acquisition Regulation (FAR) 8.405 when placing an order or establishing a BPA for supplies or services. These procedures apply to all schedules.

a. FAR 8.405-1 Ordering procedures for supplies, and services not requiring a statement of work.
b. FAR 8.405-2 Ordering procedures for services requiring a statement of work.

14. Payment Address:

Lumen Technologies Government Solutions, Inc.
P.O. Box 52187
Phoenix, Arizona 85072-2187

15. CONTRACTOR COMMITMENTS, WARRANTIES AND REPRESENTATIONS

a. For this contract, commitments, warranties, and representations includes, in addition to those agreed to for the entire schedule contract:
   (1) Time of delivery/installation quotations for individual orders.
   (2) Technical representations and/or warranties of products concerning performance, total system performance and/or configuration, physical, design and/or functional characteristics and capabilities of a product/equipment/ service/software package submitted in response to requirements which result in orders under this schedule contract.
   (3) Any representations and/or warranties concerning the products made in any literature, description, drawings and/or specifications furnished by the Contractor.
b. The above is not intended to encompass items not currently covered by the GSA Schedule contract.

16. Export Packing Charges

17. Terms and conditions of Government purchase card acceptance (any thresholds above the micro-purchase level).

18. Terms and conditions of rental, maintenance, and repair (if applicable).

19. Terms and conditions of installation (if applicable).

20. Terms and conditions of repair parts indicating date of parts price lists and any discounts from list prices (if applicable).

20a. Terms and conditions for any other services (if applicable).

21. List of service and distribution points (if applicable).

22. List of participating dealers (if applicable).

23. Preventive maintenance (if applicable).

Services not available everywhere. Business customers only. Lumen may change, cancel, or substitute products and services, or vary them by service area at its sole discretion without notice. ©2024 Lumen Technologies. All Rights Reserved.
Confidential / Distribution restricted to Lumen Employees and Contractors under NDA

24a. **Special attributes such as environmental attributes (e.g., recycled content, energy efficiency, and/or reduced pollutants).**

24b. **If applicable, indicate that Section 508 compliance information is available on Electronic and Information Technology (EIT) supplies and services and show where full details can be found (e.g. contractor's website or other location.) The EIT standards can be found at: www.Section508.gov/.**

25. **Data Universal Numbering System (DUNS) Number: 178617031**

26. **Contractor has registered with the Central Contractor Registration Database.**

Services not available everywhere. Business customers only. Lumen may change, cancel, or substitute products and services, or vary them by service area at its sole discretion without notice. ©2024 Lumen Technologies. All Rights Reserved.
Confidential / Distribution restricted to Lumen Employees and Contractors under NDA

ORDER ADDENDUM

This **ADDENDUM TO CUSTOMER ORDER** ("Addendum") is entered into as of the last date of signature below (the "Addendum Effective Date"), by and between **Lumen Technology Government Solutions, Inc.** ("Lumen") and **City of Santa Fe** ("Customer"), and modifies the Customer Order with **SM10650391/R694949, SM10650373/R694953, R701684/59508228, R573499/58967262** (the "Customer Order"), a copy of which is attached hereto as EXHIBIT A. Lumen and Customer may be referred to herein collectively as the "Parties" and individually as a "Party."

WHEREAS the Parties wish to modify the Customer Order to incorporate revised terms applicable to the same.

NOW THEREFORE, the Parties agree to modify the Customer Order in the following limited respects:

1. **Order Submittal.** Contemporaneously with the execution of this Addendum, Customer shall execute and deliver the Customer Order to Lumen.

2. **Section 4**. The Parties acknowledge and agree that Section 4 in the terms and conditions is replaced with the following:

"4. Customer places this Order by signing (including electronically or digitally) or otherwise acknowledging (in a manner acceptable to Lumen) this document and returning it to Lumen. The Service identified in this Order shall be governed by and subject to the contract number **47QTCA20D0077** between GSA and Qwest Government Services, Inc. Customer agrees to the terms and conditions set forth in the Schedule 70 contract between Qwest Government Services, Inc. and GSA and hereby confirms that it will follow the cooperative purchasing requirements set out by GSA. The service level agreement(s) for the Service(s) contained in this Order are subject to Lumen's standard Service Schedule(s) (as of the date of this Order), a copy of which are available upon request. Services contained within this Order that are not contained on the Schedule 70 contract shall be governed by and subject to the Master Service Agreement(s) and Service Schedule(s) (if any) between Lumen and Customer for those Service(s) not contained on the Schedule 70 contract applicable to such Service(s). The applicable agreement may be between Customer and Lumen's affiliate if expressly provided for under such affiliate Master Service Agreement. If Customer has not executed a Master Services Agreement with Lumen but has executed a services agreement (including but not limited to Standard Terms and Conditions) with an affiliate of Lumen ("Affiliate Agreement"), then the terms of the most recent such Affiliate Agreement shall apply to the Service herein (to the extent not inconsistent with this Order) provided that in such cases, the current standard Lumen Service Schedule applicable to the Services shall apply. In the event that Lumen and Customer have not executed a Master Service Agreement and/or applicable Service Schedule(s) with respect to such Service and have not executed an Affiliate Agreement, (i) Lumen's standard Master Service Agreement/Service Schedule(s) (as of the date of this Order) shall govern, a copy of which are available upon request and (ii) the Lumen contracting party shall be the Lumen entity invoicing such Services. Notwithstanding anything in any Affiliate Agreement to the contrary, Lumen's acceptance of this Order will be evidenced by (and this Order will be binding on both parties upon) the earlier of Lumen's written delivery of a Customer Commit Date ("CCD") (i.e. the projected installation date) or Lumen's delivery of the requested Service, and, at the end of the Service Term the Services set forth herein shall renew on a month to month basis, terminable by either party with 30 days' advanced written notice and the rates are subject to change upon 30 days' notice from Lumen. "Affiliate Agreement" for CenturyLink Communications. LLC d/b/a Lumen Technologies Group ("Lumen") or any companies that were affiliates of Lumen before the merger between CenturyLink, Inc. and Level 3 Communications, Inc. means only an applicable Interexchange Carrier network agreement (e.g. CenturyLink Total Advantage Agreement, CenturyLink Total Advantage Express Agreement, CenturyLink Wholesale Services Agreement or CenturyLink Master Service Agreement) for non-government customers. In the event of a Lumen Affiliate Agreement, (a) Lumen will deliver a written or electronic notice that the Service is installed (a "Connection Notice"), at which time billing will commence, and (b) if Customer cancels or terminates Service for any reason other than Lumen's uncured default or if Lumen terminates due to Customer's uncured default, Customer shall pay Lumen's standard early termination liability charges as identified in Lumen's ancillary charge summary, a copy of which is available upon request."

3. **Limitation**. This Addendum shall apply to the Customer Order and shall have no applicability to any other Customer Order(s) that Customer may have submitted or may submit to Lumen in the future.

These terms and conditions have been read, are understood, and are hereby accepted as of the Addendum Effective Date.

LUMEN TECHNOLOGY GOVERNMENT SOLUTIONS, INC.
("Lumen")

By: Alex Khanin
Alex Khanin (Oct 22, 2024 14:19 MDT)

Name: Alex Khanin

Title: Manager Offer Management

Date: Oct 22, 2024

City of Santa Fe
("Customer")

By: _____

Name: _____

Title: _____

Date: _____

OMR# **R701684, R573499, R694949, R694953**

OMR# **R701684, R573499, R694949, R694953**

EXHIBIT A

THE CUSTOMER ORDER

[SEE ATTACHED]

R701684 City of Santa Fe 6.20.24
QC Wave Table for GSA Cover Letter

CAR L341567 **Following prices requires a Minimum Service Period of 36 Months**

Circuit Type	Service Element	Quantity (# of rate ele-ments / miles)	Originating Location (address, city, state)	Terminating Location (address, city, state)	Design Type	Term	MRC per Rate Element / Miles	Total MRC	Total NRC
10 Gbps LAN PHY – Unprotected	Optical Channel	2	715 Alta Vista St, Santa Fe, NM, 87505	123 Central Ave NW, Albuquerque, NM, 87102	10 Gbps LAN PHY – Unprotected	36 Months	$1,000.00 Per Optical Channel	$2,000.00	$0.00
10 Gbps LAN PHY – Unprotected	Mileage	56	715 Alta Vista St, Santa Fe, NM, 87505	123 Central Ave NW, Albuquerque, NM, 87102	10 Gbps LAN PHY – Unprotected	36 Months	$10.00 Per Mile	$560.00	$0.00
10 Gbps LAN PHY – Unprotected	Optical Channel	2	715 Alta Vista St, Santa Fe, NM, 87505	123 Central Ave NW, Albuquerque, NM, 87102	10 Gbps LAN PHY – Unprotected	36 Months	$1,000.00 Per Optical Channel	$2,000.00	$0.00
10 Gbps LAN PHY – Unprotected	Mileage	56	715 Alta Vista St, Santa Fe, NM, 87505	123 Central Ave NW, Albuquerque, NM, 87102	10 Gbps LAN PHY – Unprotected	36 Months	$10.00 Per Mile	$560.00	$0.00
	Avoidance	1	715 Alta Vista St, Santa Fe, NM, 87505	123 Central Ave NW, Albuquerque, NM, 87102	Unprotected	36 Months	$20.00	$20.00	$0.00
							Total	$5,140.00	$0.00

Customer Information and Contract Specifications

Customer Name: City of Sante Fe - NM
Account Number: 3-A72803

Currency: USD
Monthly Recurring Charges (MRC): $1,449.00
Non Recurring Charges (NRC): 0

Service Order

Service Address	Description	Order Type	Term (Months)	Qty	Unit MRC	Unit NRC	Total MRC	Total NRC
123 CENTRAL AVE NW ALBUQUERQUE NEW MEXICO 87102 3408 UNITED STATES	**IP VPN Port and Access** - Standard Delivery - To the MPoE (Customer Provided)	New	36	1	$0.00	$0.00	$0.00	$0.00
	Port - 10GIG-E WAVE			1	$0.00	$0.00	$0.00	$0.00
	Transport	New	36	1			$1,000.00	$0.00
	Subtotal						**$1,000.00**	**$0.00**
123 CENTRAL AVE NW ALBUQUERQUE NEW MEXICO 87102 3408 UNITED STATES	**IP VPN Logical Interface (1 Gbps CIR, Flat Rate)** - Class of Service = Single: Premium Plus - Committed Information Rate (CIR) = 1 Gbps	New	36	1	$449.00	$0.00	$449.00	$0.00
	Subtotal						**$449.00**	**$0.00**
	Totals						**$1,449.00**	**$0.00**

*If the Service Address column above is blank, no Service Address is required for the Service or the Service Address is identified as a data center in the Description column.

SLED Terms and Conditions Governing This Order

1.“Lumen” is defined for purposes of this Order as CenturyLink Communications, LLC d/b/a Lumen Technologies Group or its affiliated entities providing Services under this Order. The Lumen entity providing Services is identified on the invoice. This Order is subject to the applicable state or municipal public records laws governing Customer and is non-binding until accepted by Lumen, as set forth in section 4. Customer places this Order by signing or otherwise acknowledging (in a manner acceptable to Lumen) this document and returning it to Lumen. Pricing is valid for 90

calendar days from the date indicated unless otherwise specified.

2. Prior to installation, Lumen may notify Customer in writing (including by e-mail) of price increases due to off-net vendors or increased construction costs. Customer has 5 business days following notice to cancel this Order without liability; or otherwise, Customer is deemed to accept the increase.

3. If a generic demarcation point (such as a street address) is provided, the demarcation point for on-net services will be Lumen's Minimum Point of Entry (MPOE) at such location (as determined by Lumen). Off-net demarcation points will be the off-net vendor's MPOE. If this Order identifies aspects of services that are procured by Customer directly from third parties, Lumen is not liable for such services.

4. The service(s) identified in this Order (the "Service(s)") is/are subject to the current, unexpired services agreement between Customer and Lumen ("Existing Agreement") provided if a service attachment describing the Services is not included in the Existing Agreement, then the current standard applicable Lumen Service Attachment(s) will apply in addition to the Existing Agreement. If Customer and Lumen do not have a current Existing Agreement,Services are subject to Lumen's standard Master Service Agreement(s), State, Local and Education Government Agencies Version, Public Safety Version for public safety services, or E-Rate Version for E-Rate eligible services (each, a "Lumen MSA"), and applicable Service Attachment(s) for the Services described in this Order will govern, copies of which are available at https://www.lumen.com/en-us/about/legal/business-customer-terms-conditions.html or upon request, unless Customer has executed a service agreement with Lumen or one of its affiliates applicable to the Services on this Order. In that case, the most recent service agreement will apply to the extent not inconsistent with this Order and the current Service Schedule(s) will apply and is/are specifically incorporated into the applicable agreement by this reference. Customer will accept and pay all charges indicated on invoices for the Services.

Notwithstanding anything to the contrary, Lumen will notify Customer of acceptance of requested Service in this Order by delivering (in writing or electronically) the date by which Lumen will install Service (the "Customer Commit Date"), by delivering the Service, or by the manner described in a Service Schedule. Lumen will deliver a written or electronic notice that the Service is provisioned, at which time billing will commence. At the expiration of the Service Term, Service will continue month-to-month at the existing rates, subject to change by Lumen on 30 days' written notice. If the service agreement or applicable service specific terms do not include cancellation or early termination charges and if Customer cancels or terminates Service for any reason other than Lumen's uncured default or if Lumen cancels or terminates or cause, then Customer will pay Lumen's standard cancellation or early termination liability charges in the current standard Lumen MSA.

5. Neither party will be liable for any damages for lost profits, lost revenues, loss of goodwill, loss of anticipated savings, loss of data or cost of purchasing replacement service, or any indirect, incidental, special, consequential, exemplary or punitive damages arising out of the performance or failure to perform under this Order. Customer's sole remedies for any nonperformance, outages, failures to deliver or defects in Service are contained in the service levels applicable to the affected Service.

6. Transport services ordered from Lumen will be treated as interstate for regulatory purposes except as otherwise agreed to in writing.

7. Charges for certain Services are subject to (a) a monthly property tax surcharge and (b) a monthly cost recovery fee per month to reimburse Lumen for various governmental taxes and surcharges. Such charges are subject to change by Lumen and will be applied regardless of whether Customer has delivered a valid tax exemption certificate. For additional details on taxes and surcharges that are assessed, visit http://www.lumen.com/taxes.

8. Unless otherwise set forth in a Service Attachment, Customer will pay Lumen's standard ancillary charges for expedites and additional activities, features, or options as set forth in the Ancillary Fee Schedule, available at http://www.lumen.com/ancillary-fees. If Lumen cannot complete installation due to Customer delay or inaction, Lumen

may begin charging Customer and Customer will pay such charges.

9. For colocation, data center and/or hosting services, pre-arranged escorted access may be required at certain locations, and cross connect services are subject to whether facilities are available at the particular location to complete the connection.

10. Compliance with Laws. The parties comply with all laws and regulations applicable to the execution of this Order and to the provision of Services by Lumen, including, as applicable, procurement laws or regulations regarding cumulative purchases of Services by Customer.

11. E-Rate and/or RHC/HCF Funding. If Customer applies for or seeks E-Rate and/or RHC/HCF funding for the Service(s) to be provided under this Order, Customer's Service(s) will be governed by a current eligible Existing Agreement, or if Customer and Lumen do not have a current eligible Existing Agreement, the Lumen E-Rate MSA or Lumen SLED MSA with the E-Rate and/or RHC/HCF Program Addendum will apply and must be executed contemporaneously with this Order.

12. If your network service utilizes TDM technologies, then the following applies: (a) During the Service Term and on 60 days' prior written notice, Lumen may re-provision Customer's off-net TDM services ("Service Re-provision"). If Customer objects to the Service Re-provision, Customer may terminate the affected service by notifying Lumen in writing within 30 days of the date of the Service Re-provision notification; and (b) During the Service Term, Lumen may increase rates for off-net TDM services. Lumen will provide Customer 60 days' prior written notice before implementing the increase ("Rerate Notice"). If Customer objects to the increase, Customer must notify Lumen in writing within 30 days of the date of the Rerate Notice whether Customer will (i) receive the affected service on a month-to-month basis or (ii) terminate the affected service, subject to early termination liability charges. Under subsection (ii), Customer's requested disconnect date must be within 90 days of the Rerate Notice. Unless Customer so notifies Lumen, the affected service will continue to be provided at the increased rates. If Customer does not respond to the Rerate Notice, the affected service will continue to be provided at the increased rates set forth in the Rerate Notice.

13. Infrastructure Investment and Jobs Act (IIJA) Grant Programs. If Customer participates in an IIJA program, including but not limited to, the Middle Mile Grant, Tribal Connectivity Broadband, and the Broadband Equity Access and Deployment (BEAD) Grant Programs, then Customer cannot pay for Services with funds obtained through the IIJA or other similar grants that would obligate Lumen to provide certain information or perform certain regulatory compliance functions, unless each of those functions and obligations is explicitly identified and agreed to by the parties in the Agreement or in an amendment to the Agreement.

Additional Order Terms

Invoices

Single prices shown above for bundled Services, or for Services provided at multiple locations, will be allocated among the individual services for the purpose of applying Taxes and regulatory fees and also may be divided on Customer's invoice by location served.

Activation Support

If requested by Customer, and for an additional charge, Lumen will provide assistance with activating and/or configuring equipment on Customer's side of the Demarcation Point ("Activation Support").

Signature Block

Customer: City of Sante Fe - NM
Signature:
Name: Alan Webber
Title: Mayor
Date:

Customer and the individual signing above represent that such individual has the authority to bind Customer to this Agreement.

Document Generation Date: 07-02-2024

Customer Information and Contract Specifications

Customer Name: City of Sante Fe - NM
Account Number: 3-A72803

Currency: USD
Monthly Recurring Charges (MRC): $1,200.00
Non Recurring Charges (NRC): 0

Service Order

Service Address	Description	Order Type	Term (Months)	Qty	Unit MRC	Unit NRC	Total MRC	Total NRC
123 CENTRAL AVE NW ALBUQUERQUE NEW MEXICO 87102 3408 UNITED STATES	**IP VPN Port and Access** - Standard Delivery - To the MPoE (Customer Provided)	New	36	1	$0.00	$0.00	$0.00	$0.00
	Port - 1 Gbps			1	$0.00	$0.00	$0.00	$0.00
	Transport	New	36	1			$940.00	$0.00
	Subtotal						**$940.00**	**$0.00**
123 CENTRAL AVE NW ALBUQUERQUE NEW MEXICO 87102 3408 UNITED STATES	**IP VPN Logical Interface (100 Mbps CIR, Flat Rate)** - Class of Service = Single: Premium Plus - Committed Information Rate (CIR) = 100 Mbps	New	36	1	$260.00	$0.00	$260.00	$0.00
	Subtotal						**$260.00**	**$0.00**
	Totals						**$1,200.00**	**$0.00**

*If the Service Address column above is blank, no Service Address is required for the Service or the Service Address is identified as a data center in the Description column.

SLED Terms and Conditions Governing This Order

1.“Lumen” is defined for purposes of this Order as CenturyLink Communications, LLC d/b/a Lumen Technologies Group or its affiliated entities providing Services under this Order. The Lumen entity providing Services is identified on the invoice. This Order is subject to the applicable state or municipal public records laws governing Customer and is non-binding until accepted by Lumen, as set forth in section 4. Customer places this Order by signing or otherwise acknowledging (in a manner acceptable to Lumen) this document and returning it to Lumen. Pricing is valid for 90

calendar days from the date indicated unless otherwise specified.

2. Prior to installation, Lumen may notify Customer in writing (including by e-mail) of price increases due to off-net vendors or increased construction costs. Customer has 5 business days following notice to cancel this Order without liability; or otherwise, Customer is deemed to accept the increase.

3. If a generic demarcation point (such as a street address) is provided, the demarcation point for on-net services will be Lumen's Minimum Point of Entry (MPOE) at such location (as determined by Lumen). Off-net demarcation points will be the off-net vendor's MPOE. If this Order identifies aspects of services that are procured by Customer directly from third parties, Lumen is not liable for such services.

4. The service(s) identified in this Order (the "Service(s)") is/are subject to the current, unexpired services agreement between Customer and Lumen ("Existing Agreement") provided if a service attachment describing the Services is not included in the Existing Agreement, then the current standard applicable Lumen Service Attachment(s) will apply in addition to the Existing Agreement. If Customer and Lumen do not have a current Existing Agreement,Services are subject to Lumen's standard Master Service Agreement(s), State, Local and Education Government Agencies Version, Public Safety Version for public safety services, or E-Rate Version for E-Rate eligible services (each, a "Lumen MSA"), and applicable Service Attachment(s) for the Services described in this Order will govern, copies of which are available at https://www.lumen.com/en-us/about/legal/business-customer-terms-conditions.html or upon request, unless Customer has executed a service agreement with Lumen or one of its affiliates applicable to the Services on this Order. In that case, the most recent service agreement will apply to the extent not inconsistent with this Order and the current Service Schedule(s) will apply and is/are specifically incorporated into the applicable agreement by this reference. Customer will accept and pay all charges indicated on invoices for the Services.

Notwithstanding anything to the contrary, Lumen will notify Customer of acceptance of requested Service in this Order by delivering (in writing or electronically) the date by which Lumen will install Service (the "Customer Commit Date"), by delivering the Service, or by the manner described in a Service Schedule. Lumen will deliver a written or electronic notice that the Service is provisioned, at which time billing will commence. At the expiration of the Service Term, Service will continue month-to-month at the existing rates, subject to change by Lumen on 30 days' written notice. If the service agreement or applicable service specific terms do not include cancellation or early termination charges and if Customer cancels or terminates Service for any reason other than Lumen's uncured default or if Lumen cancels or terminates or cause, then Customer will pay Lumen's standard cancellation or early termination liability charges in the current standard Lumen MSA.

5. Neither party will be liable for any damages for lost profits, lost revenues, loss of goodwill, loss of anticipated savings, loss of data or cost of purchasing replacement service, or any indirect, incidental, special, consequential, exemplary or punitive damages arising out of the performance or failure to perform under this Order. Customer's sole remedies for any nonperformance, outages, failures to deliver or defects in Service are contained in the service levels applicable to the affected Service.

6. Transport services ordered from Lumen will be treated as interstate for regulatory purposes except as otherwise agreed to in writing.

7. Charges for certain Services are subject to (a) a monthly property tax surcharge and (b) a monthly cost recovery fee per month to reimburse Lumen for various governmental taxes and surcharges. Such charges are subject to change by Lumen and will be applied regardless of whether Customer has delivered a valid tax exemption certificate. For additional details on taxes and surcharges that are assessed, visit http://www.lumen.com/taxes.

8. Unless otherwise set forth in a Service Attachment, Customer will pay Lumen's standard ancillary charges for expedites and additional activities, features, or options as set forth in the Ancillary Fee Schedule, available at http://www.lumen.com/ancillary-fees. If Lumen cannot complete installation due to Customer delay or inaction, Lumen

may begin charging Customer and Customer will pay such charges.

9. For colocation, data center and/or hosting services, pre-arranged escorted access may be required at certain locations, and cross connect services are subject to whether facilities are available at the particular location to complete the connection.

10. Compliance with Laws. The parties comply with all laws and regulations applicable to the execution of this Order and to the provision of Services by Lumen, including, as applicable, procurement laws or regulations regarding cumulative purchases of Services by Customer.

11. E-Rate and/or RHC/HCF Funding. If Customer applies for or seeks E-Rate and/or RHC/HCF funding for the Service(s) to be provided under this Order, Customer's Service(s) will be governed by a current eligible Existing Agreement, or if Customer and Lumen do not have a current eligible Existing Agreement, the Lumen E-Rate MSA or Lumen SLED MSA with the E-Rate and/or RHC/HCF Program Addendum will apply and must be executed contemporaneously with this Order.

12. If your network service utilizes TDM technologies, then the following applies: (a) During the Service Term and on 60 days' prior written notice, Lumen may re-provision Customer's off-net TDM services ("Service Re-provision"). If Customer objects to the Service Re-provision, Customer may terminate the affected service by notifying Lumen in writing within 30 days of the date of the Service Re-provision notification; and (b) During the Service Term, Lumen may increase rates for off-net TDM services. Lumen will provide Customer 60 days' prior written notice before implementing the increase ("Rerate Notice"). If Customer objects to the increase, Customer must notify Lumen in writing within 30 days of the date of the Rerate Notice whether Customer will (i) receive the affected service on a month-to-month basis or (ii) terminate the affected service, subject to early termination liability charges. Under subsection (ii), Customer's requested disconnect date must be within 90 days of the Rerate Notice. Unless Customer so notifies Lumen, the affected service will continue to be provided at the increased rates. If Customer does not respond to the Rerate Notice, the affected service will continue to be provided at the increased rates set forth in the Rerate Notice.

13. Infrastructure Investment and Jobs Act (IIJA) Grant Programs. If Customer participates in an IIJA program, including but not limited to, the Middle Mile Grant, Tribal Connectivity Broadband, and the Broadband Equity Access and Deployment (BEAD) Grant Programs, then Customer cannot pay for Services with funds obtained through the IIJA or other similar grants that would obligate Lumen to provide certain information or perform certain regulatory compliance functions, unless each of those functions and obligations is explicitly identified and agreed to by the parties in the Agreement or in an amendment to the Agreement.

Additional Order Terms

Invoices

Single prices shown above for bundled Services, or for Services provided at multiple locations, will be allocated among the individual services for the purpose of applying Taxes and regulatory fees and also may be divided on Customer's invoice by location served.

Activation Support

If requested by Customer, and for an additional charge, Lumen will provide assistance with activating and/or configuring equipment on Customer's side of the Demarcation Point ("Activation Support").

Signature Block

Customer: City of Sante Fe - NM
Signature:
Name: Alan Webber
Title: Mayor
Date:

Customer and the individual signing above represent that such individual has the authority to bind Customer to this Agreement.

Document Generation Date: 07-16-2024

4 STATEMENT OF WORK

SOW CHANGE REQUEST FOR City of Santa Fe – NM
Agreement Pramata ID # 3028478
Quote Number: >>XXXXXX [If Applicable]<<

1. SOW CHANGE REQUEST OVERVIEW

This SOW Change Request 02 ("SOW Change Request") sets forth the changes to the above identified Statement of Work for the Services concerning the ("Project") executed by Lumen and City of Santa Fe -NM on 03/09/2022 ("SOW") . "Lumen" is defined for purposes of this SOW as CenturyLink Communications, LLC d/b/a Lumen Technologies Group or an affiliated entity as identified below. In the event of any inconsistencies between the terms of this or any prior SOW Change Request(s) and the SOW, the terms of this SOW Change Request will govern. Except as modified within this or a prior SOW Change Request, all the terms of the SOW will remain unchanged. Any capitalized term not defined will have the meaning assigned in the SOW or Agreement.

This SOW Change Request encompasses the following amended terms for the Services, which collectively will be defined as the "Change in Service".

2. CHANGES TO THE DESCRIPTION OF WORK

2.1. Change in Service to Scope:

Lumen will provide an additional 80 hours of Site Infrastructure Services as described in the SOW.

Project Fees

Site Services NRC	Quality of Hours	Per Hour NRC	Total NRC
Block of Hours	80	$229.00	$18,320.00

2.2. Change in Service to Project Timeline: N/A

2.3. Change in Service to Customer Responsibilities : N/A

2.4. Change in Service to Project Assumptions : N/A

2.5 This is a 1 year engagement with a 12 month Term.

3. CHANGES TO CHARGES; SERVICE TERM

3.1. Change in Service to Services Fees:

3.2. Change in Service to Expenses : N/A

3.3. Change in Service to Service Term : N/A

Any pricing quoted within this SOW Change Request is valid until 12/31/2024

4. AUTHORIZATION

This SOW Change Request will not become effective until Lumen and Customer have executed the Agreement, applicable Service Attachments, and the initial SOW. This SOW Change Request is effective on the date the last party signs it (the "effective date").

Acknowledged & Agreed:

© Lumen Technologies. All Rights Reserved.

LUMEN	City of Santa Fe - NM
Alex Khanin Alex Khanin (Oct 22, 2024 14:19 MDT)	
Authorized Signature	Authorized Signature
Alex Khanin	
Name Typed or Printed	Name Typed or Printed
Manager Offer Management	
Title	Title
Oct 22, 2024	
Date	Date

© Lumen Technologies. All Rights Reserved.
CSS.v1.030321

IN WITNESS WHEREOF, the parties have agreed to this Amendment/Addendum as of the date when it is executed by the parties, whichever signature occurs last.

CITY OF SANTA FE:

_____
ALAN WEBBER, MAYOR

ATTEST:

_____
GERALYN CARDENAS, INTERIM CITY CLERK

CITY ATTORNEY'S OFFICE:

Oct 21, 2024
ASSISTANT CITY ATTORNEY

APPROVED FOR FINANCES:

Emily K. Oster
EMILY OSTER, FINANCE DIRECTOR

CERTIFICATE OF LIABILITY INSURANCE

DATE (MM/DD/YYYY): 06/10/2024

THIS CERTIFICATE IS ISSUED AS A MATTER OF INFORMATION ONLY AND CONFERS NO RIGHTS UPON THE CERTIFICATE HOLDER. THIS CERTIFICATE DOES NOT AFFIRMATIVELY OR NEGATIVELY AMEND, EXTEND OR ALTER THE COVERAGE AFFORDED BY THE POLICIES BELOW. THIS CERTIFICATE OF INSURANCE DOES NOT CONSTITUTE A CONTRACT BETWEEN THE ISSUING INSURER(S), AUTHORIZED REPRESENTATIVE OR PRODUCER, AND THE CERTIFICATE HOLDER.

IMPORTANT: If the certificate holder is an ADDITIONAL INSURED, the policy(ies) must have ADDITIONAL INSURED provisions or be endorsed. If SUBROGATION IS WAIVED, subject to the terms and conditions of the policy, certain policies may require an endorsement. A statement on this certificate does not confer rights to the certificate holder in lieu of such endorsement(s).

PRODUCER
MARSH USA LLC.
CA License #0437153
1301 5th Avenue, Suite 1900
Seattle, WA 98101-2682
Attn: Seattle.certrequest@marsh.com / Fax: 212-948-4326
CN102197661-STND-ALL-23-24

CONTACT NAME: ...
PHONE (A/C, No, Ext): **FAX (A/C, No):**
E-MAIL ADDRESS:

INSURER(S) AFFORDING COVERAGE	NAIC #
INSURER A : Greenwich Insurance Company	22322
INSURER B : XL Specialty Insurance Co.	37885
INSURER C : Allianz Underwriters Ins Co	36420
INSURER D :	
INSURER E :	
INSURER F :	

INSURED
Lumen Technologies, Inc.
and all subsidiaries, including but not limited to:
Qwest Corporation; Embarq Corporation; Level 3 Communications, LLC and CenturyLink Communications, LLC
100 CenturyLink Dr.
Monroe, LA 71203

COVERAGES **CERTIFICATE NUMBER:** SEA-004021389-01 **REVISION NUMBER:** 3

THIS IS TO CERTIFY THAT THE POLICIES OF INSURANCE LISTED BELOW HAVE BEEN ISSUED TO THE INSURED NAMED ABOVE FOR THE POLICY PERIOD INDICATED. NOTWITHSTANDING ANY REQUIREMENT, TERM OR CONDITION OF ANY CONTRACT OR OTHER DOCUMENT WITH RESPECT TO WHICH THIS CERTIFICATE MAY BE ISSUED OR MAY PERTAIN, THE INSURANCE AFFORDED BY THE POLICIES DESCRIBED HEREIN IS SUBJECT TO ALL THE TERMS, EXCLUSIONS AND CONDITIONS OF SUCH POLICIES. LIMITS SHOWN MAY HAVE BEEN REDUCED BY PAID CLAIMS.

INSR LTR	TYPE OF INSURANCE	ADDL INSD	SUBR WVD	POLICY NUMBER	POLICY EFF (MM/DD/YYYY)	POLICY EXP (MM/DD/YYYY)	LIMITS		
A	X **COMMERCIAL GENERAL LIABILITY** CLAIMS-MADE [X] OCCUR X CONTRACTUAL LIABILITY GEN'L AGGREGATE LIMIT APPLIES PER: X POLICY [ ] PRO-JECT [ ] LOC OTHER:	X	X	RGD500033311	09/01/2023	09/01/2024	EACH OCCURRENCE DAMAGE TO RENTED PREMISES (Ea occurrence) MED EXP (Any one person) PERSONAL & ADV INJURY GENERAL AGGREGATE PRODUCTS - COMP/OP AGG	$ $ $ $ $ $	3,000,000 500,000 10,000 3,000,000 15,000,000 15,000,000
A	**AUTOMOBILE LIABILITY** X ANY AUTO X OWNED AUTOS ONLY [ ] SCHEDULED AUTOS X HIRED AUTOS ONLY [X] NON-OWNED AUTOS ONLY	X	X	RAD500033411 Auto Physical Damage - Self Insured	09/01/2023	09/01/2024	COMBINED SINGLE LIMIT (Ea accident) BODILY INJURY (Per person) BODILY INJURY (Per accident) PROPERTY DAMAGE (Per accident)	$ $ $ $	2,000,000
C	X **UMBRELLA LIAB** [X] OCCUR **EXCESS LIAB** [ ] CLAIMS-MADE DED [ ] RETENTION $	X	X	U5Z000023220	09/01/2023	09/01/2024	EACH OCCURRENCE AGGREGATE	$ $	10,000,000 10,000,000
B B B B	**WORKERS COMPENSATION AND EMPLOYERS' LIABILITY** ANYPROPRIETOR/PARTNER/EXECUTIVE OFFICER/MEMBER EXCLUDED? Y/N [N] **(Mandatory in NH)** If yes, describe under DESCRIPTION OF OPERATIONS below	N / A	X	RWD500032911 (AOS) RWR500033011 (WI) RWE500033111 (WA) RWE500033211 (OH)	09/01/2023 09/01/2023 09/01/2023 09/01/2023	09/01/2024 09/01/2024 09/01/2024 09/01/2024	X PER STATUTE [ ] OTH-ER E.L. EACH ACCIDENT E.L. DISEASE - EA EMPLOYEE E.L. DISEASE - POLICY LIMIT	$ $ $	1,000,000 1,000,000 1,000,000
C	Technology E&O incl. Cyber/Privacy Liability			U5Z000023220	09/01/2023	09/01/2024	Each Claim/Aggregate Retention		10,000,000 5,000,000

DESCRIPTION OF OPERATIONS / LOCATIONS / VEHICLES (ACORD 101, Additional Remarks Schedule, may be attached if more space is required)
City of Santa Fe is included as Additional Insured as respects their interest in the operations of the Named Insured as required by contract or agreement regarding General Liability, Auto Liability, and Umbrella Liability.

CERTIFICATE HOLDER

City of Santa Fe
200 Lincoln Avenue
Santa Fe, NM 87504

CANCELLATION

SHOULD ANY OF THE ABOVE DESCRIBED POLICIES BE CANCELLED BEFORE THE EXPIRATION DATE THEREOF, NOTICE WILL BE DELIVERED IN ACCORDANCE WITH THE POLICY PROVISIONS.

AUTHORIZED REPRESENTATIVE
of Marsh USA LLC

Kathleen J. Stephens

© 1988-2016 ACORD CORPORATION. All rights reserved.

ADDITIONAL REMARKS SCHEDULE

AGENCY	NAMED INSURED
MARSH USA LLC.	Lumen Technologies, Inc. and all subsidiaries, including but not limited to: Qwest Corporation; Embarq Corporation; Level 3 Communications, LLC and CenturyLink Communications, LLC 100 CenturyLink Dr. Monroe, LA 71203
POLICY NUMBER	
CARRIER / NAIC CODE	EFFECTIVE DATE:

ADDITIONAL REMARKS

THIS ADDITIONAL REMARKS FORM IS A SCHEDULE TO ACORD FORM,
FORM NUMBER: 25 FORM TITLE: Certificate of Liability Insurance

---------- GENERAL LIABILITY ----------

Automatic Additional Insured's Primary Coverage
Additional Insured as respects your interest in the operations of the Named Insured as required by contract or agreement.
Coverage provided by the above General Liability policy shall be primary and is limited to liability arising out of Named Insured's ownership and/or operations. Any insurance carried by the additional insured shall not be contributory insurance.
Waiver of Transfer of Rights of Recovery Against Others to Us (Waiver of Subrogation) – any person or organization with whom you have entered into a contract or agreement, or by statute, law or code of ordinance. Separation of Insureds Applies. Insurance covers incidents that occur within 50' of railroad property, any railroad exclusions have been deleted per endorsement CG2417.

---------- AUTOMOBILE LIABILITY ----------

Any person or organization you are required in a written contract, agreement, statute, law or code of ordinances provided the "bodily injury" or "property damage" occurs subsequent to the executive of the contract, agreement, statute, law or code of ordinances.
Lessor - Additional Insured and Loss Payee - All Lessors
Waiver of Transfer of Rights of Recovery Against Others to Us (Waiver of Subrogation) – Any person or organization with whom you have waived prior to the "accident" or the "loss" under a contract with that person or organization, or under statute, law or code of ordinances.

--------- WORKERS' COMPENSATION AND EMPLOYER'S LIABILITY AND EXCESS WORKERS' COMPENSATION AND EMPLOYER'S LIABILITY (OH & WA - SELF-INSURED - $1,000,000 RETENTION) ---------

Waiver of Our Right to Recover from others Endorsement – Where required by written agreement signed prior to loss, or required by statute, law or code of ordinances executed prior to loss.

---------- EXCESS/UMBRELLA ----------
Coverage applies per occurrence. Additional Insured as respects your interest in the operations of the Named Insured as required by contract or agreement. Waiver of Transfer of Rights of Recovery Against Others to Us (Waiver of Subrogation) - Any person or organization with whom you have entered into a contract or agreement, but only to the extent required by such contract or agreement. Separation of Insureds Applies.

---------- COMMERCIAL CRIME - FIDELITY BOND ----------
Carrier: XL Specialty Insurance Company
Policy Number: ELU19204423
Effective Dates: 09/01/2023 - 09/01/2024
Deductible: $2,500,000
Each Occurrence: $15,000,000

---------- U.S. PROPERTY ----------
Carrier: Allianz Underwriters Insurance Company
Policy Number: U5Z000023220
Effective Dates: 09/01/2023 - 09/01/2024
Limit: $25,000,000
Deductible: $25,000,000

Property Coverage: "All Risk" of Direct Physical Loss or Damage to All Real and Personal Property, including Boiler & Machinery, Earthquake, Flood and Wind - Replacement Cost Basis, and Business Interruption - Actual Loss Sustained.
Loss Payee or mortgagee as required by written contract/loan agreement to the the extent of your insurable interest. Waiver of Subrogation - Any person or organization whom you have entered into a contract or agreement, but only to the extent required by such contract or agreement. Other deductibles may apply as per policy terms and conditions.

© 2008 ACORD CORPORATION. All rights reserved.
The ACORD name and logo are registered marks of ACORD

CoSF COLO move

Final Audit Report 2024-10-22

Created:	2024-10-22
By:	Casey Stone (casey.stone@insnetworks.com)
Status:	Signed
Transaction ID:	CBJCHBCAABAAufsi7kIgDLjkUg4vuaCru8HvywhnzbeX

"CoSF COLO move" History

Document created by Casey Stone (casey.stone@insnetworks.com)
2024-10-22 - 5:39:55 PM GMT- IP address: 98.60.213.51

Document emailed to pomdirectorsignature@lumen.com for signature
2024-10-22 - 5:42:42 PM GMT

Email viewed by pomdirectorsignature@lumen.com
2024-10-22 - 5:51:50 PM GMT- IP address: 155.70.52.174

Signer pomdirectorsignature@lumen.com entered name at signing as Alex Khanin
2024-10-22 - 8:19:36 PM GMT- IP address: 155.70.104.123

Document e-signed by Alex Khanin (pomdirectorsignature@lumen.com)
Signature Date: 2024-10-22 - 8:19:38 PM GMT - Time Source: server- IP address: 155.70.104.123

Agreement completed.
2024-10-22 - 8:19:38 PM GMT

SIN	MAS SIN	SubSIN	Manufacturer Name	MFR Part Number
132-52	54151ECOM	132-52.12040	Lumen	132-52.12040
132-51	54151S	QGSI-PS116	Lumen	QGSI-PS116
132-52	54151ECOM	132-52.9535	Lumen	132-52.9535
132-52	54151ECOM	132-52.9545	Lumen	132-52.9545

Product Category	Product Name / Service Proposed
WaveLengths	Wavelength Service - Metro (US)
Labor	Integration Architect Analytics—Interm.
IPVPN	IPVPN Port Gig-Ethernet (1000 Mb) (100 CDR Mbps)
IPVPN	IPVPN Port 10 GB (1000 CDR Mbps)

Product Description	Type	GSA Price with IFF	Price Effective Date
10 GigE LAN, Unprotected Wavelength, Custom or Diversely Routed, 3 Year	MRC	$ 1,632.24	2/8/2024
• 4-8 years' of experience in IT with expertise in Big Data integration. • Minimum 3 years' of experience in Big Data Analytics. • As an Integration Architect Analytics, will be responsible for integration architecture to provide solution of integrate multiple systems with various integration methodology & re-architect baseline middleware solution. • Expertise in computer-based software and / or statistical packages (e.g., SAS, SPSS, R, MATLAB, C, C++, JAVA) for developing predictive models. • BS / B Tech degree in Computer Science, related technical field preferred, or equivalent work experience. • Mutually agreed upon Statement of Work required before ordering (Professional Services)—BS / B Tech degree in Computer Science, related technical field preferred, or equivalent work experience.—4-8 years' of experience in IT with expertise in Big Data integration. Minimum 3 years' of experience in Big Data Analytics.	Hr	$ 289.98	9/1/2024
Internet Protocol Virtual Private Network (IPVPN) Port Gig-Ethernet (1000 Mb) (100 CDR Mbps)	MRC	$ 262.97	1/18/2024
Internet Protocol Virtual Private Network (IPVPN) Port 10 GB (1000 CDR Mbps)	MRC	$ 625.69	1/18/2024

Purchasing_Memo_Lumen (1)

Final Audit Report 2024-11-12

Created:	2024-11-12
By:	Kristy Miera (kamiera@santafenm.gov)
Status:	Signed
Transaction ID:	CBJCHBCAABAAd54Vro0-cJI1hS-jg-qB8BhNROBx-IAn

"Purchasing_Memo_Lumen (1)" History

Document created by Kristy Miera (kamiera@santafenm.gov)
2024-11-12 - 6:12:12 PM GMT- IP address: 63.232.20.2

Document sent to ALEXIS LOTERO (aclotero@santafenm.gov) and ajhopkins@santafenm.gov
ajhopkins@santafenm.gov (ajhopkins@santafenm.gov) for signature. One of them to sign
2024-11-12 - 6:21:05 PM GMT

Email viewed by ALEXIS LOTERO (aclotero@santafenm.gov)
2024-11-12 - 6:21:34 PM GMT- IP address: 104.47.64.254

Document e-signed by ALEXIS LOTERO (aclotero@santafenm.gov)
Signature Date: 2024-11-12 - 6:23:17 PM GMT - Time Source: server- IP address: 63.232.20.2

Agreement completed.
2024-11-12 - 6:23:17 PM GMT

Powered by Adobe Acrobat Sign

CITY OF SANTA FE

Memorandum

Date: October 8, 2024

To: Governing Body, Public Works and Utilities Committee, Finance Committee

From: Romella Glorioso-Moss, PhD, CPM, Complete Streets Capital Projects Manager

Via: Regina Wheeler, Public Works Department Director RW

RE: New Mexico Department of Transportation Project Fund Grant Agreement - Project Control Number HW2LP50060

EXECUTIVE SUMMARY:

The Resolution accepts a Transportation Project Fund Grant administered by the New Mexico Department of Transportation ("NMDOT") and approves entering into a Grant Agreement, Project Control Number HW2LP50060, to reconstruct the pavement of Buckman Road from Camino De Las Crucitas to Paseo Nopal, a total distance of 1.7 miles. The anticipated total for the project is two million, three hundred thousand dollars ($2,300,000). The Grant Agreement establishes that NMDOT's share of the total amount will be two million, one hundred eighty-five dollars ($2,185,000), which is ninety-five percent (95%) of the project's total cost. The City of Santa Fe's ("City's") share of the total amount will be one hundred fifteen thousand dollars ($115,000), which is five percent (5%) of the project's total cost. Any dollars spent above the anticipated total of two million, three hundred thousand dollars ($2,300,000) will be paid by the City.

BACKGROUND:

Since 2021, the pavement reconstruction of Buckman Road has been a top priority identified by the City's Bicycling and Pedestrian Advisory Committee. Buckman Road is a key bicycle route into the city and to La Tierra Trails and allows cyclists to avoid the at-grade crossings along New Mexico State Road 599. This project has been prioritized by the Governing Body in the Impact Fees Capital Improvements Plan Fiscal Year 2026-2030, Resolution No. 2024-28. The pavement design funding was obtained in 2022 via the Local Government Road Fund, Resolution No. 2022-50 and in May 2024, the City's Public Works Department applied for the Transportation Project Fund Grant.

The proposed grant agreement, included in the Resolution as Attachment A, terminates on June 30, 2027. NMDOT requires a resolution documenting acceptance of this funding, approved by the Governing Body.

ATTACHMENTS:

Resolution
FIR

CITY OF SANTA FE, NEW MEXICO

RESOLUTION NO. 2024 -__

INTRODUCED BY:

Councilor Michael Garcia

A RESOLUTION

ACCEPTING A GRANT FROM THE TRANSPORTATION PROJECT FUND PROGRAM ADMINISTERED BY NEW MEXICO DEPARTMENT OF TRANSPORTATION AND ENTERING INTO GRANT AGREEMENT CONTROL NUMBER HW2LP50060.

WHEREAS, the City of Santa Fe ("City") and the New Mexico Department of Transportation ("NMDOT") wish to enter a Transportation Project Fund Grant Agreement, control number HW2LP50060, under the Transportation Fund Program for a local road project, incorporated as Exhibit A, the purpose of which is the road and pavement reconstruction of Buckman Road; and

WHEREAS, the NMDOT and City estimate the total cost of the project will be two million, three hundred thousand dollars ($2,300,000), which the Grant Agreement provides will be funded in proportional share by the parties hereto as follows:

1. NMDOT's share shall be ninety-five percent (95%) or two million, one hundred eighty-five thousand dollars ($2,185,000); and

2. The City's proportional matching share shall be five percent (5%) or one hundred

fifteen thousand dollars $115,000.

WHEREAS, the Grant Agreement provides that the City shall pay all costs that exceed the total project cost of two million, three hundred thousand dollars ($2,300,000).

NOW, THEREFORE, BE IT RESOLVED BY THE GOVERNING BODY OF THE CITY OF SANTA FE that the fiscal year 2025 Transportation Project fund Grant Agreement, Project Control Number HW2LP50060, included as Exhibit A, as part of a program administered under the Transportation Project Fund Program, for Buckman Road's reconstruction and pavement, is hereby approved.

THEREFORE, BE IT FURTHER RESOLVED, that the project for this grant agreement has a priority standing, as is established in Resolution No. 2024-28;

THEREFORE, BE IT FURTHER RESOLVED, that the cooperative agreement terminates on June 30, 2027, and the City incorporates all the agreements, covenants, and understandings between the parties hereto concerning the subject matter hereof, and all such covenants, agreements and understandings have been merged into the written agreement.

BE IT FURTHER RESOLVED that the City shall accept responsibility for the Project; assumes the lead role in design development and construction of the Project; agrees to the terms, conditions, and certification and reporting requirements of the Transportation Project Fund Grant Agreement; and assumes ownership, liability, and maintenance responsibilities for all amenities related to the completion of the Project.

PASSED, APPROVED, and ADOPTED this _____day of _____, 2024.

_____

ALAN WEBBER, MAYOR

ATTEST:

_____

GERALYN CARDENAS, INTERIM CITY CLERK

APPROVED AS TO FORM:

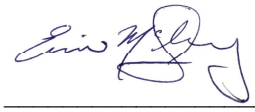

_____

ERIN K. McSHERRY, CITY ATTORNEY

EXHIBIT A

Contract No. _____
Vendor No. 0000054360
Control No. HW2LP50060

TRANSPORTATION PROJECT FUND
GRANT AGREEMENT

This Agreement is between the **New Mexico Department of Transportation** (Department) and **City of Santa Fe** (Public Entity). This Agreement is effective as of the date of the last party to sign it on the signature page below.

Pursuant to NMSA 1978, Sections 67-3-28 and 67-3-78 and 18.27.6 NMAC, the parties agree as follows:

1. Purpose.
The purpose of this Agreement is to provide Transportation Project Funds (TPF) to the Public Entity for the following project scope **Buckman Road Reconstruction-Pavement reconstruction of Buckman Road for approximately 1.1 miles and mill and overlay for 0.6 miles. The road will be brought up to current standards. The width of the road will remain at 22' wide. The shoulders will be racked to match the asphalt.** (Project or CN LP50060). This Agreement specifies and delineates the rights and duties of the parties.

2. Project Funding.
a. The estimated total cost for the Project is Two Million Three Hundred Thousand Dollars and No Cents **($2,300,000.00)** to be funded in proportional share by the parties as follows:

Project Funding	Department Share	Public Entity Share	Total Cost
Funding Source 1	**95%**	**5%**	
FY 2025 Transportation Project Fund **For the purpose stated above in Section 1.**	**$2,185,000.00**	**$115,000.00**	**$2,300,000.00**
Total Transportation Project Funds			**$2,300,000.00**

b. The Public Entity is responsible for all costs that exceed Project funding.
c. All allocated funds must be spent by **June 30, 2027**.
d. The Public Entity represents that no federal funds will be used to finance the Project.
e. The Public Entity must repay Project funding to the Department if:
   1. The Project is cancelled or partially performed.

2. A final audit conducted by the Department at Project completion determines the following: an overpayment, unexpended monies or ineligible expenses.

3. The Department:

a. Shall distribute the funds, identified in Section 2a1, in a lump sum to the Public Entity after:
   1. The Department has received this Agreement fully executed with a Resolution of Sponsorship attached as Exhibit B.
   2. Receipt of a letter requesting funds, which includes the following Project documents: Notice of Award/Work Order and Notice to Proceed for the Project.
   3. If a Department's or another entity's right-of-way is involved, a permit or letter of approval/authorization, from the entity with jurisdiction over the Project right-of-way.

b. Will not:
   1. Perform any detailed technical reviews of Project scope, cost, budget, schedule, design or other related documents;
   2. Have any involvement in the construction phase;
   3. Be involved in permit preparation or the review or coordination with regulatory agencies.
   4. Conduct periodic assurance inspections or comparison material testing.
   5. Participate in resolving bidding and contract disputes between the Public Entity and contractors.

c. May perform Project monitoring that might consist of the following:
   1. Review of Project status to ensure that project goals, objectives, performance requirements, timelines, milestone completion budgets and other guidelines are being met.
   2. Request written Project status reports.
   3. Conduct a review of the Local Entity's performance and administration of the Project funds identified in Section 2a.

d. Reserves the right, upon receipt of the Public Entity's Certification of Completion, Exhibit A, to request additional documents that demonstrate Project completion.

e. If required, the District Engineer or designee, will conduct a Project review to determine if permit is required from the Department. If there is a determination that a permit is not required, a letter of approval and authorization will be forwarded to the Public Entity.

4. The Public Entity Shall:

a. Act in the capacity of lead agency for the purpose as described in Section 1.

b. Procure and award any contract in accordance with applicable procurement law, rules, regulations and ordinances.

c. Be responsible for all design activities necessary to advance the Project to construction and coordinate construction.

d. Unless otherwise specified in a letter of authorization or permit, design and construct the Project in accordance with the Public Entity's established design standards.

e. Have sole responsibility and control of all project phases and resulting quality of the completed work.

f. If the Project is in full or on a portion of a state highway, on a Department right of way or a National Highway System route:

1. Obtain from the Department a permit in accordance with 18.31.6.14 NMAC, State Highway Access Management Requirements or a letter of authorization; and
2. Design and construct the Project in accordance with standards established by the Department.

g. Adopt a written resolution of Project support that includes a commitment to funding, ownership, liability and maintenance. The resolution is attached to this Agreement as Exhibit B.
h. Consider placing pedestrian, bicycle and equestrian facilities in the Project design in accordance with NMSA 1978, Section 67-3-62.
i. Comply with any and all state, local and federal regulations including the Americans with Disabilities Act (ADA) and laws regarding noise ordinances, air quality, surface water quality, ground water quality, threatened and endangered species, hazardous materials, historic and cultural properties, and cultural resources.
j. Be responsible for all permit preparation, review and coordination with regulatory agencies.
k. Cause all designs, plans, specifications and estimates to be performed under the direct supervision of a Registered New Mexico Professional Engineer, in accordance with NMSA 1978 Section 61-23-26.
l. Allow the Department to perform a final inspection of the Project and all related documentation to determine if the Project was constructed in accordance with the provisions of this Agreement. At the Department's request, provide additional documentation to demonstrate completion of the required terms and conditions.
m. Meet with the Department, as needed, or provide Project status reports within thirty (30) days of request.
n. Within 60 days after Project completion, provide the Certification of Completion, which is attached as Exhibit A, that it has complied with the requirements of 18.27.6 NMAC and this Agreement.
o. Upon completion, maintain all the Public Entity's facilities constructed or reconstructed under this Agreement.

5. Both Parties Agree:

a. Upon termination of this Agreement any remaining property, materials, or equipment belonging to the Department will be accounted for and disposed of by the Public Entity as directed by the Department.
b. Unless otherwise indicated in a letter of authorization, the Project will not be incorporated into the State Highway System and the Department is not assuming maintenance responsibility or liability.
c. Pursuant to NMSA 1978, Section 67-3-78, Transportation Project Funds granted under this provision cannot be used by the Public Entity to meet a required match under any other program.
d. The requirements of 18.27.6 NMAC are incorporated by reference.
e. The inability to properly complete and administer the Project may result in the Public Entity being denied future grant funding.

6. Term.

This Agreement becomes effective upon signature of all parties. The effective date is the date when the last party signed the Agreement on the signature page below. This Agreement terminates on the earliest of the following dates: (a) Department receipt of the Certification of Completion or (b) **June 30, 2027**. In the event an extension to the term is needed, the Public Entity shall provide written notice along with detailed justification to the Department sixty (60) days prior to the expiration date to ensure timely processing of an Amendment. Neither party shall have any obligation after said date except as stated in Sections 2e, 4l, 4n and 7.

7. Termination.
If the Public Entity fails to comply with any provision of this Agreement, the Department may terminate this Agreement by providing thirty (30) days written notice. This Agreement may also be terminated pursuant to Section 15. Neither party has any obligation after termination, except as stated in Sections 2e, 4l, 4n and 7.

8. Third Party Beneficiary.
It is not intended by any of the provisions of any part of this Agreement to create in the public or any member of the public a third party beneficiary or to authorize anyone not a party to the Agreement to maintain a suit(s) for wrongful death(s), bodily and/or personal injury(ies) to person(s), damage(s) to property(ies), and/or any other claim(s) whatsoever pursuant to the provisions of this Agreement.

9. New Mexico Tort Claims Act.
As between the Department and Public Entity, neither party shall be responsible for liability incurred as a result of the other party's acts or omissions in connection with this Agreement. Any liability incurred in connection with this Agreement is subject to the immunities and limitations of the New Mexico Tort Claims Act, NMSA 1978, Section 41-4-1, *et seq*.

10. Contractors Insurance Requirements.
The Public Entity shall require contractors and subcontractors hired for the Project to have a general liability insurance policy, with limits of liability of at least $1,000,000 per occurrence. The Department is to be named as an additional insured on the contractors and subcontractor's policy and a certificate of insurance must be provided to the Department and it must state that coverage provided under the policy is primary over any other valid insurance.

To the fullest extent permitted by law, the Public Entity shall require the contractor and subcontractors to defend, indemnify and hold harmless the Department from and against any liability, claims, damages, losses or expenses (including but not limited to attorney's fees, court costs, and the cost of appellate proceedings) arising out of or resulting from the negligence, act, error, or omission of the contractor and subcontractor in the performance of the Project, or anyone directly or indirectly employed by the contractor or anyone for whose acts they are liable in the performance of the Project.

11. Scope of Agreement.
This Agreement incorporates all the agreements, covenants, and understandings between the parties concerning the subject matter. All such covenants, agreements, and understandings have been merged into this written Agreement. No prior Agreement or understandings, verbal or

otherwise, of the parties or their agents will be valid or enforceable unless embodied in this Agreement.

12. Terms of this Agreement.
The terms of this Agreement are lawful; performance of all duties and obligations must conform with and not contravene any state, local, or federal statutes, regulations, rules, or ordinances.

13. Legal Compliance.
The Public Entity shall comply with all applicable federal, state, local, and Department laws, regulations and policies in the performance of this Agreement, including, but not limited to laws governing civil right, equal opportunity compliance, environmental issue, workplace safety, employer-employee relations and all other laws governing operations of the workplace. The Public Entity shall include the requirements of this Section 13 in each contract and subcontract at all tiers.

14. Equal Opportunity Compliance.
The parties agree to abide by all federal and state laws and rules and regulations, and executive orders of the Governor of the State of New Mexico, pertaining to equal employment opportunity. In accordance with all such laws and rules and regulations, and executive orders of the Governor of the State of New Mexico, the parties agree to assure that no person in the United States will, on the grounds of race, color, national origin, ancestry, sex, sexual preference, age or handicap, be excluded from employment with, or participation in, any program or activity performed under this Agreement. If the parties are found to not be in compliance with these requirements during the term of this Agreement, the parties agree to take appropriate steps to correct these deficiencies.

15. Appropriations and Authorizations.
The terms of this Agreement are contingent upon sufficient appropriations and authorizations being made by the governing board of the Public Entity, the Legislature of New Mexico for performance of the Agreement. If sufficient appropriations and authorizations are not made by the Public Entity and the Legislature this Agreement will terminate upon written notice being given by one party to the other. The Department and Public Entity are expressly not committed to expenditure of any funds until such time as they are programmed, budgeted, encumbered, and approved for expenditure.

16. Accountability of Receipts and Disbursements.
There shall be strict accountability for all receipts and disbursements relating to this Agreement. The Public Entity shall maintain all records and documents relative to the Project for a minimum of five (5) years after completion of the Project. The Public Entity shall furnish the Department and State Auditor, upon demand, any and all such records relevant to this Agreement. If an audit finding determines that specific funding was inappropriate or not related to the Project, the Public Entity shall reimburse that portion to the Department within thirty (30) days of written notification. If documentation is insufficient to support an audit by customarily accepted accounting practices, the expense supported by such insufficient documentation must be reimbursed to the Department within thirty (30) days.

17. Severability.
In the event that any portion of this Agreement is determined to be void, unconstitutional or otherwise unenforceable, the remainder of this Agreement will remain in full force and effect.

18. Applicable Law.
The laws of the State of New Mexico shall govern this Agreement, without giving effect to its choice of law provisions. Venue is proper in a New Mexico Court of competent jurisdiction in accordance with NMSA 1978, Section 38-3-1(G).

19. Amendment.
This Agreement may be amended by an instrument in writing executed by the parties.

The remainder of this page is intentionally left blank.

In witness whereof, each party is signing this Agreement on the date stated opposite that party's signature.

NEW MEXICO DEPARTMENT OF TRANSPORTATION

By:_____ Date: _____
Cabinet Secretary or Designee

Approved as to form and legal sufficiency by the New Mexico Department of Transportation's Office of General Counsel

By:_____ Date: _____
Assistant General Counsel

City of Santa Fe

By:_____ Date: _____
Alan Webber, City Mayor

Attest

By:_____ Date: _____
Geralyn Cardenas, Interim City Clerk

Approved as to form and legal sufficiency

By: Marcos Martinez
Marcos Martinez (Oct 10, 2024 11:16 MDT) Date: Oct 10, 2024
Marcos Martinez, Senior Assistant City Attorney

Approved for finances

By:_____ Date: _____
Emily Oster, Finance Director

EXHIBIT A

CERTIFICATION OF PROJECT COMPLETION

Public Entity:

Control No. LP50060

I, _____, in my capacity as _____ of _____ certify in regard to Control No. **LP50060**:

1. That the Public Entity has complied with the terms and conditions of the requirements under this Agreement and 18.27.6 NMAC.
2. That all work in was performed in accordance with the Agreement.
3. That the total Project cost of _____, with New Mexico Department of Transportation 95% share of _____ and the Public Entity share of _____ is accurate, legitimate, and appropriate for the Project.
4. That the Project was completed on _____ of _____, 20____

In Witness Whereof, _____ in his/her capacity as_____ of _____ certify that the matters stated above are true to his/her knowledge and belief.

City of Santa Fe

By:_____ Date: _____

Title: _____ Date: _____

ATTEST:

By:_____ Date: _____

Public Entity Clerk

When completed, send Certification of Project Completion to the District Coordinator, New Mexico Department of Transportation.

EXHIBIT B

RESOLUTION

City of Santa Fe

PARTICIPATION IN TRANSPORTATION PROJECT FUND PROGRAM ADMINISTERED BY NEW MEXICO DEPARTMENT OF TRANSPORTATION

WHEREAS, the **City of Santa Fe** and the New Mexico Department of Transportation have entered into a grant agreement under the Transportation Fund Program for a local road project.

WHEREAS, the total cost of the project will be $2,300,000 to be funded in proportional share by the parties hereto as follows:

a. New Mexico Department of Transportation's share shall be 95% or $2,185,000.00

and

b. **City of Santa Fe**'s proportional matching share shall be 5% or $115,000.00

TOTAL PROJECT COST IS $2,300,000.00

The **City of Santa Fe** shall pay all costs, which exceed the total amount of $2,300,000.00**.**

Now therefore, be it resolved in official session that **City of Santa Fe** determines, resolves, and orders as follows:

That the project for this Cooperative agreement is adopted and has a priority standing.

The agreement terminates on June 30, 2027 and the **City of Santa Fe** incorporates all the agreements, covenants, and understandings between the parties hereto concerning the subject matter hereof, and all such covenants, agreements and understandings have been merged into the written agreement.

Now therefore, be it resolved by the **City of Santa Fe** to enter into Cooperative Agreement for Project Control Number **LP50060** with the New Mexico Department of Transportation for the TPF Program for year 2025 for Buckman Road Reconstruction-Pavement reconstruction of Buckman Road for approximately 1.1 miles and mill and overlay for 0.6 miles. The road will be brought up to current standards. The width of the road will remain at 22' wide. The shoulders will be racked to match the asphalt.- within the control of the **City of Santa Fe** in New Mexico.

(Appropriate Signatures below (Council, Commission, School Board, Tribe, Pueblo, Nation, etc.)

_____ _____

(PRINTED NAME, POSITION) DATE

_____ _____

(PRINTED NAME, POSITION) DATE

FIR No. 10628.1

FISCAL IMPACT REPORT

General Information:

(Check) Bill: _____ Resolution: X

Short Title(s): Acceptance of Transportation Project Fund Grant Agreement to Reconstruct Buckman Road Pavement

Sponsor(s): Councilor Michael Garcia

Reviewing Department(s): Public Works Department

Staff Completing FIR: Romella Glorioso-Moss Date: 10/08/2024 Phone: (505) 955-6623

Reviewed by City Attorney: _____ Date: Oct 31, 2024

Reviewed by Finance Director: Emily K. Oster Date: Nov 1, 2024

Summary:
This Resolution accepts a Transportation Project Fund grant, administered by the New Mexico Department of Transportation ("NMDOT") for the pavement reconstruction of Buckman road from Camino De Las Crucitas to Paseo Nopal, a total distance of 1.7 miles. The project is identified as Project Control Number HW2LP50060, and the grant amount is two million, three hundred thousand dollars ($2,300,000) . The City of Santa Fe ("City") will contribute one hundred fifteen thousand dollars ($115,000), or five percent (5%) of the total project cost. NMDOT will contribute two million, one hundred eighty-five thousand dollars ($2,185,000), or ninety-five percent (95%) of the total project cost. This funding agreement terminates on June 30, 2027.

Departments Affected:
Public Works Department

Consequences of Not Enacting Legislation:
If this legislation is not adopted, the City will not receive NMDOT's funding share from the Transportation Project Fund in the amount of $2,185,000, meaning the City will not receive the additional funding needed to complete the pavement reconstruction of Buckman road. In addition, NMDOT will not prioritize any future application for project funding by the City.

Conflict, Duplication, Companionship, or Relationship to Other Legislation:
The proposed resolution relates to Resolution No. 2022-50, which accepted a Local Government Road Fund to design the project, Resolution No. 2024-12 Maintenance of Bicycle and Pedestrian Infrastructure, and Resolution No. 2024-28 the Impact Fees Capital Improvements Plan for Fiscal Year 2026-2030.

Performance and Administrative Implications:
Complete Streets Division staff will need to administer the project, including the bidding process. The construction manager will ensure the project is completed within the funding agreement term and will make

sure the project complies with the funding agreement, and will also submit reimbursements to NMDOT.

Fiscal Implications:
The City of Santa Fe's funding share is five percent (5%) or one hundred fifteen thousand dollars ($115,000).

Fiscal Impact

_____ Check here if no fiscal impact

Expenditures

Expenditure Type	FYE 25	FYE ___	FYE ___	Require BAR (Y/N)	Recurring (R) or Non-recurring (NR)	Fund	3-Year Total Cost
Personnel and Benefits*	$	$	$				
Capital Outlay	$	$	$	Y	NR	Road Impact Fees	$ $115,000
Contractual/ Professional Services	$	$	$				
Operating	$	$	$				$
Total:	$	$	$				$ 115,000

*This includes all staff time associated with executing the job functions of the proposed legislation.

Expenditure Narrative:

The City's five percent (5%) share of funding for the project is one hundred fifteen thousand dollars ($115,000), which will come out of Road Impact Fees fund. Road impact fees can only be used for roadway improvements.

Revenue

Revenue Type	FYE 25	FYE __	FYE __	Recurring (R) or Non-recurring (NR)	Fund
General Fund	$	$	$		
Special Revenue	$	$	$		
CIP	$	$	$		
Enterprise	$	$	$		
Internal Service	$	$	$		
Trust and Agency	$	$	$		
Federal	$	$	$		
Other (State)	$2,185,000	$	$	NR	NMDOT
Total	$2,185,000	$	$		

Revenue Narrative:

This revenue of two million, one hundred eighty-five thousand dollars ($2,185,000) is NMDOT's 95% share of the funding to reconstruct the pavement of Buckman Road.

Signature: Regina Wheeler (Nov 1, 2024 14:37 MDT)

Email: rawheeler@santafenm.gov

Signature:

Email: rsglorioso-moss@santafenm.gov

CITY OF SANTA FE

Memorandum

Date: October 22, 2024

To: Governing Body, Quality of Life Committee, Public Works and Utilities Committee, Finance Committee

From: Regina Wheeler, Public Works and Utilities Department Director
Marci Eannarino, Legislation and Policy Innovation Manager
Christine M. Spiers, Legislative Assistant

Via: Erin K. McSherry, City Attorney
Randy Randall, Interim City Manager

RE: 2025 Legislative Priorities

EXECUTIVE SUMMARY:
The proposed resolution establishes the City's priorities for the 2025 Legislative Session. The resolution includes citywide capital outlay requests, district capital outlay requests, and policy priorities of the Governing Body.

The capital outlay requests this year are those adopted as the top five requests in the City's ICIP list. Specifically, they include the following items: 1) any statewide capital outlay initiatives associated with homelessness and housing, 2) replacement of the Paseo Real Wastewater Reclamation Facility, 3) the Arroyo De Los Chamisos/Richards Avenue projects, 4) the Santa Fe Regional Airport Terminal Expansion Phase II, and 5) Midtown Redevelopment Infrastructure improvements.

This resolution also includes district-specific capital outlay requests as follows: funding for the construction of a replacement of the Santa Fe River Pedestrian Bridge at Shelby St. in District 1, funding for the Ragle Park Baseball Field Upgrades in District 2, funding for the Municipal Recreation Complex Irrigation System Upgrades to conserve water and steward turf in District 3, and funding for the Rufina Street and Lopez Lane Intersection Improvements in District 4.

The policy priorities include, but are not limited to, the expansion of affordable housing availability; expansion of services for homeless families and individuals; support for the City and Santa Fe County partnership, "CONNECT"; support for economic mobility efforts related to community and economic development; support for violence intervention programs; support for addressing fentanyl as a community health crisis through meaningful partnerships between State, County and City agencies; support for water conservation, recycling, and other environmental

priorities; elimination of the three percent property tax increase on non-owner-occupied residences, and a statewide business licensing system.

BACKGROUND:
Every year the Governing Body adopts capital outlay and policy priorities for the Legislature's consideration during the next legislative session. The City has successfully lobbied for numerous capital outlay projects and policy issues in the past. Some items included in the resolution have been policy priorities for multiple years and have either never been considered by the legislature, died in committee at some point in the process, or were vetoed by the Governor.

ATTACHMENTS:
Resolution
Fiscal Impact Report

CITY OF SANTA FE, NEW MEXICO

RESOLUTION NO. 2024-

INTRODUCED BY:

Mayor Alan Webber

A RESOLUTION

ESTABLISHING THE CITY OF SANTA FE'S PRIORITIES FOR CONSIDERATION BY THE NEW MEXICO STATE LEGISLATURE DURING THE 57TH LEGISLATURE – STATE OF NEW MEXICO – FIRST SESSION, 2025.

WHEREAS, the 60-day Legislative Session ("Legislative Session") of the 2025 New Mexico State Legislature ("Legislature") begins on January 21, 2025, and ends on March 22, 2025; and

WHEREAS, the Governing Body desires to establish City of Santa Fe ("City") legislative priorities to be considered by the City's legislative delegation and the Legislature; and

WHEREAS, the Governing Body's legislative priorities include City-wide capital outlay priorities, statutory priorities, general fund priorities, City Council District capital outlay priorities, and other legislative priorities beneficial to the City to be pursued during the Legislative Session.

NOW, THEREFORE, BE IT RESOLVED BY THE GOVERNING BODY OF THE CITY OF SANTA FE that the Governing Body hereby adopts priorities for the Legislative Session, consistent with Resolution No. 2024-28 (adopting the City's Infrastructure Capital Improvements Plan for 2026-2030) and as specified below.

1. From any statewide capital outlay initiative associated with homelessness and housing, the City requests funding in the amount of **$5,000,000** for permanent and transitional housing to end veteran, youth, and chronic homelessness;

2. From any statewide capital outlay initiative associated with water and wastewater, the City requests funding in the amount of **$4,500,000** for the replacement Paseo Real Wastewater Reclamation Facility;

3. From any statewide capital outlay initiative associated with roads and transportation, the City requests funding in the amount of **$2,500,000** for the Arroyo De Los Chamisos/Richards Avenue project.

4. From any statewide capital outlay initiative associated with airports, regional transportation and economic development, the City requests funding in the amount of **$10,000,000** for the Santa Fe Regional Airport Terminal Expansion Phase II.

5. From any statewide capital outlay initiative associated with economic development, affordable housing, and urban redevelopment, the City requests funding in the amount of **$5,000,000** for the Midtown Redevelopment Infrastructure Improvements.

BE IT FURTHER RESOLVED that, as is consistent with Resolution No. 2022-12 (establishing next steps for the Midtown Property), the Governing Body requests the Legislature enact a Joint Resolution ratifying and approving the transfer of one or more tracts of City-owned real property to the State of New Mexico Department of Public Safety in trade and exchange for the transfer of multiple tracts of State-owned real property to the City of Santa Fe, New Mexico for the Midtown Redevelopment Project.

BE IT FURTHER RESOLVED that the Governing Body supports legislation that funds the New Mexico Department of Transportation for safety and multimodal improvements and pavement rehabilitation of New Mexico 475 (being Hyde Park Road) and Cerrillos Road Phase III Construction.

BE IT FURTHER RESOLVED that the Governing Body supports any legislation that

enhances the Downtown Improvement District of Santa Fe including such items as revised streetscapes, improved signage, placemaking, Americans with Disabilities Act considerations, and litter collection.

BE IT FURTHER RESOLVED that the Governing Body renews its request that the Legislature support legislation that promotes water reuse and water planning and other legislation designed to improve overall sustainability at the state and local level.

BE IT FURTHER RESOLVED that the Governing Body re-affirms its support for and endorsement of any legislation that would support municipal recycling programs and other programs that support recycling market development.

BE IT FURTHER RESOLVED that the Governing Body hereby establishes the following City Council District capital outlay legislative funding priorities for improvements of citywide infrastructure for consideration by the Legislature during the Legislative Session:

1. For a capital outlay initiative located within **City Council District 1**, **$1,000,000** to construct a replacement Santa Fe River Pedestrian Bridge at Shelby St.

2. For a capital outlay initiative located within **City Council District 2**, **$1,000,000** for the Ragle Park Baseball Field Upgrades.

3. For a capital outlay initiative located within **City Council District 3**, **$1,000,000** for the Municipal Recreation Complex Irrigation System Upgrades to conserve water and steward turf.

4. For a capital outlay initiative located within **City Council District 4**, **$1,000,000** for Rufina Street & Lopez Lane Intersection Improvements.

BE IT FURTHER RESOLVED that, consistent with Resolution No. 2023-32, the Governing Body hereby establishes the following capital outlay legislative funding priority for any initiative associated with public safety: **$1,150,000** to plan, design, and construct much needed renovations of the Municipal Court building including adding security measures.

BE IT FURTHER RESOLVED that the Governing Body supports and endorses any legislation that expressly provides that legislative appropriations are not subject to extra-statutory

limitations.

BE IT FURTHER RESOLVED that the Governing Body supports legislation to place a constitutional referendum on the ballot to permit municipalities and counties to restrict firearms to the extent constitutionally permissible, while continuing to disallow municipalities and counties from regulating firearms in a manner that is less restrictive than the State.

BE IT FURTHER RESOLVED that the Governing Body supports and endorses the following firearms legislation:

1. Creation of a New Mexico Office of Gun Violence Prevention;
2. Funding for regional and/or local collaboration to address youth gun violence;
3. Raising the age of purchase for certain rifles;
4. Placing a ban on assault-style weapons;
5. Creating mandatory minimum sentencing for illegal firearms trafficking; and
6. Enhancing the penalty for the illegal possession of a firearm during any crime, including during the illegal sale of drugs;
7. Updating the Extreme Risk Firearm Protection Order Act, or "Red Flag" statute, to allow law enforcement to act as a petitioner.

BE IT FURTHER RESOLVED that the Governing Body supports continued funding for the Violence Intervention Program fund, including money for operational capacity.

BE IT FURTHER RESOLVED that the Governing Body supports and endorses funding for interventions and responses to domestic violence, sexual assault, and human trafficking, including the expansion of a coordinated, comprehensive approach that benefits both the survivor and the perpetrator.

BE IT FURTHER RESOLVED that the Governing Body re-affirms its support for and endorsement of the establishment of the Santa Fe County Detox Center that would serve the residents of Santa Fe and northern New Mexico.

BE IT FURTHER RESOLVED that, as is consistent with Resolution No. 2022-47

(supporting state and federal legislation protecting the right to a safe abortion), the Governing Body endorses any legislation that supports reproductive rights and that would codify the right to safe abortion into law.

BE IT FURTHER RESOLVED that, as is consistent with initiatives such as what is contained in Resolution No. 2024-29, the Governing Body supports the rights of the LGBTQIA+ population such that every individual, regardless of the individual's reproductive choices, sexual orientation, or gender identity, can live, work, and pursue their dreams free from discrimination and prejudice and supports any legislation that preserves and protects the rights of the LGBTQIA+ community.

BE IT FURTHER RESOLVED that the Governing Body supports and endorses any legislation and allocation of funding designed to interrupt intergenerational cycles of poverty, such as appropriations for operations of a state-wide pilot program that provides a monthly, guaranteed income.

BE IT FURTHER RESOLVED that the Governing Body supports and endorses funding mental health and behavioral health programs focused on addressing the needs of residents and individuals struggling with mental illness and/or substance abuse or addiction, including the expansion or augmentation of treatment opportunities and facilities to support that treatment.

BE IT FURTHER RESOLVED that the Governing Body endorses any legislation that supports meaningful partnerships between State, county, and municipal governmental agencies to address fentanyl as a health crisis by removing barriers to services for those struggling with addiction, and supporting the coordination of response efforts, and funding such initiatives.

BE IT FURTHER RESOLVED that, as is consistent MOA No. 2020-0629, the Governing Body supports any legislation dedicated to the City and Santa Fe County partnership program, "CONNECT," defined by the City and County as "a network of navigators at clinics, community organizations, and city and county programs," which has successfully connected approximately ten thousand (10,000) Santa Fe County residents with resources such as housing, food, transportation, childcare, and other essential needs.

BE IT FURTHER RESOLVED that the Governing Body supports legislation that improves and affirms the City's multicultural initiatives and programs, including but not limited to Mariachi Competitions, Spanish-Language Music Festivals, Powwow Grounds, Spanish-Language literary festivals, Sister City Student Exchange programs, , culture-specific TED Talks, and that uplifts the pride and acknowledgement of the City's diverse history, specifically as it relates to associated community development.

BE IT FURTHER RESOLVED that the Governing Body re-affirms its support for and endorsement of any legislation that supports the development and construction of affordable and workforce housing to decrease and/or subsidize the cost of housing for residents of Santa Fe and New Mexico.

BE IT FURTHER RESOLVED that the Governing Body supports and endorses any legislation that increases housing availability, including transitional housing options tailored to the individual's needs, and expands available social services for homeless families and individuals, including those who are chronically homeless, veterans experiencing homelessness, and young people experiencing homelessness, as well as those living in outdoor unsupervised encampments.

BE IT FURTHER RESOLVED that the Governing Body re-affirms its support for and endorsement of any legislation that slows down the timeline for eviction, connects tenants to rental assistance resources, and improves opportunities for mediation between renters and landlords.

BE IT FURTHER RESOLVED that, as is consistent with Resolution No. 2022-52 (affirming the partnership of the City and Santa Fe County to develop strategies to end homelessness), the Governing Body supports and endorses appropriations for the expansion of program staff that supports the goals of housing preservation and homelessness prevention, emergency shelter, building housing units, individual housing vouchers, project-based housing vouchers, supportive services, and system infrastructure;

BE IT FURTHER RESOLVED that the Governing Body supports and endorses

appropriations for mental health and behavioral health programs, including the development of the Santa Fe County's Youth Behavioral Health Center and the La Salla Center, focused on addressing the needs of residents and individuals struggling with mental illness and/or substance abuse or addiction, including the expansion or augmentation of treatment opportunities and facilities to support that treatment.

BE IT FURTHER RESOLVED that the Governing Body re-affirms its support for and endorsement of any legislation that replenishes and seeks a recurring funding source to support New Mexico Mortgage Finance Authority's Housing Trust Fund.

BE IT FURTHER RESOLVED that the Governing Body supports and endorses legislation promoting the facilitation of community efforts to address the cleanup of trash, litter, and weeds which may include methods such as using compost and chipping, with a specific emphasis on elevating the quality of the City's roadways, rights of way, medians, arroyos, open spaces, trails, and parks.

BE IT FURTHER RESOLVED that the Governing Body supports the creation of and funding for a state-wide litter prevention and reduction program through messaging, marketing, advertising, and communications, such as public service announcements or new campaigns that will encourage all New Mexicans, as well as Santa Feans, to stop putting trash, littler, or other throw-away items into the streets, roadways, highways, freeways, parks, and other public spaces across the state.

BE IT FURTHER RESOLVED that the Governing Body supports and endorses legislation or appropriations to improve the environment, enhance the quality of the City's public spaces, and achieve its sustainability goals, including but not limited to funding for projects and programs that support water conservation, erosion control, tree planting, biodiversity, outdoor recreation, and public art.

BE IT FURTHER RESOLVED that that Governing Body re-affirms its support for and endorsement of any legislation that establishes an "extended producer responsibility" program that requires manufacturers and retailers to be responsible for the costs associated with a product throughout

its life cycle, from creation to disposal, and/or re-use.

BE IT FURTHER RESOLVED that the Governing Body re-affirms its support for and endorsement of any legislation that advances the environmental sustainability goals of the City, including renewable energy generation and storage, building electrification, public transportation and complete streets, carbon neutrality or net-zero greenhouse gas emissions, as well as continued support for implementation of the Community Solar Act and funding for watershed restoration and forest fire mitigation.

BE IT FURTHER RESOLVED that the Governing Body re-affirms its support for and endorsement of any legislation that would expand the Air Quality Control Act, NMSA 1978, § 74-2-2(J), to include an express option for local governments to opt-in to an emissions inspections program.

BE IT FURTHER RESOLVED that the Governing Body supports and endorses any legislation that funds the New Mexico Climate Investment Center to combat climate change that would increase green infrastructure development, energy conservation and sustainability measures, and access to funding for green energy investments for assisting lower-income individuals and families, rural communities, and pueblos.

BE IT FURTHER RESOLVED that the Governing body supports continued analysis and study of how to improve emergency response, preparation, and management strategies for addressing environmental and radiological emergencies, which could include climate change adaptation strategies and improvement to and development of emergency management infrastructure.

BE IT FURTHER RESOLVED that the Governing Body supports appropriations to New Mexico's Department of Cultural Affairs in support of the expansion of local library programming for local communities.

BE IT FURTHER RESOLVED that the Governing Body re-affirms its support for and endorsement of any legislation that would improve and expand early childhood education, with an emphasis on the following initiatives: infant and toddler care; capital improvements for center-based

and in-home care; stipend-based training opportunities for the family, friends, and neighbor network (FFN); and investment in pre-apprentice and apprenticeship programs to develop the early childcare educator pipeline.

BE IT FURTHER RESOLVED that the Governing Body endorses any legislation that supports childcare as a guaranteed, basic right for families.

BE IT FURTHER RESOLVED that the Governing Body supports legislation for early childcare apprenticeship and pre-apprenticeship programs, including expansion of the workforce to run such programs.

BE IT FURTHER RESOLVED that the City continues to support statewide paid sick leave legislation, as described in the City's Resolution No. 2021-11, unanimously passed by the members of the Governing Body in 2021.

BE IT FURTHER RESOLVED that the Governing Body urges the legislature to address the underfunding of the Public Employees Retirement Association pension plans.

BE IT FURTHER RESOLVED that the Governing Body re-affirms its support for and endorsement of any legislation that would increase funding for the New Mexico Tourism Department for use in advertising, a state-wide co-op grant program, and expansion of its advertising scope to include new markets with strong potential for travel to the state.

BE IT FURTHER RESOLVED that the Governing Body directs the City's lobbyist to oppose any legislation introduced during the Legislative Session deemed to be detrimental to the City.

BE IT FURTHER RESOLVED that the Governing Body renews its requests that the Legislature ensure that hold harmless payments to counties and municipalities are not eliminated or further reduced and returned to their original schedule; ensure that any tax reform continues to hold counties and municipalities harmless in lieu of the enactment of legislation reinstating the gross receipts tax on food and medical; and that protects local governments' annual revenues if the Legislature enacts legislation modifying State gross receipts tax deductions and exemptions.

BE IT FURTHER RESOLVED that the Governing Body supports and endorses legislation that expands the permitted uses of existing lodgers' tax or creates an additional lodgers' tax, to defray the cost of providing affordable housing, permanent supportive housing and addressing the needs of low-income people by providing wraparound services such as childcare and/or that leverages federal funding for affordable housing.

BE IT FURTHER RESOLVED that the Governing Body re-affirms its support for and endorsement of any legislation that would eliminate the three percent (3%) cap on annual property tax increases on residences that are not owner-occupied as the owner's principal place of residence.

BE IT FURTHER RESOLVED that the Governing Body re-affirms its support for and endorsement of legislation during the Legislative Session that would allow for a New Mexico Public Bank owned by and for the people of New Mexico that would direct the State's investment decisions to support and diversify the economy including achieving goals in education, eco-tourism, food security, solar energy installations, broadband expansion, health clinic upgrades, and clean energy infrastructure projects, by keeping New Mexico's money in New Mexico.

BE IT FURTHER RESOLVED that the Governing Body supports and endorses any legislation that increases the likelihood of local governments recruiting, retaining, promoting, and housing first responders and Alternative Response Unit case workers and behavioral health employees in the communities in which they serve to improve public safety and enhance emergency response capacity.

BE IT FURTHER RESOLVED that the Governing Body renews its requests that the Legislature appropriate money from the general fund to support the City's "Alternative Response Unit", which allows law enforcement officers to work with the Santa Fe Fire Department and with case managers under the supervision of a licensed Clinical Social Worker to redirect persons who are experiencing non-violent mental health episodes, public intoxication, and/or who may be suspected of involvement in non-violent, low-level crimes, to alternative, community-based services in lieu of

prosecution or jail.

BE IT FURTHER RESOLVED, if the New Mexico Supreme Court adopts the proposed case management order for the First Judicial district, then the State will allocate funding to the impacted criminal justice agencies, including law enforcement, to ensure sufficient funding to allow them to comply with the order.

BE IT FURTHER RESOLVED, that the Legislature should adopt interpretive language regarding the terms "dangerousness" and "safety" with respect to Article II, Section 13 of the New Mexico State Constitution, disallowing a narrow reading of those terms.

BE IT FURTHER RESOLVED that the Governing Body supports legislation that creates a major entertainment venue in Santa Fe for sports, concerts, and music festivals throughout the state, specifically as it relates to associated economic development.

BE IT FURTHER RESOLVED that the Governing Body re-affirms its support for and endorsement of any legislation that improves broadband infrastructure throughout the state, specifically as it relates to associated community and economic development.

BE IT FURTHER RESOLVED that the Governing Body renews its request that the Legislature adopt legislation that pertains to statewide business licensing to permit business owners to operate in all cities, counties, and municipalities, provided business owners comply with local land use and safety requirements.

BE IT FURTHER RESOLVED that the Governing Body supports any legislation that improves small business diversity throughout the state, specifically as it relates to increased tourism and associated economic development.

BE IT FURTHER RESOLVED that the Governing Body supports any legislation that supports mixed-use manufacturing with associated workforce housing, community convenience amenities, walkability, and sustainability, such as the El Lucero Development, specifically as small business manufacturing relates to associated community and economic development.

BE IT FURTHER RESOLVED that the Governing Body supports legislation that increases economic mobility efforts, specifically as these efforts relate to community and economic development.

BE IT FURTHER RESOLVED that the Governing Body supports legislation that promotes equity and entrepreneurship for the City's Hispanic Spanish-language speaking and immigrant entrepreneur communities and provides increased diversity in the City's efforts for resilient economic development.

BE IT FURTHER RESOLVED that the Governing Body directs the City's lobbyist to work with the New Mexico Municipal League in support of any Municipal League 2025 Legislative Priority from which the City would benefit from the passage of such initiative.

BE IT FURTHER RESOLVED that the Governing Body directs the City's lobbyist to make any capital outlay project directly or indirectly included in the City ICIP Priority List a priority.

BE IT FURTHER RESOLVED that the Governing Body directs the City's lobbyist to work to advance any legislation introduced during the Legislative Session deemed to be beneficial to the City.

BE IT FURTHER RESOLVED that while this Resolution represents a majority of the intent of the Governing Body as to 2025 legislative priorities, other timely priorities may be approved by the Governing Body, incorporated into the City's legislative agenda, and forwarded to the City's lobbying team for action.

BE IT FURTHER RESOLVED that the City Clerk be directed to forward a copy of this Resolution to the City's lobbyist, the City's legislative delegation, and the Governor of New Mexico.

PASSED, APPROVED, and ADOPTED this ____ day of____, 2024.

_____

ALAN WEBBER, MAYOR

ATTEST:

_____

GERALYN F. CARDENAS, INTERIM CITY CLERK

APPROVED AS TO FORM:



_____

ERIN K. McSHERRY, CITY ATTORNEY

Legislation/2024/Resolutions)/Legislative Priorities 2025

FIR No. 10626.1

FISCAL IMPACT REPORT

General Information:

(Check) **Bill:** _____ **Resolution:** X

Short Title(s): 2025 Legislative Priorities

Sponsor(s): Mayor Alan Webber

Reviewing Department(s): Public Works Department and City Attorney's Office

Staff Completing FIR: Marci Eannarino, Legislation and Policy Innovation Manager and

Christine Spiers, Legislative Assistant **Date:** 10/23/2024 **Phone:** (505) 955-6518; (505) 955-6692

Reviewed by City Attorney: _____ **Date:** Nov 7, 2024

Reviewed by Finance Director: Emily K. Oster **Date:** Nov 7, 2024

Summary:
The proposed resolution establishes the City of Santa Fe's ("City's") legislative priorities for the 2025 Legislative Session. The resolution includes citywide capital outlay requests, district capital outlay requests, and policy priorities.

Departments Affected:
All departments.

Consequences of Not Enacting Legislation:
If this legislation is not adopted, the City will have limited capital outlay and policy priorities identified prior to the 2025 New Mexico Legislative Session.

Conflict, Duplication, Companionship, or Relationship to Other Legislation:
None identified.

Performance and Administrative Implications:
The resolution would direct the City Clerk to send the adopted resolution to the City's lobbyist, the City's legislative delegation, and the Governor of New Mexico.

Fiscal Implications:
None identified.

Fiscal Impact
X Check here if no fiscal impact

Expenditures

Expenditure Type	FYE 2025	FYE 2026	FYE 2027	Require BAR (Y/N)	Recurring (R) or Non-recurring (NR)	Fund	3-Year Total Cost
Personnel and Benefits*	$	$	$				
Capital Outlay	$	$	$				
Contractual/ Professional Services	$	$	$				
Operating	$	$	$				$
Total:	$	$	$				$

Expenditure Narrative:

Revenue

Revenue Type	FYE 2025	FYE 2026	FYE 2027	Recurring (R) or Non-recurring (NR)	Fund
General Fund	$	$	$		
Special Revenue	$	$	$		
CIP	$	$	$		
Enterprise	$	$	$		
Internal Service	$	$	$		
Trust and Agency	$	$	$		
Federal	$	$	$		
Other	$	$	$		
Total	$	$	$		

Revenue Narrative:

Signature:

Email: rawheeler@santafenm.gov

Signature:

Email: cmspiers@santafenm.gov

Signature:

Email: maeannarino@santafenm.gov