**Agenda** **Regular Meeting of the Planning Commission**
**March 6, 2025 at 6:00 PM**
**Council Chambers, City Hall**
**200 Lincoln Avenue**

---

## Procedures for Planning Commission Meeting

Viewing: Members of the public may stream the meeting live on the City of Santa Fe's YouTube channel at https://www.youtube.com/user/cityofsantafe . The YouTube live stream can be accessed at this address from most smartphones, tablets, or computers.

**Live Public Comment:** Members of the public may provide public comment in person during the public comment portion of the public hearing.

**Virtual Public Comment**: Members of the public may provide public comment virtually during the public comment portion of the public hearing by joining the Zoom meeting by internet or phone using the following link: https://santafenm-gov.zoom.us/j/85610127087

**By phone:** +1 669 444 9171 US +1 669 900 6833 US (San Jose) +1 719 359 4580 US +1 253 205 0468 US +1 253 215 8782 US (Tacoma) +1 346 248 7799 US (Houston) +1 929 205 6099 US (New York) +1 301 715 8592 US (Washington DC) +1 305 224 1968 US +1 309 205 3325 US +1 312 626 6799 US (Chicago) +1 360 209 5623 US +1 386 347 5053 US +1 507 473 4847 US +1 564 217 2000 US +1 646 931 3860 US +1 689 278 1000 US

Webinar ID: 856 1012 7087

**Written Comment:** Members of the public may submit public comments by 5 p.m. on the Monday before the meeting via https://santafenm.gov/land-use/current-planning/public-comment. Comments will then be published after this deadline.

The agenda and packet for the meeting will be posted at https://santafenm.portal.civicclerk.com/

1. Call to Order
2. Pledge of Allegiance
3. Roll Call
4. Approval of Agenda

5. Approval of Consent Agenda

6. Approval of Minutes

   a. February 6, 2025

7. Approval of Findings/Conclusions

   a. **Case #2024 –7909. RKSS- Cerrillos Multifamily Development Plan.**

   b. **Case #2024-7998. Los Prados Preliminary Subdivision Plat.**

8. Consent

9. Old Business

10. New Business

    a. **Case #2022-6013. Caja del Oro Subdivision Final Subdivision Plat.** Victoria Dalton, of James W. Siebert and Associates, Inc., Agent, for the Pulte Group of New Mexico, Applicant, requests approval of a Final Development Plan for the Phase 2 portion which includes forty-four (44) single-family homes of the total 80 proposed for Phases 1 & 2 combined. The property is approximately +/- 9.07 acres of land of the +/-16.2 acres for both phases. It is located North of Caja del Oro Grant Road and East of the NM599 Frontage Road.. (Claudia Kath, Case Manager, cmkath@santafenm.gov).

    b. **Case 2024-9585. 4000 and 4200 Beckner Road Final Serial Subdivision Plat.** Orion West LLC, Agent, for Santa Fe Las Soleras Medical Development LLC, Las Soleras Center LLC, and Las Soleras Village LLC, Owners, requests approval of a final plat to subdivide Lots 18A (29.82 acres) and 18B (18.01 acres) of the Las Soleras Master Plan to create a total of six lots. The parcels are zoned C-2 (General Commercial) and are located within the Suburban Archaeological Review District. (Janice Biletnikoff, Case Manager, jibiletnikoff@santafenm.gov)

11. Staff Communications

12. Matters from the Commission

13. Adjourn

Persons with disabilities in need of accommodations, contact the City Clerk's office at 955-6521, five (5) working days prior to meeting date.

City of Santa Fe

# MINUTES

**REGULAR MEETING OF**
**THE PLANNING COMMISSION**
**February 6, 2025 AT 6:00 PM**

## A. ROLL CALL

**Commissioners Present:**
Chair Janet Clow
Vice Chair Jessica Eaton Lawrence
Commissioner Gurushabad Mirando
Commissioner Peter Smith
Commissioner Thomas (TJ) Rieland
Commissioner Sasha McGhee

## B. PLEDGE OF ALLEGIANCE

## C. APPROVAL OF AGENDA

**MOTION:** Commissioner Lawrence moved, seconded by Commissioner Mirando, to approve the agenda as presented.

**VOTE:** The motion was approved on the following Roll Call vote:

**For:**
Vice Chair Jessica Eaton Lawrence Yes
Commissioner Gurushabad Mirando Yes
Commissioner Sasha McGhee Yes
Commissioner Peter Smith Yes
Commissioner Thomas (TJ) Rieland Yes

**Against:** None

**Abstain:** None

**D. Appointment of Officers**

**Chair Clow, appointed Commissioner Smith to Vice-Chair of the Planning Commission. Commissioner Smith accepted the position, relieving his duties as Secretary. Chair Clow appointed Commissioner Mirando to Secretary.**

**E. Consent of Agenda**

1. Case #2024-9640 Plaza Contenta Development Plan Second Time Extension. Robert Gibbs, Agent for Plaza Contenta Apartments, LLC and B&R Land Investments, Applicant requests a second time extension for the approved development plan for 6001 Jaguar Drive (Case #2020-2498). The applicant is requesting a second 1-year extension to the time allowed for approvals granted by the Planning Commission on October 15, 2020.

   Commission approved the director's decision with no discussion.

**F. APPROVAL OF MINUTES:**

**1.** January 16, 2025

**MOTION:** Vice Chair Smith Motioned, seconded by Commissioner Lawrence, to approve the minutes with amendments presented by Chair Clow, to include "postponed to the February 6, 2025, Public Hearing" for projects, 2024-7900 RLS Cerillos Multifamily Development Plan and 2024-7998 Los Prados Preliminary Subdivision Plat

**VOTE:** The motion was approved on the following Roll Call vote:

**For:**
Commissioner Jessica Eaton Lawrence Yes
Vice Chair Peter Smith Yes
Commissioner Sasha McGhee Yes
Commissioner Gurushabad Mirando Yes
Commissioner Thomas (TJ) Rieland Yes

**Against:** None

**Not present:** None

## G. APPROVAL OF FINDINGS/CONCLUSIONS

2. Case #2023-7752. 4000 and 4200 Beckner Road Preliminary Serial Subdivision Plat. Orion-West LLC, Agent, for Las Soleras Center LLC, Las Soleras Village LLC and Santa Fe Las Soleras Medical Development LLC, owners and applicants ("Applicant"), request approval of a Preliminary Serial Subdivision Plat per SFCC 1987 § 14-3.7 ("Subdivision of Land"), to further subdivide two existing parcels within the Las Soleras Master Plan into a total of six parcels. Parcel "18A" is 29.82 acres and is located at 4000 Beckner Road. Parcel "18B" 18.01 acres and is located at 4200 Beckner Road. Both parcels are zoned C-2 (General Commercial) and within Suburban Archaeological Review District. (Janice Biletnikoff, AICP, Case Manager, jibiletnikoff@santafenm.gov)

**MOTION:** Commissioner Mirando motioned, seconded by Commissioner Lawrence, to approve Findings for Case #2023-7752 without changes or corrections.

**VOTE:** The motion was approved on the following Roll Call vote:

**For:** Commissioner Jessica Eaton Lawrence Yes
Vice Chair Peter Smith Yes
Commissioner Sasha McGhee Yes
Commissioner Gurushabad Mirando Yes
Commissioner Thomas (TJ) Rieland Yes

**Against:** None

**Abstain:** None

3. Case #2024-8898. 214 Camino De Los Marquez Rezoning. JenkinsGavin, Inc., Agent, for Santa Fe Opera, Owner/Applicant, requests the Planning Commission recommend and the Governing Body approve and adopt an Ordinance to rezone 2.50 acres located at 214 Camino De Los Marquez from R-21 PUD (Residential Twenty-one dwellings per acre, Planned Unit Development) to R-29 (Residential Twenty-nine dwellings per acre), including removal of the PUD from the subject property. The Property is located within the Suburban Archaeological Review District and the River and Trails Archaeological Review District. (Janice Biletnikoff, Case Manager, jibiletnikoff@santafenm.gov)

**MOTION:** Commissioner Mirando Motioned, seconded by Vice Chair Smith, to approve Findings for Case #2024-8898 without changes or corrections**.**

**VOTE:** The motion was approved on the following Roll Call vote:
**For:** Vice Chair Peter Smith Yes
Commissioner Sasha McGhee Yes
Commissioner Gurushabad Mirando Yes
Commissioner Thomas (TJ) Rieland Yes

**Against:** None

**Abstain:** Commissioner Jessica Eaton Lawrence

4. Case #2024-8550. Fiesta Nissan Dealership Development Plan. Lloyd & Associates, Agent, for 2015 Cerrillos, road Properties LLC, Applicant, requests Development Plan approval to construct approximately 25,541 square feet of new construction for an automotive dealership on 6.131± acres. The site is zoned C-2 (General Commercial) and is located at 4994 Governor Miles Road. (Dan Esquibel, Case Manager) **(POSTPONED TO MARCH 6, 2025, PUBLIC HEARING)**

5. Case #2024-9304. Fiesta Hyundai Dealership Development Plan. Lloyd & Associates, Agent, for 2015 Cerrillos, road Properties LLC, Applicant, requests Development Plan approval to construct approximately 20,894 square feet of new construction for an automotive dealership on 5.860± acres. The site is zoned C-2

(General Commercial) and is located at 6590 Cerillos Road. (Dan Esquibel, Case Manager) **(POSTPONED TO MARCH 6, 2025, PUBLIC HEARING)**

## H. OLD BUSINESS

## I. NEW BUSINES

**1.** Case #2024 –7909. RKSS- Cerrillos Multifamily Development Plan. JenkinsGavin, Agent, for RKSS Santa Fe 1, LLC, Owner, requests approval of a development plan to establish development standards for a 192,570 SF, 194-unit multifamily development located at 3471, 3431, 3435, 3439 and 3443 Cerrillos Road and 3420 + 3450 Rufina Street over five lots totaling approximately 7.5 acres. The property is zoned C-2 and R-3 (General Commercial and Residential – 3 unit per acre) and is within the Cerrillos Road Highway Corridor (Daniel Alvarado, Case Manager, djalvarado@santafenm.gov, 955-6670)

**MOTION:** Commissioner Mirando motioned, seconded by Vice Chair Smith, to approve 2024-7909, RKSS Cerillos Multifamily Development Plan

**VOTE:** The motion was approved on the following Roll Call vote:

**For:**
Commissioner Jessica Eaton Lawrence Yes
Vice Chair Peter Smith Yes
Commissioner Sasha McGhee Yes
Commissioner Gurushabad Mirando Yes
Commissioner Thomas (TJ) Rieland Yes

**Against:** None

**Abstain:** None

**2.** Case #2024-7998. Los Prados Preliminary Subdivision Plat. JenkinsGavin, Inc., Agent, for HomeWise, Inc., owner and applicant (“Applicant”), requests review and approval of a Preliminary Subdivision Plat for a 97-unit residential development consisting of 42 townhomes and 55 single-family detached homes, as well as the development of a 5.12-acre public park. The subject

14.41-acre parcel is located at 3730 South Meadows Road and is zoned R-6 (six residential units per acre). (Janice Biletnikoff, AICP, Case Manager, jbiletnikoff@santafenm.gov).

**MOTION:** Commissioner Lawrence motioned, seconded by Vice Chair Smith, to approve, 2024-7998. Los Prados Preliminary Subdivision Plat, subject to conditions of approval and technical corrections.

**VOTE:** The motion was approved on the following Roll Call vote:

**For:** Commissioner Jessica Eaton Lawrence Yes
Vice Chair Peter Smith Yes
Commissioner Sasha McGhee Yes
Commissioner Gurushabad Mirando Yes
Commissioner (TJ) Rieland Yes

**Against:** None

**Abstain:** None

## I. STAFF COMMUNICATIONS

a. Water budgets and water offsets presentation y Jesse Roach, Water Division Director, Public Utilities.

## J. MATTERS FROM THE COMMISSION

## K. ADJOURNMENT

**8:28 P.M.**

Liaison

Chair

# City of Santa Fe
# Planning Commission
# Findings of Fact and Conclusions of Law

**Case #2024-7909**
**RKSS-Cerrillos Multifamily Development Plan**

**Owner's/Applicant's Name**- RKSS Santa Fe 1, LLC
**Agent's Name**- JenkinsGavin

THIS MATTER came before the Planning Commission (Commission) for public hearing on January 17th, 2025 (Hearing) upon the development plan application (Application) of JenkinsGavin as agent for RKSS Santa Fe 1, LLC (Applicant).

The Application pertains to the property located at 3471, 3431, 3435, 3439 and 3443 Cerrillos Road and 3420 + 3450 Rufina Street over five lots totaling approximately 19.6 acres (Property). The Applicant requests approval of a development plan for a 192,570 SF, 194-unit multifamily development (Project). The property is zoned C-2 and R-3 (General Commercial and Residential – 3 unit per acre) and is within the Cerrillos Road Highway Corridor.

After conducting a public hearing and having heard from staff and all interested persons, the Commission hereby FINDS, as follows:

## FINDINGS OF FACT

### General

1. The Applicant requested approval of a development plan for 5 multifamily buildings totaling 192,570 SF.
2. At the hearing, the Commission received reports from staff, testimony and evidence from the Applicant, and testimony offered by any interested members of the public.
3. SFCC 1987 Section 14-3.1 sets out certain procedures to be followed on the Application, including, without limitation, (a) a pre-application conference [SFCC 1987 § 14-3.l(E)]; (b) an Early Neighborhood Notification (ENN) meeting [SFCC 1987 §1 4-3.1(F)(2)(a)(iv)]; and (c) compliance with notice and public hearing requirements [SFCC 1987 § 14-3.1(H)-(I)].
4. The Applicant attended a pre-application conference on January 27th, 2023, with City Land Use Department Staff (City Staff).
5. The Applicant conducted an ENN meeting for this project. The Applicant gave notice of the ENN meetings to neighbors and neighborhood associations within 300 feet of the subject property and posted posters on the subject property.
6. The Applicant held the virtual ENN meeting on November 6th, 2023. The ENN meeting was attended by members of the applicant team, city staff, and approximately 30 members of the public. The applicant team presented an overview of the proposed development and received questions from the public and City staff. Questions include addressing issues of pedestrian access to Cerrillos road, the nature of the housing in the development, potential buffers between the proposed development and existing units, and future vehicular access to the Trailer Ranch Mobile Home Community.

7. City staff reviewed the Application, as well as the related materials and information submitted by the Applicant for conformity with applicable SFCC requirements. Staff also provided the Planning Commission with a written report of its findings (Staff Report), which evaluates the factors relevant to the Application.
8. Staff recommended that the Commission approve the development plan, subject to certain conditions (the Conditions) and the technical corrections set forth in the Staff Report and exhibits.
9. Pursuant to SFCC 1987 Section 14-2.3(C)(1), the Commission has the authority to review and approve development plans.

Development Plan

10. Under SFCC 1987 Section 14-3.8(B)(3)(a), a new development with a gross floor area of thirty thousand (30,000) square feet or more requires approval of a development plan.
11. SFCC 1987 Section 14-3.8 establishes certain procedures for development plan approval including, without limitation, a public hearing by the Commission and a decision based on the criteria set out in SFCC 1987 Section 14-3.8(D).
12. SFCC 1987 Section 14-3.8(C)(1) requires the Applicant to submit plans and other documentation that demonstrates conformance with applicable provisions of the SFCC (Submittal Requirements).
13. SFCC 1987 Section 14-3.8(D)(1) sets out approval criteria and requires the Commission to make complete findings of fact sufficient to show that these criteria have been met before approving a development plan.
14. Pursuant to SFCC 1987 Section 14-3.8(D)(2), the Commission "may specify conditions of approval that are necessary to accomplish the proper development of the area and to implement the policies of the general plan."
15. Under SFCC 1987 Section 14-1.3, the Governing Body has implemented the General Plan and ordinances in order to establish minimum standards for health, safety and welfare affecting land uses and developments as a means to protect the public interest. Multifamily residential developments are a permissible land use under both the zoning district, C-2, and the Future Land Use designations, Community Commercial and Transitional Mixed Use. Therefore, the proposed development meets the goals of the General Plan is not adverse to the public interest.
16. The proposed use is compatible with the neighboring uses, buildings and structures. There are several other multifamily developments in the immediate vicinity, and the property is well served by transit access and amenities on Cerrillos Rd. The development has taken into account the possible impact to the adjacent Trailer Ranch Mobile Home Community and has made efforts to reduce negative impact to the community by declining vehicular access through the community, providing pedestrian access through the development and moved the development away from existing residences to the extent possible.

## CONCLUSIONS OF LAW

Under the circumstances and given the evidence and testimony submitted during the hearing, the Commission CONCLUDES as follows:

General

1. Pursuant to SFCC 1987 Section 14-3.1, all procedural requirements regarding the pre-application conference, ENN meeting, and notice of public hearing have been met.

Development Plan

2. The Commission has the authority to review and to approve the development plan, and to impose conditions of approval.
3. The information contained in the Staff Report and exhibits is sufficient to establish that the Submittal Requirements have been met.
4. The Commission finds that it has the authority to review the development plan under SFCC 1987 Sections 14-2.3(C)(1), 14-3.8(B)(4), and Table 14-2.1-1, as required by SFCC 1987 Section 14-3.8(D)(1)(a).
5. The Commission finds that the development plan does not adversely affect the public interest, as required by SFCC 1987 Section 14-3.8(D)(1)(b).
6. The Commission finds that the proposed use is compatible with the neighboring uses, buildings and structures. The proposed use is compatible with the neighboring uses, buildings and structures required by SFCC 1987 Section 14-3.8(D)(1)(c).
7. The Commission finds that the Conditions and Technical Corrections set forth in the Staff Report and exhibits are necessary to accomplish the proper development of the area and to implement the policies of the general plan.
8. 
9. The Applicant met the applicable Submittal Requirements.
10. The Commission approves the development plan subject to the conditions and technical corrections recommended by staff because all applicable code requirements and criteria for development plan approval have been met.

**WHEREFORE, IT IS ORDERED ON THE 6th DAY OF MARCH, 2025 BY THE PLANNING COMMISSION OF THE CITY OF SANTA FE:**

Considering the foregoing findings and conclusions, the Commission approves the development plan for the Property, as requested in the Application for Case #2024 - 7909, subject to the Conditions and the technical corrections set forth in the Staff Report and exhibits. The development plan shall expire three years after issuance of this final action unless actual development of the site or off-site improvements has begun and is continued pursuant to Subsection 14-3.19(B)(6). If the development plan approval expires, approval of any corresponding preliminary development plan expires simultaneously pursuant to SFCC 1987 Section 14-3.19(B)(4).

Janet Clow, Chair Date

FILED:

_____ _____
Geralyn F. Cardenas Date
City Clerk

APPROVED AS TO FORM:

_____ _____
Rebecca Mnuk-Herrmann Date
Assistant City Attorney

City of Santa Fe
Planning Commission
Findings of Fact and Conclusions of Law

**Case #2024-7998: Los Prados Preliminary Subdivision Plat**
**3730 South Meadows Road**
**Owner/Applicant's Name -** Homewise, Inc.
**Agent's Name -** JenkinsGavin, Inc.

THIS MATTER came before the Planning Commission (Commission) for hearing on February 6, 2025, upon the application (Application) of JenkinsGavin, Inc., agent for Homewise, Inc. (Applicant).

The Applicant sought the Commission's approval of a preliminary subdivision plat for ninety-seven (97) single-family lots on approximately 14.41 acres (Project). The property is located at 3730 South Meadows Road (Property) and is zoned R-6 (Residential - six dwelling units per acre).

After conducting a public hearing and having heard from staff and all interested persons, the Commission hereby FINDS, as follows:

## FINDINGS OF FACT

1. At the hearing, the Commission received reports from staff, testimony and evidence from the Applicant, and testimony offered by interested members of the public.
2. The Santa Fe City Code (SFCC) 1987 Section 14-3.1 sets out certain procedures to be followed on the Application, including, without limitation, (a) a pre-application conference [SFCC 1987 § 14-3.l(E)]; (b) an Early Neighborhood Notification (ENN) meeting [SFCC 1987 § 14-3.1(F)(2)(a)(v)]; and (c) compliance with notice and public hearing requirements [SFCC 1987 § 14-3.1(H)-(I)].
3. A pre-application conference was held on July 07, 2021, in accordance with SFCC 1987 Section 14-3.l(E).
4. The Applicant effected notice by: mailing out notice via first-class mail to property owners within 300 feet of the subject property on December 30, 2024, and e-mailing neighborhood associations within 300 feet; and posting the required City sign on the property from December 30, 2024, to February 6, 2025.
5. The Applicant conducted one ENN on February 21, 2024. The ENN meeting was conducted virtually via Zoom. The meeting was attended by a representative of the Applicant and City staff. The meeting was well attended by the public.
6. SFCC 1987 Section 14-3.7(B)(3)(b) requires the Applicant to submit a preliminary plat prepared by a professional land surveyor, together with improvement plans and other specified supplementary material that demonstrates conformance with the standards of SFCC 1987 Section 14-9 (Submittal Requirements).

7. City staff reviewed the Application and all related materials and information submitted by the Applicant for conformity with applicable SFCC requirements and provided the Commission with a written report of its findings (Staff Report), which evaluates the factors relevant to the Application.
8. Staff recommended that the Commission approve the preliminary subdivision plat, subject to conditions and technical corrections set out in the attachments to the Staff Report.
9. SFCC Section 14-3.7(B)(3) establishes certain procedures for preliminary subdivision plat approval including, without limitation, a public hearing by the Commission, review of the final plat, and a decision based on the criteria set out in SFCC Section 14-3.7(C).
10. SFCC 1987 Section 14-3.7(C) sets out approval criteria and requires the Commission to make complete findings of fact sufficient to show that these criteria have been met before approving a preliminary subdivision.
11. There are no significant natural features, water courses, or historical sites on the subject property, and natural areas of stormwater collection are to remain in their current location.
12. No portion of the proposed subdivision lots fall within the 100-year flood zone.
13. The plat does not create any nonconformities or increase any existing nonconformities, and no variances or exceptions are requested or needed.

## CONCLUSIONS OF LAW

Under the circumstances and given the evidence and testimony submitted during the hearing, the Commission CONCLUDES as follows:

1. Pursuant to SFCC Sections 14-2.3(C)(1) and 14-3.7(B)(3)(d), the Commission has the authority to review and approve or deny preliminary subdivision plats.
2. Pursuant to SFCC Section 14-3.1, all procedures regarding the pre-application conference, ENN meeting, notice, and public hearing requirements have been followed.
3. The Applicant met the applicable Submittal Requirements of SFCC Sections 14-3.1(C), (G) and (L).
4. Pursuant to SFCC 1987 Section 14-3.7(C)(1), the Commission finds that due regard has been shown for all natural features.
5. Pursuant to SFCC Section 14-3.7(C)(2), the Commission finds that the land is suitable for platting and development purposes of the kind proposed.
6. Pursuant to SFCC Section 14-3.7(C)(3), the Commission finds that, subject to the conditions of approval and technical corrections included in the Staff Report, the plat complies with the infrastructure design, improvement and dedication standards set forth in SFCC Section 14-9. The proposed preliminary plat identifies the location of existing and proposed roadway improvements, wet and dry utilities, and other infrastructure elements such as stormwater management facilities. The street network layout, design of blocks and lots, roadway typologies, and the utility and storm drainage infrastructure meet the requirements of SFCC Section 14-9.

7. The plat complies with SFCC Section 14-3.7(C)(4)-(5) because it neither creates nor increases any nonconformities.
8. The preliminary subdivision plat should be approved, subject to the conditions of approval and technical corrections set forth in the Staff Report, because all applicable code requirements and criteria for preliminary subdivision plat approval have been met.

**WHEREFORE, IT IS ORDERED ON THE 6TH DAY OF MARCH 2025 BY THE PLANNING COMMISSION OF THE CITY OF SANTA FE:**

Considering the foregoing findings and conclusions, the Commission approves the preliminary subdivision plat for the Project, subject to the conditions of approval and technical corrections set forth in the exhibits to the Staff Report. Approval of the preliminary subdivision plat will expire on February 6, 2028, unless the plat is filed for record with the County Clerk, or an extension is granted under SFCC Section 14-3.19.

_____ _____

Janet Clow
Chairperson

Date:

FILED:

_____ _____

Andréa Salazar
City Clerk

Date:

APPROVED AS TO FORM:

_____ _____

Rebecca A. Mnuk-Herrmann
Assistant City Attorney

Date:

# Planning and Land Use Department
# Planning Commission Staff Report

CITY OF SANTA FE

| | |
|---|---|
| **Case No:** | 2022-6013 |
| **Hearing Date:** | March 6, 2025 |
| **Applicant:** | Pulte Group of New Mexico |
| **Agent:** | NM Land Solutions, LLC |
| **Request:** | Development Review for Phase 2 |
| **Location:** | +/-9 acres north of Caja del Oro Grant Road |
| **Case Mgr.:** | Claudia Kath |
| **Zoning:** | R-10 (10 du/acre) |
| **Pre-app. Mtg:** | May 11, 2021 & April 8, 2021 |
| **ENN Mtg.:** | August 10, 2021 |
| **Proposal:** | Final Subdivision Plat for the northern Phase-2 portion of the project which contains forty-four (44) lots and is situated on approximately 9.07 acres of land. |

Site Location Map:

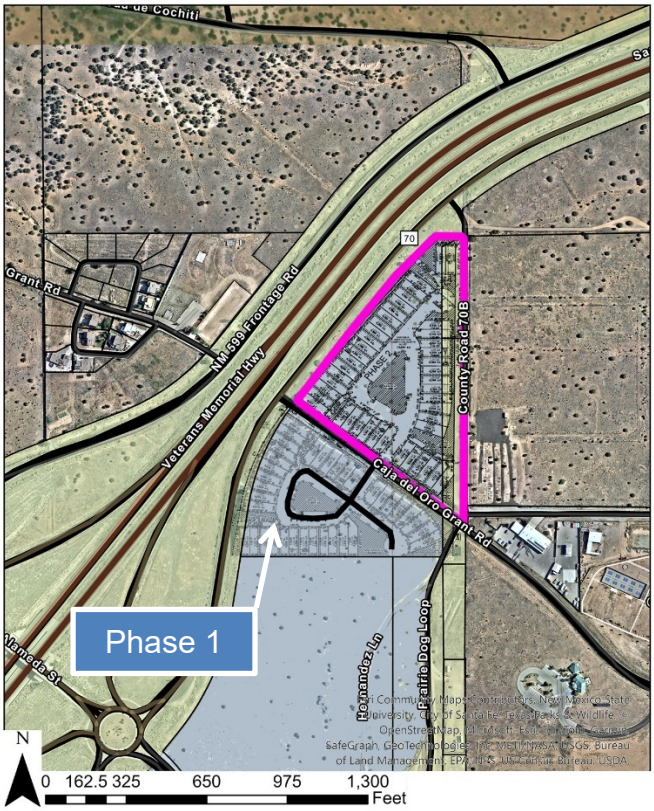


**Case #2022-6013. Caja del Oro Final Subdivision Plat for Phase 2.** Victoria Dalton, of New Mexico Land Solutions, LLC, Agent, for the Pulte Group of New Mexico, Applicant, requests approval of a Final Subdivision Plat for Phase 2 of the Caja del Oro phased subdivision consisting of forty-four (44) single-family homes for a total eighty (80) homes for Phases 1 & 2 combined. The property is approximately +/- 9.07 acres of land of the full +/-16.2 acres for both phases. It is located North of Caja del Oro Grant Road and East of the NM599 Frontage Road. (Claudia Kath, Case Manager, cmkath@santafenm.gov , 955-6661).

## I. RECOMMENDATION:

Staff recommends **APPROVAL** of the Final Subdivision Plat (Case #2022-6013), with the conditions of approval and technical corrections listed in Attachments A & B of this report.

*One motion will be required, for this case:*

- *Approve or deny the Final Subdivision Plat (Case #2022-6013), subject to the conditions of approval and technical corrections recommended by staff. See Attachments A and B.*

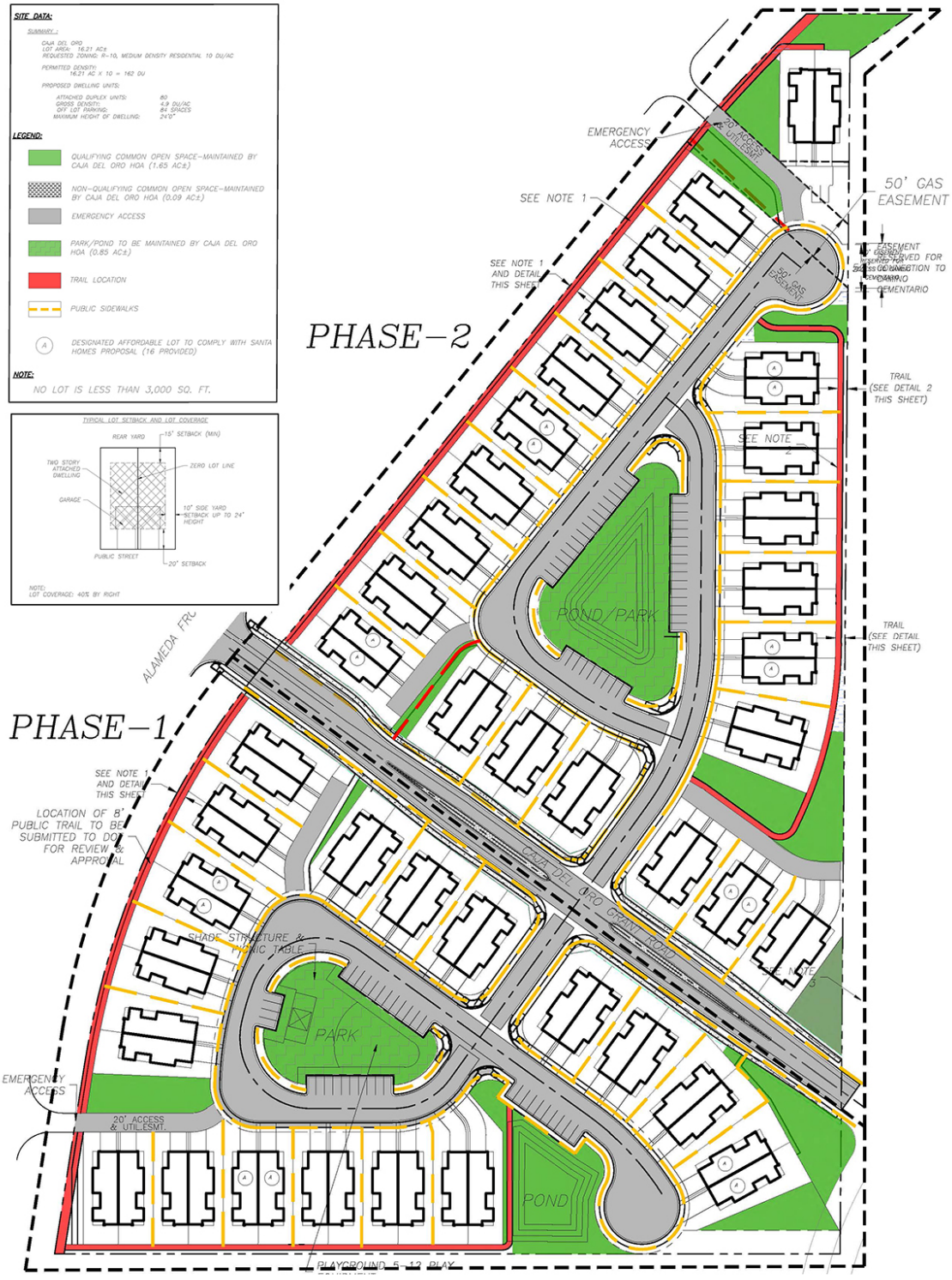


*Figure 1 Approved Final Subdivision Plan Phase 2*

## II. EXECUTIVE SUMMARY

The Applicant seeks Final Subdivision Plat Approval for Phase-2 (+/- 9.45 acres) of the overall +/-16.21 acres of the Prado Caja del Oro subdivision (the "Project"). The property is zoned Residential 10 dwelling units per acre (R-10). Phase-2 includes forty-four (44) dwelling units. Thirty-four (34) units will be market rate and ten (10) will be affordable.

The average density for Phase 2 will be 4.85 dwellings per acre. Phase 2 Open Space Park Land / Pond will be .18 acre. The proposed lots will all be larger than 3,000 square feet. The Development Plan for Phase 2 of Caja Del Oro, establishing site design for building setbacks, height and open space, etc. was previously approved by the Planning Commission on December 1, 2022 (Case#: 2022-6012 for Preliminary Plat Phase and Development Plan.) The Planning Commission approved Phase 1 of the Final Subdivision Plat on December 1, 2022(Case#: 2022-6013 ).

The Applicant has complied with Subsections 14-3.1(E) *"Pre-Application Conferences",* 14-3.1(F) "*Early Neighborhood Notification Procedures*" and 14-3.1(H) *"Notice Requirements".* Staff's analysis finds that the Applicant has addressed the necessary findings and recommends **APPROVAL** of the final subdivision plat, subject to conditions and technical corrections of approval.

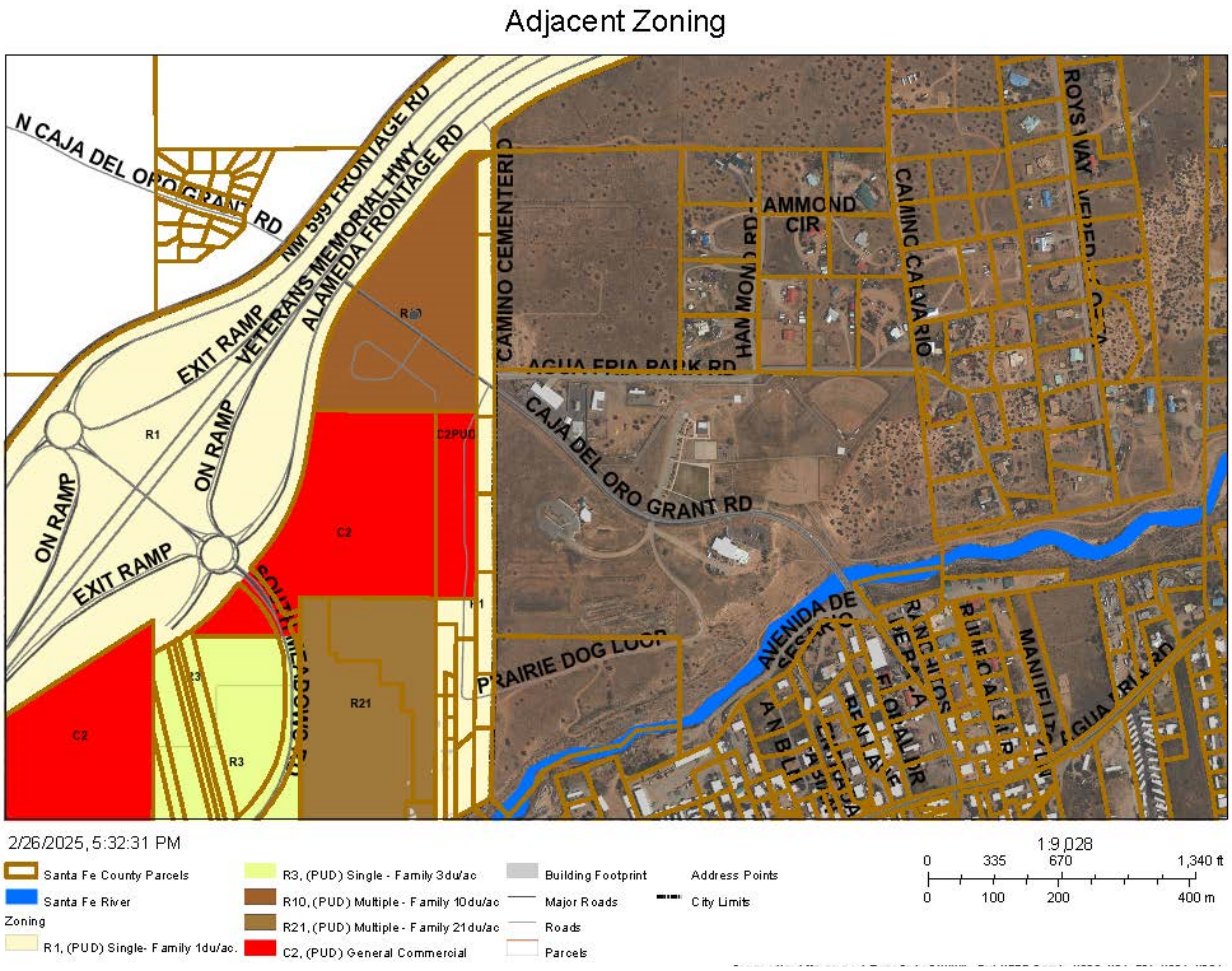


*Figure 2 Adjacent Zoning*

## III. SITE ANALYSIS

### A. Adjacent Properties

The subject property, Phase 2 of the Caja del Oro subdivision, is +/- 9.07 acres in size and defined by an easement along the existing Caja del Oro Grant Road. There is an existing cemetery to the east and it is separated by approximately 100 feet from the most easterly boundary of the Caja del Oro subdivision. Adjacent uses are shown in Table 2 'Adjacent Uses and Zoning' and Figure 2 'Adjacent Zoning'.

*Table 1. Adjacent Uses and Zoning*

| Direction | Property Address | Zoning |
|---|---|---|
| North | 599 Highway | |
| East | Cementerio de La Agua Fria | County Jurisdiction |
| South | Don Juan's Land | C-2 (General Commercial) |
| West | 599 Highway | |

**B. Overlay Districts**

**Archeology**

As part of the due diligence process for this development project, an archaeological survey was conducted by archaeologist Ron Winter on the subject property. The survey found no historical material or artifacts of significant value according to established archaeological standards. The archeological clearance letter is included in Attachment B.

**C. Parking**

In Phase 2 of the subdivision, each dwelling unit is required to provide a minimum of 2 off-street parking spaces. Staff find that the applicant complies with this standard per City Code Section 14-86 and in accordance with Table 14-8.6-1. Phase 2 will also provide 43 additional on-street, 90-degree parking spaces, including 2 accessible spaces, which are located around the open space area of the subdivision.

**D. Traffic**

Caja del Oro Grant Road has two 10-foot-wide lanes and is classified as a major collector street. Alameda Road is located on the eastern boundary of the property. This roadway also is the frontage road to NM 599 and is owned and maintained by the New Mexico Department of Transportation (NMDOT).

Caja del Oro Grant Road will serve as the primary access point for both phases of the proposed development. Both Phase 1 and 2 gain access off Caja Del Oro Road. Phase 2 access will be aligned across from the Phase 1 entrance. Both Phases connect to Alameda through emergency only access points.

The City's Development Review Team (DRT) reviewed the Applicant's traffic impact analysis (TIA) The DRT found no traffic engineering impediments for the proposed development. Traffic Comments can be found in Attachment B.

**E. Open Space, Park Land and Trails**

The proposed subdivision is compliant with City Ordinance 14-7.5 'Open Space Standards' for not only common open space requirements but also water harvesting. There are centralized ponding areas and common landscaped spaces on each of the two parcels, featuring trees, grass, and benches, which satisfies the open space requirements for the whole subdivision. The subdivision further complies with Chapter 14-8.15(C)(3) Neighborhood Park Requirement:

> *"(3) Where land is to be dedicated to the city for parks, open space and recreation facilities , the amount of land dedicated shall be calculated as follows, in accordance with Subsections 14-8.15(A)(4) and (5):*
> *(a) neighborhood parks - six one-thousandths acres per new housing unit; "*

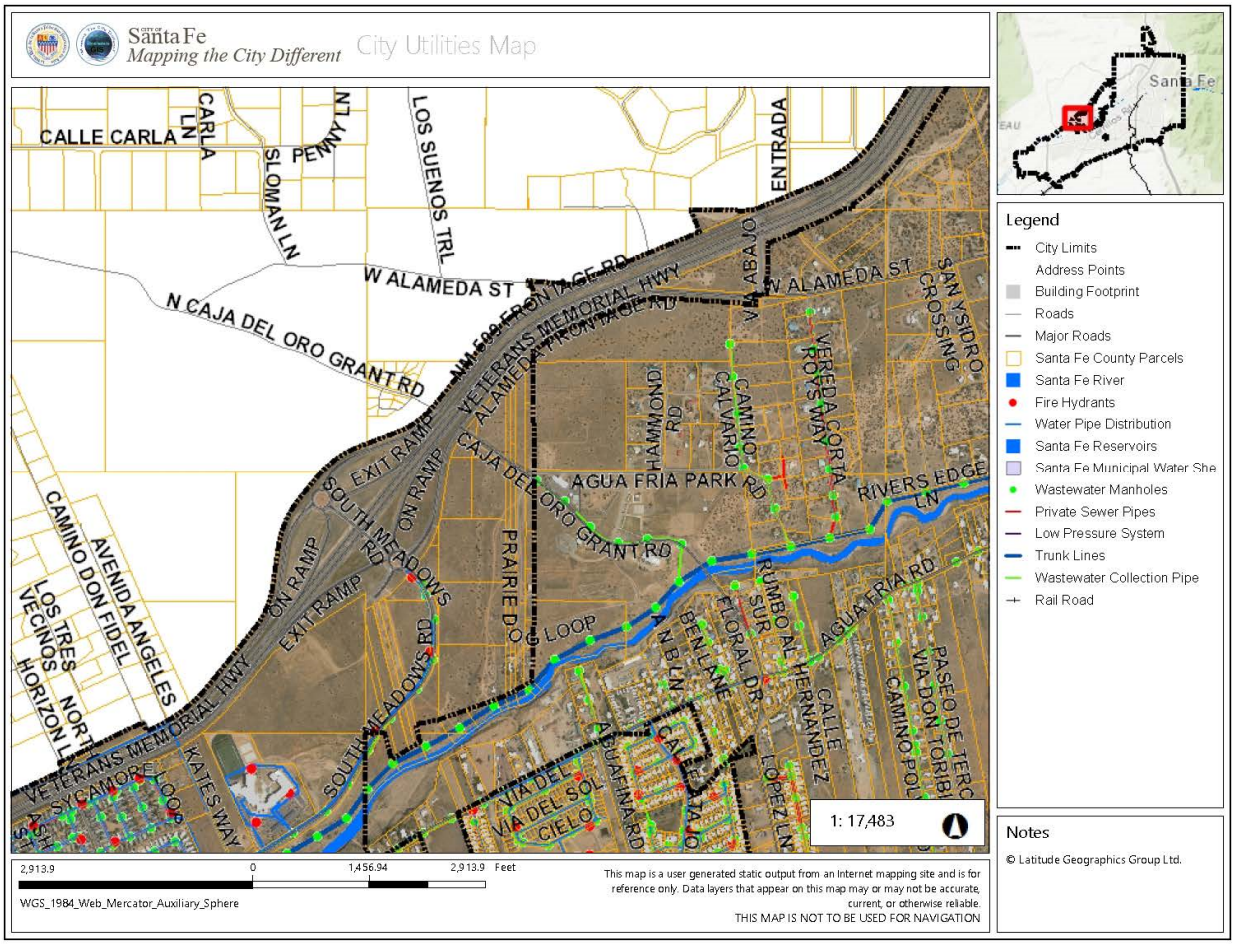


*Figure 3 Proposed Trails*

### F. Utilities

The Applicant will extend dry utilities (gas, electric and cable) along Caja del Oro road and stub into the subdivision. Wet utilities, including a 12" water and 8" sewer main, will be extended from South Meadows along Caja del Oro to the subdivision. Comments from the Water Division can be found in Attachment B. There are no comments from Waste Water.

### G. Fire

The Applicant proposes two fire hydrants in Phase 2 of the final subdivision plat, one at the south portion of the cul-de-sac and the second at the southwest corner of the park along Caja Del Oro loop. City Fire Marshall comments and condition can be found in Attachments A & B.

### H. Terrain Management

The property generally slopes from north to south with the average slope being less than five percent (5%) grade. The site naturally drains southward. The Land Use Technical Review Division has reviewed the terrain management plan for phase 2. Technical comments can be found in Attachments B.

## Caja del Oro Subdivision

**Google Earth and Street View**




*Figure 4 View of Overall Area*

### I. Landscape

Staff finds the Landscape Plan complies with Section 14-8.4 – 'Landscape Site Design' for a planted and irrigated landscape for the subdivision. The common open space element is designed as a landscape area with trees, grass and benches. Per 14-8.15(C)(3)(a) the City requirement for neighborhood parks is .006 acre per dwelling. Forty-four dwellings in Phase 2 requires .264 acres of park land. The city does not accept park areas of less than one acre for maintenance. The homeowner's association, therefore, will be responsible for maintenance of the park land.

### J. PUBLIC SCHOOLS

The public schools serving the district in which the project is located are:

- El Camino Real Academy – 2500 South Meadows Road, Santa Fe, NM 87507
- Capital High School – 4851 Paseo del Sol, Santa Fe, NM 87507

The Applicant submitted a report to the Santa Fe Public Schools, as required by City Code 14-8.16. The response from Santa Fe Public Schools has indicated that the district has the capacity to accommodate the additional students generated by this development.

### K. COMPLIANCE WITH SANTA FE AFFORDABLE HOME ORDINANCE

In accordance with 26-1.15 Santa Fe Affordable Homes Ordinance, 20% of the homes in the development must be designated as affordable housing for qualifying families. A total of 16 affordable homes will be provided to meet this requirement:

- **Phase 1**: 6 Affordable Homes

- **Phase 2**: 10 Affordable Homes



*Figure 5 View along Caja del Oro Grant Road*




*Figure 6 View to Caja del Oro Rd from Frontage Road*

## IV. FINAL SUBDIVISION PLAT

SFCC Section 14-3.7 governs the authority, procedures and restrictions for the division of land. SFCC Subsection 14-3.7(B)(3)(d) states that "The Planning Commission shall review the final plat and other materials submitted for conformity to this article, consider the Land Use Director report and recommendations and require any changes deemed advisable and the kind and extent of improvements to be made by the subdivider."

The criteria for approval of a Final Subdivision are detailed below:

| | |
|---|---|
| **Criterion 1: *§14-3.7(C)(1)*- In all subdivisions, due regard shall be shown for all natural features such as vegetation, water courses, historical sites and *structures*, and similar community assets that, if preserved, will add attractiveness and value to the area or to Santa Fe.** | **Criterion Met:** (Yes/No) **YES** |
| ***Applicant Response:*** *An archaeological report has been prepared by Ron Winters, Archaeologist. No sites of historical significance were found within any of the tracts that are included within the boundaries of this project. There a very few "significant trees" on the property with the principal vegetation being native grasses and one-seed juniper trees. There are no well-defined drainage ways located on the property.* | |
| **Staff Response:** Ron Winters, Archaeologist, has compiled an archaeological report. The tracts included in this project do not contain any historically significant sites. The property has only a small number of "significant trees," with native grasses and one-seed juniper trees being the dominant vegetation. There are no clearly defined drainage features present on the property. | |
| **Criterion 2: The planning commission shall give due regard to the opinions of public agencies and shall not approve the *plat* if it determines that in the best interest of the public health, safety or welfare the land is not suitable for *platting* and *development* purposes of the kind proposed. Land subject to *flooding* and land deemed to be topographically unsuited for building, or for other reasons uninhabitable, shall not be *platted* for *residential* occupancy, nor for other uses that may increase danger to health, safety or welfare or aggravate *erosion* or *flood* hazard. Such land shall be set aside within the *plat* for uses that will not be endangered by periodic or occasional inundation or produce unsatisfactory living conditions. See also Section 14-5.9 (Ecological Resource Protection Overlay District) and Section 14-8.3 (Flood Regulations).** | **Criterion Met:** (Yes/No) **YES** |
| ***Applicant Response:*** *This land presents minimal constraints to development. Various city review agencies will provide comments on the construction plans submitted as part of the development review process following final plat approval. All conditions of approval and technical review comments must be addressed by city staff.*<br><br>*Dry utilities are available along Caja del Oro Grant Road, and the land is exceptionally flat, facilitating effective drainage management. With the exception of a gas easement at the northern end of the northern parcel, there are very few limitations to development. Access is provided via NM 599 Frontage Road, Alameda Frontage Road, and Caja del Oro Grant Road.*<br><br>*Sewer infrastructure is located nearby on Caja del Oro Grant Road and is capable of serving the development. A* | |

| |
|---|
| *major water line will be constructed from off-site, meeting city requirements, and will become part of the city infrastructure upon completion and acceptance by city staff.* |
| **Staff Response:** The Development Review Team (DRT) reviewed the site in due regard to flooding, topographic restrictions, and proposed use. The land was found to be habitable, suitable for development and compliant with Chapter 14 code. |

| | |
|---|---|
| **Criterion 3: All *plats* shall comply with the standards of Chapter 14, Article 9 (Infrastructure Design, Improvements and Dedication Standards).** | **Criterion Met:** (Yes/No) **YES** |
| ***Applicant Response:*** *Every effort has been made to ensure that the proposed subdivision complies with Chapter 14, Article 9. The interior roadways are designed as public roads, and the city utility infrastructure is developed to meet the standards outlined in Article 9.*<br>*The City Water Division has modeled the domestic demand and fire-flow requirements for the subdivision. The main line serving the project is designed according to city specifications.*<br>*CAJA DEL ORO AKA PRADO SUBDIVISION - FINAL PLAT (PHASE 2)*<br>*Preliminary discussions with city staff regarding wastewater services indicate that no issues or concerns are anticipated with connecting to the city's wastewater lines.* | |
| **Staff Response:** The Development Review Team (DRT) has reviewed the Applicant's proposed subdivision design. Review comments and conditions from the DRT provide necessary changes to the proposal to comply with the City Code in order to meet minimum standards for health, safety or welfare. The subdivision infrastructure such as road, utilities and terrain management have been reviewed by the DRT for compliance to Article 14-9 *"Infrastructure Design, Improvements and Dedication Standards."* | |
| **Criterion 4: A *plat* shall not be approved that creates nonconformity or increases the extent or degree of an existing nonconformity with the provisions of Chapter 14 unless a variance is approved concurrently with the *plat*.** | **Criterion Met:** (Yes/No) **YES** |
| ***Applicant Response:*** *The proposed development is situated on vacant land with no existing nonconformities. The previously approved General Plan Amendment and Rezoning request to change the zoning from R-1 to R-10 aligns the density and design of the subdivision with Chapter 14 provisions. Additionally, no variances have been requested for this property to facilitate the proposed development.* | |
| **Staff Response:** Staff agrees with the Applicant's response. No non-conformities exist on the land and no variances have been requested for this Case. | |
| **Criterion 5: A *plat* shall not be approved that creates a nonconformity or increases the extent or degree of an existing nonconformity with applicable provisions of other chapters of the Santa Fe City Code unless an exception is approved pursuant to the procedures provided in that chapter prior to approval of the *plat*.** | **Criterion Met:** (Yes/No) **YES** |

| |
|---|
| ***Applicant Response:*** *The property has been successfully rezoned from R-1 to R-10, and C-2 to R-10, with approvals from the Governing Body, along with a General Plan Amendment. These changes ensure compliance with the procedures outlined in Chapter 14 of the city code and were done in conjunction with prior Final Development Plan and Preliminary and Final Plat Approvals associated with the subject Caja del Oro aka Prado two-phase development.* |
| **Staff Response:** Staff's review identifies that approval of Phase 2 "Prodo Subdivision" will not create any nonconformity. |

**V. EARLY NEIGHBORHOOD NOTIFICATION**

An ENN meeting was held on May 11, 2021 and a second ENN was held on August 10, 2021 due to the increase in the number of dwellings from 80 dwellings at the first meeting to 88 dwellings at the second meeting. (See Attachment D for meeting notes.)

Subsequent to the Planning Commission meeting, the applicant reduced the number of units from 88 back to 80 units in response to Planning Commission comments.

**VI. EXPIRATION**

According to SFCC Subsection 14-3.19(B)(3) "Approval of a final plat for a subdivision, including a summary *plat* approved by the *land use director* and *resubdivisions*, shall expire three (3) years after *final action* approving it unless the *plat* is filed for record with the *county* clerk. If the final plat approval expires, then the approval of the corresponding preliminary plat expires simultaneously". Should the Commission approve the final subdivision plat at this hearing, the expiration date would be March 6, 2028.

**VII. ATTACHMENTS:**

ATTACHMENT A: Conditions of Approval and Technical Corrections

ATTACHMENT B: DRT Comments

ATTACHMENT C: Figures and Maps

ATTACHMENT D: ENN Meeting Notes

ATTACHMENT E: Phase- 2 Applicant Submittals

**APPROVED AS TO FORM BY THE PLANNING AND LAND USE DEPARTMENT:**

| Title | Name | Initials |
|---|---|---|
| Department Director | Heather Lamboy | DAE for HLL |
| Assistant Department Director | Maggie Moore | *MM* |
| Interim Planning Manager | Dan Esquibel | DAE |
| Senior Planner | Claudia Kath | *CK* |

City of Santa Fe, New Mexico

# Caja del Oro Phase 2
# Planning Commission

# Attachment A

## Conditions of Approval and Technical Corrections

# Conditions of Approval & Technical Corrections

## Attachment A

| | CONDITIONS OF APPROVAL | Department | To be completed by: |
|---|---|---|---|
| | | | |
| 1 | Shall comply with the most recently adopted International Fire Code (IFC) of the City of Santa Fe Fire Department. | Fire Prevention Bureau | Prior to Building Permit |
| | | | |
| 2 | If new public water infrastructure or fire service will be required to obtain City water service, an approved Water Plan will be required prior to development. | Water Division | Prior to Recordation |
| 3 | If new public water infrastructure or fire service will be required to obtain City water service, an approved Agreement to Construct and Dedicate (ACD) will be required with the Water Division prior to development. | Water Division | Prior to Building Permit Approval |
| 4 | Any re-grading of site over existing water mains shall maintain a minimum of 4 feet of cover and not exceed 5 feet of cover. Depth of existing main to be adjusted to maintain a minimum of 4 feet of cover and not exceed 5 feet of cover if site grading impacts these depth requirements. | Water Division | At the time of Development |
| 5 | Each lot shall be served by separate City water service at the time of development. | Water Division | At the time of Development |
| | | | |
| 6 | Dedication and Affidavit on Sheet G104 not clear and shall be revised for final approval by the Land Use Director | Land Use | Prior to Recordation |
| 7 | Grading Sheet #100 incomplete and out of order in set. Applicant to revise and reorganize set. | Land Use | Prior to Recordation |
| 8 | All Outdoor Lighting to be approved by City Engineer | Land Use | Prior to Construction |

# Conditions of Approval & Technical Corrections

## Attachment A

| | TECHNICAL CORRECTIONS | Department | To be completed by: |
|---|---|---|---|
| 1 | PAR's shall be provided around the development. Accessible path(s) of travel route shall be provided from the Public Right-of-Way and accessible parking aisle(s) to accessible building entrance(s) and shall comply with Section 302, floor surface, 303.4 Ramps, 401 Accessible routes, 403 Walking surfaces, 405 ramps. Ensure accessible route(s) from the Public Right-of-Way and accessible parking space aisle(s) to building entrance(s) are provided and maintained. Provide detectable warning surfaces at curb ramps and transitions to driveway crossings along the accessible paths of travel as applicable. | ADA | Prior to Public Hearing |
| 2 | Accessibility feature design within the Public Right-of-Way shall comply with NMDOT Pedestrian Access Route Details (Serial 608). | ADA | Prior to Public Hearing |
| 3 | Curb Ramps shall have the required 5' clear length landing and turning space. Changes in direction shall comply with 304.3. Curb Ramps within the site shall have a target running slope of 7% or less typical and 1:12 (8.33%) maximum. Curb Ramp landing target slope is 1.5% and shall not exceed 2% running and cross slope maximum in any direction. | ADA | Prior to Public Hearing |
| 4 | Sidewalks and Walkways along the accessible path of travel shall not exceed 1:20 (5%) running slopes without handrail(s) in accordance with current ANSI 117.1 standards 505 & 2015 IBC 1014. Cross slopes shall not exceed 2% and staff recommends 1% to 1.5% as a target cross slope. Walkways provide 5' diameter turning space every 200 linear feet of run. It is preferred to have marked crossings where the accessible route crosses vehicular traffic lanes. | ADA | Prior to Public Hearing |
| 5 | At time of construction, the Contractor shall ensure ADA compliance for construction of ADA accessible features and appurtenances, as detailed in, and in addition to, the approved construction permit documents as required. Improvements shall comply with ICC ANSI A117.1-2009 Chapters 1-5 and Chapter 7, 2015 New Mexico Accessible Parking Checklist, MUTCD, NMDOT Pedestrian Access Standards and PROWAG, NM State Statute and | ADA | Prior to Public Hearing |
| | | | |
| 6 | Clarify if the street trees in front of each lot will be irrigated by the HOA or if each homeowner will be responsible for the watering, maintenance, and care for the street trees. Provide a note in the irrigation notes on Sheet LI-00. Provide a copy of the note given to the property owners explaining the street tree responsibilities. | Landscape | Prior to recordation or construction plan approval |
| 7 | Provide an outdoor lighting plan with photometric data per 14-8.9(C) COSF code. | Landscape | Prior to recordation or construction |

# Conditions of Approval & Technical Corrections

| | | | |
|---|---|---|---|
| | | | plan approval |
| | | | |
| 8 | Remove Pond Access Ramp. The ramp will be used so rarely be vehicles that they can lay down 2x6's and drive over the curb. | Land Use / Terrain Management | Prior to Signature |
| 9 | Top of pond arrow is pointing to the wrong line | Land Use / Terrain Management | Prior to Signature |
| | | | |
| 10 | Developer's most recent submittal contained an outdated TIA and should be replaced with the Final TIA dated 11/29/21 for accuracy for the project record. | Traffic | Prior to Signature |
| 11 | The applicant should be aware that the following code provisions on other requirements will apply to future phases of development of this project:<br>1. City of Santa Fe Building Code, Chapter 23-3.2 states that before commencement of any new construction, it is mandatory for the owner to obtain approval from the Public Works Department for any driveway curb cut or sidewalk crossing. This approval must be issued before a building permit for such new construction is approved.<br>2. Note as the public infrastructure plans move forward to building permit, these may be subject to additional review and possible corrections to meet Public Works Standards for roadways, ADA, signing, striping, lighting, etc, | Traffic | Prior to Building Permit Approval |

City of Santa Fe, New Mexico

# Caja del Oro Phase 2
# Planning Commission
# Attachment B

## Development Review Team
## Technical Corrections

1. **Fire Department**
2. **ADA**
3. **Landscape**
4. **Traffic Engineering**
5. **Water Division**
6. **Archeological Clearance**
7. **Recorded Affordable Housing Agreement**
8. **Santa Fe Public Schools**

# Development Review Team (DRT)
# Comment Form for
# Planning Commission

Date: February 27, 2025

DRT Member: Fire Marshal Geronimo Griego

Dept/Div: Fire Marshal's Office

Case No.: 2022-6012 & 6013 Caja Del Oro Final Dev Plan and Plat

Case Planner: Senior Planner Claudia Kath

---

DRT Review Schedule – 9-12+ weeks*

*Initial DRT Comments* are due to the case planner within three weeks of the *DRT Application Intake* meeting. Initial DRT review should confirm that the application is complete (i.e. Water Budget has been submitted) and/or identify additional submittals or corrections (i.e. Water Budget needs revision). The case planner will review and convey all *Initial DRT Comments* to the applicant via a *Review Memo*. The applicant must respond to all *Initial DRT Comments* and submit a revised application for Final Review. *Final DRT Comments* are due to the case planner within two weeks of receipt of the revised application. The case planner will review and convey all *Final DRT Comments* to the applicant in a *Final Review Memo*. The complete DRT Review Timeline can range from 9-12+ weeks, depending on the complexity and quality of the application and the total number of applications under review.




Timing of Conditions of Approval + Technical Corrections

While all DRT conditions of approval and technical corrections must be met by the applicant, the timing of compliance varies. In the "Must be completed by" column in the following tables, please time your conditions of approval and technical corrections to the following development review stages:

a. *Prior to Public Hearing* – these conditions/technical corrections must be addressed before the case may move forward to the public hearing phase of the Development Review Process.
b. *Prior to Recordation* – these conditions/technical corrections may be resolved after the public hearing but must be addressed before the Development Plan or Subdivision plat is recorded.
c. *Prior Building Permit Approval* – these conditions/technical corrections can be addressed during the building permit review process, but prior to issuance of the permit.
d. *At the time of development* -

Development Review Process Flow Chart

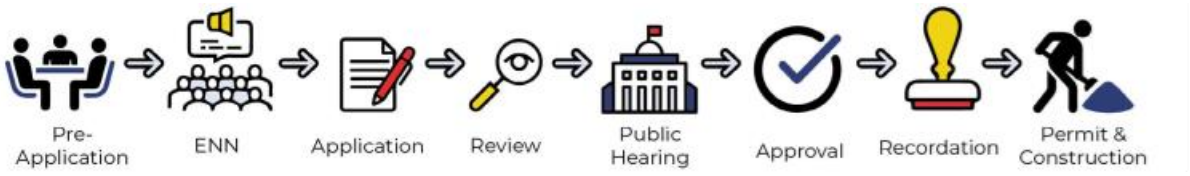


Form Updated: September 2023

*See the *2024 Development Review Schedule* for details

Conditions of Approval and Technical Corrections Tables

Review by this division/department has determined that this application will meet applicable standards if the following Conditions of Approval and Technical Corrections are met:

| **Conditions of Approval:** | **Must be completed by:** | **Applicant response**:** |
|---|---|---|
| | Prior to Building Permit | |
| 1. Shall comply with the most recently adopted International Fire Code (IFC) of the City of Santa Fe Fire Department. | | |
| | | |
| 2. | | |
| 3. | | |
| 4. | | |

| **Technical Corrections:** | **Must be completed by:** | **Applicant Response**:** |
|---|---|---|
| | | |
| 1. | | |
| 2. | | |
| 3. | | |
| 4. | | |
| 5. | | |
| 6. | | |

**The Applicant must respond to the condition of approval or technical correction, indicating they have met the requirement and providing a reference in their revised submittals. If the applicant has not met the requirement, they must indicate as much and provide a response.

The applicant should be aware that the following code provisions or other requirements will apply to future phases of development of this project:

1.

Explanation of Conditions or Corrections (if needed):

(see following pages for notes required)

# Development Review Team (DRT)
# Comment Form

Date: 1/10/2025

DRT Member: Teddy Padilla

Dept/Div: Land Use Dept. Technical review

Case No.: 2022-6012, 6013

Case Planner: Claudia Kath

---

DRT Review Schedule – 9-12+ weeks*

*Initial DRT Comments* are due to the case planner within three weeks of the *DRT Application Intake* meeting. Initial DRT review should confirm that the application is complete (i.e. Water Budget has been submitted) and/or identify additional submittals or corrections (i.e. Water Budget needs revision). The case planner will review and convey all *Initial DRT Comments* to the applicant via a *Review Memo*. The applicant must respond to all *Initial DRT Comments* and submit a revised application for Final Review. *Final DRT Comments* are due to the case planner within two weeks of receipt of the revised application. The case planner will review and convey all *Final DRT Comments* to the applicant in a *Final Review Memo*. The complete DRT Review Timeline can range from 9-12+ weeks, depending on the complexity and quality of the application and the total number of applications under review.




Timing of Conditions of Approval + Technical Corrections

While all DRT conditions of approval and technical corrections must be met by the applicant, the timing of compliance varies. In the "Must be completed by" column in the following tables, please time your conditions of approval and technical corrections to the following development review stages:

a. *Prior to Public Hearing* – these conditions/technical corrections must be addressed before the case may move forward to the public hearing phase of the Development Review Process.
b. *Prior to Recordation* – these conditions/technical corrections may be resolved after the public hearing but must be addressed before the Development Plan or Subdivision plat is recorded.
c. *Prior Building Permit Approval* – these conditions/technical corrections can be addressed during the building permit review process, but prior to issuance of the permit.
d. *At the time of Construction* – these conditions/technical corrections can be addressed during the construction and inspection processes.

Form Updated: March 2024

Development Review Process Flow Chart




*See the *2024 Development Review Schedule* for details

Conditions of Approval and Technical Corrections Tables

Review by this division/department has determined that this application will meet applicable standards if the following Conditions of Approval and Technical Corrections are met:

| **Conditions of Approval:** | **Must be completed by:** | **Applicant Response**:** |
|---|---|---|
| 1. | | |
| 2. | | |
| 3. | | |
| 4. | | |
| 5. | | |
| 6. | | |

| **Technical Corrections:** | **Must be completed by:** | **Applicant Response**:** |
|---|---|---|
| 1. PAR's shall be provided around the development. Accessible path(s) of travel route shall be provided from the Public Right-of-Way and accessible parking aisle(s) to accessible building entrance(s) and shall comply with Section 302, floor surface, 303.4 Ramps, 401 Accessible routes, 403 Walking surfaces, 405 ramps. Ensure accessible route(s) from the Public Right-of-Way and accessible parking space aisle(s) to building entrance(s) are provided and maintained. Provide detectable warning surfaces at curb ramps and transitions to driveway crossings along the accessible paths of travel as applicable.<br>2. Accessibility feature design within the Public Right-of-Way shall comply with NMDOT Pedestrian Access Route Details (Serial 608).<br>3. Curb Ramps shall have the required 5' clear length landing and turning space. Changes in direction shall comply with 304.3. Curb Ramps within the site shall have a target running slope of 7% or less typical and 1:12 (8.33%) maximum. Curb Ramp landing target slope is 1.5% and shall not exceed 2% running and cross slope maximum in any direction. | | |

Form Updated: March 2024

| | | |
|---|---|---|
| 4. Sidewalks and Walkways along the accessible path of travel shall not exceed 1:20 (5%) running slopes without handrail(s) in accordance with current ANSI 117.1 standards 505 & 2015 IBC 1014. Cross slopes shall not exceed 2% and staff recommends 1% to 1.5% as a target cross slope. Walkways provide 5' diameter turning space every 200 linear feet of run. It is preferred to have marked crossings where the accessible route crosses vehicular traffic lanes.<br>5. At time of construction, the Contractor shall ensure ADA compliance for construction of ADA accessible features and appurtenances, as detailed in, and in addition to, the approved construction permit documents as required. Improvements shall comply with ICC ANSI A117.1-2009 Chapters 1-5 and Chapter 7, 2015 New Mexico Accessible Parking Checklist, MUTCD, NMDOT Pedestrian Access Standards and PROWAG, NM State Statute and Administrative Code and DOJ regulations as applicable. | | |
| | | |
| | | |
| | | |

***The Applicant must respond to the condition of approval or technical correction, indicating they have met the requirement and providing a reference in their revised submittals. If the applicant has not met the requirement, they must indicate as much and provide a response.*

The applicant should be aware that the following code provisions or other requirements will apply to future phases of development of this project:

1. [list any additional items]
2.

Explanation of Conditions or Corrections (if needed):

(see following pages for notes required)

# Development Review Team

## Comment Form

Date: 1/08/25

Staff person: Lawrence Rivera

Dept/Div: Land Use/Terrain Management – Landscape/Irrigation and Outdoor Lighting Review

Case: #s 2022-6012 & 2022-6013. Caja Del Oro Final Subdivision and Development Plan.

Case Manager: KATH, CLAUDIA M. <cmkath@santafenm.gov>

---

The subject final subdivision and final Development Plan was approved by the Planning Commission on December 2, 2022 (Case #s 2021-4379 & 2021-4381). Caja del Oro Subdivision Final Development Plan & Plat Response to Review Comment Responses.

| Conditions of Approval: | Must be completed by: |
|---|---|
| | |
| | |
| | |

| Technical Corrections*: | Must be completed by: |
|---|---|
| 1.Clarify if the street trees in front of each lot will be irrigated by the HOA or if each homeowner will be responsible for the watering, maintenance, and care for the street trees. Provide a note in the irrigation notes on Sheet LI-00. Provide a copy of the note given to the property owners explaining the street tree responsibilities. | Prior to recordation or construction plan approval |
| 2. Provide an outdoor lighting plan with photometric data per 14-8.9(C) COSF code. | Prior to recordation or construction plan approval |
| Staff reserves the right to require additional submittals upon receiving revisions. | |
| | |

*Must made prior to recording and/or permit issuance

The applicant should be aware that the following code provisions or other requirements will apply to future phases of development of this project:

1. [list any additional items]

Explanation of Conditions or Corrections (if needed):

# Development Review Team (DRT)
# Comment Form

Date: December 23, 2024

DRT Member: Leroy Pacheco, PE and Phil Gallegos, PE (Wilson&Company)

Dept/Div: Public Works Department – Traffic Engineering

Case No.: #2022-6012 Caja del Oro Subdivision Final Development and Final Subdivision Plat Phase 2

Case Planner: Claudia Kath, AICP Senior Planner

---

Conditions of Approval and Technical Corrections Tables

Review by this division/department has determined that this application will meet applicable standards if the following Conditions of Approval and Technical Corrections are met:

| Conditions of Approval: | Must be completed by: | Applicant response: |
|---|---|---|
| 1. | | |
| 2. | | |
| 3. | | |
| 4. | | |
| 5. | | |
| 6. | | |

| Technical Corrections: | Must be completed by: | Applicant Response: |
|---|---|---|
| 1. See attached email to Dan Esquibel dated 2/17/22. Developer's most recent submittal contained an outdated TIA and should be replaced with the Final TIA dated 11/29/21 for accuracy of the project record. | | |
| 2. | | |
| 3. | | |
| 4. | | |

The applicant should be aware that the following code provisions or other requirements will apply to future phases of development of this project:

1. City of Santa Fe Building Code, Chapter 23-3.2 states that before commencement of any new construction, it is mandatory for the owner to obtain approval from the Public Works Department for any driveway curb cut or sidewalk crossing. This approval must be issued before a building permit for such new construction is approved.
2. Note as the public infrastructure plans move forward to building permit, these may be subject to additional reviews and possible corrections to meet Public Works Standards for roadways, ADA, signing, striping, lighting, etc. prior to building permit approval.

Explanation of Conditions or Corrections (if needed):

(see following pages for notes required)

# Caja del Oro Subdivision Case# 2021-4377; 4378; 4379; and 4381

From engineer@leroypacheco.com <Engineer@leroypacheco.com>

To ESQUIBEL, DANIEL A.<daesquibel@santafenm.gov>

CC Audra Gallegos (audra.gallegos@wilsonco.com)<audra.gallegos@wilsonco.com>, Bert Thomas (bthomas@bhinc.com)<bthomas@bhinc.com>, Jim Siebert<jim@jwsiebert.com>, Victoria Dalton<victoria@jwsiebert.com>, WHEELER, REGINA A.<rawheeler@santafenm.gov>, KLUCK, JASON M.<jmkluck@santafenm.gov>, Juarez-Infante, Mario G.<mario.juarez@wilsonco.com>

Date Thursday, February 17th, 2022 at 9:08 AM

Dan

I've recently discussed the developer's Traffic Impact Analysis (TIA) with its engineer and with the City's traffic engineering consultant (Wilson & Company). The developer's engineer has addressed Wilson's comments that were included in the packet material, and the conclusions of the report are supported by its analysis. There are no traffic engineering impediments related to TIA for the proposed development.

Thank you,
**Leroy Nicholas Pacheco, PE**
Email: engineer@leroypacheco.com
Phone: 505-218-6853
Sent with ProtonMail Secure Email.

**9.00 MB** 1 file attached

Pulte South Meadows_TIA_v4.pdf 9.00 MB

# PULTE CAJA DEL ORO DELOPMENT

# TRAFFIC IMPACT ANALYSIS

## FINAL SUBMITTAL

## NOVEMBER 29, 2021




**Prepared For:**

**Pulte Homes**

**7601 Jefferson St NE, Suite 320**

**Albuquerque, NM 87109**

**Prepared By:**

Bohannan Huston

Engineering

Spatial Data

Advanced Technologies

# PULTE CAJA DEL ORO DEVELOPMENT TIA

FINAL SUBMITTAL

Date:

**November 29, 2021**

Prepared by:

**Bohannan Huston, Inc.**
7500 Jefferson St NE
Courtyard Two
Albuquerque, NM 87109

Prepared for:

**Pulte Homes**
7601 Jefferson St NE, Suite 320
Albuquerque, NM 87109

Prepared By:

Eric J Wrage 11/29/2021

**Eric J. Wrage, RSP1, PE, PTOE** **Date**

| | |
|---|---|
| PROJECT: | PULTE CAJA DEL ORO TIA |
| PROJECT NO.: | 20220085 |
| MILESTONE: | MPO TIA REVIEW |
| BHI PROJECT MANAGER: | ERIC WRAGE |
| DATE: | 11/30/2021 |

| *Dispositions* |
|---|
| A - Accept Comments |
| B - Traffic Analyst to Evaluate |
| C -Disregard Comment |
| OC - Other Changes |

| Comment No. | Sheet No. | Comment | Response | Disposition | Response By | Date | Verified |
|---|---|---|---|---|---|---|---|
| **City of Santa Fe Traffic Engineer (November 8, 2021) Comments** | | | | | | | |
| 1 | | The Pulte Home development is 16.21 acres according to the site plan. The TIA shows 14.66 acres on pages 1and 5. | BH to update | A | BH | 11/19/2021 | |
| 2 | | The data for the south Meadows Roundabout 2021 Existing Unsignalized Intersection Results and the 2024 No Build Unsignalized Intersection Results were not submitted | BH will add statement that these results came from the Aleksander Estates TIA and add the sheets from that report to Appendix B with our results | A | BH | 11/19/2021 | |
| 3 | | In the reported HCS7 data, the queue lengths are defined by vehicles, not feet. Based on 25-feet per vehicle, the following will need to be updated.<br>a. Table 2, Alameda Frtg. & Caja del Oro WB Left and Right, AM and PM should be 75 feet.<br>b.Table 6, Alameda Frtg. & Caja del Oro WB Left and Right, AM should be 100 feet and PM should be 125 feet.<br>c.Table 7, Alameda Frtg. & Caja del Oro WB Left and Right, AM should be 125 and PM should be 175. | BH to update | A | BH | 11/19/2021 | |
| 4 | | The following data on Figure 3 will need to be updated to match the data in the appendix<br>a.Leg 1 to Leg 3 PM volume should be 160.<br>b.Leg 2 to Leg 1 PM should be 137.<br>c.Leg 2 to Leg 4 PM should be 125. | BH to update | A | BH | 11/19/2021 | |
| 5 | | The following data in Table 6 will need to be updated to match the data in the appendix.<br>a.599 Overpass PM Queue should be 100, based on 25 feet per car.<br>b.Alameda Frtg. & Caja del Oro, Westbound Left & Right PM delay should be 36.3 and the V/C should be 0.65. The LOS should be E based on the printed report. The AM delay should be 23 and the V/C should be 0.58.<br>c.Caja del Oro & Site Entrance north bound left should be 14.0 and the northbound right should be 10.9 | BH to update | A | BH | 11/19/2021 | |
| 6 | | On page 19, the paragraph about the westbound left and right approaches at Alameda Frontage and Caja del Oro Grant Road Intersection will need to be updated. The data shows that the PM peak hour will operate at LOS E | BH to update | A | BH | 11/19/2021 | |
| 7 | | On Figure 8, the NM 599 Ramp to Leg 1 AM volume should be 89 to match the data in the appendix | BH to update | A | BH | 11/19/2021 | |
| 8 | | Appendix B title references 2020, while the report references 2021 for existing conditions. | BH to update | A | BH | 11/19/2021 | |
| 9 | | Appendix D and E title imply there is only 2024 data. I recommend either updating the title to reflect the inclusion of the 2034 data or breaking the 2024 and 2034 into separate appendixes. | BH to update | A | BH | 11/19/2021 | |

# Development Review Team (DRT)
# Comment Form

Date: February 27, 2025

DRT Member: Clinton Peterson

Dept/Div: Public Utilities/Water Division

Case No.: Case 2022-6012 and 6013: Caja del Oro Subdivision Final Development Phase 2

Case Planner: Claudia Kath

---

DRT Review Schedule – 9-12+ weeks*

*Initial DRT Comments* are due to the case planner within three weeks of the *DRT Application Intake* meeting. Initial DRT review should confirm that the application is complete (i.e. Water Budget has been submitted) and/or identify additional submittals or corrections (i.e. Water Budget needs revision). The case planner will review and convey all *Initial DRT Comments* to the applicant via a *Review Memo*. The applicant must respond to all *Initial DRT Comments* and submit a revised application for Final Review. *Final DRT Comments* are due to the case planner within two weeks of receipt of the revised application. The case planner will review and convey all *Final DRT Comments* to the applicant in a *Final Review Memo*. The complete DRT Review Timeline can range from 9-12+ weeks, depending on the complexity and quality of the application and the total number of applications under review.

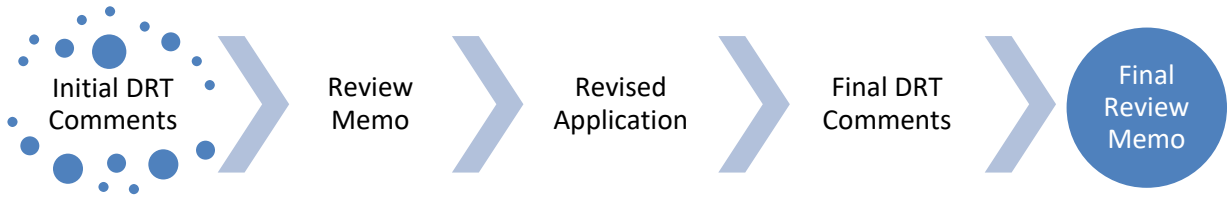


Timing of Conditions of Approval + Technical Corrections

While all DRT conditions of approval and technical corrections must be met by the applicant, the timing of compliance varies. In the "Must be completed by" column in the following tables, please time your conditions of approval and technical corrections to the following development review stages:

a. *Prior to Public Hearing* – these conditions/technical corrections must be addressed before the case may move forward to the public hearing phase of the Development Review Process.
b. *Prior to Recordation* – these conditions/technical corrections may be resolved after the public hearing but must be addressed before the Development Plan or Subdivision plat is recorded.
c. *Prior Building Permit Approval* – these conditions/technical corrections can be addressed during the building permit review process, but prior to issuance of the permit.
d. *At the time of development* -

Development Review Process Flow Chart




Form Updated: September 2023

*See the *2024 Development Review Schedule* for details

Conditions of Approval and Technical Corrections Tables

Review by this division/department has determined that this application will meet applicable standards if the following Conditions of Approval and Technical Corrections are met:

| **Conditions of Approval:** | **Must be completed by:** | **Applicant response:** |
|---|---|---|
| 1. If new public water infrastructure or fire service will be required to obtain City water service, an approved Water Plan will be required prior to development. | Prior to Recordation | |
| 2. If new public water infrastructure or fire service will be required to obtain City water service, an approved Agreement to Construct and Dedicate (ACD) will be required with the Water Division prior to development. | Prior to Building Permit Approval | |
| 3. Any re-grading of site over existing water mains shall maintain a minimum of 4 feet of cover and not exceed 5 feet of cover. Depth of existing main to be adjusted to maintain a minimum of 4 feet of cover and not exceed 5 feet of cover if site grading impacts these depth requirements. | At the time of development | |
| 4. Each lot shall be served by separate City water service at the time of development. | At the time of development | |

| **Technical Corrections:** | **Must be completed by:** | **Applicant Response:** |
|---|---|---|
| 1. | | |

The applicant should be aware that the following code provisions or other requirements will apply to future phases of development of this project:

1. [list any additional items]
2.

Explanation of Conditions or Corrections (if needed):

(see following pages for notes required)

Form Updated: September 2023

# City of Santa Fe, New Mexico

200 Lincoln Avenue, P.O. Box 909, Santa Fe, N.M. 87504-0909
www.santafenm.gov

*Alan Webber, Mayor*

Councilors:
Signe I. Lindell, Mayor Pro Tem, District 1
Renee Villarreal, District 1
Michael J. Garcia, District 2
Carol Romero-Wirth, District 2
Roman "Tiger" Abeyta, District 3
Chris Rivera, District 3
Jamie Cassutt-Sanchez, District 4
JoAnne Vigil Coppler, District 4


August 12, 2021

Ron Winters
109 Calle Paula
Santa Fe, New Mexico 87505

**NOTICE OF ARC ACTION**

**Project Location:** South Meadows Road and NM 599
**ARC Case Number:** 2021-003867-ARC

Dear Mr. Winters

At their hearing on August 5, 2021, the City of Santa Fe Archaeological Review Committee (ARC) voted unanimously to approve the archaeological survey and inventory report as submitted with minor corrections. If you have questions or concerns, please do not hesitate to contact Nicole Ramirez Thomas at 530-680-1841 or via email at nicole@wonderstoneconsulting.com .

Sincerely,

Nicole A. Ramirez Thomas
Interim Historic Preservation Division Manager
Land Use Department, City of Santa Fe

ITEM # 24-0499

**CITY OF SANTA FE**
**SANTA FE HOMES PROGRAM AGREEMENT**
**for 80 SFHP Home(s) to be located at**
**" *Caja del Oro*", ~~*4601 Rail Runner Road*~~, Santa Fe, New Mexico**

This Santa Fe Homes Program Agreement ("Agreement") is entered into on this 13th day of August, 2024 by and between ***Pulte Homes of NM*** (the "SFHP Developer/Successor in Interest"), a New Mexico limited liability company, and the City of Santa Fe, New Mexico, a municipal corporation, (the "City").

**WHEREAS**, the City has duly adopted the Santa Fe Homes Program and Administrative Procedures (collectively "SFHP") and other regulatory structures in order to ensure that private development bears its fair share of the burden of housing affordability in the Santa Fe community; and

**WHEREAS,** the City's Office of Affordable Housing has determined that upon individualized assessment, the Agreement will provide, at a minimum, the amount of affordable housing necessary to offset impacts on the affordable housing market in the region of the project; and

**WHEREAS**, the City and the SFHP Developer/Successor in Interest have entered into a SFHP proposal ("Proposal") in accordance with the requirements of the SFHP. The Proposal is attached hereto and incorporated herein by reference; and

**WHEREAS**, the City and SFHP Developer/Successor in Interest now wish to satisfy the SFHP requirement for a final agreement in order to ensure SFHP compliance and a mechanism for ensuring long-term affordability.

**NOW THEREFORE**, the City and the SFHP Developer/Successor in Interest for themselves and their heirs, successors and assigns (including, without limitation, all persons who subsequently own a SFHP Home or any interest therein, or the Property or any portion thereof containing a SFHP Home, while this Agreement is in effect) hereby agree that the SFHP Home shall be subject to the following Agreements and restrictions for the benefit of the City.

1. **Definitions.** All terms capitalized herein shall have the meanings given to them in this Agreement or the meanings as defined in the Santa Fe City Code sections regarding the SFHP. In this Agreement the following words and phrases have the following meaning:

A. "Agreement" means this SFHP Agreement.

B. "Certificate of SFHP Homebuyer Eligibility" means a certificate issued by the City or the City's assignee or agent, which certifies that the buyer is a qualified buyer who is income eligible.

C. "Certified Homebuyer" means a person determined, pursuant to the SFHP and such other criteria as the City or its agents may deem appropriate, to be qualified on the basis of need and preference for the purchase of a SFHP Home and who has properly obtained a "Certificate of SFHP Homebuyer Eligibility".

D. "Fair Market Value", unless otherwise stated, means fair market value as of the day of the event in question (for example, purchase of the SFHP Home or termination of this Agreement), taking into account the restrictions on SFHP Developer/Successor in Interest and occupancy imposed by this Agreement as if such restrictions were perpetual.

SFC CLERK RECORDED 08/19/2024

E. "SFHP Developer/Successor in Interest" means each legal and equitable SFHP Developer and/or Successor in interest to the original SFHP Developer of all or any portion of a SFHP Home on the Property during the term of this Agreement, including without limitation the SFHP Developer/Successor in Interest identified above, and any subsequent SFHP Developer/Successor in Interest and/or any other Successor in Interest by sale, conveyance or other transfer of any legal or beneficial interest in a SFHP Home or the Property, as set forth in Section 2.1 herein. Unless the context otherwise requires, SFHP Developer/Successor in Interest shall mean the SFHP Developer/Successor in Interest at the time in question. SFHP Developer/Successor in Interest and SFHP Developer/Successor in Interests and Successor in Interest are used interchangeably.

F. "SFHP Home" shall mean the units of housing to be constructed, marketed and/or sold by SFHP Developer/Successor in Interest at the affordable price pursuant to the SFHP and this Agreement.

G. "SFHP Lot" means housing lot(s) housings to be constructed, developed, marketed and/or sold by SFHP Developer/Successor in Interest as affordable housing.

H. "SFHP Homebuyer" shall mean any person or entity, which purchases the SFHP Home and/or SFHP Lot from the SFHP Developer/Successor in Interest and any subsequent purchasers who buy from the initial purchaser during the term of this Agreement.

I. "Repurchaser" means the City or the City's Assignee. A general delegation of authority by the City to another person as Repurchaser shall transfer those rights, powers and obligations assigned to the Repurchaser in this Agreement or the Lien. Transfer of any rights, powers and obligations assigned to the City in this Agreement shall be effective only to the extent such rights, powers and obligations are specifically enumerated in the delegation of authority.

J. "Senior Lien" means a mortgage with respect to the Property from the Purchaser, as mortgagor, to any lender or its agent or assigns, as mortgagee which loan is solely used to purchase the SFHP Home.

## 2. THE PROJECT.

2.1 Property. The SFHP Developer/Successor in Interest is or will become the owner of certain property situated in the County of Santa Fe, New Mexico, located at ***4601 Rail Runner Road*** and known as ***"Caja del Oro"*** which property contains more or less **16.21** acres and is more particularly described in Exhibit A attached hereto (The "Property").

2.2. Intended Conveyance of Interest. The Property is to be developed and the units thereon marketed as for sale housing.

2.3 SFHP Plan. The SFHP Developer/Successor in Interest agrees to construct a total of **80 SFHP Homes** as indicated on the attached Exhibit B (SFHP Plan). The SFHP Plan shall include the number of bedrooms and bathrooms, the minimum square footage and the minimum household size, the income range to be served and the current SFHP Home price for each SFHP Home as set forth in Section 8.2 of the SFHP Administrative Procedures. If the development is constructed in phases, a SFHP Plan for each phase shall be reviewed and approved by the City and recorded at the County Clerk's office prior to issuance of a building permit by the City for that phase.

SFC CLERK RECORDED 09/19/2024

2.4 Agreement to Sell at SFHP Home Price. The SFHP Developer/Successor in Interest agrees to sell the SFHP Homes at the current SFHP Home Price or such SFHP Home Price as may be current at the time of sale by the SFHP Developer/Successor in Interest.

A. The affordable home price and shall be reduced in order to limit the impact on SFHP home buyers of fees assessed by condominium, common area, or homeowner associations. The affordable home price shall be reduced so that the buyer's mortgage or manufactured home loan principal amount and, accordingly, the buyer's monthly mortgage payments, are reduced by an amount equal to the assessed fee in excess of seventy-five dollars ($75.00).Additionally, the SFHP Developer/Successor in Interest agrees that the association's bylaws will identify limits to annual fee increases for the owners of affordable units so that increases do not exceed 5% annually or 10% over any three-year time frame.

B. The affordable home price may be increased at the request of the SFHP home buyer by the price of allowable option upgrades, not to exceed the maximum option upgrade allowance, as established pursuant to administrative procedures.

C. The affordable home price may be increased by the amount of the approved energy efficiency adjustment pursuant to administrative procedures.

2.5 Agreement for Payments for Fraction Portions of a SFHP Home. SFHP Developer/Successor in Interest **does not owe** any fractional portion of a SFHP Home as calculated pursuant to SFHP to the City or its agent prior to recording this Agreement.

2.6 Marketing Sequence. The SFHP Homes shall be marketed at the same time as all other units on the Property or at a time, and in a proportion, equal to the number of non-SFHP Homes being marketed for sale during a given phase of development.

2.7 Development Incentives. The City agrees to the following incentives: Development review and building permit fees shall be waived or reduced proportionately to the number of SFHP Homes and capital impact fees and utility expansion charges shall be waived or reduced as set forth in section 13.1 of the Administrative Procedures. SFHP Developer/Successor in Interest also requests a 15% density bonus as set forth in section 13.2 of the Administrative Procedures.

2.8 Agreements Regarding Transfers of Non-SFHP Homes on the Property. SFHP Developer/Successor in Interest acknowledges and hereby agrees that compliance with this Agreement shall be a precondition for any releases or express termination of SFHP Developer/Successor in Interest's SFHP Agreements and all future City approvals of building permits, certificates of occupancy and utility connections, and such other development approvals regarding the Property as may be required by law for development, construction, occupation and use of the Property.

## 3. SFHP LIEN.

3.1 Creation of SFHP Lien. The SFHP Developer/Successor in Interest/Successor in Interest hereby creates a lien upon each SFHP Home for the benefit of the City, its agents, heirs, successors and assigns (the "Lien"). The Lien shall be for the sole purpose of complying with the SFHP and this Agreement and for the purpose of retaining long-term affordability of SFHP Homes.

3.2 Subordination. The Lien shall be subject and subordinate in all respects to liens, terms, covenants and conditions of a Senior Lien including all sums advanced for the purpose of (a) protecting or further securing the lien of the Senior Lien, curing defaults by the SFHP Homebuyer, its successors and assigns under the Senior Lien or for any other purpose expressly permitted by the Senior Lien or (b) constructing, renovating, repairing, furnishing, fixturing or equipping the Property. The terms and provisions of the Senior Lien are paramount and controlling, and they supersede any other terms and provisions hereof in conflict therewith. In the event of a foreclosure or deed in lieu of foreclosure of the

SFC CLERK RECORDED 09/19/2024

Senior Lien, any provisions wherein or in any other collateral agreement restricting the use of the Property to income eligible households or otherwise restricting the SFHP Homebuyer, its successor's or assign's ability to sell the Property, shall have no effect on subsequent purchasers of the Property. Any purchaser following foreclosure, including his successors or assigns (other than the SFHP Homebuyer or a related entity of the SFHP Homebuyer), receiving title to the Property through a foreclosure or deed in lieu of foreclosure of the Senior Lien shall receive the title to the Property free and clear from such restrictions.

Further, if the holder of the Senior Lien acquires title to the Property pursuant to a deed in lieu of foreclosure, this Lien shall automatically terminate upon acquisition of the title by the holder of the Senior Lien, provided that (a) the City has been given written notice of default under the Senior Lien and (b) the City shall not have cured the default under the Senior Lien, or diligently pursued curing the default as determined by the holder of the Senior Lien, within the 60-day period provided in such notice sent to the City.

In no event shall the SFHP Developer/Successor in Interest or any of its officers, principals, or representatives, or employees, or affiliated entities, contract to purchase, purchase, accept or otherwise have transferred to it an SFHP Homebuyer's or Repurchaser's statutory right of redemption of the SFHP Home or SFHP Lot, and in no event shall the aforementioned persons exercise any right of redemption or foreclosure for that SFHP Home or SFHP Lot.

The Lien and/or deed restriction must be shown on Schedule B-II of the lender's title policy as a subordinate item(s) to the first mortgage that is to be sold to Fannie Mae.

Notwithstanding any terms to the contrary, herein, the City and its agent's rights to collect and apply the insurance proceeds of hazard or property insurance or other insurance proceeds shall be subject and subordinate to the rights of the Senior Lien holder to collect and apply such proceeds in accordance with the Senior Lien. Likewise, the proceeds of any award or claim for damages, direct or consequential, in connection with any condemnation or other taking of any part of the property subject to the Lien, or for conveyance in lieu of condemnation, are hereby assigned and shall be paid to the Senior Lien holder, subject to the terms of the Senior Lien.

3.3 Lien Amount. The Lien amount shall be the difference between the current SFHP Home price at the time of closing and 95% of the Fair Market Value as determined by a certified appraiser. The Lien amount shall be calculated after construction of the SFHP Home but prior to purchase by the SFHP Homebuyer. SFHP Developer/Successor in Interest agrees to execute such additional documents as are necessary to record the SFHP Lien with the Lien amount.

3.4 Term of Lien. The Lien shall run from the date of purchase of the SFHP Home by the SFHP Homebuyer or SFHP Developer/Successor in Interest until such time as the City exercises its right of first refusal or purchase under this Agreement. During this term, so long as the SFHP Homebuyer or SFHP Developer/Successor in Interest complies with SFHP and the terms of this Agreement, no payments will be due on this Lien.

3.5 Transfers of Lien. The Lien may be assumed by subsequent SFHP Homebuyers of the SFHP Home, including those acquiring the SFHP Home through testate or intestate succession so long as a Notice of Intent to Sell is received by the City and the City gives written approval of the assumption of the Lien. The Lien shall not be assigned by the City or its agent without the Senior Lien holder's prior written consent so long as the Senior Lien remains outstanding and the obligation to make payment on the mortgage note has not been satisfied. Subsequent SFHP Homebuyers or SFHP Developer/Successor in Interest shall also obtain a "Certificate of SFHP Homebuyer Eligibility".

2252/11/88 09:19 CLERK RECORDED

3.6 Collection of the Lien Amount. The City and its agent agree that they will not commence foreclosure proceedings or accept a deed in lieu of foreclosure, or exercise any other rights or remedies hereunder until it has given the Senior Lien holder at least 60 days prior written notice. The subordinate lien holder (the City or its agent) will give the Senior Lien holder written notice of default and prior written notice of any acceleration under the subordinate mortgage (the Lien). However, it is understood that the subordinate lien holder is only holding the Lien for purposes of retaining long-term affordability and, therefore, will not accelerate the payment of the Lien amount.

In the event of a foreclosure on the Senior Lien the City hereby agrees to accept a note for any deficiency in the Lien amount and to forgive, release and forgo collection upon the Lien.

**4. CLOSING SALES AND CONVEYANCES OF THE SFHP HOMES.**

4.1 Certification of Homebuyer. SFHP Developer/Successor in Interest agrees to sell the SFHP Homes only to Certified Homebuyers who qualify for the purchase of a SFHP Home under the SFHP. The City hereby represents and warrants that Santa Fe Community Housing Trust or Homewise are its authorized agents under the most current agreements between the City and Santa Fe Community Housing Trust or Homewise, for the purpose of qualifying buyers under this Agreement and issuing Certificates of SFHP Homebuyer Eligibility.

4.2 SFHP Developer/Successor in Interest's or SFHP Homebuyer's Notice of Intent to Sell or Transfer the Property. Any time the SFHP Developer/Successor in Interest or any subsequent SFHP Homebuyer who is subject to this Lien intends to sell or otherwise transfer the Property or any interest in the SFHP Home, whether by deed, real estate contract, intestacy, testate succession or otherwise, said transferor shall give written notice to the City which shall state the transferor's intention to sell or otherwise transfer said Property or interest in the SFHP Home. (The "Notice of Intent to Sell").

4.3 Notice to Prospective SFHP Homebuyer of Lien.The SFHP Developer/Successor in Interest agrees to provide actual notice to any prospective purchaser of the covenants, conditions, and encumbrances, which are or will be placed upon the SFHP Homes to be sold by SFHP Developer/Successor in Interest to the Certified SFHP Homebuyer. Any purchase agreement containing the foregoing language or accompanied by a signed disclosure statement containing the foregoing language shall be deemed acceptable to the City pursuant to Section 26-1.18 SFCC 1987. The notice shall, at a minimum, state:

A. The SFHP Home and/or SFHP Lot is subject to a Lien which is intended to retain the long-term affordability of the SFHP Home.

B. The Lien may limit the ability of the SFHP Homebuyer to get subsequent mortgage or equity loans.

C. The Lien gives the City and its agents a right to exercise its right of first refusal and repurchase of the SFHP Home and/or SFHP Lot at the fair market value less the amount of the lien.

D. The Right of First Refusal granted to the City can be assigned by the City to an agent or third party Certified SFHP Homebuyer.

E. The Lien will limit the SFHP Homebuyer's ability to sell the SFHP Home in the future and shall require the City or its agents to agree to any additional use of the SFHP Home as collateral or security.

SFC CLERK RECORDED 02/19/2024

F. The Lien will reduce the total amount payable to the SFHP Homebuyer upon resale by the Lien amount if the SFHP Home is sold or transferred during the Lien term.

4.4 Escrow Instructions Regarding Initial SFHP Compliance. SFHP Developer/Successor in Interest agrees to sell the SFHP Homes through an escrow agent. The escrow agent shall be required by SFHP Developer/Successor in Interest as a precondition for closing to certify to the City that:

A. The SFHP Homebuyer has been notified of and has indicated their understanding of the Lien and its affect.

B. The total sales price at closing does not exceed the SFHP Home Price plus such transactional costs of closing as are usual and customary.

C. The SFHP Home is being sold to a buyer who has agreed that the SFHP Home shall be their principal residence and who has provided the escrow agent with a Certificate of SFHP Homebuyer Eligibility.

4.5 SFHP Developer/Successor in Interest to Reference Agreement and Lien. The SFHP Developer/Successor in Interest shall include a reference to this Agreement in any and all deeds or other instruments conveying any interest in the SFHP Home and/or SFHP Lot or any part thereof or interest therein, although neither the validity nor enforceability of this Agreement shall be affected in any manner by failure to do so.

## 5. RIGHT OF FIRST REFUSAL OR PURCHASE.

5.1 Grant of Right of First Refusal. To maintain the SFHP Home as affordable the City and its agents shall have, and SFHP Developer/Successor in Interest, its heirs, successors and assigns, hereby grant the City and its agent the right (but without obligation) to purchase the SFHP Home and SFHP Lot in any of the following circumstances (the "Rights of First Refusal"):

A. The SFHP Developer/Successor in Interest has given the City Notice of Intent to Sell; or

B. The SFHP Home is no longer the principal residence of any person purchasing the SFHP Home from the SFHP Developer/Successor in Interest or any subsequent SFHP Homebuyer, their heirs, successors or assigns whose occupancy does not comply with the covenant to maintain the SFHP Home only as a principle residence and not as a trade or business, as an investment property, (income/rental property) or as a recreational second home, or non-principal residence so long as said SFHP Homebuyer of the SFHP Home has been given written notice identifying the violations and has failed to cure them; or

C. Any legal or beneficial interest in the SFHP Home and/or SFHP Lot is conveyed or otherwise transferred (for example, by inheritance) without both Notice of Intent to Sell and Second Notice of Intent to Sell as required in this Section having been given, unless the City has waived the Right of First Refusal in writing; or

D. The City has notice of a pending mortgage or other lien foreclosure or similar proceeding (for instance, a sheriff's sale) against the SFHP Home and/or SFHP Lot or of a civil action or equivalent proceeding for unpaid condominium common expenses; or



SEC CLERK RECORDED 02/15/2024

E. The City has notice that the SFHP Home and/or SFHP Lot is being taken for unpaid taxes; or

F. The SFHP Homebuyer made material misrepresentations in applying to acquire the SFHP Home and/or SFHP Lot; or

G. The SFHP Homebuyer has failed to observe and perform the SFHP Homebuyer's obligations under this Agreement (other than as stated in (H.) below), has been given written notice identifying the violations and has failed to cure them; or

H. The SFHP Homebuyer has failed to observe and perform the SFHP Homebuyer's obligations under this Covenant in a manner, which constitutes criminal conduct, or in the City's judgment constitutes other willful, egregious and continuing violation of such obligations.

The City shall be obligated to give notice and an opportunity to cure only for events under subsections (B.) or (G.); and for those events, the SFHP Homebuyer and any holder of a Senior Lien shall have a reasonable time to cure which shall not exceed six months. In all cases other than sale or other transfer of the SFHP Home under subsection (A.), the City's right to buy the SFHP Home shall continue only while the event giving rise to exercise of the Right of First Refusal continues un-remedied.

5.2 City's Exercise of Right of First Refusal. In the event that the City has received a Notice of Intent to Sell pursuant to this Agreement, the City shall have 30 days in which to exercise its Right of First Refusal. During this 30-day period, the City and its agent shall have the exclusive right to market the SFHP Home and the SFHP Homebuyer shall not list the SFHP Home with a realtor or any other selling agent.

5.3 Duration of Right of First Refusal. The City and the SFHP Homebuyer intend that the Right of First Refusal are for the purpose of promoting and enforcing this Agreement in its goal of ensuring continuance of the SFHP Home as affordable housing as permitted under New Mexico law and accordingly are intended to be exercisable throughout the term of this Agreement (or such shorter period as is the longest permitted under law).

5.4 Purchase Price. The purchase price of the SFHP Home and/or SFHP Lot under the Right of First Refusal shall be equal to the appraised price at the time of sale less the Lien amount. In the event that there is a dispute as to the purchase price, the seller shall be entitled, at its own expense, to have a separate appraisal performed and if the seller and City or its agent still can not agree as to the purchase price, the seller and City shall resolve the matter through binding arbitration.

## 6. MONITORING AND ENFORCEMENT.

6.1 Notice. The City agrees to provide notice pursuant to the SFHP of any violation or alleged violation of the terms and conditions of this Agreement and further agrees to give SFHP Developer/Successor in Interest 30 days to cure and violation under this Agreement. SFHP Developer/Successor in Interest agrees to provide the City with notice and 30 days opportunity to cure any violation of this Agreement.

6.2 Term. This Agreement shall become effective when signed by the SFHP Developer/Successor in Interest and the City, and shall remain in effect: (1) as to the SFHP Developer/Successor in Interest, until all SFHP Homes on the Property covered by this Agreement have been sold and all other obligations on the part of the SFHP Developer/Successor in Interest under this

SEC CLERK RECORDED 08/19/2024

Agreement have been satisfactorily discharged; and (2) as to the terms and conditions which apply to the SFHP Homebuyers, for as long as the Lien on the SFHP Home remains in effect under this Agreement, including any renewals.

6.3 Enforcement. It is understood and agreed by SFHP Developer/Successor in Interest that the remedies provided under this Agreement are additional remedies, not exclusive of any remedy under the law.

6.4 Release by City. City hereby agrees to release SFHP Developer/Successor in Interest from this Agreement upon fulfillment of all terms of this Agreement and to issue upon request a certificate of termination within a reasonable time of receipt of written request. The City will issue the certificate in recordable form stating (if such be the case) that this Agreement has been terminated, and any such certificate, when recorded with the Santa Fe County Clerk, shall be binding and conclusive on the City and all persons relying thereon.

## 7. MISCELLANEOUS PROVISIONS.

7.1 Recordation. SFHP Developer/Successor in Interest agrees to record this Agreement and thus the Lien prior to closing the sale of the SFHP Home so as to legally attach, run with the land and ensure that the purposes of the SFHP are met.

7.2 Successors and Assigns; Covenants to Run. This Agreement shall be legally binding on, as the obligations of, the parties and their respective successors and assigns, including without limitation, successors in title or interest to the Property, SFHP Home or this Agreement, who by their acceptance of any interest in the Property, SFHP Home or this Agreement shall be deemed to have agreed to perform and observe all the SFHP Developer/Successor in Interest's obligations under, and to be bound by all the terms and conditions of, this Agreement. Furthermore, all the agreements, rights and restrictions set forth in this Agreement shall run with the Property for the purpose of maintaining the SFHP Home as affordable housing throughout the term of this Agreement and the Liens entered into pursuant to this Agreement.

7.3 Reporting and Verification.

A. SFHP Developer/Successor in Interest agrees to sign an affidavit declaring that the sale price did not exceed the amount specified in this Agreement.

B. SFHP Developer/Successor in Interest agrees to provide such information and documentation as the City may reasonably require in order to ensure that the actual sale was in compliance with this Agreement.

C. SFHP Developer/Successor in Interest agrees to provide income verification in selling the SFHP Home for certification by the City or its agent as complying with the SFHP Ordinance.

D. SFHP Developer/Successor in Interest agrees to grant access to the City, or its agent, to inspect the records of SFHP Developer/Successor in Interest for the SFHP Home in order to determine compliance with the SFHP Ordinance and this Agreement.

7.4 Further Assurances. The parties agree to execute such documents as may be required to show the satisfactory compliance with SFHP and this Agreement. The City may certify current compliance with the SFHP on a unit by unit basis as may be reasonably requested by SFHP Developer/Successor in Interest, escrow agents, realtors, lenders or any other interested party.

SFC CLERK RECORDED 08/15/2024

7.5 City's Right to Enter. Each SFHP Developer/Successor in Interest hereby grants to the City the right to enter upon the SFHP Home upon reasonable notice for the purpose of inspection and enforcement of the SFHP, the Santa Fe City Code and this Agreement.

7.6 Survival of Enforcement Rights. Notwithstanding the definition of SFHP Developer/Successor in Interest contained in this Agreement, the rights of enforcement for violations of this Agreement shall survive any subsequent sale or transfer of the SFHP Home.

7.7 City's Zoning Authority Unimpaired. The City's rights to enforce any and all provisions of the Santa Fe City Code shall be the same as its rights generally to enforce any other ordinance, which shall in no way be diminished by this Agreement. The SFHP Developer/Successor in Interest acknowledges that this Agreement is included within the zoning authority and charter authority of the City, which is, and is hereby, accepted by the SFHP Developer/Successor in Interest as a sufficient but additional basis for this Agreement.

7.8 Notices. Any demand, notice or request by either party to the other shall be sufficiently given if in writing delivered to the party intended to receive the same, or if mailed by certified mail, return receipt requested, or delivered to a recognized national courier, or if given in a manner sufficient for legal process. Each notice to the SFHP Developer/Successor in Interest named above shall be addressed to such party, or to such other address as may be stated in a notice given as herein provided. Each notice to subsequent SFHP Developer/Successor in Interests shall be sufficiently given if addressed to or given at the SFHP Home.

7.9 Public Purpose. The City declares, and the SFHP Developer/Successor in Interest and each other person, including mortgagees, hereafter holding any interest in the Property or a SFHP Home acknowledges, that the Lien and this Agreement as well as all restrictions contained in this Agreement are for public purposes.

7.10 Sanctions. The City has the right to impose sanctions or take other actions as set forth in the SFHP Ordinance after notice of violation has been given and not complied with.

7.11 Headings Not Part of Agreement. Section headings have been inserted for convenient reference only and are not to be construed as part of this Agreement.

7.12 Severability. If any provision of this Agreement or the application thereof to any person or circumstances is held to be invalid or unenforceable by any decision of any court of competent jurisdiction, such decision shall not impair or otherwise affect any other provision of this Agreement, or the application of such provision to persons or circumstances other than those as to which it is held invalid or unenforceable.

7.13 Interpretation. This Agreement shall be enforceable according to its terms and New Mexico law. This Agreement is subject to the general principles of equity, fairness and reasonableness irrespective of whether such enforcement or interpretation is considered in a proceeding at equity or in law and shall be construed according to its purpose of fostering and preserving affordable housing. Any benefit to private parties arising under this Agreement is purely incidental to the purpose of creating affordable housing.

7.14 No Additional Payments. Nothing herein shall be deemed a requirement to pay to the City or its agent additional payments for amounts already paid to the Senior Lien holder. The borrower shall not be obligated to make such payments of funds to the City or its agent to the extent that

SFC CLERK RECORDED 08/19/2024

the borrower under the Senior Lien makes such payments to the Senior Lien holder in accordance with the Senior Lien.

7.15 No Waiver. No actions taken by the parties following a breach of any of the terms contained in this Agreement shall be construed to be a waiver of any claim or consent to any succeeding breach of the same or any other term.

7.16 Numbers and Genders. Whenever used herein, unless the context shall otherwise provide, the singular number shall include the plural, the plural the singular, and the use of any gender shall include all genders.

7.17 Agreement. This Agreement states the entire agreement of the parties. This Agreement shall not relieve SFHP Developer/Successor in Interest from complying with present or future City ordinances, duly adopted resolutions or regulations applicable to the development.

7.18 Amendments. This Agreement shall not be altered, changed or amended except by instrument in writing executed by the parties hereto. Any amendments to this Agreement shall be reviewed by the Office of Affordable Housing and sent, if applicable, to the appropriate review body as set forth in the SFHP Ordinance and then to the City Manager for approval.

AGREEMENT
PAGES: 14

COUNTY OF SANTA FE )
STATE OF NEW MEXICO ) ss

I Hereby Certify That This Instrument Was Filed for
Record On The 19TH Day Of August, 2024 at 01:57:28 PM
And Was Duly Recorded as Instrument # 2039899
Of The Records Of Santa Fe County

Witness My Hand And Seal Of Office
Katharine E. Clark
Deputy _____ County Clerk, Santa Fe, NM

SFC CLERK RECORDED 08/19/2024

WHEREFORE, the parties set their hands and seals this 13th day of August, 2024.

ATTEST:

GERALYN CARDENAS
INTERIM CITY CLERK

CITY OF SANTA FE:

JOHN W. BLAIR
CITY MANAGER

APPROVED AS TO FORM:

PATRICIA FEGHALI
ASSISTANT CITY ATTORNEY

APPROVED FOR FINANCES:

7/31/24

EMILY OSTER
FINANCE DIRECTOR

SFC CLERK RECORDED 08/19/2024

SFHP DEVELOPER/SUCCESSOR IN INTEREST:

By:_____
Signature

_____
Printed Name

Its:_____
Title

SFHP DEVELOPER/SUCCESSOR IN INTEREST: Pulte Homes of NM

By: _____
Signature

Kevin Patton
Printed Name

Its: Director of Land Planning and Entitlements
Title

ACKNOWLEDGEMENTS

STATE OF NEW MEXICO )
Bernalillo ) ss.
COUNTY OF ~~SANTA FE~~ )

The foregoing instrument was acknowledged before me this 8th day of July, 2024 by Kevin Patton, Director of Land Planning and Entitlements of Pulte Homes of New Mexico, a Michigan corporation, on behalf of said corporation.

_____
NOTARY PUBLIC

My Commission Expires:

11.8.27

LORI A WILSON
Notary Public
State of New Mexico
Comm. # 2001270
My Comm. Exp. Nov 8, 2027

Attachments: Exhibit A: The Property
Exhibit B: SFHP Plan

SFC CLERK RECORDED 08/19/2024

EXHIBIT A

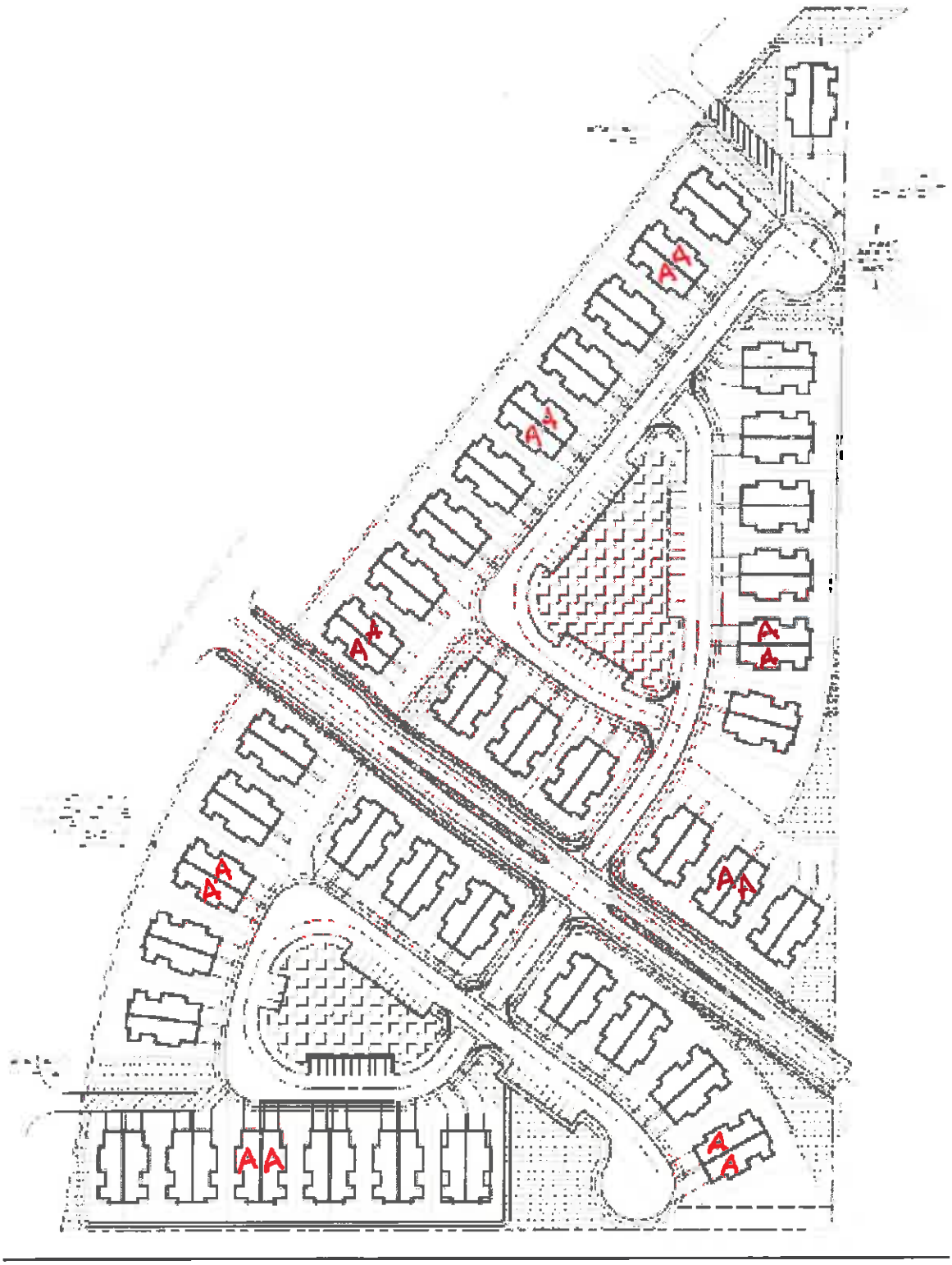

SEC CLERK RECORDED 08/19/2021

EXHIBIT B

# SANTA FE HOMES PROGRAM
# SFHP PLAN AND HOME SALES PRICING SCHEDULE

Effective June 15, 2023*

**(without green code adjustment pricing, unless noted)**

| *Income Range* | *Two Bedrooms* *1-2 person HH* *(900 sq min)* | *Three Bedrooms* *3-4 person HH* *(1,150 sq ft min)* | *Four Bedrooms* *4-5 person HH* *(1,250 sq ft min)* |
|---|---|---|---|
| **2 (50-65%AMI)** | Max. Price $161,250<br>0 Unit | Max. Price $181,500<br>2 Unit | Max. Price $201,500<br>1 Unit |
| **3 (65-80%AMI)** | Max. Price $209,750<br>0 Unit | Max. Price $236,000<br>7 Unit | Max. Price $262,000<br>1 Unit |
| **4 (80-100%AMI)** | Max. Price $258,000<br>0 Unit | Max. Price $290,250<br>4 Unit | Max. Price $322,500<br>1 Units |

Prices reflect June 2023 HUD Area Median Incomes for Santa Fe. Refer to Section 26-1.16 (B) and the SFHP Administrative Procedures. For specific requirements, contact The Office of Affordable Housing.

# AFFORDABILITY CALCULATION

**Single Family/Condo Building Lots**

The project has an area of approximately 16.21 acres, zoned R-10, permitting 10 dwelling homes per acre. The required number of SFHP units is 20% of the total units, 5% each in Income Ranges 2 and 4 and 10% in Income Range 3. The project proposes **80 of total lots** for development as single family/condo homes.

**CALCULATION for the SFHP requirement:**

= Total number of units multiplied by (0.2) = # of Units Required
= 80 total units x 0.2 = **16 SFHP unit**(s) are required
= 16 lots/units delivered and a fractional fee paid for 0 units

**CALCULATION for the Fractional Fee:**

= ½ price of 3 BR, Tier 2 Home X Unit Fraction
= $92,875 X 0.#
= **$0 No fractional fee**

---

**NOTE:** The home prices and fractional fee schedule are modified by the City according to Section 8.7.3 of the SFHP Administrative Procedures to reflect annual changes in the median income levels. The SFHP Home prices shown in this SFHP Agreement are the prices in effect at the time this Agreement is made. The current SFHP prices that are in effect at the time the SFHP Home is made available for sale or the fractional fees are paid, determines the actual SFHP Home Price and/or amount of fractional fee. The prices are updated annually.

SFC CLERK RECORDED 08/19/2024

July 2, 2021

SFPS
Santa Fe Public Schools
*Striving for Excellence*

James W. Siebert & Associates
915 Mercer Street
Santa Fe, NM 87505
Phone (505) 983-5588
Fax (505) 989-7313

By Email: jim@jwsiebert.com

RE: Caja del Oro Grant Subdivision

Dear Mr. Siebert,

Santa Fe Public Schools has reviewed information received from your firm regarding the above referenced project. Given the estimated build out projections for the development plan, current capacities at assigned schools will be adequate to serve the anticipated student population from this development.

We appreciate your observance of City Ordinance 2008-32 allowing Santa Fe Public Schools to adequately plan for impact to facilities and operations.

Sincerely,

Gabe D. Romero

Gabe D. Romero
Executive Director of Operations

City of Santa Fe, New Mexico

# Caja del Oro Phase 2
# Planning Commission
# Attachment C

## Figures and Maps

1. Figure 1 – Approved Final Subdivision Plan Phase 2
2. Figure 2 – Adjacent Zoning
3. Figure 3 – Proposed Trails
4. Figure 4 – View of Overall Area
5. Figure 6 – View north along Caja del Oro Grant Road
6. Figure 7 – View to Caja del Oro Rd from Frontage Rd

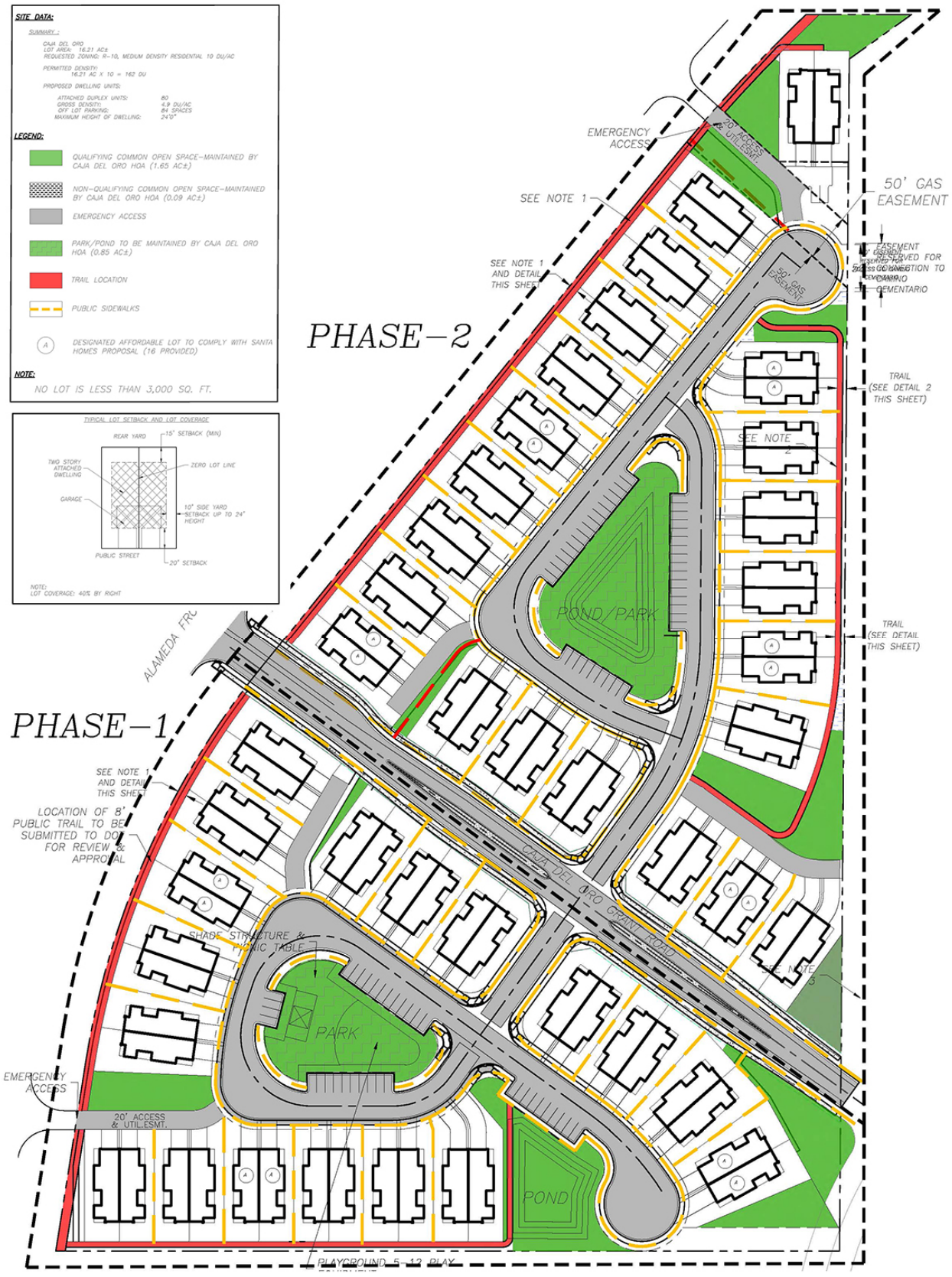


*Figure 1 - Approved Final Subdivision Plan Phase 2*

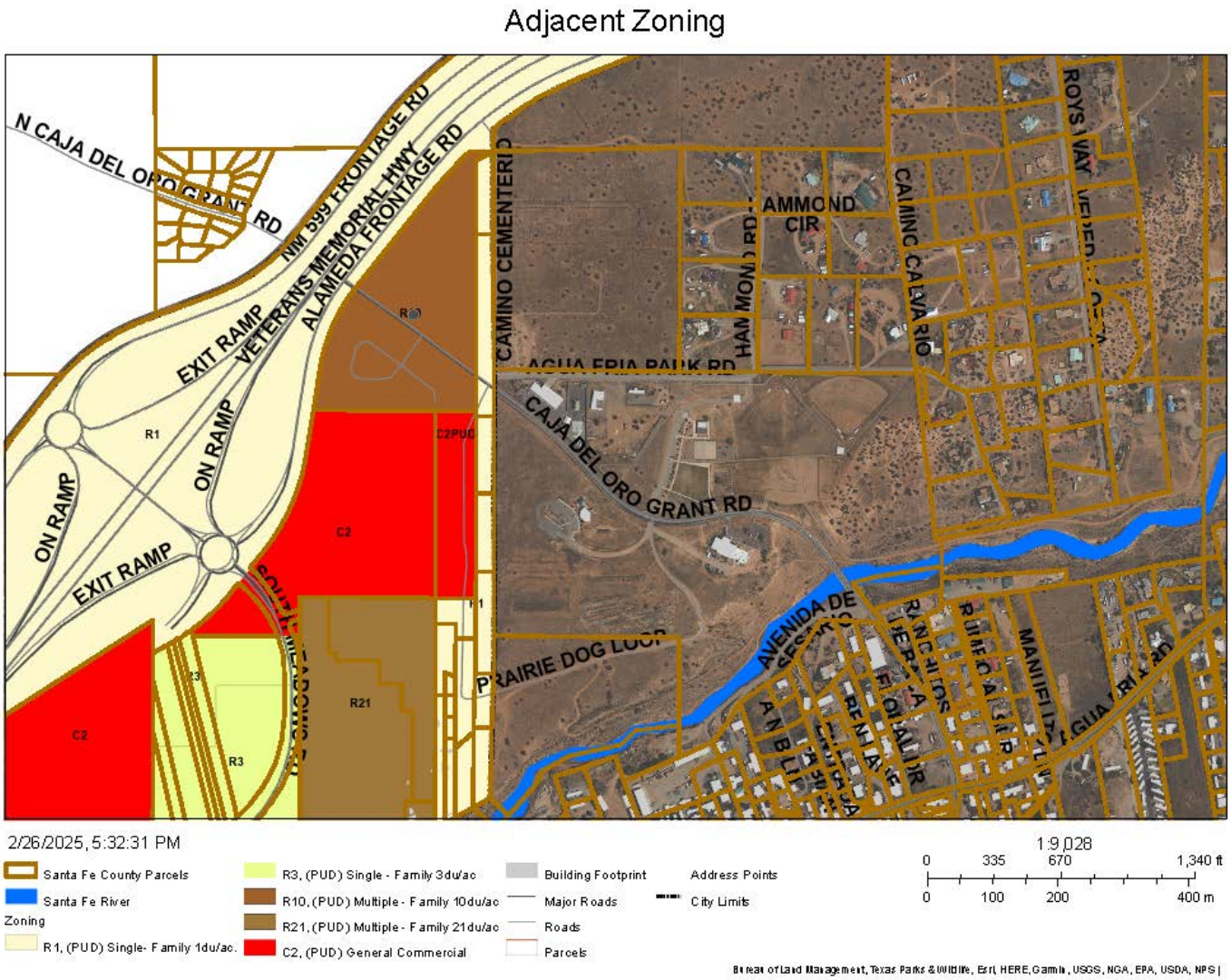


*Figure 2 - Adjacent Zoning*

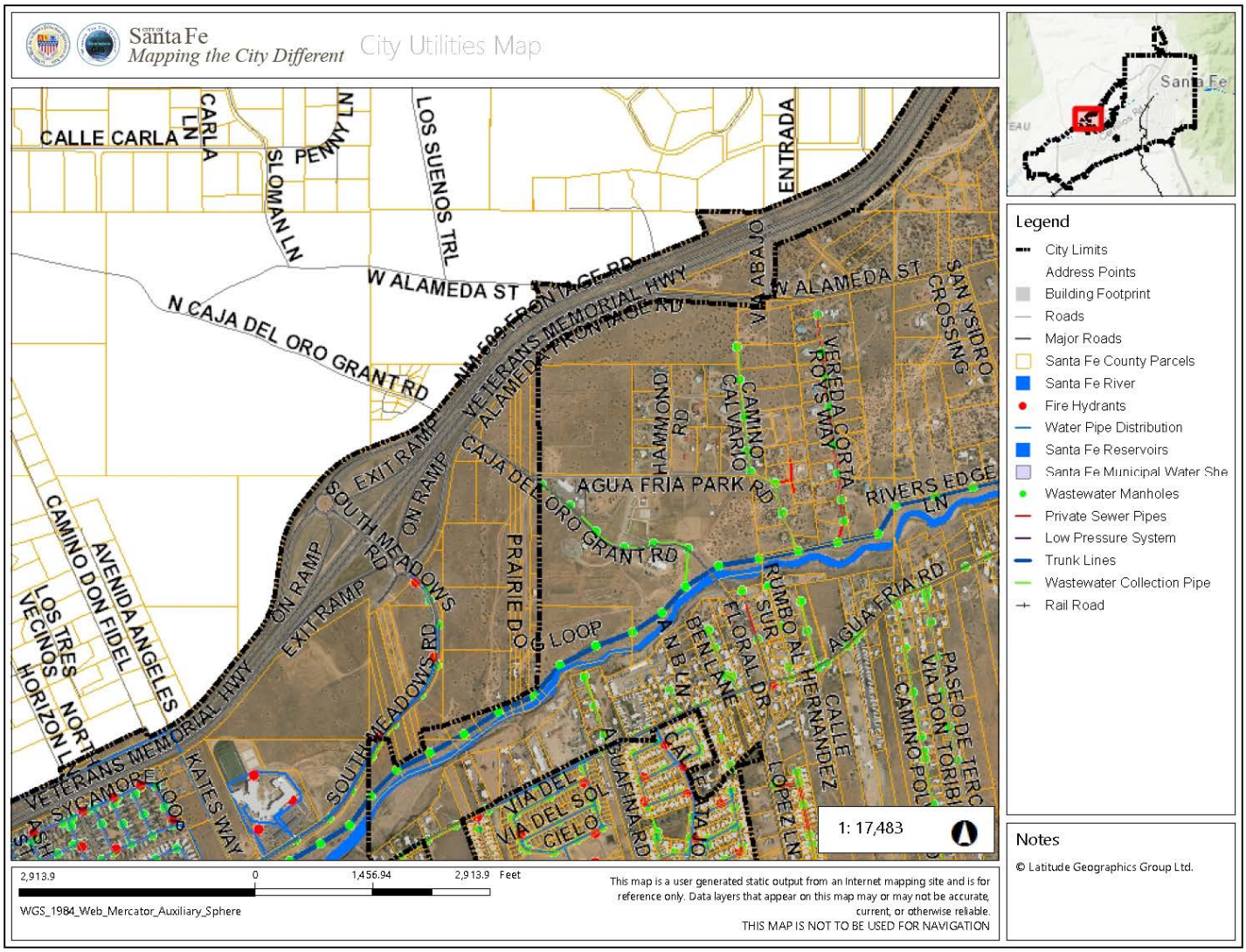


*Figure 3- Proposed Trails*

## Caja del Oro Subdivision

**Google Earth and Street View**




**View of the overall area from the south.**

*Figure 4- View of Overall Area*



*Figure 6 - View north along Caja del Oro Grant Road*




*Figure 5- View to Caja del Oro Grant Road from Frontage Road*

City of Santa Fe, New Mexico

# Caja del Oro Phase 2
# Planning Commission
# Attachment D

## Early Neighborhood Notification Materials

1. ENN Guidelines
2. Meeting Notes
3. School Notification

# ENN GUIDELINES

**Applicant Information**

Project Name: **Caja del Oro Subdivision, Rezoning, General Plan Amendment, Development plan & Preliminary Subdivision plat**

Name: **Siebert** (*Last*) **James** (*First*) **W** (*M.I.*)

Address: **915 Mercer Street** (*Street Address*) (*Suite/Unit #*)

**Santa Fe, NM 87505** (*City*) **NM** (*State*) **87505** (*ZIP Code*)

Phone: **( 505 ) 983-5588** E-mail Address: **jim@jwsiebert.com**

***Please address each of the criteria below. Each criterion is based on the Early Neighborhood Notification (ENN) guidelines for meetings, and can be found in Section 14-3.1(F)(5) SFCC 2001, as amended, of the Santa Fe City Code. A short narrative should address each criterion (if applicable) in order to facilitate discussion of the project at the ENN meeting. These guidelines should be submitted with the application for an ENN meeting to enable staff enough time to distribute to the interested parties. For additional***

**(a) EFFECT ON CHARACTER AND APPEARANCE OF THE SURROUNDING NEIGHBORHOODS** ***For example: number of stories, average setbacks, mass and scale, landscaping, lighting, access to public places, open spaces and trails.***

*There is limited development in the immediate vicinity of the project. The NM 599 frontage road (AKA Alameda) to the west of the property. To the east is principally vacant land zoned R-1, Single Family Residential. The County Fire station is located to the southeast, north of Caja del Oro Road and the Nancy Rodriguez County Community Center is located to the east, south of Caja del Oro. The dwellings will be two stories, 24 feet in height. The buildings will consist of two attached units with building separations between the two units. The interior roads do require streetlights, most likely at the intersection of Caja del Oro Grant Road and the project intersections. The is a proposed trail within what appears to be the NM 599 right-of-way and along the Santa Fe River. There are no proposed trail alignments on the subject property.*

**(b) EFFECT ON PROTECTION OF THE PHYSICAL ENVIRONMENT** ***For example: trees, open space, rivers, arroyos, floodplains, rock outcroppings, escarpments, trash generation, fire risk, hazardous materials, easements, etc.***

*This is an exceptionally flat land without well defined drainages. There are no flood plains, rock out-cropping's or escarpments associated with the subject land. The only fire risk at this time is from grassland fires. There is a fire station a short distance from the property. The presence of hazardous materials is unknown at this time. There is an easement across the southeast corner of the property for Prairie Dog Loop and a 38 foot access and utility easement in the interior of the property that is a remnant from the prior shopping center approval.*

**(c) IMPACTS ON ANY PREHISTORIC, HISTORIC, ARCHAEOLOGICAL OR CULTURAL SITES OR STRUCTURES, INCLUDING ACEQUIAS AND THE HISTORIC DOWNTOWN** ***For example: the project's compatibility with historic or cultural sites located on the property where the project is proposed.***

*There are no known historic sites on the property but that will have to be validated by an archaeological report. There is a small cemetery east of the northern parcel that has some history to it. It is outside the boundary of this project. There are no acequias on the property and the project is not located within downtown Santa Fe, being that area that is close to the plaza.*

**(d) RELATIONSHIP TO EXISTING DENSITY AND LAND USE WITHIN THE SURROUNDING AREA AND WITH LAND USES AND DENSITIES PROPOSED BY THE CITY GENERAL PLAN** ***For example: how are existing City Code requirements for annexation and rezoning, the Historic Districts, and the General Plan and other policies being met.***

*The density in the more immediate area is almost non-existent since the majority of land in the immediate area is vacant. This property was originally approved in the extraterritorial area as a mixed use development with retail shopping and higher density residential uses. As a consequence the City recognized the property at the time of the City initiated annexation as appropriate for general commercial, C-2 zoning. There are three long narrow strips of land to the east of the C-2 zoning that are vacant and zoned R-1, Single Family Residential, 1 dwelling per acre. The city general plan recognizes the previous mixed use county approval and has designated this prior commercial area as community commercial on the Future Land Use Map. The adjoining residential area to the east is designated as residential at one dwelling per acre. All areas that are annexed by the city that do not come in with a distinct land use designation are zoned at the lowest density which is one dwelling per acre. They are in essence a holding zone for future land use development based on a site specific plan.*

(e) *EFFECTS ON PARKING, TRAFFIC PATTERNS, CONGESTION, PEDESTRIAN SAFETY, IMPACTS OF THE PROJECT ON THE FLOW OF PEDESTRIAN OR VEHICULAR TRAFFIC AND PROVISION OF ACCESS FOR THE DISABLED, CHILDREN, LOW-INCOME AND ELDERLY TO SERVICES For example: increased access to public transportation, alternate transportation modes, traffic mitigation, cumulative traffic impacts, pedestrian access to destinations and new or improved pedestrian trails.*

*The property is adjacent to the NM 599 frontage road and is a short distance from the I-25 and South Meadows roundabout interchange of South Meadows Road with NM 599. There is no close-by public transportation in this part of the city. The interior streets will be constructed to city street standards and sidewalks will be available throughout the project. Traffic on Caja del Oro Grant Road is currently limited.*

**(f) IMPACT ON THE ECONOMIC BASE OF SANTA FE For** ***example: availability of jobs to Santa Fe residents; market impacts on local businesses; and how the project supports economic development efforts to improve living standards of neighborhoods and their businesses.***

*Jobs will be created during the development of infrastructure and the construction of housing. The residents of the development will shop in Santa Fe for groceries and some retail. There are a limited number of local businesses in the immediate area to serve the future residents of this development.*

**(g) EFFECT ON THE AVAILABILITY OF AFFORDABLE HOUSING AND AVAILABILITY OF HOUSING CHOICES FOR ALL SANTA FE RESIDENTS** ***For example: creation, retention, or improvement of affordable housing; how the project contributes to serving different ages, incomes, and family sizes; the creation or retention of affordable business space.***

*The developer will be required to construct housing which satisfies the city affordability requirements. These homes will be provided at a lower price point than some of the homes in the Pulte housing spectrum. These homes will be more affordable to working families. No commercial is proposed for the project so there is no opportunity for affordable business space.*

**(h) EFFECT UPON PUBLIC SERVICES SUCH AS FIRE, POLICE PROTECTION, SCHOOL SERVICES AND OTHER PUBLIC SERVICES OR INFRASTRUCTURE ELEMENTS SUCH AS WATER, POWER, SEWER, COMMUNICATIONS, BUS SYSTEMS, COMMUTER OR OTHER SERVICES OR FACILITIES For** ***example: whether or how the project maximizes the efficient use or improvement of existing infrastructure; and whether the project will contribute to the improvement of existing public infrastructure and services.***

*There is a fire station in close proximity to the project. The El Camino Real School is located on South Meadows Road approximately one mile from the development measured along NM 599 frontage road and South Meadows Road. The Police station is located in the Valdes Business Park which is a considerable distance from the property. The city committed to providing police protection to this area when the city initiated the annexation of the southern urban area. Water will have to be brought into the site from Caja del Oro Grant Road. At this point, without final engineering, it appears it will be necessary to extend sewer offsite to connect to a sewer line on South Meadows Road. Public transportation is not available to this area of the city.*

**(i) IMPACTS UPON WATER SUPPLY, AVAILABILITY AND CONSERVATION METHODS** ***For example: conservation and mitigation measures; efficient use of distribution lines and resources; effect of construction or use of the project on water quality and supplies.***

*City water will have to be brought to the property from off-site on Caja del Oro Grant Road. A request for investigation of the water system capacity and likely line extension has been submitted to the city Water Division. All new development is required by city code to offset its water use by either paying a fee for water conservation credits or purchasing water rights and transferring water rights to the city. It appears that the annual water use will exceed 10 acre feet, requiring the purchase and transfer of water rights to the city.*

**(j) EFFECT ON THE OPPORTUNITIES FOR COMMUNITY INTEGRATION AND SOCIAL BALANCE THROUGH MIXED LAND USE, PEDESTRIAN ORIENTED DESIGN, AND LINKAGES AMONG NEIGHBORHOODS AND RECREATIONAL ACTIVITY AND EMPLOYMENT CENTERS** ***For example: how the project improves opportunities for community integration and balance through mixed land uses, neighborhood centers and/or pedestrian-oriented design.***

*The attached duplex units are the more affordable of the Pulte products. In addition 20 percent of the units will satisfy the affordable housing requirement. There is no neighborhood commercial component to the project nor is that permitted by the requested R-10 zoning. There are sidewalks proposed on either side of a public road. There is a proposed community area within the development on either side of Caja del Oro*

*Road to be developed as an amenity area for each of the proposed developed areas on either side of Caja del Oro Road.*

**(k) EFFECT ON SANTA FE'S URBAN FORM For *example: how are policies of the existing City General Plan being met? Does the project promote a compact urban form through appropriate infill development? Discuss the project's effect on intra-city travel and between employment and residential centers.***

*This area was located at the perimeter of the urban area. Developments such are the South Meadows apartments and the El Camino Real Middle School are changing the nature of this area. The construction of South Meadows road from Agua Fria to the NM 599 roundabout intersection and the construction of utilities have led to the urbanization of the area south of NM 599. Currently there are no plans to provide public transportation to this area. As the area continues to develop and the residential densities can justify a public transportation system there will have to be a reevaluation of this area. The employment areas closest to this development are along Airport Road and Cerrillos Road. Access is available to Airport Road and Cerrillos Road via Caja del Oro Grant Road, Lopez Lane and Rufino Street east and west of Lopez Lane.*

# City of Santa Fe
# Land Use Department
# Early Neighborhood Notification
# Meeting Notes

| | |
|---|---|
| *Project Name* | Caja del Oro Subdivision |
| *Project Location* | 1905, 1950, 0, 0 and 1941 Caja del Oro Grant Road and 4, 5 & 7 Hernandez Road. |
| *Project Description* | Requests approval of a General Plan Future Land Use Map Amendment to change the Future Land Use Classification from Very Low Density Residential (1-3 dwelling units per acre) to Medium Density Residential (7-12 dwelling units per acre); requests rezoning approval from R-1 (Residential- 1 dwelling unit per acre) to R-10 (Residential- 10 dwelling units per acre) and C-2 (General Commercial) to R-10 (Residential-10 dwelling units per acre); requests approval of a Development Plan for an 88 single-family home development; requests approval of a Preliminary Subdivision Plat for 88 single-family lots. |
| *Applicant / Owner* | The Pulte Group of New Mexico |
| *Agent* | James Siebert, of James W. Siebert and Associates |
| *Pre-App Meeting Date* | April 8, 2021 |
| *ENN Meeting Date* | May 11, 2021 and August 10, 2021 |
| *ENN Meeting Location* | Virtual meeting with Zoom |
| *Application Type* | General Plan Amendment, Rezoning, Preliminary Development Plan, & Preliminary Subdivision Plat |
| *Land Use Staff* | Donna Wynant |
| *Other Staff* | N/A |
| *Attendance* | Seven members of the public; the developer's team, and City staff person. |

**Notes/Comments:**

Meeting was started by James Siebert at 5:30 pm with a welcoming and introduction of the development team. He showed the location of the project site, the surrounding land use and the streets in the area. He pointed out that the closest residential property was along Camino Cementerio which was separated from their property by a 110' strip of land.

The request is to rezone the property from the existing C-2 and R-1 to the R-10 district. The C-2 is approximately 10 acres and the R-1 is approximately 6 acres. The proposal is to create a subdivision for 88 single family lots at a density of 5.5 dwelling unit per acre. Mr. Siebert gave a comparison between what the existing C-2 zoning could allow in terms of number of units with its anticipated traffic compared to the requested R-10 zoning. This was their second ENN with their first being held on May 11th where they proposed an 80 lot subdivision. Since they decided to eliminate the alleys that gave access to the rear of some of the homes, they were able to get 88 homes on the property with the garages facing inwards to the development. Sewer is already available at the southeast corner of the site, but the water would have to be extended from where it currently ends on South Meadows Road.

Mr. Siebert gave an overview of the likely components of the request and the timing when they anticipated going to Planning Commission for public hearing.
A question was asked about the additional lots. Mr. Siebert said they thought it would be better to just eliminate the alleys which then resulted in more land for to increase the number from 80 to 88 lots.

Mr. William Mee asked about the connection to City water, where they're now on wells, and why they would connect to City water and pay the more expensive City rates. He asked why the additional 8 units and are they affordable units. He also asked why they wouldn't just have a roundabout on Caja del Oro at the street that crossed over Caja del Oro that connected the two parts of the subdivision. Mr. Siebert stated that their traffic engineer will produce a traffic study and evaluate everything at that point which he'll be able to review at that point since it's public information.

A woman asked about the height limit of 24 feet and the arrangement of the houses with the lots and how they would face the streets. Kevin Patton of Pulte said that if people wanted to see a similar arrangement of homes they could look at the homes along Railrunner where they originally had alleys to go behind the homes, but decided to redesign the lots to where the houses faced the street with no alleys in the back.

Another neighbor asked about whether the development would connect or stub out to Camino Cementerio. A 110 foot wide strip of land separated the proposed subdivision ant the street, so at this point it would not connect.

The meeting adjourned at 6:05.

July 2, 2021

SFPS
Santa Fe Public Schools
*Striving for Excellence*

James W. Siebert & Associates
915 Mercer Street
Santa Fe, NM 87505
Phone (505) 983-5588
Fax (505) 989-7313

By Email: jim@jwsiebert.com

RE: Caja del Oro Grant Subdivision

Dear Mr. Siebert,

Santa Fe Public Schools has reviewed information received from your firm regarding the above referenced project. Given the estimated build out projections for the development plan, current capacities at assigned schools will be adequate to serve the anticipated student population from this development.

We appreciate your observance of City Ordinance 2008-32 allowing Santa Fe Public Schools to adequately plan for impact to facilities and operations.

Sincerely,

Gabe D. Romero

Gabe D. Romero
Executive Director of Operations

City of Santa Fe, New Mexico

# Caja del Oro Phase 2
# Planning Commission
# Attachment E

## Applicant Submittals

1. **Final Plat Development Report**
2. **Phase 2 Landscape Drawing Set**
3. **Phase 2 Infrastructure Drawing Set**
4. **Phase 2 TIA**

# CAJA DEL ORO PHASE II

# (AKA PRADO SUBDIVISION)

# FINAL PLAT

# DEVELOPMENT REPORT

## PREPARED FOR

## PULTE GROUP OF NEW MEXICO

## PREPARED BY

## NM LAND SOLUTIONS LLC., D/B/A SIEBERT & ASSOCIATES INC.

## OCTOBER 2024

# TABLE OF CONTENTS


| | |
|---|---|
| **Project Location** | 2 |
| **Development Request** | 2 |
| **Figure 1: Vicinity Map** | 3 |
| **Figure2: Phasing Plan** | 4 |
| **History of Approvals** | 5 |
| **Project Ownership** | 6 |
| **Legal Lot of Record** | 6 |
| **Existing Conditions** | 6 |
| **Environmental Review** | 6-7 |
| *Archaeology* | |
| *Flood Plain* | |
| *Slopes and Terrain Conditions* | |
| *Drainage* | |
| **Traffic and Pedestrian Circulation** | 7-8 |
| **Fire Protection** | 8 |
| **Utilities** | 8-9 |
| *Water* | |
| *Sewer* | |
| *Natural Gas* | |
| *Electric* | |
| *Telephone* | |
| *Comcast* | |
| **Water Budget** | 9-10 |
| **Open Space, Park Land & Trails** | 10 |
| **Terrain Management & Erosion Control** | 10 |
| **Public Schools** | 10-11 |
| **Subdivision Covenants** | 11 |
| **Santa Affordable Homes Proposal** | 11 |
| **Response to Subdivision Criteria** | 11-13 |


**APPENDICES**


| | |
|---|---|
| Appendix A | Proposed Phase-2 Final Plat |
| Appendix B | December 1, 2022, Findings of Fact & Conclusion of Law (Phase-2 Grading Approval) |
| Appendix C | Warranty Deeds |
| Appendix D | Legal Lot of Record Plats |
| Appendix E | Archaeological and Historic Clearance |
| Appendix F | SFPS Letter |
| Appendix G | Santa Fe Home Proposal |

## PROJECT DESCRIPTION & LOCATION

The subject Final Plat request is submitted on behalf of the Pulte Group of New Mexico and pertains to *Phase 2* of the approved Caja del Oro (Prado) Subdivision.

The development encompasses approximately 16.2 acres consisting of two phases. It is strategically located south of Caja del Oro Grant Road and east of the NM599 Frontage Road.

A vicinity map detailing the two-phase development is provided as *Figure 1* of this report.

## DEVELOPMENT REQUEST

The Pulte Group of New Mexico has obtained prior Final Development Plan approval for a comprehensive two-phase development that includes a total of eighty (80) townhome lots

Specifically, Phase 1 consists of thirty-six (36) lots, while *Phase 2* will incorporate *forty-four (44) lots.*

A graphic representation of the approved Final Development Plan, illustrating both phases of development, is included as Figure 2 of this report.

The proposed Final Plat for Phase 2 aligns with the previously approved Final Development Plan, the Final Plat for Phase 1, and the Preliminary Plat approval for both Phase 1 & Phase 2.

The prior approvals also considered various factors such as ***grading both phases 1 & 2 simultaneously***, minimum and maximum lot sizes, building setbacks, overall density, parking requirements, and enhancements to open space and trail systems near and within the Caja del Oro aka Prado subdivision. (See ***Appendix A***)

Phase-2 Site Data:

The proposed Phase-2 of the development will consist of forty-four (44) platted lots, including open space / playground and trail improvements as depicted on the proposed Phase-2 Final Plat as depicted in ***Appendix A*** (Proposed Phase-2 Final Plat).

Phase-2 data is provided below:

- Approximate Phase-2 Acreage: 9.07 (±) acres
- Total number of lots: 44
- Market rate lots: 34
- Affordable housing lots: 10
- Overall Average density: 3.9 dwellings per acre
- Phase 1 & 2 Open Space/Park Land/Pond: .85 acre

Furthermore, all proposed lots are larger than 3,000 square feet, therefore, no offsetting common open space is required to satisfy minimum lot size requirements.

**Figure 1**

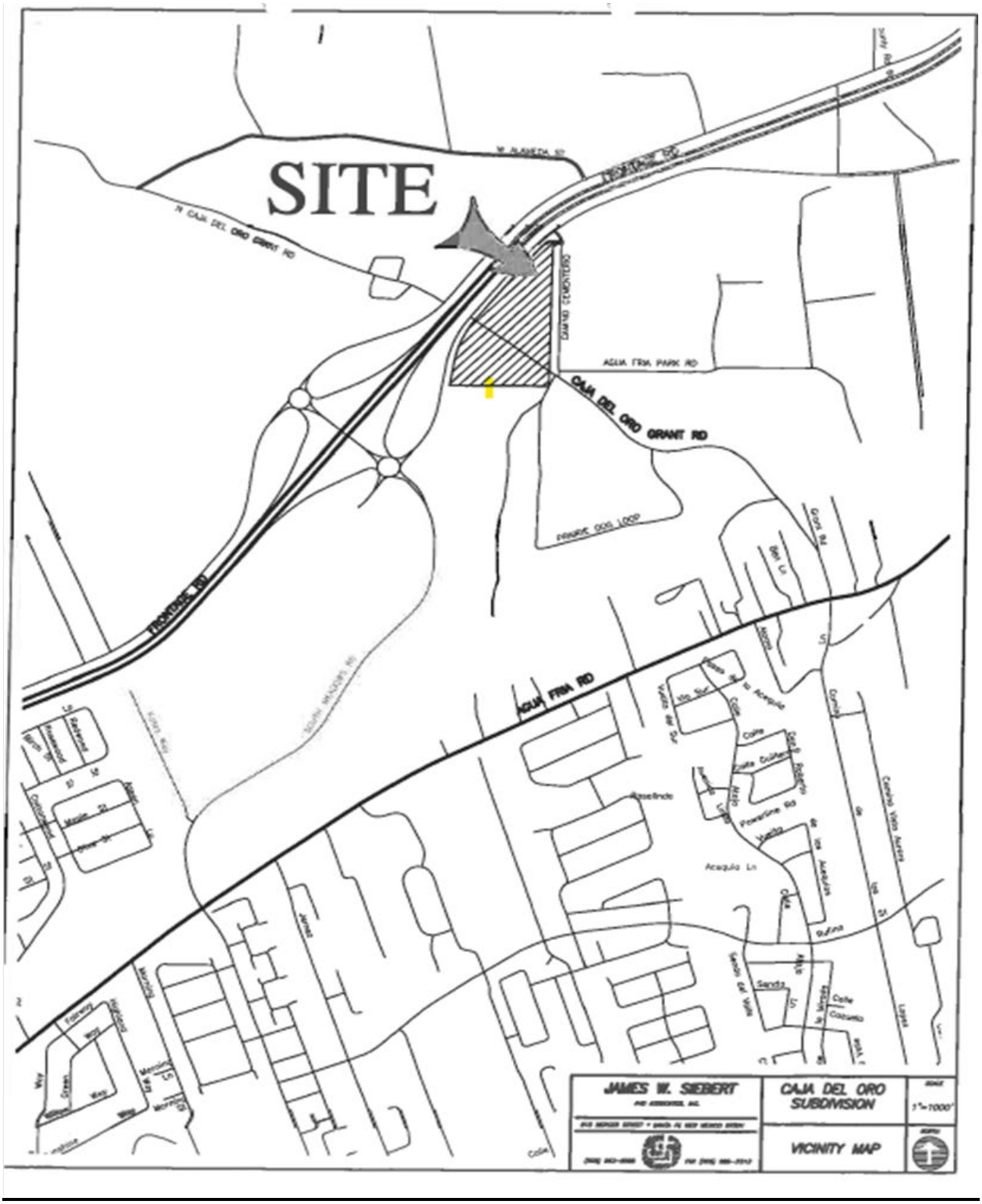
SITE
CAJA DEL ORO GRANT RD
AGUA FRIA PARK RD
AGUA FRIA RD
FRONTAGE RD
JAMES W. SIEBERT
CAJA DEL ORO SUBDIVISION
VICINITY MAP

**Figure 2**

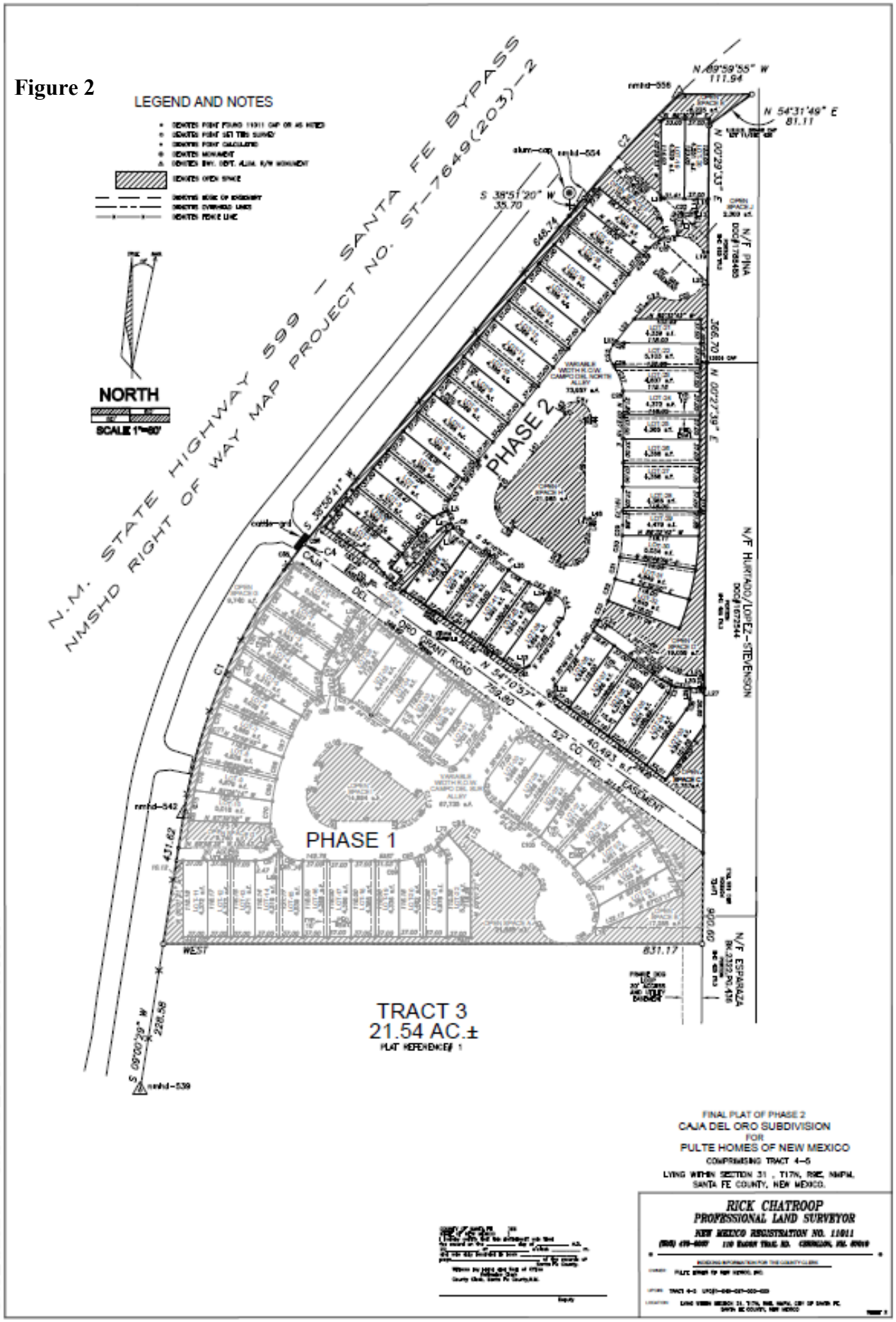
LEGEND AND NOTES
NORTH
SCALE 1"=60'
N.M. STATE HIGHWAY 599 – SANTA FE BYPASS
NMSHD RIGHT OF WAY MAP PROJECT NO. ST-7649(203)-2
PHASE 1
PHASE 2
TRACT 3
21.54 AC.±
CAJA DEL ORO GRANT ROAD
57' CO. RD. EASEMENT
N/F PINA
N/F HURTADO/LOPEZ-STEVENSON
N/F ESPARAZA
WEST
FINAL PLAT OF PHASE 2
CAJA DEL ORO SUBDIVISION
FOR
PULTE HOMES OF NEW MEXICO
COMPRISING TRACT 4-5
LYING WITHIN SECTION 31 , T17N, R9E, NMPM,
SANTA FE COUNTY, NEW MEXICO.
RICK CHATROOP
PROFESSIONAL LAND SURVEYOR
NEW MEXICO REGISTRATION NO. 11011

## HISTORY OF APPROVALS

The proposed Caja del Oro subdivision consists of various approvals that have been obtained prior to the submittal of the subject request for Final Development Plan and Final Subdivision Plat approval, to create eighty (80) single-family attached townhome units / lots.

Below is the history and background information for the Caja del Oro Subdivision:

**On February 17, 2022 -** The City of Santa Fe Planning Commission recommended approval to the Governing Body for General Plan Amendment to amend the Future Land Use designation from Community Commercial to Medium-Density Residential (7-12/du/acre) and from Low-Density Residential (1 du/ acre) to Medium-Density Residential (7-12 du/acre) as well as recommending approval of a Rezoning from C-2 – R-10 and R-1 to R-10.

In addition, due to design issues, the Planning Commission postponed taking any action on the accompanying Preliminary Development Plan and Preliminary Plat requests for an eighty-eight (88) lot subdivision in order to allow the developer to redesign the project related to concerns from the commission regarding pedestrian circulation within the proposed development as well as proposed setbacks between each home.

**On June 2, 2022 -** The Planning Commission reheard the postponed Preliminary Development Plan and Preliminary Subdivision Plat request from February 17, 2022 and approved the redesigned Preliminary Development Plan and Preliminary Subdivision Plat, which took prior redesign comments / recommendations from the commission into consideration, which lead to the number of lots being reduced from eighty-eight (88) to eighty (80) lots in order to provide better pedestrian circulation as well as increase setbacks between units / lots. In addition, it was unanimously agreed upon by the commission that the redesign addressed all prior Planning Commission concerns by increasing the separation between homes providing for better pedestrian circulation to houses and proposed trails.

Furthermore, the interior roadways remained as described / proposed as part of the preliminary plat approval. The same applies to the management of storm water and terrain management.

Lastly, with the number of homes being reduced from eighty-eight (88) homes to eighty (80) homes, the gross density of the project went from 5.4 dwellings per acre to 4.9 dwellings per acre.

**On September 28, 2022 -** The Governing Body (City Council) unanimously approved a request for General Plan Amendment and Rezoning of the subject property in accordance with the Planning Commission's recommendation to amend the Future Land Use designation from Community Commercial to Medium-Density Residential (7-12/du/acre) and from Low-Density Residential (1 du/ acre) to Medium-Density Residential (7-12 du/acre) as well as approval of Rezoning from C-2 – R-10 and R-1 to R-10.

**On December 1, 2022** – The Planning Commission approved Preliminary and Final Development Plan including Final Plat for Phase-1 and Preliminary Plat for Phase 2, requiring Planning Commission approval for the final plat of phase 2. The Planning Commission also granted the approval for grading to take place on both Phases 1 & 2, so long as a financial guarantee was done for the entire project (i.e. both phases). Please see ***Appendix B*** for more information / approved Findings of Fact and Conclusion of Law associated with the December 1, 2022, approvals.

## PROJECT OWNERSHIP

The subject site is owned by Pulte Homes of New Mexico Inc. an Incorporated Company registered in New Mexico. The recorded warranty deeds are included in the report as ***Appendix C.***

## LEGAL LOT OF RECORD

The Legal Lot of Record for the entire 16.21 acres was established by a Lot Line Adjustment and Lot Consolidation Plat recorded in the office of the County Clerk in Book 901, Page(s) 18-19 and is included as ***Appendix D.***

## EXISTING CONDITIONS

Caja del Oro Grant Road is an existing / established easement between the two (2) parcels and is part of the total 16.2 (±) acre area / site under consideration. Also, Caja del Oro Grant Road was part of the settlement agreement between the City of Santa Fe and Santa Fe County as part of the City of Santa Fe initiated annexation of the subject area.

Additionally, there is an existing cemetery to the east, which is owned and maintained by the Catholic Church / Archdiocese. The existing cemetery is one (1) parcel to the east from the eastern boundary of Caja de Oro with a separation of approximately one-hundred-feet (100') between Caja del Oro and the cemetery boundary.

There are also two (2) undeveloped roadways on the southside of Caja del Oro Grant Road. The first of which is Prairie Dog Loop that crosses the southeast corner of the southern parcel. The second existing roadway within the vicinity of the subject site is Hernandez Lane, which intersects with Prairie Dog Loop south of the proposed Caja del Oro development. An easement has been preserved across the subject site / property for Prairie Dog Loop.

## ENVIRONMENTAL REVIEW

*Archaeology*

Mr. Ron Winter Archologist has conducted an archaeological survey of the property. No historical material found on the property is considered to be significant per archaeological survey standards. The archaeological clearance issued by the City Archaeological Committee is found in ***Appendix E.***

*Flood Plain*

There is no FEMA designated flood plain designation(s) on the subject property. The closest drainage that is described as having a 100-year floodplain is the Santa Fe River which is approximately 1.5 miles from the eastern boundary of the subject property / proposed development.

*Existing Slope and Terrain Conditions*

There are no natural slopes on the property that exceed thirty percent (30%) or slopes of twenty-to-thirty percent (20-30%) that require terrain management standards for placement of homes on

steep slopes. The land can be classified as gentle with an average slope of less than five percent (5%) grade throughout. Additionally, the property generally slopes from north to the south as the south and north parcels drain southward.

There are currently two (2) drop inlets in Caja del Oro Grant Road that serve as an equalizing basin for ponding that occurs in the area during rains / storms. Stormwater is carried across from the low point at the north end of the southern parcel into the south parcel to a pond at the southeast corner of the property.

The collected stormwater from this pond is released at historic rates calculated for both parcels.

A detailed Engineered drainage report has been submitted under a separate cover and has been included in the overall application submittal documents.

## TRAFFIC AND PEDESTRIAN CIRCULATION

*Traffic Circulation*

Both the north and south parcels (i.e., Phases 1 & 2) will utilize Caja del Oro Grant Road for primary access. In addition, the proposed two (2) access points for each parcel will align with each other.

Both access points exiting Caja del Oro Grant Road will have a stop condition. No stop condition is proposed on Caja del Oro Grant Road at the intersections to both parcels / phase lines.

Emergency access is offered from each parcel to the Alameda Frontage Road. Eric Wrage, PE, traffic engineer with Bohannan Huston Inc., has prepared a Traffic Impact Analysis Study (TIA) for full buildout of both phases of the proposed development.

The conclusion of the traffic study is that traffic generated by the project will have a minimal impact on adjacent roadway systems, with one (1) exception for a westbound left turn lane at Caja del Oro Grant Road and Alameda Frontage Road. All intersections that were evaluated will operate at acceptable levels of service.

The one exception is the PM Peak, left turn on Caja del Oro to Alameda where the peak traffic occurs. Additional right-of-way has been provided on Caja del Oro Grant Road to accommodate a right turn lane. The engineering for the additional lane at the Alameda Road intersection is provided in the engineering plans. This modification to the intersection brings the intersection into compliance with the City traffic engineering requirements for an acceptable level of service.

The engineered traffic study and supplemental traffic information which was reviewed and approved as part of the Preliminary Development Plan and Preliminary Subdivision Plat requests has been submitted under a separate cover and has been included in the overall application submittal documents.

*Pedestrian Circulation and Public Transportation*
There are currently no sidewalks on Caja del Oro Grant Road, nor along the Alameda Frontage Road. There is limited pedestrian access in this area of the city including along Agua Fria, which is the closest connecting road to Caja del Oro Grant Road.

Metropolitan Transportation Organization (MPO) mapping does not show any planned trails for this area that was recently annexed by the city.

The applicant had successfully worked with the Metropolitan Transportation Organization (MPO) to provide for a City trail on Alameda adjacent to the subject Caja del Oro aka Prado development.

At the moment there is no public bus route that serves the immediate area, and it appears none are planned for the future at this time.

However, there is an existing bus route located on Agua Fria and Caja del Oro Grant Road approximately 0.8 of a mile from the development. The need for additional bus routes / bus stops may change in the future With the completion of the Madera apartment which are currently under construction.

## FIRE PROTECTION

There is an existing twelve-inch (12") water line on South Meadows Road that terminates before the roundabout at NM 599 Frontage Road. This existing water line will be extended to the south boundary of the project and brought through the south parcel to Caja de Oro Grant Road and then extended to the eastern boundary of the subject property.

Furthermore, eight-inch (8") lines will be extended from the existing twelve-inch (12") line to serve fire protection purposes.

The location for existing and preliminary proposed locations fire hydrants are shown on the provided engineering plans, new fire hydrant locations / placements will need to be confirmed by the City of Santa Fe Fire Department / City Fire Marshal.

## UTILITIES

*Water*
As mentioned under Fire Protection a twelve-inch (12") city water line will be extended from South Meadows Road up to Caja de Oro Grant Road. The City Water Division has modeled the water demand for this project and surrounding area and has recommended the proper size and alignment for water service to the proposed development. Also, the twelve-inch (12") line will be available to serve future Santa Fe County properties along Caja de Oro Grant Road mentioned in the report that are currently served by on-site private wells.

*Sewer*
There is an existing city sewer line on Caja de Oro Grant Road east of the development. The development will connect to the existing eight-inch (8") sewer line located in Caja de Oro Grant

Road. Discussions have occurred with the City Wastewater Division, and they do not foresee any issues with the proposed connection to the existing sewer line on Caja de Oro Grant Road.

*Natural Gas*
There is an existing supply natural gas line in Caja de Oro Grant Road that currently serves the Agua Fria Fire & Rescue Station and Nancy Rodriguez Community Center. Final design for the gas line via the New Mexico Gas Company does not take place until the final subdivision plat is approved. It is assumed that a two-inch (2") line will be connected to the mainline in Caja de Oro Grant Road and will be extended as a new two-inch (2") gas line throughout the entire development for both phases.

There is an existing ten-inch (10") gas line that crosses the north end of the north parcel. This line has a fifty-foot (50') easement and all prosed residential dwellings are located outside said easement.

*Electric*
PNM overhead electric service is available on Caja de Oro Grant Road. Information on the capacity of this line and ability to serve the Subdivision cannot be determined at this time. However, there appears to be sufficient existing infrastructure available to serve the projected build-out of the subdivision. The final design of the electric system by PNM does not commence until the final plat is approved.

*Telephone*
Existing telephone cables are available on Caja del Oro Grant Road. Because the existing telephone cables are located within the urban service area of the City Santa Fe it is the responsibility of Century Link to bring in additional service lines at no cost to the development. Furthermore, Century Link is dependent on PNM Electric to establish the design for the communication system once a final plat has been approved.

*Comcast Cable*
Preliminary research concludes that fiber optics cabled are in the process of being installed for the length of Caja del Oro Grant Road. The design for cable from the fiber optics to the house is also dependent on the electric design from PNM to serve the project upon approval of a final plat.

## WATER BUDGET

Of the forty-four (44) lots / townhome units proposed Phase-2 of the project, thirty-four (34) of the units are market rate and subject to the transfer of approved water rights into the city's water bank.

All proposed lots in the development are less than 6,000 square feet in area. The water demand requirement is .15 acre-feet per dwelling unit, plus the first three years of landscape requirement and the .098 percent required for system line loss.

Total Water Usage Required for Phase-2 is as follows:

Usage per 34 dwellings x .15 ac. ft = 5.10 ac. ft.

Landscape Water Usage: 1.02 ac. ft.

Annual Water Usage: = 6.12 ac. ft. x 1.098 = 6.71 ac. ft.

Water rights instead of water credits are required since water demand for both phases of the project exceeds the city's 10-acre-foot maximum, where water credits can be used to offset the water requirements of the City Code.

## OPEN SPACE, PARK LAND & TRAILS

In addition to centralized ponding there are common areas in each of the two (2) parcels that are designed as landscape areas with trees, grass, and benches to meet the common open space requirements for each phase. These areas also serve to provide additional (more than required) off-street parking spaces for the development.

The requirement for neighborhood parks is .006 acre per dwelling. Eighty (80) dwellings requires 0.48 acres of park land. A total of 0.85 acres of park land is provided for this development via both phases 1 & 2.

The city does not accept park areas of less than one (1) acre in size for maintenance. The homeowner's association, therefore, will be responsible for maintenance of the park land and common open space area.

The development is proposing a significant number of interior trails for pedestrian circulation throughout the development. In addition, connection points are also proposed to the city trail system within the vicinity of the site. Easements for said trails / connections are shown and noted on the provided Final Plat for Phase-1 and Phase-2.

## TERRAIN MANAGEMENT AND EROSION CONTROL

A Storm Water Pollution Protection Plan (SWPPP) has been prepared and approved as part of the Phase-1 application / entitlement materials for the overall project.

A Notice of Intent (NOI) has also been submitted and approved by the Environmental Protection Agency (EPA) to authorize the commencement of the current grading taking place on-site.

The contractor for the project will be required to implement various Better Management Practice (BMP) measures to manage dust control throughout construction. Such mitigation measures to control dust will include, at a minimum, on-site water-truck watering disturbed areas during the grading of the site for infrastructure and building pad construction.

## PUBLIC SCHOOLS

The public schools that serve the district in which this project is located are listed below:

- El Camino Real Academy – 2500 South Meadows Road, Santa Fe NM 87507

- Capital High School – 4851 Paseo del Sol, Santa Fe NM 87507

Public Schools Report

A report was submitted to the Santa Fe Public Schools as provided for in the City Code. The response from Santa Fe Public Schools is enclosed in ***Appendix F*** of this report indicating capacity to absorb the students from this project into the public school system.

## SUBDIVISION COVENANTS

Section 14-8.2(K)(1) of the City Code requires that covenants and homeowners' association (HOA) documents be submitted for review to assure that each lot-owner understands the requirement to maintain landscape easements and storm water ponds, which remain under the ownership of the homeowner's association and are not required to be maintained by the City of Santa Fe.

Both Restrictive Covenants and HOA documents which includes the provisions to maintain commonly have been provided as part of the project application.

## COMPLIANCE WITH SANTA FE AFFORDABLE HOMES ORDINANCE

The Santa Fe Affordable Homes Ordinance requires that twenty-percent (20%) of the homes within a development must be constructed and made available to qualifying families based on mandated standards set forth in the Ordinance. A total of sixteen (16) affordable homes are required to satisfy city requirements. Therefore, sixteen (16) affordable homes will be provided per the breakdown below:

- Phase-1 = Six (6) Affordable Homes
- Phase-2 = Ten (10) Affordable Homes

Total Affordable Units for Development = Sixteen (16) Affordable Homes

The location of the proposed affordable units is depicted on the provided Final Development Plan. Also, the Santa Fe Affordable Homes Proposal can be found in ***Appendix G.***

## RESPONSE TO SUBDIVISION CRITERIA

Below are responses to the five (5) subdivision criteria set forth in 14-3.7(C) of the Santa Fe City Code.

Criteria:

1. *In all subdivisions, due regard shall be shown for all natural features such as vegetation, water courses, historical sites and structures, and similar community assets that, if preserved, will add attractiveness and value to the area or to Santa Fe.*

Response:

An archaeological report prepared by Ron Winters, Archaeologist, indicates that no historically significant sites exist within the tracts designated for consolidation within the development boundaries. The property contains only a few significant trees, with the predominant vegetation being native grasses and one-seed juniper trees. Additionally, there are no well-defined drainage ways on the property.

Criteria:

**2.** *The Planning Commission shall give due regard to the opinions of public agencies and shall not approve the plat if it determines that in the best interest of the public health, safety or welfare the land is not suitable for platting and development purposes of the kind proposed. Land subject to flooding and land deemed to be topographically unsuited for building, or for other reasons uninhabitable, shall not be platted for residential occupancy, or for other uses that may increase danger to health, safety or welfare or aggravate erosion or endangered by periodic or occasional inundation or produce unsatisfactory living conditions. See also Section 14-5.9 (Ecological Resource Protection overlay District) and Section 14-8.3 (Flood Regulations.)*

Response:

This land presents minimal constraints to development. Various city review agencies will provide comments on the construction plans submitted as part of the development review process following final plat approval. All conditions of approval and technical review comments must be addressed by city staff.

Dry utilities are available along Caja del Oro Grant Road, and the land is exceptionally flat, facilitating effective drainage management. With the exception of a gas easement at the northern end of the northern parcel, there are very few limitations to development. Access is provided via NM 599 Frontage Road, Alameda Frontage Road, and Caja del Oro Grant Road.

Sewer infrastructure is located nearby on Caja del Oro Grant Road and is capable of serving the development. A major water line will be constructed from off-site, meeting city requirements, and will become part of the city infrastructure upon completion and acceptance by city staff.

Criteria:

**3.** *All Plats shall comply with the standards of Chapter 14, Article 9 (Infrastructure Design, Improvements, and Dedications Standards).*

Response:

Every effort has been made to ensure that the proposed subdivision complies with Chapter 14, Article 9. The interior roadways are designed as public roads, and the city utility infrastructure is developed to meet the standards outlined in Article 9.

The City Water Division has modeled the domestic demand and fire-flow requirements for the subdivision. The main line serving the project is designed according to city specifications.

Preliminary discussions with city staff regarding wastewater services indicate that no issues or concerns are anticipated with connecting to the city's wastewater lines.

Criteria:

**4.** *A plat shall not be approved that creates a nonconformity or increases the extent or degree of an existing nonconformity with the provisions of Chapter 14 unless a variance is approved concurrently with the plat*

Response:

The proposed development is situated on vacant land with no existing nonconformities. The previously approved General Plan Amendment and Rezoning request to change the zoning from R-1 to R-10 aligns the density and design of the subdivision with Chapter 14 provisions. Additionally, no variances have been requested for this property to facilitate the proposed development.

Criteria:

**5.** *A plat shall not be approved that creates a nonconformity or increases the extent or degree of an existing nonconformity with applicable provisions of other chapters of the Santa Fe City Code unless an exception is approved pursuant to the procedures provided in that chapter prior to approval of the plat.*

Response:

The property has been successfully rezoned from R-1 to R-10, and C-2 to R-10, with approvals from the Governing Body, along with a General Plan Amendment. These changes ensure compliance with the procedures outlined in Chapter 14 of the city code and were done in conjunction with prior Final Development Plan and Preliminary and Final Plat Approvals associated with the subject Caja del Oro aka Prado two-phase development.

# WATER BUDGET CALCULATIONS

PHASE 2 LANDSCAPING

YEAR 1 AND YEAR 2
DRIP IRRIGATION TO TREES AND SHRUBS
4 MONTHS AT 1 RUN TIME PER MONTH
4 MONTHS AT 1 RUN TIME PER WEEK
4 MONTHS AT 4 RUN TIMES PER WEEK
APPROX. 90 RUN CYCLES PER YEAR
223 TREES = 1338 GALLONS PER RUN CYCLE
334 SHRUBS = 668 GALLONS PER RUN CYCLE
2006 GALLONS PER RUN CYCLE X 90 RUN TIMES = 180540 GPY / 0.55 ACRE FT.
TOTAL WATER USE PER YEAR = 180540.00 GPY / 0.55 ACRE FT.

YEAR 3 AND BEYOND
DRIP IRRIGATION TO TREES AND SHRUBS
4 MONTHS AT 1 RUN TIME PER MONTH
4 MONTHS AT 1 RUN TIME PER WEEK
4 MONTHS AT 3 RUN TIMES PER WEEK
APPROX. 77 RUN CYCLES PER YEAR
223 TREES = 1338 GALLONS PER RUN CYCLE
334 SHRUBS = 668 GALLONS PER RUN CYCLE
2006 GALLONS PER RUN CYCLE X .77 RUN TIMES = 154462 GPY / 0.47 ACRE FT.
TOTAL WATER USE PER YEAR = 154462.00 GPY / 0.47 ACRE FT.

NOTE: THIS WATER BUDGET IS APPROXIMATE AND IS TO BE USED AS A GUIDELINE AND ADJUSTED ACCORDING TO SITE CONDITIONS




## IRRIGATION NOTES

1. IRRIGATION SYSTEM STANDARDS OUTLINED IN SECTION 14-8.4(E) OF THE SFCC WATER HARVESTING AND IRRIGATION STANDARDS AND THE CITY OF SANTA FE LANDSCAPE IRRIGATION DESIGN STANDARDS SHALL BE STRICTLY ADHERED TO.
2. IRRIGATION SYSTEM HAS BEEN DESIGNED TO A MINIMUM DYNAMIC PRESSURE OF 75 PSI AT 50 GPM. IF THE PSI/GPM ARE LOWER THAN 75/50 THE LANDSCAPE ARCHITECT MUST BE NOTIFIED IMMEDIATELY.
3. TREES IN TURF AREA TO BE WATERED BY TURF SPRAY IRRIGATION. ALL OTHER NEW PLANTINGS TO BE WATERED BY AUTO DRIP IRRIGATION SYSTEM.
4. WATER MANAGEMENT AND THE MAINTENANCE OF THE IRRIGATION SYSTEM IS THE SOLE RESPONSIBILITY OF THE PROPERTY OWNER.
5. THE IRRIGATION SYSTEM SHALL BE CONNECTED TO CITY WATER. THE POINT OF CONNECTION SHALL CONSIST OF A WATER METER, BACKFLOW PREVENTOR, AND MASTER VALVE.
6. USE SIX 2 GPH EMITTERS PER EACH TREE AND TWO 2 GPH EMITTERS PER EACH SHRUB/GROUNDCOVER. USE SIX 2 GPH DRIP EMITTERS PER TREES IN POTS. IRRIGATION ZONES SHALL BE DESIGNED FOR TREES AND SHRUBS/GROUNDCOVERS.
7. INSTALL SLEEVES TWO SIZES LARGER THAN THE SLEEVED PIPE UNDER ALL HARD SURFACES.
8. THE BACKFLOW SIZE AND LOCATION IS ASSUMED ONLY, BASED ON THE LATEST AVAILABLE UTILITY PLAN. GENERAL CONTRACTOR TO PROVIDE THE IRRIGATION WATER STUB OUT AND ELECTRICITY FOR THE HOTBOX.
9. IRRIGATION EQUIPMENT IS SHOWN ON A LARGER SCALE FOR CLARITY. THE PIPE ROUTING ON THE PLAN IS SCHEMATIC AND MAY REQUIRE FIELD ADJUSTMENTS TO AVOID INSTALLING PIPE WITHIN THE ROOT ZONE OF PLANTS OR IN CONFLICT WITH UTILITY EASEMENTS.
10. ALL SLEEVES ARE ASSUMED TO BE PLACED PRIOR HARDSCAPE WITHOUT THE NEED OF BORING.
11. BACKFILL FOR TRENCHES SHALL BE CLEANED OF ALL ROCK AND DEBRIS.
12. MAINLINE & IRRIGATION EQUIPMENT IS SHOWN SCHEMATICALLY AS PLACED IN THE ROAD OR OUTSIDE OF THE LANDSCAPED AREAS FOR CLARITY ONLY. ALL MAINLINE, & IRRIGATION EQUIPMENT IS TO BE PLACED IN THE LANDSCAPE BEDS.

## VALVE SCHEDULE PH2

| NUMBER | MODEL | SIZE | TYPE | GPM | WATER USE |
|---|---|---|---|---|---|
| 1 | DRIP CONTROL VALVE - SHRUB | 1" | DRIP EMITTER | 4.8 | VL-L |
| 2 | DRIP CONTROL VALVE - TREE | 1" | DRIP EMITTER | 6.4 | L-M |
| 3 | DRIP CONTROL VALVE - SHRUB | 1" | DRIP EMITTER | 3.34 | VL-L |
| 4 | DRIP CONTROL VALVE - TREE | 1" | DRIP EMITTER | 6.6 | L-M |
| 5 | DRIP CONTROL VALVE - TREE | 1" | DRIP EMITTER | 3.8 | L-M |
| 6 | DRIP CONTROL VALVE - SHRUB | 1" | DRIP EMITTER | 4.94 | VL-L |
| 7 | DRIP CONTROL VALVE - TREE | 1" | DRIP EMITTER | 5.6 | L-M |
| 8 | DRIP CONTROL VALVE - TREE | 1" | DRIP EMITTER | 5 | L-M |
| 9 | DRIP CONTROL VALVE - SHRUB | 1" | DRIP EMITTER | 4.74 | VL-L |
| 10 | DRIP CONTROL VALVE - SHRUB | 1" | DRIP EMITTER | 2.8 | VL-L |
| 11 | DRIP CONTROL VALVE - TREE | 1" | DRIP EMITTER | 4.6 | L-M |
| 12 | DRIP CONTROL VALVE - TREE | 1" | DRIP EMITTER | 4.4 | L-M |
| 13 | DRIP CONTROL VALVE - SHRUB | 1" | DRIP EMITTER | 1.67 | VL-L |

## IRRIGATION SCHEDULE PH2

| SYMBOL | MANUFACTURER/MODEL/DESCRIPTION |
|---|---|
| | DRIP CONTROL VALVE - SHRUB<br>RAIN BIRD XCZ-100-PRF, MEDIUM FLOW DRIP CONTROL KIT, 1IN. DV VALVE, 1IN. PRESSURE REGULATING FILTER, 40PSI PRESSURE REGULATOR. 3 GPM-15 GPM. |
| | DRIP CONTROL VALVE - TREE<br>RAIN BIRD XCZ-100-PRF, MEDIUM FLOW DRIP CONTROL KIT, 1IN. DV VALVE, 1IN. PRESSURE REGULATING FILTER, 40PSI PRESSURE REGULATOR. 3 GPM-15 GPM. |
| | TRANSITION FITTING<br>PIPE TRANSITION POINT FROM PVC LATERAL TO DRIP TUBING WITH RISER IN 6IN. DRIP BOX. |
| F | FLUSH CAP<br>NDS CEP900 |
| | DRIP EMITTER - SHRUB<br>(2) RAINBIRD XB-20PC DRIP EMITTERS |
| | DRIP EMITTER - TREE<br>(6) RAINBIRD XB-20PC DRIP EMITTERS |

| SYMBOL | MANUFACTURER/MODEL/DESCRIPTION |
|---|---|
| | MAIN SHUT OFF VALVE<br>SPEARS SCH80 PVC COMPACT BALL VALVE |
| MV | MASTER VALVE 1"<br>RAIN BIRD PEB. 1IN., 1-1/2IN., 2IN. PLASTIC INDUSTRIAL MASTER VALVES. LOW FLOW OPERATING CAPABILITY, GLOBE CONFIGURATION. |
| MV2 | MASTER VALVE 1"<br>RAIN BIRD PEB. 1IN., 1-1/2IN., 2IN. PLASTIC INDUSTRIAL MASTER VALVES. LOW FLOW OPERATING CAPABILITY, GLOBE CONFIGURATION. |
| MV3 | MASTER VALVE 1"<br>RAIN BIRD PEB. 1IN., 1-1/2IN., 2IN. PLASTIC INDUSTRIAL MASTER VALVES. LOW FLOW OPERATING CAPABILITY, GLOBE CONFIGURATION. |
| BF | REDUCED PRESSURE BACKFLOW PREVENTER 1"<br>FEBCO 825Y |
| BF2 | REDUCED PRESSURE BACKFLOW PREVENTER 1"<br>FEBCO 825Y |
| BF3 | REDUCED PRESSURE BACKFLOW PREVENTER 1"<br>FEBCO 825Y |
| C | CONRTOLLER - RAIN BIRD ESP-LXD<br>50-200 STATION, 2-WIRE DECODER BASED CONTROLLER. (1) ESP-LXD 50-STATION, INDOOR/OUTDOOR, PLASTIC WALL-MOUNT ENCLOSURE. SYSTEM REQUIREMENTS: RAIN BIRD FD-XXX-TURF FIELD DECODERS, PAIGE ELECTRIC CABLE P7072D & RAIN BIRD WC20 DRY SPLICES ONLY. GROUND SYSTEM W/ (X) LSP-1TURF LINE SURGE PROTECTORS IN RAIN BIRD ROUND VALVE BOXES. INSTALL PER MANUFACTURERS RECOMMENDATIONS. |
| | IRRIGATION LATERAL LINE: PVC SCHEDULE 40 |
| | IRRIGATION LATERAL LINE: A940 DRIP POLYLINE |
| | IRRIGATION LATERAL LINE: A940RDS DRIP POLYLINE |
| | IRRIGATION MAINLINE: PVC SCHEDULE 40 |
| | PIPE SLEEVE: PVC CLASS 200 SDR 21 |


YELLOWSTONE LANDSCAPE
www.yellowstonelandscape.com
PO Box 10597
Albuquerque, NM 87184
505.898.9615
design@yellowstonelandscape. com


STATE OF NEW MEXICO
CODY McNALLEN
850
REGISTERED LANDSCAPE ARCHITECT
9/3/24

Date: 08.19.2024
Revisions:
09.03.2024
Drawn by: PL
Reviewed by: CM

# CAJA DEL ORO Ph2

Santa Fe, NM

NORTH

Scale: 1" = 60'

30 0 60 120

Sheet Title:
Irrigation Plan

Sheet Number:
LI-00

Z:\Drawings\PROJECTS\2024\ - ACTIVE JOBS\Caja del Oro\Ph - CAD\Caja Del Oro_Irrigation Plan_2024.09.03.dwg, 9/3/2024 4:29:13 PM, CWC To PDF.pc3




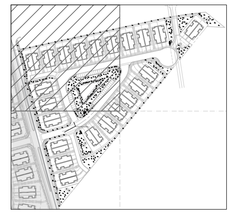

## IRRIGATION SCHEDULE PH2

| SYMBOL | MANUFACTURER/MODEL/DESCRIPTION |
|---|---|
| | DRIP CONTROL VALVE - SHRUB<br>RAIN BIRD XCZ-100-PRF, MEDIUM FLOW DRIP CONTROL KIT, 1IN. DV VALVE, 1IN. PRESSURE REGULATING FILTER, 40PSI PRESSURE REGULATOR. 3 GPM-15 GPM. |
| | DRIP CONTROL VALVE - TREE<br>RAIN BIRD XCZ-100-PRF, MEDIUM FLOW DRIP CONTROL KIT, 1IN. DV VALVE, 1IN. PRESSURE REGULATING FILTER, 40PSI PRESSURE REGULATOR. 3 GPM-15 GPM. |
| | TRANSITION FITTING<br>PIPE TRANSITION POINT FROM PVC LATERAL TO DRIP TUBING WITH RISER IN 6IN. DRIP BOX. |
| F | FLUSH CAP<br>NDS CEP900 |
| | DRIP EMITTER - SHRUB<br>(2) RAINBIRD XB-20PC DRIP EMITTERS |
| | DRIP EMITTER - TREE<br>(6) RAINBIRD XB-20PC DRIP EMITTERS |

| SYMBOL | MANUFACTURER/MODEL/DESCRIPTION |
|---|---|
| | MAIN SHUT OFF VALVE<br>SPEARS SCH80 PVC COMPACT BALL VALVE |
| MV | MASTER VALVE 1"<br>RAIN BIRD PEB. 1IN., 1-1/2IN., 2IN. PLASTIC INDUSTRIAL MASTER VALVES. LOW FLOW OPERATING CAPABILITY, GLOBE CONFIGURATION. |
| MV2 | MASTER VALVE 1"<br>RAIN BIRD PEB. 1IN., 1-1/2IN., 2IN. PLASTIC INDUSTRIAL MASTER VALVES. LOW FLOW OPERATING CAPABILITY, GLOBE CONFIGURATION. |
| MV3 | MASTER VALVE 1"<br>RAIN BIRD PEB. 1IN., 1-1/2IN., 2IN. PLASTIC INDUSTRIAL MASTER VALVES. LOW FLOW OPERATING CAPABILITY, GLOBE CONFIGURATION. |
| BF | REDUCED PRESSURE BACKFLOW PREVENTER 1"<br>FEBCO 825Y |
| BF2 | REDUCED PRESSURE BACKFLOW PREVENTER 1"<br>FEBCO 825Y |
| BF3 | REDUCED PRESSURE BACKFLOW PREVENTER 1"<br>FEBCO 825Y |
| C | CONRTOLLER - RAIN BIRD ESP-LXD<br>50-200 STATION, 2-WIRE DECODER BASED CONTROLLER. (1) ESP-LXD 50-STATION, INDOOR/OUTDOOR, PLASTIC WALL-MOUNT ENCLOSURE. SYSTEM REQUIREMENTS: RAIN BIRD FD-XXX-TURF FIELD DECODERS, PAIGE ELECTRIC CABLE P7072D & RAIN BIRD WC20 DRY SPLICES ONLY. GROUND SYSTEM W/ (X) LSP-1TURF LINE SURGE PROTECTORS IN RAIN BIRD ROUND VALVE BOXES. INSTALL PER MANUFACTURERS RECOMMENDATIONS. |
| | IRRIGATION LATERAL LINE: PVC SCHEDULE 40 |
| | IRRIGATION LATERAL LINE: A940 DRIP POLYLINE |
| | IRRIGATION LATERAL LINE: A940RDS DRIP POLYLINE |
| | IRRIGATION MAINLINE: PVC SCHEDULE 40 |
| | PIPE SLEEVE: PVC CLASS 200 SDR 21 |


YELLOWSTONE LANDSCAPE
www.yellowstonelandscape.com
PO Box 10597
Albuquerque, NM 87184
505.898.9615
design@yellowstonelandscape. com


STATE OF NEW MEXICO
CODY McNALLEN
650
REGISTERED LANDSCAPE ARCHITECT
9/3/24

Date: 08.19.2024
Revisions:
09.03.2024

Drawn by: PL
Reviewed by: CM

# CAJA DEL ORO
Ph2
Santa Fe, NM

NORTH

Scale: 1" = 20'
10 0 20 40

Sheet Title:
Irrigation Plan

Sheet Number:
LI-01






## IRRIGATION SCHEDULE PH2

| SYMBOL | MANUFACTURER/MODEL/DESCRIPTION |
|---|---|
| | DRIP CONTROL VALVE - SHRUB<br>RAIN BIRD XCZ-100-PRF, MEDIUM FLOW DRIP CONTROL KIT, 1IN. DV VALVE, 1IN. PRESSURE REGULATING FILTER, 40PSI PRESSURE REGULATOR. 3 GPM-15 GPM. |
| | DRIP CONTROL VALVE - TREE<br>RAIN BIRD XCZ-100-PRF, MEDIUM FLOW DRIP CONTROL KIT, 1IN. DV VALVE, 1IN. PRESSURE REGULATING FILTER, 40PSI PRESSURE REGULATOR. 3 GPM-15 GPM. |
| | TRANSITION FITTING<br>PIPE TRANSITION POINT FROM PVC LATERAL TO DRIP TUBING WITH RISER IN 6IN. DRIP BOX. |
| F | FLUSH CAP<br>NDS CEP900 |
| | DRIP EMITTER - SHRUB<br>(2) RAINBIRD XB-20PC DRIP EMITTERS |
| | DRIP EMITTER - TREE<br>(6) RAINBIRD XB-20PC DRIP EMITTERS |

| SYMBOL | MANUFACTURER/MODEL/DESCRIPTION |
|---|---|
| | MAIN SHUT OFF VALVE<br>SPEARS SCH80 PVC COMPACT BALL VALVE |
| MV | MASTER VALVE 1"<br>RAIN BIRD PEB. 1IN., 1-1/2IN., 2IN. PLASTIC INDUSTRIAL MASTER VALVES. LOW FLOW OPERATING CAPABILITY, GLOBE CONFIGURATION. |
| MV2 | MASTER VALVE 1"<br>RAIN BIRD PEB. 1IN., 1-1/2IN., 2IN. PLASTIC INDUSTRIAL MASTER VALVES. LOW FLOW OPERATING CAPABILITY, GLOBE CONFIGURATION. |
| MV3 | MASTER VALVE 1"<br>RAIN BIRD PEB. 1IN., 1-1/2IN., 2IN. PLASTIC INDUSTRIAL MASTER VALVES. LOW FLOW OPERATING CAPABILITY, GLOBE CONFIGURATION. |
| BF | REDUCED PRESSURE BACKFLOW PREVENTER 1"<br>FEBCO 825Y |
| BF2 | REDUCED PRESSURE BACKFLOW PREVENTER 1"<br>FEBCO 825Y |
| BF3 | REDUCED PRESSURE BACKFLOW PREVENTER 1"<br>FEBCO 825Y |
| C | CONRTOLLER - RAIN BIRD ESP-LXD<br>50-200 STATION, 2-WIRE DECODER BASED CONTROLLER. (1) ESP-LXD 50-STATION, INDOOR/OUTDOOR, PLASTIC WALL-MOUNT ENCLOSURE. SYSTEM REQUIREMENTS: RAIN BIRD FD-XXX-TURF FIELD DECODERS, PAIGE ELECTRIC CABLE P7072D & RAIN BIRD WC20 DRY SPLICES ONLY. GROUND SYSTEM W/ (X) LSP-1TURF LINE SURGE PROTECTORS IN RAIN BIRD ROUND VALVE BOXES. INSTALL PER MANUFACTURERS RECOMMENDATIONS. |
| | IRRIGATION LATERAL LINE: PVC SCHEDULE 40 |
| | IRRIGATION LATERAL LINE: A940 DRIP POLYLINE |
| | IRRIGATION LATERAL LINE: A940RDS DRIP POLYLINE |
| | IRRIGATION MAINLINE: PVC SCHEDULE 40 |
| | PIPE SLEEVE: PVC CLASS 200 SDR 21 |


YELLOWSTONE LANDSCAPE
www.yellowstonelandscape.com
PO Box 10597
Albuquerque, NM 87184
505.898.9615
design@yellowstonelandscape. com


STATE OF NEW MEXICO
CODY McNALLEN
650
REGISTERED LANDSCAPE ARCHITECT
9/3/24

Date: 08.19.2024
Revisions:
09.03.2024

Drawn by: PL
Reviewed by: CM

# CAJA DEL ORO Ph2

Santa Fe, NM

NORTH

Scale: 1" = 20'

10 0 20 40

Sheet Title:
Irrigation Plan

Sheet Number:
LI-02

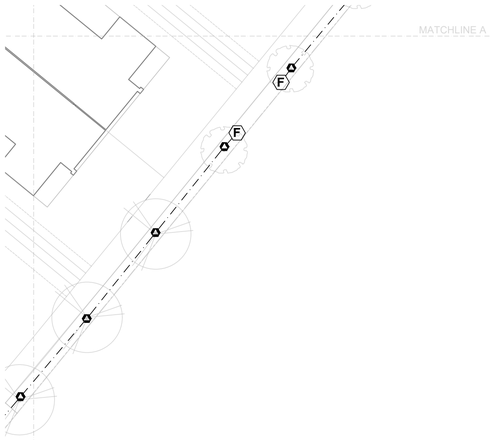


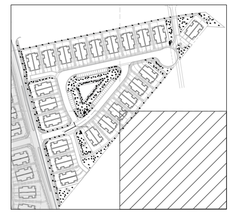

YELLOWSTONE
LANDSCAPE
www.yellowstonelandscape.com
PO Box 10597
Albuquerque, NM 87184
505.898.9615
design@yellowstonelandscape. com

STATE OF NEW MEXICO
CODY McNALLEN
650
REGISTERED LANDSCAPE ARCHITECT
9/3/24

Date: 08.19.2024
Revisions:
09.03.2024

Drawn by: PL
Reviewed by: CM

## IRRIGATION SCHEDULE PH2

| SYMBOL | MANUFACTURER/MODEL/DESCRIPTION |
|---|---|
| | DRIP CONTROL VALVE - SHRUB<br>RAIN BIRD XCZ-100-PRF, MEDIUM FLOW DRIP CONTROL KIT, 1IN. DV VALVE, 1IN. PRESSURE REGULATING FILTER, 40PSI PRESSURE REGULATOR. 3 GPM-15 GPM. |
| | DRIP CONTROL VALVE - TREE<br>RAIN BIRD XCZ-100-PRF, MEDIUM FLOW DRIP CONTROL KIT, 1IN. DV VALVE, 1IN. PRESSURE REGULATING FILTER, 40PSI PRESSURE REGULATOR. 3 GPM-15 GPM. |
| | TRANSITION FITTING<br>PIPE TRANSITION POINT FROM PVC LATERAL TO DRIP TUBING WITH RISER IN 6IN. DRIP BOX. |
| F | FLUSH CAP<br>NDS CEP900 |
| | DRIP EMITTER - SHRUB<br>(2) RAINBIRD XB-20PC DRIP EMITTERS |
| | DRIP EMITTER - TREE<br>(6) RAINBIRD XB-20PC DRIP EMITTERS |

| SYMBOL | MANUFACTURER/MODEL/DESCRIPTION |
|---|---|
| | MAIN SHUT OFF VALVE<br>SPEARS SCH80 PVC COMPACT BALL VALVE |
| MV | MASTER VALVE 1"<br>RAIN BIRD PEB. 1IN., 1-1/2IN., 2IN. PLASTIC INDUSTRIAL MASTER VALVES. LOW FLOW OPERATING CAPABILITY, GLOBE CONFIGURATION. |
| MV2 | MASTER VALVE 1"<br>RAIN BIRD PEB. 1IN., 1-1/2IN., 2IN. PLASTIC INDUSTRIAL MASTER VALVES. LOW FLOW OPERATING CAPABILITY, GLOBE CONFIGURATION. |
| MV3 | MASTER VALVE 1"<br>RAIN BIRD PEB. 1IN., 1-1/2IN., 2IN. PLASTIC INDUSTRIAL MASTER VALVES. LOW FLOW OPERATING CAPABILITY, GLOBE CONFIGURATION. |
| BF | REDUCED PRESSURE BACKFLOW PREVENTER 1"<br>FEBCO 825Y |
| BF2 | REDUCED PRESSURE BACKFLOW PREVENTER 1"<br>FEBCO 825Y |
| BF3 | REDUCED PRESSURE BACKFLOW PREVENTER 1"<br>FEBCO 825Y |
| C | CONRTOLLER - RAIN BIRD ESP-LXD<br>50-200 STATION, 2-WIRE DECODER BASED CONTROLLER. (1) ESP-LXD 50-STATION, INDOOR/OUTDOOR, PLASTIC WALL-MOUNT ENCLOSURE. SYSTEM REQUIREMENTS: RAIN BIRD FD-XXX-TURF FIELD DECODERS, PAIGE ELECTRIC CABLE P7072D & RAIN BIRD WC20 DRY SPLICES ONLY. GROUND SYSTEM W/ (X) LSP-1TURF LINE SURGE PROTECTORS IN RAIN BIRD ROUND VALVE BOXES. INSTALL PER MANUFACTURERS RECOMMENDATIONS. |
| | IRRIGATION LATERAL LINE: PVC SCHEDULE 40 |
| | IRRIGATION LATERAL LINE: A940 DRIP POLYLINE |
| | IRRIGATION LATERAL LINE: A940RDS DRIP POLYLINE |
| | IRRIGATION MAINLINE: PVC SCHEDULE 40 |
| | PIPE SLEEVE: PVC CLASS 200 SDR 21 |

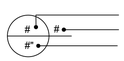


# CAJA DEL ORO
## Ph2
Santa Fe, NM



NORTH

Scale: 1" = 20'

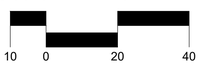


Sheet Title:
Irrigation Plan

Sheet Number:
LI-03




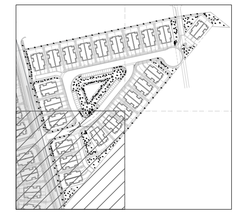

## IRRIGATION SCHEDULE PH2

| SYMBOL | MANUFACTURER/MODEL/DESCRIPTION |
|---|---|
| | DRIP CONTROL VALVE - SHRUB<br>RAIN BIRD XCZ-100-PRF, MEDIUM FLOW DRIP CONTROL KIT, 1IN. DV VALVE, 1IN. PRESSURE REGULATING FILTER, 40PSI PRESSURE REGULATOR. 3 GPM-15 GPM. |
| | DRIP CONTROL VALVE - TREE<br>RAIN BIRD XCZ-100-PRF, MEDIUM FLOW DRIP CONTROL KIT, 1IN. DV VALVE, 1IN. PRESSURE REGULATING FILTER, 40PSI PRESSURE REGULATOR. 3 GPM-15 GPM. |
| | TRANSITION FITTING<br>PIPE TRANSITION POINT FROM PVC LATERAL TO DRIP TUBING WITH RISER IN 6IN. DRIP BOX. |
| F | FLUSH CAP<br>NDS CEP900 |
| | DRIP EMITTER - SHRUB<br>(2) RAINBIRD XB-20PC DRIP EMITTERS |
| | DRIP EMITTER - TREE<br>(6) RAINBIRD XB-20PC DRIP EMITTERS |

| SYMBOL | MANUFACTURER/MODEL/DESCRIPTION |
|---|---|
| | MAIN SHUT OFF VALVE<br>SPEARS SCH80 PVC COMPACT BALL VALVE |
| MV | MASTER VALVE 1"<br>RAIN BIRD PEB. 1IN., 1-1/2IN., 2IN. PLASTIC INDUSTRIAL MASTER VALVES. LOW FLOW OPERATING CAPABILITY, GLOBE CONFIGURATION. |
| MV2 | MASTER VALVE 1"<br>RAIN BIRD PEB. 1IN., 1-1/2IN., 2IN. PLASTIC INDUSTRIAL MASTER VALVES. LOW FLOW OPERATING CAPABILITY, GLOBE CONFIGURATION. |
| MV3 | MASTER VALVE 1"<br>RAIN BIRD PEB. 1IN., 1-1/2IN., 2IN. PLASTIC INDUSTRIAL MASTER VALVES. LOW FLOW OPERATING CAPABILITY, GLOBE CONFIGURATION. |
| BF | REDUCED PRESSURE BACKFLOW PREVENTER 1"<br>FEBCO 825Y |
| BF2 | REDUCED PRESSURE BACKFLOW PREVENTER 1"<br>FEBCO 825Y |
| BF3 | REDUCED PRESSURE BACKFLOW PREVENTER 1"<br>FEBCO 825Y |
| C | CONRTOLLER - RAIN BIRD ESP-LXD<br>50-200 STATION, 2-WIRE DECODER BASED CONTROLLER. (1) ESP-LXD 50-STATION, INDOOR/OUTDOOR, PLASTIC WALL-MOUNT ENCLOSURE. SYSTEM REQUIREMENTS: RAIN BIRD FD-XXX-TURF FIELD DECODERS, PAIGE ELECTRIC CABLE P7072D & RAIN BIRD WC20 DRY SPLICES ONLY. GROUND SYSTEM W/ (X) LSP-1TURF LINE SURGE PROTECTORS IN RAIN BIRD ROUND VALVE BOXES. INSTALL PER MANUFACTURERS RECOMMENDATIONS. |
| | IRRIGATION LATERAL LINE: PVC SCHEDULE 40 |
| | IRRIGATION LATERAL LINE: A940 DRIP POLYLINE |
| | IRRIGATION LATERAL LINE: A940RDS DRIP POLYLINE |
| | IRRIGATION MAINLINE: PVC SCHEDULE 40 |
| | PIPE SLEEVE: PVC CLASS 200 SDR 21 |


YELLOWSTONE LANDSCAPE
www.yellowstonelandscape.com
PO Box 10597
Albuquerque, NM 87184
505.898.9615
design@yellowstonelandscape. com


STATE OF NEW MEXICO
CODY McNALLEN
650
REGISTERED LANDSCAPE ARCHITECT
9/3/24

Date: 08.19.2024
Revisions:
09.03.2024

Drawn by: PL
Reviewed by: CM

# CAJA DEL ORO Ph2

Santa Fe, NM

NORTH

Scale: 1" = 20'

10 0 20 40

Sheet Title:
Irrigation Plan

Sheet Number:
LI-04

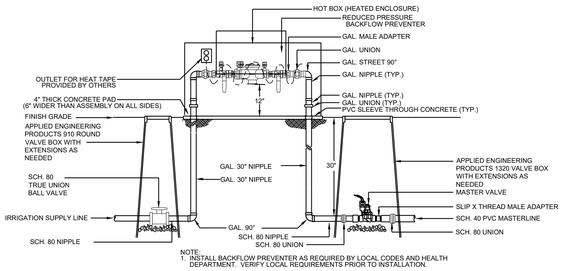


## 1 RP BACKFLOW/MASTER VALVE DETAIL

N.T.S.

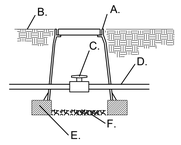


A. APPLIED ENGINEERING PRODUCTS 910 ROUND VALVE BOX WITH EXTENSIONS AS NEEDED
B. FINISH GRADE
C. SCH. 80 UTILITY BALL VALVE
D. MAINLINE/24" BURY
E. 8" X 8" X 16" CMU CONCRETE BLOCK
F. 4" LAYER OF 3/4" GRAVEL

## 2 MAINLINE ISOLATION VALVE DETAIL

N.T.S.

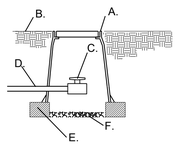


A. APPLIED ENGINEERING PRODUCTS 910 ROUND VALVE BOX WITH EXTENSIONS AS NEEDED
B. FINISH GRADE
C. SCH. 80 UTILITY BALL VALVE
D. MAINLINE/24" BURY
E. 8" X 8" X 16" CMU CONCRETE BLOCK
F. 3/4" GRAVEL SUMP UNDER MANUAL DRAIN TO BE A MINIMUM OF 12" DEEP

## 3 MANUAL DRAIN VALVE DETAIL

N.T.S.

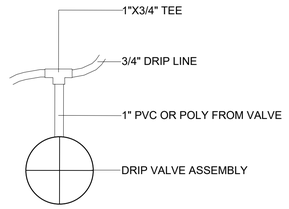


## 4 DRIP VALVE DETAIL

N.T.S.

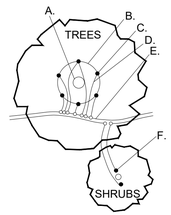


A. TREE TRUNK/ ROOT CROWN
B. 24" CIRCLE FROM TRUNK
C. EMITTERS
D. 1/4" DISTRIBUTION LINE
E. 3/4" POLYETHYLENE DRIPLINE
F. EMITTER PLACED AT THE EDGE OF THE ROOT BALL

NOTE: INSTALL EMITTERS ABOVE THE ROOT BALL IF PLANT IS INSTALLED ON A SLOPE.

## 5 EMITTER PLACEMENT DETAIL

N.T.S.

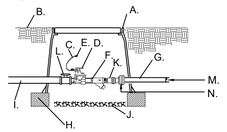


A. APPLIED ENGINEERING PRODUCTS 1320 VALVE BOX WITH EXTENSIONS AS NEEDED
B. FINISH GRADE
C. 24" WIRE LOOP
D. AUTOMATIC VALVE SEE IRRIGATION LEGEND.
E. DRY SPLICE CONNECTOR OR EQUAL
F. "WYE" STRAINER STRAINER SHALL BE INSTALLED TO PROVIDE ACCESS FOR MAINTENANCE AND REPLACEMENT OF FILTER
G. LATERAL LINE/24" BURY
H. 8" X 8" X 16" CMU CONCRETE BLOCK
I. MASTERLINE/24" BURY
J. 4" LAYER OF 3/4" GRAVEL
K. PRESSURE REGULATOR
L. SCH. 80 TRUE UNION BALL VALVE
M. SCH. 40 PVC LATERAL LINE
N. SCH. 80 UNION

## 6 DRIP VALVE WITH FILTER & PRESSURE REGULATOR

N.T.S.

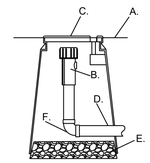


A. FINISH GRADE
B. END FLUSH CAP
C. 6" ROUND BOX WITH LID
D. 3/4" POLY DRIP PIPE
E. 2" DEPTH OF GRAVEL
F. 90° FITTING

## 7 END FLUSH CAP

N.T.S.

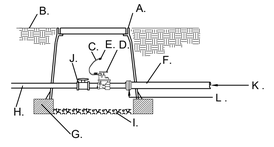


A. APPLIED ENGINEERING PRODUCTS 1320 VALVE BOX WITH EXTENSIONS AS NEEDED
B. FINISH GRADE
C. 24" WIRE LOOP
D. AUTOMATIC VALVE- SEE IRRIGATION LEGEND.
E. DRY SPLICE CONNECTOR OR EQUAL
F. LATERAL LINE/24" BURY
G. 8" X 8" X 16" CMU CONCRETE BLOCK
H. MASTERLINE/24" BURY
I. 4" LAYER OF 3/4" GRAVEL
J. SCH. 80 TRUE UNION BALL VALVE
K. SCH. 40 PVC LATERAL LINE
L. SCH. 80 UNION

## 8 AUTOMATIC VALVE

N.T.S.

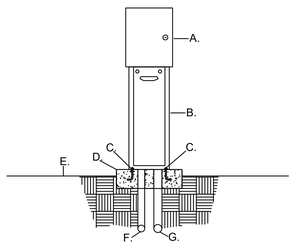


A. AUTOMATIC CONTROLLER, SEE IRRIGATION LEGEND
B. PEDESTAL (SAME AS CONTROLLER MANUFACTURER)
C. 1/2' X 6" ANCHOR BOLTS, FOUR PER PEDESTAL
D. 3000 PSI CONCRETE PAD - 18" X 24" X 8" THICK
E. FINISH GRADE
F. 3/4" RIGID PVC SWEEP ELL (120 VOLT WIRE)
G. 2" RIGID PVC SWEEP ELL (24 VOLT WIRE)

## 9 AUTOMATIC CONTROLLER

N.T.S.

## IRRIGATION NOTES

1. IRRIGATION SYSTEM STANDARDS OUTLINED IN SECTION 14-8.4(E) OF THE SFCC WATER HARVESTING AND IRRIGATION STANDARDS AND THE CITY OF SANTA FE LANDSCAPE IRRIGATION DESIGN STANDARDS SHALL BE STRICTLY ADHERED TO.
2. IRRIGATION SYSTEM HAS BEEN DESIGNED TO A MINIMUM DYNAMIC PRESSURE OF 75 PSI AT 50 GPM. IF THE PSI/GPM ARE LOWER THAN 75/50 THE LANDSCAPE ARCHITECT MUST BE NOTIFIED IMMEDIATELY.
3. TREES IN TURF AREA TO BE WATERED BY TURF SPRAY IRRIGATION. ALL OTHER NEW PLANTINGS TO BE WATERED BY AUTO DRIP IRRIGATION SYSTEM.
4. WATER MANAGEMENT AND THE MAINTENANCE OF THE IRRIGATION SYSTEM IS THE SOLE RESPONSIBILITY OF THE PROPERTY OWNER.
5. THE IRRIGATION SYSTEM SHALL BE CONNECTED TO CITY WATER. THE POINT OF CONNECTION SHALL CONSIST OF A WATER METER, BACKFLOW PREVENTOR, AND MASTER VALVE.
6. USE SIX 2 GPH EMITTERS PER EACH TREE AND TWO 2 GPH EMITTERS PER EACH SHRUB/GROUNDCOVER. USE SIX 2 GPH DRIP EMITTERS PER TREES IN POTS. IRRIGATION ZONES SHALL BE DESIGNED FOR TREES AND SHRUBS/GROUNDCOVERS.
7. INSTALL SLEEVES TWO SIZES LARGER THAN THE SLEEVED PIPE UNDER ALL HARD SURFACES.
8. THE BACKFLOW SIZE AND LOCATION IS ASSUMED ONLY, BASED ON THE LATEST AVAILABLE UTILITY PLAN. GENERAL CONTRACTOR TO PROVIDE THE IRRIGATION WATER STUB OUT AND ELECTRICITY FOR THE HOTBOX.
9. IRRIGATION EQUIPMENT IS SHOWN ON A LARGER SCALE FOR CLARITY. THE PIPE ROUTING ON THE PLAN IS SCHEMATIC AND MAY REQUIRE FIELD ADJUSTMENTS TO AVOID INSTALLING PIPE WITHIN THE ROOT ZONE OF PLANTS OR IN CONFLICT WITH UTILITY EASEMENTS.
10. ALL SLEEVES ARE ASSUMED TO BE PLACED PRIOR HARDSCAPE WITHOUT THE NEED OF BORING.
11. BACKFILL FOR TRENCHES SHALL BE CLEANED OF ALL ROCK AND DEBRIS.
12. MAINLINE & IRRIGATION EQUIPMENT IS SHOWN SCHEMATICALLY AS PLACED IN THE ROAD OR OUTSIDE OF THE LANDSCAPED AREAS FOR CLARITY ONLY. ALL MAINLINE, & IRRIGATION EQUIPMENT IS TO BE PLACED IN THE LANDSCAPE BEDS.

## WATER BUDGET CALCULATIONS

PHASE 2 LANDSCAPING

YEAR 1 AND YEAR 2
DRIP IRRIGATION TO TREES AND SHRUBS
4 MONTHS AT 1 RUN TIME PER MONTH
4 MONTHS AT 1 RUN TIME PER WEEK
4 MONTHS AT 4 RUN TIMES PER WEEK
APPROX. 90 RUN CYCLES PER YEAR

| | | | | | | | | |
|---|---|---|---|---|---|---|---|---|
| 223 | TREES | = | 1338 | GALLONS PER RUN CYCLE | | | | |
| 334 | SHRUBS | = | 668 | GALLONS PER RUN CYCLE | | | | |
| 2006 | GALLONS PER RUN CYCLE X 90 RUN TIMES | = | 180540 | GPY | / | 0.55 | ACRE FT. | |
| TOTAL WATER USE PER YEAR | | = | 180540.00 | GPY | / | 0.55 | ACRE FT. | |

YEAR 3 AND BEYOND
DRIP IRRIGATION TO TREES AND SHRUBS
4 MONTHS AT 1 RUN TIME PER MONTH
4 MONTHS AT 1 RUN TIME PER WEEK
4 MONTHS AT 3 RUN TIMES PER WEEK
APPROX. 77 RUN CYCLES PER YEAR

| | | | | | | | | |
|---|---|---|---|---|---|---|---|---|
| 223 | TREES | = | 1338 | GALLONS PER RUN CYCLE | | | | |
| 334 | SHRUBS | = | 668 | GALLONS PER RUN CYCLE | | | | |
| 2006 | GALLONS PER RUN CYCLE X .77 RUN TIMES | = | 154462 | GPY | / | 0.47 | ACRE FT. | |
| TOTAL WATER USE PER YEAR | | = | 154462.00 | GPY | / | 0.47 | ACRE FT. | |

NOTE: THIS WATER BUDGET IS APPROXIMATE AND IS TO BE USED AS A GUIDELINE AND ADJUSTED ACCORDING TO SITE CONDITIONS

## VALVE SCHEDULE PH2

| NUMBER | MODEL | SIZE | TYPE | GPM | WATER USE |
|---|---|---|---|---|---|
| 1 | DRIP CONTROL VALVE - SHRUB | 1" | DRIP EMITTER | 4.8 | VL-L |
| 2 | DRIP CONTROL VALVE - TREE | 1" | DRIP EMITTER | 6.4 | L-M |
| 3 | DRIP CONTROL VALVE - SHRUB | 1" | DRIP EMITTER | 3.34 | VL-L |
| 4 | DRIP CONTROL VALVE - TREE | 1" | DRIP EMITTER | 6.6 | L-M |
| 5 | DRIP CONTROL VALVE - TREE | 1" | DRIP EMITTER | 3.8 | L-M |
| 6 | DRIP CONTROL VALVE - SHRUB | 1" | DRIP EMITTER | 4.94 | VL-L |
| 7 | DRIP CONTROL VALVE - TREE | 1" | DRIP EMITTER | 5.6 | L-M |
| 8 | DRIP CONTROL VALVE - TREE | 1" | DRIP EMITTER | 5 | L-M |
| 9 | DRIP CONTROL VALVE - SHRUB | 1" | DRIP EMITTER | 4.74 | VL-L |
| 10 | DRIP CONTROL VALVE - SHRUB | 1" | DRIP EMITTER | 2.8 | VL-L |
| 11 | DRIP CONTROL VALVE - TREE | 1" | DRIP EMITTER | 4.6 | L-M |
| 12 | DRIP CONTROL VALVE - TREE | 1" | DRIP EMITTER | 4.4 | L-M |
| 13 | DRIP CONTROL VALVE - SHRUB | 1" | DRIP EMITTER | 1.67 | VL-L |

YELLOWSTONE LANDSCAPE
www.yellowstonelandscape.com
PO Box 10597
Albuquerque, NM 87184
505.898.9615
design@yellowstonelandscape. com

STATE OF NEW MEXICO
CODY McNALLEN
850
REGISTERED LANDSCAPE ARCHITECT
9/3/24

Date: 08.19.2024
Revisions:
09.03.2024

Drawn by: PL
Reviewed by: CM

CAJA DEL ORO Ph2
Santa Fe, NM

NORTH

Scale:
0

Sheet Title:
Irrigation Details

Sheet Number:
LI-05

Z:\Drawn\PROJECTS\SOA - TRANSFER\ - ACTIVE JOBS\Caja del Oro\Ph - CAD\Caja Del Oro_Irrigation Plan_2024\09.03.dwg, 9/3/2024 4:43:39 PM, CWC To PDF.pc3

## WATER BUDGET CALCULATIONS

PHASE 2 LANDSCAPING

YEAR 1 AND YEAR 2
DRIP IRRIGATION TO TREES AND SHRUBS
4 MONTHS AT 1 RUN TIME PER MONTH
4 MONTHS AT 1 RUN TIME PER WEEK
4 MONTHS AT 4 RUN TIMES PER WEEK
APPROX. 90 RUN CYCLES PER YEAR

| | | | | | | | |
|---|---|---|---|---|---|---|---|
| 223 | TREES | = | 1338 | GALLONS PER RUN CYCLE | | | |
| 334 | SHRUBS | = | 668 | GALLONS PER RUN CYCLE | | | |
| 2006 | GALLONS PER RUN CYCLE X 90 RUN TIMES | = | 180540 | GPY | / | 0.55 | ACRE FT. |
| TOTAL WATER USE PER YEAR | | = | 180540.00 | GPY | / | 0.55 | ACRE FT. |

YEAR 3 AND BEYOND
DRIP IRRIGATION TO TREES AND SHRUBS
4 MONTHS AT 1 RUN TIME PER MONTH
4 MONTHS AT 1 RUN TIME PER WEEK
4 MONTHS AT 3 RUN TIMES PER WEEK
APPROX. 77 RUN CYCLES PER YEAR

| | | | | | | | |
|---|---|---|---|---|---|---|---|
| 223 | TREES | = | 1338 | GALLONS PER RUN CYCLE | | | |
| 334 | SHRUBS | = | 668 | GALLONS PER RUN CYCLE | | | |
| 2006 | GALLONS PER RUN CYCLE X .77 RUN TIMES | = | 154462 | GPY | / | 0.47 | ACRE FT. |
| TOTAL WATER USE PER YEAR | | = | 154462.00 | GPY | / | 0.47 | ACRE FT. |

NOTE: THIS WATER BUDGET IS APPROXIMATE AND IS TO BE USED AS A GUIDELINE AND ADJUSTED ACCORDING TO SITE CONDITIONS







1 WATER LEVEL MEASURING DEVICE NTS

## LANDSCAPE NOTES

1. PLANTING AREAS TO BE MULCHED WITH GRAVEL AT 2-3" OVER FILTER FABRIC.
2. ALL MULCH TO BE 2" BELOW ADJACENT SIDEWALK OR CURB.
3. PLANTS TO BE IRRIGATED WITH AUTOMATIC DRIP IRRIGATION SYSTEM PROTECTED WITH BACKFLOW PREVENTION DEVICE (SEE DETAILS).
4. EXISTING LANDSCAPE AREAS OUTSIDE PROJECT AREA TO BE PROTECTED DURING CONSTRUCTION.
5. STREET TREES PROVIDED AT APPROX. 30' ON CENTER.
6. PROPOSED COOL SEASON SOD AREA WILL BE FOR RECREATIONAL USE. SOD USED WILL BE THE SIEMPRE VERDE FESCUE MIX FROM EVERGREEN TRUF.
7. PLANTS LOCATED IN BOTTOM THIRD OF POND AREAS ARE ADAPTED TO PERIODS OF INUNDATION.
8. NO OBJECTS, WALLS, FENCES, PARKED VEHICLES OR VEGETATION SHALL BE PLACED WITHIN CLEAR-SIGHT TRIANGLES BETWEEN 3' AND 6' HEIGHT.
9. STREET TREES WILL BE INSTALLED SO AS TO NOT OBSTRUCT STREET SIGNS.
10. STREET TREES TO BE LOCATED/ADJUSTED TO BE A MINIMUM OF 15' FROM STREET LIGHT STANDARDS AND FIRE HYDRANTS PER ZONING SECTION 14-8.4(G)(3)(e)(f).
11. ALL PROJECT STREET TREES SHALL BE IRRIGATED AND MAINTAINED BY THE DEVELOPER.
12. THIS LANDSCAPE PLAN COMPLIES WITH CITY OF SANTA FE ORDINANCE 14-8.4 LANDSCAPE AND SITE DESIGN.
13. THIS PLAN INCORPORATES PASSIVE WATER HARVESTING TECHNIQUES FOR LANDSCAPE IRRIGATION WHEREVER MADE POSSIBLE BY THE GRADING AND DRAINAGE PLAN. DETENTION AND RETENTION PONDS ARE INTENDED AS INTEGRATED LANDSCAPE FEATURES RATHER THAN SINGLE USE FLOOD CONTROL FEATURES.
14. TURF GRASS SOD OR TURF GRASS SEED MIXES CONTAIN NO MORE THAN TWENTY-FIVE PERCENT KENTUCKY BLUEGRASS PER 14-8.4(F)(3)(A) .
15. TRANSITION LINE BETWEEN EXCAVATION AND NATIVE SOIL SHALL BE SMOOTHLY RAKED, CREATING A CLEAN CONSISTENT GRADE.
16. ALL PLANTS SHALL BE COVERED BY A 1-YEAR WARRANTY FROM POINT OF SUBSTANTIAL COMPLETION, PROVIDED THAT PROPER MAINTENANCE HAS BEEN PERFORMED ON LANDSCAPE.
17. ALL DISTURBED AREAS DUE TO CONSTRUCTION AND NOT PART OF THE LANDSCAPE PLAN SHALL BE REVEGETATED AND IRRIGATED INCLUDING SPOIL PILES AND STOCK PILES OF ANY MATERIAL. GRASS SEED MIX SHALL BE DRYLAND BLEND NATIVE GRASS MIXTURE FROM PLANTS OF THE SOUTHWEST OR EQUAL. SEED RATE WILL BE 2 LBS. PER 1,000 SF.
18. EXISTING GRADE BELOW NATIVE TREES AND SHRUBS SHALL REMAIN UNDISTURBED THROUGHOUT THE DRIPLINE OF THE PLANT MATERIAL. NO MOUNDING OF SOIL, FILL DIRT, ORGANIC OR INORGANIC DEBRIS SHALL BE ABANDONED UNDER NATIVE PLANT MATERIAL CANOPIES.
19. AREAS OF NATURAL GRAVEL, COBBLE, FRACTURED STONE, AND/OR BOULDER FIELDS SHALL BE RESTORED TO THE NATURAL STATE THAT EXISTED PRIOR TO CONSTRUCTION. GRADE OUT ANY DAMAGE TO THE NATURAL TERRAIN PRIOR TO THE RE-APPLICATION OF NATIVE STONE MATERIAL.
20. PER 14-8.4(E)(4)(g) PLANTING BEDS SHALL BE SWALED, SLOPED OR RECESSED BELOW GRADE TO PREVENT FUGITIVE WATER BY GRADING CONTRACTOR.
21. A SECURITY FENCE AROUND PONDS THREE FEET AND DEEPER WITH A MAINTENANCE GATE WILL BE INSTALLED.
22. THE GRAVEL MULCH IS WASHED & SCREENED PRIOR TO INSTALLATION.
23. 14-8.4(J)(1) WALL AND FENCES: FOR ANY PROJECT TO WHICH THIS SUBSECTION 14-8.4(J) APPLIES, PUBLICLY VISIBLE WALLS AND FENCES SHALL BE WROUGHT IRON OR SIMULATED WROUGHT IRON, WOOD OR SIMULATED WOOD, CEDAR POLE, ADOBE, SPLIT-FACED CONCRETE BLOCK, STONE, STUCCOED OR RECTANGULAR MESH WIRE ON WOODEN POSTS IN COMBINATION WITH VINES OR OTHER CLIMBING PLANT MATERIAL.
24. RETAINING WALL / FENCE: 14-8.4(J)(2)(b)(i) ANY WALL OR FENCE THAT IS MORE THAN THREE(3) FEET INHEIGHT ABOVE FINISHED GRADE ON THE SIDE FACING THE STREET, SHALL BE SET BACK FROM THE STREET RIGHT OF WAY LINE A DISTANCE EQUAL TO OR GREATER THAT THE HEIGHT.
25. 14-8.4(J)(2)(b)(ii) THE SETBACK AREA REQUIRED BY SUBSECTION (b)(ii) SHALL BE LANDSCAPED WITH PLANT MATERIAL THAT CONSISTS OF PREDOMINANTLY THORNY OR OTHER BARRIER PLANTINGS THAT WILL COVER A MINIMUM OF SEVENTY-FIVE PERCENT OF THE GROUND AREA OF THE PLANTER AND THAT WILL SCREEN A MINIMUM OF SEVENTY-FIVE PERCENT OF THE FACE OF THE FENCE OR WALL AT MATURITY.
26. AN IRRIGATION PLAN WILL BE PROVIDED PRIOR TO PERMIT REVIEW.
27. A SAFETY INSPECTION BY AN INDEPENDENT CONTRACTOR IS REQUIRED FOR THE PLAY EQUIPMENT.
28. LANDSCAPING IN FRONT OF EACH LOT TO BE INSTALLED WHEN THE HOME FRONT YARD IS INSTALLED.
29. STREET TREE IRRIGATION WILL BE PROVIDED AT EACH LOT.

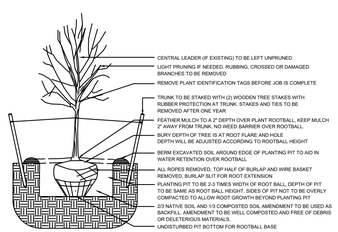


1 TREE PLANTING DETAIL N.T.S.

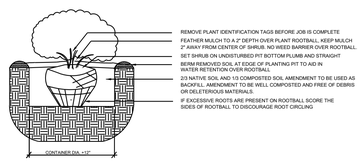


2 SHRUB PLANTING DETAIL N.T.S.

## SIGNIFICANT TREES

58 SIGNIFICANT TREES EXISTING ON SITE (DECIDUOUS TREES 6"+ DBH OR 8' OR TALLER FOR EVERGREEN TREES)

00 SIGNIFICANT TREES TO REMAIN
58 SIGNIFICANT TREES TO BE REMOVED

58 TOTAL MINIMUM NUMBER OF TREES REQUIRED ON SITE (EQUAL TO TOTAL SIGNIFICANT TREES EXISTING ON SITE)
226 TOTAL NUMBER OF TREES PROVIDED ON SITE

* TREES CLASSIFIED BY NMDA AS NOXIOUS WEEDS THAT ARE SMALLER THAN 12" CALIPER ARE EXEMPT FROM THIS REVIEW INCLUDING RUSSIAN OLIVE, SIBERIAN ELM, TREE OF HEAVEN AND SALT CEDAR.
* DURING CONSTRUCTION, EXISTING PLANT MATERIAL TO BE PRESERVED SHALL BE ENCLOSED BY A TEMPORARY FENCE AT LEAST (5) FEET OUTSIDE THE DRIPLINE. NO VEHICLE PARKING, MATERIAL STORAGE OR STOCKPILING SHALL OCCUR WITHIN THE ENCLOSED AREA AT ANY TIME, FOR ANY REASON.
* DESTROYED VEGETATION SHALL BE REMOVED PROMPTLY TO PREVENT INSECT INFESTATION OF HEALTHY VEGETATION.
* THE PRESERVATION OF PLANT SPECIES CLASSIFIED AS NOXIOUS WEEDS IS DISCOURAGED.

## LANDSCAPE DATA

| | | | | REQUIRED | PROVIDED |
|---|---|---|---|---|---|
| AREAS (SF) | | | | | |
| | OPEN SPACE | | | - | 59,699 |
| | PONDING AREA | | | - | 7,646 |
| PLANTING | | | | REQUIRED | PROVIDED |
| | TREE | OPEN SPACE | ONE TREE PER 500 SF OF REQUIRED OPEN SPACE | 120 | 120 |
| | | | MINIMUM 25% EVERGREEN | 31 | 31 |
| | | PONDING AREA | ONE TREE PER 500 SF OF PONDING AREA | 16 | 16 |
| | | | MINIMUM 25% EVERGREEN REQUIRED/PROVIDED | 5 | 8 |
| | SHRUB | OPEN SPACE | TWO SHRUBS PER 500 SF OF REQUIRED OPEN SPACE | 239 | 239 |
| | | | MINIMUM 25% EVERGREEN | 60 | 108 |
| | | PONDING AREA | THREE SHRUBS PER 500 SF OF PONDING AREA | 46 | 46 |
| | | | MINIMUM 25% EVERGREEN REQUIRED/PROVIDED | 12 | 27 |
| STREET TREE | | | | REQUIRED | PROVIDED |
| | ONE TREE PER 30 LF ON AVERAGE | | | - | - |
| | | 2,601 | LF | 87 | 87 |
| SCREENING SHRUBS REQUIRED ALONG THE MAIN STREET | | | | REQUIRED | PROVIDED |
| | | | | 49 | 49 |
| TOTALS | | | | REQUIRED | PROVIDED |
| | TREES | | 2" CAL OR 6' HT. | 223 | 223 |
| | SHRUBS | | 5 GAL | 334 | 334 |

## PLANT SCHEDULE PH2

| SYMBOL | QTY | BOTANICAL / COMMON NAME | SIZE | WATER |
|---|---|---|---|---|
| DECIDUOUS TREES | | | | |
| | 17 | ACER NEGUNDO `SENSATION` SENSATION BOX ELDER MAPLE | 2" B&B | L-M |
| | 45 | MALUS X `SPRING SNOW` SPRING SNOW CRABAPPLE | 2" B&B | L-M |
| | 47 | PYRUS CALLERYANA `CLEVELAND SELECT` CLEVELAND SELECT PEAR | 2" B&B | L-M |
| | 2 | QUERCUS BUCKLEYI BUCKLEY OAK | 2" B&B | L-M |
| | 34 | ULMUS PROPINQUA `EMERALD SUNSHINE` EMERALD SUNSHINE ELM | 2" B&B | L-M |
| | 39 | ULMUS X `FRONTIER` FRONTIER ELM | 2" B&B | L-M |
| EVERGREEN TREES | | | | |
| | 9 | CEDRUS ATLANTICA ATLAS CEDAR | 6` | L-M |
| | 9 | PINUS LEUCODERMIS BOSNIAN PINE | 6` | L-M |
| | 21 | PINUS NIGRA AUSTRIAN BLACK PINE | 6` | L-M |
| DECIDUOUS SHRUBS | | | | |
| | 24 | ARTEMISIA FILIFOLIA SAND SAGEBRUSH | 5 GAL | VL-L |
| | 31 | FALLUGIA PARADOXA APACHE PLUME | 5 GAL | VL-L |
| | 48 | RHUS TRILOBATA THREE LEAF SUMAC | 5 GAL | VL-L |
| | 51 | ROSA WOODSII MOUNTAIN ROSE | 5 GAL | VL-L |
| EVERGREEN SHRUBS | | | | |
| | 30 | AGAVE PARRYI PARRY`S AGAVE | 5 GAL | VL-L |
| | 18 | CERCOCARPUS LEDIFOLIUS CURL-LEAF MOUNTAIN MAHOGANY | 5 GAL | VL-L |
| | 51 | ERICAMERIA LARICIFOLIA AGUIRRE AGUIRRE TURPENTINE BUSH | 5 GAL | VL-L |
| | 55 | MAHONIA REPENS CREEPING MAHONIA | 5 GAL | VL-L |
| VINE/ESPALIER | | | | |
| | 26 | PARTHENOCISSUS QUINQUEFOLIA VIRGINA CREEPER | 5 GAL | VL-L |

## MATERIAL SCHEDULE PH2

| SYMBOL | DESCRIPTION | QTY |
|---|---|---|
| | LARGE BOULDER | 29 |
| | ANOVA RALLY 32 GALLON TRASH RECEPTACLE, D6004 | 6 |
| | ANOVA COMPLETE PET STATION DISPENSER W/ LID, BAGS & SIGN & POST KDP1003 | 7 |
| | 3/4" WALLIN GRAVEL 2" DEPTH W/ FILTER FABRIC | 53,984 SF |
| | 3/4" GRAY CRUSHED GRAVEL 2" DEPTH W/ FILTER FABRIC | 5,715 SF |
| | 2" - 4" WALLIN ANGULAR COBBLE GRAVEL 4" DEPTH W/ FILTER FABRIC | 7,646 SF |


YELLOWSTONE LANDSCAPE
www.yellowstonelandscape.com
PO Box 10597
Albuquerque, NM 87184
505.898.9615
design@yellowstonelandscape. com


STATE OF NEW MEXICO
CODY McNALLEN
850
REGISTERED LANDSCAPE ARCHITECT
9/3/24

Date: 08.19.2024
Revisions:
1 09.03.2024
2
3
4
5

Drawn by: PL
Reviewed by: CM

# CAJA DEL ORO Ph2

Santa Fe, NM

NORTH

Scale: 1" = 60'

30 0 60 120

Sheet Title:
Landscape Plan

Sheet Number:
LP-00



Z:\Drawings\PROJECTS\2024 - PENDING\CAJA DEL ORO\Ph 2 - CAD\Cajo Del Oro_Landscape Plan_(20240819).dwg 8/3/2024 3:36:03 PM, DWG To PDF.pc3




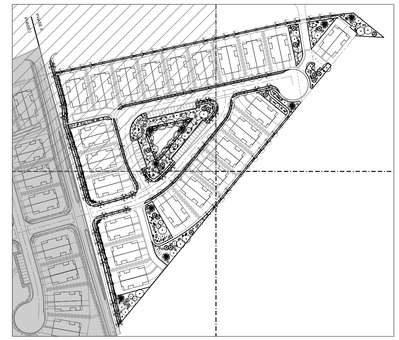

## PLANT SCHEDULE PH2

| SYMBOL | QTY | BOTANICAL / COMMON NAME | SIZE | WATER |
|---|---|---|---|---|
| **DECIDUOUS TREES** | | | | |
| | 17 | ACER NEGUNDO `SENSATION`<br>SENSATION BOX ELDER MAPLE | 2" B&B | L-M |
| | 45 | MALUS X `SPRING SNOW`<br>SPRING SNOW CRABAPPLE | 2" B&B | L-M |
| | 47 | PYRUS CALLERYANA `CLEVELAND SELECT`<br>CLEVELAND SELECT PEAR | 2" B&B | L-M |
| | 2 | QUERCUS BUCKLEYI<br>BUCKLEY OAK | 2" B&B | L-M |
| | 34 | ULMUS PROPINQUA `EMERALD SUNSHINE`<br>EMERALD SUNSHINE ELM | 2" B&B | L-M |
| | 39 | ULMUS X `FRONTIER`<br>FRONTIER ELM | 2" B&B | L-M |
| **EVERGREEN TREES** | | | | |
| | 9 | CEDRUS ATLANTICA<br>ATLAS CEDAR | 6` | L-M |
| | 9 | PINUS LEUCODERMIS<br>BOSNIAN PINE | 6` | L-M |
| | 21 | PINUS NIGRA<br>AUSTRIAN BLACK PINE | 6` | L-M |
| **DECIDUOUS SHRUBS** | | | | |
| | 24 | ARTEMISIA FILIFOLIA<br>SAND SAGEBRUSH | 5 GAL | VL-L |
| | 31 | FALLUGIA PARADOXA<br>APACHE PLUME | 5 GAL | VL-L |
| | 48 | RHUS TRILOBATA<br>THREE LEAF SUMAC | 5 GAL | VL-L |
| | 51 | ROSA WOODSII<br>MOUNTAIN ROSE | 5 GAL | VL-L |
| **EVERGREEN SHRUBS** | | | | |
| | 30 | AGAVE PARRYI<br>PARRY`S AGAVE | 5 GAL | VL-L |
| | 18 | CERCOCARPUS LEDIFOLIUS<br>CURL-LEAF MOUNTAIN MAHOGANY | 5 GAL | VL-L |
| | 51 | ERICAMERIA LARICIFOLIA AGUIRRE<br>AGUIRRE TURPENTINE BUSH | 5 GAL | VL-L |
| | 55 | MAHONIA REPENS<br>CREEPING MAHONIA | 5 GAL | VL-L |
| **VINE/ESPALIER** | | | | |
| | 26 | PARTHENOCISSUS QUINQUEFOLIA<br>VIRGINA CREEPER | 5 GAL | VL-L |

## MATERIAL SCHEDULE PH2

| SYMBOL | DESCRIPTION | QTY |
|---|---|---|
| | LARGE BOULDER | 29 |
| | ANOVA RALLY 32 GALLON TRASH RECEPTACLE, D6004 | 6 |
| | ANOVA COMPLETE PET STATION DISPENSER W/ LID, BAGS & SIGN & POST KDP1003 | 7 |
| | 3/4" WALLIN GRAVEL<br>2" DEPTH W/ FILTER FABRIC | 53,984 SF |
| | 3/4" GRAY CRUSHED GRAVEL<br>2" DEPTH W/ FILTER FABRIC | 5,715 SF |
| | 2" - 4" WALLIN ANGULAR COBBLE GRAVEL<br>4" DEPTH W/ FILTER FABRIC | 7,646 SF |

YELLOWSTONE LANDSCAPE
www.yellowstonelandscape.com
PO Box 10597
Albuquerque, NM 87184
505.898.9615
design@yellowstonelandscape. com

STATE OF NEW MEXICO
CODY McNALLEN
650
REGISTERED LANDSCAPE ARCHITECT
9/3/24

Date: 08.19.2024
Revisions:
09.03.2024

Drawn by: PL
Reviewed by: CM

# CAJA DEL ORO
Ph2
Santa Fe, NM

NORTH

Scale: 1" = 20'

10 0 20 40

Sheet Title:
Landscape Plan

Sheet Number:
LP-01

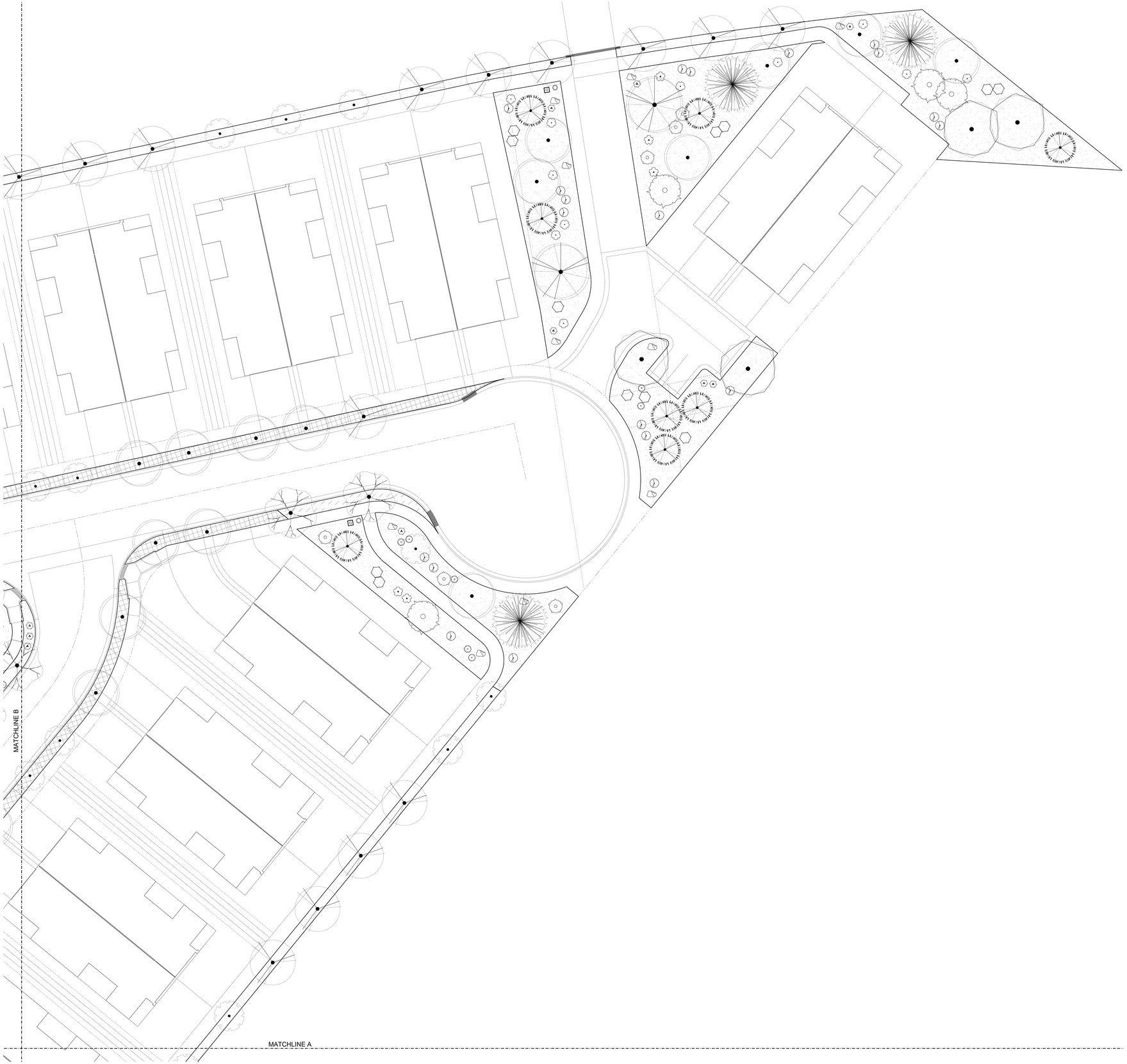


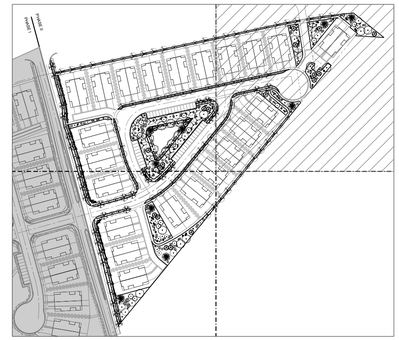

## PLANT SCHEDULE PH2

| SYMBOL | QTY | BOTANICAL / COMMON NAME | SIZE | WATER |
|---|---|---|---|---|
| **DECIDUOUS TREES** | | | | |
| | 17 | ACER NEGUNDO `SENSATION`<br>SENSATION BOX ELDER MAPLE | 2" B&B | L-M |
| | 45 | MALUS X `SPRING SNOW`<br>SPRING SNOW CRABAPPLE | 2" B&B | L-M |
| | 47 | PYRUS CALLERYANA `CLEVELAND SELECT`<br>CLEVELAND SELECT PEAR | 2" B&B | L-M |
| | 2 | QUERCUS BUCKLEYI<br>BUCKLEY OAK | 2" B&B | L-M |
| | 34 | ULMUS PROPINQUA `EMERALD SUNSHINE`<br>EMERALD SUNSHINE ELM | 2" B&B | L-M |
| | 39 | ULMUS X `FRONTIER`<br>FRONTIER ELM | 2" B&B | L-M |
| **EVERGREEN TREES** | | | | |
| | 9 | CEDRUS ATLANTICA<br>ATLAS CEDAR | 6` | L-M |
| | 9 | PINUS LEUCODERMIS<br>BOSNIAN PINE | 6` | L-M |
| | 21 | PINUS NIGRA<br>AUSTRIAN BLACK PINE | 6` | L-M |
| **DECIDUOUS SHRUBS** | | | | |
| | 24 | ARTEMISIA FILIFOLIA<br>SAND SAGEBRUSH | 5 GAL | VL-L |
| | 31 | FALLUGIA PARADOXA<br>APACHE PLUME | 5 GAL | VL-L |
| | 48 | RHUS TRILOBATA<br>THREE LEAF SUMAC | 5 GAL | VL-L |
| | 51 | ROSA WOODSII<br>MOUNTAIN ROSE | 5 GAL | VL-L |
| **EVERGREEN SHRUBS** | | | | |
| | 30 | AGAVE PARRYI<br>PARRY`S AGAVE | 5 GAL | VL-L |
| | 18 | CERCOCARPUS LEDIFOLIUS<br>CURL-LEAF MOUNTAIN MAHOGANY | 5 GAL | VL-L |
| | 51 | ERICAMERIA LARICIFOLIA AGUIRRE<br>AGUIRRE TURPENTINE BUSH | 5 GAL | VL-L |
| | 55 | MAHONIA REPENS<br>CREEPING MAHONIA | 5 GAL | VL-L |
| **VINE/ESPALIER** | | | | |
| | 26 | PARTHENOCISSUS QUINQUEFOLIA<br>VIRGINA CREEPER | 5 GAL | VL-L |

## MATERIAL SCHEDULE PH2

| SYMBOL | DESCRIPTION | QTY |
|---|---|---|
| | LARGE BOULDER | 29 |
| | ANOVA RALLY 32 GALLON TRASH RECEPTACLE, D6004 | 6 |
| | ANOVA COMPLETE PET STATION DISPENSER W/ LID, BAGS & SIGN & POST KDP1003 | 7 |
| | 3/4" WALLIN GRAVEL<br>2" DEPTH W/ FILTER FABRIC | 53,984 SF |
| | 3/4" GRAY CRUSHED GRAVEL<br>2" DEPTH W/ FILTER FABRIC | 5,715 SF |
| | 2" - 4" WALLIN ANGULAR COBBLE GRAVEL<br>4" DEPTH W/ FILTER FABRIC | 7,646 SF |

YELLOWSTONE LANDSCAPE
www.yellowstonelandscape.com
P O Box 10597
Albuquerque, NM 87184
505.898.9615
design@yellowstonelandscape. com

STATE OF NEW MEXICO
CODY McNALLEN
850
REGISTERED LANDSCAPE ARCHITECT
9/3/24

Date: 08.19.2024
Revisions:
△ 09.03.2024
△
△
△
△

Drawn by: PL
Reviewed by: CM

# CAJA DEL ORO Ph2

Santa Fe, NM

NORTH

Scale: 1" = 20'

10 0 20 40

Sheet Title:
Landscape Plan

Sheet Number:
LP-02

Z:\Drawings\ALL DESIGNS - TRANSFER\ - ACTIVE DESIGN\Caja del Oro\1 - CAD\Caja Del Oro Landscape Plan_20241003.dwg, 9/3/2024 4:09:54 PM, DWG To PDF.pc3

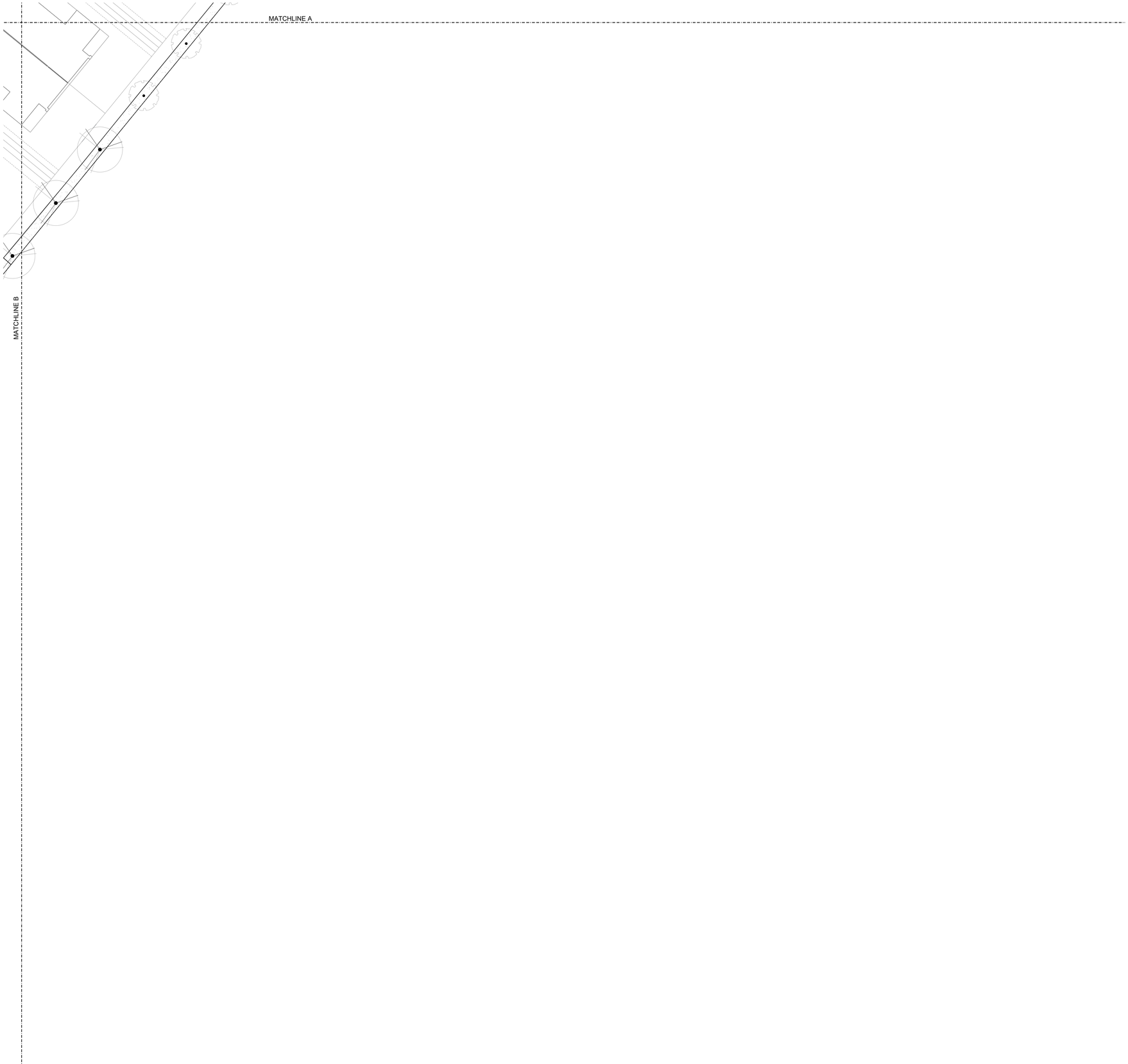




## PLANT SCHEDULE PH2

| SYMBOL | QTY | BOTANICAL / COMMON NAME | SIZE | WATER |
|---|---|---|---|---|
| **DECIDUOUS TREES** | | | | |
| | 17 | ACER NEGUNDO `SENSATION`<br>SENSATION BOX ELDER MAPLE | 2" B&B | L-M |
| | 45 | MALUS X `SPRING SNOW`<br>SPRING SNOW CRABAPPLE | 2" B&B | L-M |
| | 47 | PYRUS CALLERYANA `CLEVELAND SELECT`<br>CLEVELAND SELECT PEAR | 2" B&B | L-M |
| | 2 | QUERCUS BUCKLEYI<br>BUCKLEY OAK | 2" B&B | L-M |
| | 34 | ULMUS PROPINQUA `EMERALD SUNSHINE`<br>EMERALD SUNSHINE ELM | 2" B&B | L-M |
| | 39 | ULMUS X `FRONTIER`<br>FRONTIER ELM | 2" B&B | L-M |
| **EVERGREEN TREES** | | | | |
| | 9 | CEDRUS ATLANTICA<br>ATLAS CEDAR | 6` | L-M |
| | 9 | PINUS LEUCODERMIS<br>BOSNIAN PINE | 6` | L-M |
| | 21 | PINUS NIGRA<br>AUSTRIAN BLACK PINE | 6` | L-M |
| **DECIDUOUS SHRUBS** | | | | |
| | 24 | ARTEMISIA FILIFOLIA<br>SAND SAGEBRUSH | 5 GAL | VL-L |
| | 31 | FALLUGIA PARADOXA<br>APACHE PLUME | 5 GAL | VL-L |
| | 48 | RHUS TRILOBATA<br>THREE LEAF SUMAC | 5 GAL | VL-L |
| | 51 | ROSA WOODSII<br>MOUNTAIN ROSE | 5 GAL | VL-L |
| **EVERGREEN SHRUBS** | | | | |
| | 30 | AGAVE PARRYI<br>PARRY`S AGAVE | 5 GAL | VL-L |
| | 18 | CERCOCARPUS LEDIFOLIUS<br>CURL-LEAF MOUNTAIN MAHOGANY | 5 GAL | VL-L |
| | 51 | ERICAMERIA LARICIFOLIA AGUIRRE<br>AGUIRRE TURPENTINE BUSH | 5 GAL | VL-L |
| | 55 | MAHONIA REPENS<br>CREEPING MAHONIA | 5 GAL | VL-L |
| **VINE/ESPALIER** | | | | |
| | 26 | PARTHENOCISSUS QUINQUEFOLIA<br>VIRGINA CREEPER | 5 GAL | VL-L |

## MATERIAL SCHEDULE PH2

| SYMBOL | DESCRIPTION | QTY |
|---|---|---|
| | LARGE BOULDER | 29 |
| | ANOVA RALLY 32 GALLON TRASH RECEPTACLE, D6004 | 6 |
| | ANOVA COMPLETE PET STATION DISPENSER W/ LID, BAGS & SIGN & POST KDP1003 | 7 |
| | 3/4" WALLIN GRAVEL<br>2" DEPTH W/ FILTER FABRIC | 53,984 SF |
| | 3/4" GRAY CRUSHED GRAVEL<br>2" DEPTH W/ FILTER FABRIC | 5,715 SF |
| | 2" - 4" WALLIN ANGULAR COBBLE GRAVEL<br>4" DEPTH W/ FILTER FABRIC | 7,646 SF |

YELLOWSTONE LANDSCAPE
www.yellowstonelandscape.com
PO Box 10597
Albuquerque, NM 87184
505.898.9615
design@yellowstonelandscape. com

STATE OF NEW MEXICO
CODY McNALLEN
850
REGISTERED LANDSCAPE ARCHITECT
9/3/24

Date: 08.19.2024
Revisions:
- 09.03.2024
-
-
-
-

Drawn by: PL
Reviewed by: CM

# CAJA DEL ORO Ph2

Santa Fe, NM

NORTH

Scale: 1" = 20'

10 0 20 40

Sheet Title:
Landscape Plan

Sheet Number:
LP-03

Z:\Drawings\PROJECTS\CDO - TRANSFER\ - ACTIVE CDO\Caja Del Oro_Landscape Plan_20240903.dwg, 9/3/2024 4:10:04 PM, DWG To PDF.pc3

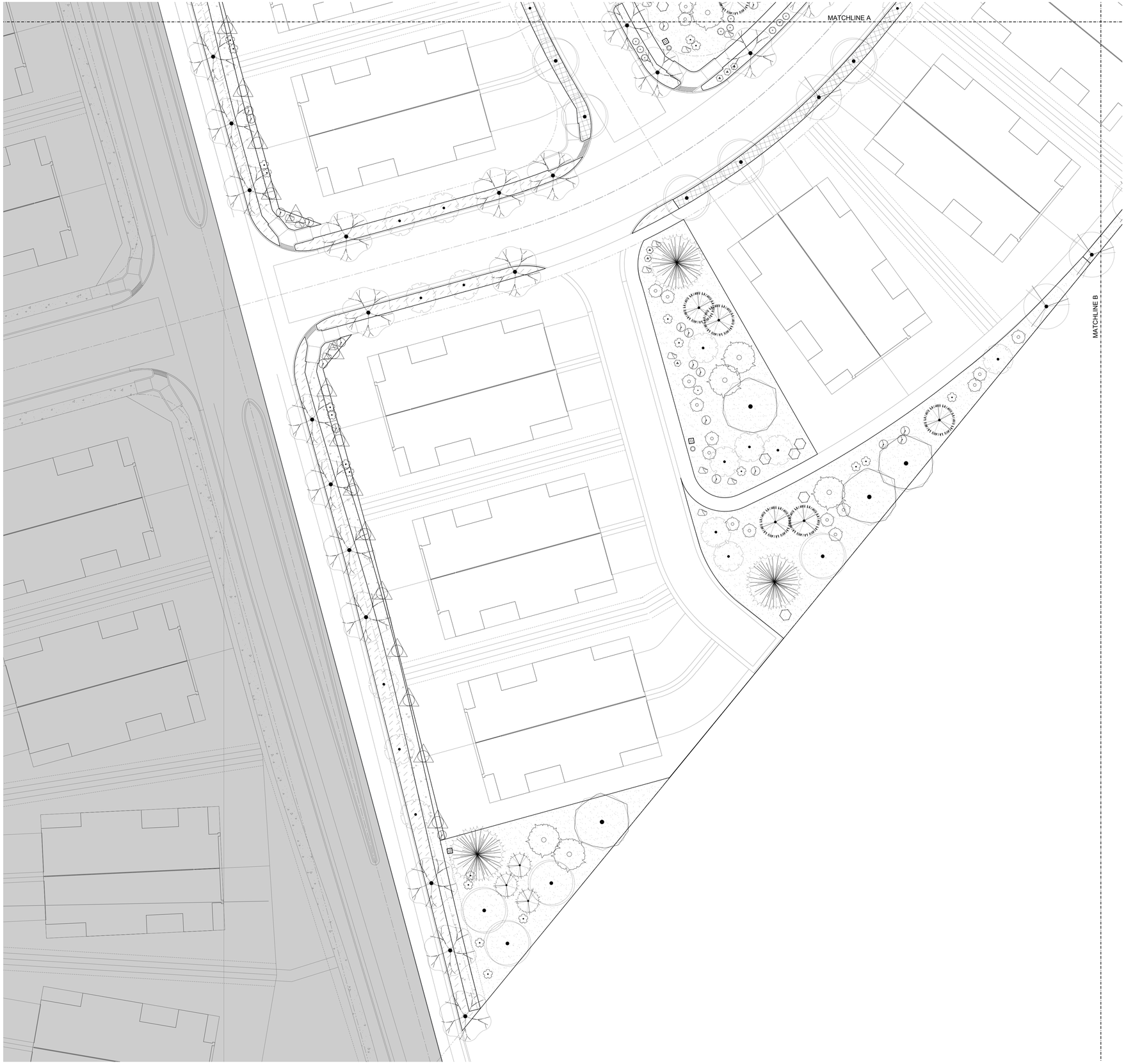


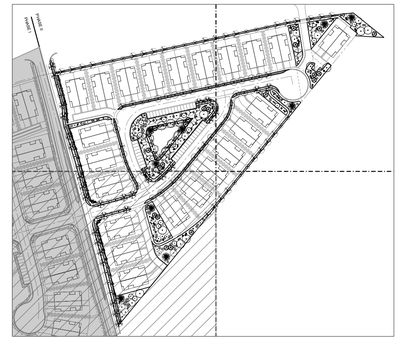

## PLANT SCHEDULE PH2

| SYMBOL | QTY | BOTANICAL / COMMON NAME | SIZE | WATER |
|---|---|---|---|---|
| **DECIDUOUS TREES** | | | | |
| | 17 | ACER NEGUNDO `SENSATION`<br>SENSATION BOX ELDER MAPLE | 2" B&B | L-M |
| | 45 | MALUS X `SPRING SNOW`<br>SPRING SNOW CRABAPPLE | 2" B&B | L-M |
| | 47 | PYRUS CALLERYANA `CLEVELAND SELECT`<br>CLEVELAND SELECT PEAR | 2" B&B | L-M |
| | 2 | QUERCUS BUCKLEYI<br>BUCKLEY OAK | 2" B&B | L-M |
| | 34 | ULMUS PROPINQUA `EMERALD SUNSHINE`<br>EMERALD SUNSHINE ELM | 2" B&B | L-M |
| | 39 | ULMUS X `FRONTIER`<br>FRONTIER ELM | 2" B&B | L-M |
| **EVERGREEN TREES** | | | | |
| | 9 | CEDRUS ATLANTICA<br>ATLAS CEDAR | 6` | L-M |
| | 9 | PINUS LEUCODERMIS<br>BOSNIAN PINE | 6` | L-M |
| | 21 | PINUS NIGRA<br>AUSTRIAN BLACK PINE | 6` | L-M |
| **DECIDUOUS SHRUBS** | | | | |
| | 24 | ARTEMISIA FILIFOLIA<br>SAND SAGEBRUSH | 5 GAL | VL-L |
| | 31 | FALLUGIA PARADOXA<br>APACHE PLUME | 5 GAL | VL-L |
| | 48 | RHUS TRILOBATA<br>THREE LEAF SUMAC | 5 GAL | VL-L |
| | 51 | ROSA WOODSII<br>MOUNTAIN ROSE | 5 GAL | VL-L |
| **EVERGREEN SHRUBS** | | | | |
| | 30 | AGAVE PARRYI<br>PARRY`S AGAVE | 5 GAL | VL-L |
| | 18 | CERCOCARPUS LEDIFOLIUS<br>CURL-LEAF MOUNTAIN MAHOGANY | 5 GAL | VL-L |
| | 51 | ERICAMERIA LARICIFOLIA AGUIRRE<br>AGUIRRE TURPENTINE BUSH | 5 GAL | VL-L |
| | 55 | MAHONIA REPENS<br>CREEPING MAHONIA | 5 GAL | VL-L |
| **VINE/ESPALIER** | | | | |
| | 26 | PARTHENOCISSUS QUINQUEFOLIA<br>VIRGINA CREEPER | 5 GAL | VL-L |

## MATERIAL SCHEDULE PH2

| SYMBOL | DESCRIPTION | QTY |
|---|---|---|
| | LARGE BOULDER | 29 |
| | ANOVA RALLY 32 GALLON TRASH RECEPTACLE, D6004 | 6 |
| | ANOVA COMPLETE PET STATION DISPENSER W/ LID, BAGS & SIGN & POST KDP1003 | 7 |
| | 3/4" WALLIN GRAVEL<br>2" DEPTH W/ FILTER FABRIC | 53,984 SF |
| | 3/4" GRAY CRUSHED GRAVEL<br>2" DEPTH W/ FILTER FABRIC | 5,715 SF |
| | 2" - 4" WALLIN ANGULAR COBBLE GRAVEL<br>4" DEPTH W/ FILTER FABRIC | 7,646 SF |


YELLOWSTONE LANDSCAPE
www.yellowstonelandscape.com
PO Box 10597
Albuquerque, NM 87184
505.898.9615
design@yellowstonelandscape. com


STATE OF NEW MEXICO
CODY McNALLEN
650
REGISTERED LANDSCAPE ARCHITECT
9/3/24

Date: 08.19.2024
Revisions:
09.03.2024

Drawn by: PL
Reviewed by: CM

# CAJA DEL ORO
## Ph2
Santa Fe, NM

NORTH

Scale: 1" = 20'

10 0 20 40

Sheet Title:
Landscape Plan

Sheet Number:
LP-04

# PULTE CAJA DEL ORO PHASE 2

## CONSTRUCTION PLANS

## SANTA FE, NEW MEXICO

## GRADING, PAVING, AND CITY UTILITIES

DECEMBER 2024

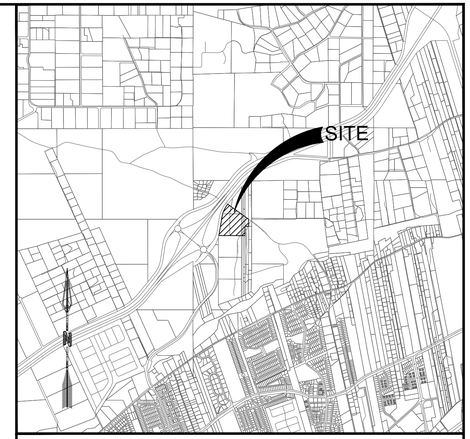


VICINITY MAP: J-14, K-14

### Sheet List Table


| Sheet Number | Sheet Title |
|---|---|
| | GENERAL |
| G-100 | Cover |
| G-101 | General Notes |
| G-102 | Survey 1 |
| G-103 | Survey 2 |
| G-104 | Plat 1 |
| G-105 | Plat 2 |
| G-106 | Plat 3 |
| C-107 | Topo Survey |
| G-108 | Overall Site Plan |
| | CIVIL |
| C-100 | Grading Plan |
| C-101 | North Detailed Grading Plan |
| C-102 | South Detailed Grading Plan |
| C-103 | North Pond Grading Plan |
| C-104 | Structural Retaining Wall Detail |
| C-105 | Perimeter Wall & Fence Plan |
| C-106 | Typical Stair Detail |
| C-107 | Overall Paving Plan |
| C-108 | Road Cross Section 1 |
| C-109 | Road Cross Section 2 |
| C-110 | Typical Lot Grading |
| C-111 | Typical Alley Grading |
| C-112 | Campo Del Norte Loop Paving P&P 1 |
| C-113 | Campo del Norte Loop Paving P&P 2 |
| C-114 | Campo del Norte Alley & Court Paving P&P 3 |
| C-115 | Campo del Norte Way & Culdesac Paving P&P 4 |
| C-116 | Campo Del Norte Loop Intersection Detail 1 |
| C-117 | Campo Del Norte Loop Intersection Detail 2 |
| C-118 | NMDOT Emergency Exit |
| C-119 | Traffic Control |
| C-120 | Sign, Sign Face, and Striping Details |
| C-121 | Overall Signing and Striping Plan |
| C-122 | Overall Utility Plan |
| C-123 | Campo del Norte Loop Sanitary Sewer P&P 1 |
| C-124 | Campo del Norte Loop Sanitary Sewer P&P 2 |
| C-125 | Campo del Norte Court Sanitary Sewer P&P |
| C-126 | Campo del Norte Alley Sanitary Sewe P&P |
| C-127 | Onsite Storm Drain Plan & Profile |
| C-128 | Temporary Erosion and Sediment Control Measures |
| C-129 | Slope Analysis Plan |
| WATER | |
| C-130 | |
| C-131 | Overall Water Plan |
| C-132 | Campo del Norte Loop Waterline P&P 1 |
| C-133 | Campo del Norte Loop Waterline P&P 2 |
| C-134 | Campo del Norte Alley Waterline P&P |
| DETAILS | |
| C-500 | Utilities & Miscellaneous Details |
| C-501 | Sewer Details |
| C-502 | Sewer Details |
| C-503 | Sewer Details |
| C-504 | Sewer Details |
| C-505 | Sewer Details |
| C-506 | Street & Inlet Details |
| C-507 | Street & Inlet Details |



OWNER CONTACT

PULTE GROUP OF NEW MEXICO, INC.
Kevin Patton
Vice President - Land Development
7601 Jefferson St NE
Albuquerque, NM 87109
(505)-473-2090

PLANNING CONSULTANT

JAMES W SIEBERT & ASSOCIATES, INC.
915 Mercer St
Santa Fe, NM, 87505
(505)-983-5588

CIVIL ENGINEER

RESPEC
SHELDON GREER, PE
7770 Jefferson St NE, #200
Albuquerque, NM, 87109
(505)-264-0472

LANDSCAPE ARCHITECT

YELLOWSTONE LANDSCAPE
John Braly, PLA
PO Box 10597
Albuquerque, NM, 87107
(505)-480-3452
Email: jbraly@yellowstonelandscape.com


SHELDON E. GREER NEW MEXICO 17154 10/10/2024 LICENSED PROFESSIONAL ENGINEER


COMMUNITY DESIGN SOLUTIONS
9384 VALLEY VIEW DR NW, SUITE 100
ALBUQUERQUE, NEW MEXICO 87114
505.366.4187



P:\04197 Pulte\04197.006 Pulte Cajia del Oro\3. DWG\Sheets\Phase II\04197.6 Cover.dwg Thu, 12.12.24 - 1227, LSB John Stapleton

## GENERAL NOTES

1. ALL NEW CONSTRUCTION SHOWN ON THE PLANS SHALL BE CONSTRUCTED IN ACCORDANCE WITH THE 2020 CITY OF SANTA FE CONSTRUCTION STANDARDS AND SPECIFICATIONS. WHERE THESE STANDARDS ARE SILENT, THE APWA NEW MEXICO STANDARD SPECIFICATIONS FOR PUBLIC WORKS CONSTRUCTION SHALL APPLY.
2. THIS DEVELOPMENT SHALL COMPLY WITH THE MOST CURRENT REQUIREMENTS OF THE AMERICAN WITH DISABILITIES ACT (ADA) AND THE PUBLIC RIGHT OF WAY ACCESSIBILITY GUIDELINES (PROWAG).
3. THE PROJECT SHALL COMPLY WITH THE PROVISIONS OF THE GUNNISION'S PRAIRIE DOG ORDINANCE (ARTICLE 14-8.12).
4. THE CONTRACTOR SHALL BE SOLELY AND COMPLETELY RESPONSIBLE FOR THE JOB SITE CONDITIONS DURING THE COURSE OF CONSTRUCTION OF THE PROJECT, INCLUDING SAFETY OF ALL PERSONS AND PROPERTY, THIS REQUIREMENT SHALL APPLY CONTINUOUSLY AND SHALL NOT BE LIMITED TO NORMAL WORKING HOURS. THE CONTRACTOR SHALL DEFEND, INDEMNIFY AND HOLD THE ENGINEER AND OWNER HARMLESS FROM ANY AND ALL LIABILITY, REAL OR ALLEGED, IN CONNECTION WITH THE PERFORMANCE OF WORK ON THIS PROJECT, EXCEPT LIABILITY ARISING FROM THE SOLE NEGLIGENCE OF THE ENGINEER OR OWNER.
5. ALL GAS, ELECTRIC, TELEPHONE LINES, CABLES, AND APPURTENANCES ENCOUNTERED DURING CONSTRUCTION THAT REQUIRE RELOCATION SHALL BE RELOCATED BY THE RESPECTIVE UTILITY OWNER. THE CONTRACTOR SHALL BE RESPONSIBLE FOR COORDINATION OF ALL NECESSARY UTILITY RELOCATIONS AND ADJUSTMENTS TO GRADE.
6. THE CONTRACTOR SHALL PROTECT AND MAINTAIN IN SERVICE ALL EXISTING UTILITIES. THE CONTRACTOR SHALL ADEQUATELY SUPPORT AND PROTECT EXISTING UTILITIES AFFECTED BY THE CONTRACTOR'S TRENCHING ACTIVITY. IN THE EVENT THAT EXISTING UTILITIES ARE DAMAGED BY THE CONTRACTOR'S OPERATIONS, THE CONTRACTOR SHALL ARRANGE FOR AND COORDINATE PROMPT REPAIR BY THE RESPECTIVE UTILITY OWNER AND SHALL BEAR THE COST OF REPAIRS.
7. ALL WORK ON THIS PROJECT SHALL BE PERFORMED IN ACCORDANCE WITH APPLICABLE FEDERAL, STATE, AND LOCAL LAWS, RULES, AND REGULATIONS CONCERNING CONSTRUCTION SAFETY AND HEALTH.
8. THE CONTRACTOR SHALL EXERCISE REASONABLE CARE DURING CONSTRUCTION TO PREVENT THE MOVEMENT OF SEDIMENT FROM THE SITE ONTO EXISTING STREETS OR ABUTTING PROPERTY. LOOSE SOIL STOCKPILED DURING CONSTRUCTION ACTIVITIES SHALL BE PROMPTLY CLEANED UP OR PROTECTED FROM BEING CARRIED DOWNSTREAM BY FLOWING WATER.
9. CONTRACTOR SHALL MAINTAIN ACCESS TO ADJACENT PROPERTIES DURING CONSTRUCTION.
10. THE CONTRACTOR SHALL REMOVE AND REPLACE ALL SECTIONS OF EXISTING PAVING, CURB, GUTTER, SIDEWALK, SIGNS, AND/OR STRIPING DAMAGED DURING CONSTRUCTION OF THE PROJECT WHICH ARE OUTSIDE OF THE AREAS DESIGNATED IN THE PLANS TO BE REMOVED AND REPLACED. THIS WORK SHALL BE PERFORMED AT NO COST TO THE OWNER.
11. CONTRACTOR TO VERIFY LOCATION, ELEVATION, SIZE, AND TYPE OF ALL EXISTING UTILITIES PRIOR TO CONSTRUCTION AND WILL NOTIFY ENGINEER OF ANY CONFLICTS.
12. CONTRACTOR TO FIELD VERIFY ALL EXISTING UTILITY LOCATIONS AND DEPTHS PRIOR TO ANY CONSTRUCTION.

## DUST CONTROL NOTES

ALL ON-SITE SOIL DISTURBING CONSTRUCTION ACTIVITIES SHALL BE ADDRESSED AND PROVIDE MEASURES TO MITIGATE OR CONTROL DUST FROM BEING TRANSPORTED OFFSITE AND POLLUTING NEIGHBORING PROPERTIES. ANY PERSON, OWNER, CONTRACTOR OR OPERATOR WHO CONDUCTS EARTHMOVING AND/OR DUST GENERATING ACTIVITIES IS RESPONSIBLE FOR IMPLEMENTING BEST MANAGEMENT PRACTICES (BMPS) IN ORDER TO MITIGATE OFF-PROPERTY TRANSPORT OF FUGITIVE DUST EMISSIONS.

A PLAN, OR STORM WATER PREVENTION PLAN (SWPPP) WHEN APPLICABLE, LISTING THE BEST MANAGEMENT PRACTICES (BMPS), SHALL BE PROVIDED TO THE CITY ENGINEER, OR THEIR DESIGNEE FOR REVIEW AND APPROVAL. THE APPROVED BMPS SHALL BE APPLIED TO THE GRADED AND/OR DISTURBED SOIL IN ORDER TO STABILIZE THE SITE.

THE INITIAL BMP SHALL ADDRESS HOW THE CONTRACTOR WILL MINIMIZE THE AMOUNT OF DISTURBED SOIL, AND HOW THE CONTRACTOR WILL STABILIZE THE DISTURBED SURFACE AREA EXPOSED TO WIND OR VEHICLE TRAFFIC DURING CONSTRUCTION.

SOME BMPS SHALL INCLUDE:

- THE REDUCTION OF VEHICLE SPEEDS: ESTABLISH A MAXIMUM SPEED LIMIT OR INSTALL TRAFFIC CALMING DEVICES TO REDUCE SPEEDS TO A RATE TO MITIGATE OFF-PROPERTY TRANSPORT OF DUST ENTRAINED BY VEHICLES.
- THE MINIMIZATION OF DROP HEIGHT: DRIVERS AND OPERATORS SHALL UNLOAD TRUCK BEDS AND LOADER OR EXCAVATOR BUCKETS SLOWLY, AND MINIMIZE DROP HEIGHT OF MATERIALS TO THE LOWEST HEIGHT POSSIBLE, INCLUDING SCREENING OPERATIONS.
- HIGH WINDS RESTRICTION: TEMPORARILY HALT WORK ACTIVITIES DURING HIGH WIND EVENTS GREATER THAN 30 MPH IF OPERATIONS WOULD RESULT IN OFF-PROPERTY TRANSPORT.
- RESTRICT ACCESS: RESTRICT ACCESS TO THE WORK AREA TO ONLY AUTHORIZED VEHICLES AND PERSONNEL.

IN THE EVENT THE ABOVE PRACTICES ARE INEFFECTIVE TO PREVENT OFF PROPERTY TRANSPORT, THE OWNER OR OPERATOR SHALL USE AT ONE OR MORE OF THE FOLLOWING BEST MANAGEMENT PRACTICES (BMPS):

- WET SUPPRESSION: APPLY WATER TO DISTURBED SOIL SURFACES, BACKFILL MATERIALS, SCREENINGS, AND OTHER DUST GENERATING OPERATIONS AS NECESSARY AND APPROPRIATE CONSIDERING CURRENT WEATHER CONDITIONS, AND PREVENT WATER USED FOR DUST CONTROL FROM ENTERING ANY PUBLIC RIGHT-OF-WAY, STORM WATER DRAINAGE FACILITY, OR WATERCOURSE.
- WIND BARRIER: CONSTRUCT A FENCE OR OTHER TYPE OF WIND BARRIER TO PREVENT WIND EROSION OF THE GRADED OR DISTURBED SURFACE.
- VEGETATION: PLANT VEGETATION APPROPRIATE FOR RETAINING SOILS OR CREATING A WIND BREAK.
- SURFACE ROUGHENING: STABILIZE AN ACTIVE CONSTRUCTION AREA DURING PERIODS OF INACTIVITY OR WHEN VEGETATION CANNOT BE IMMEDIATELY ESTABLISHED.
- COVER: INSTALL COVER MATERIALS SUCH AS TACKIFIERS, EROSION CONTROL BLANKETS, GRAVEL, VEGETATION (WHEN APPROPRIATE), COLD-MILLINGS, ETC. DURING PERIODS OF INACTIVITY AND PROPERLY ANCHOR THE COVER.
- SOIL RETENTION: STABILIZE DISTURBED OR EXPOSED SOIL SURFACE AREAS THAT WILL BE INACTIVE FOR MORE THAN 30 DAYS OR WHILE VEGETATION IS BEING ESTABLISHED.

## GRADING GENERAL NOTES

1. GRADES SHOWN ARE FINAL SURFACE GRADES AFTER COMPLETION OF SURFACE IMPROVEMENTS AND PLACEMENTS OF TOPSOIL.
2. GRADE ADJACENT AREAS AT SITE PERIMETER SHALL MATCH GRADE OF ADJACENT PARCELS.
3. PROVIDE TEMPORARY GRADING FEATURES SUCH AS BERMS, SWALES, SUMPS, AND BASINS TO MANAGE INTERIM STORM WATER RUNOFF DURING CONSTRUCTION PROCESS. STORM WATER RUNOFF LEAVING THE SITE SHALL MEET ALL FEDERAL, STATE AND LOCAL QUALITY REQUIREMENTS.
4. REFER TO GEOTECHNICAL EVALUATIONS REPORT FOR THE SITE.
5. COMPOSITE SLOPE IN HANDICAP PARKING SHALL NOT EXCEED 2% IN ANY DIRECTION.
6. CROSS SLOPE ON ADA CROSSWALKS SHALL NOT EXCEED 2%. LONGITUDINAL SLOPE SHALL NOT EXCEED 5%.
7. LONGITUDINAL SLOPE ON CURB RAMP SHALL NOT EXCEED 8.33%. CROSS SLOPE SHALL NOT EXCEED 2%.
8. COMPOSITE SLOPE ON RAMP LANDINGS SHALL NOT EXCEED 2%.
9. CROSS SLOPES ON SIDEWALKS SHALL NOT EXCEED 2%. LONGITUDINAL SLOPES ON ONSITE SIDEWALKS SHALL NOT EXCEED 5%.
10. SLOPE LABELS SHOW APPROXIMATE SLOPES ONLY. WHERE SLOPE LABELS AND SPOT ELEVATION LABELS CONFLICT, SPOT ELEVATION LABELS SHALL GOVERN AND THE SURVEYOR RESPONSIBLE FOR CONSTRUCTION STAKING SHALL CONTACT THE ENGINEER.
11. LONGITUDINAL SLOPES ON SIDEWALKS ADJACENT TO PUBLIC ROADS SHALL NOT EXCEED THE SLOPE OF THE PUBLIC ROAD.
12. WHERE THIS PLAN IS SILENT REGARDING SURFACE TREATMENT, REFER TO THE LANDSCAPING PLAN. DISTURBED AREAS WITHOUT SURFACE IMPROVEMENTS SPECIFIED IN THE LANDSCAPING OR GRADING PLAN SHALL BE RESEEDED WITH A NATIVE SEEDING MIX. IF THE LANDSCAPING AND GRADING PLAN CONFLICT REGARDING SURFACE TREATMENTS, THE GRADING PLAN SHALL GOVERN.
13. WHERE A PROPOSED RETAINING WALL IS LOCATED ALONG A PROPERTY BOUNDARY WITH AN ADJACENT PROPERTY THAT IS NOT OWNED BY THE DEVELOPER, THEN THE CONTRACTOR SHALL OBTAIN PERMISSION FROM THAT PROPERTY OWNER PRIOR TO INSTALLING A RETAINING WALL FOOTING THAT ENCROACHES INTO THE ADJACENT PROPERTY.

## LEGEND

| | NEW | EXISTING |
|---|---|---|
| CURB & GUTTER | ═══ | ┈┈┈ |
| PAVEMENT EDGE | ——— | ⁄⁄⁄⁄⁄ |
| STREET LIGHT | ■—☀ | □—☀ |
| STOP SIGN | ● | |
| TYPE III BARRICADE | ⊥⊥ | |
| CURB TRANSITION | ▬ | |
| MATCHLINE OF NEW TO EXISTING ASPHALT PAVEMENT. | ⁄⁄⁄⁄⁄⁄⁄ | |
| TRANSITION CROWN PER NM APWA STD DWG 2401 | ▨ | |

DESIGNED SEG
DRAWN SEG
CHECKED JL
DATE 12.12.2024

REVISION

COMMUNITY DESIGN SOLUTIONS
9384 Valley View Drive NW, Suite 100
Albuquerque, NM 87144
505.366.4187

STAMP

SHELDON E. GREER
NEW MEXICO
17154
REGISTERED PROFESSIONAL ENGINEER
12/12/2023

THIS DRAWING IS INCOMPLETE AND NOT TO BE USED FOR CONSTRUCTION UNLESS IT IS STAMPED, SIGNED AND DATED

nm811 Know what's below. Call before you dig.

PROJ. #: 04197.006

PROJECT NAME: PULTE CAJA DEL ORO PHASE 2

SHEET TITLE: GENERAL NOTES

SUBMITTED FOR: CONSTRUCTION

SHEET NUMBER: G-101

NAME: P:\04197 Pulte\04197.006 Pulte Caja del Oro\3. DWG\Sheets\Phase II\04197.6 General Notes.dwg PLOT DATE: Dec 12, 2024 12:27pm

NAME: P:\04197 Pulte\04197.006 Pulte Caja del Oro\3. DWG\Sheets\Phase II\04197.6 Survey 1.dwg PLOT DATE: Dec 12, 2024 12:28pm

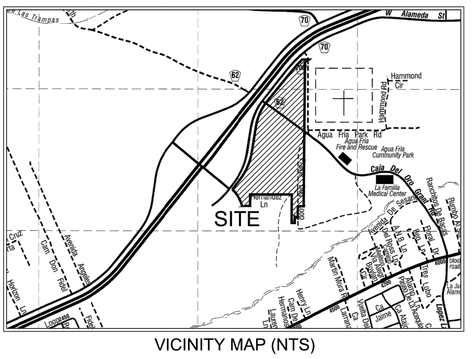
W Alameda St
Rio Grande Trailhead
Hammond Arroyo Dr.
Aqua Fria Park Rd
Aqua Fria Fire and Rescue
Agua Fria Community Park
Caja Del Oro Grande Blvd
La Farmacia Medical Center
SITE
Rancho Viejo Blvd
Buckaroo Blvd
Rancho Viejo Blvd
Camino Carlos Rey
Camino Real
Agua Fria
Agua Fria Trail
Hopper St
Upper Agua Fria Ditch
Agua Fria Ditch
Agua Fria Ditch

NAME: P:\04197 Pulte\04197.006 Pulte Caja del Oro\3. DWG\Sheets\Phase II\04197.6 Survey 1.dwg PLOT DATE: Dec 12, 2024 12:28pm

# CASE #2021-00 LOT LINE ADJUSTMENT & LOT CONSOLIDATION

FOR INFORMATION ONLY

Project No. 04197.006

Zone Map No. J-14, K-14

Sheet G-103

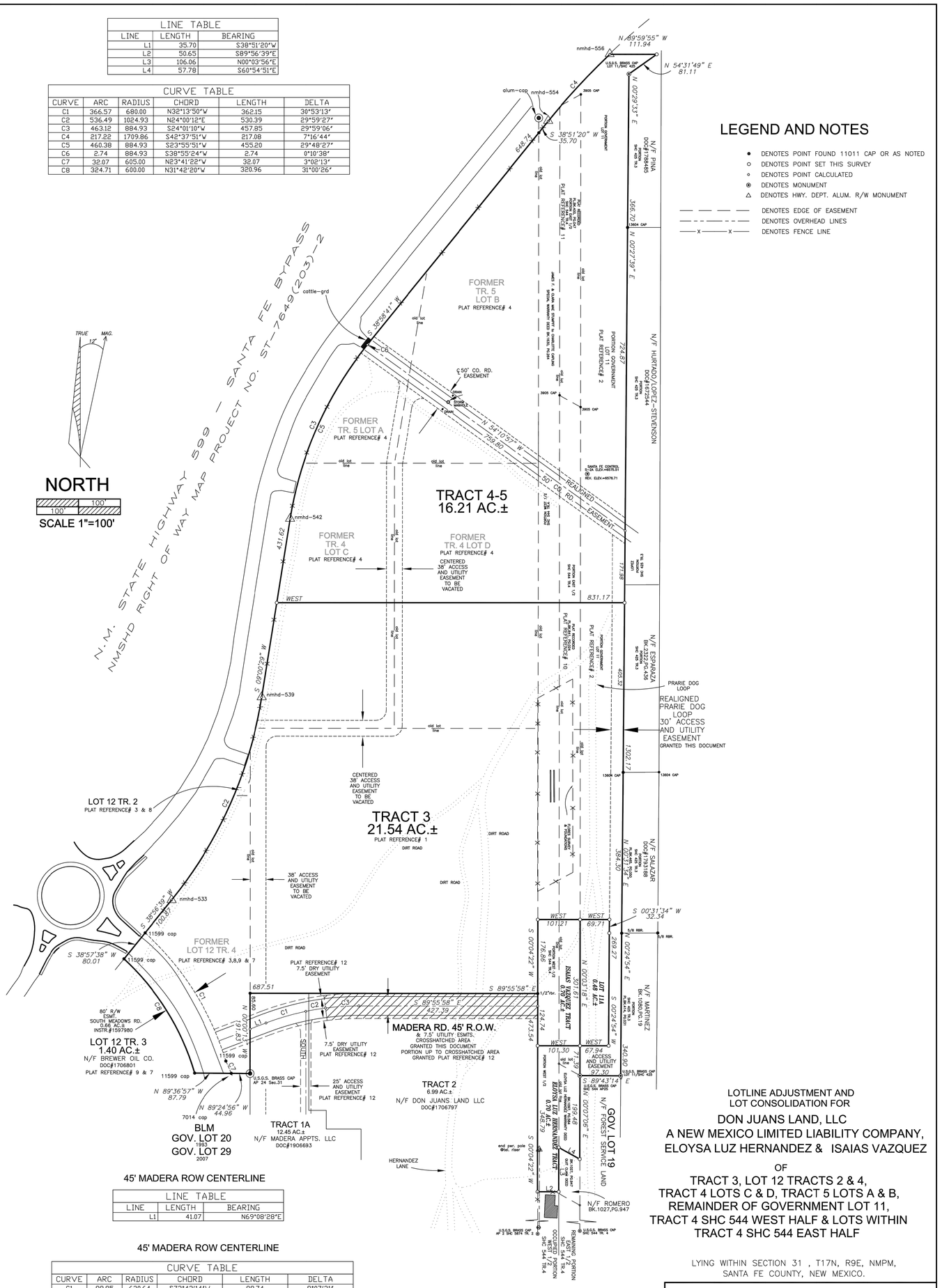
N.M. STATE HIGHWAY 599 – SANTA FE BYPASS
NMSHD RIGHT OF WAY MAP PROJECT NO. ST-7649(203)-2
NORTH
SCALE 1"=100'
TRACT 4-5
16.21 AC.±
TRACT 3
21.54 AC.±
PLAT REFERENCE# 1
TRACT 2
6.99 AC.±
N/F DON JUANS LAND LLC
DOC#1706797
TRACT 1A
12.45 AC.±
N/F MADERA APPTS. LLC
DOC#1906693
LOT 12 TR. 3
1.40 AC.±
N/F BREWER OIL CO.
DOC#1706801
LOT 12 TR. 2
PLAT REFERENCE# 3 & 8
FORMER TR. 5 LOT B
PLAT REFERENCE# 4
FORMER TR. 5 LOT A
PLAT REFERENCE# 4
FORMER TR. 4 LOT C
PLAT REFERENCE# 4
FORMER TR. 4 LOT D
PLAT REFERENCE# 4
FORMER LOT 12 TR. 4
PLAT REFERENCE# 3,8,9 & 7
MADERA RD. 45' R.O.W.
& 7.5' UTILITY ESMTS.
CROSSHATCHED AREA
GRANTED THIS DOCUMENT
PORTION UP TO CROSSHATCHED AREA
GRANTED PLAT REFERENCE# 12
7.5' DRY UTILITY EASEMENT
PLAT REFERENCE# 12
25' ACCESS AND UTILITY EASEMENT
PLAT REFERENCE# 12
38' ACCESS AND UTILITY EASEMENT TO BE VACATED
CENTERED 38' ACCESS AND UTILITY EASEMENT TO BE VACATED
50' CR. RD. EASEMENT
REALIGNED 50' CR. RD. EASEMENT
REALIGNED PRARIE DOG LOOP 30' ACCESS AND UTILITY EASEMENT GRANTED THIS DOCUMENT
PRAIRIE DOG LOOP
HERNANDEZ LANE
BLM
GOV. LOT 20
1992
GOV. LOT 29
2007
GOV. LOT 19
N/F FOREST SERVICE LAND
N/F ROMERO BK.1027,PG.947
N/F HURTADO LOPEZ-STEVENSON DOC#1925414
N/F PINO DOC#1798495
N/F SANDOVAL BK.1332,PG.434
N/F MARTINEZ BK.1080,PG.19
N/F SALAZAR DOC#1781749
LOT 11A
0.48 AC.±
REMAINDER OF GOVERNMENT LOT 11
REMAINING PORTION SHC 544 TR.4
WEST HALF SHC 544 TR.4
EAST HALF SHC 544 TR.4
EAST HALF SHC 544 TR.3
WEST HALF SHC 544 TR.3
BEARS S 00°04'22" W 1324.74'
BEARS S 89°55'58" E 1324.74'
N 89°59'55" W 111.94
N 54°31'49" E 81.11
S 38°51'20" W 35.70
S 38°56'39" W 100.87
S 38°57'38" W 80.01
N 89°36'57" W 87.79
N 89°24'56" W 44.96
S 00°08'24" W 431.68
N 54°10'57" W 788.80
S 89°55'58" E 687.51
S 00°31'34" W 32.34
N 00°23'43" E 956.39
N 00°27'36" E 724.62
N 00°27'54" E 292.27
N 00°27'54" E 384.30
S 00°04'22" W 176.66
S 00°04'22" W 427.39
S 00°04'22" W 196.48
S 00°04'22" W 146.79
N 00°03'18" E 1357.61
S 89°43'14" E 340.00
S 89°55'58" E 97.50
S 89°43'14" W 97.50
S 89°55'58" E 1324.74
S 89°43'14" W 1324.74
S 89°55'58" E 1324.74
S 89°43'14" W 1324.74
WEST 831.17
WEST 101.21
WEST 69.71
WEST 101.30
WEST 67.94
WEST 111.96
WEST 405.32
WEST 1302.17
WEST 340.00
WEST 1324.74
WEST 1324.74
WEST 1324.74

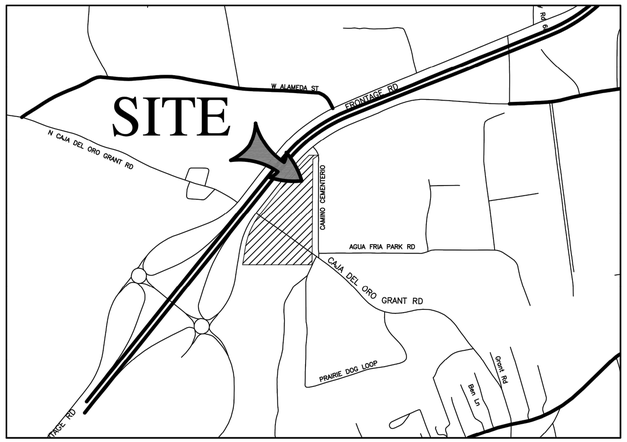


VICINITY MAP
Not To Scale

## GENERAL NOTES

1. BEARINGS ARE GRID AND BASED ON THE NEW MEXICO STATE PLANE COORDINATE SYSTEM, CENTRAL ZONE (NAD83).
2. DISTANCES ARE GROUND. TO CONVERT TO GRID DISTANCES, MUITIPLY BY COMBINED FACTOR OF 0.99958460.
3. DISTANCES ALONG CURVED LINES ARE ARC LENGTHS.
4. RECORD PLAT OR DEED BEARINGS AND DISTANCES, WHERE THEY DIFFER FROM THOSE ESTABLISHED BY THIS FIELD SURVEY, ARE SHOWN IN PARENTHESIS ( ).
5. ALL CORNERS FOUND IN PLACE AND HELD WERE TAGGED WITH A BRASS DISK STAMPED "HUGG L.S. 9750" UNLESS OTHERWISE INDICATED HEREON.
6. ALL CORNERS THAT WERE SET ARE EITHER A 5/8" REBAR WITH CAP STAMPED "HUGG L.S. 9750" OR A CONCRETE NAIL WITH BRASS DISK STAMPED "HUGG L.S. 9750" UNLESS OTHERWISE INDICATED HEREON.

## PUBLIC UTILITY EASEMENTS

PUBLIC UTILITY EASEMENTS SHOWN ON THIS PLAT ARE GRANTED FOR THE COMMON AND JOINT USE OF:

A. PUBLIC SERVICE COMPANY OF NEW MEXICO ("PNM"), A NEW MEXICO CORPORATION, (PNM ELECTRIC) FOR INSTALLATION, MAINTENANCE, AND SERVICE OF OVERHEAD AND UNDERGROUND ELECTRICAL LINES, TRANSFORMERS, AND OTHER EQUIPMENT AND RELATED FACILITIES REASONABLY NECESSARY TO PROVIDE ELECTRICAL SERVICES.

B. NEW MEXICO GAS COMPANY FOR INSTALLATION, MAINTENANCE, AND SERVICE OF NATURAL GAS LINES, VALVES AND OTHER EQUIPMENT AND FACILITIES REASONABLY NECESSARY TO PROVIDE NATURAL GAS SERVICES.

C. QWEST CORPORATION D/B/A CENTURYLINLK QC. FOR THE INSTALLATION, MAINTENANCE, AND SERVICE OF SUCH LINES, CABLE, AND OTHER RELATED EQUIPMENT AND FACILITIES REASONABLY NECESSARY TO PROVIDE COMMUNICATION SERVICES.

D. CABLE TV FOR THE INSTALLATION, MAINTENANCE, AND SERVICE OF SUCH LINES, CABLE, AND OTHER RELATED EQUIPMENT AND FACILITIES REASONABLY NECESSARY TO PROVIDE CABLE SERVICES.

INCLUDED, IS THE RIGHT TO BUILD, REBUILD, CONSTRUCT, RECONSTRUCT, LOCATE, RELOCATE, CHANGE, REMOVE, REPLACE, MODIFY, RENEW, OPERATE AND MAINTAIN FACILITIES FOR PURPOSES DESCRIBED ABOVE, TOGETHER WITH FREE ACCESS TO, FROM, AND OVER SAID EASEMENTS, WITH THE RIGHT AND PRIVILEGE OF GOING UPON, OVER AND ACROSS ADJOINING LANDS OF GRANTOR FOR THE PURPOSES SET FORTH HEREIN AND WITH THE RIGHT TO UTILIZE THE RIGHT OF WAY AND EASEMENT TO EXTEND SERVICES TO CUSTOMERS OF GRANTEE, INCLUDING SUFFICIENT WORKING AREA SPACE FOR ELECTRIC TRANSFORMERS, WITH THE RIGHT AND PRIVILEGE TO TRIM AND REMOVE TREES, SHRUBS OR BUSHES WHICH INTERFERE WITH THE PURPOSES SET FORTH HEREIN. NO BUILDING, SIGN, POOL (ABOVEGROUND OR SUBSURFACE), HOT TUB, CONCRETE OR WOOD POOL DECKING, OR OTHER STRUCTURE SHALL BE ERECTED OR CONSTRUCTED ON SAID EASEMENTS, NOR SHALL ANY WELL BE DRILLED OR OPERATED THEREON. PROPERTY OWNERS SHALL BE SOLELY RESPONSIBLE FOR CORRECTING ANY VIOLATIONS OF NATIONAL ELECTRICAL SAFETY CODE BY CONSTRUCTION OF POOLS, DECKING, OR ANY STRUCTURES ADJACENT TO OR NEAR EASEMENTS SHOWN ON THIS PLAT.

EASEMENTS FOR ELECTRIC TRANSFORMER/SWITCHGEARS, AS INSTALLED, SHALL EXTEND TEN (10) FEET IN FRONT OF TRANSFORMER/SWITCHGEAR DOORS AND FIVE (5) FEET ON EACH SIDE.

DISCLAIMER

IN APPROVING THIS PLAT, PUBLIC SERVICE COMPANY OF NEW MEXICO (PNM) AND NEW MEXICO GAS COMPANY (NMGC) DID NOT CONDUCT A TITLE SEARCH OF THE PROPERTIES SHOWN HEREON. CONSEQUENTLY, PNM AND NMGC DO NOT WAIVE OR RELEASE ANY EASEMENT OR EASEMENT RIGHTS WHICH MAY HAVE BEEN GRANTED BY PRIOR PLAT, REPLAT OR OTHER DOCUMENT AND WHICH ARE NOT SHOWN ON THIS PLAT.

## CITY OF SANTA FE NOTES AND CONDITIONS

1. PROPERTY DEVELOPMENT IS REQUIRED TO COMPLY WITH APPLICABLE PROVISIONS OF CHAPTER 14, LAND DEVELOPMENT CODE, SFCC 2001 AND SUBSEQUENT AMENDMENTS.
2. PROPERTY DEVELOPMENT IS REQUIRED TO COMPLY WITH THE PROVISIONS OF EACH CITY OF SANTA FE ORDINANCE ADOPTED PRIOR TO PLAT AND OR DEVELOPMENT PLAN RECORDING WITH THE COUNTY CLERK OR SUBMITTAL FOR A BUILDING PERMIT APPLICATION THAT MODIFIES ANY PROVISION OF CHAPTER 14, LAND DEVELOPMENT CODE, SFCC 1987 AND SUBSEQUENT AMENDMENTS.
3. EACH LOT SHALL BE SERVED WITH A SEPARATE SEWER AND WATER SERVICE.
4. THESE LOTS SHALL COMPLY WITH INTERNATIONAL FIRE CODE (IFC) 2009 EDITION
5. WASTEWATER USE CHARGES SHALL BE PAID AT THE TIME OF BUILDING PERMIT APPLICATION.
6. NO FENCES, WALLS OR OTHER STRUCTURES SHALL BE CONSTRUCTED WITHIN OR ACROSS SANITARY SEWER EASEMENTS.
7. NO WALLS/FENCES OR OTHER STRUCTURES THAT WOULD IMPEDE DRAINAGE FLOW SHALL BE PLACED WITHIN DRAINAGE EASEMENTS SHOWN HEREON.
8. AN ADA INSPECTION SHALL BE CONDUCTED PRIOR TO APPROVAL OF THE SUBDIVISION INFRASTRUCTURE. THE CONTRACTOR SHALL CONTACT CITY STAFF TO SCHEDULE INSPECTION.
9. ON LOT PONDING IS NOT REQUIRED.
10. ALL PROVISIONS OF THE INFRASTRUCTURE COMPLETION POLICY OF 1-1-2008 MUST BE FOLLOWED. NO BUILDING PERMITS WILL BE ISSUED UNTIL PARTIAL COMPLETION OF THE INFRASTRUCTURE IS OBTAINED. NO CERTIFICATE OF OCCUPANCY WILL BE ISSUED UNTIL SUBSTANTIAL COMPLETION OF THE INFRASTRUCTURE.

## REVIEWED BY CITY OF SANTA FE

CITY ENGINEER FOR LAND USE — DATE

CITY PLANNER — DATE

PUBLIC WORKS — DATE

## COUNTY REVIEW

COUNTY TREASURER — DATE

## APPROVED BY THE CITY PLANNING COMMISSION

CASE # _____

AT THEIR MEETING OF _____, 2021

PLANNING DIVISION CHAIR — DATE

PLANNING COMMISSION SECRETARY — DATE

## UTILITY COMPANIES

CITY OF SANTA FE WASTEWATER — DATE

CITY OF SANTA FE WATER DIVISION — DATE

COMCAST — DATE

PUBLIC SERVICE COMPANY OF N.M. — DATE

NM GAS COMPANY — DATE

**Qwest Corporation, d/b/a CenturyLink QC DISCLAIMER.**

THIS PLAT HAS BEEN APPROVED FOR EASEMENT PURPOSES ONLY. THE SIGNING OF THIS PLAT DOES NOT IN ANY WAY GUARANTEE TELEPHONE SERVICE TO THE SUBDIVISION.

Qwest Corporation, d/b/a CenturyLink QC — DATE

## LEGAL DESCRIPTION

THAT CERTAIN PARCEL OF LAND SITUATE WITHIN SECTIONS 31, TOWNSHIP 17 NORTH, RANGE 9 EAST, NEW MEXICO PRINCIPAL MERIDIAN, CITY OF SANTA FE, SANTA FE COUNTY, NEW MEXICO BEING AND COMPRISING ALL OF TRACT 13, LAS SOLERAS SUBDIVISION, AS SHOWN ON PLAT ENTITLED "LAS SOLERAS ANNEXATION, GENERAL PLAN AMENDMENT, REZONING TO MULTIPLE ZONING DISTRICTS" FILED FOR RECORD IN THE OFFICE OF THE COUNTY CLERK, SANTA FE COUNTY, NEW MEXICO ON MARCH 4, 2010 IN PLAT BOOK 714, PAGES 014-026, AS INSTRUMENT NO. 1592455.

SAID PARCEL CONTAINS 16.41 ACRES, MORE OR LESS.

## DEDICATION AND AFFIDAVIT:

KNOW ALL PERSONS BY THESE PRESENTS THAT THE UNDERSIGNED OWNER(S) HAVE CAUSED TO BE REPLATTED THOSE LANDS SHOWN HEREON. THIS SAID REPLAT IS MADE WITH THE FREE CONSENT AND IN ACCORDANCE WITH THE DESIRES OF SAID OWNER(S). THIS REPLAT CONTAINS 16.41 ACRES, MORE OR LESS. THIS SUBDIVISION LIES WITHIN THE PLATTING JURISDICTION OF THE CITY OF SANTA FE, N.M.

UTILITY COMPANIES ARE HEREBY GRANTED EASEMENTS AS SHOWN HEREON FOR THE CONSTRUCTION, OPERATION AND MAINTENANCE OF UTILITIES INCLUDING BUT NOT LIMITED TO THE RIGHT TO INGRESS & EGRESS, (BOTH SURFACE AND SUBSURFACE) FOR CREWS AND MACHINERY, AND THE RIGHT TO REMOVE OBSTRUCTIONS INTERFERING WITH THE USE OR PURPOSE OF SAID EASEMENT.

NON MOTORIZED MULTI USE BICYCLE AND PEDESTRIAN TRAIL EASEMENTS CREATED BY THIS PLAT AND SHOWN HEREON ARE HEREBY GRANTED FOR PUBLIC USE. CITY TRAIL EASEMENTS ARE MAINTAINED BY THE CITY.

STORMWATER AGREEMENT

PROPERTY OWNER(S) HEREBY AGREE THAT ALL STORM WATER EASEMENTS AND ANY OTHER DRAINAGE IMPROVEMENTS ON PRIVATE PROPERTY WILL BE MAINTAINED AND KEPT FULLY FUNCTIONAL AS ORIGINALLY DESIGNED AND CONSTRUCTED WITHIN PRIVATE PROPERTY BOUNDARIES BY THE HOMEOWNERS ASSOCIATION (TO BE FORMED) (OWNER) AND SUBSEQUENT HEIRS, ASSIGNS, AND FUTURE OWNERS. THE CITY IS HEREBY GRANTED THE FOLLOWING: (1) ACCESS FOR INSPECTION OF SAID IMPROVEMENTS; (2) IN THE EVENT OF DRAINAGE FACILITY MAINTENANCE DEFICIENCY AND AFTER TEN (10) DAYS WRITTEN NOTICE TO THE RESPECTIVE PROPERTY OWNER, TO ENTER AND RESTORE FULL FUNCTIONAL CAPACITY OF THE DRAINAGE IMPROVEMENTS; AND (3) TO LIEN THE PROPERTY FOR BOTH DIRECT AND INDIRECT COSTS ASSOCIATED WITH SUCH WORK. BY SIGNATURE AFFIXED TO THIS INSTRUMENT, THE PROPERTY OWNER(S) APPROVE AND AGREE THAT THIS AGREEMENT IS BINDING PERPETUALLY, RUNNING WITH THE LAND, ON PRESENT AND FUTURE OWNERS, HEIRS, AND ASSIGNS.

PUBLIC ROADWAYS SHOWN HEREON, NOT PREVIOUSLY DEDICATED ARE HEREBY DEDICATED TO THE CITY OF SANTA FE FOR PUBLIC USE.

EASEMENTS SHALL BE BINDING UPON THE UNDERSIGNED AND THEIR SUCCESSORS AND ASSIGNS

OPEN SPACE PARCELS TO BE MAINTAINED BY THE CAJA DEL ORO HOME OWVERS' ASSOCIATION.

## OWNER(S)

TRACT_____
PULTE HOMES OF NEW MEXICO, INC.
A MONTANA LIMITED LIABILITY COMPANY

KEVIN PATTON, DIRECTOR OF LAND DEVELOPMENT & ENTITLEMENT

## ACKNOWLEDGEMENT

STATE OF NEW MEXICO )SS
COUNTY OF BERNALILLO )

THE FOREGOING INSTRUMENT WAS ACKNOWLEDGED AND SUBSCRIBED BEFORE ME BY KEVIN PATTON, DIRECTOR OF LAND DEVELOPMENT & ENTITLEMENT THIS ____ DAY OF _____, 2021.

NOTARY PUBLIC MY COMMISSION EXPIRES

PRELIMINARY PLAT OF

# CAJA DEL ORO SUBDIVISION

PREPARED FOR

## PULTE HOMES OF NEW MEXICO, INC.

COMPRISING TRACT 3, LOT 12 TRACTS 2 & 4, TRACT 4 LOTS C & D, TRACT 5 LOTS A & B, REMAINDER OF GOVERNMENT LOT 11, TRACT 4 SHC 544 WEST HALF & LOTS WITHIN TRACT 4 SHC 544 EAST HALF

SITUATE WITHIN

**SECTIONS 31, TOWNSHIP 17 NORTH, RANGE 9 EAST**
**NEW MEXICO PRINCIPAL MERIDIAN**
**CITY OF SANTA FE**
**SANTA FE COUNTY, NEW MEXICO**

OCTOBER, 2021

## PURPOSE OF PLAT:

THE PURPOSE OF THIS PLAT IS TO:

A. CREATE A RESIDENTIAL SUBDIVISION CONTAINING 88 RESIDENTIAL LOTS.

## CURRENT ZONING

CURRENT ZONING: C-2 & R-1

## SURVEYORS CERTIFICATION

I HEREBY CERTIFY THAT THIS PLAT AND THE NOTES HEREON ARE AN ACCURATE DELINEATION OF A FIELD SURVEY COMPLETED BY ME OR UNDER MY DIRECTION ON _____, 2021, AND ARE TRUE AND CORRECT TO THE BEST OF MY KNOWLEDGE AND BELIEF, AND MEET THE STANDARDS FOR PROFESSIONAL LAND SURVEYORS PRACTICING IN NEW MEXICO.

RICHARD A. CHATROOP N.M.P.L.S. #11011

COUNTY OF SANTA FE )SS
STATE OF NEW MEXICO )
I hereby certify that this instrument was filed for record on the_____day of _____, 2021 A.D. at _____ o'clock_____, and was duly recorded in book_____, page(s)_____of the records of Santa Fe County.

Witness my Hand and Seal of office
Katharine E. Clark
County Clerk, Santa Fe county, N.M.

Deputy

SANTA FE COUNTY TREASURER DATE

"TITLE AND INDEXING INFORMATION FOR COUNTY CLERK"

RICK CHATROOP
PROFESSIONAL LAND SURVEYOR
NEW MEXICO REGISTRATION NO. 11011
(505) 470-0037 110 WAGON TRAIL RD. CERRILLOS, NM. 87010

UPC:
LOT A: 1-049-097-093-306
LOT B: 1-049-097-127-311
LOT C: 1-049-097-089-243
LOT D: 1-049-097-124-244
TRACT 4 SHC 544: 1-049-097-144-213
TRACT 4 E ½ SHC 544: 1-049-097-150-316
LOT 11 SHC 5874: 1-049-097-125-630

PLSS LOCATION: LYING WITHIN SECTIONS 31, T.17.N, R9E, N.M.P.M.

CITY OF SANTA FE, SANTA FE COUNTY, NEW MEXICO

210021_PRELIM PLAT. DWG

SHEET 1

NAME: P:\04197 Pulte\04197.006 Pulte Caja del Oro\3. DWG\Sheets\Phase II\04197.6 Plat 1.dwg PLOT DATE: Dec 12, 2024 12:28pm

FOR INFORMATION ONLY

| Project No. | Zone Map No. | Sheet |
|---|---|---|
| 04197.006 | J-14, K-14 | G-104 |

PRELIMINARY PLAT OF
CAJA DEL ORO SUBDIVISION
FOR
PULTE HOMES OF NEW MEXICO
COMPRIMISING TRACT 4-5
LYING WITHIN SECTION 31 , T17N, R9E, NMPM,
SANTA FE COUNTY, NEW MEXICO.
RICK CHATROOP
PROFESSIONAL LAND SURVEYOR
NEW MEXICO REGISTRATION NO. 11011
(505) 470-0037 110 WAGON TRAIL RD. CERRILLOS, NM. 87010
INDEXING INFORMATION FOR THE COUNTY CLERK
OWNER: PULTE HOMES OF NEW MEXICO, INC.
UPC#S: TRACT 4-5 UPC#1-049-097-000-000
LOCATION: LYING WITHIN SECTION 31, T17N, R9E, NMPM, CITY OF SANTA FE, SANTA FE COUNTY, NEW MEXICO
SHEET 2
COUNTY OF SANTA FE )SS
STATE OF NEW MEXICO )
I hereby certify that this instrument was filed for record on the ____ day of _____ A.D. ____ at ____ o'clock ____ m. and was duly recorded in book ____ page ____
Witness my Hand and Seal of Office
Katherine Miller
County Clerk, Santa Fe County,N.M.
Deputy
TRACT 3
21.54 AC.±
PLAT REFERENCE# 1
N/F PINA
DOC#1788485
PORTION
SHC 425 TR.3
N/F HURTADO/LOPEZ-STEVENSON
DOC#1672544
PORTION
SHC 425 TR.3
N/F ESPARAZA
BK.2322,PG.436
PORTION
SHC 425 TR.3
LOPEZ PORTION SHC 425 TR.3
N 89°59'55" W 111.94
N 54°31'49" E 81.11
N 00°29'33" E
366.70
N 00°27'39" E
900.60
S 38°51'20" W 35.70
648.74
N 54°10'57" W 759.80
S 38°58'41" W
431.62
S 09°00'29" W 228.58
831.17
N 14°09'43" W 171.98
S 00°29'33" W 114.00
S 89°27'11" E 111.84
S 00°27'18" W 118.00
S 89°32'42" W 118.00
S 00°27'18" E 118.00
S 89°32'42" E 118.00

# PRELIMINARY PLAT OF
# CAJA DEL ORO SUBDIVISION
# FOR
# PULTE HOMES OF NEW MEXICO

COMPRIMISING TRACT 4-5

LYING WITHIN SECTION 31 , T17N, R9E, NMPM,
SANTA FE COUNTY, NEW MEXICO.


*RICK CHATROOP*
*PROFESSIONAL LAND SURVEYOR*
*NEW MEXICO REGISTRATION NO. 11011*
*(505) 470-0037  110 WAGON TRAIL RD.  CERRILLOS, NM. 87010*


INDEXING INFORMATION FOR THE COUNTY CLERK

OWNER: PULTE HOMES OF NEW MEXICO, INC.

UPCPS: TRACT 4-5 UPC#1-049-097-000-000

LOCATION: LYING WITHIN SECTION 31, T17N, R9E, NMPM, CITY OF SANTA FE, SANTA FE COUNTY, NEW MEXICO

SHEET 3

| LINE TABLE | | |
|---|---|---|
| LINE | LENGTH | BEARING |
| L1 | 20.00 | S51°02'22"E |
| L2 | 29.13 | S00°08'37"W |
| L3 | 4.78 | S75°36'20"W |
| L4 | 2.83 | S38°57'38"W |
| L5 | 7.50 | S47°42'04"E |
| L6 | 38.84 | S38°57'38"W |
| L7 | 11.84 | N00°27'18"E |
| L8 | 9.88 | S00°25'42"W |
| L9 | 9.88 | N89°34'19"E |
| L10 | 10.00 | S54°41'03"E |
| L11 | 13.95 | S59°07'45"E |
| L12 | 19.72 | N54°10'57"W |
| L13 | 17.68 | S54°10'57"E |
| L14 | 17.00 | S54°10'57"E |
| L15 | 17.00 | S54°10'57"E |
| L16 | 28.86 | S54°10'57"E |
| L17 | 4.86 | N01°37'52"E |
| L18 | 2.41 | N01°37'52"E |
| L19 | 45.19 | N09°00'29"E |
| L20 | 9.60 | S55°36'38"W |
| L21 | 9.56 | S55°36'38"W |
| L22 | 0.97 | S90°00'00"E |
| L23 | 23.79 | N39°49'03"E |
| L24 | 44.00 | N39°49'03"E |
| L25 | 71.51 | N90°00'00"W |
| L26 | 13.54 | N70°11'32"W |
| L27 | 13.02 | N54°10'57"W |
| L28 | 13.02 | N54°10'57"W |
| L29 | 82.37 | S47°42'04"E |
| L30 | 87.49 | N13°47'00"E |
| L31 | 44.18 | S30°29'33"W |
| L32 | 20.00 | S30°29'33"W |
| L33 | 2.00 | N89°30'27"W |
| L34 | 16.00 | N00°29'33"E |
| L35 | 18.00 | N89°30'27"W |
| L36 | 18.93 | N00°29'33"E |
| L37 | 6.26 | S33°37'38"W |
| L38 | 44.27 | S33°37'38"W |
| L39 | 7.25 | N00°27'18"E |
| L40 | 147.00 | N00°27'18"E |
| L41 | 9.00 | S89°32'42"E |
| L42 | 9.00 | N51°02'22"W |
| L43 | 4.39 | S38°57'38"W |
| L44 | 14.00 | S38°57'38"W |
| L45 | 9.80 | S38°32'45"E |
| L46 | 7.50 | N00°27'18"E |
| L47 | 2.75 | N00°27'18"E |
| L48 | 8.77 | S32°28'03"W |
| L49 | 84.00 | S32°28'03"W |
| L50 | 8.95 | S32°28'03"W |
| L51 | 6.23 | S54°10'57"E |
| L52 | 4.89 | N47°02'22"W |
| L53 | 14.57 | S59°07'45"E |
| L54 | 20.00 | N35°49'03"E |
| L55 | 3.37 | N35°49'03"E |
| L56 | 20.00 | S54°10'57"E |
| L57 | 11.27 | N01°37'52"E |
| L58 | 41.60 | N72°53'12"W |
| L59 | 44.06 | N44°06'46"E |
| L60 | 13.06 | S75°53'12"E |
| L61 | 10.69 | S00°01'21"W |
| L62 | 94.00 | N89°58'39"W |
| L63 | 10.96 | N00°01'21"E |
| L64 | 4.40 | N35°49'03"E |
| L65 | 10.92 | N35°49'03"E |
| L66 | 11.20 | S54°10'57"E |
| L67 | 10.82 | S35°49'03"W |
| L68 | 16.00 | N90°00'00"E |
| L69 | 16.00 | N35°49'03"E |
| L70 | 103.00 | N54°10'57"W |
| L71 | 15.73 | S35°49'03"W |

| CURVE TABLE | | | | | |
|---|---|---|---|---|---|
| CURVE | ARC | RADIUS | CHORD | LENGTH | DELTA |
| C1 | 5.87 | 50.00 | S42°19'16"W | 5.86 | 6°43'17" |
| C2 | 29.13 | 30.00 | S67°36'37"W | 28.00 | 55°38'02" |
| C3 | 4.78 | 50.00 | S77°36'20"W | 4.78 | 5°28'38" |
| C4 | 5.35 | 50.00 | S80°12'34"W | 5.35 | 6°08'02" |
| C5 | 31.14 | 50.00 | S21°07'06"W | 30.64 | 35°41'03" |
| C6 | 14.66 | 50.00 | S47°21'32"W | 14.61 | 16°47'49" |
| C7 | 6.28 | 4.00 | S45°29'33"W | 5.66 | 90°00'00" |
| C8 | 2.73 | 25.00 | S35°49'36"W | 2.73 | 6°16'04" |
| C9 | 29.12 | 25.00 | S30°40'53"E | 27.51 | 66°44'24" |
| C10 | 5.36 | 100.00 | N02°20'39"W | 5.36 | 3°04'08" |
| C11 | 34.57 | 100.00 | N21°04'39"W | 34.40 | 19°48'31" |
| C12 | 20.29 | 100.00 | N17°22'53"E | 20.26 | 11°37'41" |
| C13 | 20.81 | 325.00 | N02°17'23"E | 20.81 | 3°40'01" |
| C14 | 30.08 | 325.00 | N06°46'33"E | 30.07 | 5°18'10" |
| C15 | 28.37 | 443.00 | N02°17'23"E | 28.37 | 3°40'01" |
| C16 | 41.00 | 443.00 | N06°46'33"E | 40.99 | 5°18'10" |
| C17 | 30.08 | 325.00 | N30°10'57"E | 30.07 | 5°18'10" |
| C18 | 41.00 | 443.00 | N12°04'43"E | 40.99 | 5°18'10" |
| C19 | 30.08 | 325.00 | N17°22'53"E | 30.07 | 5°18'10" |
| C20 | 41.00 | 443.00 | N17°22'53"E | 40.99 | 5°18'10" |
| C21 | 30.08 | 325.00 | N22°41'03"E | 30.07 | 5°18'10" |
| C22 | 41.00 | 443.00 | N22°41'03"E | 40.99 | 5°18'10" |
| C23 | 28.06 | 325.00 | N33°20'39"E | 28.05 | 4°56'48" |
| C24 | 29.27 | 25.00 | N39°49'03"E | 27.76 | 67°04'24" |
| C25 | 2.59 | 30.00 | N56°39'21"W | 2.59 | 4°56'48" |
| C26 | 44.00 | 25.00 | N18°05'48"W | 38.54 | 100°50'26" |
| C27 | 16.77 | 275.00 | N34°04'14"E | 16.77 | 3°29'37" |
| C28 | 39.27 | 25.00 | N80°49'03"E | 35.36 | 90°00'00" |
| C29 | 11.33 | 325.00 | S67°31'07"E | 11.33 | 1°59'49" |
| C30 | 32.46 | 325.00 | S63°39'33"E | 32.44 | 5°43'29" |
| C31 | 39.27 | 25.00 | S39°49'03"W | 35.36 | 90°00'00" |
| C32 | 5.44 | 325.00 | S54°39'44"E | 5.44 | 0°57'24" |
| C33 | 39.27 | 25.00 | N89°10'57"W | 35.36 | 90°00'00" |
| C34 | 39.27 | 25.00 | N80°49'03"E | 35.36 | 90°00'00" |
| C35 | 12.06 | 50.00 | N61°05'36"W | 12.03 | 13°49'17" |
| C36 | 3.71 | 50.00 | S33°41'24"W | 3.71 | 4°15'17" |
| C37 | 26.12 | 50.00 | S16°39'49"W | 25.82 | 29°55'54" |
| C38 | 23.64 | 50.00 | S06°49'03"W | 23.42 | 27°05'00" |
| C39 | 32.00 | 874.93 | S25°06'25"W | 32.00 | 2°05'45" |
| C40 | 32.01 | 874.93 | S33°00'39"W | 32.01 | 2°05'47" |
| C41 | 32.07 | 874.93 | S30°54'46"W | 32.06 | 2°06'00" |
| C42 | 32.16 | 874.93 | S28°48'35"W | 32.16 | 2°06'22" |
| C43 | 35.17 | 874.93 | S26°36'18"W | 35.17 | 2°18'11" |
| C44 | 4.11 | 874.93 | S24°06'27"W | 4.11 | 0°16'09" |
| C45 | 8.53 | 25.00 | S30°02'54"W | 8.49 | 19°32'35" |
| C46 | 21.77 | 368.41 | S30°02'54"W | 21.77 | 3°23'39" |
| C47 | 30.25 | 368.41 | S24°16'47"W | 30.25 | 4°42'40" |
| C48 | 40.50 | 874.93 | S20°31'47"W | 40.50 | 2°39'09" |
| C49 | 40.27 | 874.93 | S17°53'05"W | 40.27 | 2°38'15" |
| C50 | 30.26 | 368.41 | S19°28'07"W | 30.25 | 4°42'40" |
| C51 | 30.25 | 368.41 | S14°39'27"W | 30.25 | 4°42'40" |
| C52 | 40.23 | 874.93 | S13°45'35"W | 40.23 | 2°38'09" |
| C53 | 40.38 | 874.93 | S12°36'34"W | 40.37 | 2°38'39" |
| C54 | 30.26 | 368.41 | S09°50'47"W | 30.25 | 4°42'40" |
| C55 | 30.26 | 368.41 | S05°08'08"W | 30.25 | 4°42'40" |
| C56 | 34.52 | 874.93 | S10°09'26"W | 34.51 | 2°15'37" |
| C57 | 7.70 | 368.41 | S02°01'05"W | 7.70 | 1°13'26" |
| C58 | 21.08 | 50.00 | S10°40'16"E | 20.92 | 24°09'35" |
| C59 | 7.98 | 50.00 | N68°13'57"E | 7.97 | 9°08'45" |
| C60 | 7.98 | 50.00 | N68°13'57"E | 7.97 | 9°08'45" |
| C61 | 22.03 | 50.00 | N68°13'57"E | 21.85 | 25°14'37" |
| C62 | 5.08 | 50.00 | S48°43'51"E | 5.07 | 5°49'04" |
| C63 | 33.48 | 50.00 | S70°49'12"E | 32.85 | 38°21'37" |
| C64 | 2.21 | 100.00 | N89°22'05"E | 2.21 | 1°15'50" |
| C65 | 32.76 | 100.00 | N79°22'01"E | 32.56 | 18°44'18" |
| C66 | 22.44 | 100.00 | N61°14'55"E | 22.39 | 12°51'40" |
| C67 | 22.21 | 100.00 | N42°10'49"E | 22.16 | 12°43'32" |
| C68 | 17.82 | 25.00 | S56°14'15"W | 17.44 | 40°50'24" |
| C69 | 59.42 | 50.00 | N55°57'27"E | 55.98 | 68°05'05" |
| C70 | 24.08 | 50.00 | N08°07'07"E | 23.85 | 27°35'36" |
| C71 | 13.77 | 431.00 | S21°50'16"W | 13.77 | 1°49'51" |
| C72 | 30.40 | 443.00 | N21°12'00"W | 30.40 | 3°55'56" |
| C73 | 41.00 | 443.00 | N16°04'43"E | 40.99 | 5°18'10" |
| C74 | 41.00 | 443.00 | N31°07'12"W | 40.99 | 5°18'10" |
| C75 | 23.41 | 50.00 | N19°05'34"W | 23.20 | 26°49'45" |
| C76 | 7.17 | 325.00 | N33°08'22"W | 7.17 | 1°15'51" |
| C77 | 30.08 | 325.00 | N36°25'22"W | 30.07 | 5°18'10" |
| C78 | 41.00 | 443.00 | N36°25'22"W | 40.99 | 5°18'10" |
| C79 | 41.00 | 443.00 | N43°22'32"W | 40.99 | 5°18'10" |
| C80 | 30.08 | 325.00 | N43°22'32"W | 30.07 | 5°18'10" |
| C81 | 41.00 | 443.00 | N48°41'02"W | 40.99 | 5°18'10" |
| C82 | 16.15 | 325.00 | N52°45'32"W | 16.15 | 2°50'51" |
| C83 | 41.00 | 443.00 | N48°41'02"W | 40.99 | 5°18'10" |
| C84 | 39.27 | 25.00 | S80°49'03"W | 35.36 | 90°00'00" |
| C85 | 39.27 | 25.00 | S09°10'57"E | 35.36 | 90°00'00" |
| C86 | 17.85 | 30.00 | N30°39'32"W | 17.58 | 34°05'04" |
| C87 | 4.14 | 2.00 | N59°28'22"W | 3.46 | 118°55'00" |
| C88 | 4.19 | 2.00 | N59°28'22"W | 3.46 | 119°55'00" |
| C89 | 32.37 | 25.00 | S23°28'21"W | 30.15 | 74°10'43" |
| C90 | 7.93 | 50.00 | S60°18'07"W | 7.92 | 9°05'21" |
| C91 | 20.14 | 50.00 | S76°23'00"W | 20.00 | 23°04'26" |
| C92 | 80.78 | 50.00 | N45°47'37"W | 72.28 | 92°34'20" |
| C93 | 95.12 | 50.00 | N54°59'27"E | 81.41 | 108°59'48" |
| C94 | 39.27 | 25.00 | N39°49'03"E | 35.36 | 90°00'00" |
| C95 | 61.74 | 25.00 | N71°17'32"W | 47.20 | 141°29'41" |
| C96 | 42.20 | 275.00 | N04°51'04"E | 42.16 | 8°47'32" |
| C97 | 44.73 | 25.00 | N60°30'17"E | 39.00 | 102°30'53" |
| C98 | 14.45 | 275.00 | S66°43'59"E | 14.44 | 3°00'35" |
| C99 | 78.25 | 50.00 | S09°21'02"E | 70.50 | 89°39'51" |
| C100 | 20.14 | 50.00 | S14°23'46"E | 20.00 | 23°04'26" |
| C101 | 24.30 | 50.00 | S36°25'01"E | 24.06 | 27°50'26" |
| C102 | 11.35 | 325.00 | N25°51'21"E | 11.35 | 2°00'25" |
| C103 | 4.32 | 50.00 | N65°39'21"W | 4.32 | 4°56'48" |
| C104 | 20.01 | 325.00 | N29°06'25"E | 20.01 | 3°31'41" |
| C105 | 17.90 | 30.00 | S18°43'27"W | 17.64 | 34°11'11" |
| C106 | 7.70 | 50.00 | N72°25'05"W | 7.70 | 8°49'41" |
| C107 | 20.14 | 50.00 | N88°22'08"W | 20.00 | 23°04'26" |
| C108 | 20.14 | 368.41 | S54°39'06"E | 20.02 | 3°07'42" |
| C110 | 87.59 | 50.00 | S70°42'59"W | 76.81 | 100°22'19" |
| C111 | 82.58 | 50.00 | S36°15'23"E | 73.51 | 94°37'59" |
| C112 | 45.30 | 50.00 | N61°46'25"E | 43.77 | 51°54'45" |
| C113 | 37.27 | 25.00 | N06°53'18"W | 33.91 | 85°24'41" |
| C114 | 22.61 | 25.00 | N77°26'17"W | 21.84 | 51°48'33" |
| C115 | 34.24 | 275.00 | N08°46'29"W | 34.22 | 7°08'04" |
| C117 | 105.12 | 50.00 | S29°46'18"E | 86.80 | 120°27'25" |


COUNTY OF SANTA FE )
STATE OF NEW MEXICO ) SS
I hereby certify that this instrument was filed for record on this ____ day of _____ A.D. 20__ at ____ o'clock ____ m. and was duly recorded in book ____ of The records of page____ Santa Fe County.

Witness my Hand and Seal of Office
Valerie Espinoza
County Clerk, Santa Fe County,N.M.

_____ Deputy



COUNTY OF SANTA FE )
STATE OF NEW MEXICO ) SS
I hereby certify that this instrument was filed for record on this ____ day of _____ A.D. 20__ at ____ o'clock ____ m. and was duly recorded in book ____ of The records of page____ Santa Fe County.

Witness
County Clerk, Santa Fe County,N.M.

_____ Deputy


CASE #2021-00 CAJA DEL ORO SUBDIVISION

FOR INFORMATION ONLY

| Project No. | Zone Map No. | Sheet |
|---|---|---|
| 04197.006 | J-14, K-14 | G-106 |

NAME: P:\04197 Pultte\04197.006 Pulte Caja del Oro\3. DWG\Sheets\Phase II\04197.6 Plat 1.dwg PLOT DATE: Dec 12, 2024 12:28pm

TRACT 4-5
16.21 AC.±

FOR INFORMATION ONLY

| Project No. | Zone Map No. | Sheet | of |
|---|---|---|---|
| 04197.006 | J-14, K-14 | C-107 | 44 |

NAME: P:\04197 Pulte\04197.006 Pulte Caja del Oro\3. DWG\Sheets\Phase II\C-107 Topo Survey.dwg PLOT DATE: Dec 12, 2024 12:28pm

## 25+00 TO 31+00

| LINE TABLE: ALIGNMENTS | | |
|---|---|---|
| LINE # | BEARING | LENGTH |
| L9 | S89°58'39"E | 86.42 |
| L10 | N35°49'03"E | 356.06 |
| L11 | N0°27'18"E | 191.73 |
| L12 | N51°02'22"W | 68.49 |

| CURVE TABLE: ALIGNMENTS | | | | | |
|---|---|---|---|---|---|
| CURVE # | ARC LENGTH | RADIUS | CHORD BEARING | CHORD LENGTH | DELTA ANGLE |
| C8 | 73.78 | 75.00 | S61°47'49"E | 70.84 | 56°21'40" |
| C9 | 70.95 | 75.00 | N62°55'12"E | 68.34 | 54°12'18" |
| C10 | 185.16 | 300.00 | N18°08'10"E | 182.23 | 35°21'45" |
| C11 | 67.41 | 75.00 | N25°17'32"W | 65.16 | 51°29'41" |

## 40+00 TO 49+00

| LINE TABLE: ALIGNMENTS | | |
|---|---|---|
| LINE # | BEARING | LENGTH |
| L21 | N69°12'26"W | 79.23 |
| L22 | N54°10'57"W | 37.38 |
| L23 | N38°57'38"E | 582.79 |

| CURVE TABLE: ALIGNMENTS | | | | | |
|---|---|---|---|---|---|
| CURVE # | ARC LENGTH | RADIUS | CHORD BEARING | CHORD LENGTH | DELTA ANGLE |
| C12 | 78.67 | 300.00 | N61°41'42"W | 78.44 | 15°01'29" |
| C13 | 121.92 | 75.00 | N7°36'40"W | 108.93 | 93°08'35" |

## 70+00 TO 73+50

| LINE TABLE: ALIGNMENTS | | |
|---|---|---|
| LINE # | BEARING | LENGTH |
| L24 | S54°10'57"E | 204.56 |
| L25 | S89°32'21"E | 107.96 |

| CURVE TABLE: ALIGNMENTS | | | | | |
|---|---|---|---|---|---|
| CURVE # | ARC LENGTH | RADIUS | CHORD BEARING | CHORD LENGTH | DELTA ANGLE |
| C14 | 37.03 | 60.00 | S71°51'39"E | 36.44 | 35°21'24" |

## 80+00 TO 82+25

| LINE TABLE: ALIGNMENTS | | |
|---|---|---|
| LINE # | BEARING | LENGTH |
| L26 | N38°57'38"E | 172.82 |
| L27 | N75°36'20"E | 66.60 |

| CURVE TABLE: ALIGNMENTS | | | | | |
|---|---|---|---|---|---|
| CURVE # | ARC LENGTH | RADIUS | CHORD BEARING | CHORD LENGTH | DELTA ANGLE |
| C15 | 25.58 | 40.09 | N57°16'59"E | 25.15 | 36°33'43" |

## 104+00 TO 108+00

| LINE TABLE: ALIGNMENTS | | |
|---|---|---|
| LINE # | BEARING | LENGTH |
| L13 | S3°20'39"E | 62.70 |
| L14 | S54°10'05"E | 391.76 |
| L15 | S35°49'03"W | 81.38 |
| L16 | S38°53'00"W | 148.21 |
| L17 | S32°53'26"W | 139.52 |
| L18 | S74°19'18"W | 134.59 |
| L19 | S81°10'11"W | 71.79 |

## 109+00 TO 111+63

| LINE TABLE: ALIGNMENTS | | |
|---|---|---|
| LINE # | BEARING | LENGTH |
| L28 | N8°16'16"W | 79.89 |
| L29 | N47°42'04"W | 162.19 |

| CURVE TABLE: ALIGNMENTS | | | | | |
|---|---|---|---|---|---|
| CURVE # | ARC LENGTH | RADIUS | CHORD BEARING | CHORD LENGTH | DELTA ANGLE |
| C16 | 20.65 | 30.00 | N27°59'10"W | 20.24 | 39°25'48" |

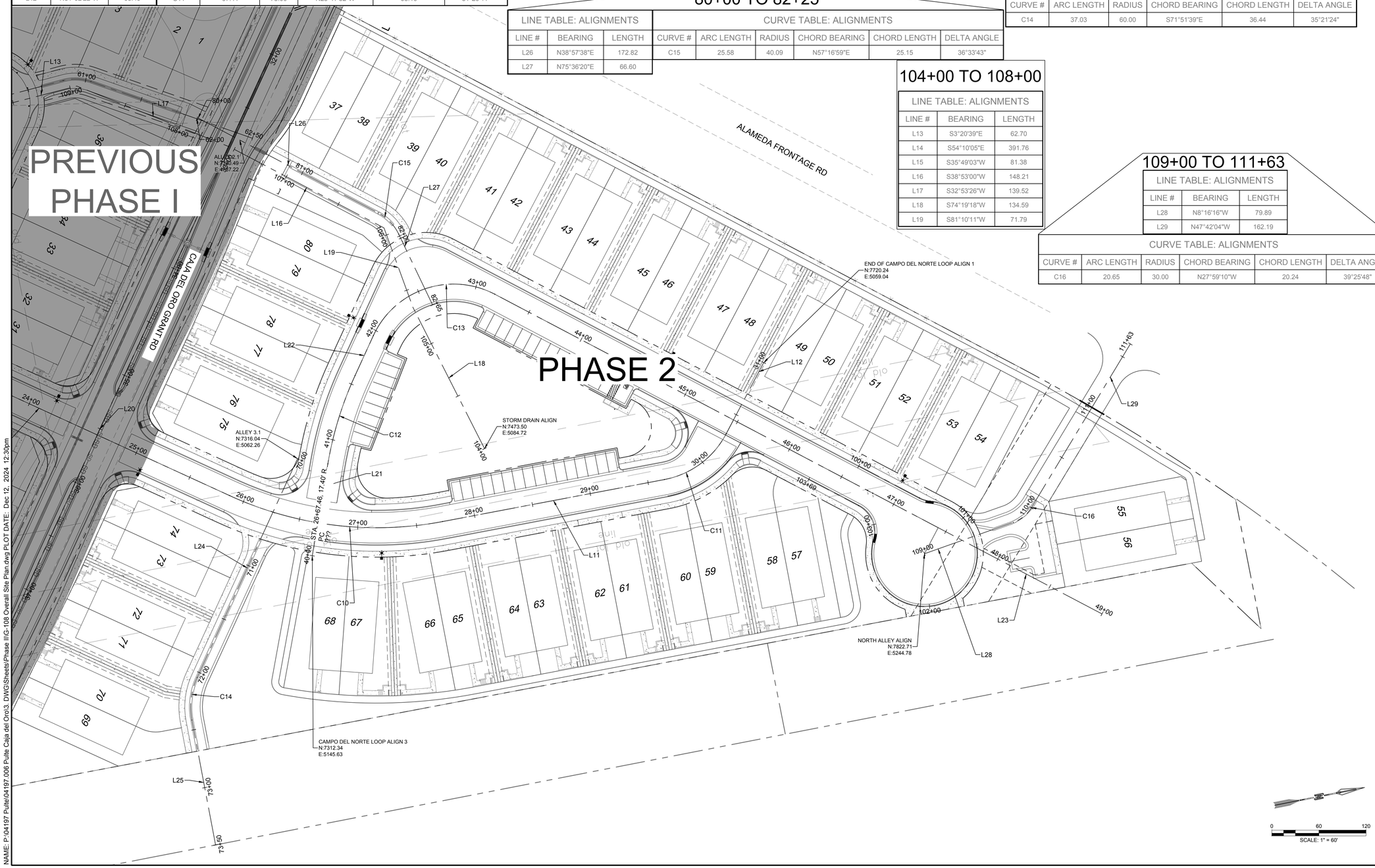


NAME: P:\04197 Pulte\04197.006 Pulte Caja del Oro\3. DWG\Sheets\Phase II\G-108 Overall Site Plan.dwg PLOT DATE: Dec 12, 2024 12:30pm

REVISION

DESIGNED SEG
DRAWN SEG
CHECKED JL
DATE 12.12.2024


COMMUNITY DESIGN SOLUTIONS
9384 Valley View Drive NW, Suite 100
Albuquerque, NM 87144
505.366.4187


STAMP

SHELDON E. GREER
NEW MEXICO
17154
06/08/2023
LICENSED PROFESSIONAL ENGINEER

THIS DRAWING IS INCOMPLETE AND NOT TO BE USED FOR CONSTRUCTION UNLESS IT IS STAMPED, SIGNED AND DATED

nm811 Know what's below. Call before you dig.

PROJ. #: 04197.006

PROJECT NAME: PULTE CAJA DEL ORO PHASE 2

SHEET TITLE: OVERALL SITE PLAN

SUBMITTED FOR: CONSTRUCTION

SHEET NUMBER: G-108

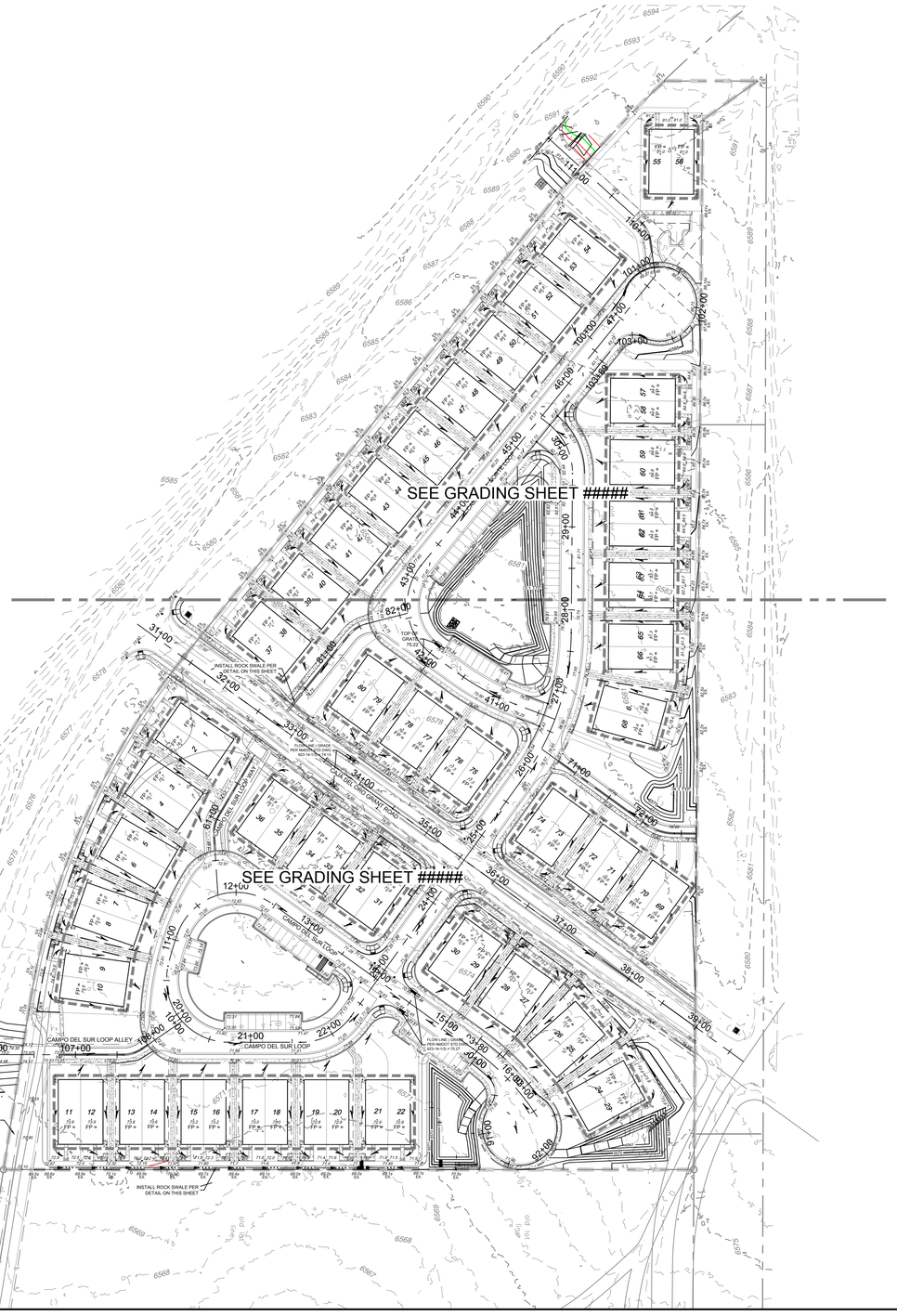


**NOTE:**

RETAINING WALLS RETAINING LESS THAN 2FT ARE NOT SHOWN, EXCEPT IN SOME CASES WHERE HOLDING UP STAIRS.

ROADWAY ELEVATIONS ON THE GRADING SHEETS ARE FOR MASS GRADING ONLY. DO NO CONSTRUCT CURB AND GUTTER USING ELEVATIONS FROM THE GRADING SHEETS. INSTEAD, REFER TO THE ROADWAY PLAN AND PROFILE SHEETS.

## LEGEND

- BACKYARD SLOPE (3:1 TYP. U.N.O.)
- DIRECTION OF FLOW
- PROPOSED SPOT ELEVATION — XX.XX
- TOP OF CURB OR FINISHED GROUND ELEVATION — XX.XX
- EXISTING MAJOR CONTOUR
- EXISTING MINOR CONTOUR
- PROPOSED MAJOR CONTOUR
- PROPOSED MINOR CONTOUR
- RIGHT OF WAY (ROW)
- PROPERTY LINE
- ROADWAY CENTERLINE
- LIMITS OF GRADING
- RETAINING WALL
- RETAINING WALL POINT — X-X
- LIMITS OF OVER EXCAVATION

DESIGNED SEG
DRAWN SEG
CHECKED JL
DATE 12.12.2024

COMMUNITY DESIGN SOLUTIONS
9384 Valley View Drive NW, Suite 100
Albuquerque, NM 87144
505.366.4187

REVISION

STAMP

SHELDON E. GREER — NEW MEXICO — 17154 — 10/10/2024 — PROFESSIONAL ENGINEER

THIS DRAWING IS INCOMPLETE AND NOT TO BE USED FOR CONSTRUCTION UNLESS IT IS STAMPED, SIGNED AND DATED

nm811 Know what's below. Call before you dig.

PROJ. #: 04197.006

PROJECT NAME: PULTE CAJA DEL ORO PHASE 2

SHEET TITLE: GRADING PLAN

SUBMITTED FOR: CONSTRUCTION

SHEET NUMBER: C-100

NAME: P:\04197 Pulte\04197.006 Pulte Caja del Oro\3. DWG\Sheets\Phase II\04197.6 Grading Plan.dwg PLOT DATE: Dec 12, 2024 12:30pm

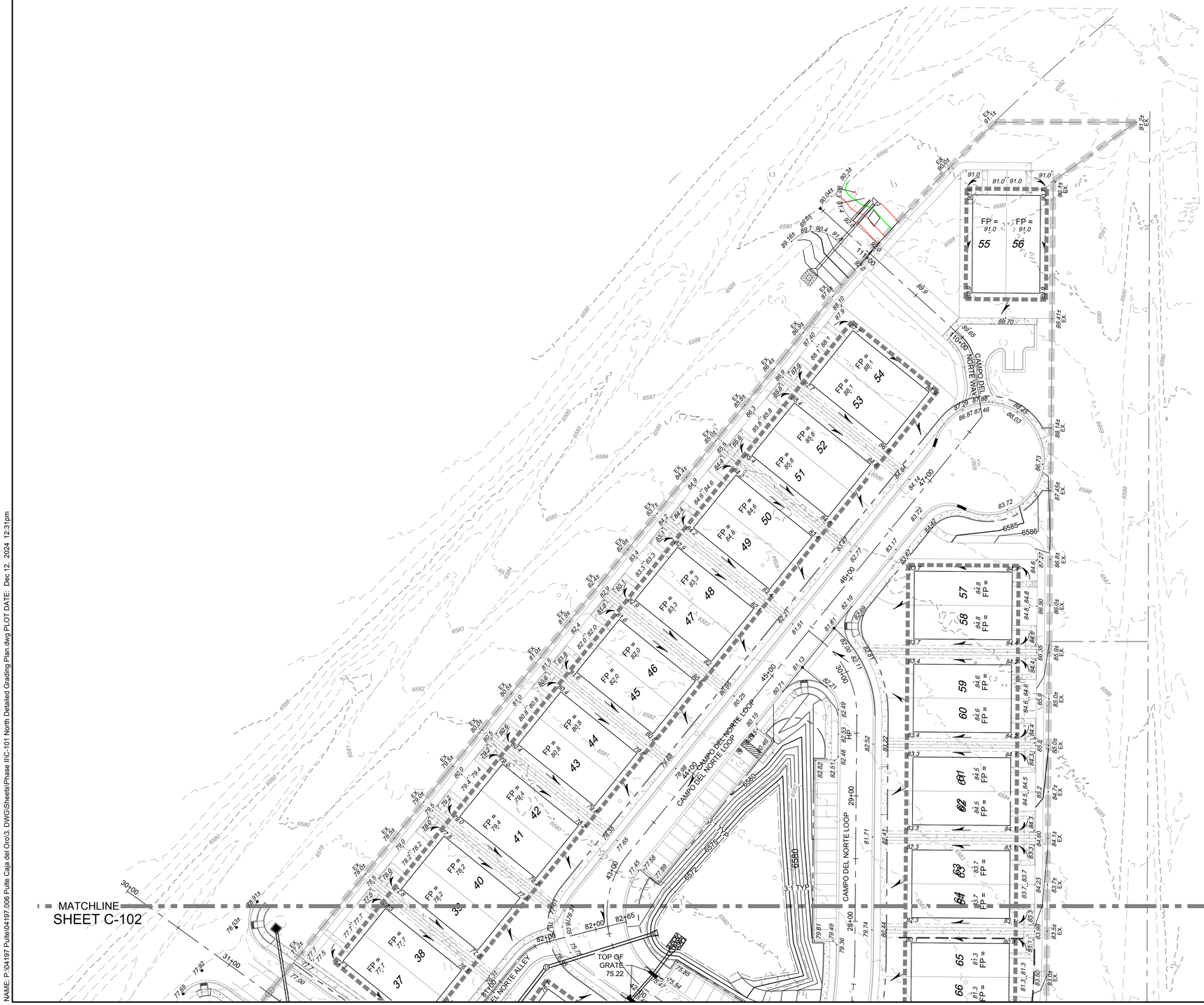


## LEGEND

- BACKYARD SLOPE (3:1 TYP. U.N.O.)
- DIRECTION OF FLOW
- PROPOSED SPOT ELEVATION — XX.XX
- TOP OF CURB OR FINISHED GROUND ELEVATION — XX.XX
- EXISTING MAJOR CONTOUR
- EXISTING MINOR CONTOUR
- PROPOSED MAJOR CONTOUR
- PROPOSED MINOR CONTOUR
- RIGHT OF WAY (ROW)
- PROPERTY LINE
- ROADWAY CENTERLINE
- LIMITS OF GRADING
- RETAINING WALL
- LIMITS OF OVER EXCAVATION
- PROPOSED SWALE

**NOTE:**

RETAINING WALLS RETAINING LESS THAN 2FT ARE NOT SHOWN, EXCEPT IN SOME CASES WHERE HOLDING UP STAIRS.

ROADWAY ELEVATIONS ON THE GRADING SHEETS ARE FOR MASS GRADING ONLY. DO NO CONSTRUCT CURB AND GUTTER USING ELEVATIONS FROM THE GRADING SHEETS. INSTEAD, REFER TO THE ROADWAY PLAN AND PROFILE SHEETS.

DESIGNED SEG
DRAWN SEG
CHECKED JL
DATE 12.12.2024

REVISION

COMMUNITY DESIGN SOLUTIONS
9384 Valley View Drive NW, Suite 100
Albuquerque, NM 87144
505.366.4187

STAMP

SHELDON E. GREER — NEW MEXICO — 17154 — CIVIL — PROFESSIONAL ENGINEER — 10/10/2024

THIS DRAWING IS INCOMPLETE AND NOT TO BE USED FOR CONSTRUCTION UNLESS IT IS STAMPED, SIGNED AND DATED

nm811 Know what's below. Call before you dig.

PROJ. #: 04197.006

PROJECT NAME: PULTE CAJA DEL ORO PHASE 2

SHEET TITLE: NORTH DETAILED GRADING PLAN

SUBMITTED FOR: CONSTRUCTION

SHEET NUMBER: C-101

NAME: P:\04197 Pulte\04197.006 Pulte Caja del Oro\3. DWG\Sheets\Phase II\C-101 North Detailed Grading Plan.dwg PLOT DATE: Dec 12, 2024 12:31pm

SHEET C-101
MATCHLINE

INSTALL ROCK SWALE PER DETAIL ON THIS SHEET

TOP OF GRATE 75.22

FLOW LINE ( GRADE PER NMDOT STD DWG 623-14-1/3) = 74.13

CAJA DEL ORO GRANT ROAD

CAMPO DEL SUR LOOP WAY

CAMPO DEL NORTE ALLEY

CAMPO DEL NORTE COURT

CAMPO DEL SUR LOOP

CAMPO DEL SUR LOOP ALLEY

FLOW LINE ( GRADE PER NMDOT STD DWG 623-14-1/3) = 70.27

INSTALL 3:1 FILL SLOPE (CONTOURS NOT SHOWN) FROM EDGE OF ACCESS ROAD TO EXISTING GROUND

INSTALL ROCK SWALE PER DETAIL ON THIS SHEET

## LEGEND

- BACKYARD SLOPE (3:1 TYP. U.N.O.)
- DIRECTION OF FLOW
- PROPOSED SPOT ELEVATION — XX.XX
- TOP OF CURB OR FINISHED GROUND ELEVATION — XX.XX
- EXISTING MAJOR CONTOUR
- EXISTING MINOR CONTOUR
- PROPOSED MAJOR CONTOUR
- PROPOSED MINOR CONTOUR
- RIGHT OF WAY (ROW)
- PROPERTY LINE
- ROADWAY CENTERLINE
- LIMITS OF GRADING
- RETAINING WALL
- LIMITS OF OVER EXCAVATION
- FLOWLINE OF SWALE

**NOTE:**

RETAINING WALLS RETAINING LESS THAN 2FT ARE NOT SHOWN, EXCEPT IN SOME CASES WHERE HOLDING UP STAIRS.

ROADWAY ELEVATIONS ON THE GRADING SHEETS ARE FOR MASS GRADING ONLY. DO NO CONSTRUCT CURB AND GUTTER USING ELEVATIONS FROM THE GRADING SHEETS. INSTEAD, REFER TO THE ROADWAY PLAN AND PROFILE SHEETS.

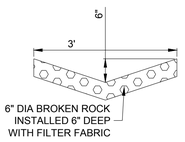


ROCK SWALE DETAIL

0 40 80
SCALE: 1" = 40'

| | |
|---|---|
| DESIGNED | SEG |
| DRAWN | SEG |
| CHECKED | JL |
| DATE | 12.12.2024 |

REVISION

COMMUNITY DESIGN SOLUTIONS
9384 Valley View Drive NW, Suite 100
Albuquerque, NM 87144
505.366.4187

STAMP

SHELDON E. GREER — NEW MEXICO — 17154 — REGISTERED PROFESSIONAL ENGINEER — 10/10/2024

THIS DRAWING IS INCOMPLETE AND NOT TO BE USED FOR CONSTRUCTION UNLESS IT IS STAMPED, SIGNED AND DATED

nm811 Know what's below. Call before you dig.

PROJ. #: 04197.006

PROJECT NAME: PULTE CAJA DEL ORO PHASE 2

SHEET TITLE: SOUTH DETAILED GRADING PLAN

SUBMITTED FOR: CONSTRUCTION

SHEET NUMBER: C-102

NAME: P:\04197 Pulte\04197.006 Pulte Caja del Oro\3. DWG\Sheets\Phase II\C-102 South Detailed Grading Plan.dwg PLOT DATE: Dec 12, 2024 12:31pm

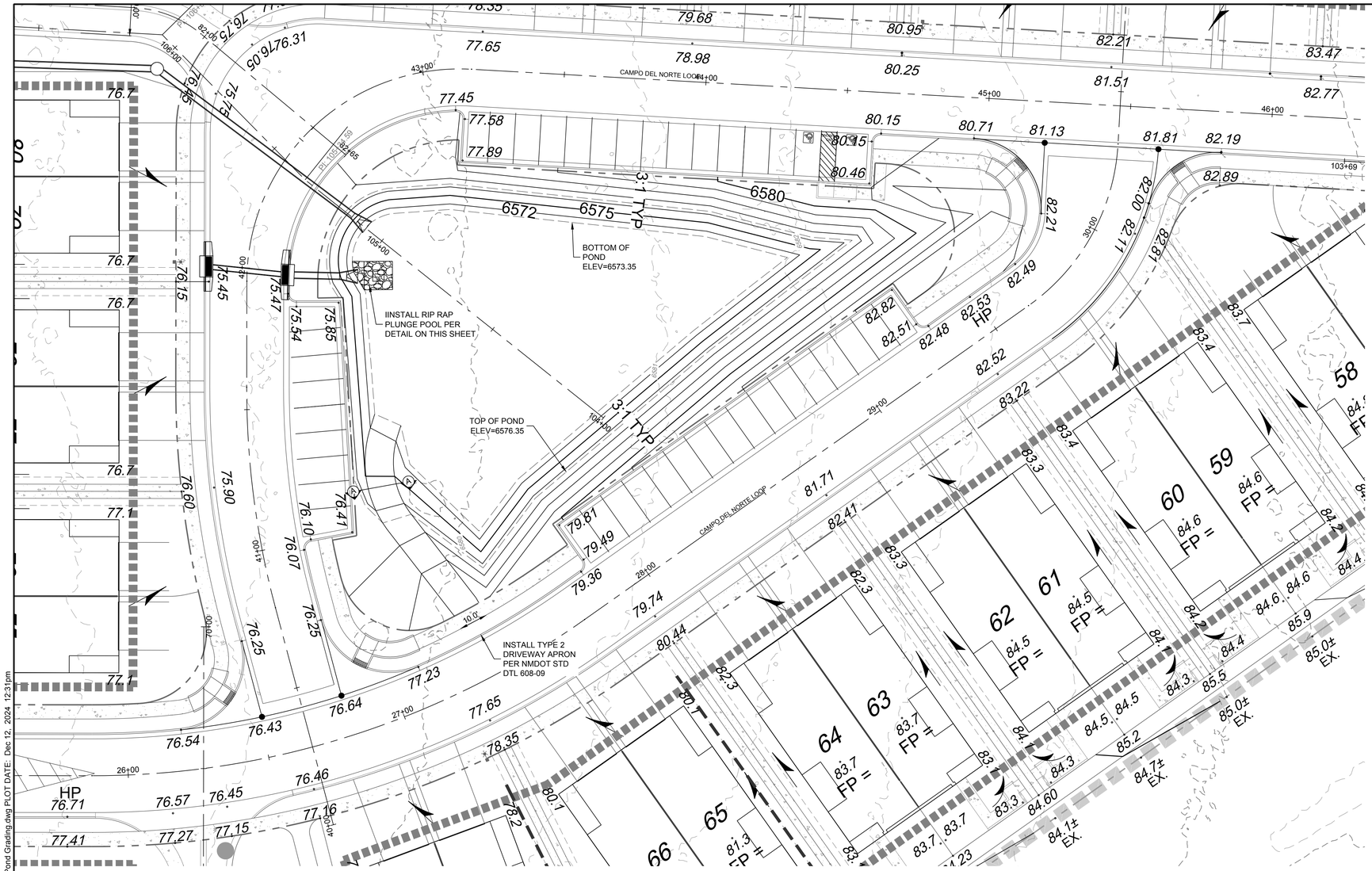


## LEGEND

- BACKYARD SLOPE (3:1 TYP. U.N.O.)
- DIRECTION OF FLOW
- PROPOSED SPOT ELEVATION — XX.XX
- TOP OF CURB OR FINISHED GROUND ELEVATION — XX.XX
- EXISTING MAJOR CONTOUR
- EXISTING MINOR CONTOUR
- PROPOSED MAJOR CONTOUR
- PROPOSED MINOR CONTOUR
- RIGHT OF WAY (ROW)
- PROPERTY LINE
- ROADWAY CENTERLINE
- LIMITS OF GRADING
- RETAINING WALL
- LIMITS OF OVER EXCAVATION
- 2" - 4" CRUSHED STONE

**NOTE:**

RETAINING WALLS RETAINING LESS THAN 2FT ARE NOT SHOWN, EXCEPT IN SOME CASES WHERE HOLDING UP STAIRS.

ROADWAY ELEVATIONS ON THE GRADING SHEETS ARE FOR MASS GRADING ONLY. DO NO CONSTRUCT CURB AND GUTTER USING ELEVATIONS FROM THE GRADING SHEETS. INSTEAD, REFER TO THE ROADWAY PLAN AND PROFILE SHEETS.

**POND INFORMATION**
DESIGN POND VOLUME: 0.806 AC-FT
POND DEPTH: 3'
TOP OF POND ELEVATION: 6576.35
100-YR 24-HR MAX WSEL: 1.87' ABOVE POND BOTTOM
100-YR 24-HR FREEBOARD: 1.13'

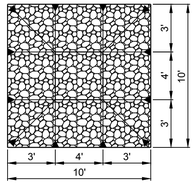


PLAN VIEW

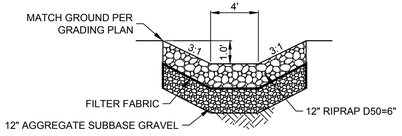


SECTION VIEW

RIPRAP PLUNGE POOL DETAIL

Scale: NTS

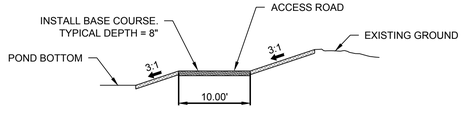


SECTION A-A: TYPICAL ACCESS ROAD SECTION

Scale: NTS

0 20 40
SCALE: 1" = 20'

| | |
|---|---|
| DESIGNED | SEG |
| DRAWN | SEG |
| CHECKED | JL |
| DATE | 12.12.2024 |

REVISION

COMMUNITY DESIGN SOLUTIONS
9384 Valley View Drive NW, Suite 100
Albuquerque, NM 87144
505.366.4187

STAMP

SHELDON E. GREER — NEW MEXICO — 17154 — LICENSED PROFESSIONAL ENGINEER — 06/06/2025

THIS DRAWING IS INCOMPLETE AND NOT TO BE USED FOR CONSTRUCTION UNLESS IT IS STAMPED, SIGNED AND DATED

nm811 Know what's below. Call before you dig.

PROJ. #: 04197.006

PROJECT NAME: PULTE CAJA DEL ORO PHASE 2

SHEET TITLE: NORTH POND GRADING PLAN

SUBMITTED FOR: CONSTRUCTION

SHEET NUMBER: #####

NAME: P:\04197 Pulte\04197.006 Pulte Caja del Oro\3. DWG\Sheets\Phase II\C-103C Pond Grading.dwg PLOT DATE: Dec 12, 2024 12:31pm

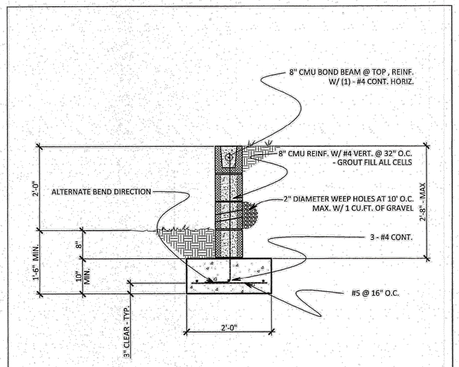


1 2'-0" CMU RETAINING WALL
3/4" = 1' - 0"

©Angelini, LLC
All rights reserved. All designs, drawings, plans & specifications are the property of Angelini, LLC. Purchaser's rights are conditional & limited to a one-time use to construct a single project on the site & use is limited specifically to such property. The use or reproduction of these plans concerning any other construction is strictly prohibited without the written permission of Angelini, LLC

DANTE ANGELINI NEW MEXICO 20353 PROFESSIONAL ENGINEER

01.08.2024

Angelini Engineers
255 YORKS XING
DRIFTWOOD, TEXAS 78619
PH: (512) 565-2396

CAJA DEL ORO SUBDIVISION
RETAINING WALLS
SANTA FE, NM

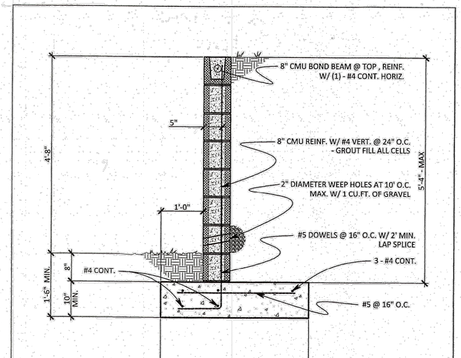


1 4'-8" CMU RETAINING WALL
3/4" = 1' - 0"

©Angelini, LLC
All rights reserved. All designs, drawings, plans & specifications are the property of Angelini, LLC. Purchaser's rights are conditional & limited to a one-time use to construct a single project on the site & use is limited specifically to such property. The use or reproduction of these plans concerning any other construction is strictly prohibited without the written permission of Angelini, LLC

DANTE ANGELINI NEW MEXICO 20353 PROFESSIONAL ENGINEER

01.08.2024

Angelini Engineers
255 YORKS XING
DRIFTWOOD, TEXAS 78619
PH: (512) 565-2396

CAJA DEL ORO SUBDIVISION
RETAINING WALLS
SANTA FE, NM

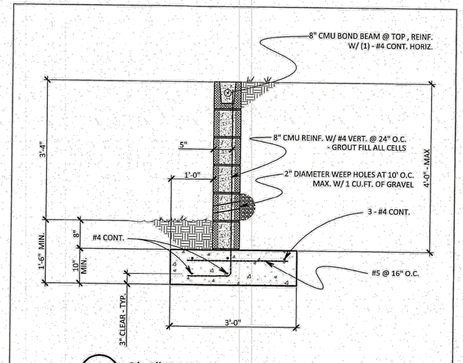


1 3'-4" CMU RETAINING WALL
3/4" = 1' - 0"

©Angelini, LLC
All rights reserved. All designs, drawings, plans & specifications are the property of Angelini, LLC. Purchaser's rights are conditional & limited to a one-time use to construct a single project on the site & use is limited specifically to such property. The use or reproduction of these plans concerning any other construction is strictly prohibited without the written permission of Angelini, LLC

DANTE ANGELINI NEW MEXICO 20353 PROFESSIONAL ENGINEER

01.08.2024

Angelini Engineers
255 YORKS XING
DRIFTWOOD, TEXAS 78619
PH: (512) 565-2396

CAJA DEL ORO SUBDIVISION
RETAINING WALLS
SANTA FE, NM

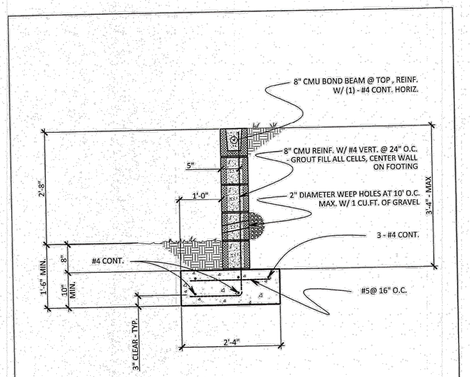


1 2'-8" CMU RETAINING WALL
3/4" = 1' - 0"

©Angelini, LLC
All rights reserved. All designs, drawings, plans & specifications are the property of Angelini, LLC. Purchaser's rights are conditional & limited to a one-time use to construct a single project on the site & use is limited specifically to such property. The use or reproduction of these plans concerning any other construction is strictly prohibited without the written permission of Angelini, LLC

DANTE ANGELINI NEW MEXICO 20353 PROFESSIONAL ENGINEER

01.08.2024

Angelini Engineers
255 YORKS XING
DRIFTWOOD, TEXAS 78619
PH: (512) 565-2396

CAJA DEL ORO SUBDIVISION
RETAINING WALLS
SANTA FE, NM

STRUCTURAL NOTES

DESIGN CRITERIA

1. THE WALLS AND FOOTINGS SHOWN IN THESE DRAWINGS HAVE BEEN DESIGNED TO MEET THE REQUIREMENTS LISTED IN THE 2021 INTERNATIONAL BUILDING CODE WITH REQUIRED AMENDMENTS.
2. RETAINING WALLS HAVE EEEN DESIGNED TO SUPPORT UP TO A 6'-0" TALL GARDEN WALL. WHERE GARDEN WALLS OCCUR, DOWEL VERTICAL WALL STEEL 24" MINIMUM INTO THE GARDEN WALL. THE GARDEN WALL IS ASSUMED TO BE COMPRISED OF 8" NOMINAL CMU REINFORCED WITH #4 @ 32" ON CENTER. EXTEND VERTICAL BARS TO SECOND TO TOP COURSE.
3. THE RETAINING WALLS AND FOUNDATION DESIGN ARE BASED ON THE GEOTECHNICAL INFORMATION PROVIDED BY NV5, INC., PROJECT NO. 444321-8320000.00, DATED MAY 17, 2021 WITH THE FOLLOWING DESIGN BASIS:
   - 3.1. ALLOWABLE BEARING PRESSURE = 2000 PSF BEARING 18 INCHES INTO COMPACTED SELECT FILL
   - 3.2. EQUIVALENT FLUID PRESSURE = 40 PSF (HYDROSTATIC PRESSURE NOT INCLUDED)
   - 3.3. PASSIVE PRESSURE = 400 PSF (STRUCTURAL FILL)
   - 3.4. COEFFICIENT OF FRICTION = 0.4

CONCRETE

1. PORTLAND CEMENT ASTM C 150, TYPE I/II
2. 28 DAY COMPRESSIVE STRENGTH OF CONCRETE F'c = 3000 PSI
3. 3-5 INCH SLUMP
4. MAXIMUM WATER TO CEMENT RATIO = 0.5
5. MAXIMUM AGGREGATE SIZE = 1 INCH
6. WATER SHALL CONFORM TO ASTM C 94 AND BE POTABLE

CONCRETE MASONRY UNITS (CMU)

1. THE NET AREA COMPRISSIVE STRENGTH FO MASONRY, F'M, SHALL BE A MINIMUM OF 1500 PSI AS DETERMINED BY THE UNIT STRENGTH METHOD.
2. MASONRY UNITS SHALL CONFORM TO ASTM C90 AND SHALL BE MEDIUM WEIGHT.
3. MORTAR SHALL BE TYPE S or M AND SHALL CONFORM TO ASTM C270 AND THE PROPORTION TABLE OF THE 2021 IBC.
4. 28 DAY COMPRESSIVE STRENGTH OF GROUT SHALL BE 2500 PSI
5. GROUT SHALL BE COURSE AND CONFORM TO ASTM C476 BY VOLUMETRIC PROPORTION. SLUMP SHALL BE WITHIN THE RANGE OF 8" to 11".
6. REINFORCING SHALL COMPLY WITH ASTM A615, GRADE 40
7. INSTALL CONTROL JOINTS WITH ONE VERTICAL BAR EACH SIDE OF JOINT AT A MAXIMUM SPACING OF 12'-0". AT BOND BEAMS DEBOND HORIZONTAL BARS.

©Angelini, LLC
All rights reserved. All designs, drawings, plans & specifications are the property of Angelini, LLC. Purchaser's rights are conditional & limited to a one-time use to construct a single project on the site & use is limited specifically to such property. The use or reproduction of these plans concerning any other construction is strictly prohibited without the written permission of Angelini, LLC

DANTE ANGELINI NEW MEXICO 20353 PROFESSIONAL ENGINEER

01.08.2024

Angelini Engineers
255 YORKS XING
DRIFTWOOD, TEXAS 78619
PH: (512) 565-2396

CAJA DEL ORO SUBDIVISION
RETAINING WALLS
SANTA FE, NM

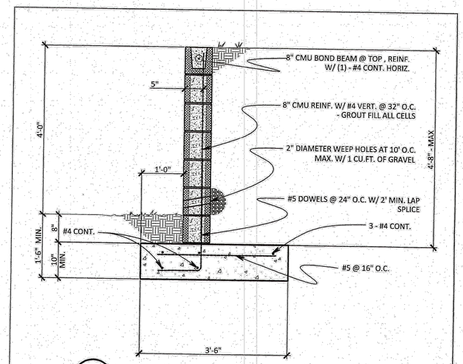


1 4'-0" CMU RETAINING WALL
3/4" = 1' - 0"

©Angelini, LLC
All rights reserved. All designs, drawings, plans & specifications are the property of Angelini, LLC. Purchaser's rights are conditional & limited to a one-time use to construct a single project on the site & use is limited specifically to such property. The use or reproduction of these plans concerning any other construction is strictly prohibited without the written permission of Angelini, LLC

DANTE ANGELINI NEW MEXICO 20353 PROFESSIONAL ENGINEER

01.08.2024

Angelini Engineers
255 YORKS XING
DRIFTWOOD, TEXAS 78619
PH: (512) 565-2396

CAJA DEL ORO SUBDIVISION
RETAINING WALLS
SANTA FE, NM

DESIGNED SEG
DRAWN SEG
CHECKED JL
DATE 12.12.2024

REVISION

COMMUNITY DESIGN SOLUTIONS
9384 Valley View Drive NW, Suite 100
Albuquerque, NM 87144
505.366.4187

STAMP

SHELDON E. GREER NEW MEXICO 17154 PROFESSIONAL ENGINEER
12/06/2023

THIS DRAWING IS INCOMPLETE AND NOT TO BE USED FOR CONSTRUCTION UNLESS IT IS STAMPED, SIGNED AND DATED

nm811 Know what's below. Call before you dig.

PROJ. #: 04197.006

PROJECT NAME: PULTE CAJA DEL ORO PHASE 2

SHEET TITLE: STRUCTURAL RETAINING WALL DETAIL

SUBMITTED FOR: CONSTRUCTION

SHEET NUMBER: C-104

NAME: P:\04197 Pulte\04197.006 Pulte Caja del Oro\3. DWG\Sheets\Phase II\C-105 Structural Retaining Wall Detail.dwg PLOT DATE: Dec 12, 2024 12:31pm

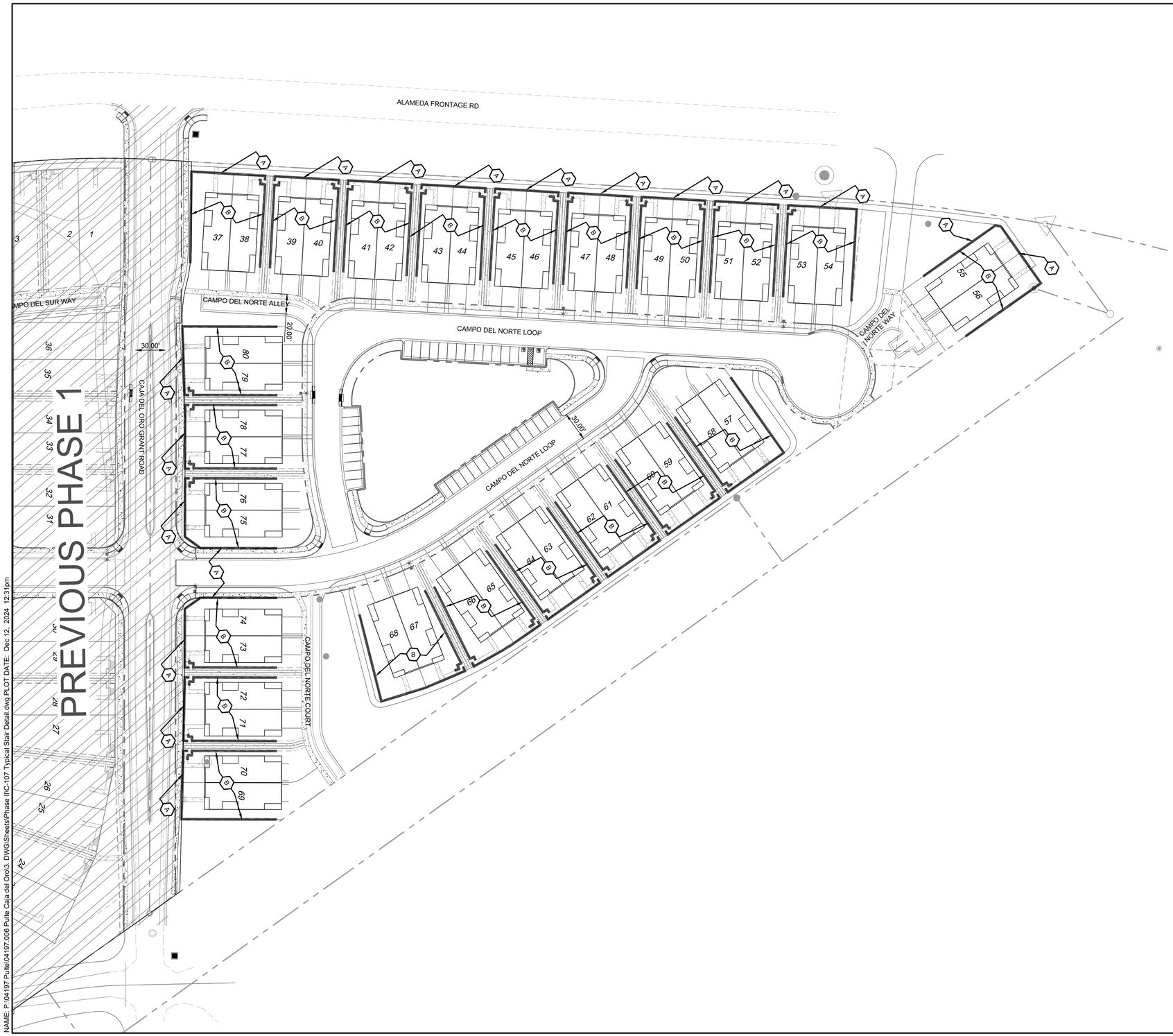


NAME: P:\04197 Pulte\04197.006 Pulte Caja del Oro\3. DWG\Sheets\Phase II\C-107 Typical Stair Detail.dwg PLOT DATE: Dec 12, 2024 12:31pm

## NOTES

- WALL AND FENCES: FOR ANY PROJECT TO WHICH THIS SUBSECTION 14-8.4(J) APPLIES, PUBLICLY VISIBLE WALLS AND FENCES SHALL BE WROUGHT IRON OR SIMULATED WROUGHT IRON, WOOD OR SIMULATED WOOD, CEDAR POLE, ADOBE, SPLIT-FACED CONCRETE BLOCK, STONE, STUCCO OR RECTANGULAR MESH WIRE ON WOODEN POSTS IN COMBINATION WITH VINES OR OTHER CLIMBING PLANT MATERIAL.

- RETAINING WALL / FENCE: ANY WALL OR FENCE THAT IS MORE THAN THREE (3) FEET IN HEIGHT ABOVE FINISH GRADE ON THE SIDE FACING THE STREET, SHALL BE SET BACK FROM THE STREET RIGHT OF WAY LINE A DISTANCE EQUAL TO OR GREATER THAT THE HEIGHT.

## LEGEND

- WALL(TYPE PER KEYED NOTE)
- RETAINING WALL, REFER TO GRADING PLAN
- POND PERIMETER FENCE, REFER TO LANDSCAPE PLAN
- SIDEWALK TO BE BUILT AT TIME OF HOUSE CONSTRUCTION
- SIDEWALK TO BE BUILT WITH ROADWAY CONSTRUCTION

## KEYED NOTES

A TAN 6' MAX HEIGHT SPLIT FACE CMU WALL

B TAN 6' MAX HEIGHT SMOOTH CMU WALL

0 50 100
SCALE: 1" = 50'

| | |
|---|---|
| DESIGNED | SEG |
| DRAWN | SEG |
| CHECKED | JL |
| DATE | 12.12.2024 |

REVISION

COMMUNITY DESIGN SOLUTIONS
9384 Valley View Drive NW, Suite 100
Albuquerque, NM 87144
505.366.4187

STAMP

SHELDON E. GREER NEW MEXICO 17154 PROFESSIONAL ENGINEER 12/12/2024

THIS DRAWING IS INCOMPLETE AND NOT TO BE USED FOR CONSTRUCTION UNLESS IT IS STAMPED, SIGNED AND DATED

nm811 Know what's below. Call before you dig.

PROJ. #: 04197.006

PROJECT NAME: PULTE CAJA DEL ORO PHASE 2

SHEET TITLE: PERIMETER WALL & FENCE PLAN

SUBMITTED FOR: CONSTRUCTION

SHEET NUMBER: C-105

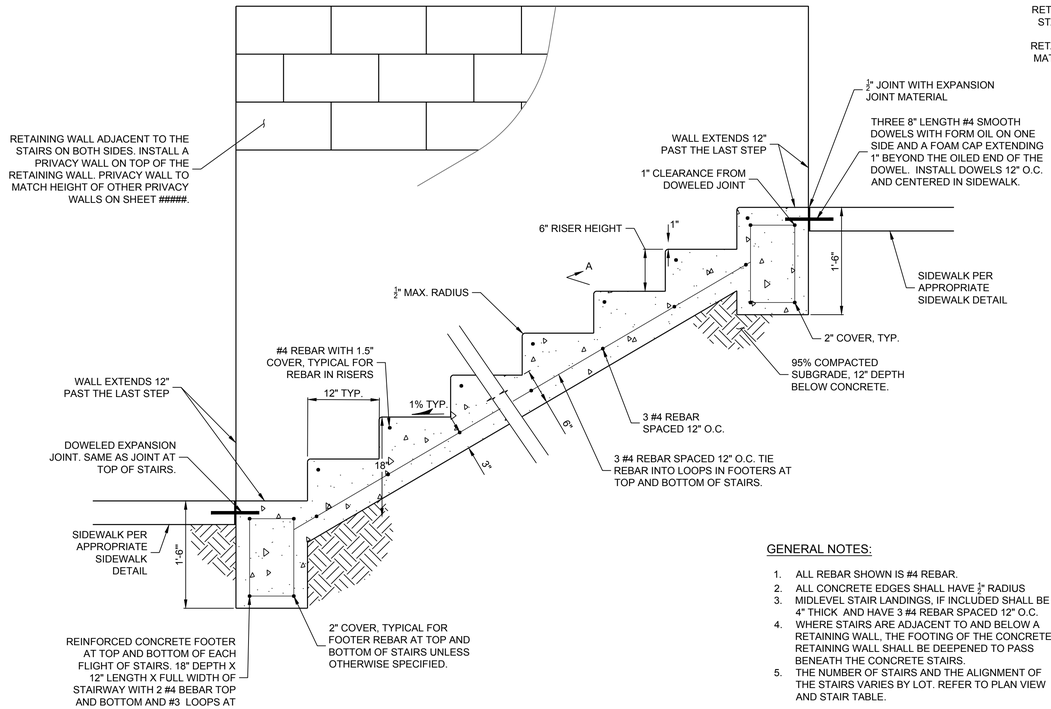


## STAIR ON GRADE DETAIL

Scale: NTS

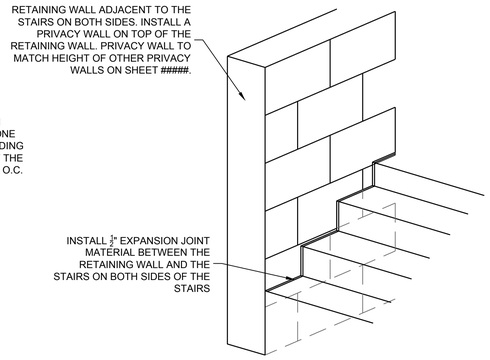


SECTION A:
CONCRETE STAIRS PARTIAL ISOMETRIC VIEW

## GENERAL NOTES:

1. ALL REBAR SHOWN IS #4 REBAR.
2. ALL CONCRETE EDGES SHALL HAVE ½" RADIUS
3. MIDLEVEL STAIR LANDINGS, IF INCLUDED SHALL BE 4" THICK AND HAVE 3 #4 REBAR SPACED 12" O.C.
4. WHERE STAIRS ARE ADJACENT TO AND BELOW A RETAINING WALL, THE FOOTING OF THE CONCRETE RETAINING WALL SHALL BE DEEPENED TO PASS BENEATH THE CONCRETE STAIRS.
5. THE NUMBER OF STAIRS AND THE ALIGNMENT OF THE STAIRS VARIES BY LOT. REFER TO PLAN VIEW AND STAIR TABLE.

## STAIR TABLE

Southern Meadows (Caja del Oro) - Phase 2

| Lot Number | Yard Landing Elev | Landing Elev at Public Sidewalk | Number of Steps |
|---|---|---|---|
| 37 | 77.8 | 78.0 | 0 |
| 38 | 77.8 | 78.4 | 1 |
| 39 | 78.3 | 78.4 | 0 |
| 40 | 78.3 | 79.4 | 2 |
| 41 | 79.5 | 79.4 | 0 |
| 42 | 79.5 | 80.4 | 2 |
| 43 | 80.9 | 80.4 | 1 |
| 44 | 80.9 | 81.4 | 1 |
| 45 | 82.1 | 81.4 | 1 |
| 46 | 82.1 | 82.8 | 4 |
| 47 | 83.4 | 82.8 | 1 |
| 48 | 83.4 | 84.1 | 1 |
| 49 | 84.7 | 84.1 | 1 |
| 50 | 84.7 | 85.4 | 1 |
| 51 | 85.9 | 85.4 | 1 |
| 52 | 85.9 | 86.8 | 2 |
| 53 | 88.2 | 86.8 | 3 |
| 54 | 88.2 | 87.8 | 1 |
| 55 | 91.1 | 91.5 | 1 |
| 56 | 91.1 | 92.0 | 2 |
| 57 | 84.9 | 86.9 | 4 |
| 58 | 84.9 | 86.3 | 3 |
| 59 | 84.7 | 86.3 | 3 |
| 60 | 84.7 | 85.4 | 1 |
| 61 | 84.6 | 85.4 | 2 |
| 62 | 84.6 | 84.5 | 1 |
| 63 | 83.8 | 84.5 | 1 |
| 64 | 83.8 | 83.9 | 1 |
| 65 | 81.4 | 83.9 | 5 |
| 66 | 81.4 | 81.4 | 0 |
| 67 | 79.5 | 81.4 | 4 |
| 68 | 79.5 | 79.0 | 1 |
| 69 | 79.5 | 77.9 | 3 |
| 70 | 79.5 | 77.6 | 4 |
| 71 | 78.7 | 77.6 | 2 |
| 72 | 78.7 | 77.1 | 3 |
| 73 | 78.1 | 77.1 | 2 |
| 74 | 78.1 | 76.6 | 3 |
| 75 | 77.4 | 75.9 | 3 |
| 76 | 77.4 | 75.6 | 4 |
| 77 | 77.0 | 75.6 | 3 |
| 78 | 77.0 | 75.3 | 3 |
| 79 | 77.0 | 75.3 | 3 |
| 80 | 77.0 | 75.4 | 3 |

NOTE:
THE ELEVATION OF THE YARD LANDING IN THE STAIR TABLE ASSUMES THAT THE TOP OF FINISHED PATIO IS 2" BELOW THE TOP OF FINISHED FLOOR AND THAT THAT THE TOP OF FINISHED FLOOR IS 6" ABOVE FINISHED PAD. CONTACT THE ENGINEER IF THIS IS NOT THE CASE.

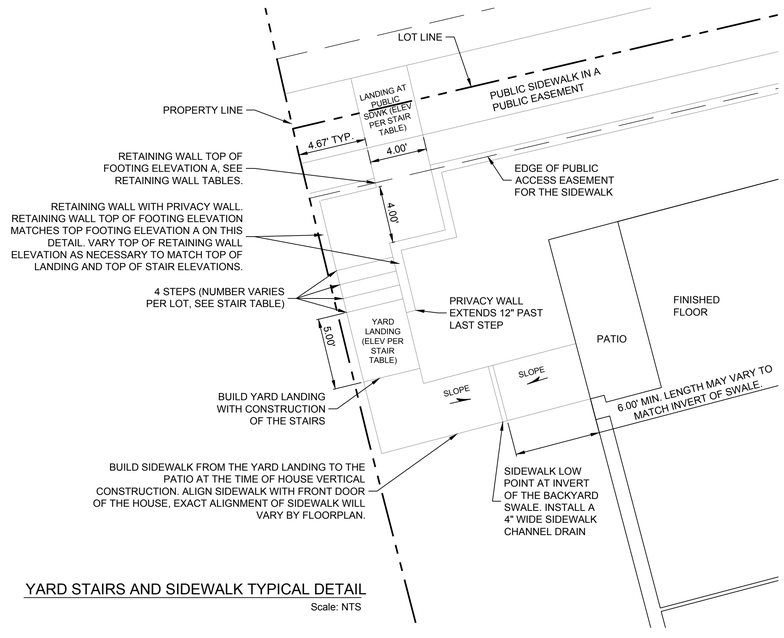


## YARD STAIRS AND SIDEWALK TYPICAL DETAIL

Scale: NTS

DESIGNED SEG
DRAWN SEG
CHECKED JL
DATE 12.12.2024

REVISION

COMMUNITY DESIGN SOLUTIONS
9384 Valley View Drive NW, Suite 100
Albuquerque, NM 87144
505.366.4187

STAMP

SHELDON E. GREER NEW MEXICO 17154 REGISTERED PROFESSIONAL ENGINEER 12/12/2024

THIS DRAWING IS INCOMPLETE AND NOT TO BE USED FOR CONSTRUCTION UNLESS IT IS STAMPED, SIGNED AND DATED

nm811 Know what's below. Call before you dig.

PROJ. #: 04197.006

PROJECT NAME: PULTE CAJA DEL ORO PHASE 2

SHEET TITLE: TYPICAL STAIR DETAIL

SUBMITTED FOR: CONSTRUCTION

SHEET NUMBER: C-106

NAME: P:\04197 Pulte\04197.006 Pulte Caja del Oro\3. DWG\Sheets\Phase II\C-107 Typical Stair Detail.dwg PLOT DATE: Dec 12, 2024 12:31pm

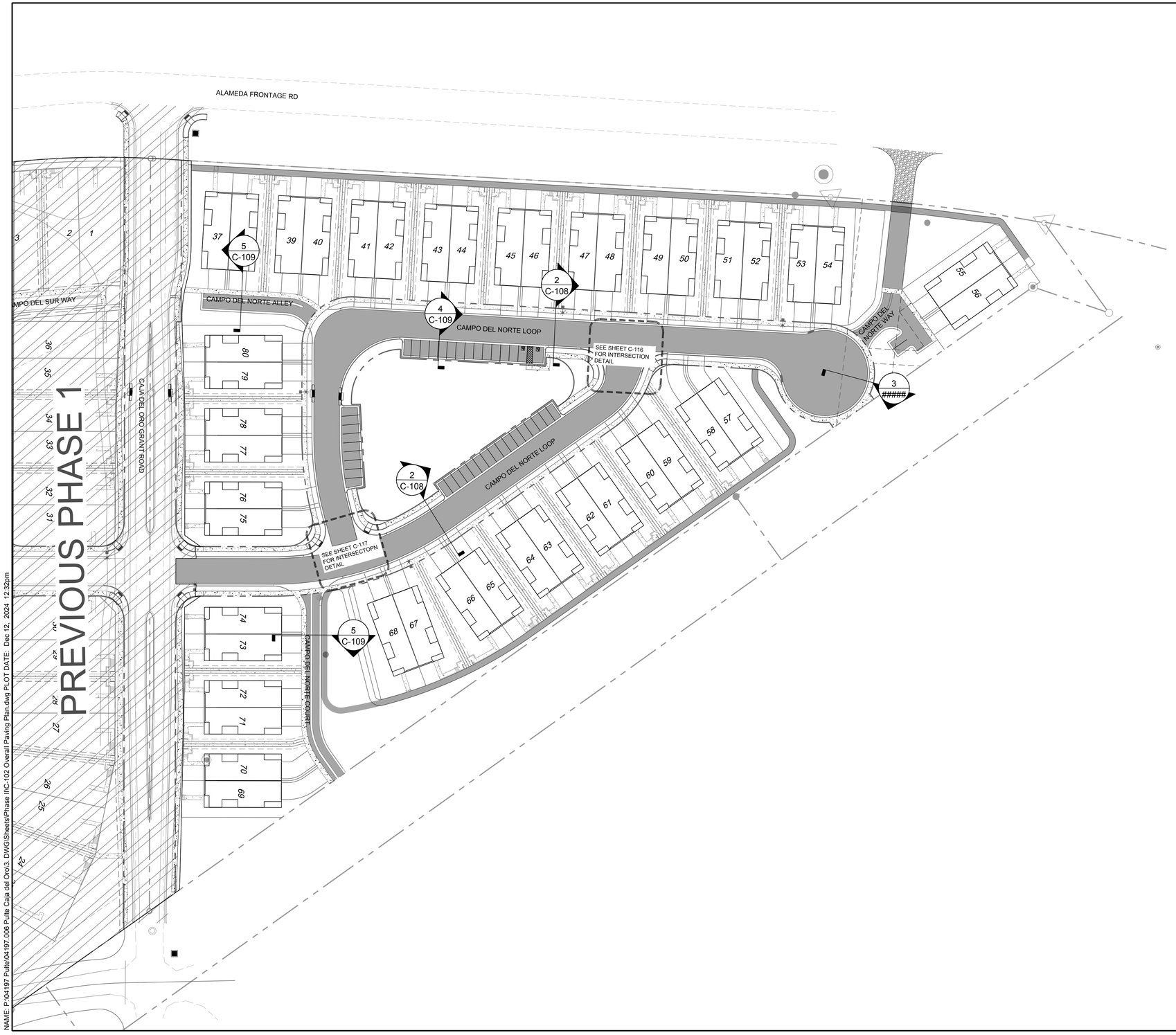


NAME: P:\04197 Pulte\04197.006 Pulte Caja del Oro\3. DWG\Sheets\Phase II\C-102 Overall Paving Plan.dwg PLOT DATE: Dec 12, 2024 12:32pm

GENERAL NOTES:

1. ALL CURVE DATA ON THE ROAD PLAN AND PROFILES REFERS TO THE FACE OF CURB UNLESS OTHERWISE NOTED.
2. ALL CURB RETURNS HAVE A 25' RADIUS AT THEORETICAL FACE OF CURB (FLOWLINE), UNLESS NOTED OTHERWISE.
3. CONTRACTOR TO FIELD VERIFY DRIVEWAY LOCATIONS PRIOR TO CONSTRUCTION.
4. CENTERLINE MONUMENTATION TO BE INSTALLED PER V.O.L.L. STANDARDS AS SHOWN ON THE SUBDIVISION PLAT.
5. SITE ACCESSIBILTY SHALL CONFORM TO NM DOT SERIAL PAD-001, SHEETS 1-10 AND N.M.A.D.A. SPECIFICATIONS.
6. ALL FUTURE SIDEWALKS (BY OTHERS) TO BE ADA COMPLIANT.

STREET LIGHTING NOTES:

1. THIS DRAWING SHOWS THE DESIRED STREET LIGHT LAYOUT ONLY. DESIGN OF THE ELECTRICAL WIRING AND APPURTENANCES REQUIRED TO COMPLETE THE SYSTEM WILL BE PROVIDED BY OTHERS.
2. STREET LIGHTS IN THE INTERIOR OF THE SUBDIVISION SHALL BE 100W HPS LIGHTS WITH 25' MOUNTING HEIGHT. THE STREET LIGHTS SHALL BE BRONZE SHOE BOX STYLE WITH CUTOFF FIXTURES.
3. ALL STREET LIGHTING MUST COMPLY WITH THE "NIGHT SKY PROTECTION ACT".

PHASE 2 PARKING COUNT:

| | |
|---|---|
| STANDARD PARKING STALLS: | 40 |
| HANDICAP/VAN ACCESSIBLE PARKING STALLS | 2 |
| TOTAL | 42 |

LEGEND

| | NEW | EXISTING |
|---|---|---|
| CURB & GUTTER | | |
| PAVEMENT EDGE | | |
| STREET LIGHT | | |
| STOP SIGN | | |
| TYPE III BARRICADE | | |
| CURB TRANSITION | | |
| NEW PAVEMENT AREA | | |
| SIDEWALK TO BE BUILT AT TIME OF HOUSE CONSTRUCTION | | |
| SIDEWALK TO BE BUILT WITH ROADWAY CONSTRUCTION | | |

CROSS SECTION NUMBER

X-XXX

SHEET NUMBER CONTAINING THE CROSS SECTION

*CURB STATIONING DETAIL*

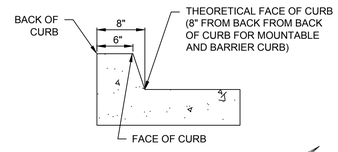


0 50 100

SCALE: 1" = 50'

| | |
|---|---|
| DESIGNED | SEG |
| DRAWN | SEG |
| CHECKED | JL |
| DATE | 12.12.2024 |

REVISION

COMMUNITY DESIGN SOLUTIONS
9384 Valley View Drive NW, Suite 100
Albuquerque, NM 87144
505.366.4187

STAMP

SHELDON E. GREER NEW MEXICO 17154 REGISTERED PROFESSIONAL ENGINEER 12/12/2024

THIS DRAWING IS INCOMPLETE AND NOT TO BE USED FOR CONSTRUCTION UNLESS IT IS STAMPED, SIGNED AND DATED

nm811 Know what's below. Call before you dig.

PROJ. #: 04197.006

PROJECT NAME: PULTE CAJA DEL ORO PHASE 2

SHEET TITLE: OVERALL PAVING PLAN

SUBMITTED FOR: CONSTRUCTION

SHEET NUMBER: C-107

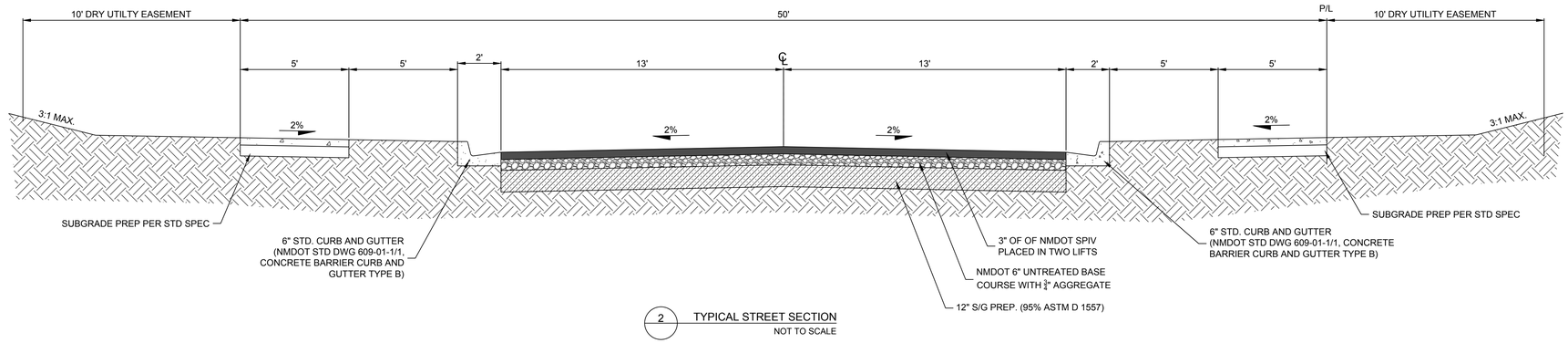


2 TYPICAL STREET SECTION
NOT TO SCALE

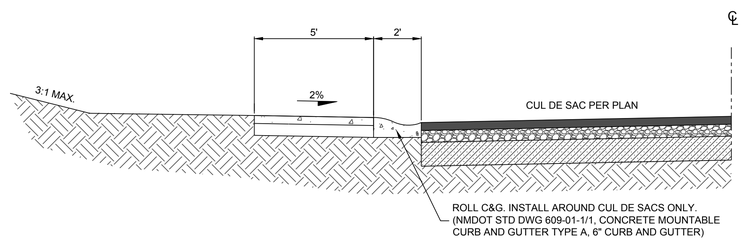


3 TYPICAL CUL DE SAC SECTION
NOT TO SCALE

NAME: P:\04197 Pulte\04197.006 Pulte Caja del Oro\3. DWG\Sheets\Phase II\C-111 Typical Alley and Lot Grading.dwg PLOT DATE: Dec 12, 2024 12:32pm

DESIGNED SEG
DRAWN SEG
CHECKED JL
DATE 12.12.2024

REVISION

COMMUNITY DESIGN SOLUTIONS
9384 Valley View Drive NW, Suite 100
Albuquerque, NM 87144
505.366.4187

STAMP

SHELDON E. GREER
NEW MEXICO
17154
REGISTERED PROFESSIONAL ENGINEER
10/10/2024

THIS DRAWING IS INCOMPLETE AND NOT TO BE USED FOR CONSTRUCTION UNLESS IT IS STAMPED, SIGNED AND DATED

nm811 Know what's below. Call before you dig.

PROJ. #: 04197.006

PROJECT NAME: PULTE CAJA DEL ORO PHASE 2

SHEET TITLE: ROAD CROSS SECTION 1

SUBMITTED FOR: CONSTRUCTION

SHEET NUMBER: C-108

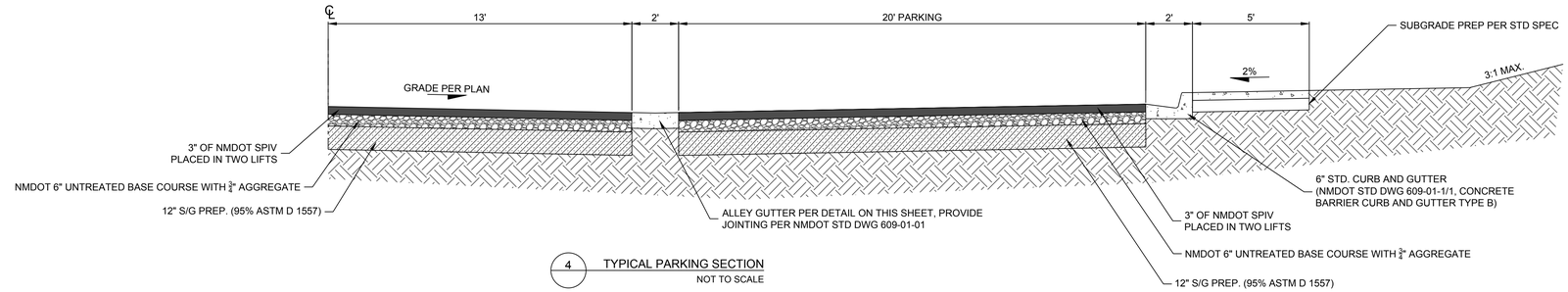


4 TYPICAL PARKING SECTION
NOT TO SCALE

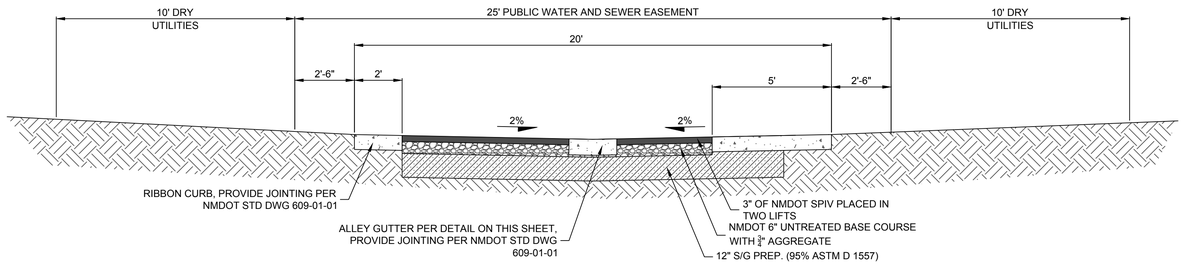


5 ALLEY CROSS SECTION
NOT TO SCALE

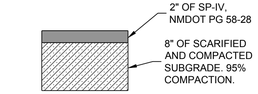


MULTIUSE TRAIL PAVEMENT SECTION
Scale: NTS

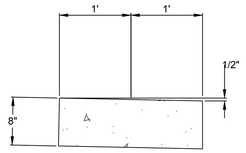


RIBBON CURB
Scale: NTS

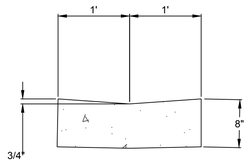


ALLEY GUTTER
Scale: NTS

| | |
|---|---|
| DESIGNED | SEG |
| DRAWN | SEG |
| CHECKED | JL |
| DATE | 12.12.2024 |

REVISION

COMMUNITY DESIGN SOLUTIONS
9384 Valley View Drive NW, Suite 100
Albuquerque, NM 87144
505.366.4187

STAMP

SHELDON E. GREER
NEW MEXICO
17154
REGISTERED PROFESSIONAL ENGINEER
10/10/2024

THIS DRAWING IS INCOMPLETE AND NOT TO BE USED FOR CONSTRUCTION UNLESS IT IS STAMPED, SIGNED AND DATED

nm811 Know what's below. Call before you dig.

PROJ. #: 04197.006

PROJECT NAME: PULTE CAJA DEL ORO PHASE 2

SHEET TITLE: ROAD CROSS SECTION 2

SUBMITTED FOR: CONSTRUCTION

SHEET NUMBER: C-109

NAME: P:\04197 Pulte\04197.006 Pulte Caja del Oro\3. DWG\Sheets\Phase II\C-111 Typical Alley and Lot Grading.dwg PLOT DATE: Dec 12, 2024 12:32pm

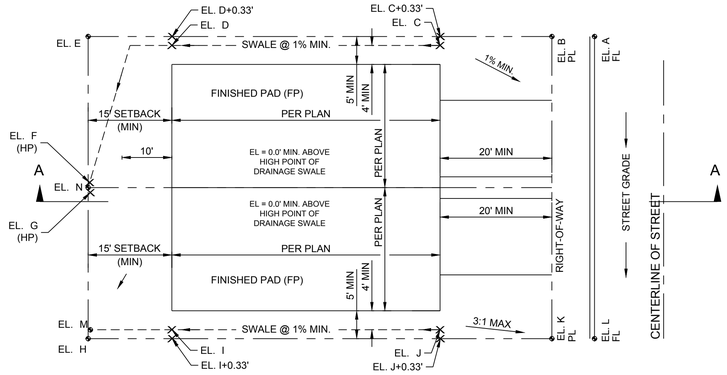


POINTS A, B, C, D, E, F, G, H, I, J, K, L, M, & N CORRESPOND TO ELEVATIONS DISPLAYED ON THE GRADING PLAN

A, L = FL C&G
B, K = PL/BACK OF SIDEWALK
C,D,F,I,J,M = FL SWALE
E,N,H = TOG @ EDGE OF SIDEWALK

TYPICAL LOT GRADING - DRAIN TO BACK
NOT TO SCALE

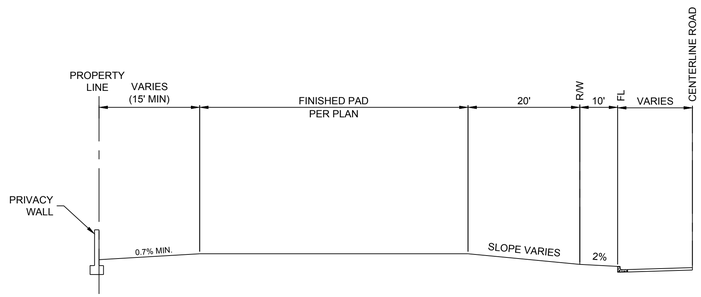


SECTION A-A
N.T.S.

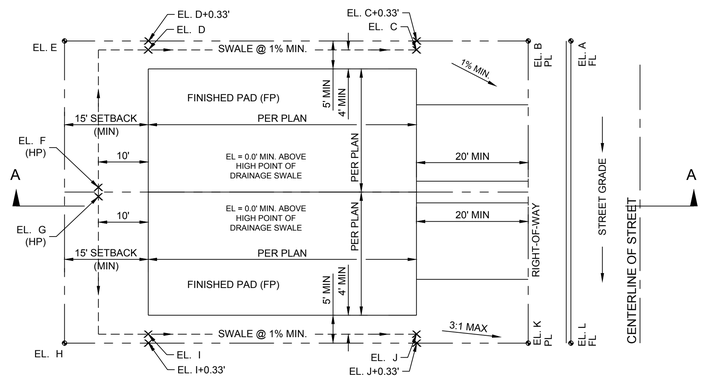


POINTS A, B, C, D, E, F, G, H, I, J, K, & L CORRESPOND TO ELEVATIONS DISPLAYED ON THE GRADING PLAN

A, L = FL C&G
B, K = PL/BACK OF SIDEWALK
C,D,F,G,J = FL SWALE
E,H = TOG @ PL

TYPICAL LOT GRADING - DRAIN TO FRONT
NOT TO SCALE

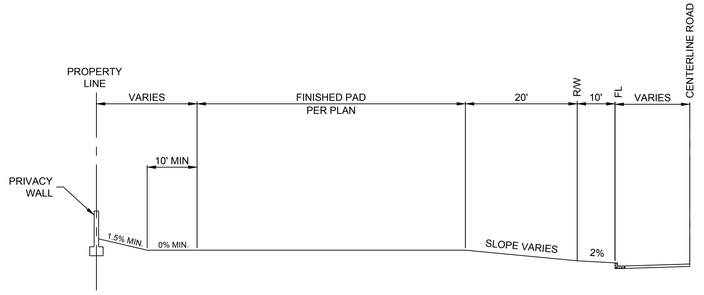


SECTION A-A
N.T.S.

DESIGNED SEG
DRAWN SEG
CHECKED JL
DATE 12.12.2024

REVISION

COMMUNITY DESIGN SOLUTIONS
9384 Valley View Drive NW, Suite 100
Albuquerque, NM 87144
505.366.4187

STAMP

SHELDON E. GREER
NEW MEXICO
17154
REGISTERED PROFESSIONAL ENGINEER
10/10/2024

THIS DRAWING IS INCOMPLETE AND NOT TO BE USED FOR CONSTRUCTION UNLESS IT IS STAMPED, SIGNED AND DATED

nm811 Know what's below. Call before you dig.

PROJ. #: 04197.006

PROJECT NAME: PULTE CAJA DEL ORO PHASE 2

SHEET TITLE: TYPICAL LOT GRADING

SUBMITTED FOR: CONSTRUCTION

SHEET NUMBER: C-110

NAME: P:\04197 Pulte\04197.006 Pulte Caja del Oro\3. DWG\Sheets\Phase II\C-111 Typical Alley and Lot Grading.dwg PLOT DATE: Dec 12, 2024 12:32pm

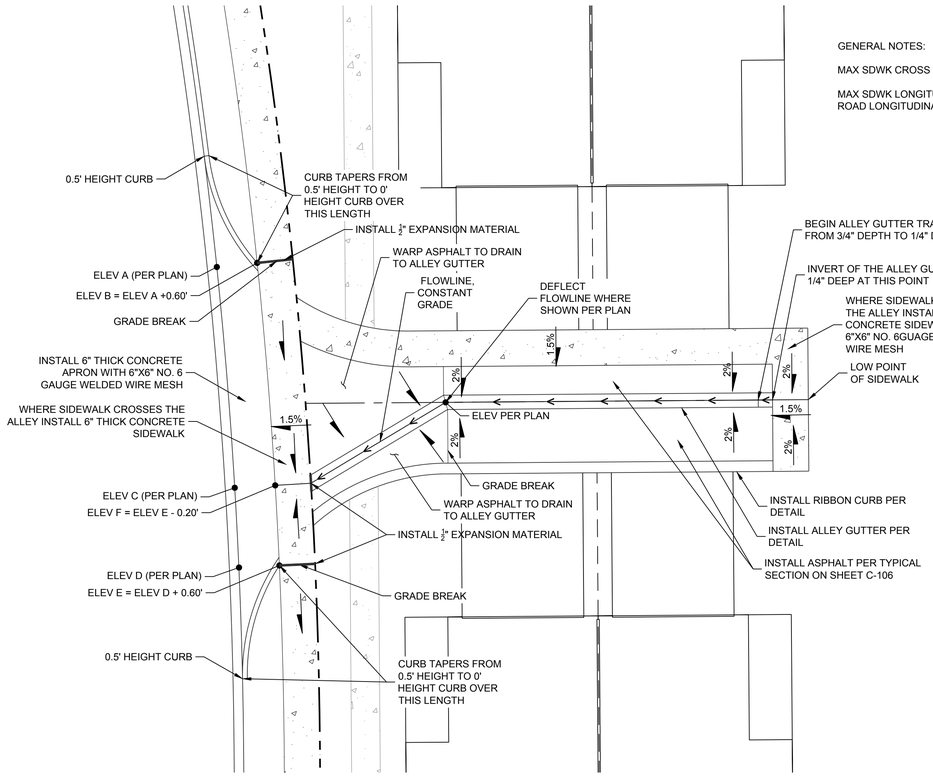


ALLEY CONNECTION DETAIL (USE WHERE SPECIFIED PER PLAN)

Scale: NTS

GENERAL NOTES:

MAX SDWK CROSS SLOPE 2% (1.5% PERFERRED)

MAX SDWK LONGITUDINAL SLOPE 5% UNLESS THE ROAD LONGITUDINAL SLOPE IS GREATER THAN 5%.


DESIGNED SEG
DRAWN SEG
CHECKED JL
DATE 12.12.2024

COMMUNITY DESIGN SOLUTIONS
9384 Valley View Drive NW, Suite 100
Albuquerque, NM 87144
505.366.4187


REVISION

STAMP

SHELDON E. GREER
NEW MEXICO
17154
REGISTERED PROFESSIONAL ENGINEER
10/10/2024

THIS DRAWING IS INCOMPLETE AND NOT TO BE USED FOR CONSTRUCTION UNLESS IT IS STAMPED, SIGNED AND DATED

nm811 Know what's below. Call before you dig.

PROJ. #: 04197.006

PROJECT NAME: PULTE CAJA DEL ORO PHASE 2

SHEET TITLE: TYPICAL ALLEY GRADING

SUBMITTED FOR: CONSTRUCTION

SHEET NUMBER: C-111

NAME: P:\04197 Pulte\04197.006 Pulte Caja del Oro\3. DWG\Sheets\Phase II\C-111 Typical Alley and Lot Grading.dwg PLOT DATE: Dec 12, 2024 12:32pm

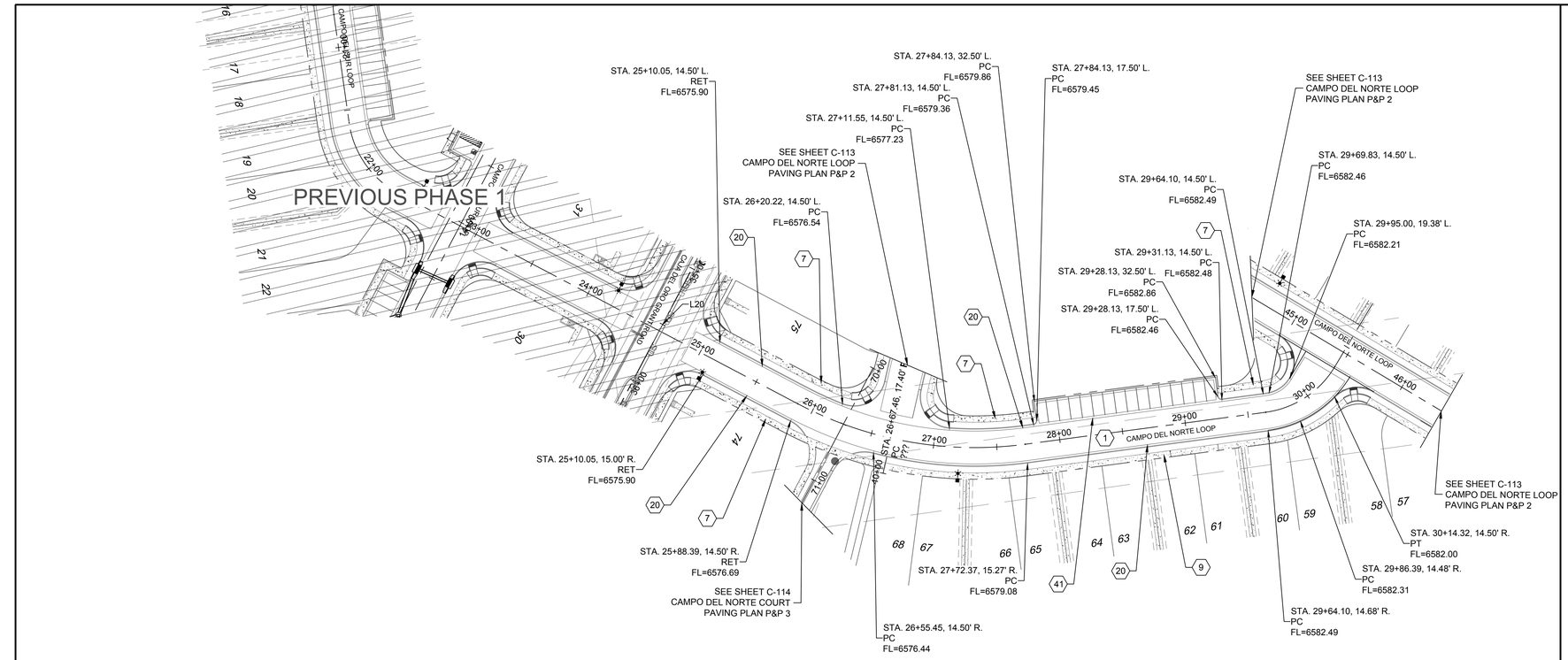


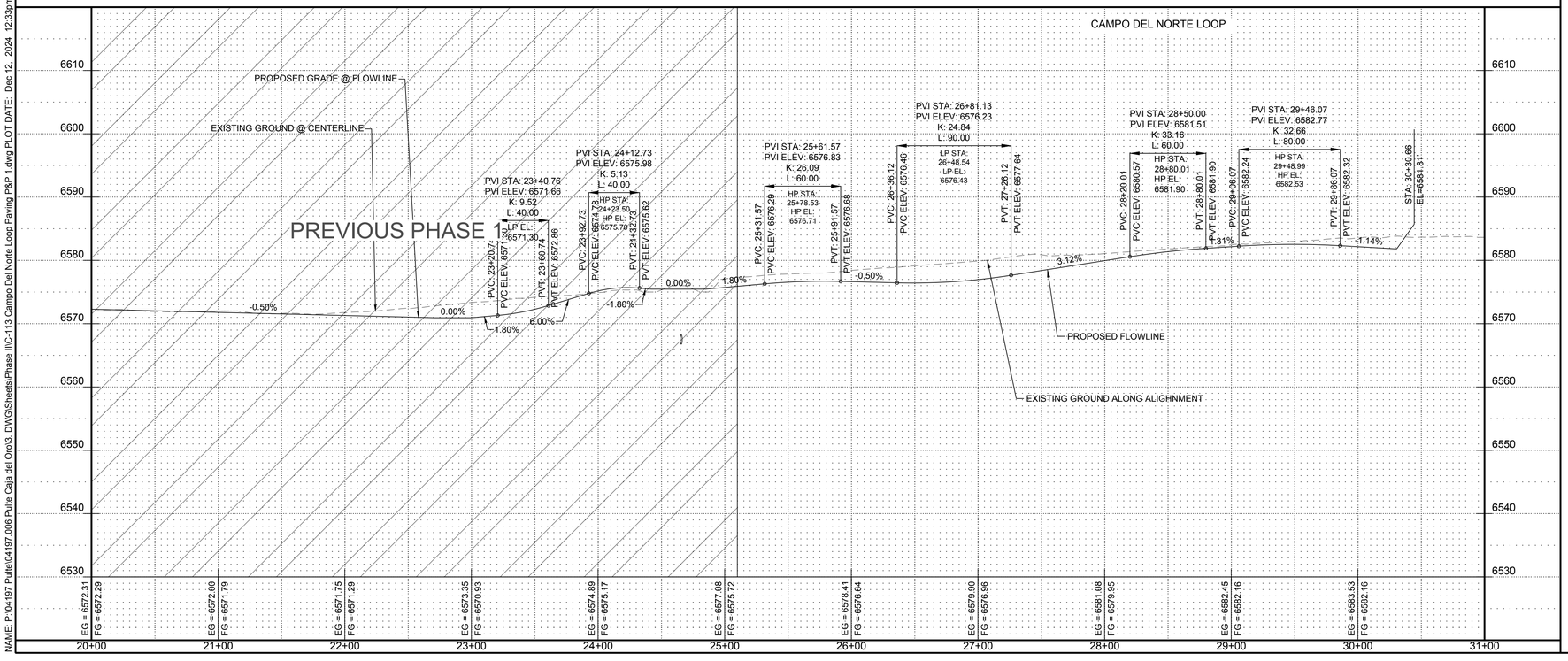


## PAVING CONSTRUCTION NOTES

| I.D.# | DESCRIPTION |
|---|---|
| 1 | BUILD RESIDENTIAL ASPHALT PAVING PER TYPICAL SECTION PER SHEET C-109 |
| 7 | BUILD 5' PCC SIDEWALK PER NM APWA STANDARD DETAIL 2430 |
| 9 | BUILD 5' PCC SIDEWALK PER NM APWA STANDARD DETAIL 2430 (DEFERRED) |
| 20 | BUILD CONCRETE BARRIER CURB AND GUTTER TYPE B PER NMDOT STD DWG 609-01-1/1 |
| 14 | BUILD PCC VALLEY GUTTER PER NM APWA STANDARD DETAIL 2420 |
| 41 | BUILD ALLEY GUTTER PER DETAIL ON SHEET C-109 |

## GENERAL NOTES

1. ALL CURB RETURNS HAVE 25' RADIUS AT THEORETICAL FACE OF CURB (FLOWLINE) PER NMDOT STD DWG 623-14, UNLESS OTHER-WISE INDICATED
2. ALL STATIONS AND OFFSETS ARE TO FACE OF CURB (FLOWLINE) PER DETAIL ON SHEET C-107, UNLESS OTHER-WISE INDICATED
3. INSTALL ALL PRIVATE DRIVEWAY APRONS PER MODIFIED NMDOT STD DWG 608-09, TYPE 2, SEE SHEET C-510. ALSO, REFERENCE TYPICAL ALLEY APRON DETAIL ON SHEET #####.
4. SIDEWALKS INSTALLED IN THE ALLEYS SHALL BE 6" THICK WITH 6"X6" 6 GAUGE WELDED WIRE MESH.
5. FLOWLINE LABELS AT INLETS AND PROFILE ELEVATIONS AT INLETS REPRESENT NORMAL FLOWLINE GRADES, SEE THE APPROPRIATE INLET STANDARD DRAWING FOR THE FLOWLINE WRAP DOWN TO THE GRATE ELEVATION

SCALE:
HORIZONTAL: 1" = 50'
VERTICAL: 1" = 5'
0 50 100
5 4 3 2 1

DESIGNED SEG
DRAWN SEG
CHECKED JL
DATE 12.12.2024

REVISION

COMMUNITY DESIGN SOLUTIONS
9384 Valley View Drive NW, Suite 100
Albuquerque, NM 87144
505.366.4187

STAMP

SHELDON E. GREER
NEW MEXICO
17154
PROFESSIONAL ENGINEER
10/10/2024

THIS DRAWING IS INCOMPLETE AND NOT TO BE USED FOR CONSTRUCTION UNLESS IT IS STAMPED, SIGNED AND DATED

nm811 Know what's below. Call before you dig.

PROJ. #: 04197.006

PROJECT NAME: PULTE CAJA DEL ORO PHASE 2

SHEET TITLE: CAMPO DEL NORTE LOOP PAVING P&P 1

SUBMITTED FOR: CONSTRUCTION

SHEET NUMBER: C-112

NAME: P:\04197 Pulte\04197.006 Pulte Caja del Oro\3. DWG\Sheets\Phase II\C-113 Campo Del Norte Loop Paving P&P 1.dwg PLOT DATE: Dec 12, 2024 12:33pm

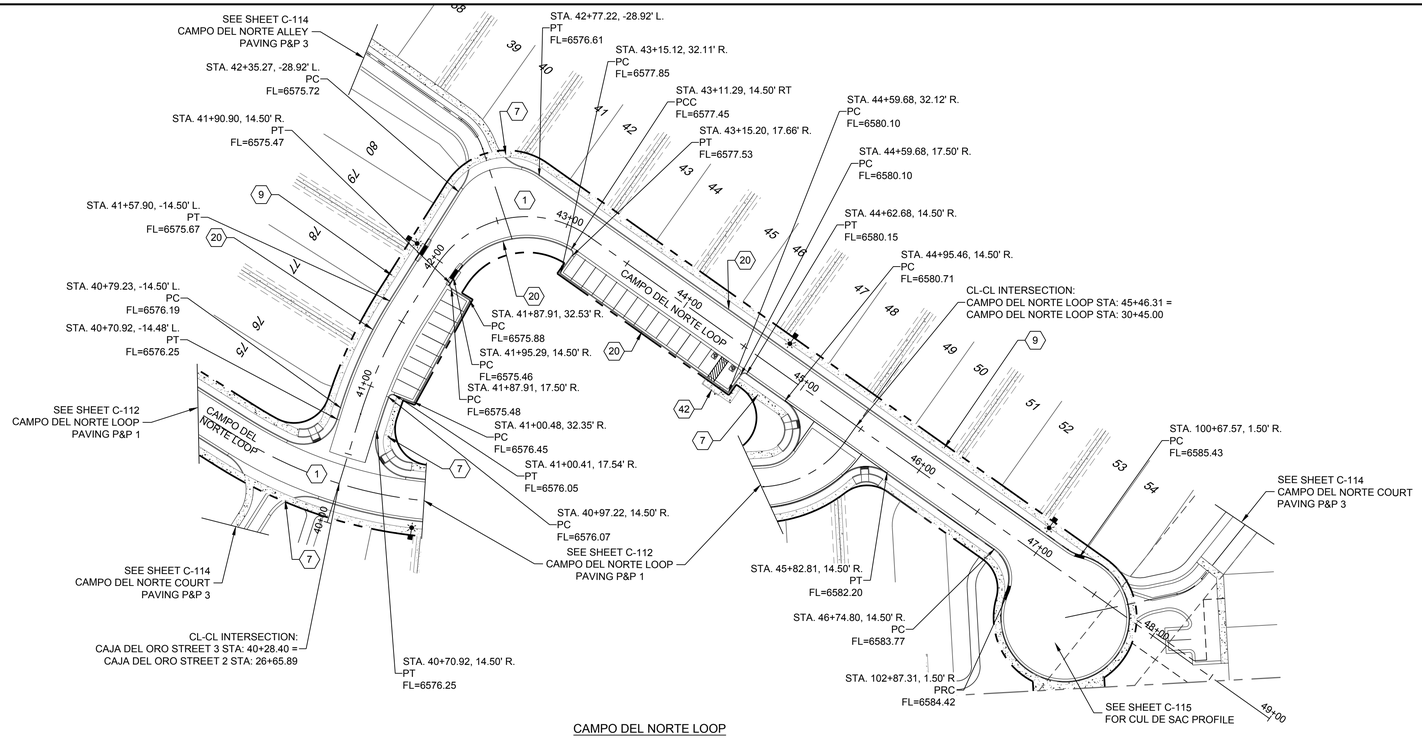


## PAVING CONSTRUCTION NOTES

| I.D.# | DESCRIPTION |
|---|---|
| 1 | BUILD RESIDENTIAL ASPHALT PAVING PER TYPICAL SECTION |
| 7 | BUILD 5' PCC SIDEWALK PER NM APWA STANDARD DETAIL 2430 |
| 9 | BUILD 5' PCC SIDEWALK PER NM APWA STANDARD DETAIL 2430 (DEFERRED) |
| 20 | BUILD CONCRETE BARRIER CURB AND GUTTER TYPE B PER NMDOT STD DWG 609-01-1/1 |
| 41 | BUILD ALLEY GUTTER PER DETAIL ON SHEET C-109 |
| 42 | BUILD PARALLEL CURB RAMP PER NMDOT STD DWG 608-001-3 |

## GENERAL NOTES

1. ALL CURB RETURNS HAVE 25' RADIUS AT THEORETICAL FACE OF CURB (FLOWLINE) PER NMDOT STD DWG 623-14, UNLESS OTHER-WISE INDICATED
2. ALL STATIONS AND OFFSETS ARE TO FACE OF CURB (FLOWLINE) PER DETAIL ON SHEET C-107, UNLESS OTHER-WISE INDICATED
3. INSTALL ALL PRIVATE DRIVEWAY APRONS PER MODIFIED NMDOT STD DWG 608-09, TYPE 2, SEE SHEET C-510. ALSO, REFERENCE TYPICAL ALLEY APRON DETAIL ON SHEET #####.
4. SIDEWALKS INSTALLED IN THE ALLEYS SHALL BE 6" THICK WITH 6"X6" 6 GAUGE WELDED WIRE MESH.
5. FLOWLINE LABELS AT INLETS AND PROFILE ELEVATIONS AT INLETS REPRESENT NORMAL FLOWLINE GRADES. SEE THE APPROPRIATE INLET STANDARD DRAWING FOR THE FLOWLINE WRAP DOWN TO THE GRATE ELEVATION

SCALE:
HORIZONTAL: 1" = 50'
VERTICAL: 1" = 10'


DESIGNED SEG
DRAWN SEG
CHECKED JL
DATE 12.12.2024

COMMUNITY DESIGN SOLUTIONS
9384 Valley View Drive NW, Suite 100
Albuquerque, NM 87144
505.366.4187


REVISION

STAMP

SHELDON E. GREER
NEW MEXICO
17154
REGISTERED PROFESSIONAL ENGINEER
10/10/2024

THIS DRAWING IS INCOMPLETE AND NOT TO BE USED FOR CONSTRUCTION UNLESS IT IS STAMPED, SIGNED AND DATED

nm811 Know what's below. Call before you dig.

PROJ. #: 04197.006

PROJECT NAME: PULTE CAJA DEL ORO PHASE 2

SHEET TITLE: CAMPO DEL NORTE LOOP PAVING P&P 2

SUBMITTED FOR: CONSTRUCTION

SHEET NUMBER: C-113

NAME: P:\04197 Pulte\04197.006 Pulte Caja del Oro\3. DWG\Sheets\Phase II\C-114 Campo del Norte Loop Paving P&P 2.dwg PLOT DATE: Dec 12, 2024 12:33pm

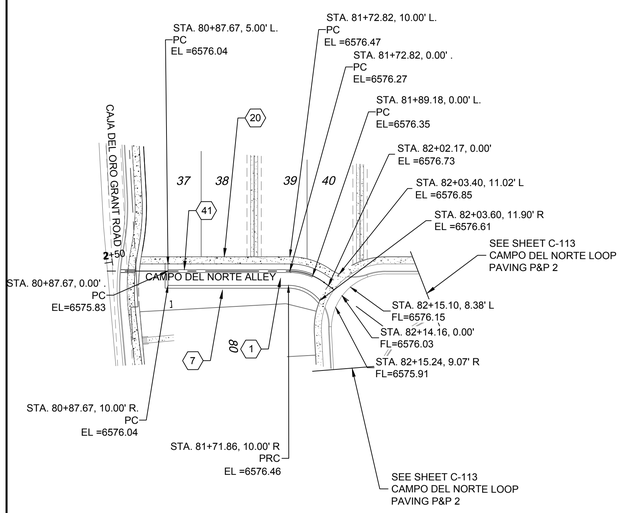


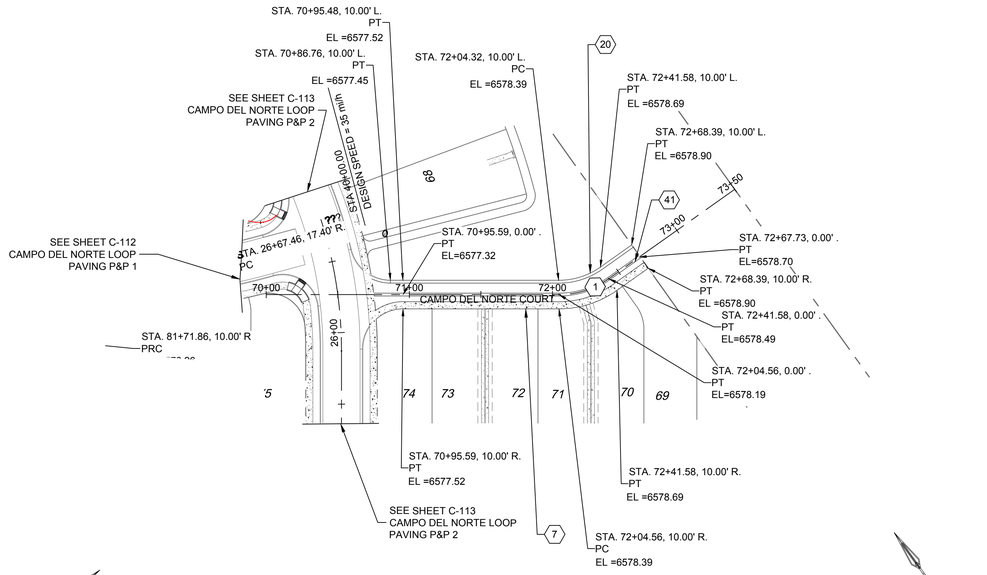


## PAVING CONSTRUCTION NOTES

| I.D.# | DESCRIPTION |
|---|---|
| 1 | BUILD RESIDENTIAL ASPHALT PAVING PER TYPICAL SECTION |
| 7 | BUILD 6' PCC SIDEWALK PER NM APWA STANDARD DETAIL 2430 |
| 9 | BUILD 5' PCC SIDEWALK PER NM APWA STANDARD DETAIL 2430 (DEFERRED) |
| 20 | BUILD CONCRETE BARRIER CURB AND GUTTER TYPE B PER NMDOT STD DWG 609-01-1/1 |
| 41 | BUILD ALLEY GUTTER PER DETAIL ON SHEET C-109 |

## GENERAL NOTES

1. ALL CURB RETURNS HAVE 25' RADIUS AT THEORETICAL FACE OF CURB (FLOWLINE) PER NMDOT STD DWG 623-14, UNLESS OTHER-WISE INDICATED
2. ALL STATIONS AND OFFSETS ARE TO FACE OF CURB (FLOWLINE) PER DETAIL ON SHEET C-107, UNLESS OTHER-WISE INDICATED
3. INSTALL ALL PRIVATE DRIVEWAY APRONS PER MODIFIED NMDOT STD DWG 608-09, TYPE 2, SEE SHEET C-510. ALSO, REFERENCE TYPICAL ALLEY APRON DETAIL ON SHEET #####.
4. SIDEWALKS INSTALLED IN THE ALLEYS SHALL BE 6" THICK WITH 6"X6" 6 GAUGE WELDED WIRE MESH.
5. FLOWLINE LABELS AT INLETS AND PROFILE ELEVATIONS AT INLETS REPRESENT NORMAL FLOWLINE GRADES, SEE THE APPROPRIATE INLET STANDARD DRAWING FOR THE FLOWLINE WRAP DOWN TO THE GRATE ELEVATION

CAMPO DEL NORTE ALLEY




CAMPO DEL NORTE COURT




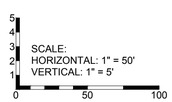


REVISION

DESIGNED SEG
DRAWN SEG
CHECKED JL
DATE 12.12.2024

COMMUNITY DESIGN SOLUTIONS
9384 Valley View Drive NW, Suite 100
Albuquerque, NM 87144
505.366.4187

STAMP

SHELDON E. GREER
NEW MEXICO
17154
REGISTERED PROFESSIONAL ENGINEER
10/10/2024

THIS DRAWING IS INCOMPLETE AND NOT TO BE USED FOR CONSTRUCTION UNLESS IT IS STAMPED, SIGNED AND DATED

nm811 Know what's below. Call before you dig.

PROJ. #: 04197.006

PROJECT NAME: PULTE CAJA DEL ORO PHASE 2

SHEET TITLE: CAMPO DEL NORTE ALLEY & COURT PAVING P&P 3

SUBMITTED FOR: CONSTRUCTION

SHEET NUMBER: C-114

NAME: P:\04197 Pulte\04197.006 Pulte Caja del Oro\3. DWG\Sheets\Phase II\C-115 Campo del Norte Alley & Court Paving P&P 3.dwg PLOT DATE: Dec 12, 2024 12:34pm

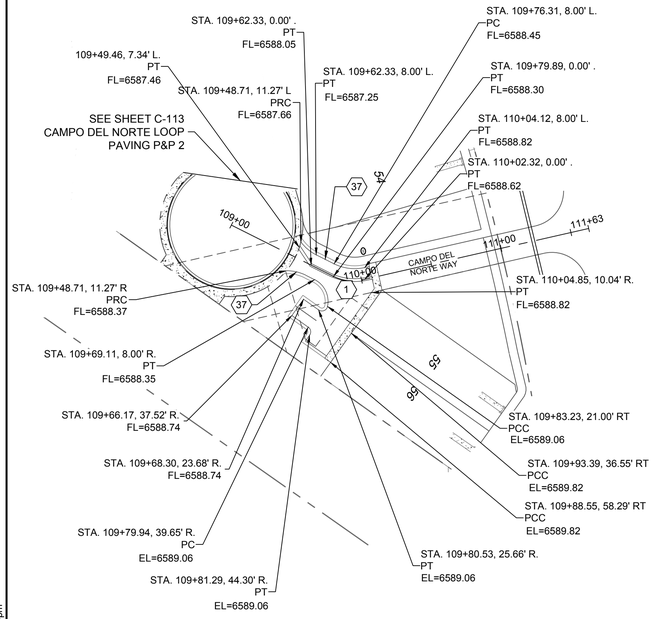


CAMPO DEL NORTE WAY

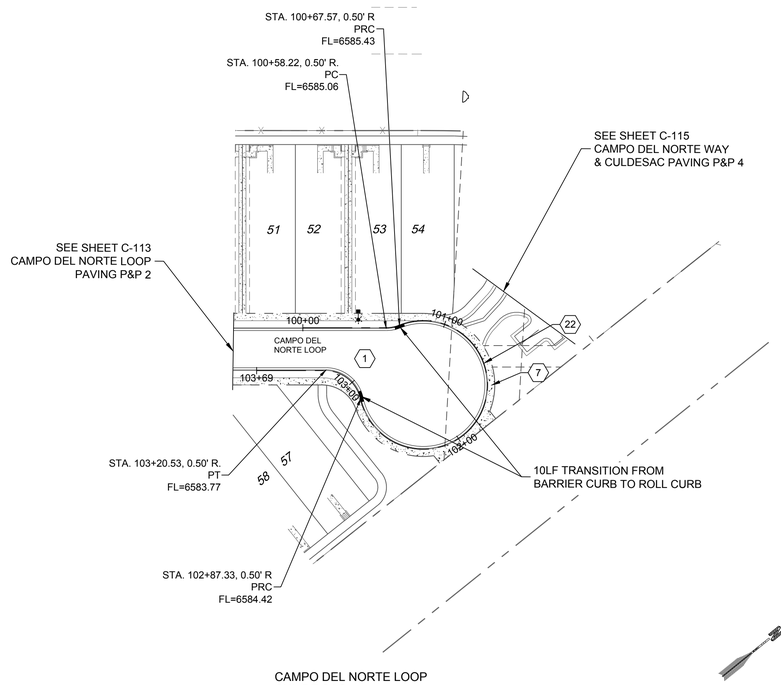


CAMPO DEL NORTE LOOP
CUL DE SAC

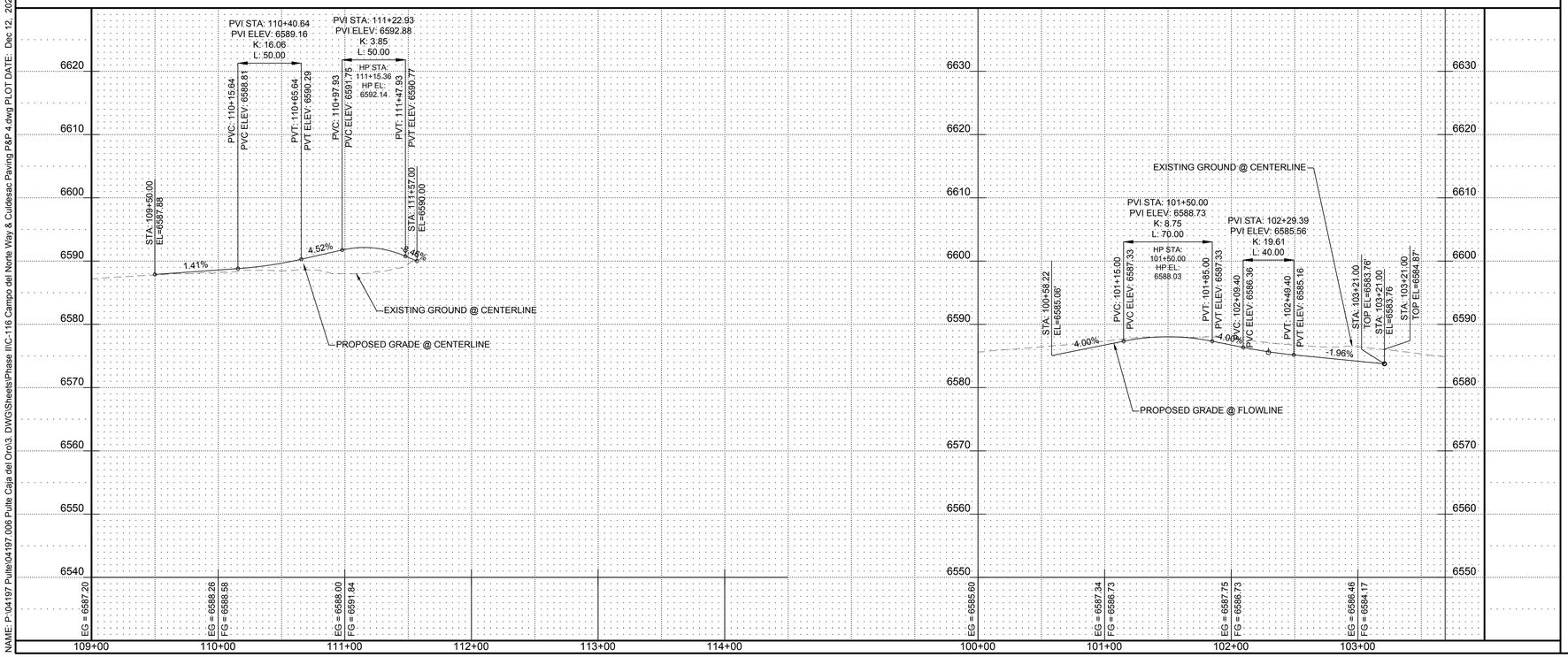





## PAVING CONSTRUCTION NOTES

| I.D.# | DESCRIPTION |
|---|---|
| 1 | BUILD RESIDENTIAL ASPHALT PAVING PER TYPICAL SECTION |
| 9 | BUILD 5' PCC SIDEWALK PER NM APWA STANDARD DETAIL 2430 (DEFERRED) |
| 22 | BUILD PCC ROLL TYPE CURB & GUTTER PER NM APWA STANDARD DETAIL 2415 |
| 37 | BUILD RIBBON CURB PER DETAIL ON SHEET C-109 |

## GENERAL NOTES

1. ALL CURB RETURNS HAVE 25' RADIUS AT THEORETICAL FACE OF CURB (FLOWLINE) PER NMDOT STD DWG 623-14, UNLESS OTHER-WISE INDICATED
2. ALL STATIONS AND OFFSETS ARE TO FACE OF CURB (FLOWLINE) PER DETAIL ON SHEET C-107, UNLESS OTHER-WISE INDICATED
3. INSTALL ALL PRIVATE DRIVEWAY APRONS PER MODIFIED NMDOT STD DWG 608-09, TYPE 2, SEE SHEET C-510. ALSO, REFERENCE TYPICAL ALLEY APRON DETAIL ON SHEET #####.
4. SIDEWALKS INSTALLED IN THE ALLEYS SHALL BE 6" THICK WITH 6"X6" 6 GAUGE WELDED WIRE MESH.
5. FLOWLINE LABELS AT INLETS AND PROFILE ELEVATIONS AT INLETS REPRESENT NORMAL FLOWLINE GRADES, SEE THE APPROPRIATE INLET STANDARD DRAWING FOR THE FLOWLINE WRAP DOWN TO THE GRATE ELEVATION

SCALE:
HORIZONTAL: 1" = 50'
VERTICAL: 1" = 5'

| | |
|---|---|
| DESIGNED | SEG |
| DRAWN | SEG |
| CHECKED | JL |
| DATE | 12.12.2024 |

REVISION

COMMUNITY DESIGN SOLUTIONS
9384 Valley View Drive NW, Suite 100
Albuquerque, NM 87144
505.366.4187

STAMP

SHELDON E. GREER NEW MEXICO 17154 PROFESSIONAL ENGINEER 10/10/2024

THIS DRAWING IS INCOMPLETE AND NOT TO BE USED FOR CONSTRUCTION UNLESS IT IS STAMPED, SIGNED AND DATED

nm811 Know what's below. Call before you dig.

PROJ. #: 04197.006

PROJECT NAME: PULTE CAJA DEL ORO PHASE 2

SHEET TITLE: CAMPO DEL NORTE WAY & CULDESAC PAVING P&P 4

SUBMITTED FOR: CONSTRUCTION

SHEET NUMBER: C-115

NAME: P:\04197 Pulte\04197.006 Pulte Caja del Oro\3. DWG\Sheets\Phase II\C-116 Campo del Norte Way & Culdesac Paving P&P 4.dwg PLOT DATE: Dec 12, 2024 12:34pm

ALL CURB RAMPS ON THIS SHEET SHALL BE INSTALLED PER NMDOT STD DWG 608-05 COMBINATION CURB RAMP (A).

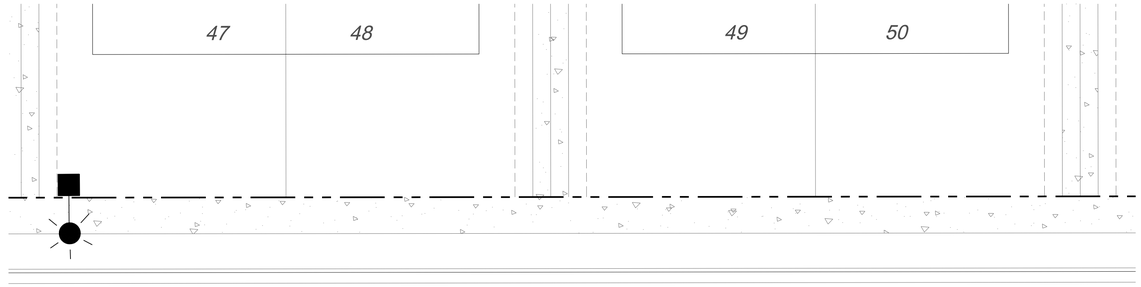


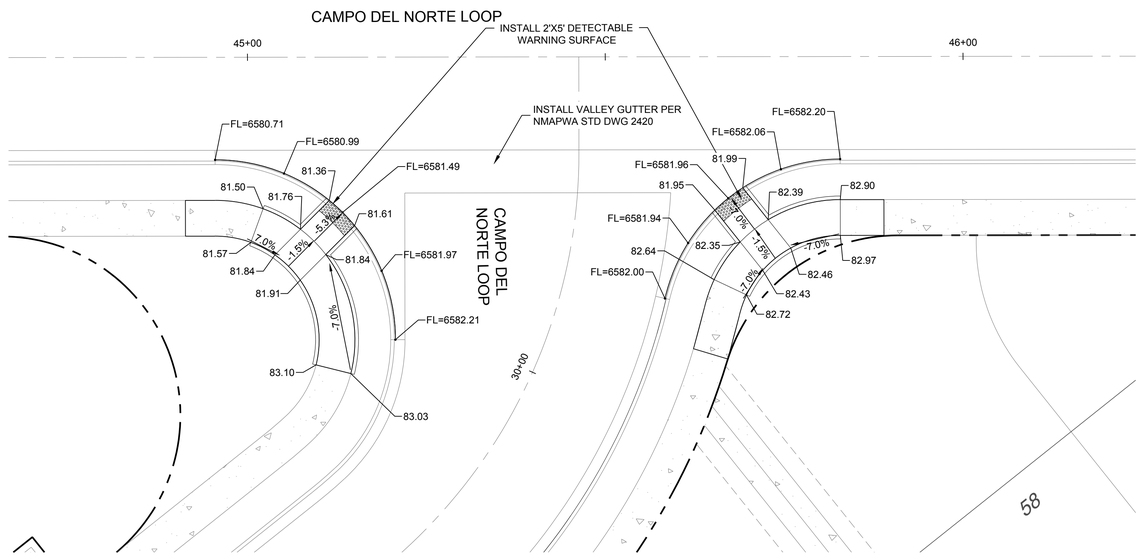




0 10 20
SCALE: 1" = 10'

DESIGNED SEG
DRAWN SEG
CHECKED JL
DATE 12.12.2024

REVISION

COMMUNITY DESIGN SOLUTIONS
9384 Valley View Drive NW, Suite 100
Albuquerque, NM 87144
505.366.4187

STAMP

SHELDON E. GREER
NEW MEXICO
17154
PROFESSIONAL ENGINEER

THIS DRAWING IS INCOMPLETE AND NOT TO BE USED FOR CONSTRUCTION UNLESS IT IS STAMPED, SIGNED AND DATED

nm811 Know what's below. Call before you dig.

PROJ. #: 04197.006

PROJECT NAME: PULTE CAJA DEL ORO PHASE 2

SHEET TITLE: CAMPO DEL NORTE LOOP INTERSECTION DETAIL 1

SUBMITTED FOR: CONSTRUCTION

SHEET NUMBER: C-116

NAME: P:\04197 Pulte\04197.006 Pulte Caja del Oro\3. DWG\Sheets\Phase II\C-117 Campo Del Norte Loop Intersection Detail 1.dwg PLOT DATE: Dec 12, 2024 12:35pm

ALL CURB RAMPS ON THIS SHEET SHALL BE INSTALLED PER NMDOT STD DWG 608-05 COMBINATION CURB RAMP (A).

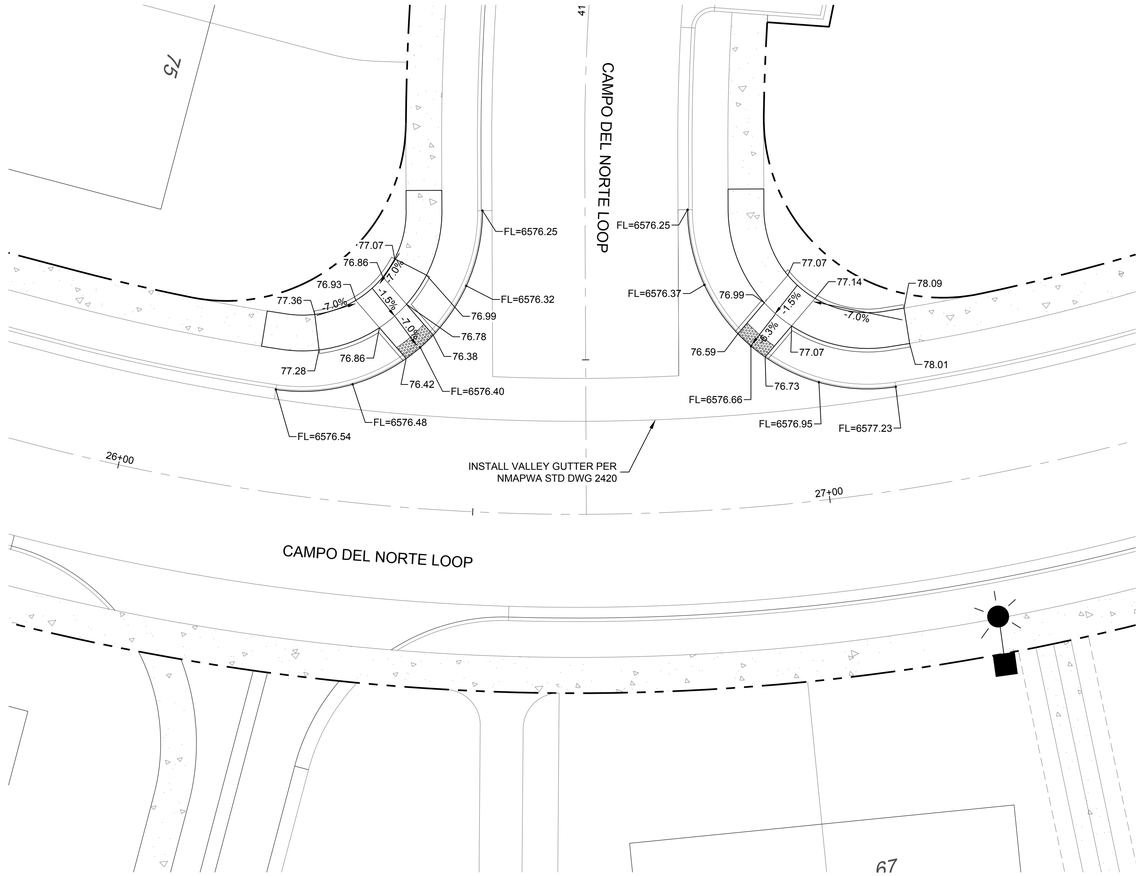


0 10 20
SCALE: 1" = 10'

NAME: P:\04197 Pulte\04197.006 Pulte Caja del Oro\3. DWG\Sheets\Phase II\C-118 Campo Del Norte Loop Intersection Detail 2.dwg PLOT DATE: Dec 12, 2024 12:35pm

| | |
|---|---|
| DESIGNED | SEG |
| DRAWN | SEG |
| CHECKED | JL |
| DATE | 12.12.2024 |

REVISION


COMMUNITY DESIGN SOLUTIONS
9384 Valley View Drive NW, Suite 100
Albuquerque, NM 87144
505.366.4187


STAMP

SHELDON E. GREER
NEW MEXICO
17154
PROFESSIONAL ENGINEER

THIS DRAWING IS INCOMPLETE AND NOT TO BE USED FOR CONSTRUCTION UNLESS IT IS STAMPED, SIGNED AND DATED

nm811 Know what's below. Call before you dig.

PROJ. #: 04197.006

PROJECT NAME: PULTE CAJA DEL ORO PHASE 2

SHEET TITLE: CAMPO DEL NORTE LOOP INTERSECTION DETAIL 2

SUBMITTED FOR: CONSTRUCTION

SHEET NUMBER: C-117

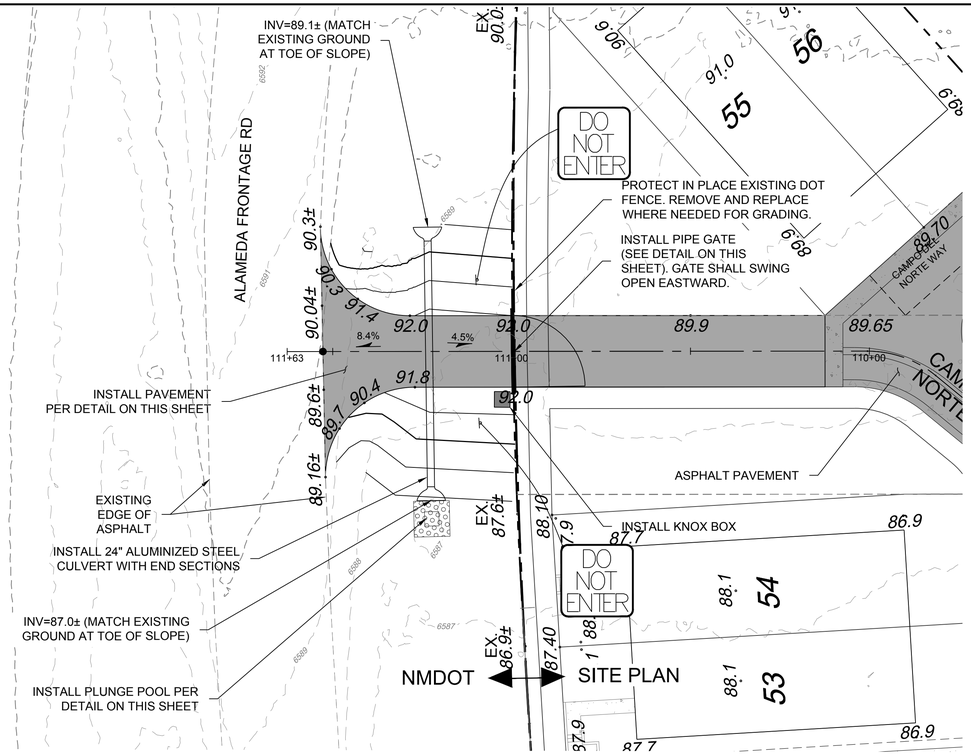


NORTH EMERGENCY EXIT PLAN VIEW




LEGEND

ASPHALT PAVEMENT

CONCRETE

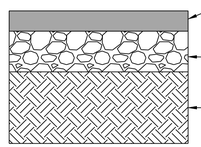


PAVEMENT SECTION

NTS

NOTE:
EMERGENCY ACCESS SURFACE CAN BEAR A 75,000 LB FIRE APPARATUS.

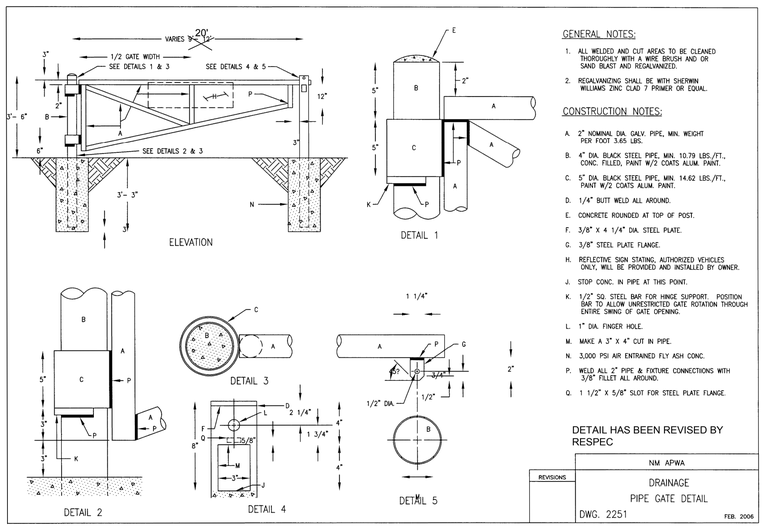


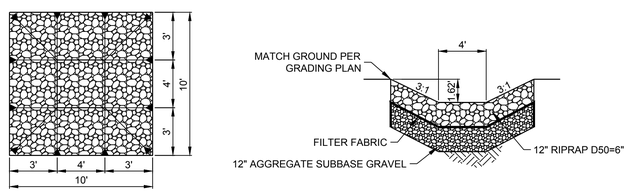


RIPRAP PLUNGE POOL DETAIL

Scale: NTS

| | |
|---|---|
| DESIGNED | SEG |
| DRAWN | SEG |
| CHECKED | JL |
| DATE | 12.12.2024 |

REVISION


COMMUNITY DESIGN SOLUTIONS
9384 Valley View Drive NW, Suite 100
Albuquerque, NM 87144
505.366.4187


STAMP

SHELDON E. GREER NEW MEXICO 17154 REGISTERED PROFESSIONAL ENGINEER 06/06/2025

THIS DRAWING IS INCOMPLETE AND NOT TO BE USED FOR CONSTRUCTION UNLESS IT IS STAMPED, SIGNED AND DATED

nm811 Know what's below. Call before you dig.

PROJ. #: 04197.006

PROJECT NAME: PULTE CAJA DEL ORO PHASE 2

SHEET TITLE: NMDOT Emergency Exit

SUBMITTED FOR: CONSTRUCTION

SHEET NUMBER: C-118

NAME: P:\04197 Pulte\04197.006 Pulte Caja del Oro\3. DWG\Sheets\Phase II\C-119 NMDOT Emergency Exit.dwg PLOT DATE: Dec 12, 2024 12:35pm

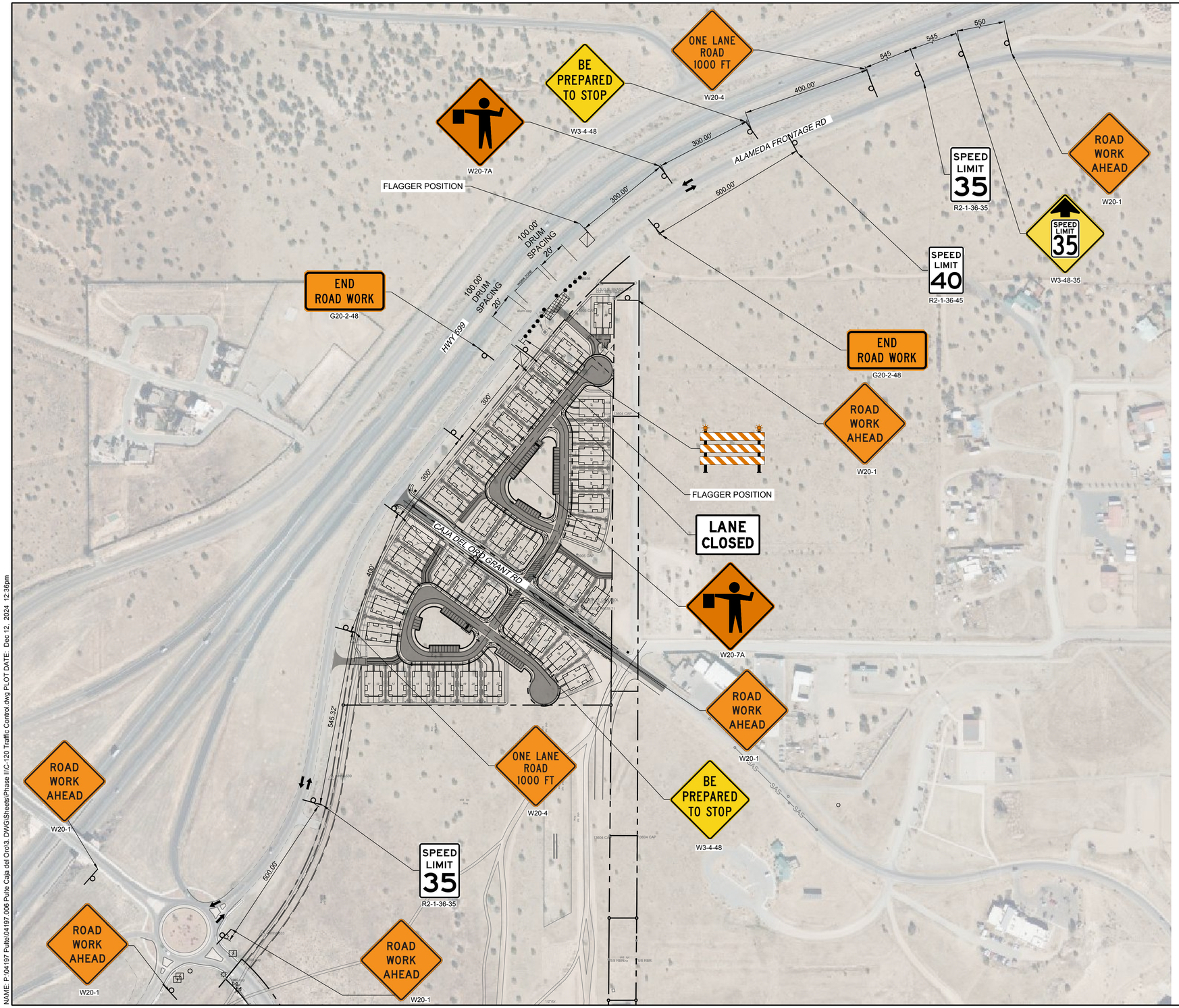


NAME: P:\04197 Pulte\04197.006 Pulte Caja del Oro\3. DWG\Sheets\Phase II\C-120 Traffic Control.dwg PLOT DATE: Dec 12, 2024 12:36pm

GENERAL NOTES:

1. CONTRACTOR WILL OBTAIN A TEMPORARY TRAFFIC CONTROL PERMIT FROM THE NMDOT DISTRICT 5, PRIOR TO CONSTRUCTION.
2. FORWARD ALL SIGN SUBMITTALS TO NMDOT DISTRICT 5 FOR APPROVAL PRIOR TO SIGN FABRICATION.
3. BOTH TEMPORARY AND PERMANENT SIGNS WILL BE PLACED AT A MINIMUM 3' OFFSET FROM TRAVEL LANES.
4. SIGN SPACING AND CHANNELIZATION DEVICES, FOR VERTICAL AND HORIZONTAL CURVES, SIDE ROADS, AND DRIVEWAYS WILL BE MAINTAINED IN THE FIELD.
5. ALL ADVANCED WARNING SIGNS SHOULD BE DOUBLE INDICATED WHEN FEASIBLE.
6. VMS BOARD SHALL BE SET 48 HOURS IN ADVANCED FOR PUBLIC AWARENESS.
7. ALL PERMANENT SIGNS WILL BE INSTALLED PER NMDOT STD DWG 701-02-1/3 THRU 701-02-2/3.
8. FORWARD ALL SIGN SUBMITTALS TO NMDOT DISTRICT 5 FOR APPROVAL PRIOR TO SIGN FABRICATION.
9. BOTH TEMPORARY AND PERMANENT SIGNS WILL BE PLACED AT A MINIMUM 3' OFFSET FROM TRAVEL LANES.
10. ALL PERMANENT STRIPPING WILL BE THERMO-PLASTIC.

LEGEND

| | |
|---|---|
| CONSTRUCTION ZONE | |
| TTC DEVICE - TYPE III BARRICADE | |
| TTC - PANEL SIGN | |
| TTC DEVICE - DRUM | |
| TRAFFIC FLOW ARROW | |

DESIGNED SEG
DRAWN SEG
CHECKED JL
DATE 12.12.2024

REVISION

COMMUNITY DESIGN SOLUTIONS
9384 Valley View Drive NW, Suite 100
Albuquerque, NM 87144
505.366.4187

STAMP

SHELDON E. GREER
NEW MEXICO
17154
REGISTERED PROFESSIONAL ENGINEER
12/12/2024

THIS DRAWING IS INCOMPLETE AND NOT TO BE USED FOR CONSTRUCTION UNLESS IT IS STAMPED, SIGNED AND DATED

nm811 Know what's below. Call before you dig.

PROJ. #: 04197.006

PROJECT NAME: PULTE CAJA DEL ORO PHASE 2

SHEET TITLE: Traffic Control

SUBMITTED FOR: CONSTRUCTION

SHEET NUMBER: C-119

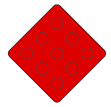

OM4-1
R/R/R
18"x18"




R1-1-36
W/R
36"x36"




B/W
X"xX"




D3-1
GR/W




D3-1
GR/W




D3-1
GR/W




D3-1
GR/W




D3-1
GR/W




D3-1
GR/W

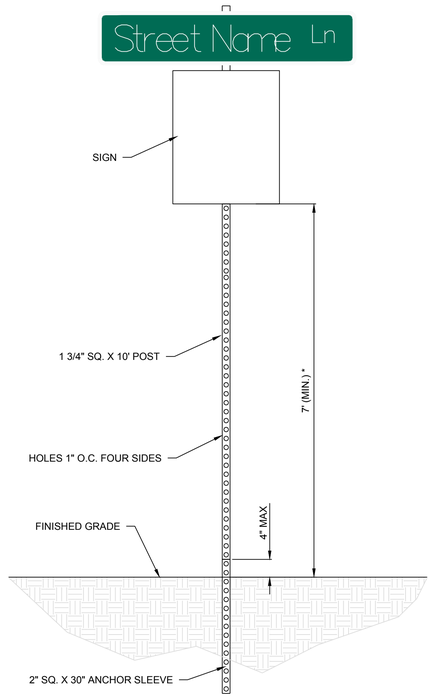


* SEE MUTCD FOR MINIMUM MOUNTING HEIGHT FOR EACH SIGN TYPE IN RURAL AREAS

SIGN POST DETAIL

SIGN LEGEND



W6-2-36 — MUTCD SIGN CODE
B/Y — SIGN COLOR
36"x36" — SIGN DIMENSION

SIGN ABBREVIATIONS

B - BLACK

BL - BLUE

BR - BROWN

FO - FLUORESCENT ORANGE

FY - FLUORESCENT YELLOW

FYG - FLUORESCENT YELLOW GREEN

G - GREEN

O - ORANGE

R - RED

S - SILVER

W - WHITE

Y - YELLOW

GENERAL SIGN NOTES

1. ALL STREET NAME SIGNS WILL BE PER MUTCD.

REVISION

DESIGNED SEG
DRAWN SEG
CHECKED JL
DATE 12.12.2024

COMMUNITY DESIGN SOLUTIONS
9384 Valley View Drive NW, Suite 100
Albuquerque, NM 87144
505.366.4187

STAMP




THIS DRAWING IS INCOMPLETE AND NOT TO BE USED FOR CONSTRUCTION UNLESS IT IS STAMPED, SIGNED AND DATED




PROJ. #: 04197.006

PROJECT NAME: PULTE CAJA DEL ORO PHASE 2

SHEET TITLE: SIGN, SIGN FACE, AND STRIPING DETAILS

SUBMITTED FOR: CONSTRUCTION

SHEET NUMBER: C-120

NAME: P:\04197 Pulte\04197.006 Pulte Caja del Oro\3. DWG\Sheets\Phase II\C-121 Sign, Sign Face, and Striping Details.dwg PLOT DATE: Dec 12, 2024 12:36pm

STRIPING KEYED NOTES:

- A — 4" SOLID WHITE HOT THERMOPLASTIC PAVEMENT STRIPE
- B — 12" SOLID WHITE HOT THERMOPLASTIC PAVEMENT STRIPE
- C — INSTALL SIGN PER DETAIL SHEET C-120
- D — STOP SIGN R1-1-36
- E — NOT IN USE
- F — NOT IN USE
- G — NOT IN USE
- H — WARNING SIGN OM4-1
- J — DO NOT ENTER SIGN

SIGNING LEGEND:

N / X — INSTALL NEW PERMANENT SIGN

LEGEND

SIGN

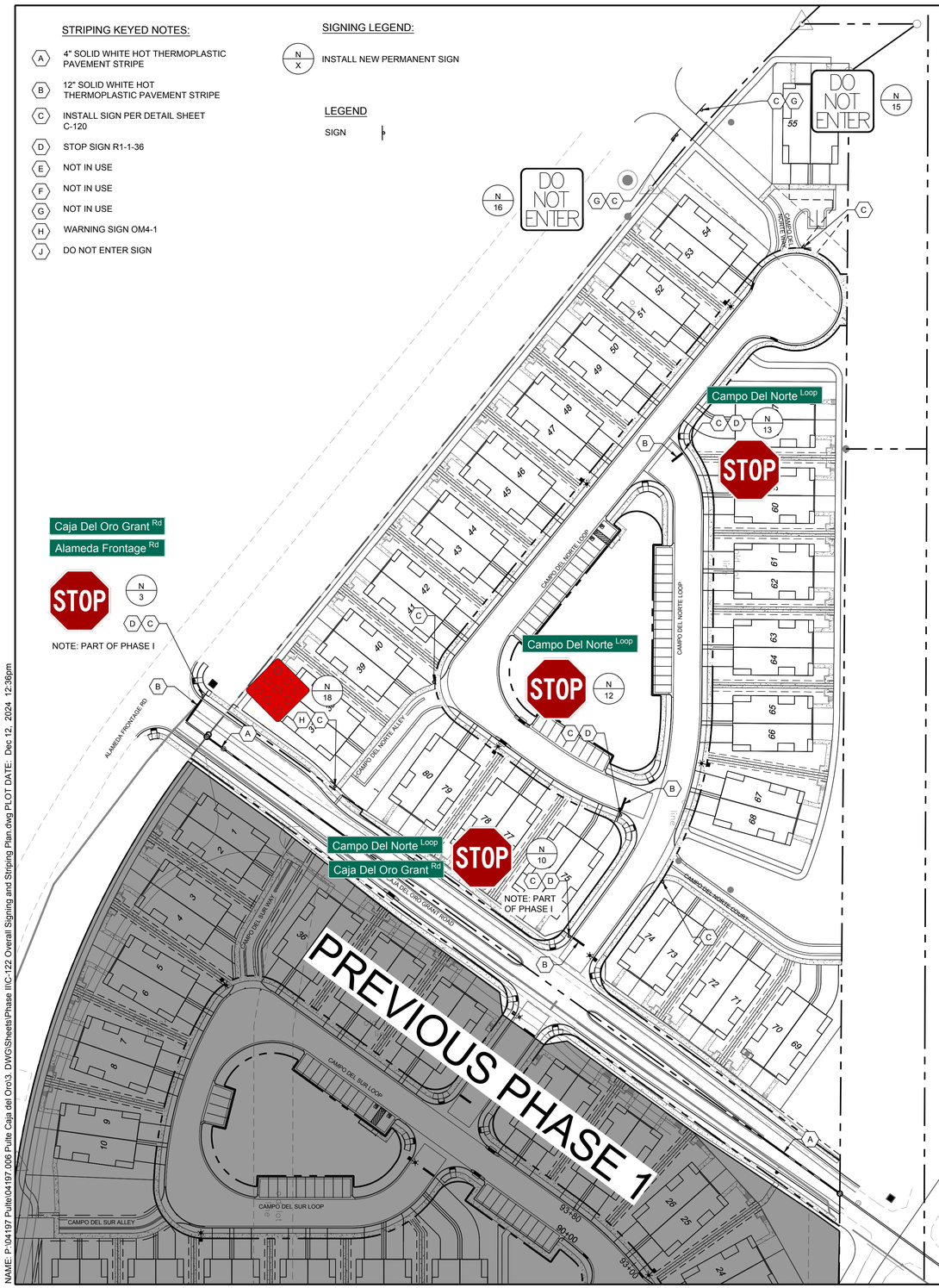


SIGNS

| SIGN | SIGN DESIGNATION | SIZE | HEIGHT | LOCATION | COLOR |
|---|---|---|---|---|---|
| Caja Del Oro Grant Rd / Alameda Frontage Rd / STOP | D3-1<br>D3-1<br>R1-1 | 30 X 30 | 7' MIN | N 3 | GR/W<br>GR/W<br>R/W |
| Campo Del Norte Loop / Caja Del Oro Grant Rd / STOP | D3-1<br>D3-1<br>R1-1 | 30 X 30 | 7' MIN | N 10 | GR/W<br>GR/W<br>R/W |
| NOT IN USE | | | | | |
| Campo Del Norte Loop / STOP | D3-1<br>R1-1 | 30 X 30 | 7' MIN | N 12 | GR/W<br>R/W |
| Campo Del Norte Loop / STOP | D3-1<br>R1-1 | 30 X 30 | 7' MIN | N 13 | GR/W<br>R/W |
| Campo Del Norte Way / NO PARKING ANY TIME | R7-1 | 24 X 30 | 7' MIN | N 14 | R/W |
| DO NOT ENTER | | | 7' MIN | N 15 | B/W |
| DO NOT ENTER | | | 7' MIN | N 16 | B/W |
| NOT IN USE | | | | | |
| | OM4-1 | 18 X 18 | 7' MIN | N 18 | R/R/R |

CITY OF SANTA FE SIGNING AND STRIPING NOTES:

SIGN AND POST REQUIREMENTS:

1. ALL ALUMINUM PANEL SIGNING AND STEEL POSTS SHALL COMPLY WITH THE NEW MEXICO DEPARTMENT OF TRANSPORTATION (NMDOT); CURRENT EDITION OF THE STANDARD SPECIFICATIONS FOR HIGHWAY AND BRIDGE CONSTRUCTION (SSHBC).
2. ALL SIGNING SHALL COMPLY WITH THE MANUAL ON UNIFORM TRAFFIC CONTROL DEVICES (MUTCD) - CURRENT EDITION.
3. SIGNPOSTS WITH APPROVED BREAKAWAY DEVICE SHALL BE "MARION" BRAND 4LB. / FT. U CHANNEL - BLACK; NO SUBSTITUTES ALLOWED.
4. SIGN SHEETING SHALL BE "3M" BRAND HIGH INTENSITY; NO SUBSTITUTIONS ALLOWED.
5. SIGN HEIGHT SHALL BE A MINIMUM OF 7' HIGH FROM THE BOTTOM OF THE LOWEST SIGN ABOVE THE TOP OF THE CURB, UNLESS OTHERWISE NOTED; AND SHALL BE PLACED IN ACCORDANCE WITH NMDOT STANDARD DRAWINGS AND SPECIFICATIONS.
6. STREET NAME LETTERING SHALL COMPLY WITH THE STANDARDS IN THE CURRENT EDITION OF THE MUTCD; THAT IS THE LETTERING SHALL BE LOWER CASE LETTERS WITH UPPERCASE INITIAL LETTERS.

STRIPING AND PAINT NOTES:

1. ALL RETROREFLECTIVE PREFORMED PATTERED PAVEMENT STRIPE SHALL BE 380 IES BY "3M", NO SUBSTITUTIONS .
2. STOP BARS SHALL BE A MINIMUM 12" WIDE; WHITE RETROREFLECTIVE PREFORMED PATTERNED PAVEMENT STRIPE ; AND SHALL BE 380 IES BY "3M" NO SUBSTITUTIONS.
3. CROSSWALK STRIPE SHALL BE 24" WIDE; WHITE RETROREFLECTIVE PREFORMED PATTERNED PAVEMENT STRIPE , ARRANGED IN A CONTINENTAL PATTEREN, THAT IS, LONGITUDINAL LINES PARALLEL TO THE FLOW OF TRAFFIC AND ARRANGED TO AVOID WHEEL PATHS, (MUTCD P.384, SECTION 3B.18); AND SHALL BE 380 IES BY "3M", NO SUBSTITUTIONS.
4. ALL RETROREFLECTIVE PREFORMED PATTERNED PAVEMENT MARKINGS (WORD OR SYMBOL) SHALL BE 380 IES BY "3M", NO SUBSTITUTIONS.
5. RETRO-REFLECTORIZED PAINT PAVEMENT MARKINGS STRIPES - FOR HIGH-BUILT PAINT, USE TWO COATS AND FOR REGULAR PAINT USE THREE COATS. (DOUBLE APPLICATION TO BE APPLIED WITHIN 14 DAYS.)
6. ALL STRIPING SHALL CONFORM TO THE MANUAL ON UNIFORM TRAFFIC CONTROL DEVICES, (MUTCD) - CURRENT EDITION, AND THE NMDOT SSHBC

0 60 120
SCALE: 1" = 60'

REVISION

DESIGNED SEG
DRAWN SEG
CHECKED JL
DATE 12.12.2024


COMMUNITY DESIGN SOLUTIONS
9384 Valley View Drive NW, Suite 100
Albuquerque, NM 87144
505.366.4187


STAMP

SHELDON E. GREER — NEW MEXICO — 17154 — REGISTERED PROFESSIONAL ENGINEER — 12/12/2024

THIS DRAWING IS INCOMPLETE AND NOT TO BE USED FOR CONSTRUCTION UNLESS IT IS STAMPED, SIGNED AND DATED

nm811 Know what's below. Call before you dig.

PROJ. #: 04197.006

PROJECT NAME: PULTE CAJA DEL ORO PHASE 2

SHEET TITLE: OVERALL SIGNING AND STRIPING PLAN

SUBMITTED FOR: CONSTRUCTION

SHEET NUMBER: C-121

NAME: P:\04197 Pulte\04197.006 Pulte Caja del Oro\3. DWG\Sheets\Phase II\C-122 Overall Signing and Striping Plan.dwg PLOT DATE: Dec 12, 2024 12:36pm

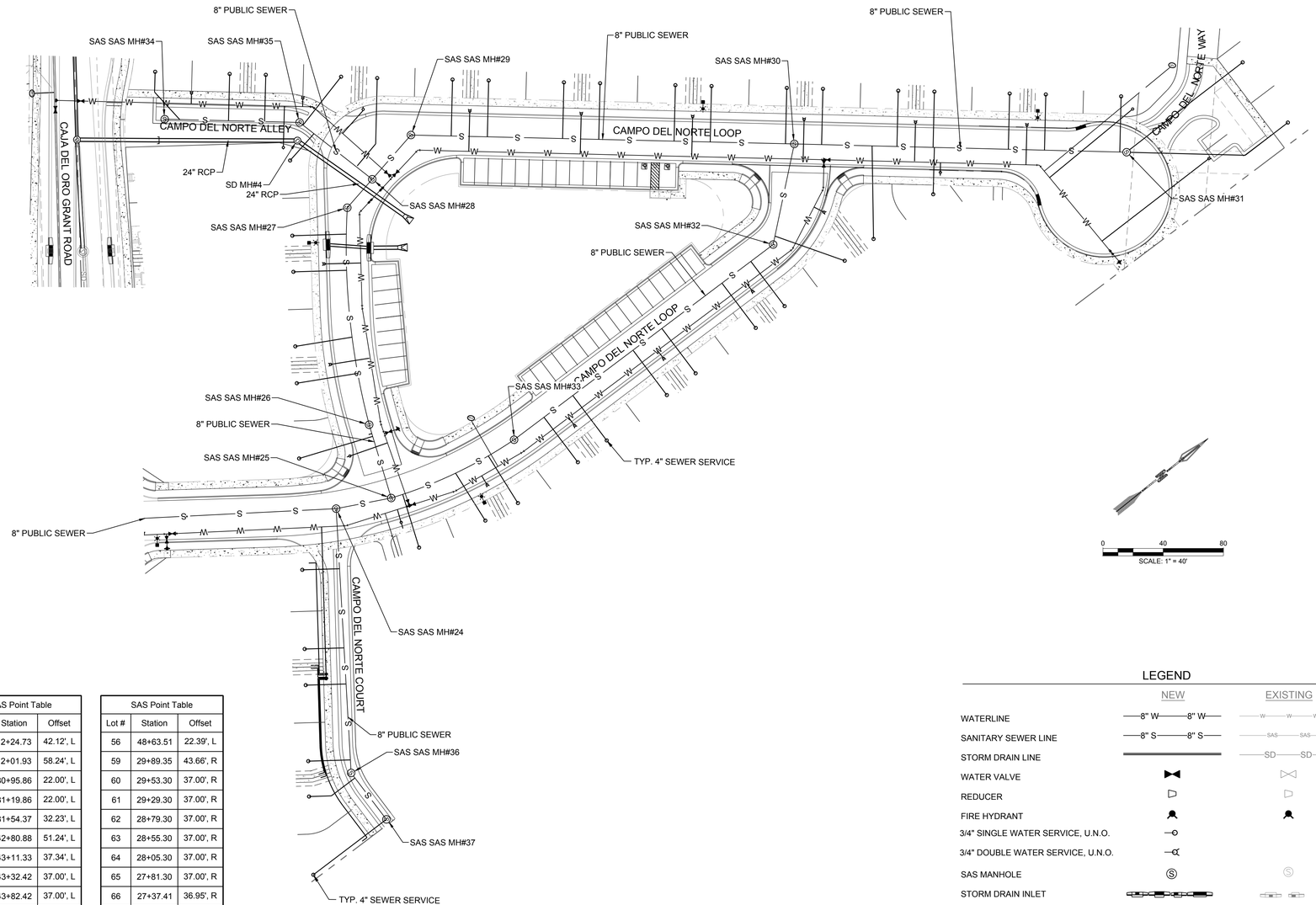


0 40 80
SCALE: 1" = 40'

| SAS Point Table | | |
|---|---|---|
| Lot # | Station | Offset |
| | | 0.00', |
| | | 0.00', |
| | | 0.00', |
| | | 0.00', |
| | | 0.00', |
| | | 0.00', |
| | | 0.00', |
| | | 0.00', |
| | | 0.00', |
| 1 | 61+94.66 | 21.51', L |
| 2 | 61+40.74 | 22.00', L |
| 4 | 60+75.70 | 22.00', L |
| 5 | 11+63.58 | 59.11', L |
| 6 | 11+36.29 | 42.64', L |
| 7 | 11+20.94 | 38.13', L |
| 8 | 10+81.92 | 36.99', L |
| 10 | 10+31.43 | 46.39', L |
| 11 | 106+81.11 | 22.00', R |
| 12 | 107+31.41 | 22.03', R |
| 13 | 107+55.41 | 22.02', R |

| SAS Point Table | | |
|---|---|---|
| Lot # | Station | Offset |
| 14 | 20+27.19 | 61.24', R |
| 15 | 20+39.06 | 48.81', R |
| 16 | 20+70.24 | 37.13', R |
| 17 | 20+92.49 | 37.00', R |
| 18 | 21+42.49 | 37.00', R |
| 19 | 21+64.41 | 37.17', R |
| 20 | 21+95.12 | 50.38', R |
| 21 | 22+06.84 | 62.82', R |
| 22 | 22+29.61 | 88.07', R |
| 23 | 16+96.88 | 36.58', L |
| 24 | 16+53.72 | 36.99', L |
| 25 | 16+32.35 | 37.00', L |
| 26 | 15+88.62 | 36.99', L |
| 27 | 15+67.25 | 37.00', L |
| 28 | 15+21.03 | 37.00', L |
| 29 | 14+97.03 | 37.00', L |
| 30 | 14+53.42 | 35.94', L |
| 31 | 13+60.71 | 37.00', L |
| 32 | 13+10.73 | 37.00', L |
| 33 | 12+86.73 | 37.00', L |

| SAS Point Table | | |
|---|---|---|
| Lot # | Station | Offset |
| 35 | 12+24.73 | 42.12', L |
| 36 | 12+01.93 | 58.24', L |
| 38 | 80+95.86 | 22.00', L |
| 39 | 81+19.86 | 22.00', L |
| 40 | 81+54.37 | 32.23', L |
| 41 | 42+80.88 | 51.24', L |
| 42 | 43+11.33 | 37.34', L |
| 43 | 43+32.42 | 37.00', L |
| 44 | 43+82.42 | 37.00', L |
| 45 | 44+06.42 | 37.00', L |
| 46 | 44+56.42 | 37.00', L |
| 47 | 44+80.42 | 37.00', L |
| 48 | 45+30.42 | 37.00', L |
| 49 | 45+54.42 | 37.00', L |
| 50 | 46+04.42 | 37.00', L |
| 51 | 46+28.42 | 37.00', L |
| 52 | 46+78.42 | 37.00', L |
| 53 | 47+02.42 | 37.00', L |
| 54 | 47+39.42 | 37.00', L |
| 55 | 48+32.49 | 61.60', L |

| SAS Point Table | | |
|---|---|---|
| Lot # | Station | Offset |
| 56 | 48+63.51 | 22.39', L |
| 59 | 29+89.35 | 43.66', R |
| 60 | 29+53.30 | 37.00', R |
| 61 | 29+29.30 | 37.00', R |
| 62 | 28+79.30 | 37.00', R |
| 63 | 28+55.30 | 37.00', R |
| 64 | 28+05.30 | 37.00', R |
| 65 | 27+81.30 | 37.00', R |
| 66 | 27+37.41 | 36.95', R |
| 67 | 27+15.54 | 36.93', R |
| 68 | 26+73.22 | 36.93', R |
| 70 | 72+28.34 | 28.89', R |
| 71 | 72+12.44 | 22.50', R |
| 73 | 71+40.87 | 22.00', R |
| 74 | 70+88.26 | 22.00', R |
| 75 | 40+71.15 | 51.03', L |
| 76 | 41+14.75 | 40.45', L |
| 77 | 41+36.32 | 38.08', L |
| 78 | 41+83.10 | 37.00', L |
| 79 | 42+03.17 | 37.62', L |

## LEGEND

| | NEW | EXISTING |
|---|---|---|
| WATERLINE | 8" W 8" W | W W W |
| SANITARY SEWER LINE | 8" S 8" S | SAS SAS |
| STORM DRAIN LINE | | SD SD |
| WATER VALVE | | |
| REDUCER | | |
| FIRE HYDRANT | | |
| 3/4" SINGLE WATER SERVICE, U.N.O. | | |
| 3/4" DOUBLE WATER SERVICE, U.N.O. | | |
| SAS MANHOLE | Ⓢ | Ⓢ |
| STORM DRAIN INLET | | |
| STORM DRAIN MANHOLE | Ⓓ | |
| SANITARY SEWER SERVICE | | |
| LIGHT POLE | | |

## GENERAL NOTES:

1. ALL SANITARY SEWER MANHOLES SHALL BE 48" DIA., TYPE E UNLESS OTHERWISE APPROVED BY THE ENGINEER.
2. ALL SANITARY SEWER SERVICES SHALL EXTEND UNDER THE FULL WIDTH OF THE PUBLIC UTILITY EASEMENTS.
3. UTILITY CONDUIT LOCATIONS TO BE DETERMINED BY OTHERS.
4. ALL SANITARY SEWER MAIN LINES TO BE SDR-35 PVC

DESIGNED SEG
DRAWN SEG
CHECKED JL
DATE 12.12.2024

REVISION

COMMUNITY DESIGN SOLUTIONS
9384 Valley View Drive NW, Suite 100
Albuquerque, NM 87144
505.366.4187

STAMP

SHELDON E. GREER
NEW MEXICO
17154
12/12/2024
REGISTERED PROFESSIONAL ENGINEER

THIS DRAWING IS INCOMPLETE AND NOT TO BE USED FOR CONSTRUCTION UNLESS IT IS STAMPED, SIGNED AND DATED

nm811 Know what's below. Call before you dig.

PROJ. #: 04197.006

PROJECT NAME: PULTE CAJA DEL ORO PHASE 2

SHEET TITLE: OVERALL UTILITY PLAN

SUBMITTED FOR: CONSTRUCTION

SHEET NUMBER: C-122

NAME: P:\04197 Pulte\04197.006 Pulte Caja del Oro\3. DWG\Sheets\Phase II\C-123 Overall Utility Plan.dwg PLOT DATE: Dec 12, 2024 12:36pm

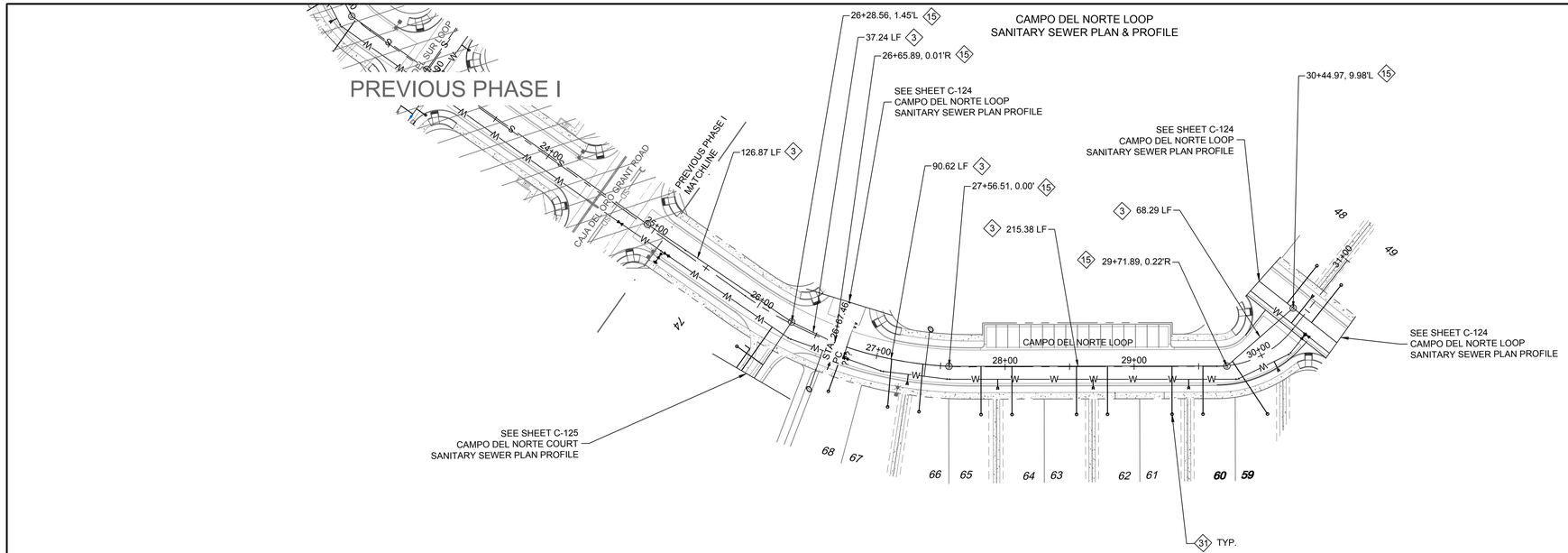


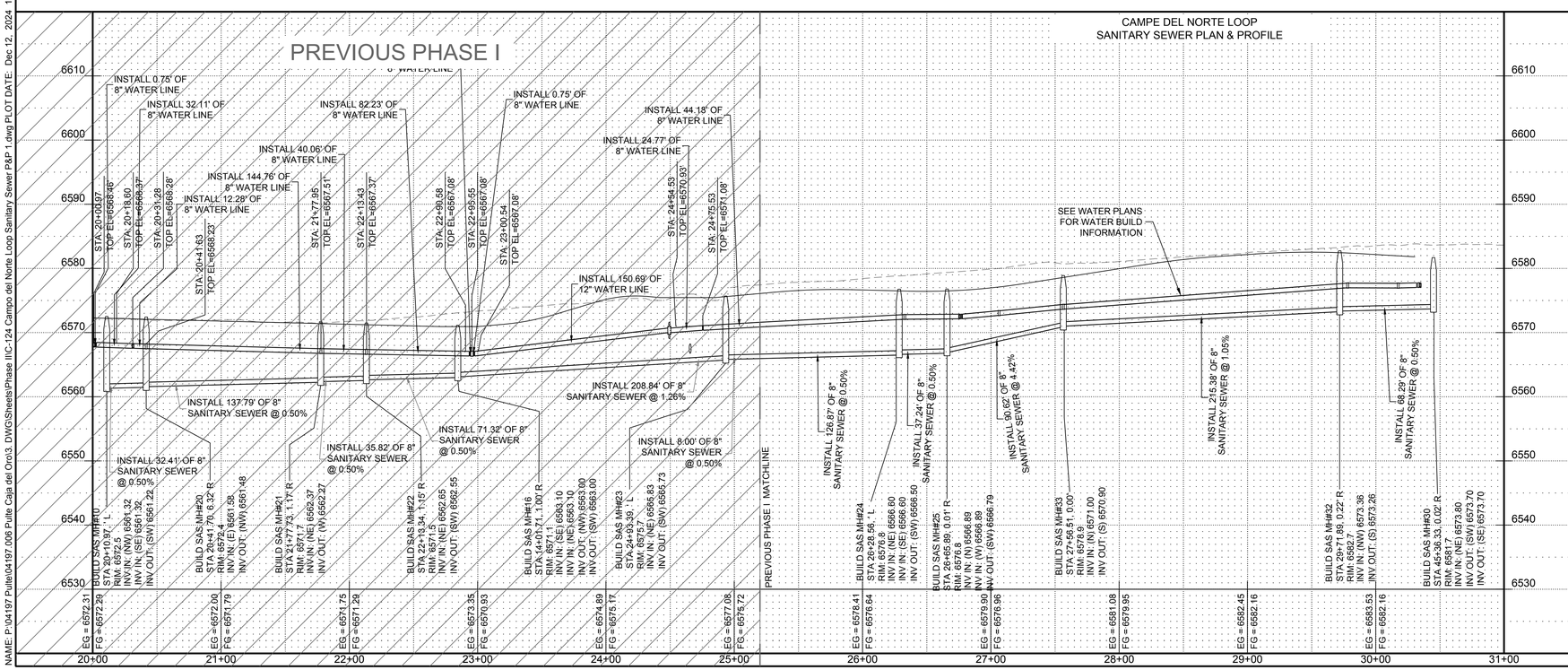


## SEWER CONSTRUCTION NOTES

| I.D.# | DESCRIPTION |
|---|---|
| 3 | INSTALL 8" SEWER PIPE PER STD. SPEC. SEC. 901 |
| 15 | INSTALL 4' DIA. MANHOLE PER CoSF STD DWG #SAS-2 |
| 31 | INSTALL 4" SEWER SERVICE PER CITY OF SANTA FE DRAWING #SAS-10 |

DESIGNED SEG
DRAWN SEG
CHECKED JL
DATE 12.12.2024

REVISION

COMMUNITY DESIGN SOLUTIONS
9384 Valley View Drive NW, Suite 100
Albuquerque, NM 87144
505.366.4187

STAMP

SHELDON E. GREER
NEW MEXICO
17154
REGISTERED PROFESSIONAL ENGINEER
10/10/2024

THIS DRAWING IS INCOMPLETE AND NOT TO BE USED FOR CONSTRUCTION UNLESS IT IS STAMPED, SIGNED AND DATED

nm811 Know what's below. Call before you dig.

PROJ. #: 04197.006

PROJECT NAME: PULTE CAJA DEL ORO PHASE 2

SHEET TITLE: CAMPO DEL NORTE LOOP SANITARY SEWER P&P 1

SUBMITTED FOR: CONSTRUCTION

SHEET NUMBER: C-123

NAME: P:\04197 Pulte\04197.006 Pulte Caja del Oro\3. DWG\Sheets\Phase II\C-124 Campo del Norte Loop Sanitary Sewer P&P 1.dwg PLOT DATE: Dec 12, 2024 12:37pm

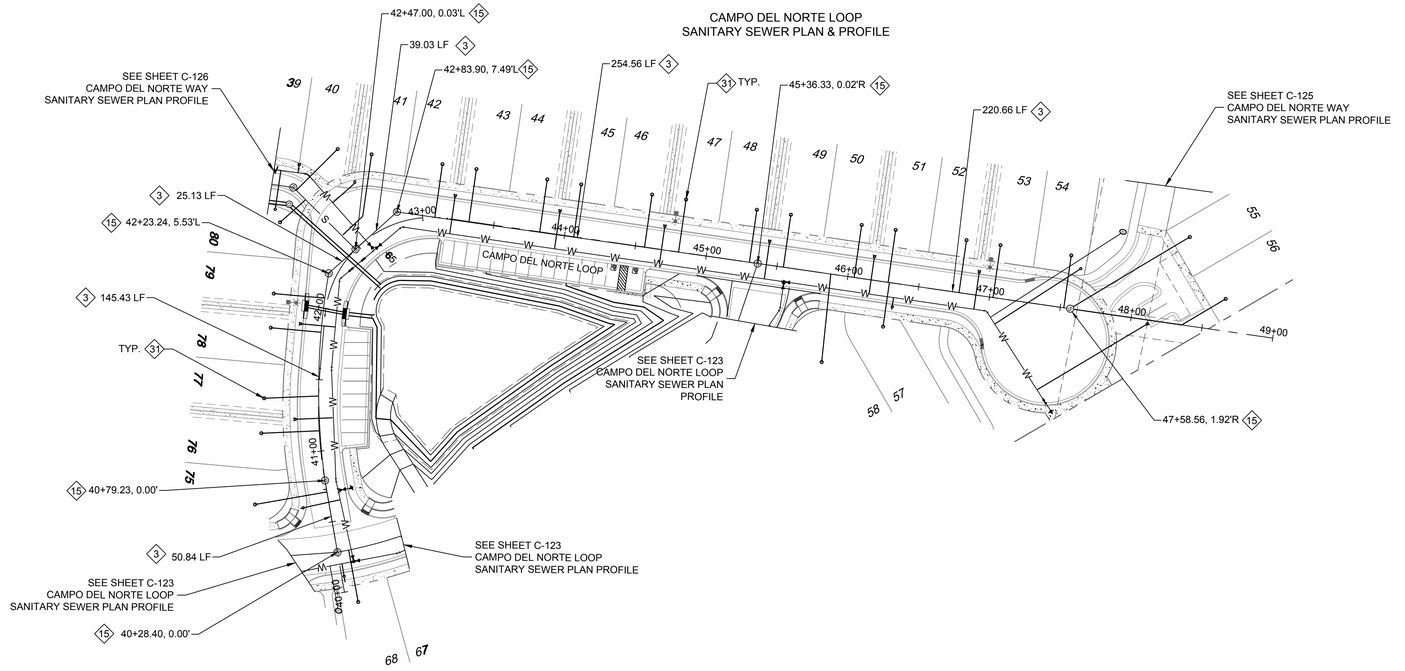


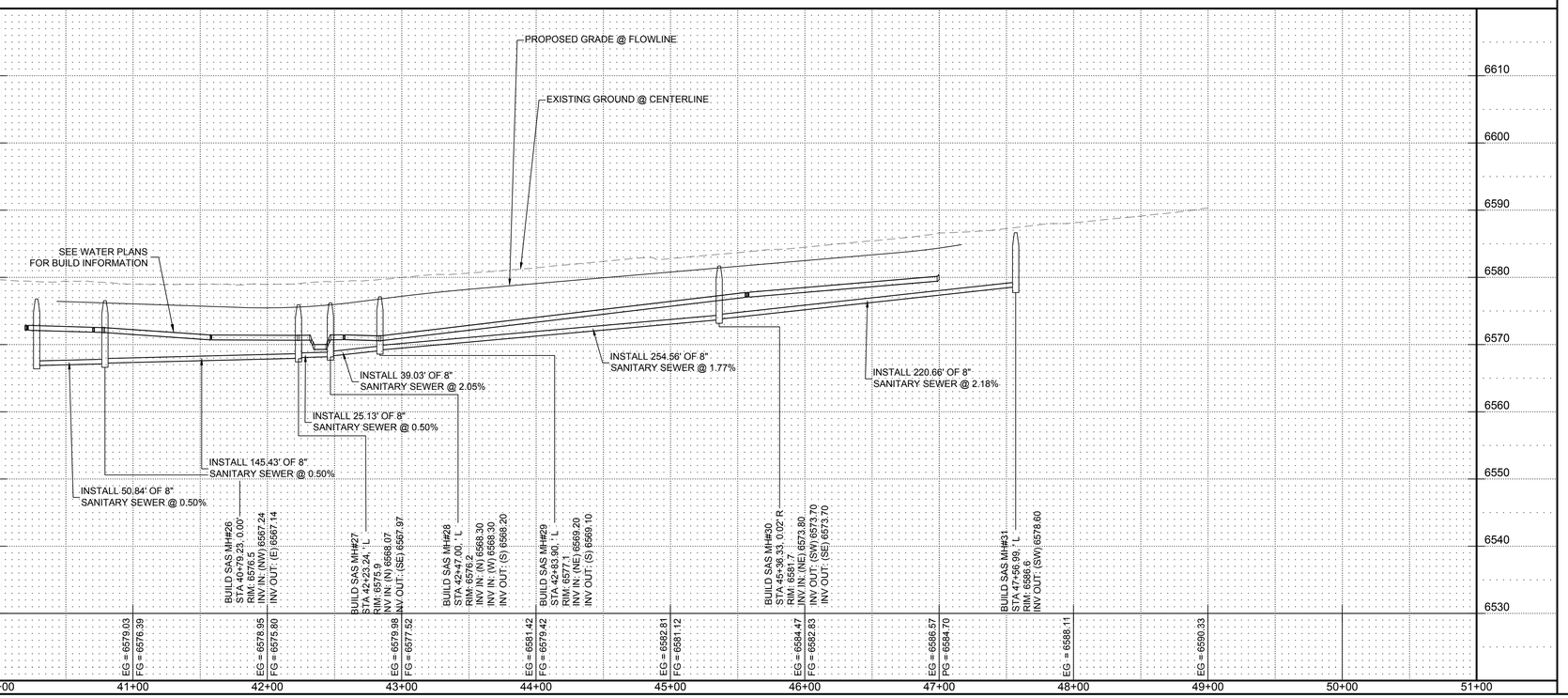


## SEWER CONSTRUCTION NOTES

| I.D.# | DESCRIPTION |
|---|---|
| 3 | INSTALL 8" SEWER PIPE PER STD. SPEC. SEC. 901 |
| 15 | INSTALL 4' DIA. MANHOLE PER CoSF STD DWG #SAS-2 |
| 31 | INSTALL 4" SEWER SERVICE PER CITY OF SANTA FE DRAWING #SAS-10 |

## LEGEND

- WATERLINE — W
- SANITARY SEWER LINE — S
- STORMDRAIN LINE — SD
- WATER VALVE
- STORM DRAIN MANHOLE
- FIRE HYDRANT
- SINGLE WATER SERVICE
- DOUBLE WATER SERVICE
- SAS MANHOLE
- SANITARY SEWER SERVICE

SCALE:
HORIZONTAL: 1" = 50'
VERTICAL: 1" = 10'

DESIGNED SEG
DRAWN SEG
CHECKED JL
DATE 12.12.2024

REVISION

COMMUNITY DESIGN SOLUTIONS
9384 Valley View Drive NW, Suite 100
Albuquerque, NM 87144
505.366.4187

STAMP

SHELDON E. GREER
NEW MEXICO
17154
PROFESSIONAL ENGINEER
10/10/2024

THIS DRAWING IS INCOMPLETE AND NOT TO BE USED FOR CONSTRUCTION UNLESS IT IS STAMPED, SIGNED AND DATED

nm811 Know what's below. Call before you dig.

PROJ. #: 04197.006

PROJECT NAME: PULTE CAJA DEL ORO PHASE 2

SHEET TITLE: CAMPO DEL NORTE LOOP SANITARY SEWER P&P 2

SUBMITTED FOR: CONSTRUCTION

SHEET NUMBER: C-124

NAME: P:\04197 Pulte\04197.006 Pulte Caja del Oro\3. DWG\Sheets\Phase II\C-125 Campo del Norte Loop Sanitary Sewer P&P 2.dwg PLOT DATE: Dec 12, 2024 12:37pm

## CAMPO DEL NORTE COURT
## SANITARY SEWER PLAN & PROFILE

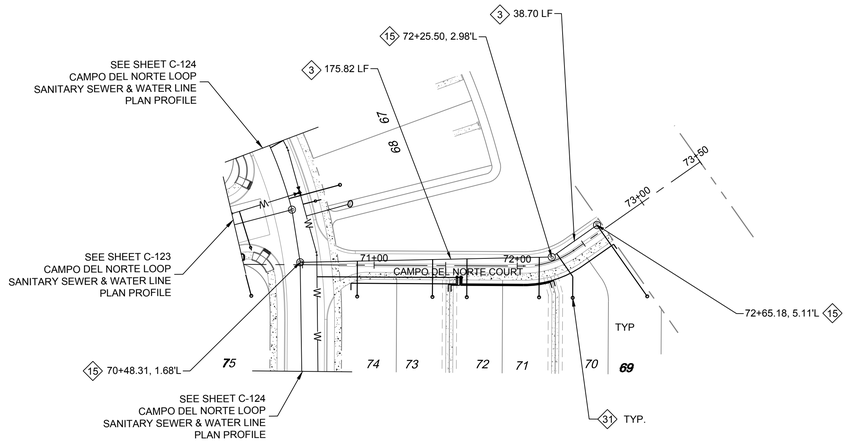


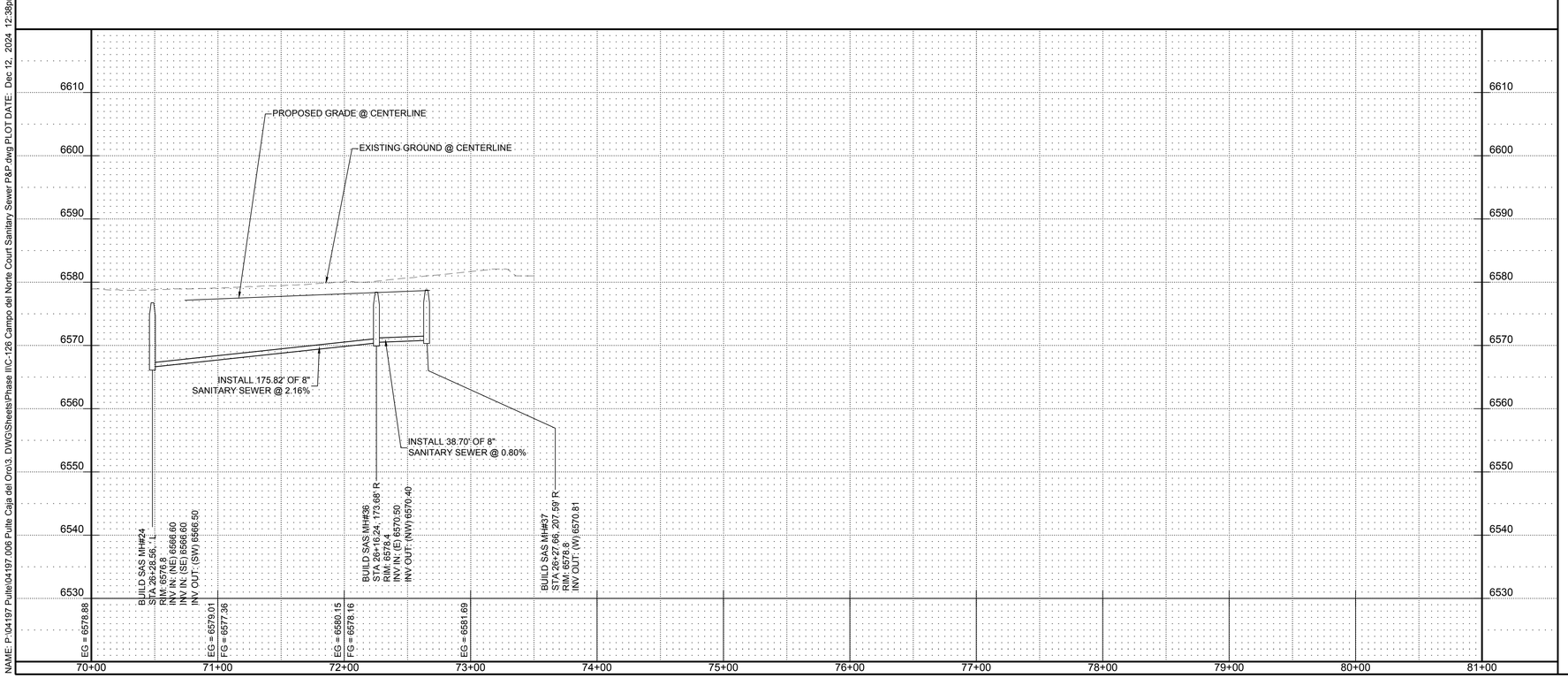


### SEWER CONSTRUCTION NOTES

| I.D.# | DESCRIPTION |
|---|---|
| 3 | INSTALL 8" SEWER PIPE PER STD. SPEC. SEC. 901 |
| 15 | INSTALL 4' DIA. MANHOLE PER CoSF STD DWG #SAS-2 |
| 31 | INSTALL 4" SEWER SERVICE PER CITY OF SANTA FE DRAWING #SAS-10 |

### LEGEND

| | |
|---|---|
| WATERLINE | W |
| SANITARY SEWER LINE | S |
| STORMDRAIN LINE | SD |
| WATER VALVE | |
| STORM DRAIN MANHOLE | D |
| FIRE HYDRANT | |
| SINGLE WATER SERVICE | |
| DOUBLE WATER SERVICE | |
| SAS MANHOLE | S |
| SANITARY SEWER SERVICE | |

SCALE:
HORIZONTAL: 1" = 50'
VERTICAL: 1" = 10'

DESIGNED SEG
DRAWN SEG
CHECKED JL
DATE 12.12.2024

REVISION


COMMUNITY DESIGN SOLUTIONS
9384 Valley View Drive NW, Suite 100
Albuquerque, NM 87144
505.366.4187


STAMP

SHELDON E. GREER
NEW MEXICO
17154
PROFESSIONAL ENGINEER
10/10/2024

THIS DRAWING IS INCOMPLETE AND NOT TO BE USED FOR CONSTRUCTION UNLESS IT IS STAMPED, SIGNED AND DATED

nm811 Know what's below. Call before you dig.

PROJ. #: 04197.006

PROJECT NAME: PULTE CAJA DEL ORO PHASE 2

SHEET TITLE: CAMPO DEL NORTE COURT SANITARY SEWER P&P

SUBMITTED FOR: CONSTRUCTION

SHEET NUMBER: C-125

NAME: P:\04197 Pulte\04197.006 Pulte Caja del Oro\3. DWG\Sheets\Phase II\C-126 Campo del Norte Court Sanitary Sewer P&P.dwg PLOT DATE: Dec 12, 2024 12:38pm

CAMPO DEL NORTE ALLEY
SANITARY SEWER PLAN & PROFILE

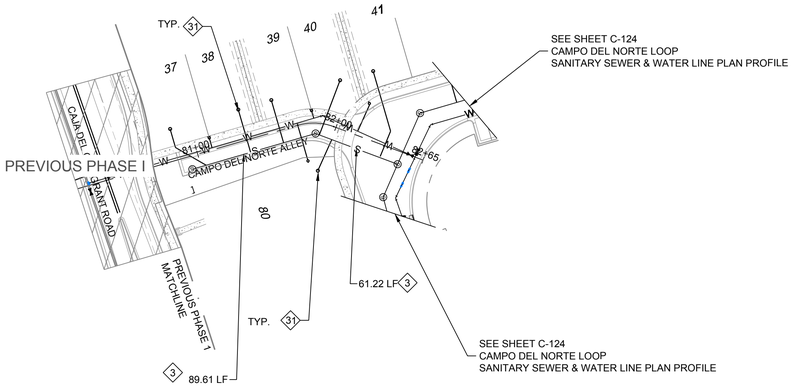


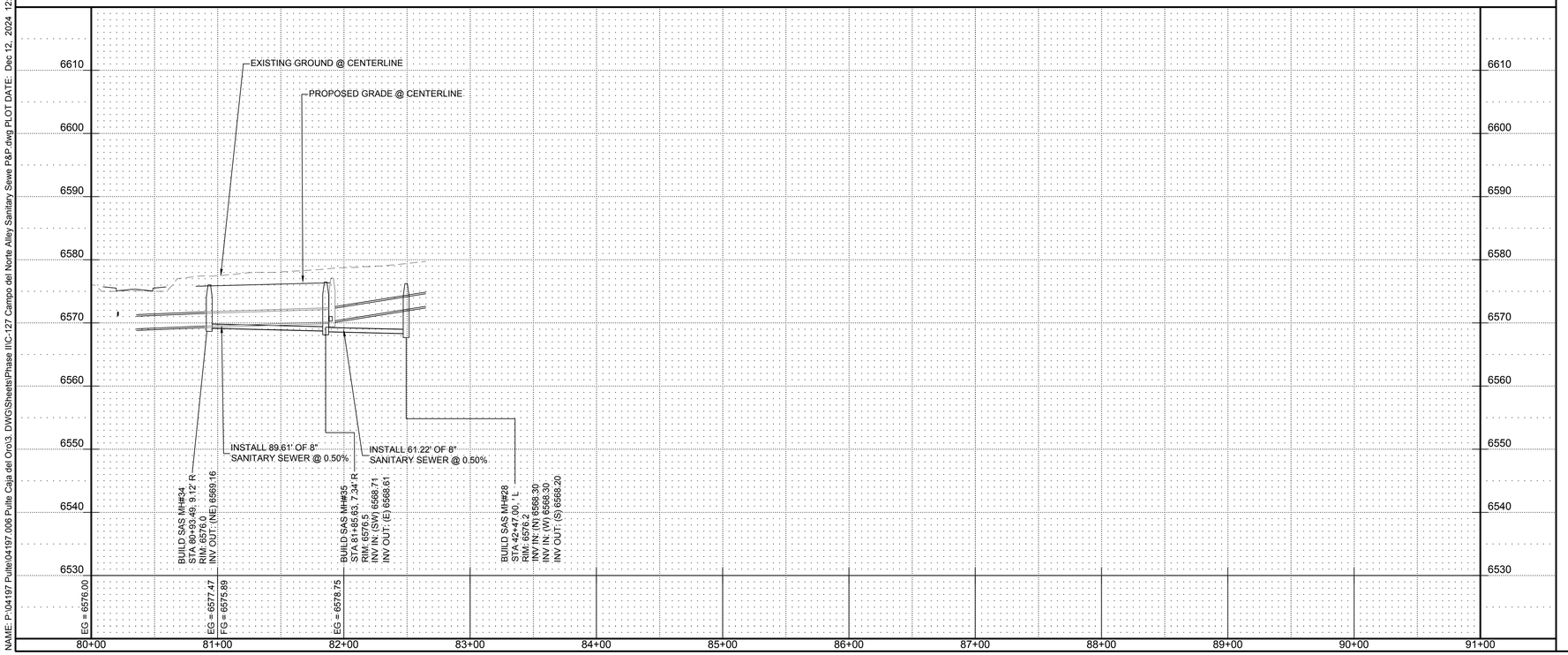


## SEWER CONSTRUCTION NOTES

| I.D.# | DESCRIPTION |
|---|---|
| 3 | INSTALL 8" SEWER PIPE PER STD. SPEC. SEC. 901 |
| 15 | INSTALL 4' DIA. MANHOLE PER CoSF STD DWG #SAS-2 |
| 31 | INSTALL 4" SEWER SERVICE PER CITY OF SANTA FE DRAWING #SAS-10 |

## LEGEND

- WATERLINE — W
- SANITARY SEWER LINE — S
- STORMDRAIN LINE — SD
- WATER VALVE — W
- STORM DRAIN MANHOLE — D
- FIRE HYDRANT
- SINGLE WATER SERVICE
- DOUBLE WATER SERVICE
- SAS MANHOLE — S
- SANITARY SEWER SERVICE

SCALE:
HORIZONTAL: 1" = 50'
VERTICAL: 1" = 10'

DESIGNED SEG
DRAWN SEG
CHECKED JL
DATE 12.12.2024

REVISION

COMMUNITY DESIGN SOLUTIONS
9384 Valley View Drive NW, Suite 100
Albuquerque, NM 87144
505.366.4187

STAMP

SHELDON E. GREER
NEW MEXICO
17154
PROFESSIONAL ENGINEER
10/10/2024

THIS DRAWING IS INCOMPLETE AND NOT TO BE USED FOR CONSTRUCTION UNLESS IT IS STAMPED, SIGNED AND DATED

nm811 Know what's below. Call before you dig.

PROJ. #: 04197.006

PROJECT NAME: PULTE CAJA DEL ORO PHASE 2

SHEET TITLE: CAMPO DEL NORTE ALLEY SANITARY SEWER P&P

SUBMITTED FOR: CONSTRUCTION

SHEET NUMBER: C-126

NAME: P:\04197 Pulte\04197.006 Pulte Caja del Oro\3. DWG\Sheets\Phase II\C-127 Campo del Norte Alley Sanitary Sewe P&P.dwg PLOT DATE: Dec 12, 2024 12:38pm

## ONSITE STORM DRAIN PLAN & PROFILE

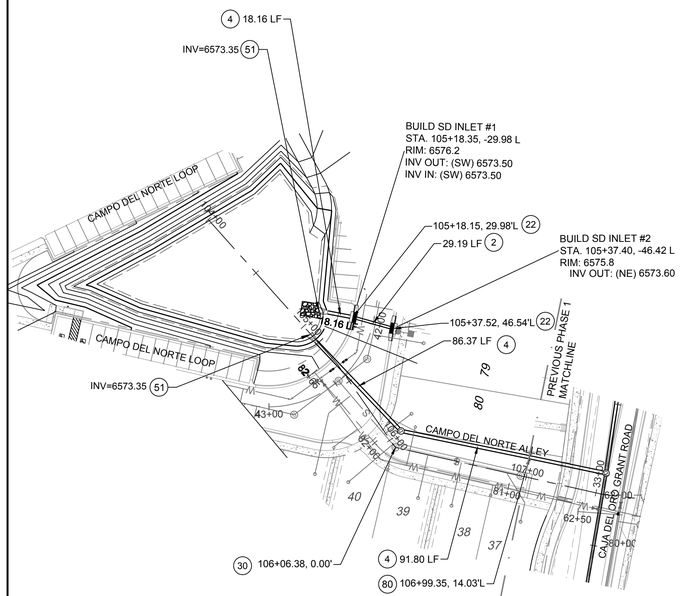


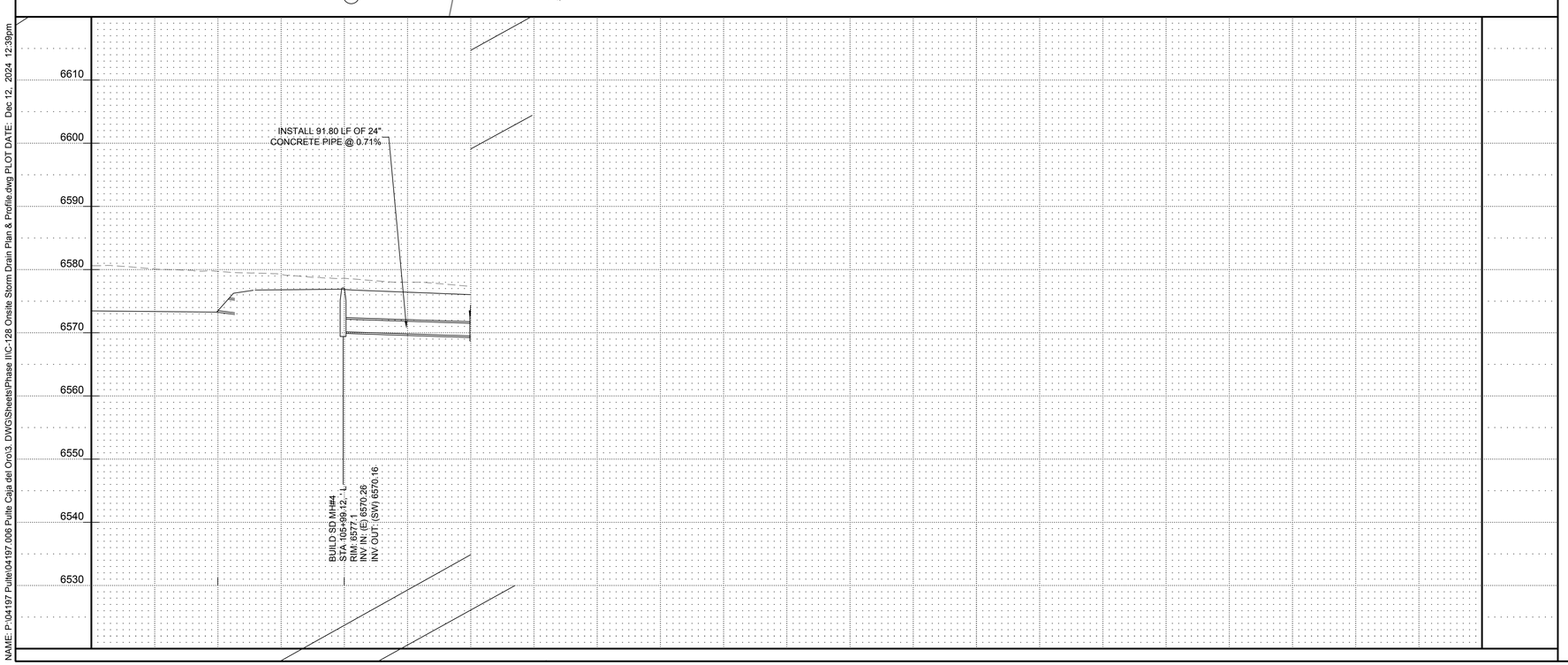


## STORM DRAIN CONSTRUCTION NOTES

| I.D.# | DESCRIPTION |
|---|---|
| (2) | INSTALL CLASS IV 18" STORM DRAIN PIPE |
| (4) | INSTALL CLASS III 24" STORM DRAIN PIPE |
| (22) | INSTALL DOUBLE GRATE INLET PER NMDOT STD DWG 623 14-1/3 |
| (30) | INSTALL 4' DIA. MANHOLE PER NM APWA STD. DTL. 2101 |
| (51) | INSTALL 24" STORM DRAIN RCP END SECTION PER NMDOT STD DETAIL 570-02-2/2 |
| (58) | CONNECT NEW STORM DRAIN LINE TO EXISTING STORM DRAIN MANHOLE |
| (80) | CONNECT TO EXISTING STORM STUB |

SCALE:
HORIZONTAL: 1" = 50'
VERTICAL: 1" = 10'

DESIGNED SEG
DRAWN SEG
CHECKED JL
DATE 12.12.2024

REVISION


COMMUNITY DESIGN SOLUTIONS
9384 Valley View Drive NW, Suite 100
Albuquerque, NM 87144
505.366.4187


STAMP

SHELDON E. GREER NEW MEXICO 17154 PROFESSIONAL ENGINEER 10/10/2024

THIS DRAWING IS INCOMPLETE AND NOT TO BE USED FOR CONSTRUCTION UNLESS IT IS STAMPED, SIGNED AND DATED

nm811 Know what's below. Call before you dig.

PROJ. #: 04197.006

PROJECT NAME: PULTE CAJA DEL ORO PHASE 2

SHEET TITLE: ONSITE STORM DRAIN PLAN & PROFILE

SUBMITTED FOR: CONSTRUCTION

SHEET NUMBER: C-127

NAME: P:\04197 Pulte\04197.006 Pulte Caja del Oro\3. DWG\Sheets\Phase II\C-128 Onsite Storm Drain Plan & Profile.dwg PLOT DATE: Dec 12, 2024 12:39pm

STORM WATER POLLUTION PREVENTION PLAN:

CAJA DEL ORO
SANTA FE, NEW MEXICO

SITE AND PROJECT DESCRIPTION

THE EXISTING SITE IS DISTURBED EARTHWORK IN SUPPORT OF THE CONSTRUCTION FOR CAJA DEL ORO. THE SANTA FE RIVER IS SOUTH OF THE SITE.

LOCATION:

LANDS OF DON JUAN LYING WITHIN
SECTION 31, T17N, R9E, N.M.P.M.
CITY OF SANTA FE, SANTA FE COUNTY, NEW MEXICO

16.21 ACRES

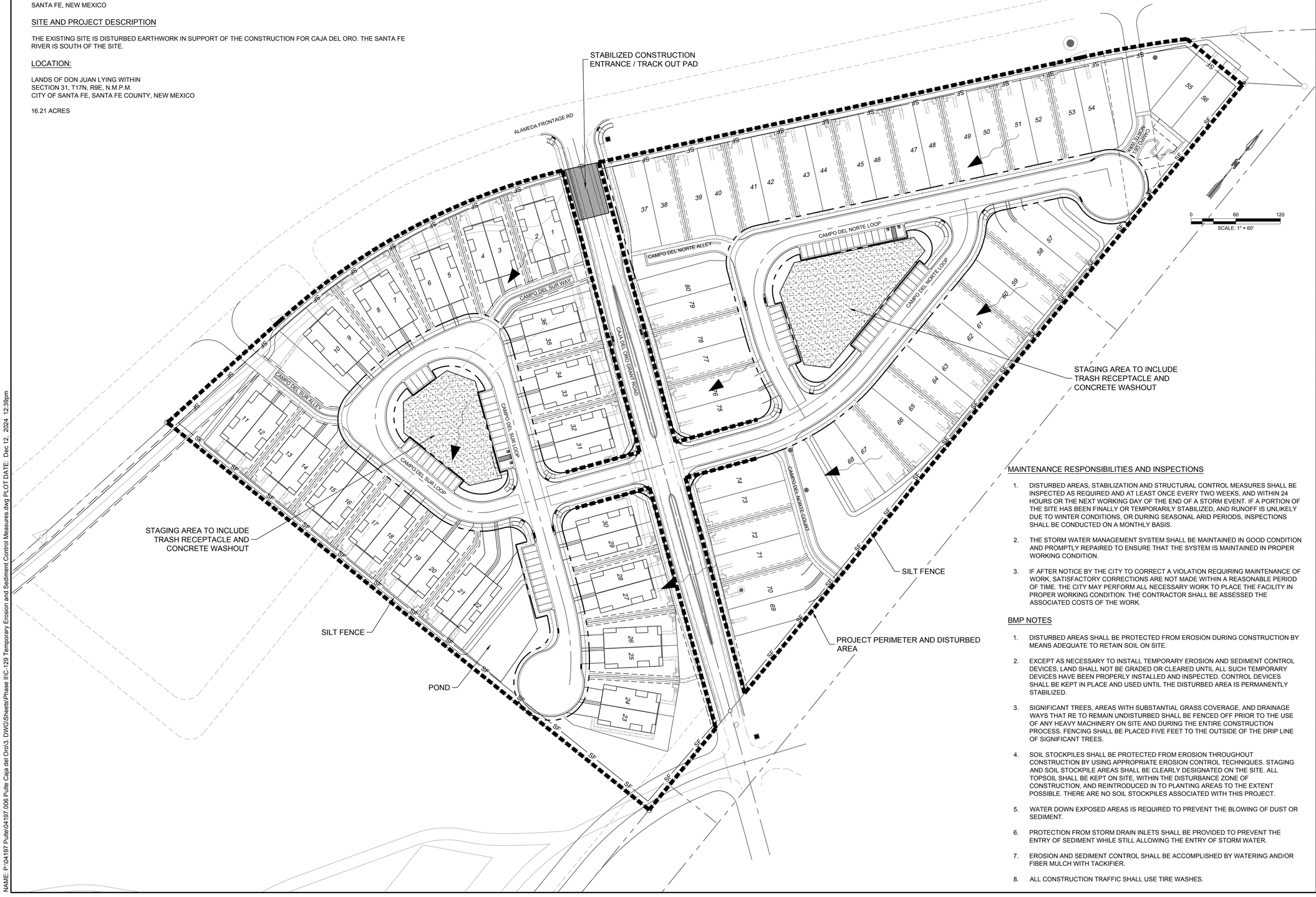


MAINTENANCE RESPONSIBILITIES AND INSPECTIONS

1. DISTURBED AREAS, STABILIZATION AND STRUCTURAL CONTROL MEASURES SHALL BE INSPECTED AS REQUIRED AND AT LEAST ONCE EVERY TWO WEEKS, AND WITHIN 24 HOURS OR THE NEXT WORKING DAY OF THE END OF A STORM EVENT. IF A PORTION OF THE SITE HAS BEEN FINALLY OR TEMPORARILY STABILIZED, AND RUNOFF IS UNLIKELY DUE TO WINTER CONDITIONS, OR DURING SEASONAL ARID PERIODS, INSPECTIONS SHALL BE CONDUCTED ON A MONTHLY BASIS.
2. THE STORM WATER MANAGEMENT SYSTEM SHALL BE MAINTAINED IN GOOD CONDITION AND PROMPTLY REPAIRED TO ENSURE THAT THE SYSTEM IS MAINTAINED IN PROPER WORKING CONDITION.
3. IF AFTER NOTICE BY THE CITY TO CORRECT A VIOLATION REQUIRING MAINTENANCE OF WORK, SATISFACTORY CORRECTIONS ARE NOT MADE WITHIN A REASONABLE PERIOD OF TIME. THE CITY MAY PERFORM ALL NECESSARY WORK TO PLACE THE FACILITY IN PROPER WORKING CONDITION. THE CONTRACTOR SHALL BE ASSESSED THE ASSOCIATED COSTS OF THE WORK.

BMP NOTES

1. DISTURBED AREAS SHALL BE PROTECTED FROM EROSION DURING CONSTRUCTION BY MEANS ADEQUATE TO RETAIN SOIL ON SITE.
2. EXCEPT AS NECESSARY TO INSTALL TEMPORARY EROSION AND SEDIMENT CONTROL DEVICES, LAND SHALL NOT BE GRADED OR CLEARED UNTIL ALL SUCH TEMPORARY DEVICES HAVE BEEN PROPERLY INSTALLED AND INSPECTED. CONTROL DEVICES SHALL BE KEPT IN PLACE AND USED UNTIL THE DISTURBED AREA IS PERMANENTLY STABILIZED.
3. SIGNIFICANT TREES, AREAS WITH SUBSTANTIAL GRASS COVERAGE, AND DRAINAGE WAYS THAT RE TO REMAIN UNDISTURBED SHALL BE FENCED OFF PRIOR TO THE USE OF ANY HEAVY MACHINERY ON SITE AND DURING THE ENTIRE CONSTRUCTION PROCESS. FENCING SHALL BE PLACED FIVE FEET TO THE OUTSIDE OF THE DRIP LINE OF SIGNIFICANT TREES.
4. SOIL STOCKPILES SHALL BE PROTECTED FROM EROSION THROUGHOUT CONSTRUCTION BY USING APPROPRIATE EROSION CONTROL TECHNIQUES. STAGING AND SOIL STOCKPILE AREAS SHALL BE CLEARLY DESIGNATED ON THE SITE. ALL TOPSOIL SHALL BE KEPT ON SITE, WITHIN THE DISTURBANCE ZONE OF CONSTRUCTION, AND REINTRODUCED IN TO PLANTING AREAS TO THE EXTENT POSSIBLE. THERE ARE NO SOIL STOCKPILES ASSOCIATED WITH THIS PROJECT.
5. WATER DOWN EXPOSED AREAS IS REQUIRED TO PREVENT THE BLOWING OF DUST OR SEDIMENT.
6. PROTECTION FROM STORM DRAIN INLETS SHALL BE PROVIDED TO PREVENT THE ENTRY OF SEDIMENT WHILE STILL ALLOWING THE ENTRY OF STORM WATER.
7. EROSION AND SEDIMENT CONTROL SHALL BE ACCOMPLISHED BY WATERING AND/OR FIBER MULCH WITH TACKIFIER.
8. ALL CONSTRUCTION TRAFFIC SHALL USE TIRE WASHES.

DESIGNED SEG
DRAWN SEG
CHECKED JL
DATE 12.12.2024

REVISION

COMMUNITY DESIGN SOLUTIONS
9384 Valley View Drive NW, Suite 100
Albuquerque, NM 87144
505.366.4187

STAMP

SHELDON E. GREER
NEW MEXICO
17154
PROFESSIONAL ENGINEER
12/12/2024

THIS DRAWING IS INCOMPLETE AND NOT TO BE USED FOR CONSTRUCTION UNLESS IT IS STAMPED, SIGNED AND DATED

nm811 Know what's below. Call before you dig.

PROJ. #: 04197.006

PROJECT NAME: PULTE CAJA DEL ORO PHASE 2

SHEET TITLE: TEMPORARY EROSION AND SEDIMENT CONTROL MEASURES

SUBMITTED FOR: CONSTRUCTION

SHEET NUMBER: C-128

NAME: P:\04197 Pulte\04197.006 Pulte Caja del Oro\3. DWG\Sheets\Phase II\C-129 Temporary Erosion and Sediment Control Measures.dwg PLOT DATE: Dec 12, 2024 12:39pm




0 120 240
SCALE: 1" = 120'

| Slopes Table | | | | |
|---|---|---|---|---|
| Number | Minimum Slope | Maximum Slope | Color | Remarks |
| 1 | 0.00% | 20.00% | | |
| 2 | 20.00% | 30.00% | | Man Made Slope |
| 3 | 30.00% | 99999900.00% | | Man Made Slope |

NAME: P:\04197 Pulte\04197.006 Pulte Caja del Oro\3. DWG\Sheets\Phase II\C-130 Slope Analysis Plan.dwg PLOT DATE: Dec 12, 2024 12:40pm

DESIGNED SEG
DRAWN SEG
CHECKED JL
DATE 12.12.2024

REVISION

COMMUNITY DESIGN SOLUTIONS
9384 Valley View Drive NW, Suite 100
Albuquerque, NM 87144
505.366.4187

STAMP

SHELDON E. GREER
NEW MEXICO
17154
LICENSED PROFESSIONAL ENGINEER
12/12/2024

THIS DRAWING IS INCOMPLETE AND NOT TO BE USED FOR CONSTRUCTION UNLESS IT IS STAMPED, SIGNED AND DATED

nm811 Know what's below. Call before you dig.

PROJ. #: 04197.006

PROJECT NAME: PULTE CAJA DEL ORO PHASE 2

SHEET TITLE: SLOPE ANALYSIS PLAN

SUBMITTED FOR: CONSTRUCTION

SHEET NUMBER: C-129

# PUBLIC WATERLINE IMPROVEMENTS

FOR

# PULTE CAJA DEL ORO PHASE 2

## SANTA FE, NEW MEXICO

DECEMBER 2024

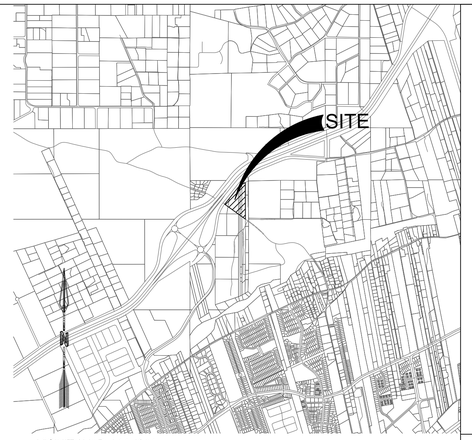


VICINITY MAP: J-14, K-14

PULTE CAJA DEL ORO - PHASE 2
SANTA FE, NEW MEXICO

SHELDON E. GREER
NEW MEXICO
17154
LICENSED PROFESSIONAL ENGINEER
12/6/2024

RESPEC
COMMUNITY DESIGN SOLUTIONS
7770 JEFFERSON STREET SUITE 200
ALBUQUERQUE, NEW MEXICO 87109
WWW.RESPEC.COM PHONE: (505) 253-9718

| WATER SERVICE | | | | |
|---|---|---|---|---|
| LOT NUMBER | ALIGNMENT NAME | STATION | OFFSET | SERVICE TYPE |
| 37 | CAMPO DEL NORTE LOOP ALGN 3 | 42+36.69 | -131.82' | 4-5/8" MULTI-SERVICE Y BRANCH CONNECTION FOR MULTIPLE SERVICES |
| 38 | | | | |
| 39 | CAMPO DEL NORTE LOOP ALGN 3 | 42+54.42 | -70.12' | |
| 40 | | | | |
| 41 | CAMPO DEL NORTE LOOP ALGN 3 | 42+67.16 | -38.72' | SINGLE |
| 42 | CAMPO DEL NORTE LOOP ALGN 3 | 43+20.42 | -15.00' | DOUBLE |
| 43 | | | | |
| 44 | CAMPO DEL NORTE LOOP ALGN 3 | 43+94.42 | -15.00' | DOUBLE |
| 45 | | | | |
| 46 | CAMPO DEL NORTE LOOP ALGN 3 | 44+68.42 | -15.00' | DOUBLE |
| 47 | | | | |
| 48 | CAMPO DEL NORTE LOOP ALGN 3 | 45+42.42 | -15.00' | DOUBLE |
| 49 | | | | |
| 50 | CAMPO DEL NORTE LOOP ALGN 3 | 46+16.42 | -15.00' | DOUBLE |
| 51 | | | | |
| 52 | CAMPO DEL NORTE LOOP ALGN 3 | 46+90.42 | -15.01' | DOUBLE |
| 53 | | | | |
| 54 | CAMPO DEL NORTE LOOP ALGN 3 | 47+55.28 | -14.41' | SINGLE |
| 55 | CAMPO DEL NORTE LOOP ALGN 3 | 48+18.12 | 3.90' | DOUBLE |
| 56 | | | | |
| 57 | CAMPO DEL NORTE LOOP ALGN 3 | 46+33.72 | 15.00' | SINGLE |
| 58 | CAMPO DEL NORTE LOOP ALGN 1 | 30+05.36 | 15.00' | DOUBLE |
| 59 | | | | |
| 60 | CAMPO DEL NORTE LOOP ALGN 1 | 29+42.26 | 15.00' | DOUBLE |
| 61 | | | | |
| 62 | CAMPO DEL NORTE LOOP ALGN 1 | 28+68.24 | 15.00' | DOUBLE |
| 63 | | | | |
| 64 | CAMPO DEL NORTE LOOP ALGN 1 | 27+94.26 | 15.00' | DOUBLE |
| 65 | | | | |
| 66 | CAMPO DEL NORTE LOOP ALGN 1 | 27+26.44 | 15.00' | DOUBLE |
| 67 | | | | |
| 68 | CAMPO DEL NORTE LOOP ALGN 1 | 26+67.46 | 17.40' | SINGLE |
| 69 | ALLEY 3.1 | 71+59.30 | 8.27' | 2 6-5/8 MULTI-SERVICE Y BRANCH CONNECTION FOR MULTIPLE SERVICES |
| 70 | ALLEY 3.1 | 71+59.30 | 8.27' | |
| 71 | ALLEY 3.1 | 71+59.30 | 8.27' | |
| 72 | ALLEY 3.1 | 71+59.30 | 8.27' | |
| 73 | ALLEY 3.1 | 71+59.30 | 8.27' | |
| 74 | ALLEY 3.1 | 71+59.30 | 8.27' | |
| 75 | CAMPO DEL NORTE LOOP ALGN 3 | 40+63.12 | -16.27 | SINGLE |
| 76 | CAMPO DEL NORTE LOOP ALGN 3 | 41+22.78 | -15.00' | DOUBLE |
| 77 | | | | |
| 78 | CAMPO DEL NORTE LOOP ALGN 3 | 41+87.74 | -15.00' | DOUBLE |
| 79 | | | | |
| 80 | CAMPO DEL NORTE LOOP ALGN 3 | 42+36.19 | -60.96' | SINGLE |

| IRRIGATION SERVICE | | | | |
|---|---|---|---|---|
| MASTER VALVE | ALIGNMENT NAME | STATION | OFFSET | SERVICE TYPE |
| MV | CAMPO DEL NORTE LOOP ALGN 3 | 47+85.82 | -58.51' | SINGLE 1-1/2" METER |
| MV2 | CAMPO DEL NORTE LOOP ALGN 1 | 27+39.31 | -27.48' | SINGLE 1" METER |
| MV3 | CAMPO DEL NORTE LOOP ALGN 1 | 26+60.28 | 40.50' | SINGLE 1" METER |

TOTAL NUMBER OF DOMESTIC SERVICES: 36
ALL DOMESTIC SERVICES SHALL BE 5/8 INCH.

TOTAL NUMBER OF IRRIGATION SERVICES: 3
TWO IRRIGATION SERVICES SHALL BE 1 INCH.
ONE IRRIGATION SERVICE SHALL BE 1-1/2 INCH.

## Sheet List Table


| Sheet Number | Sheet Title |
|---|---|
| WATER | |
| C-130 | Cover - Waterlines |
| C-131 | Overall Water Plan |
| C-132 | Road Cross Sections - Waterlines |
| C-133 | Campo del Norte Loop Waterline P&P 1 |
| C-134 | Campo del Norte Loop Waterline P&P 2 |
| C-135 | Campo del Norte Alley Waterline P&P |


INSTALL ALL:
SINGLE DOMESTIC SERVICES PER CoSFW DETAIL 02.
DOUBLE SERVICES PER CoSFW DETAIL 06.
4 5/8" MULTI-SERVICE Y BRANCH PER CoSFW DETAIL 27.
2 6x5/8" MULTI-Y PER CoSFW DETAIL 28.
SINGLE 1-1/2" IRRIGATION SERVICES PER CoSFW DETAIL 04.
SINGLE 1" IRRIGATION SERVICES PER DETAIL 03.

| WATER SERVICE LENGTHS | |
|---|---|
| SERVICE LENGTH | SERVICE SIZE (DIA) |
| 0 - 50' | 5/8" |
| 50' - 300' | 1" |
| 300' - 400' | 1 1/2" |

THE LENGTHS IN THIS TABLE ARE WATER SERVICE LINE LENGTHS MEASURED FROM THE METER TO THE BUILDING PAD. LONGER SERVICE LINES WILL REQUIRE A LARGER DIAMETER TO REDUCE FRICTION LOSSES. USE THE DIAMETERS SHOWN FOR SERVICE LINES OF THE LENGTH RANGES SHOWN IN THE TABLE.

ALL DOMESTIC WATER METERS WILL BE 5/8". ONLY THE PRIVATE SERVICE LINE SIZES WILL BE CHANGED WHERE NEEDED. A REDUCER WILL BE INSTALLED ON THE PRIVATE SIDE OF THE METER BOX, AND THE SERVICE LINE WILL BE UPSIZED AT THE REDUCER.

WHERE SERVICE LINES CROSS UNDER WALL FOOTINGS, A 3" DIAMETER CONDUIT WILL BE PROVIDED UNDER THE FOOTING TO CARRY THE SERVICE LINE.

RECORD DRAWINGS
THIS RECORD DOCUMENT HAS BEEN PREPARED BASED ON THE BEST AVAILABLE INFORMATION AS PROVIDED BY OTHERS. _____ CERTIFIES THAT THE INFORMATION SHOWN IS A REASONABLE DOCUMENTATION OF THE FINAL CONSTRUCTION.

ENGINEER _____ PE _____ DATE _____

RECORD MAPPING

| | INITIALS | DATE |
|---|---|---|
| AS BUILT | | / / |
| VALVE MAPS | | / / |
| GIS (MAPPING) | | / / |
| INSPECTOR APPROVED | | / / |

PULTE CAJA DEL ORO - PHASE 2
SANTA FE, NEW MEXICO

RECORDING INFORMATION
BOOK:
PAGE:
FILE DATE:
INSTRUMENT NO:

APPROVED
CITY OF SANTA FE WATER DIVISION DATE
SANTA FE FIRE DEPARTMENT DATE

INSPECTOR
DATE: _____

| AERIAL | TOWNSHIP, RANGE, SECTION | WORK ORDER NO. |
|---|---|---|
| K - 14<br>J - 14 | T17N, R9E, S31 | - |

2024

10
C-130

COVER - WATERLINES

P:\04197 Pulte\04197.006 Pulte Caja del Oro\3. DWG\Sheets\Phase IIIC-131 Cover - Waterlines.dwg Thu, 12.12.24 - 1240, LSB Jeremiah.Bell

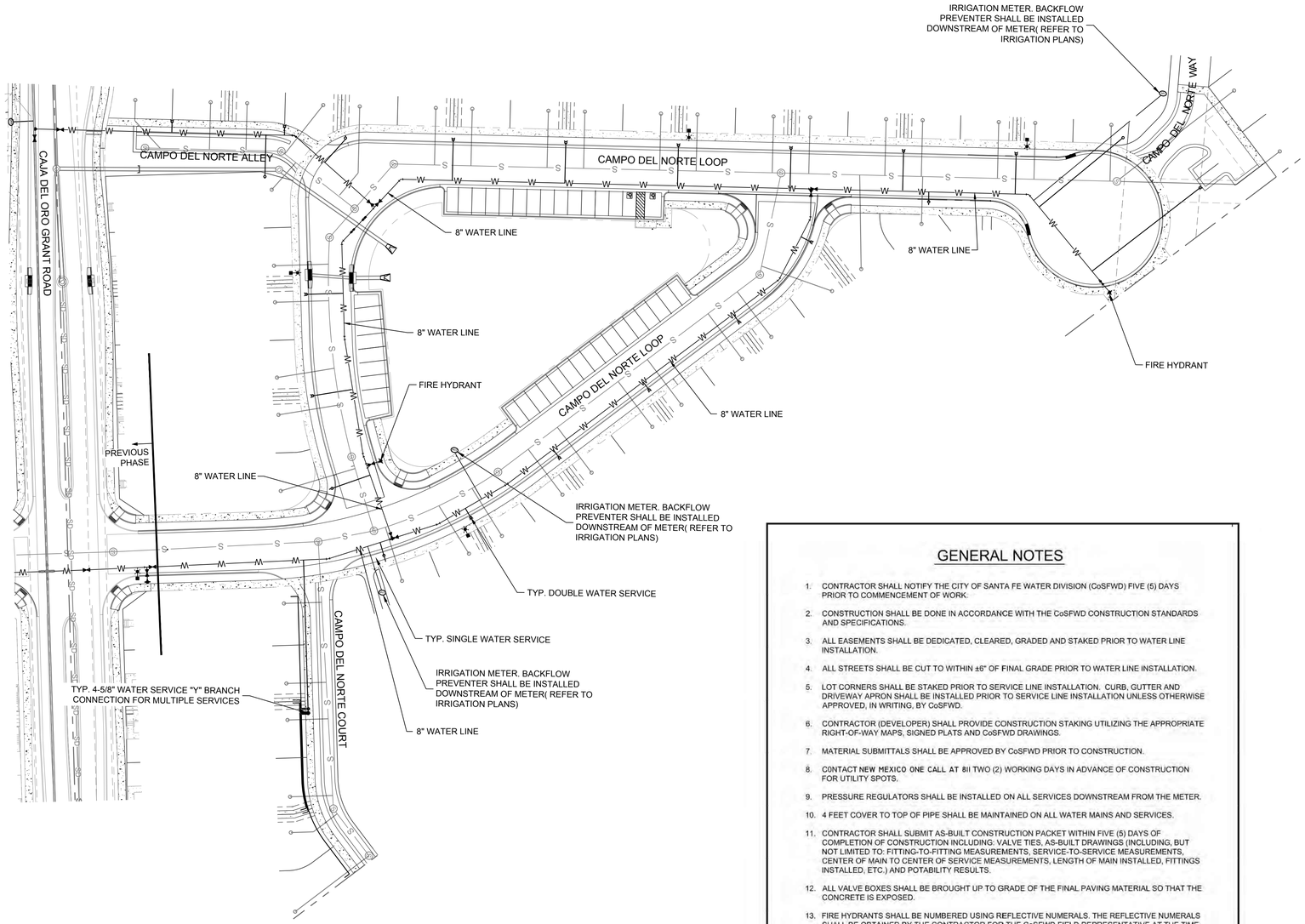


## LEGEND

| | NEW | EXISTING |
|---|---|---|
| WATERLINE | W—W | |
| SANITARY SEWER LINE | S | SAS SAS |
| STORM DRAIN LINE | | |
| WATER VALVE | | |
| REDUCER | | |
| FIRE HYDRANT | | |
| SINGLE WATER SERVICE | | |
| DOUBLE WATER SERVICE | | |
| SAS MANHOLE | Ⓢ | Ⓢ |
| STORM DRAIN INLET | | |
| STORM DRAIN MANHOLE | Ⓓ | |
| SANITARY SEWER SERVICE | | |
| LIGHT POLE | | |

## GENERAL NOTES:

1. ALL HYDRANT LEGS SHALL BE VALVED AND HAVE RESTRAINED JOINTS BETWEEN THE MAIN AND THE VALVE PER CoSFW CONSTRUCTION STANDARDS AND SPECIFICATIONS DETAIL 10A AND 10B.
2. ALL UTILITIES SHOULD BE FIELD VERIFIED AND LOCATED BY THE CONTRACTOR PRIOR TO COMMENCEMENT OF CONSTRUCTION.
3. ALL WATER LINE MAIN TO BE C-900 DR-18 PVC.
4. ALL WATERLINE INSTALLATION SHALL INCORPORATE THRUST RESTRAINTS CONFORMING TO CoSFW CONSTRUCTION STANDARDS AND DETAILS 10A AND 10B
5. WATER METERS AND FIRE HYDRANTS SHALL HAVE 5' OF UNOBSTRUCTED CLEARANCE ON ALL SIDES.
6. MINIMUM HORIZONTAL SEPARATION OF SERVICE TAPS SHALL BE 5'.
7. MINIMUM HORIZONTAL SEPARATION BETWEEN WATER MAIN AND SEWER SERVICES SHALL BE 18".

## GENERAL NOTES

1. CONTRACTOR SHALL NOTIFY THE CITY OF SANTA FE WATER DIVISION (CoSFWD) FIVE (5) DAYS PRIOR TO COMMENCEMENT OF WORK.
2. CONSTRUCTION SHALL BE DONE IN ACCORDANCE WITH THE CoSFWD CONSTRUCTION STANDARDS AND SPECIFICATIONS.
3. ALL EASEMENTS SHALL BE DEDICATED, CLEARED, GRADED AND STAKED PRIOR TO WATER LINE INSTALLATION.
4. ALL STREETS SHALL BE CUT TO WITHIN ±6" OF FINAL GRADE PRIOR TO WATER LINE INSTALLATION.
5. LOT CORNERS SHALL BE STAKED PRIOR TO SERVICE LINE INSTALLATION. CURB, GUTTER AND DRIVEWAY APRON SHALL BE INSTALLED PRIOR TO SERVICE LINE INSTALLATION UNLESS OTHERWISE APPROVED, IN WRITING, BY CoSFWD.
6. CONTRACTOR (DEVELOPER) SHALL PROVIDE CONSTRUCTION STAKING UTILIZING THE APPROPRIATE RIGHT-OF-WAY MAPS, SIGNED PLATS AND CoSFWD DRAWINGS.
7. MATERIAL SUBMITTALS SHALL BE APPROVED BY CoSFWD PRIOR TO CONSTRUCTION.
8. CONTACT NEW MEXICO ONE CALL AT 811 TWO (2) WORKING DAYS IN ADVANCE OF CONSTRUCTION FOR UTILITY SPOTS.
9. PRESSURE REGULATORS SHALL BE INSTALLED ON ALL SERVICES DOWNSTREAM FROM THE METER.
10. 4 FEET COVER TO TOP OF PIPE SHALL BE MAINTAINED ON ALL WATER MAINS AND SERVICES.
11. CONTRACTOR SHALL SUBMIT AS-BUILT CONSTRUCTION PACKET WITHIN FIVE (5) DAYS OF COMPLETION OF CONSTRUCTION INCLUDING: VALVE TIES, AS-BUILT DRAWINGS (INCLUDING, BUT NOT LIMITED TO: FITTING-TO-FITTING MEASUREMENTS, SERVICE-TO-SERVICE MEASUREMENTS, CENTER OF MAIN TO CENTER OF SERVICE MEASUREMENTS, LENGTH OF MAIN INSTALLED, FITTINGS INSTALLED, ETC.) AND POTABILITY RESULTS.
12. ALL VALVE BOXES SHALL BE BROUGHT UP TO GRADE OF THE FINAL PAVING MATERIAL SO THAT THE CONCRETE IS EXPOSED.
13. FIRE HYDRANTS SHALL BE NUMBERED USING REFLECTIVE NUMERALS. THE REFLECTIVE NUMERALS SHALL BE OBTAINED BY THE CONTRACTOR FOR THE CoSFWD FIELD REPRESENTATIVE AT THE TIME THE NOTICE TO PROCEED (NTP) IS ISSUED. NUMBERS SHALL BE LEGIBLE FROM THE ROAD. PRIOR TO INSTALLING NUMBERS, FIRE HYDRANTS SHALL BE PAINTED.
14. A MECHANICAL RESTRAINT SYSTEM SHALL BE UTILIZED ON FITTINGS AND PIPING FOR THRUST RESTRAINT. CONCRETE THRUST BLOCKING SHALL BE USED ONLY FOR SPECIAL CONDITIONS (E.G. CAPS WHERE MAIN WILL BE EXTENDED IN THE FUTURE) AS SPECIFICALLY APPROVED BY CoSFWD.
15. ANY FIELD CHANGES TO THESE PLANS REQUIRE APPROVAL OF BOTH THE DESIGN ENGINEER AND CoSFWD.
16. WORK ON CoSFWD FACILITIES SHALL NOT BEGIN UNTIL CoSFWD HAS ISSUED A NTP TO THE APPROVED UTILITY CONTRACTOR.
17. ANY AND ALL EASEMENTS FOR CITY-OWNED INFRASTRUCTURE SHALL BE OBTAINED/VERIFIED AND RECORDED BY DEVELOPER BEFORE PROJECT COMMENCEMENT. CONTRACTOR SHALL VERIFY THE EASEMENT IS IN PLACE BEFORE INSTALLING ANY INFRASTRUCTURE..

CITY OF SANTA FE WATER DIVISION
SANTA FE, NEW MEXICO
STANDARD DETAILS

GENERAL NOTES

DRAWN BY: | DATE: 08/2008
CHECKED: | SCALE:
APPROVED: | 01



0 40 80
SCALE: 1" = 40'

PULTE CAJA DEL ORO - PHASE 2
SANTA FE, NEW MEXICO

SHELDON E. GREER
NEW MEXICO
17154
LICENSED PROFESSIONAL ENGINEER
12/6/2024

RESPEC
COMMUNITY DESIGN SOLUTIONS
7770 JEFFERSON STREET SUITE 200
ALBUQUERQUE, NEW MEXICO 87109
WWW.RESPEC.COM PHONE: (505) 253-9718

PULTE CAJA DEL ORO - PHASE 2
SANTA FE, NEW MEXICO

| RECORDING INFORMATION | APPROVED | | INSPECTOR |
|---|---|---|---|
| | CITY OF SANTA FE WATER DIVISION DATE | | DATE: |
| BOOK: | SANTA FE FIRE DEPARTMENT DATE | | 2024 |
| PAGE: | AERIAL | TOWNSHIP, RANGE, SECTION | WORK ORDER NO. |
| FILE DATE: | K - 14<br>J - 14 | T17N, R9E, S31 | - |
| INSTRUMENT NO: | | | 10<br>C-131 |

# OVERALL WATER PLAN

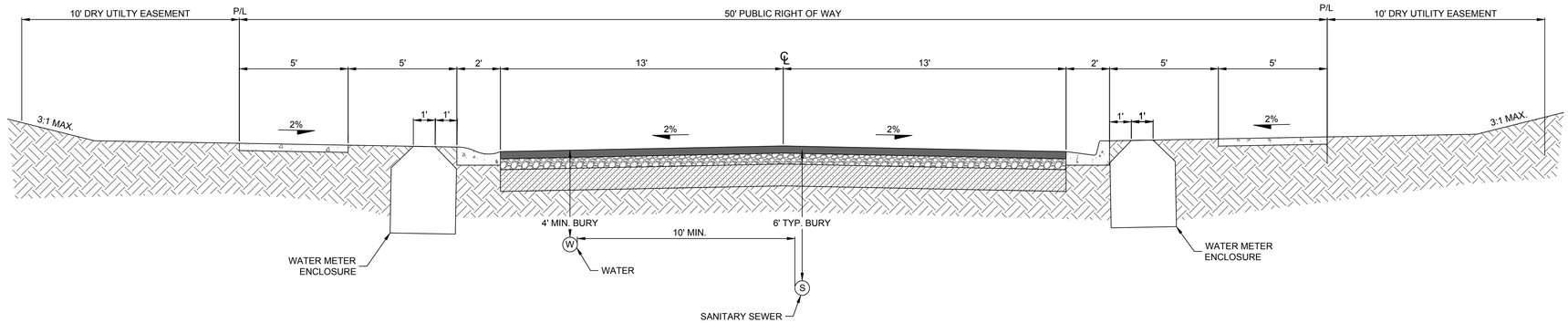


CAMPO DEL NORTE LOOP CROSS SECTION
NOT TO SCALE

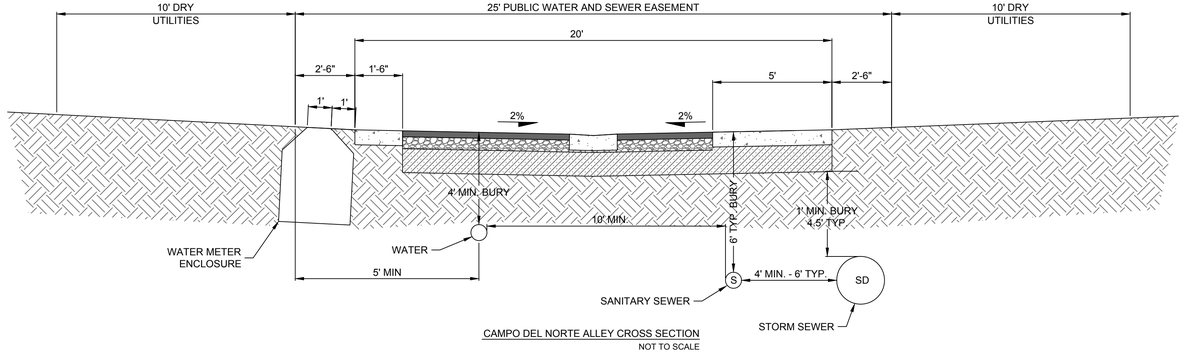


CAMPO DEL NORTE ALLEY CROSS SECTION
NOT TO SCALE

NOTE:
UTILITY LOCATIONS AND DEPTHS ON THE ROAD SECTIONS ARE GENERALLY TYPICAL. SEE UTILITY P&P SHEETS FOR UTILITY BUILD INFORMATION, INCLUDING EXACT UTILITY ALIGNMENT AND DEPTH IN EACH STREET.

PULTE CAJA DEL ORO - PHASE 2
SANTA FE, NEW MEXICO

SHELDON E. GREER
NEW MEXICO
17154
LICENSED PROFESSIONAL ENGINEER
12/6/2024

RESPEC
COMMUNITY DESIGN SOLUTIONS
7770 JEFFERSON STREET SUITE 200
ALBUQUERQUE, NEW MEXICO 87109
WWW.RESPEC.COM PHONE: (505) 253-9718

RESPEC

PULTE CAJA DEL ORO - PHASE 2
SANTA FE, NEW MEXICO

| RECORDING INFORMATION | APPROVED | | INSPECTOR |
|---|---|---|---|
| | CITY OF SANTA FE WATER DIVISION DATE | | DATE: |
| BOOK: | SANTA FE FIRE DEPARTMENT DATE | | 2024 |
| PAGE: | AERIAL | TOWNSHIP, RANGE, SECTION | WORK ORDER NO. |
| FILE DATE: | K - 14<br>J - 14 | T17N, R9E, S31 | - |
| INSTRUMENT NO: | | | 10<br>C-132 |

# ROAD CROSS SECTIONS - WATERLINES

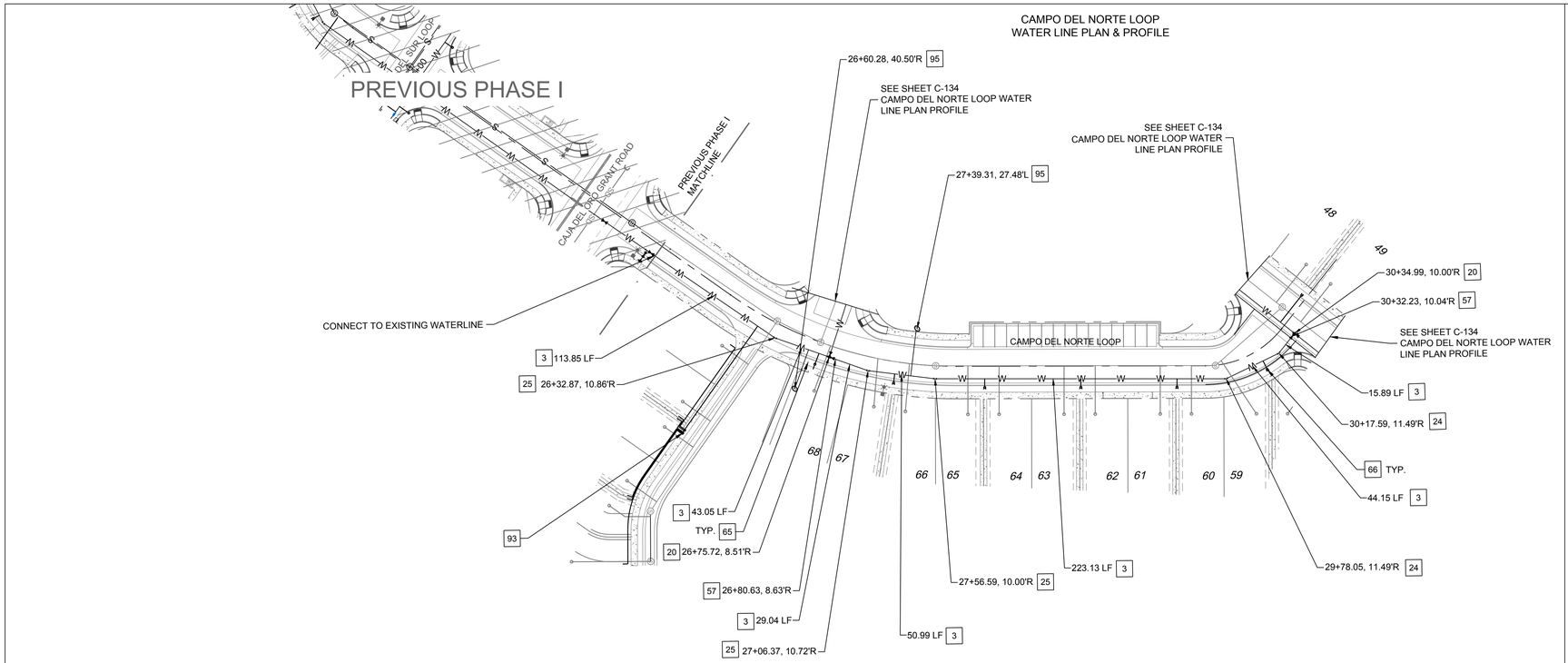


## WATER CONSTRUCTION NOTES

| I.D.# | DESCRIPTION |
|---|---|
| 3 | INSTALL 8" WATERLINE PER APWA STD. SPEC. SEC. 801 |
| 20 | INSTALL 8" TEE |
| 24 | INSTALL 8" 22½° BEND |
| 25 | INSTALL 8" 11¼° BEND |
| 57 | INSTALL 8" GATE VALVE AND VALVE BOX PER CoSFW STD DETAIL 08 |
| 65 | INSTALL ⅝" SINGLE WATER SERVICE PER CoSFW STD DETAIL 02 |
| 66 | INSTALL ⅝" DOUBLE WATER SERVICE PER CoSFW STD DETAIL 06 |
| 93 | INSTALL 2 6-5/8" MULTI-SERVICE Y BRANCH METER PER CITY OF SANTA FE DETAIL. PER CoSFW STD DETAIL 28 |
| 95 | INSTALL 1" SINGLE SERVICE PER CoSFW STD DETAIL 03 FOR IRRIGATION |

PULTE CAJA DEL ORO - PHASE 2
SANTA FE, NEW MEXICO

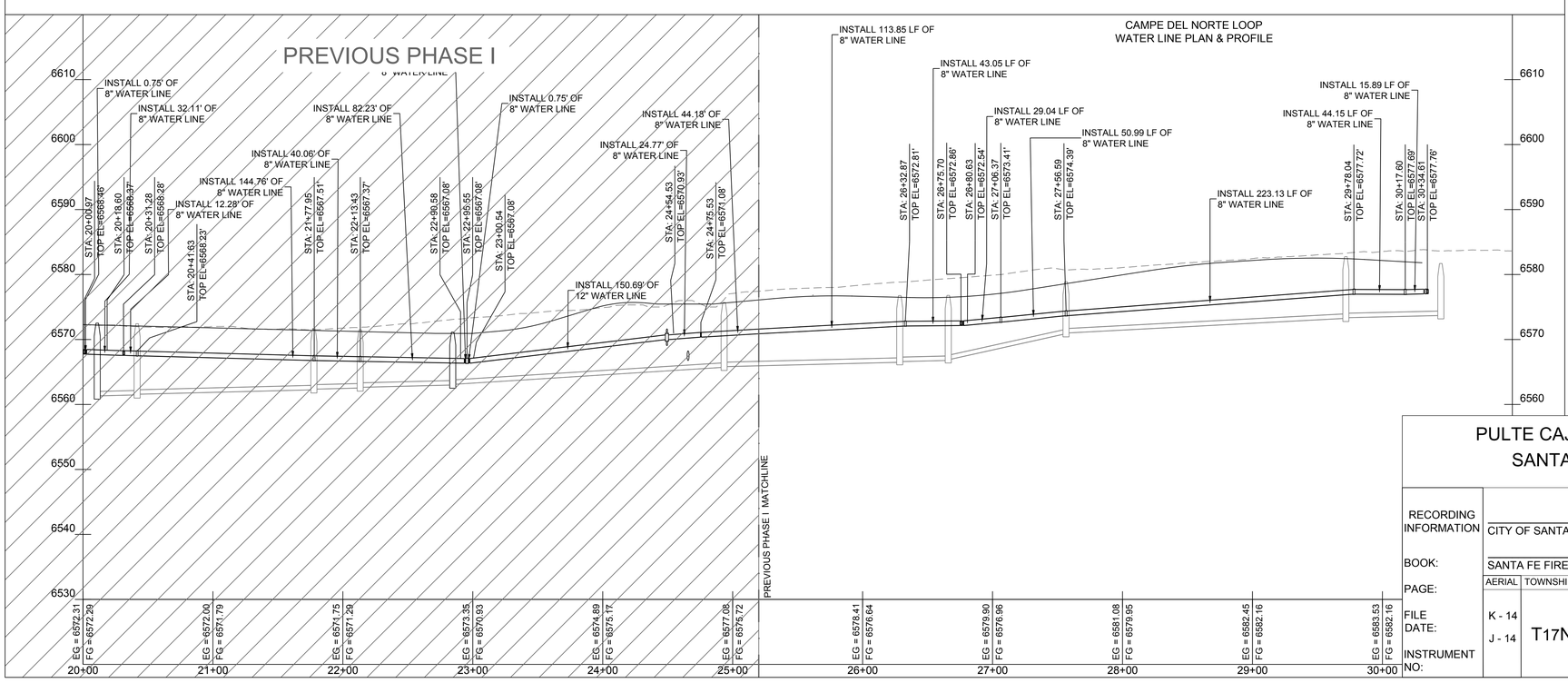


## LEGEND

- WATERLINE — W
- SANITARY SEWER LINE — S
- WATER VALVE — ⋈
- FIRE HYDRANT
- SINGLE WATER SERVICE
- DOUBLE WATER SERVICE
- SAS MANHOLE — Ⓢ
- SANITARY SEWER SERVICE

SCALE:
HORIZONTAL: 1" = 50'
VERTICAL: 1" = 10'

PULTE CAJA DEL ORO - PHASE 2
SANTA FE, NEW MEXICO

| RECORDING INFORMATION | APPROVED | | INSPECTOR |
|---|---|---|---|
| | CITY OF SANTA FE WATER DIVISION — DATE | | DATE: |
| BOOK: | SANTA FE FIRE DEPARTMENT — DATE | | 2024 |
| PAGE: | AERIAL | TOWNSHIP, RANGE, SECTION | WORK ORDER NO. |
| FILE | K - 14 | T17N, R9E, S31 | - |
| DATE: | J - 14 | | 10 |
| INSTRUMENT NO: | | | C-133 |

SHELDON E. GREER
NEW MEXICO
17154
LICENSED PROFESSIONAL ENGINEER
12/6/2024

RESPEC
COMMUNITY DESIGN SOLUTIONS
7770 JEFFERSON STREET SUITE 200
ALBUQUERQUE, NEW MEXICO 87109
WWW.RESPEC.COM PHONE: (505) 253-9718

# CAMPO DEL NORTE LOOP WATERLINE P&P 1

# CAMPO DEL NORTE LOOP
# WATER LINE PLAN & PROFILE

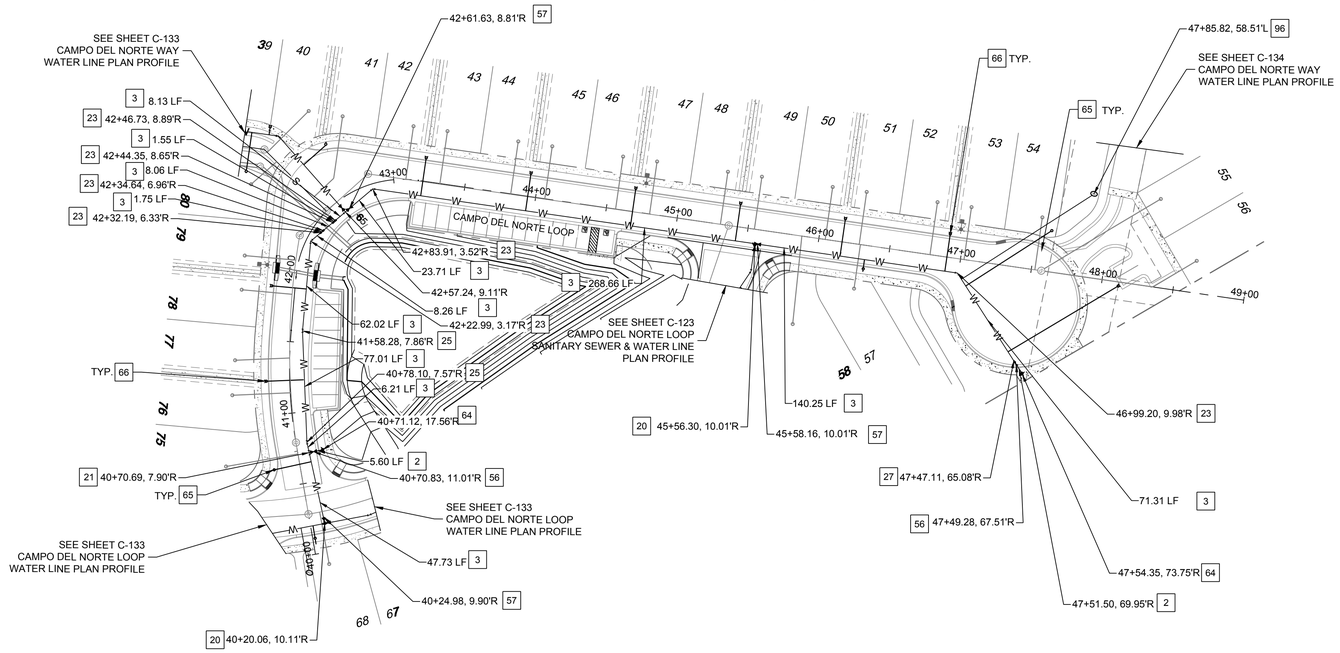


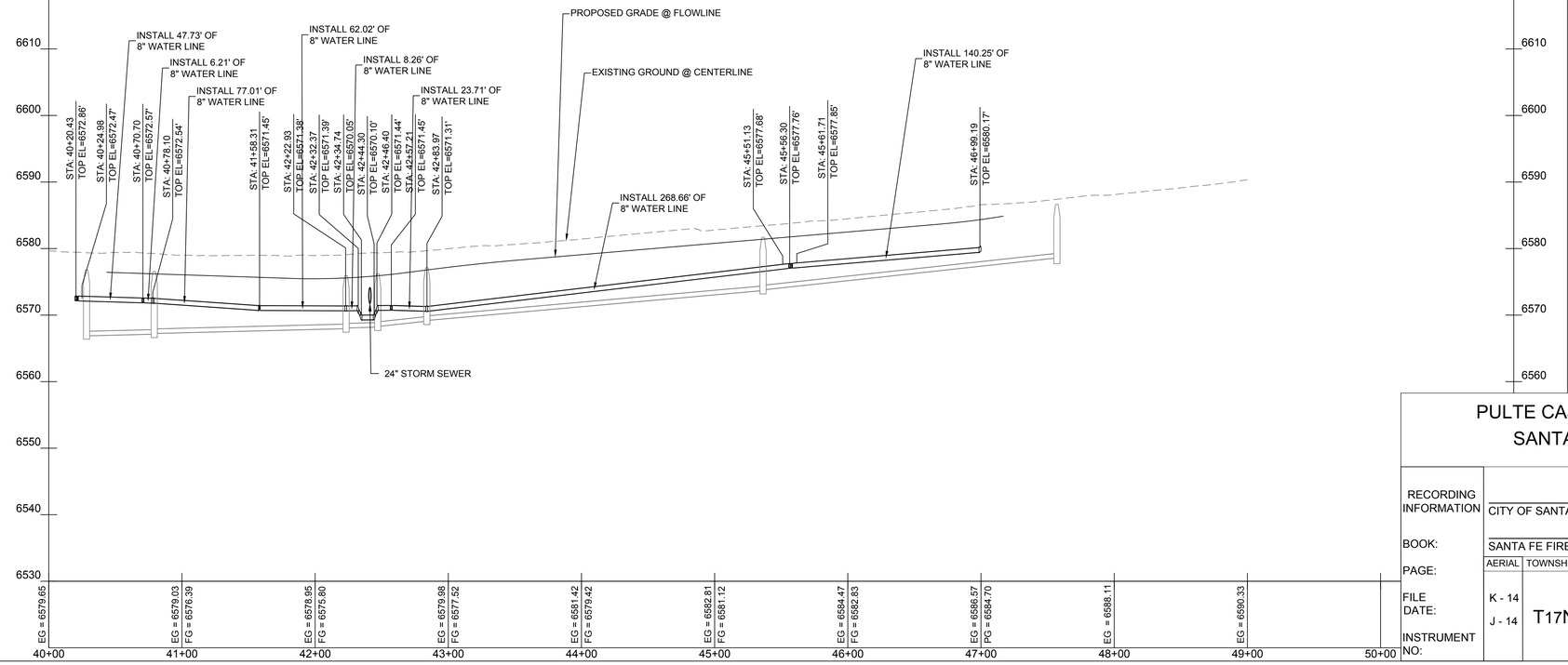


## WATER CONSTRUCTION NOTES

| I.D.# | DESCRIPTION |
|---|---|
| 2 | INSTALL 6" WATERLINE PER APWA STD. SPEC. SEC. 801 |
| 3 | INSTALL 8" WATERLINE PER APWA STD. SPEC. SEC. 801 |
| 19 | INSTALL 8" CROSS |
| 20 | INSTALL 8" TEE |
| 21 | INSTALL 8" x 6" TEE |
| 23 | INSTALL 8" 45° BEND |
| 24 | INSTALL 8" 22½° BEND |
| 25 | INSTALL 8" 11¼° BEND |
| 27 | INSTALL 8" X 6" REDUCER |
| 56 | INSTALL 6" GATE VALVE AND VALVE BOX PER CoSFW STD DETAIL 08 |
| 57 | INSTALL 8" GATE VALVE AND VALVE BOX PER CoSFW STD DETAIL 08 |
| 64 | INSTALL FIRE HYDRANT PER CoSFW STD DETAIL 07 |
| 65 | INSTALL ⅝" SINGLE WATER SERVICE PER CoSFW STD DETAIL 02 |
| 66 | INSTALL ⅝" DOUBLE WATER SERVICE PER CoSFW STD DETAIL 06 |
| 96 | INSTALL 1½ " SINGLE SERVICE PER CoSFW STD DETAIL 04 FOR IRRIGATION |

## LEGEND

- WATERLINE — W
- SANITARY SEWER LINE — S
- WATER VALVE — ⋈
- FIRE HYDRANT
- SINGLE WATER SERVICE
- DOUBLE WATER SERVICE
- SAS MANHOLE — Ⓢ
- SANITARY SEWER SERVICE

SCALE:
HORIZONTAL: 1" = 50'
VERTICAL: 1" = 10'

PULTE CAJA DEL ORO - PHASE 2
SANTA FE, NEW MEXICO

SHELDON E. GREER
NEW MEXICO
17154
LICENSED PROFESSIONAL ENGINEER
12/6/2024


RESPEC
COMMUNITY DESIGN SOLUTIONS
7770 JEFFERSON STREET SUITE 200
ALBUQUERQUE, NEW MEXICO 87109
WWW.RESPEC.COM PHONE: (505) 253-9718


RESPEC

| RECORDING INFORMATION | APPROVED | | INSPECTOR |
|---|---|---|---|
| | CITY OF SANTA FE WATER DIVISION — DATE | | DATE: |
| BOOK: | SANTA FE FIRE DEPARTMENT — DATE | | 2024 |
| PAGE: | AERIAL | TOWNSHIP, RANGE, SECTION | WORK ORDER NO. |
| FILE DATE: | K - 14<br>J - 14 | T17N, R9E, S31 | - |
| INSTRUMENT NO: | | | 10<br>C-134 |

# CAMPO DEL NORTE LOOP WATERLINE P&P 2

CAMPO DEL NORTE ALLEY
WATER LINE PLAN & PROFILE

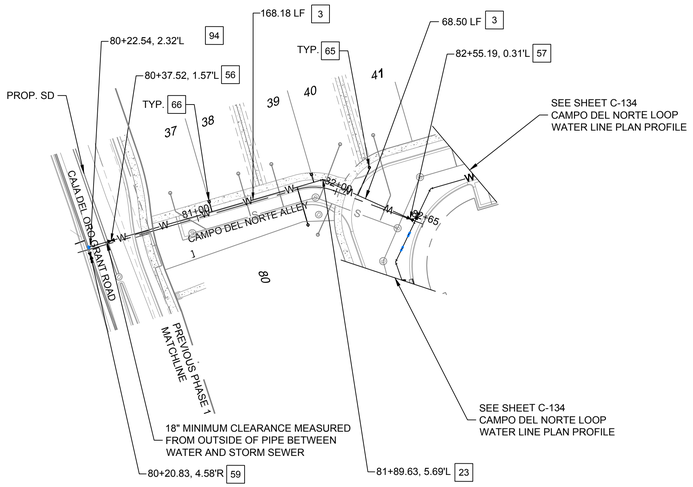


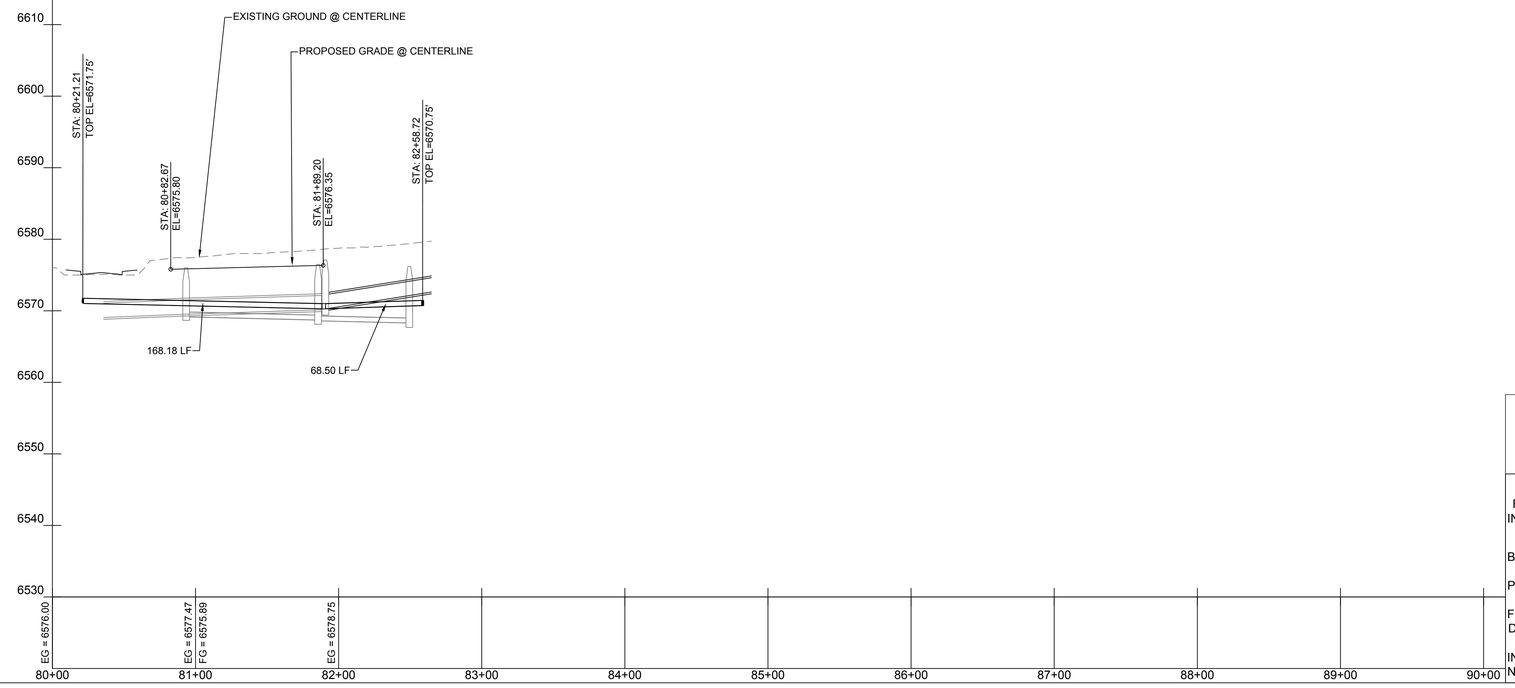


## WATER CONSTRUCTION NOTES

| I.D.# | DESCRIPTION |
|---|---|
| 3 | INSTALL 8" WATERLINE PER APWA STD. SPEC. SEC. 801 |
| 23 | INSTALL 8" 45° BEND |
| 56 | INSTALL 6" GATE VALVE AND VALVE BOX PER CoSFW STD DETAIL 08 |
| 57 | INSTALL 8" GATE VALVE AND VALVE BOX PER CoSFW STD DETAIL 08 |
| 59 | INSTALL 12" GATE VALVE AND VALVE BOX PER C.O.S.F. STD. DETAIL |
| 65 | INSTALL ¾" SINGLE WATER SERVICE PER CoSFW STD DETAIL 02 |
| 66 | INSTALL ¾" DOUBLE WATER SERVICE PER CoSFW STD DETAIL 06 |
| 94 | INSTALL 12" X 6" TEE |

LEGEND

- WATERLINE — W
- SANITARY SEWER LINE — S
- WATER VALVE — W
- FIRE HYDRANT
- SINGLE WATER SERVICE
- DOUBLE WATER SERVICE
- SAS MANHOLE — S
- SANITARY SEWER SERVICE

SCALE:
HORIZONTAL: 1" = 50'
VERTICAL: 1" = 10'

PULTE CAJA DEL ORO - PHASE 2
SANTA FE, NEW MEXICO

SHELDON E. GREER
NEW MEXICO
17154
LICENSED PROFESSIONAL ENGINEER
12/6/2024

RESPEC
COMMUNITY DESIGN SOLUTIONS
7770 JEFFERSON STREET SUITE 200
ALBUQUERQUE, NEW MEXICO 87109
WWW.RESPEC.COM PHONE: (505) 253-9718

RESPEC

PULTE CAJA DEL ORO - PHASE 2
SANTA FE, NEW MEXICO

| RECORDING INFORMATION | APPROVED | | INSPECTOR |
|---|---|---|---|
| | CITY OF SANTA FE WATER DIVISION DATE | | DATE: |
| BOOK: | SANTA FE FIRE DEPARTMENT DATE | | 2024 |
| PAGE: | AERIAL | TOWNSHIP, RANGE, SECTION | WORK ORDER NO. |
| FILE DATE: | K - 14<br>J - 14 | T17N, R9E, S31 | - |
| INSTRUMENT NO: | | | 10<br>C-135 |

# CAMPO DEL NORTE ALLEY WATERLINE P&P

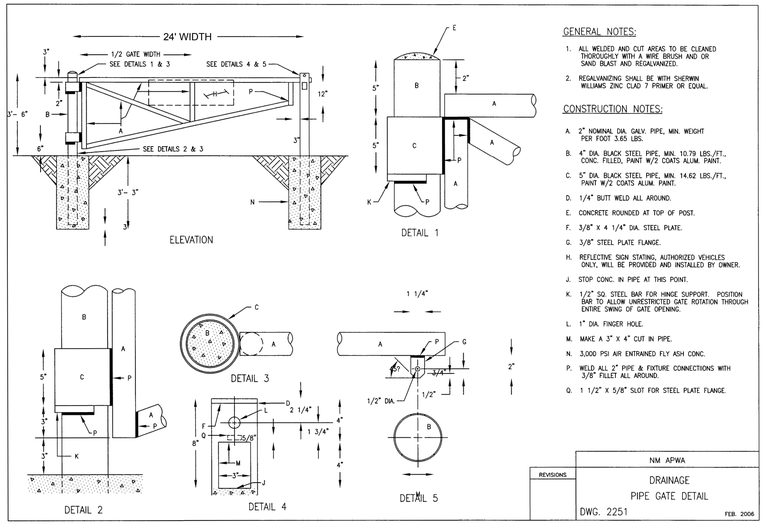


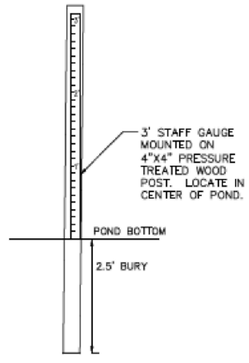


POST AND STAFF GAUGE DETAIL
NOT TO SCALE

DESIGNED SEG
DRAWN SEG
CHECKED JL
DATE 12.12.2024

REVISION

COMMUNITY DESIGN SOLUTIONS
9384 Valley View Drive NW, Suite 100
Albuquerque, NM 87144
505.366.4187

STAMP

SHELDON E. GREER
NEW MEXICO
17154
REGISTERED PROFESSIONAL ENGINEER
12/12/2024

THIS DRAWING IS INCOMPLETE AND NOT TO BE USED FOR CONSTRUCTION UNLESS IT IS STAMPED, SIGNED AND DATED

nm811 Know what's below. Call before you dig.

PROJ. #: 04197.006

PROJECT NAME: PULTE CAJA DEL ORO PHASE 2

SHEET TITLE: UTILITIES & MISCELLANEOUS DETAILS

SUBMITTED FOR: CONSTRUCTION

SHEET NUMBER: C-503

NAME: P:\04197 Pulte\04197.006 Pulte Caja del Oro\3. DWG\Sheets\Phase II\C-509 Cattle Guard Detail.dwg PLOT DATE: Dec 12, 2024 12:42pm

## LEGEND

| ITEM | DESCRIPTION |
|---|---|
| 1 | MANHOLE FRAME & COVER, refer to manhole frame and cover detail Dwg. No. SAS-4 |
| 2 | CONCRETE ADJUSTMENT RINGS or CONCRETE BRICK, refer to concrete adjustment detail Dwg. No. SAS-5 |
| 3 | CONCRETE COLLAR, refer to concrete collar detail Dwg. No. SAS-6 |
| 4 | PRECAST REINFORCED CONCRETE RISER, CONE or FLAT TOP, with 5"(in) wall thickness, refer to general note CM-2 |
| 5 | PRECAST REINFORCED CONCRETE BASE RISER, with suitable sized openings, refer to general note CM-2A |
| 6 | CONCRETE BASE, refer to concrete base detail Dwg. No. SAS-7 |
| 7 | SEWER PIPE, refer to general note CM-1 |
| 8 | 6"(in) GROUT FILLET, on upper half of pipe and around base |
| 9 | ADAPTER, MANHOLE, refer to manhole adapter detail Dwg. No. SAS-8 |
| 10 | PIPE PENETRATION INTO MANHOLE, refer to manhole adapter detail Dwg. No. SAS-8 |
| 11 | PIPE SUPPORT, CONCRETE, shall extend out-side of manhole a maximum of 18"(in) to bell of first joint and shall cradle pipe half pipe |
| 12 | CONCRETE FILL, 3000 p.s.i., refer to general note CR-6 |
| 13 | SHELF, to be 9"(in) minimum width with 1"(in) per 1'-0" slope, from crown of pipe |
| 14 | CUT UPPER HALF OF PIPE, after manhole has been completed and inspected by engineer |
| 15 | HAND FORMED CHANNELS, shall be on a uniform radius and shall not hold water |
| 16 | INVERT ELEVATIONS OF LATERAL LINES, shall be the same as the springline elevation of the sewer main, where possible |
| 17 | CHANGE SLOPE OF PIPE, at center of manhole |
| 18 | APPROVED WATER STOP, to be with type of pipe |

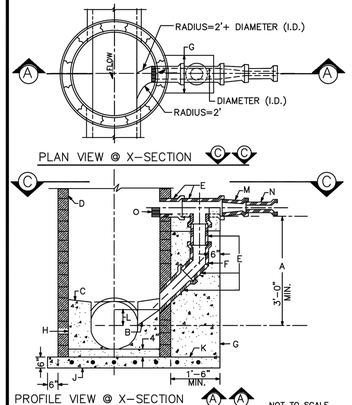


### CONSTRUCTION NOTES

A. 3' (FT) MINIMUM DISTANCE OF VERTICAL DROP. LESS THAN 3'(FT) DISALLOWS DROP MANHOLE.
B. FORM PIPE INVERT IN SHELF. INVERT TO SPRINGLINE.
C. SHELF SLOPE, 1"(IN) PER FT.
D. MANHOLE TYPE FOR UPPER PORTION IS SPECIFIED IN MANHOLE TYPE "E" DETAIL DWG NO. SAS-2.
E. USE D.I. OR P.V.C.(SDR 35) PIPE THROUGHOUT DROP. ALL PIPING IN DROP STRUCTURE FROM THE TEE IS INCREASED ONE PIPE SIZE FROM THE SERVICE LINE. (SERVICE=8" DROP=10")
F. USE BELL AND SPIGOT 45° LONG RADIUS BEND.
G. CONCRETE SUPPORT WIDTH EQUALS PIPE O.D. PLUS 8"(IN) MINIMUM EACH SIDE.
H. CONCRETE FILL.
J. CAST IN PLACE REINFORCED CONCRETE BASE REQUIRED. CONCRETE BASE TO BE POURED IN PLACE USING NO.4 BARS AT 12"(IN) O.C. EACH WAY FOR MANHOLE DEPTH OF 24'(FT) OR LESS. NO.4 BARS AT 12"(IN) O.C. EACH WAY FOR MANHOLE DEPTH LESS THAN 16'(FT) IN DEPTH.
K. FOR NEW DROP ON EXISTING MANHOLE CONSTRUCT 3X3 REINFORCED CONCRETE BASE BEFORE CONSTRUCTING DROP SUPPORT.
L. MINIMUM 2"(IN) ABOVE SPRINGLINE OR AS SHOWN ON PLAN.
M. REDUCER
N. SERVICE LINE
O. EXTEND PIPE 3"(IN) MINIMUM 6"(IN) MAXIMUM INTO MANHOLE TOP. 1/2 PIPE REMOVED.

## DROP MANHOLE DETAIL DWG. #: SAS-1

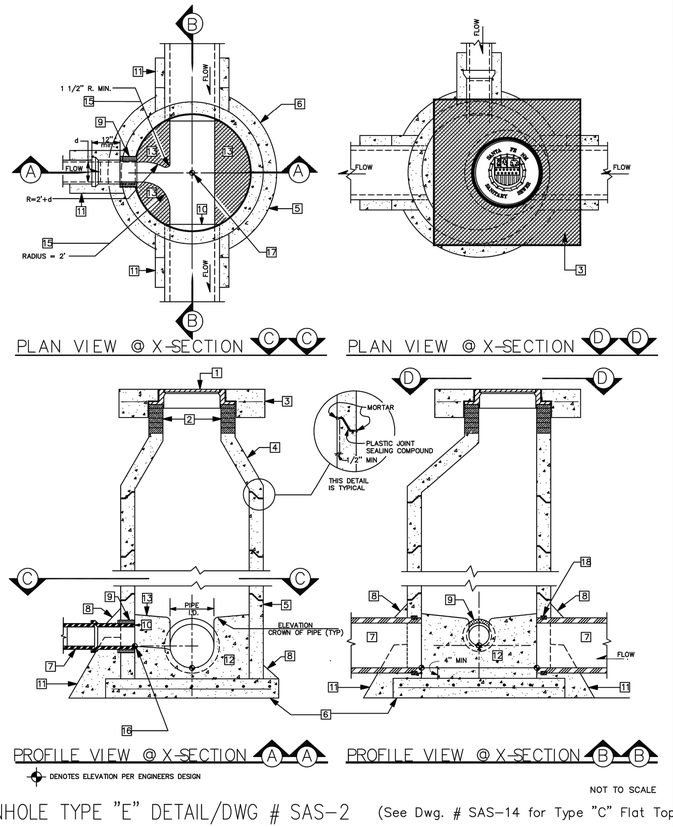


## MANHOLE TYPE "E" DETAIL/DWG # SAS-2 (See Dwg. # SAS-14 for Type "C" Flat Top)

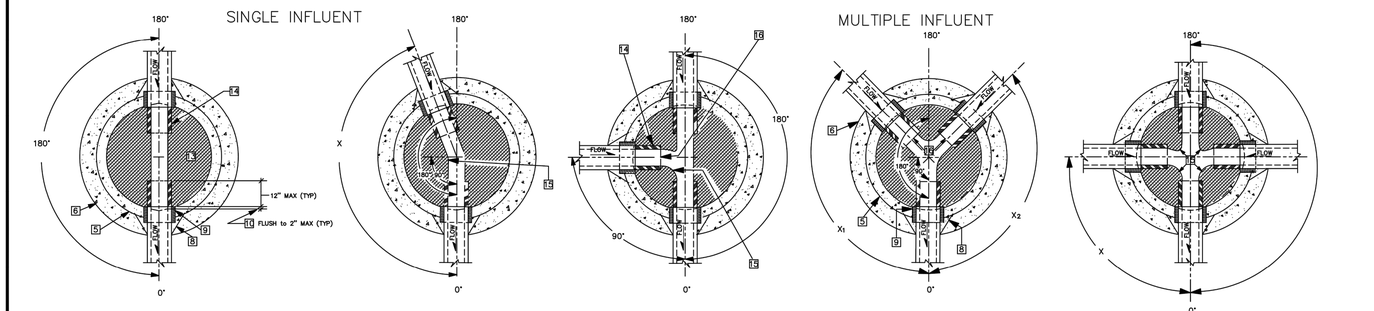


## PLAN VIEW OF MANHOLE BASE CONNECTION/DWG. # SAS-3

## GENERAL NOTES

### CONSTRUCTION REQUIREMENTS

CR-1 MATERIALS AND WORK:
CURRENT NEW MEXICO STANDARD SPECIFICATIONS FOR PUBLIC WORKS CONSTRUCTION (referred to as NM APWA) WITH MODIFICATIONS NOTED BY THE CITY OF SANTA FE.

CR-2 APPROVED PLANS:
USE PLANS BEARING THE OFFICIAL STAMP OF THE DESIGN ENGINEER AND BEARING THE APPROVAL SIGNATURE OF THE CITY WATER QUALITY DIVISION OR APPROVED REPRESENTATIVE. CONSTRUCTION PERFORMED WITHOUT APPROVED PLANS WILL BE REJECTED.

CR-3 SEWER HOOK-UP PERMIT:
OBTAIN PERMITS FOR THE PROJECT BEFORE COMMENCING ANY SEWER CONSTRUCTION. CONSTRUCTION PERFORMED WITHOUT OBTAINING PERMITS SHALL BE REJECTED.
A. CONSTRUCTION PLANS SHALL INDICATE THE CLASS OF BEDDING TO BE USED. CHANGE OF BEDDING MAY REQUIRE A CHANGE IN PIPE CLASSIFICATION OR WALL THICKNESS.

CR-4 SUBSTITUTIONS OR CHANGES:
ALL SUBSTITUTIONS OR CHANGES MUST BE APPROVED BY THE CITY WATER QUALITY DIVISION OR CITY APPROVED REPRESENTATIVE PRIOR TO CONSTRUCTION. ALL SUBSTITUTIONS OR CHANGES MUST BE SUBMITTED BY THE DESIGN ENGINEER TO THE CITY WATER QUALITY DIVISION OR APPROVED REPRESENTATIVE. WHERE APPROPRIATE, SUBMITTAL MUST INCLUDE FABRICATION DRAWINGS, WORKING DRAWINGS AND MATERIAL SPECIFICATIONS OR TEST DATA TO JUSTIFY SUBSTITUTIONS OR CHANGES. DESIGN ENGINEER SHALL AUTHORIZE ANY DRAWINGS FOR SUBSTITUTIONS AND CHANGES AND SUBMIT THEM TO THE CITY WATER QUALITY DIVISION FOR APPROVAL. UNAUTHORIZED SUBMITTALS WILL BE REJECTED.

CR-5 MANUFACTURER'S CERTIFICATES:
WHEN CERTIFICATES OF COMPLIANCE AND TEST REPORTS ARE REQUIRED FOR MATERIALS, DOCUMENTS SHALL BE SUBMITTED TO THE CITY WATER QUALITY DIVISION OR APPROVED REPRESENTATIVE AT THE TIME OF MATERIALS DELIVERY TO THE JOBSITE.

CR-6 CONTRACTOR REQUIREMENTS:
CONTRACTOR PERFORMING WORK ON PUBLIC SEWER LINES SHALL BE A LICENSED UTILITY CONTRACTOR.

### INSTALLATION

I-1 LAYING PIPE:
AS PER SECTION 900, NM APWA; PIPE SHALL BE PLACED AND BEDDED IN A FROST FREE TRENCH; GASKET SHALL BE FULLY SEATED AND NOT SLIPPED; PIPE SHALL BE LAID THROUGH MANHOLE LOCATIONS ON STRAIGHT AND UP TO 22 1/2 DEGREE DEFLECTIONS.
A. IF PIPE TRENCH INSTALLATION CONFIGURATION EXCEEDS THE LIMITS OF NM APWA STANDARDS, SECTION 700, OR AS DEFINED ON THE CONSTRUCTION PLANS, THE DESIGN ENGINEER WILL SPECIFY THE NEW PIPE CLASSIFICATION OR WALL THICKNESS.
B. TYPE I TRENCH CONFIGURATION IS NORMALLY USED WHEN TRENCH DEPTHS ARE 8'(FT.) OR LESS. TYPE II TRENCH CONFIGURATION IS NORMALLY USED WHEN TRENCH DEPTHS ARE 8'(FT.) AND OVER, DEPENDING ON SOIL CONDITIONS. REFER TO NM APWA STANDARDS SECTION 700.

I-2 MANHOLE CONSTRUCTION:
A. BASE:
1. CAST IN PLACE: ON UNDISTURBED FROST FREE SUBGRADE
2. PRECAST UNIT: ON PEA GRAVEL WITH COMPLETE EVEN BEARING
B. PRECAST BARREL:
1. JOINTS: FILL COMPLETELY WITH NON-SHRINK GROUT AND TROWEL
2. MANHOLE ADAPTOR: INSTALL OVER PVC PIPE AND FILL IN PENETRATION WITH NON-SHRINK GROUT.
3. CAST IN PLACE BASES: SHALL ACHIEVE A MINIMUM OF 2500 PSI COMPRESSIVE STRENGTH BEFORE SETTING PRECAST BARREL SECTIONS.

I-3 EXCAVATION AND BACKFILL:
AS PER SECTION 700, NM APWA; SATURATION BY FLOODING OR JETTING METHODS IS NOT PERMITTED WITHOUT A SOILS ENGINEERING REPORT RECOMMENDING THESE METHODS. MECHANICAL OR VIBRATORY COMPACTORS SHALL NOT BE USED ON THE BEDDING AND 12"(IN.) OF INITIAL BACKFILL. COMPACTION SHALL BE DETERMINED PER AASHTO T-180.

### CONSTRUCTION MATERIALS

CM-1 SEWER PIPE: (CERTIFICATES REQUIRED)
A. VITRIFIED CLAY: REFER TO SECTION 125, NM APWA FOR EXTRA STRENGTH VCP.
B. PLASTIC (PVC): REFER TO SECTION 121, NM APWA, AS MODIFIED BY THE CITY.
1. 4" THRU 15" (inch) DIAMETER, ASTM D-3034 OR ASTM F-789 PIPE, MINIMUM PS-46 STRENGTH. SDR-35 OR EQUAL.
2. LARGER THAN 15" (IN.) DIAMETER: ASTM F 679 VOL. 08.04.
C. HDPE PIPE PER ASTM D-1248 CLASS III WHEN APPROVED BY WATER QUALITY DIVISION ENGINEER.
D. PVC RESTRAINED JOINTS: SERIES 1350 OR SERIES 1390 FOR COUPLINGS PRODUCED BY Uni-FLANGE CORPORATION, LOCKING COUPLINGS WITH NYLON SPLINE, MARKETED AS "YELLOWMINE" AND PRODUCED BY CERTAINTEED CORPORATION, OR APPROVED EQUAL.
E. MANHOLE ADAPTERS: ASBESTOS CEMENT (AC) MANHOLE ADAPTERS, OR AC/PVC ADAPTER COUPLINGS.
F. BUILDING SERVICE STUBS: CAST IRON DWV, PVC SCH. 40 DWV.
G. SERVICE CONNECTIONS:
1. VCP PIPE: FACTORY TEE FITTINGS; SECTION 125 NM APWA.
2. PVC PIPE: CAST IRON BODIES TAPPING SADDLE WITH STAINLESS STEEL TENSION STRAP AND FITTINGS; FOWLER "QUICKWAY",GENECO, HERSEY "PIONEER", OR APPROVED EQUAL.
H. SOIL CLASSIFICATION: THE UNIFIED SOIL CLASSIFICATION SYSTEM PER ASTM D 2487 TABLE 701.3.5 NM APWA.

CM-2 MANHOLES:
A. CONCRETE MANHOLES: PRECAST REINFORCED CONCRETE RISERS, REDUCING CONES, AND ADJUSTMENT RINGS PER ASTM C 478 VOL. 04.05. BASES MAY BE FIELD PLACED CONCRETE OR PRECAST CONCRETE PER ASTM C 478 VOL. 04.05 (CERTIFICATES REQUIRED). CRACKED OR VISIBLY DEFECTIVE UNITS WILL BE REJECTED.
B. PIPE PENETRATIONS: PRECAST UNITS SHALL HAVE SUITABLE SIZED OPENINGS CAST INTO BARREL AT PROPER ANGLES FOR PIPE AND MANHOLE ADAPTERS.
C. MANHOLE STEPS: REFER TO SECTION 820.4.7 NM APWA POLYPROPYLENE ENCASED GRADE 60 STEEL BY M.A. INC. OR APPROVED EQUAL; 14"(IN.) WIDE, 16"(IN.) MAXIMUM SPACING.
D. FRAMES AND COVERS:
1. CASTING: SHALL CONFORM TO SECTION 160, 161 & 162, NM APWA CLASS 30B. (CERTIFICATES AND SHOP DRAWINGS REQUIRED)
2. MINIMUM COVER WEIGHT: 165 POUNDS
3. MINIMUM COMBINED WEIGHT: 365 POUNDS +/- 5%
4. BEARING SURFACES: SHALL BE MATCHED FOR A FIRM NON ROCKING SEAT BETWEEN FRAME AND COVER. MINIMUM SEATING WIDTH: 7/8"(IN.)
5. COATING: NONE
6. COVER LETTERINGS: SANTA FE, N.M. SANITARY SEWER
7. CASTINGS: CAST MANUFACTURER AND MODEL NUMBER ON FRAME AND COVER.
8. CASTINGS TOLERANCE: +/- 1/16"(IN.) PER FOOT OF OVERALL DIMENSION. OUT OF ROUND CASTINGS AND LOOSE FITTING UNITS WILL BE REJECTED IN THE FIELD.

CM-3 CONCRETE ENCASEMENT:
A. REQUIREMENTS:
1. WHEN THE PIPE COVER IS 36" (IN.) OR LESS.
2. WHEN VITRIFIED CLAY CROSSES AN ARROYO.
3. WHEN A WATER LINE PASSES BELOW OR LESS THAN 18" (IN.) ABOVE THE EXISTING SEWER LINE.
4. WHEN A PARALLEL WATER LINE IS LESS THAN 10'(FT.) HORIZONTALLY AND LESS THAN 2'(FT.) ABOVE THE SEWER LINE.
5. THE SEWER LINE SHALL BE ENCASED IN CONCRETE 6"(IN.) THICK AS DETAILED, AND EXTEND AT LEAST 10'(FT.) ON EACH SIDE OF THE WATER LINE.

### FIELD QUALITY CONTROL

FQC-1 TESTING AND INSPECTION:
A. SUPERVISION: CONDUCTED BY DESIGN ENGINEER.
B. CERTIFICATION: DESIGN ENGINEER SHALL CERTIFY THAT THE PROJECT HAS BEEN COMPLETED IN ACCORDANCE TO PLANS & SPECIFICATIONS AND SHALL SUBMIT A CERTIFICATION OF COMPLIANCE STATEMENT WITH STAMP AND SIGNATURE.
C. EQUIPMENT AND ASSISTANCE: PROVIDED BY CONTRACTOR.

FQC-2 LINE AND GRADE: ALLOWABLE TOLERANCE BETWEEN STRUCTURES FROM DESIGN:
A. LINE: 0.20 FOOT
B. GRADE: 0.02 FOOT; PIPE SHALL NOT HOLD BACK ANY WATER.

FQC-3 LEAKAGE TEST:
AIR TEST REQUIRED; REFER TO SECTION 901.7 NM APWA.

FQC-4 TELEVISION INSPECTION:
CONTRACTOR SHALL PROVIDE A CERTIFIED CCTV SEWERLINE INSPECTION AND RECORD TAPES AT HIS OWN EXPENSE.

FQC-5 ALL CONNECTIONS TO EXISTING MANHOLES INCLUDES REHABILITATING THE TIE IN MANHOLE TO MEET THESE STANDARD CONSTRUCTION DETAILS.

NOTE: REVISIONS TO THIS SHEET SHALL BE MADE UNDER THE AUTHORITY OF THE CITY OF SANTA FE ONLY.

CITY OF SANTA FE
WATER QUALITY DIVISION

TITLE: SANITARY SEWER
STANDARD CONSTRUCTION DETAILS

| DATE: JULY 1992 | REVISIONS | | FILE #: E:\AUTO\DWG\SCDT1-4 |
|---|---|---|---|
| DRAWN BY: G. CHAVEZ | 1 8-3-92 | 3 | |
| CADD RENDITION BY: G. CHAVEZ | 2 12-14-92 | 4 | SHEET OF |
| APPROVED BY: E. BROWN | 3 11-16-94 | 5 | |

DESIGNED SEG
DRAWN SEG
CHECKED JL
DATE 12.12.2024

REVISION


COMMUNITY DESIGN SOLUTIONS
9384 Valley View Drive NW, Suite 100
Albuquerque, NM 87144
505.366.4187


STAMP
SHELDON E. GREER
NEW MEXICO
17154
REGISTERED PROFESSIONAL ENGINEER
10/08/2025

THIS DRAWING IS INCOMPLETE AND NOT TO BE USED FOR CONSTRUCTION UNLESS IT IS STAMPED, SIGNED AND DATED

nm811 Know what's below. Call before you dig.

PROJ. #: 04197.006

PROJECT NAME: PULTE CAJA DEL ORO PHASE 2

SHEET TITLE: SEWER DETAILS

SUBMITTED FOR: CONSTRUCTION

SHEET NUMBER: C-503

NAME: P:\04197 Pulte\04197.006 Pulte Caja del Oro\3. DWG\Sheets\Phase II\C-509 Cattle Guard Detail.dwg PLOT DATE: Dec 12, 2024 12:42pm

# LEGEND

| ITEM | DESCRIPTION |
|---|---|
| 1 | MANHOLE FRAME & COVER, refer to manhole frame and cover detail Dwg. No. SAS-4 |
| 2 | CONCRETE ADJUSTMENT RINGS or CONCRETE BRICK, refer to concrete adjustment detail Dwg. No. SAS-5 |
| 3 | CONCRETE COLLAR, refer to concrete collar detail Dwg. No. SAS-6 |
| 4 | PRECAST REINFORCED CONCRETE RISER, CONE or FLAT TOP, with 5"(in) wall thickness, refer to general note CM-2 |
| 5 | PRECAST REINFORCED CONCRETE BASE RISER, with suitable sized openings, refer to general note CM-2A |
| 6 | CONCRETE BASE, refer to concrete base detail Dwg. No. SAS-7 |
| 7 | SEWER PIPE, refer to general note CM-1 |
| 8 | 6"(in) GROUT FILLET, on upper half of pipe and around base |
| 9 | ADAPTER, MANHOLE, refer to manhole adapter detail Dwg. No. SAS-8 |
| 10 | PIPE PENETRATION INTO MANHOLE, refer to manhole adapter detail Dwg. No. SAS-8 |
| 11 | PIPE SUPPORT, CONCRETE, shall extend out-side of manhole a maximum of 18"(in) to bell of first joint and shall cradle pipe half pipe |
| 12 | CONCRETE FILL, 3000 p.s.i., refer to general note CR-6 |
| 13 | SHELF, to be 9"(in) minimum width with 1"(in) per 1'-0" slope, from crown of pipe |
| 14 | CUT UPPER HALF OF PIPE, after manhole has been completed and inspected by engineer |
| 15 | HAND FORMED CHANNELS, shall be on a uniform radius and shall not hold water |
| 16 | INVERT ELEVATIONS OF LATERAL LINES, shall be the same as the springline elevation of the sewer main, where possible |
| 17 | CHANGE SLOPE OF PIPE, at center of manhole |
| 18 | APPROVED WATER STOP, to be with type of pipe |

NOT TO SCALE

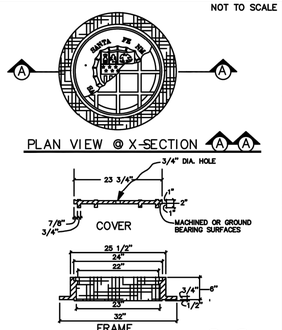


MANHOLE FRAME & COVER DETAIL/DWG # SAS-4

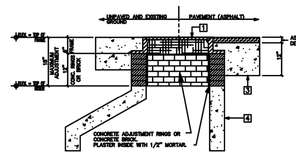


NOT TO SCALE

MANHOLE ADJUSTMENT DETAIL/DWG # SAS-5

# GENERAL NOTES

## CONSTRUCTION REQUIREMENTS

CR-1 MATERIALS AND WORK:
CURRENT NEW MEXICO STANDARD SPECIFICATIONS FOR PUBLIC WORKS CONSTRUCTION (referred to as NM APWA) WITH MODIFICATIONS NOTED BY THE CITY OF SANTA FE.

CR-2 APPROVED PLANS:
USE PLANS BEARING THE OFFICIAL STAMP OF THE DESIGN ENGINEER AND BEARING THE APPROVAL SIGNATURE OF THE CITY WATER QUALITY DIVISION OR APPROVED REPRESENTATIVE. CONSTRUCTION PERFORMED WITHOUT APPROVED PLANS WILL BE REJECTED.

CR-3 SEWER HOOK-UP PERMIT:
OBTAIN PERMITS FOR THE PROJECT BEFORE COMMENCING ANY SEWER CONSTRUCTION. CONSTRUCTION PERFORMED WITHOUT OBTAINING PERMITS SHALL BE REJECTED.
A. CONSTRUCTION PLANS SHALL INDICATE THE CLASS OF BEDDING TO BE USED. CHANGE OF BEDDING MAY REQUIRE A CHANGE IN PIPE CLASSIFICATION OR WALL THICKNESS.

CR-4 SUBSTITUTIONS OR CHANGES:
ALL SUBSTITUTIONS OR CHANGES MUST BE APPROVED BY THE CITY WATER QUALITY DIVISION OR CITY APPROVED REPRESENTATIVE PRIOR TO CONSTRUCTION. ALL SUBSTITUTIONS OR CHANGES MUST BE SUBMITTED BY THE DESIGN ENGINEER TO THE CITY WATER QUALITY DIVISION OR APPROVED REPRESENTATIVE. WHERE APPROPRIATE, SUBMITTAL MUST INCLUDE FABRICATION DRAWINGS, WORKING DRAWINGS AND MATERIAL SPECIFICATIONS OR TEST DATA TO JUSTIFY SUBSTITUTIONS OR CHANGES. DESIGN ENGINEER SHALL AUTHORIZE ANY DRAWINGS FOR SUBSTITUTIONS AND CHANGES AND SUBMIT THEM TO THE CITY WATER QUALITY DIVISION FOR APPROVAL. UNAUTHORIZED SUBMITTALS WILL BE REJECTED.

CR-5 MANUFACTURER'S CERTIFICATES:
WHEN CERTIFICATES OF COMPLIANCE AND TEST REPORTS ARE REQUIRED FOR MATERIALS, DOCUMENTS SHALL BE SUBMITTED TO THE CITY WATER QUALITY DIVISION OR APPROVED REPRESENTATIVE AT THE TIME OF MATERIALS DELIVERY TO THE JOBSITE.

CR-6 CONTRACTOR REQUIREMENTS:
CONTRACTOR PERFORMING WORK ON PUBLIC SEWER LINES SHALL BE A LICENSED UTILITY CONTRACTOR.

## INSTALLATION

I-1 LAYING PIPE:
AS PER SECTION 900, NM APWA; PIPE SHALL BE PLACED AND BEDDED IN A FROST FREE TRENCH; GASKET SHALL BE FULLY SEATED AND NOT SLIPPED; PIPE SHALL BE LAID THROUGH MANHOLE LOCATIONS ON STRAIGHT AND UP TO 22 1/2 DEGREE DEFLECTIONS.
A. IF PIPE TRENCH INSTALLATION CONFIGURATION EXCEEDS THE LIMITS OF NM APWA STANDARDS, SECTION 700, OR AS DEFINED ON THE CONSTRUCTION PLANS, THE DESIGN ENGINEER WILL SPECIFY THE NEW PIPE CLASSIFICATION OR WALL THICKNESS.
B. TYPE I TRENCH CONFIGURATION IS NORMALLY USED WHEN TRENCH DEPTHS ARE 8'(FT.) OR LESS. TYPE II TRENCH CONFIGURATION IS NORMALLY USED WHEN TRENCH DEPTHS ARE 8'(FT.) AND OVER, DEPENDING ON SOIL CONDITIONS. REFER TO NM APWA STANDARDS SECTION 700.

I-2 MANHOLE CONSTRUCTION:
A. BASE:
1. CAST IN PLACE: ON UNDISTURBED FROST FREE SUBGRADE
2. PRECAST UNIT: ON PEA GRAVEL WITH COMPLETE EVEN BEARING
B. PRECAST BARREL:
1. JOINTS: FILL COMPLETELY WITH NON-SHRINK GROUT AND TROWEL.
2. MANHOLE ADAPTOR: INSTALL OVER PVC PIPE AND FILL IN PENETRATION WITH NON-SHRINK GROUT.
3. CAST IN PLACE BASES: SHALL ACHIEVE A MINIMUM OF 2500 PSI COMPRESSIVE STRENGTH BEFORE SETTING PRECAST BARREL SECTIONS.

I-3 EXCAVATION AND BACKFILL:
AS PER SECTION 700, NM APWA; SATURATION BY FLOODING OR JETTING METHODS IS NOT PERMITTED WITHOUT A SOILS ENGINEERING REPORT RECOMMENDING THESE METHODS. MECHANICAL OR VIBRATORY COMPACTORS SHALL NOT BE USED ON THE BEDDING AND 12"(IN.) OF INITIAL BACKFILL. COMPACTION SHALL BE DETERMINED PER AASHTO T-180.

## CONSTRUCTION MATERIALS

CM-1 SEWER PIPE: (CERTIFICATES REQUIRED)
A. VITRIFIED CLAY: REFER TO SECTION 125, NM APWA FOR EXTRA STRENGTH VCP.
B. PLASTIC (PVC): REFER TO SECTION 121, NM APWA, AS MODIFIED BY THE CITY.
1. 4" THRU 15" (inch) DIAMETER, ASTM D-3034 OR ASTM F-789 PIPE, MINIMUM PS-46 STRENGTH. SDR-35 OR EQUAL.
2. LARGER THAN 15" (IN.) DIAMETER: ASTM F 679 VOL. 08.04.
C. HDPE PIPE PER ASTM D-1248 CLASS III WHEN APPROVED BY WATER QUALITY DIVISION ENGINEER.
D. PVC RESTRAINED JOINTS: SERIES 1350 OR SERIES 1390 FOR COUPLINGS PRODUCED BY UNI-FLANGE CORPORATION, LOCKING COUPLINGS WITH NYLON SPLINE, MARKETED AS "YELLOWMINE" AND PRODUCED BY CERTAINTEED CORPORATION, OR APPROVED EQUAL.
E. MANHOLE ADAPTERS: ASBESTOS CEMENT (AC) MANHOLE ADAPTERS, OR AC/PVC ADAPTER COUPLINGS.
F. BUILDING SERVICE STUBS: CAST IRON DWV, PVC SCH. 40 DWV.
G. SERVICE CONNECTIONS:
1. VCP PIPE: FACTORY TEE FITTINGS; SECTION 125 NM APWA.
2. PVC PIPE: CAST IRON BODIES TAPPING SADDLE WITH STAINLESS STEEL TENSION STRAP AND FITTINGS: FOWLER "QUICKWAY" GENECO, HERSEY "PIONEER", OR APPROVED EQUAL.
H. SOIL CLASSIFICATION: THE UNIFIED SOIL CLASSIFICATION SYSTEM PER ASTM D 2487 TABLE 701.3.5 NM APWA.

CM-2 MANHOLES:
A. CONCRETE MANHOLES: PRECAST REINFORCED CONCRETE RISERS, REDUCING CONES, AND ADJUSTMENT RINGS PER ASTM C 478 VOL. 04.05. BASES MAY BE FIELD PLACED CONCRETE OR PRECAST CONCRETE PER ASTM C 478 VOL. 04.05 (CERTIFICATES REQUIRED). CRACKED OR VISIBLY DEFECTIVE UNITS WILL BE REJECTED.
B. PIPE PENETRATIONS: PRECAST UNITS SHALL HAVE SUITABLE SIZED OPENINGS CAST INTO BARREL AT PROPER ANGLES FOR PIPE TO MANHOLE ADAPTERS.
C. MANHOLE STEPS: REFER TO SECTION 920.4.7 NM APWA POLYPROPYLENE ENCASED GRADE 60 STEEL BY M.A. INC. OR APPROVED EQUAL: 14"(IN.) WIDE 16"(IN.) MAXIMUM SPACING.
D. FRAMES AND COVERS:
1. CASTING: SHALL CONFORM TO SECTION 160, 161 & 162, NM, APWA CLASS 30B. (CERTIFICATES AND SHOP DRAWINGS REQUIRED)
2. MINIMUM COVER WEIGHT: 165 POUNDS
3. MINIMUM COMBINED WEIGHT: 365 POUNDS +/- 5%
4. BEARING SURFACES: SHALL BE MATCHED FOR A FIRM NON ROCKING SEAT BETWEEN FRAME AND COVER. MINIMUM SEATING WIDTH: 7/8"(IN.)
5. COATING: NONE
6. COVER LETTERINGS: SANTA FE, N.M. SANITARY SEWER
7. CASTINGS: CAST MANUFACTURER AND MODEL NUMBER ON FRAME AND COVER.
8. CASTINGS TOLERANCE: +/- 1/16"(IN.) PER FOOT OF OVERALL DIMENSION. OUT OF ROUND CASTINGS AND LOOSE FITTING UNITS WILL BE REJECTED IN THE FIELD.

CM-3 CONCRETE ENCASEMENT:
A. REQUIREMENTS:
1. WHEN THE PIPE COVER IS 36" (IN.) OR LESS.
2. WHEN VITRIFIED CLAY CROSSES AN ARROYO.
3. WHEN A WATER LINE PASSES BELOW OR LESS THAN 18" (IN.) ABOVE THE EXISTING SEWER LINE.
4. WHEN A PARALLEL WATER LINE IS LESS THAN 10'(FT.) HORIZONTALLY AND LESS THAN 2'(FT.) ABOVE THE SEWER LINE.
5. THE SEWER LINE SHALL BE ENCASED IN CONCRETE 6"(IN.) THICK AS DETAILED, AND EXTEND AT LEAST 10'(FT.) ON EACH SIDE OF THE WATER LINE.

## FIELD QUALITY CONTROL

FQC-1 TESTING AND INSPECTION:
A. SUPERVISION: CONDUCTED BY DESIGN ENGINEER.
B. CERTIFICATION: DESIGN ENGINEER SHALL CERTIFY THAT THE PROJECT HAS BEEN COMPLETED IN ACCORDANCE TO PLANS & SPECIFICATIONS AND SHALL SUBMIT A CERTIFICATION OF COMPLIANCE STATEMENT WITH STAMP AND SIGNATURE.
C. EQUIPMENT AND ASSISTANCE: PROVIDED BY CONTRACTOR.

FQC-2 LINE AND GRADE: ALLOWABLE TOLERANCE BETWEEN STRUCTURES FROM DESIGN:
A. LINE: 0.20 FOOT
B. GRADE: 0.02 FOOT; PIPE SHALL NOT HOLD BACK ANY WATER.

FQC-3 LEAKAGE TEST:
AIR TEST REQUIRED; REFER TO SECTION 901.7 NM APWA.

FQC-4 TELEVISION INSPECTION:
CONTRACTOR SHALL PROVIDE A CERTIFIED CCTV SEWERLINE INSPECTION AND RECORD TAPES AT HIS OWN EXPENSE.

FQC-5 ALL CONNECTIONS TO EXISTING MANHOLES INCLUDES REHABILITATING THE TIE IN MANHOLE TO MEET THESE STANDARD CONSTRUCTION DETAILS.

NOTE: REVISIONS TO THIS SHEET SHALL BE MADE UNDER THE AUTHORITY OF THE CITY OF SANTA FE ONLY.

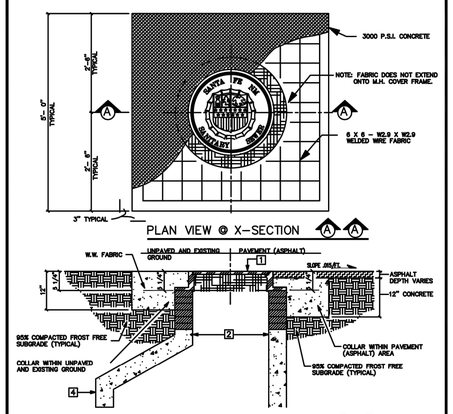


CONCRETE COLLAR DETAIL/DWG. # SAS-6 NOT TO SCALE

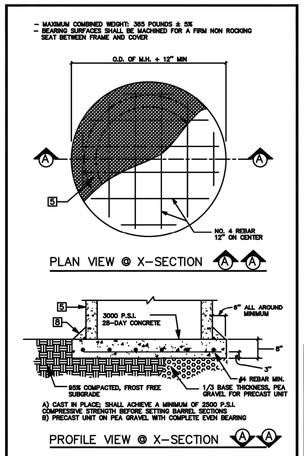


NOT TO SCALE

CONCRETE BASE DETAIL/DWG. # SAS-7

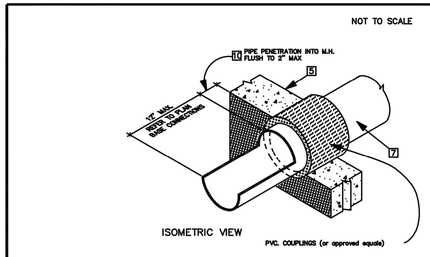


NOT TO SCALE

MANHOLE ADAPTER DETAIL/DWG. # SAS-8

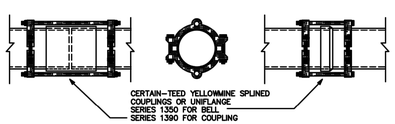


NOTE: AT RIVER AND ARROYO CROSSINGS

RESTRAINED JOINT DETAIL/DWG. # SAS-9 NOT TO SCALE

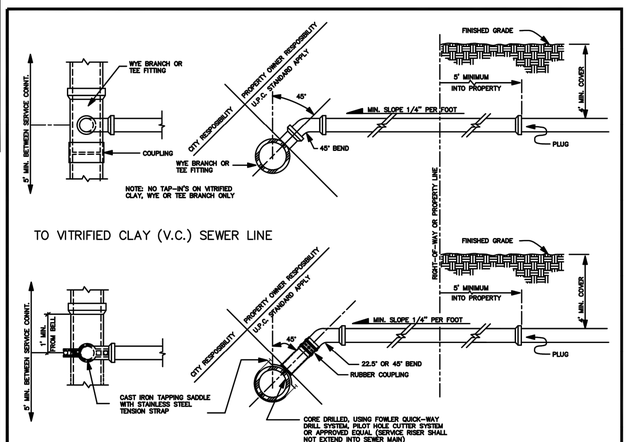


NOT TO SCALE

SERVICE CONNECTION DETAILS/DWG. # SAS-10

CITY OF SANTA FE
WATER QUALITY DIVISION

TITLE: SANITARY SEWER STANDARD CONSTRUCTION DETAILS

| | | |
|---|---|---|
| DATE: JULY 1992 | REVISIONS | FILE # E:\AUTO\DWG\SCDT2-4 |
| DRAWN BY: G. CHAVEZ | 1 8-3-92 | |
| CADD REVISION BY: G. CHAVEZ | 2 12-10-92 | SHEET OF |
| APPROVED BY: E. BROWN | 3 11-16-94 | |

DESIGNED SEG
DRAWN SEG
CHECKED JL
DATE 12.12.2024

REVISION


COMMUNITY DESIGN SOLUTIONS
9384 Valley View Drive NW, Suite 100
Albuquerque, NM 87144
505.366.4187


STAMP

SHELDON E. GREER NEW MEXICO 17154 REGISTERED PROFESSIONAL ENGINEER 10/08/2025

THIS DRAWING IS INCOMPLETE AND NOT TO BE USED FOR CONSTRUCTION UNLESS IT IS STAMPED, SIGNED AND DATED

nm811 Know what's below. Call before you dig.

PROJ. #: 04197.006

PROJECT NAME: PULTE CAJA DEL ORO PHASE 2

SHEET TITLE: SEWER DETAILS

SUBMITTED FOR: CONSTRUCTION

SHEET NUMBER: C-504

NAME: P:\04197 Pulte\04197.006 Pulte Caja del Oro\3. DWG\Sheets\Phase II\C-509 Cattle Guard Detail.dwg PLOT DATE: Dec 12, 2024 12:42pm

# TRENCH BEDDING AND INSTALLATION DETAILS/DWG. # SAS-11

NOT TO SCALE

## CLASS "A"

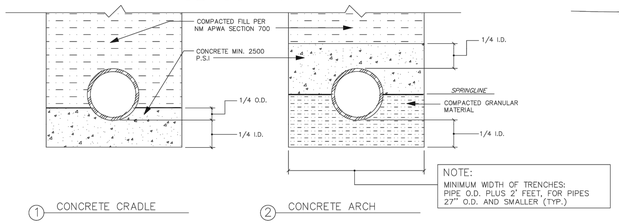


① CONCRETE CRADLE ② CONCRETE ARCH

## CLASS "B"

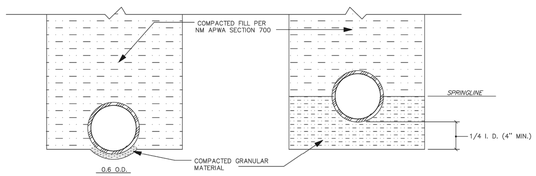


① SHAPED SUBGRADE WITH GRANULAR FOUNDATION ② GRANULAR FOUNDATION

## CLASS "C"

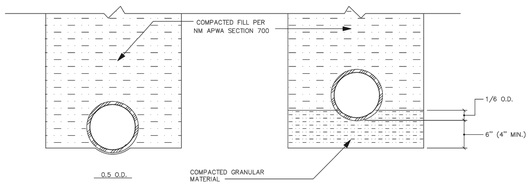


① SHAPED SUBGRADE ② GRANULAR FOUNDATION

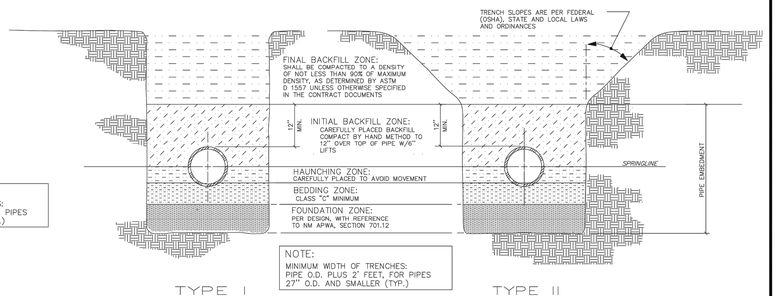


TYPE I TYPE II

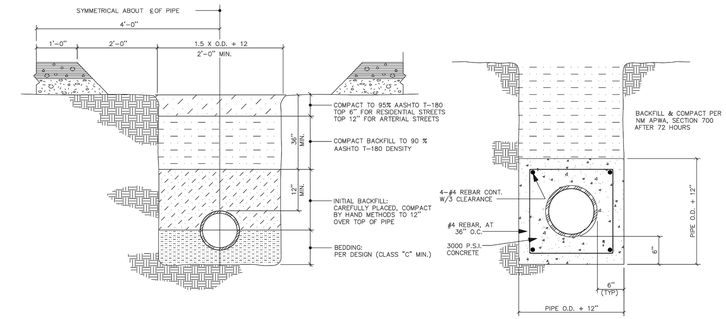


PAVED AREAS CONCRETE ENCASEMENT

# TYPICAL UTILITIES SEPARATION DETAIL/DWG. # SAS-12

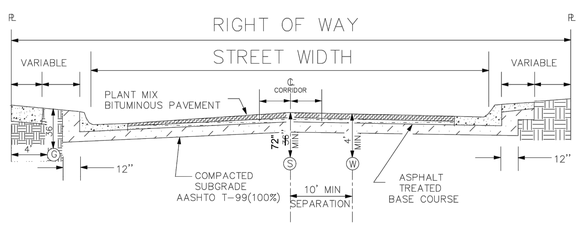


NOT TO SCALE

# BEL[illegible]OR COUPLING INSTALLATION DETAIL/DWG. # SA[illegible]13

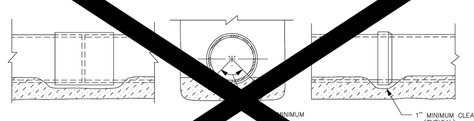


NOT TO SCALE

# GENERAL NOTES

## CONSTRUCTION REQUIREMENTS

CR-1 MATERIALS AND WORK:
CURRENT NEW MEXICO STANDARD SPECIFICATIONS FOR PUBLIC WORKS CONSTRUCTION (referred to as NM APWA) WITH MODIFICATIONS NOTED BY THE CITY OF SANTA FE.

CR-2 APPROVED PLANS:
USE PLANS BEARING THE OFFICIAL STAMP OF THE DESIGN ENGINEER AND BEARING THE APPROVAL SIGNATURE OF THE CITY WATER QUALITY DIVISION OR APPROVED REPRESENTATIVE. CONSTRUCTION PERFORMED WITHOUT APPROVED PLANS WILL BE REJECTED.

CR-3 SEWER HOOK-UP PERMIT:
OBTAIN PERMITS FOR THE PROJECT BEFORE COMMENCING ANY SEWER CONSTRUCTION. CONSTRUCTION PERFORMED WITHOUT OBTAINING PERMITS SHALL BE REJECTED.
A. CONSTRUCTION PLANS SHALL INDICATE THE CLASS OF BEDDING TO BE USED. CHANGE OF BEDDING MAY REQUIRE A CHANGE IN PIPE CLASSIFICATION OR WALL THICKNESS.

CR-4 SUBSTITUTIONS OR CHANGES:
ALL SUBSTITUTIONS OR CHANGES MUST BE APPROVED BY THE CITY WATER QUALITY DIVISION OR CITY APPROVED REPRESENTATIVE PRIOR TO CONSTRUCTION. ALL SUBSTITUTIONS OR CHANGES MUST BE SUBMITTED BY THE DESIGN ENGINEER TO THE CITY WATER QUALITY DIVISION OR APPROVED REPRESENTATIVE. WHERE APPROPRIATE, SUBMITTAL MUST INCLUDE FABRICATION DRAWINGS, WORKING DRAWINGS AND MATERIAL SPECIFICATIONS OR TEST DATA TO JUSTIFY SUBSTITUTIONS OR CHANGES. DESIGN ENGINEER SHALL AUTHORIZE ANY DRAWINGS FOR SUBSTITUTIONS AND CHANGES AND SUBMIT THEM TO THE CITY WATER QUALITY DIVISION FOR APPROVAL. UNAUTHORIZED SUBMITTALS WILL BE REJECTED.

CR-5 MANUFACTURER'S CERTIFICATES:
WHEN CERTIFICATES OF COMPLIANCE AND TEST REPORTS ARE REQUIRED FOR MATERIALS, DOCUMENTS SHALL BE SUBMITTED TO THE CITY WATER QUALITY DIVISION OR APPROVED REPRESENTATIVE AT THE TIME OF MATERIALS DELIVERY TO THE JOBSITE.

CR-6 CONTRACTOR REQUIREMENTS:
CONTRACTOR PERFORMING WORK ON PUBLIC SEWER LINES SHALL BE A LICENSED UTILITY CONTRACTOR.

## INSTALLATION

I-1 LAYING PIPE:
AS PER SECTION 900, NM APWA; PIPE SHALL BE PLACED AND BEDDED IN A FROST FREE TRENCH; GASKET SHALL BE FULLY SEATED AND NOT SLIPPED; PIPE SHALL BE LAID THROUGH MANHOLE LOCATIONS ON STRAIGHT AND UP TO 22 1/2 DEGREE DEFLECTIONS.
A. IF PIPE TRENCH INSTALLATION CONFIGURATION EXCEEDS THE LIMITS OF NM APWA STANDARDS, SECTION 700, OR AS DEFINED ON THE CONSTRUCTION PLANS, THE DESIGN ENGINEER WILL SPECIFY THE NEW PIPE CLASSIFICATION OR WALL THICKNESS.
B. TYPE I TRENCH CONFIGURATION IS NORMALLY USED WHEN TRENCH DEPTHS ARE 8'(FT.) OR LESS. TYPE II TRENCH CONFIGURATION IS NORMALLY USED WHEN TRENCH DEPTHS ARE 9'(FT.) AND OVER, DEPENDING ON SOIL CONDITIONS. REFER TO NM APWA STANDARDS SECTION 700.

I-2 MANHOLE CONSTRUCTION:
A. BASE:
1. CAST IN PLACE: ON UNDISTURBED FROST FREE SUBGRADE
2. PRECAST UNIT: ON PEA GRAVEL WITH COMPLETE EVEN BEARING
B. PRECAST BARREL:
1. JOINTS: FILL COMPLETELY WITH NON-SHRINK GROUT AND TROWEL.
2. MANHOLE ADAPTOR: INSTALL OVER PVC PIPE AND FILL IN PENETRATION WITH NON-SHRINK GROUT.
3. CAST IN PLACE BASES: SHALL ACHIEVE A MINIMUM OF 2500 PSI COMPRESSIVE STRENGTH BEFORE SETTING PRECAST BARREL SECTIONS.

I-3 EXCAVATION AND BACKFILL:
AS PER SECTION 700, NM APWA; SATURATION BY FLOODING OR JETTING METHODS IS NOT PERMITTED WITHOUT A SOILS ENGINEERING REPORT RECOMMENDING THESE METHODS. MECHANICAL OR VIBRATORY COMPACTORS SHALL NOT BE USED ON THE BEDDING AND 12"(IN.) OF INITIAL BACKFILL. COMPACTION SHALL BE DETERMINED PER AASHTO T-180.

## CONSTRUCTION MATERIALS

CM-1 SEWER PIPE: (CERTIFICATES REQUIRED)
A. VITRIFIED CLAY: REFER TO SECTION 125, NM APWA FOR EXTRA STRENGTH VCP.
B. PLASTIC (PVC): REFER TO SECTION 121, NM APWA, AS MODIFIED BY THE CITY.
1. 4" THRU 15" (inch) DIAMETER, ASTM D-3034 OR ASTM F-789 PIPE. MINIMUM PS-46 STRENGTH. SDR-35 OR EQUAL
2. LARGER THAN 15" (IN.) DIAMETER: ASTM F 679 VOL. 08.04.
C. HDPE PIPE PER ASTM D-1248 CLASS III WHEN APPROVED BY WATER QUALITY DIVISION ENGINEER.
D. PVC RESTRAINED JOINTS: SERIES 1350 OR SERIES 1390 FOR COUPLINGS PRODUCED BY UNI-FLANGE CORPORATION, LOCKING COUPLINGS WITH NYLON SPLINE, MARKETED AS "YELLOWMINC" AND PRODUCED BY CERTAINTEED CORPORATION, OR APPROVED EQUAL.
E. MANHOLE ADAPTERS: ASBESTOS CEMENT (AC) MANHOLE ADAPTERS, OR AC/PVC ADAPTER COUPLINGS.
F. BUILDING SERVICE STUBS: CAST IRON DWV, PVC SCH. 40 DWV.
G. SERVICE CONNECTIONS:
1. VCP PIPE: FACTORY TEE FITTINGS; SECTION 125 NM APWA.
2. PVC PIPE: CAST IRON BODIES TAPPING SADDLE WITH STAINLESS STEEL TENSION STRAP AND FITTINGS; FOWLER "QUICKWAY",GENECO, HERSEY "PIONEER", OR APPROVED EQUAL.
H. SOIL CLASSIFICATION: THE UNIFIED SOIL CLASSIFICATION SYSTEM PER ASTM D 2487 TABLE 701.3.5 NM APWA.

CM-2 MANHOLES:
A. CONCRETE MANHOLES: PRECAST REINFORCED CONCRETE RISERS, REDUCING CONES, AND ADJUSTMENT RINGS PER ASTM C 478 VOL. 04.05. BASES MAY BE FIELD PLACED CONCRETE OR PRECAST CONCRETE PER ASTM C 478 VOL. 04.05 (CERTIFICATES REQUIRED). CRACKED OR VISIBLY DEFECTIVE UNITS WILL BE REJECTED.
B. PIPE PENETRATIONS: PRECAST UNITS SHALL HAVE SUITABLE SIZED OPENINGS CAST INTO BARREL AT PROPER ANGLES FOR PIPE AND MANHOLE ADAPTERS.
C. MANHOLE STEPS: REFER TO SECTION 920.4.7 NM APWA POLYPROPYLENE ENCASED GRADE 60 STEEL BY M.A. INC. OR APPROVED EQUAL; 14"(IN.) WIDE, 16"(IN.) MAXIMUM SPACING.
D. FRAMES AND COVERS:
1. CASTING: SHALL CONFORM TO SECTION 160, 161 & 162, NM, APWA CLASS 30B. (CERTIFICATES AND SHOP DRAWINGS REQUIRED)
2. MINIMUM COVER WEIGHT: 165 POUNDS
3. MINIMUM COMBINED WEIGHT: 365 POUNDS
4. BEARING SURFACES: SHALL BE MATCHED FOR A FIRM NON ROCKING SEAT BETWEEN FRAME AND COVER. MINIMUM SEATING WIDTH: 7/8"(IN.)
5. COATING: NONE
6. COVER LETTERINGS: SANTA FE, N.M. SANITARY SEWER
7. CASTINGS: CAST MANUFACTURER AND MODEL NUMBER ON FRAME AND COVER.
8. CASTINGS TOLERANCE: +/- 1/16"(IN.) PER FOOT OF OVERALL DIMENSION. OUT OF ROUND CASTINGS AND LOOSE FITTING UNITS WILL BE REJECTED IN THE FIELD.

CM-3 CONCRETE ENCASEMENT:
A. REQUIREMENTS:
1. WHEN THE PIPE COVER IS 36" (IN.) OR LESS.
2. WHEN VITRIFIED CLAY CROSSES AN ARROYO.
3. WHEN A WATER LINE PASSES BELOW OR LESS THAN 18" (IN.) ABOVE THE EXISTING SEWER LINE.
4. WHEN A PARALLEL WATER LINE IS LESS THAN 10'(FT.) HORIZONTALLY AND LESS THAN 2'(FT.) ABOVE THE SEWER LINE.
5. THE SEWER LINE SHALL BE ENCASED IN CONCRETE 6"(IN.) THICK AS DETAILED, AND EXTEND AT LEAST 10'(FT.) ON EACH SIDE OF THE WATER LINE.

## FIELD QUALITY CONTROL

FQC-1 TESTING AND INSPECTION:
A. SUPERVISION: CONDUCTED BY DESIGN ENGINEER.
B. CERTIFICATION: DESIGN ENGINEER SHALL CERTIFY THAT THE PROJECT HAS BEEN COMPLETED IN ACCORDANCE TO PLANS & SPECIFICATIONS AND SHALL SUBMIT A CERTIFICATION OF COMPLIANCE STATEMENT WITH STAMP AND SIGNATURE.
C. EQUIPMENT AND ASSISTANCE: PROVIDED BY CONTRACTOR.

FQC-2 LINE AND GRADE: ALLOWABLE TOLERANCE BETWEEN STRUCTURES FROM DESIGN;
A. LINE: 0.20 FOOT
B. GRADE: 0.02 FOOT; PIPE SHALL NOT HOLD BACK ANY WATER.

FQC-3 LEAKAGE TEST:
AIR TEST REQUIRED; REFER TO SECTION 901.7 NM APWA.

FQC-4 TELEVISION INSPECTION:
CONTRACTOR SHALL PROVIDE A CERTIFIED CCTV SEWERLINE INSPECTION AND RECORD TAPES AT HIS OWN EXPENSE.

FQC-5 ALL CONNECTIONS TO EXISTING MANHOLES INCLUDES REHABILITATING THE TIE IN MANHOLE TO MEET THESE STANDARD CONSTRUCTION DETAILS.

NOTE: REVISIONS TO THIS SHEET SHALL BE MADE UNDER THE AUTHORITY OF THE CITY OF SANTA FE ONLY.

CITY OF SANTA FE
WATER QUALITY DIVISION

TITLE: SANITARY SEWER STANDARD CONSTRUCTION DETAILS

| | | | |
|---|---|---|---|
| DATE: JULY 1992 | REVISIONS | | FILE #: E:\AUTO\DWG\SCDT3-4 |
| DRAWN BY: G. CHAVEZ | 1 8-4-92 | 3 | |
| CAD RENDITION BY: G. CHAVEZ | 2 12-14-92 | 4 | SHEET OF |
| APPROVED BY: E. BROWN | 3 11-16-94 | 5 | |

DESIGNED SEG
DRAWN SEG
CHECKED JL
DATE 12.12.2024

REVISION

COMMUNITY DESIGN SOLUTIONS
9384 Valley View Drive NW, Suite 100
Albuquerque, NM 87144
505.366.4187

STAMP




THIS DRAWING IS INCOMPLETE AND NOT TO BE USED FOR CONSTRUCTION UNLESS IT IS STAMPED, SIGNED AND DATED

nm811 Know what's below. Call before you dig.

PROJ. #: 04197.006

PROJECT NAME: PULTE CAJA DEL ORO PHASE 2

SHEET TITLE: SEWER DETAILS

SUBMITTED FOR: CONSTRUCTION

SHEET NUMBER: C-505

NAME: P:\04197 Pulte\04197.006 Pulte Caja del Oro\3. DWG\Sheets\Phase II\C-509 Cattle Guard Detail.dwg PLOT DATE: Dec 12, 2024 12:42pm

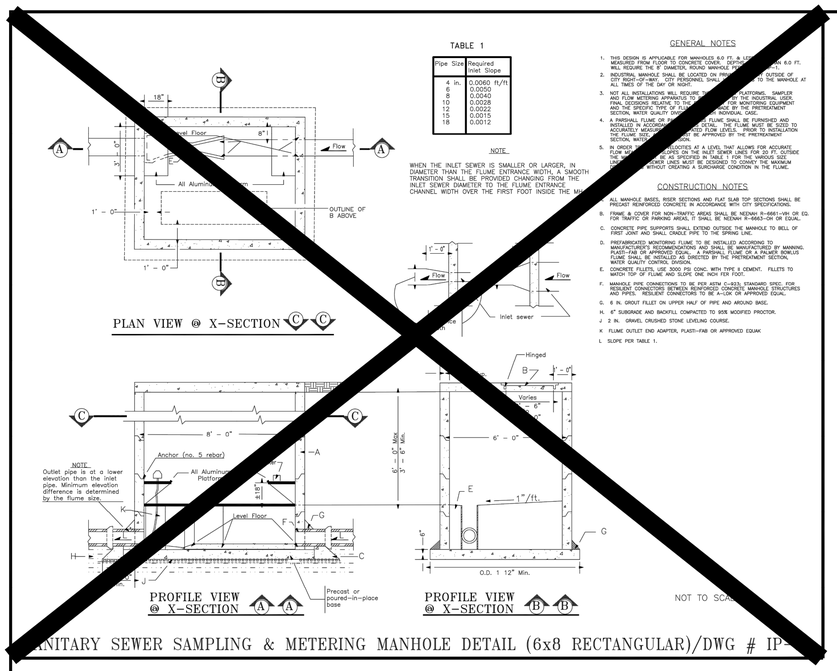


SANITARY SEWER SAMPLING & METERING MANHOLE DETAIL (6x8 RECTANGULAR)/DWG # IP-

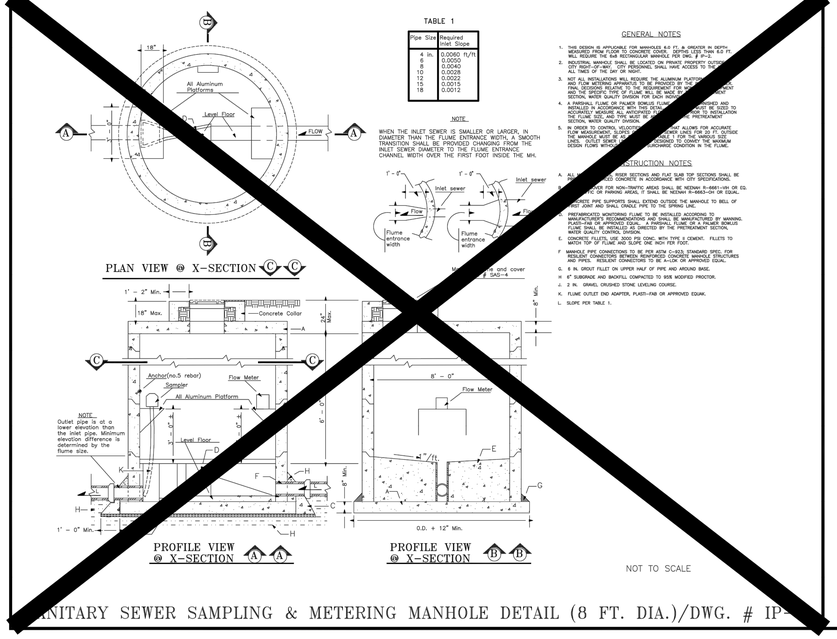


SANITARY SEWER SAMPLING & METERING MANHOLE DETAIL (8 FT. DIA.)/DWG. # IP-

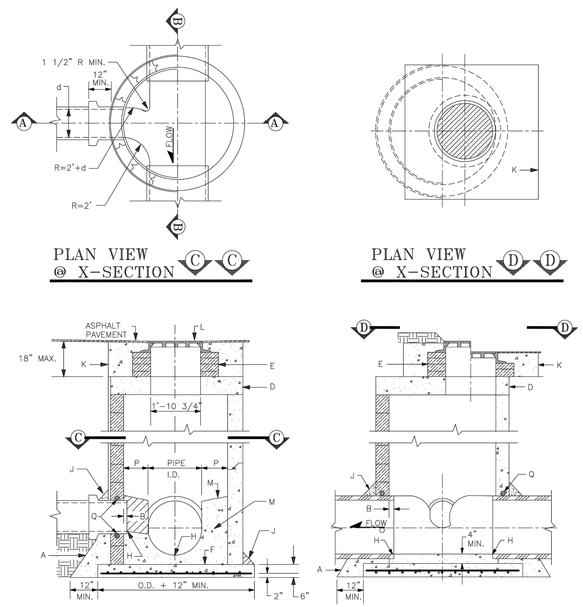


## GENERAL NOTES

1. USE APPROVED MASTIC JOINT MATERIAL FOR ALL JOINTS.
2. CONTRACTOR HAS OPTION TO CONSTRUCT TYPE "C" M.H. IN LIEU OF TYPE "E" M.H. FOR DEPTHS OF 6' OR MORE.
3. DESIGN APPLIES TO 4', 6' & 8' MANHOLES.
4. M.H. GREATER THAN 18' IN DEPTH SHALL ONLY BE CONSTRUCTED OF PRECAST CONCRETE SECTION.
5. USE NON-SHRINK GROUT FOR FILLETS AND PENETRATIONS.
6. POSITION M.H. OPENING OVER THE UPSTREAM SIDE OF MAIN LINE.

## CONSTRUCTION NOTES

A. CONCRETE PIPE SUPPORT SHALL EXTEND OUTSIDE OF M.H. TO BELL OF FIRST JOINT & SHALL CRADLE PIPE TO SPRING LINE. NOT APPLICABLE FLEXIBLE PIPE.
B. PIPE PENETRATION INTO MANHOLE SHALL BE FLUSH TO 2" MAX., MEASURED AT SPRING LINE OF PIPE.
D. PRECAST CONCRETE COVER
E. USE MAX. 4 COURSES GR. MS BRICK ON UNPAVED STREET FOR FUTURE ADJ. OF M.H. FRAME TO PAVEMENT GRADE. PLASTER INSIDE WITH 1/2" MORTAR.
F. CONCRETE BASE TO BE POURED IN PLACE USING NO. 4 BARS AT 6" O.C. EA. WAY FOR M.H. DEPTH OF 16' OR GREATER. NO 4 BARS AT 12" O.C. EA. WAY FOR M.H. LESS THAN 16' IN DEPTH.
H. INV. ELEV. OF STUB OR LATERAL AS SHOWN ON PLANS.
J. 6" GROUT FILLET ON UPPER HALF OF PIPE AND AROUND BASE.
K. USE A 5'x 5' CONCRETE PAD IN ALL AREAS SLOPE FOR GRADER USE UNPAVED AREAS.
L. FRAME AND COVER, SEE DWG. # SAS-4
M. CONCRETE FILL, 3000 PSI
N. SLOPE 1" PER FT. FROM PIPE CROWN
P. SHELF TO BE 9" WIDE MIN.
Q. APPROVED WATERSTOP TO BE COMPATIBLE WITH TYPE OF PIPE.

MANHOLE TYPE "C" DETAIL/DWG. # SAS-14 NOT TO SCALE

CITY OF SANTA FE
WATER QUALITY DIVISION

TITLE: SANITARY SEWER STANDARD CONSTRUCTION DETAILS

| | | |
|---|---|---|
| DATE: JULY 1992 | REVISIONS | FILE #: E:\AUTO\DWG\SCDT4-4 |
| DRAWN BY: G. CHAVEZ | 8-4-92 | |
| CAD/ RENDITION BY: G. CHAVEZ | | SHEET OF |
| APPROVED BY: E. BROWN | | |

DESIGNED SEG
DRAWN SEG
CHECKED JL
DATE 12.12.2024

REVISION

COMMUNITY DESIGN SOLUTIONS
9384 Valley View Drive NW, Suite 100
Albuquerque, NM 87144
505.366.4187

STAMP

SHELDON E. GREER NEW MEXICO 17154 REGISTERED PROFESSIONAL ENGINEER 10/08/2025

THIS DRAWING IS INCOMPLETE AND NOT TO BE USED FOR CONSTRUCTION UNLESS IT IS STAMPED, SIGNED AND DATED

nm811 Know what's below. Call before you dig.

PROJ. #: 04197.006

PROJECT NAME: PULTE CAJA DEL ORO PHASE 2

SHEET TITLE: SEWER DETAILS

SUBMITTED FOR: CONSTRUCTION

SHEET NUMBER: C-506

NAME: P:\04197 Pulte\04197.006 Pulte Caja del Oro\3. DWG\Sheets\Phase II\C-509 Cattle Guard Detail.dwg PLOT DATE: Dec 12, 2024 12:42pm

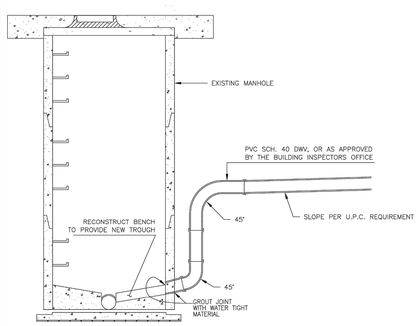


LATERAL CONNECTION TO MANHOLE
DWG. #SAS-15

NOT TO SCALE

**CONSTRUCTION NOTES**

- Concrete to be 3000 psi 28 day strength

For additional information refer to Sanitary Sewer Standard Construction Details Sheet #1, GENERAL NOTES

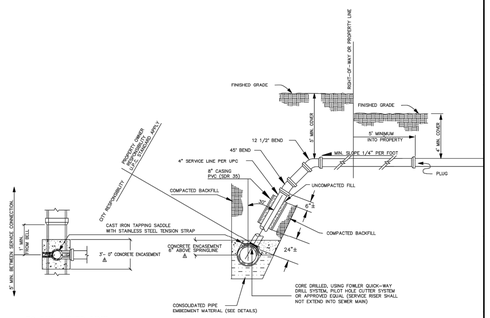


**TO PVC SEWER LINE**

SERVICE CONNECTION DETAIL FOR SEWER MAIN
DEPTHS GREATER THAN 10 FT.
DWG. #SAS-16

NOT TO SCALE

CITY OF SANTA FE
WATER QUALITY CONTROL DIVISION

TITLE: SANITARY SEWER STANDARD CONSTRUCTION DETAILS (SHEET 5 PRELIMINARY)

| DATE: 1-24-94 | REVISIONS | | FILE #: SCDT5 |
|---|---|---|---|
| DRAWN BY: G. CHAVEZ | | | |
| CADD RENDITION BY: G. CHAVEZ | | | SHEET OF |
| APPROVED BY: E. BROWN | | | |

DESIGNED SEG
DRAWN SEG
CHECKED JL
DATE 12.12.2024

REVISION

COMMUNITY DESIGN SOLUTIONS
9384 Valley View Drive NW, Suite 100
Albuquerque, NM 87144
505.366.4187

STAMP

SHELDON E. GREER
NEW MEXICO
17154
LICENSED PROFESSIONAL ENGINEER
12/12/2024

THIS DRAWING IS INCOMPLETE AND NOT TO BE USED FOR CONSTRUCTION UNLESS IT IS STAMPED, SIGNED AND DATED

nm811 Know what's below. Call before you dig.

PROJ. #: 04197.006

PROJECT NAME: PULTE CAJA DEL ORO PHASE 2

SHEET TITLE: SEWER DETAILS

SUBMITTED FOR: CONSTRUCTION

SHEET NUMBER: C-507

NAME: P:\04197 Pulte\04197.006 Pulte Caja del Oro\3. DWG\Sheets\Phase II\C-509 Cattle Guard Detail.dwg PLOT DATE: Dec 12, 2024 12:42pm

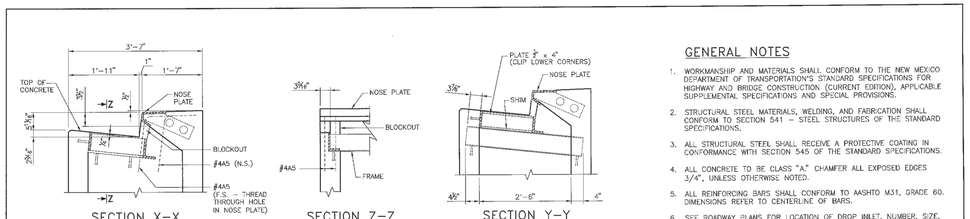


## GENERAL NOTES

1. WORKMANSHIP AND MATERIALS SHALL CONFORM TO THE NEW MEXICO DEPARTMENT OF TRANSPORTATION'S STANDARD SPECIFICATIONS FOR HIGHWAY AND BRIDGE CONSTRUCTION (CURRENT EDITION), APPLICABLE SUPPLEMENTAL SPECIFICATIONS AND SPECIAL PROVISIONS.
2. STRUCTURAL STEEL MATERIALS, WELDING, AND FABRICATION SHALL CONFORM TO SECTION 541 – STEEL STRUCTURES OF THE STANDARD SPECIFICATIONS.
3. ALL STRUCTURAL STEEL SHALL RECEIVE A PROTECTIVE COATING IN CONFORMANCE WITH SECTION 545 OF THE STANDARD SPECIFICATIONS.
4. ALL CONCRETE TO BE CLASS "A" CHAMFER ALL EXPOSED EDGES 3/4", UNLESS OTHERWISE NOTED.
5. ALL REINFORCING BARS SHALL CONFORM TO AASHTO M31, GRADE 60. DIMENSIONS REFER TO CENTERLINE OF BARS.
6. SEE ROADWAY PLANS FOR LOCATION OF DROP INLET, NUMBER, SIZE, AND FLOW LINE ELEVATIONS OF PIPE DRAINS, AND "H" DIMENSION.
7. OUTLET PIPES SHALL NOT BE SET AT END OF DROP INLET.

## DESIGN DATA:

DESIGN IS IN ACCORDANCE WITH AASHTO LRFD SPECIFICATIONS 2010 FIFTH EDITION AND CURRENT INTERIMS.

DESIGN STRESSES: STRUCTURAL STEEL: ASTM A-36 FY = 36 KSI

REINFORCED CONCRETE: F'c = 3,000 PSI @ 28 DAYS Fy = 60 ksi, GRADE 60

LIVE LOAD: HL-93

HORIZONTAL EARTH PRESSURE: 36 LBS./CU.FT. EQUIVILENT FLUID PRESSURE WITH 2' LIVE LOAD SURCHARGE

MAXIMUM: H = 11'-6"

## ESTIMATED QUANTITIES

| TYPE | N | L | CLASS "A" CONC. † CU. YDS. | REINFORCING BARS – LBS. H = 8'-0" OR LESS | H = 8'-1" TO 10'-0" | H = 10'-0" TO 11'-6" | STRUCTURAL STEEL – LBS. |
|---|---|---|---|---|---|---|---|
| I | 1 | 5'-7" | 0.324H+0.698 | 23.870 H + 94.779 | 25.205 H + 95.448 | 35.894 H + 100.790 | 570 |
| II | 2 | 10'-5" | 0.528H+1.357 | 37.319 H + 180.150 | 41.327 H + 182.185 | 58.185 H + 190.838 | 1186 |
| III | 3 | 15'-9" | 0.732H+2.017 | 50.768 H + 265.518 | 57.448 H + 268.858 | 81.496 H + 280.882 | 1796 |
| IV | 4 | 20'-10" | 0.936H+2.676 | 64.217 H + 350.887 | 73.569 H + 354.563 | 104.297 H + 370.927 | 2412 |
| V | 5 | 25'-11" | 1.140H+3.335 | 77.662 H + 436.258 | 89.690 H + 442.270 | 127.098 H + 460.974 | 3022 |
| VI | 6 | 31'-0" | 1.344H+3.995 | 91.115 H + 521.716 | 105.811 H + 528.974 | 149.899 H + 551.018 | 3631 |

† SEE TABLE FOR PIPE DEDUCTION
N = NUMBER OF GRATINGS PLACED IN DROP INLET
H = NORMAL GUTTER ELEVATION TO FLOW LINE ELEVATION OF OUTLET PIPE. USE H IN FEET.

## CLASS "A" CONCRETE DEDUCTIONS FOR ONE PIPE

| SIZE | CONCRETE PIPE | METAL PIPE |
|---|---|---|
| 18" | 0.06 CU. YDS. | 0.04 CU. YDS. |
| 24" | 0.10 CU. YDS. | 0.06 CU. YDS. |
| 30" | 0.15 CU. YDS. | 0.10 CU. YDS. |
| 36" | 0.21 CU. YDS. | 0.14 CU. YDS. |
| 42" | 0.28 CU. YDS. | 0.19 CU. YDS. |

NOTE:
DEDUCTIONS NOTED ARE FOR PIPES NORMAL TO WALLS. FOR SKEWED PIPES, MULTIPLY DEDUCTIONS BY SECANT OF SKEW ANGLE. FOR SMALLER PIPES OTHER THAN THOSE SHOWN IN TABLE, ADJUST DEDUCTIONS ACCORDINGLY.

## REINFORCING BAR SCHEDULE

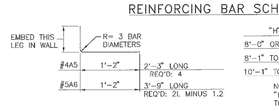


| "H" | SPACES | #4A7 | REQUIRED |
|---|---|---|---|
| 8'-0" OR LESS | 10" | H PLUS 6" | 12 N + 2 |
| 8'-1" TO 10'-0" | 8" | H PLUS 6" | 16 N |
| 10'-1" TO 11'-6" | 6½" | H PLUS 6" | 26 N + 6 |

NOTE:
"H" AND "L" ARE IN FEET. FINISH BARS TO THE NEAREST WHOLE NUMBER OF BARS.

SERIALS 623-14-1/3 AND 623-14-3/3 MUST ACCOMPANY THIS SHEET.

| DATE | BY | DESCRIPTION |
|---|---|---|
| 1/33/12 | YML | REVISED TO LRFD. REVISIONS (OR CHANGE NOTICES) |

NEW MEXICO DEPARTMENT OF TRANSPORTATION STANDARD DRAWING

DROP INLET FOR TYPE "B" CURBS GRATES, FRAMES, NOSE PLATES AND CENTER SUPPORT BEAMS

DESIGNED BY:YML DRAWN BY:SKL CHECKED BY:YML/TM

623-14-2/3 2 of 3

Sheet 623-17

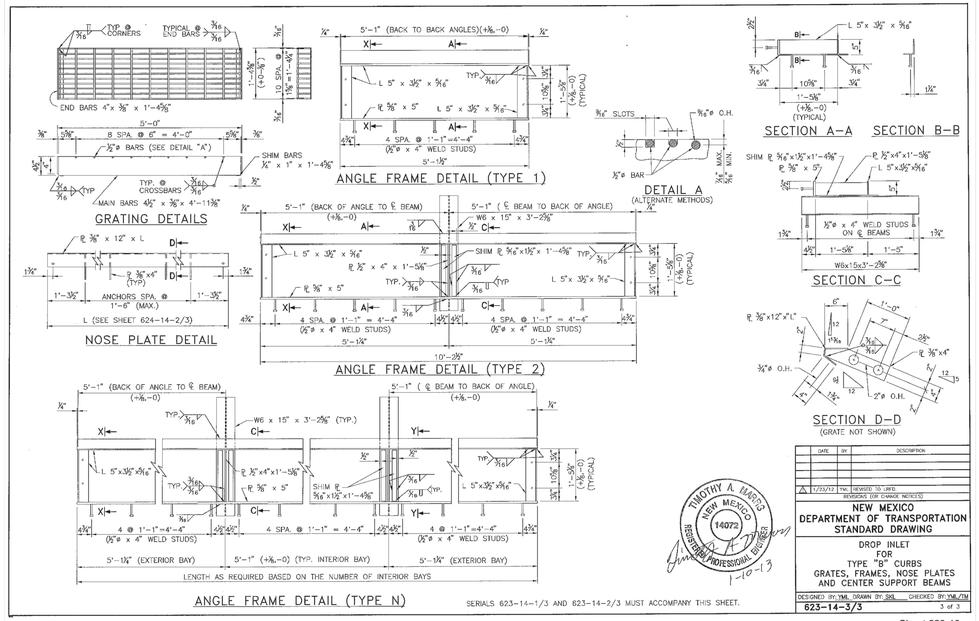


SERIALS 623-14-1/3 AND 623-14-2/3 MUST ACCOMPANY THIS SHEET.

| DATE | BY | DESCRIPTION |
|---|---|---|
| 1/33/12 | YML | REVISED TO LRFD. REVISIONS (OR CHANGE NOTICES) |

NEW MEXICO DEPARTMENT OF TRANSPORTATION STANDARD DRAWING

DROP INLET FOR TYPE "B" CURBS GRATES, FRAMES, NOSE PLATES AND CENTER SUPPORT BEAMS

DESIGNED BY:YML DRAWN BY:SKL CHECKED BY:YML/TM

623-14-3/3 3 of 3

Sheet 623-18

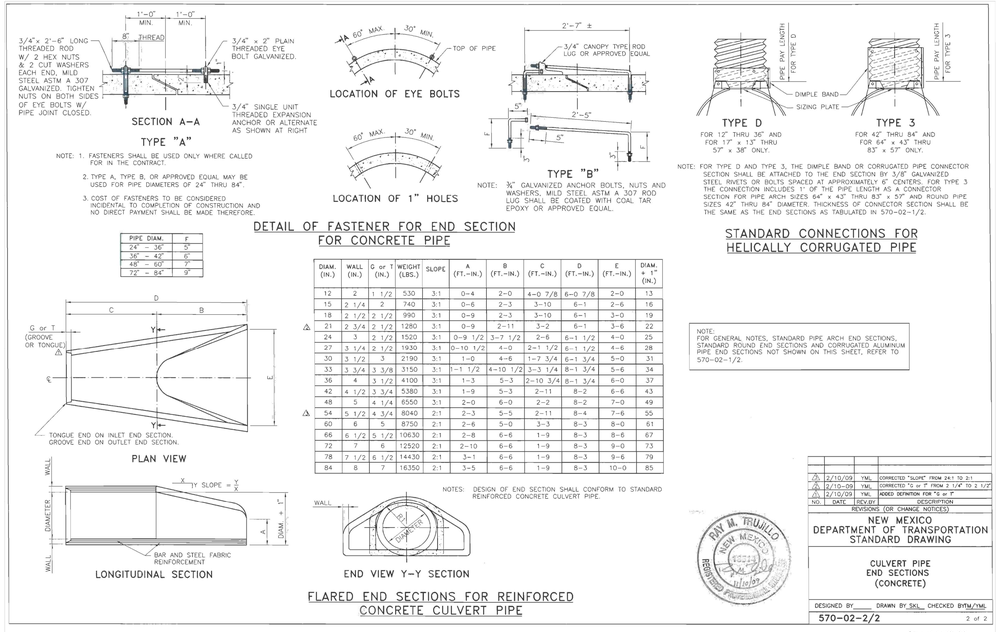


| DIAM. (IN.) | WALL (IN.) | G or T (IN.) | WEIGHT (LBS.) | SLOPE | A (FT.-IN.) | B (FT.-IN.) | C (FT.-IN.) | D (FT.-IN.) | E (FT.-IN.) | DIAM. + 1" (IN.) |
|---|---|---|---|---|---|---|---|---|---|---|
| 12 | 2 | 1 1/2 | 530 | 3:1 | 0-4 | 2-0 | 4-0 7/8 | 6-0 7/8 | 2-0 | 13 |
| 15 | 2 1/4 | 2 | 740 | 3:1 | 0-6 | 2-3 | 3-10 | 6-1 | 2-6 | 16 |
| 18 | 2 1/2 | 2 1/2 | 990 | 3:1 | 0-9 | 2-3 | 3-10 | 6-1 | 3-0 | 19 |
| 21 | 2 3/4 | 2 1/2 | 1280 | 3:1 | 0-9 | 2-11 | 3-2 | 6-1 | 3-6 | 22 |
| 24 | 3 | 2 1/2 | 1520 | 3:1 | 0-9 1/2 | 3-7 1/2 | 2-6 | 6-1 1/2 | 4-0 | 25 |
| 27 | 3 1/4 | 2 1/2 | 1930 | 3:1 | 0-10 1/2 | 4-0 | 2-1 1/2 | 6-1 1/2 | 4-6 | 28 |
| 30 | 3 1/2 | 3 | 2190 | 3:1 | 1-0 | 4-6 | 1-7 3/4 | 6-1 3/4 | 5-0 | 31 |
| 33 | 3 3/4 | 3 3/8 | 3150 | 3:1 | 1-1 1/2 | 4-10 1/2 | 1-3 1/4 | 6-1 3/4 | 5-6 | 34 |
| 36 | 4 | 3 1/2 | 4100 | 3:1 | 1-3 | 5-3 | 2-10 3/4 | 6-1 3/4 | 6-0 | 37 |
| 42 | 4 1/2 | 3 3/4 | 5380 | 3:1 | 1-9 | 5-3 | 2-11 | 8-2 | 6-6 | 43 |
| 48 | 5 | 4 1/4 | 6550 | 3:1 | 2-0 | 6-0 | 2-2 | 8-2 | 7-0 | 49 |
| 54 | 5 1/2 | 4 3/4 | 8040 | 2:1 | 2-3 | 5-5 | 2-11 | 8-4 | 7-6 | 55 |
| 60 | 6 | 5 | 8750 | 2:1 | 2-6 | 5-0 | 3-3 | 8-3 | 8-0 | 61 |
| 66 | 6 1/2 | 5 1/2 | 10630 | 2:1 | 2-8 | 6-6 | 1-9 | 8-3 | 8-6 | 67 |
| 72 | 7 | 6 | 12520 | 2:1 | 2-10 | 6-6 | 1-9 | 8-3 | 9-0 | 73 |
| 78 | 7 1/2 | 6 1/2 | 14430 | 2:1 | 3-1 | 6-6 | 1-9 | 8-3 | 9-6 | 79 |
| 84 | 8 | 7 | 16350 | 2:1 | 3-5 | 6-6 | 1-9 | 8-3 | 10-0 | 85 |

NOTES: DESIGN OF END SECTION SHALL CONFORM TO STANDARD REINFORCED CONCRETE CULVERT PIPE.

NOTE:
FOR GENERAL NOTES, STANDARD PIPE ARCH END SECTIONS, STANDARD ROUND END SECTIONS AND CORRUGATED ALUMINUM PIPE END SECTIONS NOT SHOWN ON THIS SHEET, REFER TO 570-02-1/2.










FLARED END SECTIONS FOR REINFORCED CONCRETE CULVERT PIPE

| NO. | DATE | REV.BY | DESCRIPTION |
|---|---|---|---|
| | | | REVISIONS (OR CHANGE NOTICES) |
| 3 | 2/10/09 | YML | CORRECTED "SLOPE" FROM 24:1 TO 2:1 |
| 2 | 2/10-09 | YML | CORRECTED "G or T" FROM 2 1/4" TO 2 1/2" |
| 1 | 2/10/09 | YML | ADDED DEFINITION FOR "G or T" |

NEW MEXICO DEPARTMENT OF TRANSPORTATION STANDARD DRAWING

CULVERT PIPE END SECTIONS (CONCRETE)

DESIGNED BY:____ DRAWN BY:SKL CHECKED BY:TM/YML

570-02-2/2 2 of 2

Sheet 570-03

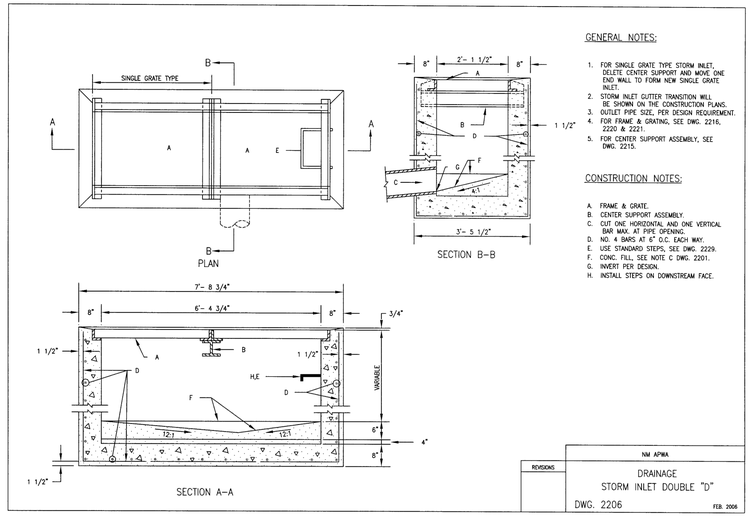


| REVISIONS | NM APWA |
|---|---|
| | DRAINAGE STORM INLET DOUBLE "D" DWG. 2206 FEB. 2006 |


DESIGNED SEG
DRAWN SEG
CHECKED JL
DATE 12.12.2024

COMMUNITY DESIGN SOLUTIONS
9384 Valley View Drive NW, Suite 100
Albuquerque, NM 87144
505.366.4187


REVISION

STAMP

SHELDON E. GREER NEW MEXICO 17154 LICENSED PROFESSIONAL ENGINEER 08/08/2025

THIS DRAWING IS INCOMPLETE AND NOT TO BE USED FOR CONSTRUCTION UNLESS IT IS STAMPED, SIGNED AND DATED

nm811 Know what's below. Call before you dig.

PROJ. #: 04197.006

PROJECT NAME: PULTE CAJA DEL ORO PHASE 2

SHEET TITLE: STREET & INLET DETAILS

SUBMITTED FOR: CONSTRUCTION

SHEET NUMBER: C-506

NAME: P:\04197 Pulte\04197.006 Pulte Caja del Oro\3. DWG\Sheets\Phase II\C-509 Cattle Guard Detail.dwg PLOT DATE: Dec 12, 2024 - 12:43pm

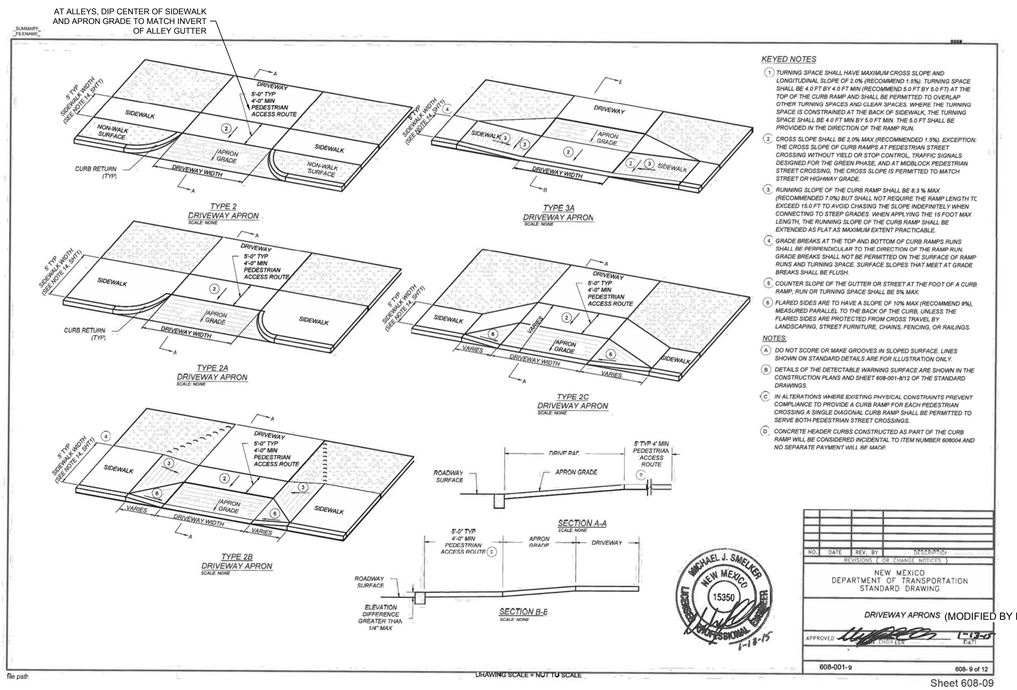


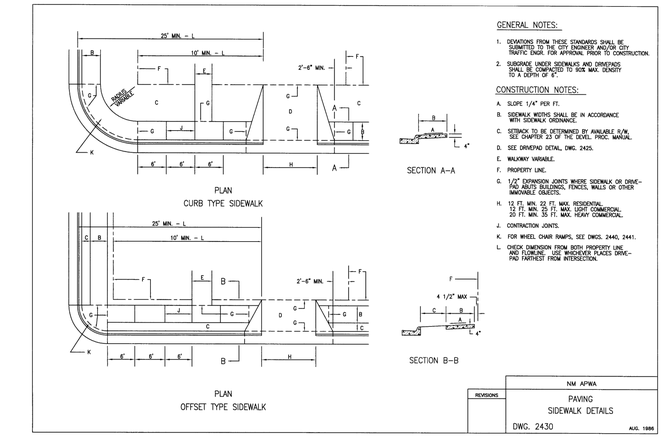


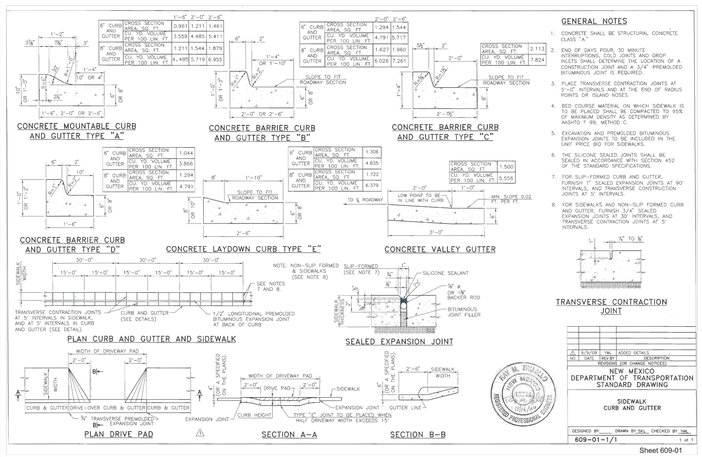


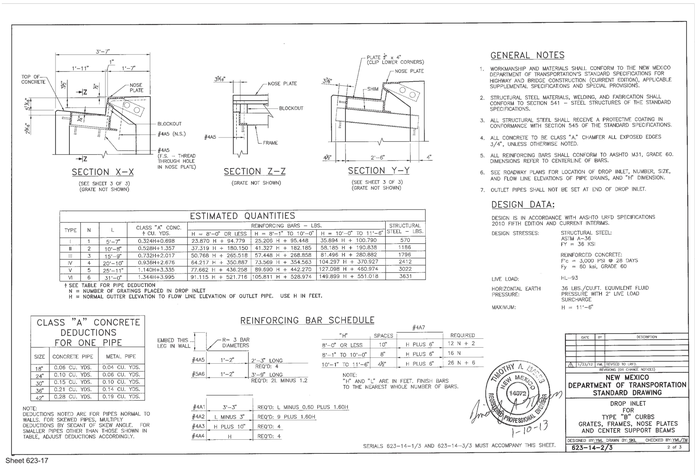


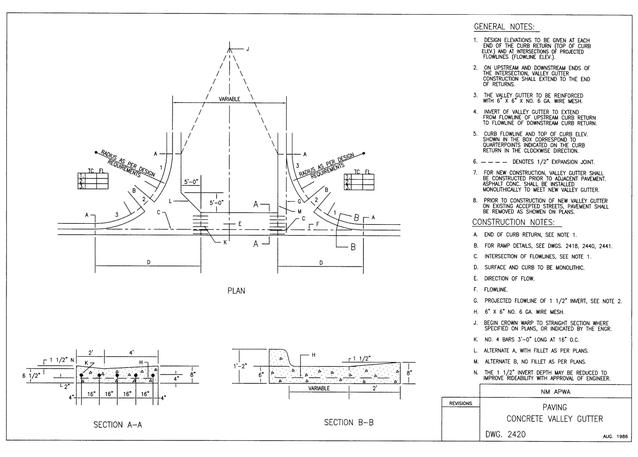


DESIGNED SEG
DRAWN SEG
CHECKED JL
DATE 12.12.2024

COMMUNITY DESIGN SOLUTIONS
9384 Valley View Drive NW, Suite 100
Albuquerque, NM 87114
505.366.4187

REVISION

STAMP

SHELDON E. GREER
NEW MEXICO
17154
LICENSED PROFESSIONAL ENGINEER
10/08/2025

THIS DRAWING IS INCOMPLETE AND NOT TO BE USED FOR CONSTRUCTION UNLESS IT IS STAMPED, SIGNED AND DATED

nm811 Know what's below. Call before you dig.

PROJ. #: 04197.006

PROJECT NAME: PULTE CAJA DEL ORO PHASE 2

SHEET TITLE: STREET & INLET DETAILS

SUBMITTED FOR: CONSTRUCTION

SHEET NUMBER: C-507

NAME: P:\04197 Pulte\04197.006 Pulte Caja del Oro\3. DWG\Sheets\Phase II\C-509 Cattle Guard Detail.dwg PLOT DATE: Dec 12, 2024 - 12:43pm

# WATER BUDGET CALCULATIONS

PHASE 2 LANDSCAPING

YEAR 1 AND YEAR 2
DRIP IRRIGATION TO TREES AND SHRUBS
4 MONTHS AT 1 RUN TIME PER MONTH
4 MONTHS AT 1 RUN TIME PER WEEK
4 MONTHS AT 4 RUN TIMES PER WEEK
APPROX. 90 RUN CYCLES PER YEAR

| | | | | | | | | |
|---|---|---|---|---|---|---|---|---|
| 223 | TREES | = | 1338 | GALLONS PER RUN CYCLE | | | | |
| 334 | SHRUBS | = | 668 | GALLONS PER RUN CYCLE | | | | |
| 2006 | GALLONS PER RUN CYCLE X 90 RUN TIMES | = | 180540 | GPY | / | 0.55 | ACRE FT. | |
| TOTAL WATER USE PER YEAR | | = | 180540.00 | GPY | / | 0.55 | ACRE FT. | |

YEAR 3 AND BEYOND
DRIP IRRIGATION TO TREES AND SHRUBS
4 MONTHS AT 1 RUN TIME PER MONTH
4 MONTHS AT 1 RUN TIME PER WEEK
4 MONTHS AT 3 RUN TIMES PER WEEK
APPROX. 77 RUN CYCLES PER YEAR

| | | | | | | | | |
|---|---|---|---|---|---|---|---|---|
| 223 | TREES | = | 1338 | GALLONS PER RUN CYCLE | | | | |
| 334 | SHRUBS | = | 668 | GALLONS PER RUN CYCLE | | | | |
| 2006 | GALLONS PER RUN CYCLE X .77 RUN TIMES | = | 154462 | GPY | / | 0.47 | ACRE FT. | |
| TOTAL WATER USE PER YEAR | | = | 154462.00 | GPY | / | 0.47 | ACRE FT. | |

NOTE: THIS WATER BUDGET IS APPROXIMATE AND IS TO BE USED AS A GUIDELINE AND ADJUSTED ACCORDING TO SITE CONDITIONS




## IRRIGATION NOTES

1. IRRIGATION SYSTEM STANDARDS OUTLINED IN SECTION 14-8.4(E) OF THE SFCC WATER HARVESTING AND IRRIGATION STANDARDS AND THE CITY OF SANTA FE LANDSCAPE IRRIGATION DESIGN STANDARDS SHALL BE STRICTLY ADHERED TO.
2. IRRIGATION SYSTEM HAS BEEN DESIGNED TO A MINIMUM DYNAMIC PRESSURE OF 75 PSI AT 50 GPM. IF THE PSI/GPM ARE LOWER THAN 75/50 THE LANDSCAPE ARCHITECT MUST BE NOTIFIED IMMEDIATELY.
3. TREES IN TURF AREA TO BE WATERED BY TURF SPRAY IRRIGATION. ALL OTHER NEW PLANTINGS TO BE WATERED BY AUTO DRIP IRRIGATION SYSTEM.
4. WATER MANAGEMENT AND THE MAINTENANCE OF THE IRRIGATION SYSTEM IS THE SOLE RESPONSIBILITY OF THE PROPERTY OWNER.
5. THE IRRIGATION SYSTEM SHALL BE CONNECTED TO CITY WATER. THE POINT OF CONNECTION SHALL CONSIST OF A WATER METER, BACKFLOW PREVENTOR, AND MASTER VALVE.
6. USE SIX 2 GPH EMITTERS PER EACH TREE AND TWO 2 GPH EMITTERS PER EACH SHRUB/GROUNDCOVER. USE SIX 2 GPH DRIP EMITTERS PER TREES IN POTS. IRRIGATION ZONES SHALL BE DESIGNED FOR TREES AND SHRUBS/GROUNDCOVERS.
7. INSTALL SLEEVES TWO SIZES LARGER THAN THE SLEEVED PIPE UNDER ALL HARD SURFACES.
8. THE BACKFLOW SIZE AND LOCATION IS ASSUMED ONLY, BASED ON THE LATEST AVAILABLE UTILITY PLAN. GENERAL CONTRACTOR TO PROVIDE THE IRRIGATION WATER STUB OUT AND ELECTRICITY FOR THE HOTBOX.
9. IRRIGATION EQUIPMENT IS SHOWN ON A LARGER SCALE FOR CLARITY. THE PIPE ROUTING ON THE PLAN IS SCHEMATIC AND MAY REQUIRE FIELD ADJUSTMENTS TO AVOID INSTALLING PIPE WITHIN THE ROOT ZONE OF PLANTS OR IN CONFLICT WITH UTILITY EASEMENTS.
10. ALL SLEEVES ARE ASSUMED TO BE PLACED PRIOR HARDSCAPE WITHOUT THE NEED OF BORING.
11. BACKFILL FOR TRENCHES SHALL BE CLEANED OF ALL ROCK AND DEBRIS.
12. MAINLINE & IRRIGATION EQUIPMENT IS SHOWN SCHEMATICALLY AS PLACED IN THE ROAD OR OUTSIDE OF THE LANDSCAPED AREAS FOR CLARITY ONLY. ALL MAINLINE, & IRRIGATION EQUIPMENT IS TO BE PLACED IN THE LANDSCAPE BEDS.

## VALVE SCHEDULE PH2

| NUMBER | MODEL | SIZE | TYPE | GPM | WATER USE |
|---|---|---|---|---|---|
| 1 | DRIP CONTROL VALVE - SHRUB | 1" | DRIP EMITTER | 4.8 | VL-L |
| 2 | DRIP CONTROL VALVE - TREE | 1" | DRIP EMITTER | 6.4 | L-M |
| 3 | DRIP CONTROL VALVE - SHRUB | 1" | DRIP EMITTER | 3.34 | VL-L |
| 4 | DRIP CONTROL VALVE - TREE | 1" | DRIP EMITTER | 6.6 | L-M |
| 5 | DRIP CONTROL VALVE - TREE | 1" | DRIP EMITTER | 3.8 | L-M |
| 6 | DRIP CONTROL VALVE - SHRUB | 1" | DRIP EMITTER | 4.94 | VL-L |
| 7 | DRIP CONTROL VALVE - TREE | 1" | DRIP EMITTER | 5.6 | L-M |
| 8 | DRIP CONTROL VALVE - TREE | 1" | DRIP EMITTER | 5 | L-M |
| 9 | DRIP CONTROL VALVE - SHRUB | 1" | DRIP EMITTER | 4.74 | VL-L |
| 10 | DRIP CONTROL VALVE - SHRUB | 1" | DRIP EMITTER | 2.8 | VL-L |
| 11 | DRIP CONTROL VALVE - TREE | 1" | DRIP EMITTER | 4.6 | L-M |
| 12 | DRIP CONTROL VALVE - TREE | 1" | DRIP EMITTER | 4.4 | L-M |
| 13 | DRIP CONTROL VALVE - SHRUB | 1" | DRIP EMITTER | 1.67 | VL-L |

## IRRIGATION SCHEDULE PH2

| SYMBOL | MANUFACTURER/MODEL/DESCRIPTION |
|---|---|
| | DRIP CONTROL VALVE - SHRUB<br>RAIN BIRD XCZ-100-PRF, MEDIUM FLOW DRIP CONTROL KIT, 1IN. DV VALVE, 1IN. PRESSURE REGULATING FILTER, 40PSI PRESSURE REGULATOR. 3 GPM-15 GPM. |
| | DRIP CONTROL VALVE - TREE<br>RAIN BIRD XCZ-100-PRF, MEDIUM FLOW DRIP CONTROL KIT, 1IN. DV VALVE, 1IN. PRESSURE REGULATING FILTER, 40PSI PRESSURE REGULATOR. 3 GPM-15 GPM. |
| | TRANSITION FITTING<br>PIPE TRANSITION POINT FROM PVC LATERAL TO DRIP TUBING WITH RISER IN 6IN. DRIP BOX. |
| F | FLUSH CAP<br>NDS CEP900 |
| | DRIP EMITTER - SHRUB<br>(2) RAINBIRD XB-20PC DRIP EMITTERS |
| | DRIP EMITTER - TREE<br>(6) RAINBIRD XB-20PC DRIP EMITTERS |

| SYMBOL | MANUFACTURER/MODEL/DESCRIPTION |
|---|---|
| | MAIN SHUT OFF VALVE<br>SPEARS SCH80 PVC COMPACT BALL VALVE |
| MV | MASTER VALVE 1"<br>RAIN BIRD PEB. 1IN., 1-1/2IN., 2IN. PLASTIC INDUSTRIAL MASTER VALVES. LOW FLOW OPERATING CAPABILITY, GLOBE CONFIGURATION. |
| MV2 | MASTER VALVE 1"<br>RAIN BIRD PEB. 1IN., 1-1/2IN., 2IN. PLASTIC INDUSTRIAL MASTER VALVES. LOW FLOW OPERATING CAPABILITY, GLOBE CONFIGURATION. |
| MV3 | MASTER VALVE 1"<br>RAIN BIRD PEB. 1IN., 1-1/2IN., 2IN. PLASTIC INDUSTRIAL MASTER VALVES. LOW FLOW OPERATING CAPABILITY, GLOBE CONFIGURATION. |
| BF | REDUCED PRESSURE BACKFLOW PREVENTER 1"<br>FEBCO 825Y |
| BF2 | REDUCED PRESSURE BACKFLOW PREVENTER 1"<br>FEBCO 825Y |
| BF3 | REDUCED PRESSURE BACKFLOW PREVENTER 1"<br>FEBCO 825Y |
| C | CONRTOLLER - RAIN BIRD ESP-LXD<br>50-200 STATION, 2-WIRE DECODER BASED CONTROLLER. (1) ESP-LXD 50-STATION, INDOOR/OUTDOOR, PLASTIC WALL-MOUNT ENCLOSURE. SYSTEM REQUIREMENTS: RAIN BIRD FD-XXX-TURF FIELD DECODERS, PAIGE ELECTRIC CABLE P7072D & RAIN BIRD WC20 DRY SPLICES ONLY. GROUND SYSTEM W/ (X) LSP-1TURF LINE SURGE PROTECTORS IN RAIN BIRD ROUND VALVE BOXES. INSTALL PER MANUFACTURERS RECOMMENDATIONS. |
| | IRRIGATION LATERAL LINE: PVC SCHEDULE 40 |
| | IRRIGATION LATERAL LINE: A940 DRIP POLYLINE |
| | IRRIGATION LATERAL LINE: A940RDS DRIP POLYLINE |
| | IRRIGATION MAINLINE: PVC SCHEDULE 40 |
| | PIPE SLEEVE: PVC CLASS 200 SDR 21 |

YELLOWSTONE LANDSCAPE
www.yellowstonelandscape.com
PO Box 10597
Albuquerque, NM 87184
505.898.9615
design@yellowstonelandscape. com

STATE OF NEW MEXICO
CODY McNALLEN
850
REGISTERED LANDSCAPE ARCHITECT
9/3/24

Date: 08.19.2024
Revisions:
09.03.2024

Drawn by: PL
Reviewed by: CM

# CAJA DEL ORO Ph2

Santa Fe, NM

NORTH

Scale: 1" = 60'

30 0 60 120

Sheet Title:
Irrigation Plan

Sheet Number:
LI-00

Z:\Sheets\PA\CC\5502A - TRADERS\ - ACTIVE 2025\Caja del Oro\Ph - CADD\Caja Del Oro_Irrigation Plan_2024.09.03.dwg, 9/3/2024 4:29:13 PM, CWC To PDF.pc3




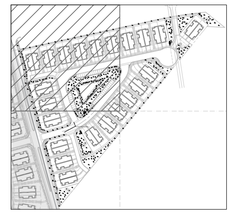

## IRRIGATION SCHEDULE PH2

| SYMBOL | MANUFACTURER/MODEL/DESCRIPTION |
|---|---|
| | DRIP CONTROL VALVE - SHRUB<br>RAIN BIRD XCZ-100-PRF, MEDIUM FLOW DRIP CONTROL KIT, 1IN. DV VALVE, 1IN. PRESSURE REGULATING FILTER, 40PSI PRESSURE REGULATOR. 3 GPM-15 GPM. |
| | DRIP CONTROL VALVE - TREE<br>RAIN BIRD XCZ-100-PRF, MEDIUM FLOW DRIP CONTROL KIT, 1IN. DV VALVE, 1IN. PRESSURE REGULATING FILTER, 40PSI PRESSURE REGULATOR. 3 GPM-15 GPM. |
| | TRANSITION FITTING<br>PIPE TRANSITION POINT FROM PVC LATERAL TO DRIP TUBING WITH RISER IN 6IN. DRIP BOX. |
| F | FLUSH CAP<br>NDS CEP900 |
| | DRIP EMITTER - SHRUB<br>(2) RAINBIRD XB-20PC DRIP EMITTERS |
| | DRIP EMITTER - TREE<br>(6) RAINBIRD XB-20PC DRIP EMITTERS |
| SYMBOL | MANUFACTURER/MODEL/DESCRIPTION |
| | MAIN SHUT OFF VALVE<br>SPEARS SCH80 PVC COMPACT BALL VALVE |
| MV | MASTER VALVE 1"<br>RAIN BIRD PEB. 1IN., 1-1/2IN., 2IN. PLASTIC INDUSTRIAL MASTER VALVES. LOW FLOW OPERATING CAPABILITY, GLOBE CONFIGURATION. |
| MV2 | MASTER VALVE 1"<br>RAIN BIRD PEB. 1IN., 1-1/2IN., 2IN. PLASTIC INDUSTRIAL MASTER VALVES. LOW FLOW OPERATING CAPABILITY, GLOBE CONFIGURATION. |
| MV3 | MASTER VALVE 1"<br>RAIN BIRD PEB. 1IN., 1-1/2IN., 2IN. PLASTIC INDUSTRIAL MASTER VALVES. LOW FLOW OPERATING CAPABILITY, GLOBE CONFIGURATION. |
| BF | REDUCED PRESSURE BACKFLOW PREVENTER 1"<br>FEBCO 825Y |
| BF2 | REDUCED PRESSURE BACKFLOW PREVENTER 1"<br>FEBCO 825Y |
| BF3 | REDUCED PRESSURE BACKFLOW PREVENTER 1"<br>FEBCO 825Y |
| C | CONRTOLLER - RAIN BIRD ESP-LXD<br>50-200 STATION, 2-WIRE DECODER BASED CONTROLLER. (1) ESP-LXD 50-STATION, INDOOR/OUTDOOR, PLASTIC WALL-MOUNT ENCLOSURE. SYSTEM REQUIREMENTS: RAIN BIRD FD-XXX-TURF FIELD DECODERS, PAIGE ELECTRIC CABLE P7072D & RAIN BIRD WC20 DRY SPLICES ONLY. GROUND SYSTEM W/ (X) LSP-1TURF LINE SURGE PROTECTORS IN RAIN BIRD ROUND VALVE BOXES. INSTALL PER MANUFACTURERS RECOMMENDATIONS. |
| | IRRIGATION LATERAL LINE: PVC SCHEDULE 40 |
| | IRRIGATION LATERAL LINE: A940 DRIP POLYLINE |
| | IRRIGATION LATERAL LINE: A940RDS DRIP POLYLINE |
| | IRRIGATION MAINLINE: PVC SCHEDULE 40 |
| | PIPE SLEEVE: PVC CLASS 200 SDR 21 |

YELLOWSTONE LANDSCAPE
www.yellowstonelandscape.com
PO Box 10597
Albuquerque, NM 87184
505.898.9615
design@yellowstonelandscape. com

STATE OF NEW MEXICO
CODY McNALLEN
850
REGISTERED LANDSCAPE ARCHITECT
9/3/24

Date: 08.19.2024
Revisions:
1 09.03.2024
2
3
4
5

Drawn by: PL
Reviewed by: CM

# CAJA DEL ORO Ph2

Santa Fe, NM

NORTH

Scale: 1" = 20'

10 0 20 40

Sheet Title:
Irrigation Plan

Sheet Number:
LI-01

Z:\Shared\PROJECTS\2024\...\Caja Del Oro_Irrigation Plan_2024.08.19.dwg 9/3/2024 4:29:05 PM, DWG To PDF.pc3






## IRRIGATION SCHEDULE PH2

| SYMBOL | MANUFACTURER/MODEL/DESCRIPTION |
|---|---|
| | DRIP CONTROL VALVE - SHRUB<br>RAIN BIRD XCZ-100-PRF, MEDIUM FLOW DRIP CONTROL KIT, 1IN. DV VALVE, 1IN. PRESSURE REGULATING FILTER, 40PSI PRESSURE REGULATOR. 3 GPM-15 GPM. |
| | DRIP CONTROL VALVE - TREE<br>RAIN BIRD XCZ-100-PRF. MEDIUM FLOW DRIP CONTROL KIT, 1IN. DV VALVE, 1IN. PRESSURE REGULATING FILTER, 40PSI PRESSURE REGULATOR. 3 GPM-15 GPM. |
| | TRANSITION FITTING<br>PIPE TRANSITION POINT FROM PVC LATERAL TO DRIP TUBING WITH RISER IN 6IN. DRIP BOX. |
| F | FLUSH CAP<br>NDS CEP900 |
| | DRIP EMITTER - SHRUB<br>(2) RAINBIRD XB-20PC DRIP EMITTERS |
| | DRIP EMITTER - TREE<br>(6) RAINBIRD XB-20PC DRIP EMITTERS |

| SYMBOL | MANUFACTURER/MODEL/DESCRIPTION |
|---|---|
| | MAIN SHUT OFF VALVE<br>SPEARS SCH80 PVC COMPACT BALL VALVE |
| MV | MASTER VALVE 1"<br>RAIN BIRD PEB. 1IN., 1-1/2IN., 2IN. PLASTIC INDUSTRIAL MASTER VALVES. LOW FLOW OPERATING CAPABILITY, GLOBE CONFIGURATION. |
| MV2 | MASTER VALVE 1"<br>RAIN BIRD PEB. 1IN., 1-1/2IN., 2IN. PLASTIC INDUSTRIAL MASTER VALVES. LOW FLOW OPERATING CAPABILITY, GLOBE CONFIGURATION. |
| MV3 | MASTER VALVE 1"<br>RAIN BIRD PEB. 1IN., 1-1/2IN., 2IN. PLASTIC INDUSTRIAL MASTER VALVES. LOW FLOW OPERATING CAPABILITY, GLOBE CONFIGURATION. |
| BF | REDUCED PRESSURE BACKFLOW PREVENTER 1"<br>FEBCO 825Y |
| BF2 | REDUCED PRESSURE BACKFLOW PREVENTER 1"<br>FEBCO 825Y |
| BF3 | REDUCED PRESSURE BACKFLOW PREVENTER 1"<br>FEBCO 825Y |
| C | CONRTOLLER - RAIN BIRD ESP-LXD<br>50-200 STATION, 2-WIRE DECODER BASED CONTROLLER. (1) ESP-LXD 50-STATION, INDOOR/OUTDOOR, PLASTIC WALL-MOUNT ENCLOSURE. SYSTEM REQUIREMENTS: RAIN BIRD FD-XXX-TURF FIELD DECODERS, PAIGE ELECTRIC CABLE P7072D & RAIN BIRD WC20 DRY SPLICES ONLY. GROUND SYSTEM W/ (X) LSP-1TURF LINE SURGE PROTECTORS IN RAIN BIRD ROUND VALVE BOXES. INSTALL PER MANUFACTURERS RECOMMENDATIONS. |

IRRIGATION LATERAL LINE: PVC SCHEDULE 40

IRRIGATION LATERAL LINE: A940 DRIP POLYLINE

IRRIGATION LATERAL LINE: A940RDS DRIP POLYLINE

IRRIGATION MAINLINE: PVC SCHEDULE 40

PIPE SLEEVE: PVC CLASS 200 SDR 21

YELLOWSTONE LANDSCAPE
www.yellowstonelandscape.com
PO Box 10597
Albuquerque, NM 87184
505.898.9615
design@yellowstonelandscape. com

STATE OF NEW MEXICO
CODY McNALLEN
850
REGISTERED LANDSCAPE ARCHITECT
9/3/24

Date: 08.19.2024
Revisions:
09.03.2024

Drawn by: PL
Reviewed by: CM

# CAJA DEL ORO Ph2

Santa Fe, NM

NORTH

Scale: 1" = 20'

10 0 20 40

Sheet Title:
Irrigation Plan

Sheet Number:
LI-02

Z:\Drawings\PROJECTS\SIGN - TRADITIONAL - ACTIVE JOBS\Caja del Oro\Ph 2\Caja del Oro Ph 2 Irrigation Plan_20240819.dwg, 9/3/2024 4:19:23 PM, CMC To PDF.pc3

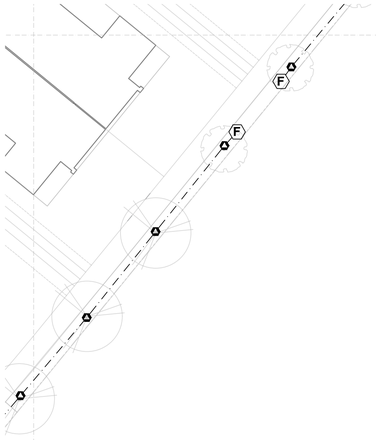


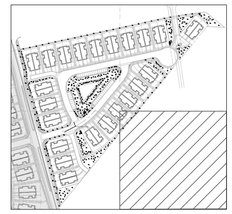

YELLOWSTONE
LANDSCAPE
www.yellowstonelandscape.com
PO Box 10597
Albuquerque, NM 87184
505.898.9615
design@yellowstonelandscape. com

STATE OF NEW MEXICO
CODY McNALLEN
650
REGISTERED
LANDSCAPE ARCHITECT
9/3/24

Date: 08.19.2024
Revisions:
09.03.2024

Drawn by: PL
Reviewed by: CM

## IRRIGATION SCHEDULE PH2

| SYMBOL | MANUFACTURER/MODEL/DESCRIPTION |
|---|---|
| | DRIP CONTROL VALVE - SHRUB<br>RAIN BIRD XCZ-100-PRF, MEDIUM FLOW DRIP CONTROL KIT, 1IN. DV VALVE, 1IN. PRESSURE REGULATING FILTER, 40PSI PRESSURE REGULATOR. 3 GPM-15 GPM. |
| | DRIP CONTROL VALVE - TREE<br>RAIN BIRD XCZ-100-PRF, MEDIUM FLOW DRIP CONTROL KIT, 1IN. DV VALVE, 1IN. PRESSURE REGULATING FILTER, 40PSI PRESSURE REGULATOR. 3 GPM-15 GPM. |
| | TRANSITION FITTING<br>PIPE TRANSITION POINT FROM PVC LATERAL TO DRIP TUBING WITH RISER IN 6IN. DRIP BOX. |
| F | FLUSH CAP<br>NDS CEP900 |
| | DRIP EMITTER - SHRUB<br>(2) RAINBIRD XB-20PC DRIP EMITTERS |
| | DRIP EMITTER - TREE<br>(6) RAINBIRD XB-20PC DRIP EMITTERS |

| SYMBOL | MANUFACTURER/MODEL/DESCRIPTION |
|---|---|
| | MAIN SHUT OFF VALVE<br>SPEARS SCH80 PVC COMPACT BALL VALVE |
| MV | MASTER VALVE 1"<br>RAIN BIRD PEB. 1IN., 1-1/2IN., 2IN. PLASTIC INDUSTRIAL MASTER VALVES. LOW FLOW OPERATING CAPABILITY, GLOBE CONFIGURATION. |
| MV2 | MASTER VALVE 1"<br>RAIN BIRD PEB. 1IN., 1-1/2IN., 2IN. PLASTIC INDUSTRIAL MASTER VALVES. LOW FLOW OPERATING CAPABILITY, GLOBE CONFIGURATION. |
| MV3 | MASTER VALVE 1"<br>RAIN BIRD PEB. 1IN., 1-1/2IN., 2IN. PLASTIC INDUSTRIAL MASTER VALVES. LOW FLOW OPERATING CAPABILITY, GLOBE CONFIGURATION. |
| BF | REDUCED PRESSURE BACKFLOW PREVENTER 1"<br>FEBCO 825Y |
| BF2 | REDUCED PRESSURE BACKFLOW PREVENTER 1"<br>FEBCO 825Y |
| BF3 | REDUCED PRESSURE BACKFLOW PREVENTER 1"<br>FEBCO 825Y |
| C | CONRTOLLER - RAIN BIRD ESP-LXD<br>50-200 STATION, 2-WIRE DECODER BASED CONTROLLER. (1) ESP-LXD 50-STATION, INDOOR/OUTDOOR, PLASTIC WALL-MOUNT ENCLOSURE. SYSTEM REQUIREMENTS: RAIN BIRD FD-XXX-TURF FIELD DECODERS, PAIGE ELECTRIC CABLE P7072D & RAIN BIRD WC20 DRY SPLICES ONLY. GROUND SYSTEM W/ (X) LSP-1TURF LINE SURGE PROTECTORS IN RAIN BIRD ROUND VALVE BOXES. INSTALL PER MANUFACTURERS RECOMMENDATIONS. |
| | IRRIGATION LATERAL LINE: PVC SCHEDULE 40 |
| | IRRIGATION LATERAL LINE: A940 DRIP POLYLINE |
| | IRRIGATION LATERAL LINE: A940RDS DRIP POLYLINE |
| | IRRIGATION MAINLINE: PVC SCHEDULE 40 |
| | PIPE SLEEVE: PVC CLASS 200 SDR 21 |

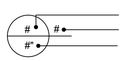


# CAJA DEL ORO
## Ph2
Santa Fe, NM




Scale: 1" = 20'

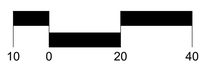


Sheet Title:
Irrigation Plan

Sheet Number:
LI-03




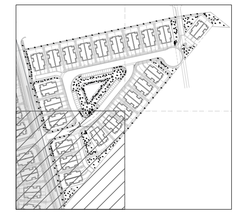

## IRRIGATION SCHEDULE PH2

| SYMBOL | MANUFACTURER/MODEL/DESCRIPTION |
|---|---|
| | DRIP CONTROL VALVE - SHRUB<br>RAIN BIRD XCZ-100-PRF, MEDIUM FLOW DRIP CONTROL KIT, 1IN. DV VALVE, 1IN. PRESSURE REGULATING FILTER, 40PSI PRESSURE REGULATOR. 3 GPM-15 GPM. |
| | DRIP CONTROL VALVE - TREE<br>RAIN BIRD XCZ-100-PRF, MEDIUM FLOW DRIP CONTROL KIT, 1IN. DV VALVE, 1IN. PRESSURE REGULATING FILTER, 40PSI PRESSURE REGULATOR. 3 GPM-15 GPM. |
| | TRANSITION FITTING<br>PIPE TRANSITION POINT FROM PVC LATERAL TO DRIP TUBING WITH RISER IN 6IN. DRIP BOX. |
| F | FLUSH CAP<br>NDS CEP900 |
| | DRIP EMITTER - SHRUB<br>(2) RAINBIRD XB-20PC DRIP EMITTERS |
| | DRIP EMITTER - TREE<br>(6) RAINBIRD XB-20PC DRIP EMITTERS |

| SYMBOL | MANUFACTURER/MODEL/DESCRIPTION |
|---|---|
| | MAIN SHUT OFF VALVE<br>SPEARS SCH80 PVC COMPACT BALL VALVE |
| MV | MASTER VALVE 1"<br>RAIN BIRD PEB. 1IN., 1-1/2IN., 2IN. PLASTIC INDUSTRIAL MASTER VALVES. LOW FLOW OPERATING CAPABILITY, GLOBE CONFIGURATION. |
| MV2 | MASTER VALVE 1"<br>RAIN BIRD PEB. 1IN., 1-1/2IN., 2IN. PLASTIC INDUSTRIAL MASTER VALVES. LOW FLOW OPERATING CAPABILITY, GLOBE CONFIGURATION. |
| MV3 | MASTER VALVE 1"<br>RAIN BIRD PEB. 1IN., 1-1/2IN., 2IN. PLASTIC INDUSTRIAL MASTER VALVES. LOW FLOW OPERATING CAPABILITY, GLOBE CONFIGURATION. |
| BF | REDUCED PRESSURE BACKFLOW PREVENTER 1"<br>FEBCO 825Y |
| BF2 | REDUCED PRESSURE BACKFLOW PREVENTER 1"<br>FEBCO 825Y |
| BF3 | REDUCED PRESSURE BACKFLOW PREVENTER 1"<br>FEBCO 825Y |
| C | CONRTOLLER - RAIN BIRD ESP-LXD<br>50-200 STATION, 2-WIRE DECODER BASED CONTROLLER. (1) ESP-LXD 50-STATION, INDOOR/OUTDOOR, PLASTIC WALL-MOUNT ENCLOSURE. SYSTEM REQUIREMENTS: RAIN BIRD FD-XXX-TURF FIELD DECODERS, PAIGE ELECTRIC CABLE P7072D & RAIN BIRD WC20 DRY SPLICES ONLY. GROUND SYSTEM W/ (X) LSP-1TURF LINE SURGE PROTECTORS IN RAIN BIRD ROUND VALVE BOXES. INSTALL PER MANUFACTURERS RECOMMENDATIONS. |
| | IRRIGATION LATERAL LINE: PVC SCHEDULE 40 |
| | IRRIGATION LATERAL LINE: A940 DRIP POLYLINE |
| | IRRIGATION LATERAL LINE: A940RDS DRIP POLYLINE |
| | IRRIGATION MAINLINE: PVC SCHEDULE 40 |
| | PIPE SLEEVE: PVC CLASS 200 SDR 21 |


YELLOWSTONE LANDSCAPE
www.yellowstonelandscape.com
PO Box 10597
Albuquerque, NM 87184
505.898.9615
design@yellowstonelandscape. com


STATE OF NEW MEXICO
CODY McNALLEN
650
REGISTERED LANDSCAPE ARCHITECT
9/3/24

Date: 08.19.2024
Revisions:
09.03.2024

Drawn by: PL
Reviewed by: CM

# CAJA DEL ORO Ph2

Santa Fe, NM

NORTH

Scale: 1" = 20'

10 0 20 40

Sheet Title:
Irrigation Plan

Sheet Number:
LI-04

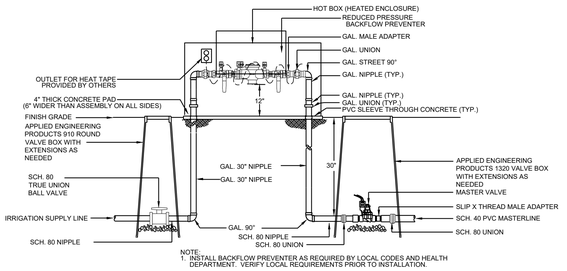


## 1 RP BACKFLOW/MASTER VALVE DETAIL

N.T.S.

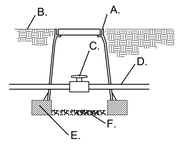


A. APPLIED ENGINEERING PRODUCTS 910 ROUND VALVE BOX WITH EXTENSIONS AS NEEDED
B. FINISH GRADE
C. SCH. 80 UTILITY BALL VALVE
D. MAINLINE/24" BURY
E. 8" X 8" X 16" CMU CONCRETE BLOCK
F. 4" LAYER OF 3/4" GRAVEL

## 2 MAINLINE ISOLATION VALVE DETAIL

N.T.S.

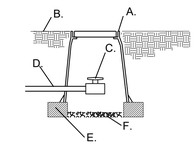


A. APPLIED ENGINEERING PRODUCTS 910 ROUND VALVE BOX WITH EXTENSIONS AS NEEDED
B. FINISH GRADE
C. SCH. 80 UTILITY BALL VALVE
D. MAINLINE/24" BURY
E. 8" X 8" X 16" CMU CONCRETE BLOCK
F. 3/4" GRAVEL SUMP UNDER MANUAL DRAIN TO BE A MINIMUM OF 12" DEEP

## 3 MANUAL DRAIN VALVE DETAIL

N.T.S.

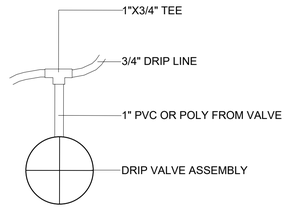


## 4 DRIP VALVE DETAIL

N.T.S.

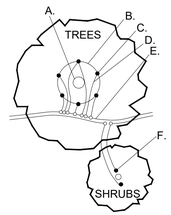


A. TREE TRUNK/ ROOT CROWN
B. 24" CIRCLE FROM TRUNK
C. EMITTERS
D. 1/4" DISTRIBUTION LINE
E. 3/4" POLYETHYLENE DRIPLINE
F. EMITTER PLACED AT THE EDGE OF THE ROOT BALL

NOTE: INSTALL EMITTERS ABOVE THE ROOT BALL IF PLANT IS INSTALLED ON A SLOPE.

## 5 EMITTER PLACEMENT DETAIL

N.T.S.

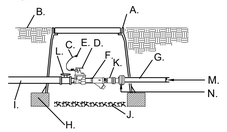


A. APPLIED ENGINEERING PRODUCTS 1320 VALVE BOX WITH EXTENSIONS AS NEEDED
B. FINISH GRADE
C. 24" WIRE LOOP
D. AUTOMATIC VALVE SEE IRRIGATION LEGEND.
E. DRY SPLICE CONNECTOR OR EQUAL
F. "WYE" STRAINER STRAINER SHALL BE INSTALLED TO PROVIDE ACCESS FOR MAINTENANCE AND REPLACEMENT OF FILTER
G. LATERAL LINE/24" BURY
H. 8" X 8" X 16" CMU CONCRETE BLOCK
I. MASTERLINE/24" BURY
J. 4" LAYER OF 3/4" GRAVEL
K. PRESSURE REGULATOR
L. SCH. 80 TRUE UNION BALL VALVE
M. SCH. 40 PVC LATERAL LINE
N. SCH. 80 UNION

## 6 DRIP VALVE WITH FILTER & PRESSURE REGULATOR

N.T.S.

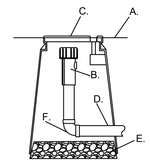


A. FINISH GRADE
B. END FLUSH CAP
C. 6" ROUND BOX WITH LID
D. 3/4" POLY DRIP PIPE
E. 2" DEPTH OF GRAVEL
F. 90° FITTING

## 7 END FLUSH CAP

N.T.S.

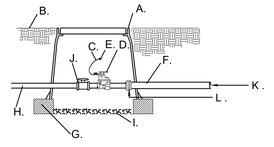


A. APPLIED ENGINEERING PRODUCTS 1320 VALVE BOX WITH EXTENSIONS AS NEEDED
B. FINISH GRADE
C. 24" WIRE LOOP
D. AUTOMATIC VALVE- SEE IRRIGATION LEGEND.
E. DRY SPLICE CONNECTOR OR EQUAL
F. LATERAL LINE/24" BURY
G. 8" X 8" X 16" CMU CONCRETE BLOCK
H. MASTERLINE/24" BURY
I. 4" LAYER OF 3/4" GRAVEL
J. SCH. 80 TRUE UNION BALL VALVE
K. SCH. 40 PVC LATERAL LINE
L. SCH. 80 UNION

## 8 AUTOMATIC VALVE

N.T.S.

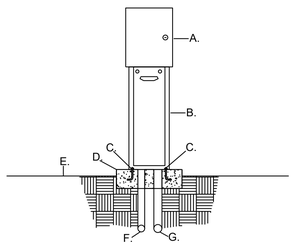


A. AUTOMATIC CONTROLLER, SEE IRRIGATION LEGEND
B. PEDESTAL (SAME AS CONTROLLER MANUFACTURER)
C. 1/2' X 6" ANCHOR BOLTS, FOUR PER PEDESTAL
D. 3000 PSI CONCRETE PAD - 18" X 24" X 8" THICK
E. FINISH GRADE
F. 3/4" RIGID PVC SWEEP ELL (120 VOLT WIRE)
G. 2" RIGID PVC SWEEP ELL (24 VOLT WIRE)

## 9 AUTOMATIC CONTROLLER

N.T.S.

## IRRIGATION NOTES

1. IRRIGATION SYSTEM STANDARDS OUTLINED IN SECTION 14-8.4(E) OF THE SFCC WATER HARVESTING AND IRRIGATION STANDARDS AND THE CITY OF SANTA FE LANDSCAPE IRRIGATION DESIGN STANDARDS SHALL BE STRICTLY ADHERED TO.
2. IRRIGATION SYSTEM HAS BEEN DESIGNED TO A MINIMUM DYNAMIC PRESSURE OF 75 PSI AT 50 GPM. IF THE PSI/GPM ARE LOWER THAN 75/50 THE LANDSCAPE ARCHITECT MUST BE NOTIFIED IMMEDIATELY.
3. TREES IN TURF AREA TO BE WATERED BY TURF SPRAY IRRIGATION. ALL OTHER NEW PLANTINGS TO BE WATERED BY AUTO DRIP IRRIGATION SYSTEM.
4. WATER MANAGEMENT AND THE MAINTENANCE OF THE IRRIGATION SYSTEM IS THE SOLE RESPONSIBILITY OF THE PROPERTY OWNER.
5. THE IRRIGATION SYSTEM SHALL BE CONNECTED TO CITY WATER. THE POINT OF CONNECTION SHALL CONSIST OF A WATER METER, BACKFLOW PREVENTOR, AND MASTER VALVE.
6. USE SIX 2 GPH EMITTERS PER EACH TREE AND TWO 2 GPH EMITTERS PER EACH SHRUB/GROUNDCOVER. USE SIX 2 GPH DRIP EMITTERS PER TREES IN POTS. IRRIGATION ZONES SHALL BE DESIGNED FOR TREES AND SHRUBS/GROUNDCOVERS.
7. INSTALL SLEEVES TWO SIZES LARGER THAN THE SLEEVED PIPE UNDER ALL HARD SURFACES.
8. THE BACKFLOW SIZE AND LOCATION IS ASSUMED ONLY, BASED ON THE LATEST AVAILABLE UTILITY PLAN. GENERAL CONTRACTOR TO PROVIDE THE IRRIGATION WATER STUB OUT AND ELECTRICITY FOR THE HOTBOX.
9. IRRIGATION EQUIPMENT IS SHOWN ON A LARGER SCALE FOR CLARITY. THE PIPE ROUTING ON THE PLAN IS SCHEMATIC AND MAY REQUIRE FIELD ADJUSTMENTS TO AVOID INSTALLING PIPE WITHIN THE ROOT ZONE OF PLANTS OR IN CONFLICT WITH UTILITY EASEMENTS.
10. ALL SLEEVES ARE ASSUMED TO BE PLACED PRIOR HARDSCAPE WITHOUT THE NEED OF BORING.
11. BACKFILL FOR TRENCHES SHALL BE CLEANED OF ALL ROCK AND DEBRIS.
12. MAINLINE & IRRIGATION EQUIPMENT IS SHOWN SCHEMATICALLY AS PLACED IN THE ROAD OR OUTSIDE OF THE LANDSCAPED AREAS FOR CLARITY ONLY. ALL MAINLINE, & IRRIGATION EQUIPMENT IS TO BE PLACED IN THE LANDSCAPE BEDS.

## WATER BUDGET CALCULATIONS

PHASE 2 LANDSCAPING

YEAR 1 AND YEAR 2
DRIP IRRIGATION TO TREES AND SHRUBS
4 MONTHS AT 1 RUN TIME PER MONTH
4 MONTHS AT 1 RUN TIME PER WEEK
4 MONTHS AT 4 RUN TIMES PER WEEK
APPROX. 90 RUN CYCLES PER YEAR
223 TREES = 1338 GALLONS PER RUN CYCLE
334 SHRUBS = 668 GALLONS PER RUN CYCLE
2006 GALLONS PER RUN CYCLE X 90 RUN TIMES = 180540 GPY / 0.55 ACRE FT.
TOTAL WATER USE PER YEAR = 180540.00 GPY / 0.55 ACRE FT.

YEAR 3 AND BEYOND
DRIP IRRIGATION TO TREES AND SHRUBS
4 MONTHS AT 1 RUN TIME PER MONTH
4 MONTHS AT 1 RUN TIME PER WEEK
4 MONTHS AT 3 RUN TIMES PER WEEK
APPROX. 77 RUN CYCLES PER YEAR
223 TREES = 1338 GALLONS PER RUN CYCLE
334 SHRUBS = 668 GALLONS PER RUN CYCLE
2006 GALLONS PER RUN CYCLE X .77 RUN TIMES = 154462 GPY / 0.47 ACRE FT.
TOTAL WATER USE PER YEAR = 154462.00 GPY / 0.47 ACRE FT.

NOTE: THIS WATER BUDGET IS APPROXIMATE AND IS TO BE USED AS A GUIDELINE AND ADJUSTED ACCORDING TO SITE CONDITIONS

## VALVE SCHEDULE PH2

| NUMBER | MODEL | SIZE | TYPE | GPM | WATER USE |
|---|---|---|---|---|---|
| 1 | DRIP CONTROL VALVE - SHRUB | 1" | DRIP EMITTER | 4.8 | VL-L |
| 2 | DRIP CONTROL VALVE - TREE | 1" | DRIP EMITTER | 6.4 | L-M |
| 3 | DRIP CONTROL VALVE - SHRUB | 1" | DRIP EMITTER | 3.34 | VL-L |
| 4 | DRIP CONTROL VALVE - TREE | 1" | DRIP EMITTER | 6.6 | L-M |
| 5 | DRIP CONTROL VALVE - TREE | 1" | DRIP EMITTER | 3.8 | L-M |
| 6 | DRIP CONTROL VALVE - SHRUB | 1" | DRIP EMITTER | 4.94 | VL-L |
| 7 | DRIP CONTROL VALVE - TREE | 1" | DRIP EMITTER | 5.6 | L-M |
| 8 | DRIP CONTROL VALVE - TREE | 1" | DRIP EMITTER | 5 | L-M |
| 9 | DRIP CONTROL VALVE - SHRUB | 1" | DRIP EMITTER | 4.74 | VL-L |
| 10 | DRIP CONTROL VALVE - SHRUB | 1" | DRIP EMITTER | 2.8 | VL-L |
| 11 | DRIP CONTROL VALVE - TREE | 1" | DRIP EMITTER | 4.6 | L-M |
| 12 | DRIP CONTROL VALVE - TREE | 1" | DRIP EMITTER | 4.4 | L-M |
| 13 | DRIP CONTROL VALVE - SHRUB | 1" | DRIP EMITTER | 1.67 | VL-L |

YELLOWSTONE LANDSCAPE
www.yellowstonelandscape.com
PO Box 10597
Albuquerque, NM 87184
505.898.9615
design@yellowstonelandscape. com

STATE OF NEW MEXICO CODY McNALLEN 850 REGISTERED LANDSCAPE ARCHITECT 9/3/24

Date: 08.19.2024
Revisions:
1 09.03.2024
2
3
4
5

Drawn by: PL
Reviewed by: CM

CAJA DEL ORO Ph2
Santa Fe, NM

NORTH

Scale:

0

Sheet Title:
Irrigation Details

Sheet Number:
LI-05

Z:\Sheet\PAS\CXE0024 - TRANSFER\ - ACTIVE (DEC).dgn dan.Chorchi - CADD.Cja Del Oro_Irrigation Plan_(20240813).dwg 9/3/2024 4:43:19 PM, DWG To PDF.pc3

## WATER BUDGET CALCULATIONS

PHASE 2 LANDSCAPING

YEAR 1 AND YEAR 2
DRIP IRRIGATION TO TREES AND SHRUBS
4 MONTHS AT 1 RUN TIME PER MONTH
4 MONTHS AT 1 RUN TIME PER WEEK
4 MONTHS AT 4 RUN TIMES PER WEEK
APPROX. 90 RUN CYCLES PER YEAR

| | | | | | | | |
|---|---|---|---|---|---|---|---|
| 223 | TREES | = | 1338 | GALLONS PER RUN CYCLE | | | |
| 334 | SHRUBS | = | 668 | GALLONS PER RUN CYCLE | | | |
| 2006 | GALLONS PER RUN CYCLE X 90 RUN TIMES | = | 180540 | GPY | / | 0.55 | ACRE FT. |
| TOTAL WATER USE PER YEAR | | = | 180540.00 | GPY | / | 0.55 | ACRE FT. |

YEAR 3 AND BEYOND
DRIP IRRIGATION TO TREES AND SHRUBS
4 MONTHS AT 1 RUN TIME PER MONTH
4 MONTHS AT 1 RUN TIME PER WEEK
4 MONTHS AT 3 RUN TIMES PER WEEK
APPROX. 77 RUN CYCLES PER YEAR

| | | | | | | | |
|---|---|---|---|---|---|---|---|
| 223 | TREES | = | 1338 | GALLONS PER RUN CYCLE | | | |
| 334 | SHRUBS | = | 668 | GALLONS PER RUN CYCLE | | | |
| 2006 | GALLONS PER RUN CYCLE X .77 RUN TIMES | = | 154462 | GPY | / | 0.47 | ACRE FT. |
| TOTAL WATER USE PER YEAR | | = | 154462.00 | GPY | / | 0.47 | ACRE FT. |

NOTE: THIS WATER BUDGET IS APPROXIMATE AND IS TO BE USED AS A GUIDELINE AND ADJUSTED ACCORDING TO SITE CONDITIONS







1 WATER LEVEL MEASURING DEVICE NTS

## LANDSCAPE NOTES

1. PLANTING AREAS TO BE MULCHED WITH GRAVEL AT 2-3" OVER FILTER FABRIC.
2. ALL MULCH TO BE 2" BELOW ADJACENT SIDEWALK OR CURB.
3. PLANTS TO BE IRRIGATED WITH AUTOMATIC DRIP IRRIGATION SYSTEM PROTECTED WITH BACKFLOW PREVENTION DEVICE (SEE DETAILS).
4. EXISTING LANDSCAPE AREAS OUTSIDE PROJECT AREA TO BE PROTECTED DURING CONSTRUCTION.
5. STREET TREES PROVIDED AT APPROX. 30' ON CENTER.
6. PROPOSED COOL SEASON SOD AREA WILL BE FOR RECREATIONAL USE. SOD USED WILL BE THE SIEMPRE VERDE FESCUE MIX FROM EVERGREEN TRUF.
7. PLANTS LOCATED IN BOTTOM THIRD OF POND AREAS ARE ADAPTED TO PERIODS OF INUNDATION.
8. NO OBJECTS, WALLS, FENCES, PARKED VEHICLES OR VEGETATION SHALL BE PLACED WITHIN CLEAR-SIGHT TRIANGLES BETWEEN 3' AND 6' HEIGHT.
9. STREET TREES WILL BE INSTALLED SO AS TO NOT OBSTRUCT STREET SIGNS.
10. STREET TREES TO BE LOCATED/ADJUSTED TO BE A MINIMUM OF 15' FROM STREET LIGHT STANDARDS AND FIRE HYDRANTS PER ZONING SECTION 14-8.4(G)(3)(e)(f).
11. ALL PROJECT STREET TREES SHALL BE IRRIGATED AND MAINTAINED BY THE DEVELOPER.
12. THIS LANDSCAPE PLAN COMPLIES WITH CITY OF SANTA FE ORDINANCE 14-8.4 LANDSCAPE AND SITE DESIGN.
13. THIS PLAN INCORPORATES PASSIVE WATER HARVESTING TECHNIQUES FOR LANDSCAPE IRRIGATION WHEREVER MADE POSSIBLE BY THE GRADING AND DRAINAGE PLAN. DETENTION AND RETENTION PONDS ARE INTENDED AS INTEGRATED LANDSCAPE FEATURES RATHER THAN SINGLE USE FLOOD CONTROL FEATURES.
14. TURF GRASS SOD OR TURF GRASS SEED MIXES CONTAIN NO MORE THAN TWENTY-FIVE PERCENT KENTUCKY BLUEGRASS PER 14-8.4(F)(3)(A) .
15. TRANSITION LINE BETWEEN EXCAVATION AND NATIVE SOIL SHALL BE SMOOTHLY RAKED, CREATING A CLEAN CONSISTENT GRADE.
16. ALL PLANTS SHALL BE COVERED BY A 1-YEAR WARRANTY FROM POINT OF SUBSTANTIAL COMPLETION, PROVIDED THAT PROPER MAINTENANCE HAS BEEN PERFORMED ON LANDSCAPE.
17. ALL DISTURBED AREAS DUE TO CONSTRUCTION AND NOT PART OF THE LANDSCAPE PLAN SHALL BE REVEGETATED AND IRRIGATED INCLUDING SPOIL PILES AND STOCK PILES OF ANY MATERIAL. GRASS SEED MIX SHALL BE DRYLAND BLEND NATIVE GRASS MIXTURE FROM PLANTS OF THE SOUTHWEST OR EQUAL. SEED RATE WILL BE 2 LBS. PER 1,000 SF.
18. EXISTING GRADE BELOW NATIVE TREES AND SHRUBS SHALL REMAIN UNDISTURBED THROUGHOUT THE DRIPLINE OF THE PLANT MATERIAL. NO MOUNDING OF SOIL, FILL DIRT, ORGANIC OR INORGANIC DEBRIS SHALL BE ABANDONED UNDER NATIVE PLANT MATERIAL CANOPIES.
19. AREAS OF NATURAL GRAVEL, COBBLE, FRACTURED STONE, AND/OR BOULDER FIELDS SHALL BE RESTORED TO THE NATURAL STATE THAT EXISTED PRIOR TO CONSTRUCTION. GRADE OUT ANY DAMAGE TO THE NATURAL TERRAIN PRIOR TO THE RE-APPLICATION OF NATIVE STONE MATERIAL.
20. PER 14-8.4(E)(4)(g) PLANTING BEDS SHALL BE SWALED, SLOPED OR RECESSED BELOW GRADE TO PREVENT FUGITIVE WATER BY GRADING CONTRACTOR.
21. A SECURITY FENCE AROUND PONDS THREE FEET AND DEEPER WITH A MAINTENANCE GATE WILL BE INSTALLED.
22. THE GRAVEL MULCH IS WASHED & SCREENED PRIOR TO INSTALLATION.
23. 14-8.4(J)(1) WALL AND FENCES: FOR ANY PROJECT TO WHICH THIS SUBSECTION 14-8.4(J) APPLIES, PUBLICLY VISIBLE WALLS AND FENCES SHALL BE WROUGHT IRON OR SIMULATED WROUGHT IRON, WOOD OR SIMULATED WOOD, CEDAR POLE, ADOBE, SPLIT-FACED CONCRETE BLOCK, STONE, STUCCOED OR RECTANGULAR MESH WIRE ON WOODEN POSTS IN COMBINATION WITH VINES OR OTHER CLIMBING PLANT MATERIAL.
24. RETAINING WALL / FENCE: 14-8.4(J)(2)(b)(i) ANY WALL OR FENCE THAT IS MORE THAN THREE(3) FEET INHEIGHT ABOVE FINISHED GRADE ON THE SIDE FACING THE STREET, SHALL BE SET BACK FROM THE STREET RIGHT OF WAY LINE A DISTANCE EQUAL TO OR GREATER THAT THE HEIGHT.
25. 14-8.4(J)(2)(b)(ii) THE SETBACK AREA REQUIRED BY SUBSECTION (b)(ii) SHALL BE LANDSCAPED WITH PLANT MATERIAL THAT CONSISTS OF PREDOMINANTLY THORNY OR OTHER BARRIER PLANTINGS THAT WILL COVER A MINIMUM OF SEVENTY-FIVE PERCENT OF THE GROUND AREA OF THE PLANTER AND THAT WILL SCREEN A MINIMUM OF SEVENTY-FIVE PERCENT OF THE FACE OF THE FENCE OR WALL AT MATURITY.
26. AN IRRIGATION PLAN WILL BE PROVIDED PRIOR TO PERMIT REVIEW.
27. A SAFETY INSPECTION BY AN INDEPENDENT CONTRACTOR IS REQUIRED FOR THE PLAY EQUIPMENT.
28. LANDSCAPING IN FRONT OF EACH LOT TO BE INSTALLED WHEN THE HOME FRONT YARD IS INSTALLED.
29. STREET TREE IRRIGATION WILL BE PROVIDED AT EACH LOT.

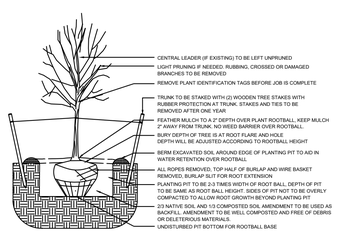


1 TREE PLANTING DETAIL N.T.S.

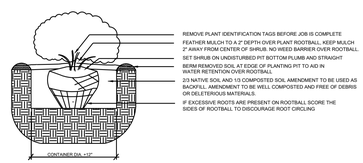


2 SHRUB PLANTING DETAIL N.T.S.

## SIGNIFICANT TREES

58 SIGNIFICANT TREES EXISTING ON SITE (DECIDUOUS TREES 6"+ DBH OR 8' OR TALLER FOR EVERGREEN TREES)

00 SIGNIFICANT TREES TO REMAIN
58 SIGNIFICANT TREES TO BE REMOVED

58 TOTAL MINIMUM NUMBER OF TREES REQUIRED ON SITE (EQUAL TO TOTAL SIGNIFICANT TREES EXISTING ON SITE)
226 TOTAL NUMBER OF TREES PROVIDED ON SITE

* TREES CLASSIFIED BY NMDA AS NOXIOUS WEEDS THAT ARE SMALLER THAN 12" CALIPER ARE EXEMPT FROM THIS REVIEW INCLUDING RUSSIAN OLIVE, SIBERIAN ELM, TREE OF HEAVEN AND SALT CEDAR.
* DURING CONSTRUCTION, EXISTING PLANT MATERIAL TO BE PRESERVED SHALL BE ENCLOSED BY A TEMPORARY FENCE AT LEAST (5) FEET OUTSIDE THE DRIPLINE. NO VEHICLE PARKING, MATERIAL STORAGE OR STOCKPILING SHALL OCCUR WITHIN THE ENCLOSED AREA AT ANY TIME, FOR ANY REASON.
* DESTROYED VEGETATION SHALL BE REMOVED PROMPTLY TO PREVENT INSECT INFESTATION OF HEALTHY VEGETATION.
* THE PRESERVATION OF PLANT SPECIES CLASSIFIED AS NOXIOUS WEEDS IS DISCOURAGED.

## LANDSCAPE DATA

| | | | | REQUIRED | PROVIDED |
|---|---|---|---|---|---|
| AREAS (SF) | | | | | |
| | OPEN SPACE | | | - | 59,699 |
| | PONDING AREA | | | - | 7,646 |
| PLANTING | | | | REQUIRED | PROVIDED |
| | TREE | OPEN SPACE | ONE TREE PER 500 SF OF REQUIRED OPEN SPACE | 120 | 120 |
| | | | MINIMUM 25% EVERGREEN | 31 | 31 |
| | | PONDING AREA | ONE TREE PER 500 SF OF PONDING AREA | 16 | 16 |
| | | | MINIMUM 25% EVERGREEN REQUIRED/PROVIDED | 5 | 8 |
| | SHRUB | OPEN SPACE | TWO SHRUBS PER 500 SF OF REQUIRED OPEN SPACE | 239 | 239 |
| | | | MINIMUM 25% EVERGREEN | 60 | 108 |
| | | PONDING AREA | THREE SHRUBS PER 500 SF OF PONDING AREA | 46 | 46 |
| | | | MINIMUM 25% EVERGREEN REQUIRED/PROVIDED | 12 | 27 |
| STREET TREE | | | | REQUIRED | PROVIDED |
| | ONE TREE PER 30 LF ON AVERAGE | | | - | - |
| | | 2,601 | LF | 87 | 87 |
| SCREENING SHRUBS REQUIRED ALONG THE MAIN STREET | | | | REQUIRED | PROVIDED |
| | | | | 49 | 49 |
| TOTALS | | | | REQUIRED | PROVIDED |
| | TREES | | 2" CAL OR 6' HT. | 223 | 223 |
| | SHRUBS | | 5 GAL | 334 | 334 |

## MATERIAL SCHEDULE PH2

| SYMBOL | DESCRIPTION | QTY |
|---|---|---|
| | LARGE BOULDER | 29 |
| | ANOVA RALLY 32 GALLON TRASH RECEPTACLE, D6004 | 6 |
| | ANOVA COMPLETE PET STATION DISPENSER W/ LID, BAGS & SIGN & POST KDP1003 | 7 |
| | 3/4" WALLIN GRAVEL 2" DEPTH W/ FILTER FABRIC | 53,984 SF |
| | 3/4" GRAY CRUSHED GRAVEL 2" DEPTH W/ FILTER FABRIC | 5,715 SF |
| | 2" - 4" WALLIN ANGULAR COBBLE GRAVEL 4" DEPTH W/ FILTER FABRIC | 7,646 SF |

## PLANT SCHEDULE PH2

| SYMBOL | QTY | BOTANICAL / COMMON NAME | SIZE | WATER |
|---|---|---|---|---|
| DECIDUOUS TREES | | | | |
| | 17 | ACER NEGUNDO `SENSATION` SENSATION BOX ELDER MAPLE | 2" B&B | L-M |
| | 45 | MALUS X `SPRING SNOW` SPRING SNOW CRABAPPLE | 2" B&B | L-M |
| | 47 | PYRUS CALLERYANA `CLEVELAND SELECT` CLEVELAND SELECT PEAR | 2" B&B | L-M |
| | 2 | QUERCUS BUCKLEYI BUCKLEY OAK | 2" B&B | L-M |
| | 34 | ULMUS PROPINQUA `EMERALD SUNSHINE` EMERALD SUNSHINE ELM | 2" B&B | L-M |
| | 39 | ULMUS X `FRONTIER` FRONTIER ELM | 2" B&B | L-M |
| EVERGREEN TREES | | | | |
| | 9 | CEDRUS ATLANTICA ATLAS CEDAR | 6` | L-M |
| | 9 | PINUS LEUCODERMIS BOSNIAN PINE | 6` | L-M |
| | 21 | PINUS NIGRA AUSTRIAN BLACK PINE | 6` | L-M |
| DECIDUOUS SHRUBS | | | | |
| | 24 | ARTEMISIA FILIFOLIA SAND SAGEBRUSH | 5 GAL | VL-L |
| | 31 | FALLUGIA PARADOXA APACHE PLUME | 5 GAL | VL-L |
| | 48 | RHUS TRILOBATA THREE LEAF SUMAC | 5 GAL | VL-L |
| | 51 | ROSA WOODSII MOUNTAIN ROSE | 5 GAL | VL-L |
| EVERGREEN SHRUBS | | | | |
| | 30 | AGAVE PARRYI PARRY`S AGAVE | 5 GAL | VL-L |
| | 18 | CERCOCARPUS LEDIFOLIUS CURL-LEAF MOUNTAIN MAHOGANY | 5 GAL | VL-L |
| | 51 | ERICAMERIA LARICIFOLIA AGUIRRE AGUIRRE TURPENTINE BUSH | 5 GAL | VL-L |
| | 55 | MAHONIA REPENS CREEPING MAHONIA | 5 GAL | VL-L |
| VINE/ESPALIER | | | | |
| | 26 | PARTHENOCISSUS QUINQUEFOLIA VIRGINA CREEPER | 5 GAL | VL-L |


YELLOWSTONE LANDSCAPE
www.yellowstonelandscape.com
PO Box 10597
Albuquerque, NM 87184
505.898.9615
design@yellowstonelandscape. com


STATE OF NEW MEXICO — CODY MCNALLEN 850 — REGISTERED LANDSCAPE ARCHITECT — 12/10/24

Date: 08.19.2024
Revisions:
09.03.2024
12.10.2024

Drawn by: PL
Reviewed by: CM

# CAJA DEL ORO Ph2

Santa Fe, NM

NORTH

Scale: 1" = 60'

30 0 60 120

Sheet Title: Landscape Plan

Sheet Number: LP-00

Z:\Drawn\PROJECTS\2024\24-... PHASE II\BTP_CDO\Cajo del Oro\Ph... CAD\Cajo Del Oro_Landscape Plan_2024.12.10.dwg 12/10/2024 9:21:24 AM, DWG To PDF.pc3




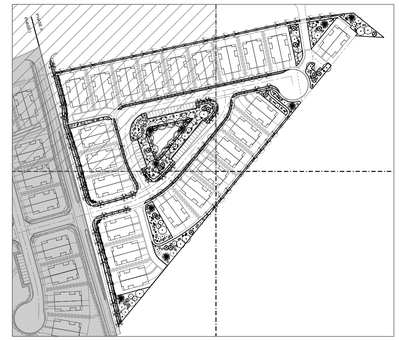

## PLANT SCHEDULE PH2

| SYMBOL | QTY | BOTANICAL / COMMON NAME | SIZE | WATER |
|---|---|---|---|---|
| **DECIDUOUS TREES** | | | | |
| | 17 | ACER NEGUNDO `SENSATION`<br>SENSATION BOX ELDER MAPLE | 2" B&B | L-M |
| | 45 | MALUS X `SPRING SNOW`<br>SPRING SNOW CRABAPPLE | 2" B&B | L-M |
| | 47 | PYRUS CALLERYANA `CLEVELAND SELECT`<br>CLEVELAND SELECT PEAR | 2" B&B | L-M |
| | 2 | QUERCUS BUCKLEYI<br>BUCKLEY OAK | 2" B&B | L-M |
| | 34 | ULMUS PROPINQUA `EMERALD SUNSHINE`<br>EMERALD SUNSHINE ELM | 2" B&B | L-M |
| | 39 | ULMUS X `FRONTIER`<br>FRONTIER ELM | 2" B&B | L-M |
| **EVERGREEN TREES** | | | | |
| | 9 | CEDRUS ATLANTICA<br>ATLAS CEDAR | 6` | L-M |
| | 9 | PINUS LEUCODERMIS<br>BOSNIAN PINE | 6` | L-M |
| | 21 | PINUS NIGRA<br>AUSTRIAN BLACK PINE | 6` | L-M |
| **DECIDUOUS SHRUBS** | | | | |
| | 24 | ARTEMISIA FILIFOLIA<br>SAND SAGEBRUSH | 5 GAL | VL-L |
| | 31 | FALLUGIA PARADOXA<br>APACHE PLUME | 5 GAL | VL-L |
| | 48 | RHUS TRILOBATA<br>THREE LEAF SUMAC | 5 GAL | VL-L |
| | 51 | ROSA WOODSII<br>MOUNTAIN ROSE | 5 GAL | VL-L |
| **EVERGREEN SHRUBS** | | | | |
| | 30 | AGAVE PARRYI<br>PARRY`S AGAVE | 5 GAL | VL-L |
| | 18 | CERCOCARPUS LEDIFOLIUS<br>CURL-LEAF MOUNTAIN MAHOGANY | 5 GAL | VL-L |
| | 51 | ERICAMERIA LARICIFOLIA AGUIRRE<br>AGUIRRE TURPENTINE BUSH | 5 GAL | VL-L |
| | 55 | MAHONIA REPENS<br>CREEPING MAHONIA | 5 GAL | VL-L |
| **VINE/ESPALIER** | | | | |
| | 26 | PARTHENOCISSUS QUINQUEFOLIA<br>VIRGINA CREEPER | 5 GAL | VL-L |

## MATERIAL SCHEDULE PH2

| SYMBOL | DESCRIPTION | QTY |
|---|---|---|
| | LARGE BOULDER | 29 |
| | ANOVA RALLY 32 GALLON TRASH RECEPTACLE, D6004 | 6 |
| | ANOVA COMPLETE PET STATION DISPENSER W/ LID, BAGS & SIGN & POST KDP1003 | 7 |
| | 3/4" WALLIN GRAVEL<br>2" DEPTH W/ FILTER FABRIC | 53,984 SF |
| | 3/4" GRAY CRUSHED GRAVEL<br>2" DEPTH W/ FILTER FABRIC | 5,715 SF |
| | 2" - 4" WALLIN ANGULAR COBBLE GRAVEL<br>4" DEPTH W/ FILTER FABRIC | 7,646 SF |

YELLOWSTONE LANDSCAPE
www.yellowstonelandscape.com
PO Box 10597
Albuquerque, NM 87184
505.898.9615
design@yellowstonelandscape. com

STATE OF NEW MEXICO
CODY McNALLEN
850
REGISTERED LANDSCAPE ARCHITECT
9/3/24

Date: 08.19.2024
Revisions:
- 09.03.2024
-
-
-
-

Drawn by: PL
Reviewed by: CM

# CAJA DEL ORO Ph2

Santa Fe, NM

NORTH

Scale: 1" = 20'

10 0 20 40

Sheet Title:
Landscape Plan

Sheet Number:
LP-01

Z:\Drawings\PROJECTS\SIGN - TRADITIONAL - ACTIVE JOBS\Caja del Oro\Ph - CAD\Caja Del Oro_Landscape Plan_20140103.dwg 5/1/2024 4:08:07 PM, DWG To PDF.pc3

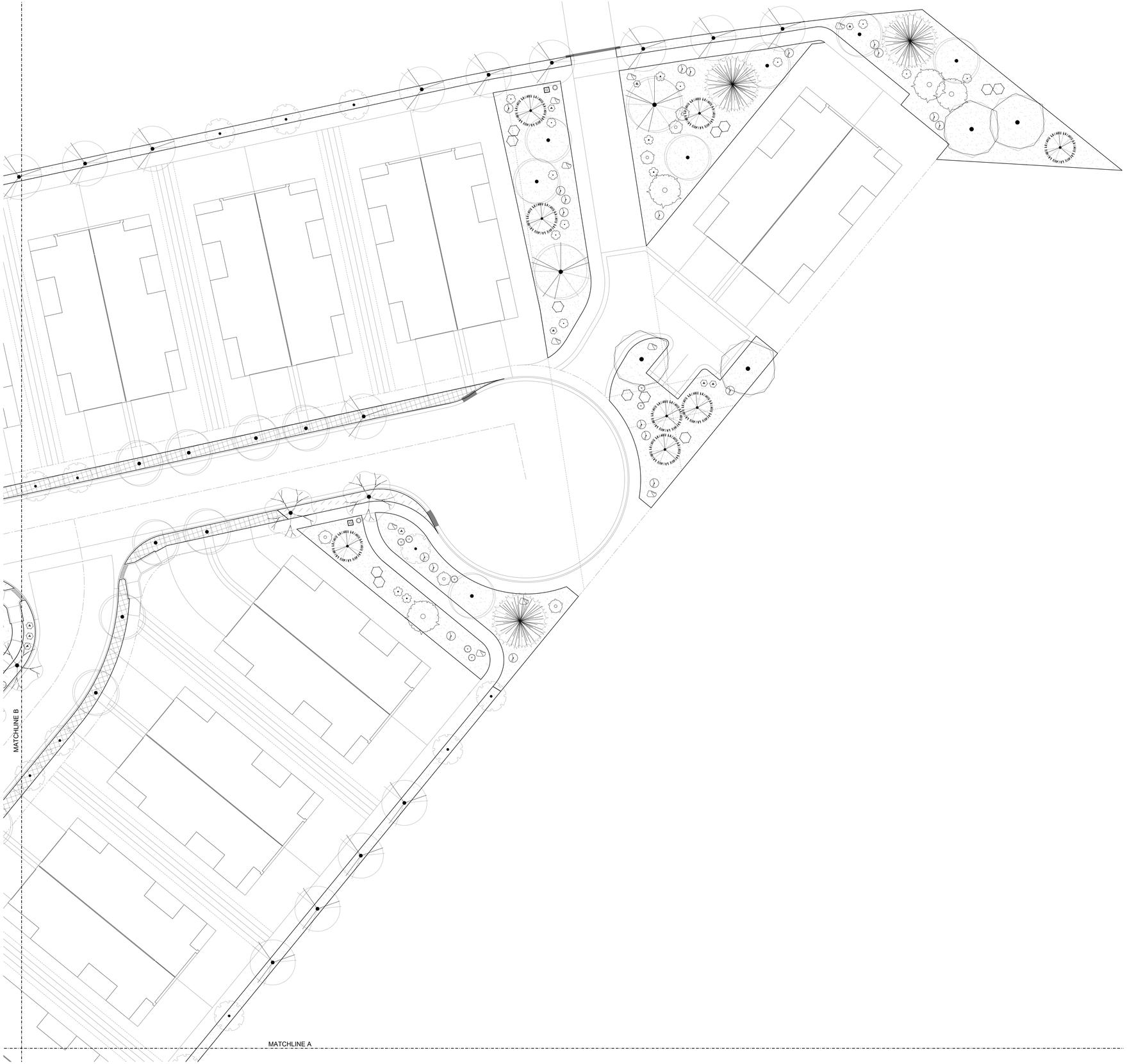


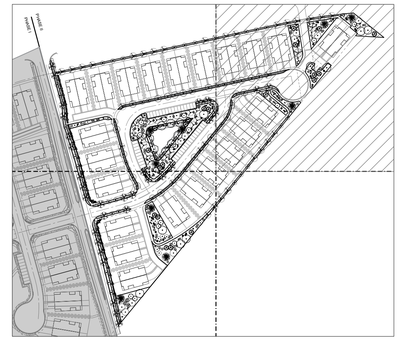

## PLANT SCHEDULE PH2

| SYMBOL | QTY | BOTANICAL / COMMON NAME | SIZE | WATER |
|---|---|---|---|---|
| **DECIDUOUS TREES** | | | | |
| | 17 | ACER NEGUNDO `SENSATION`<br>SENSATION BOX ELDER MAPLE | 2" B&B | L-M |
| | 45 | MALUS X `SPRING SNOW`<br>SPRING SNOW CRABAPPLE | 2" B&B | L-M |
| | 47 | PYRUS CALLERYANA `CLEVELAND SELECT`<br>CLEVELAND SELECT PEAR | 2" B&B | L-M |
| | 2 | QUERCUS BUCKLEYI<br>BUCKLEY OAK | 2" B&B | L-M |
| | 34 | ULMUS PROPINQUA `EMERALD SUNSHINE`<br>EMERALD SUNSHINE ELM | 2" B&B | L-M |
| | 39 | ULMUS X `FRONTIER`<br>FRONTIER ELM | 2" B&B | L-M |
| **EVERGREEN TREES** | | | | |
| | 9 | CEDRUS ATLANTICA<br>ATLAS CEDAR | 6` | L-M |
| | 9 | PINUS LEUCODERMIS<br>BOSNIAN PINE | 6` | L-M |
| | 21 | PINUS NIGRA<br>AUSTRIAN BLACK PINE | 6` | L-M |
| **DECIDUOUS SHRUBS** | | | | |
| | 24 | ARTEMISIA FILIFOLIA<br>SAND SAGEBRUSH | 5 GAL | VL-L |
| | 31 | FALLUGIA PARADOXA<br>APACHE PLUME | 5 GAL | VL-L |
| | 48 | RHUS TRILOBATA<br>THREE LEAF SUMAC | 5 GAL | VL-L |
| | 51 | ROSA WOODSII<br>MOUNTAIN ROSE | 5 GAL | VL-L |
| **EVERGREEN SHRUBS** | | | | |
| | 30 | AGAVE PARRYI<br>PARRY`S AGAVE | 5 GAL | VL-L |
| | 18 | CERCOCARPUS LEDIFOLIUS<br>CURL-LEAF MOUNTAIN MAHOGANY | 5 GAL | VL-L |
| | 51 | ERICAMERIA LARICIFOLIA AGUIRRE<br>AGUIRRE TURPENTINE BUSH | 5 GAL | VL-L |
| | 55 | MAHONIA REPENS<br>CREEPING MAHONIA | 5 GAL | VL-L |
| **VINE/ESPALIER** | | | | |
| | 26 | PARTHENOCISSUS QUINQUEFOLIA<br>VIRGINA CREEPER | 5 GAL | VL-L |

## MATERIAL SCHEDULE PH2

| SYMBOL | DESCRIPTION | QTY |
|---|---|---|
| | LARGE BOULDER | 29 |
| | ANOVA RALLY 32 GALLON TRASH RECEPTACLE, D6004 | 6 |
| | ANOVA COMPLETE PET STATION DISPENSER W/ LID, BAGS & SIGN & POST KDP1003 | 7 |
| | 3/4" WALLIN GRAVEL<br>2" DEPTH W/ FILTER FABRIC | 53,984 SF |
| | 3/4" GRAY CRUSHED GRAVEL<br>2" DEPTH W/ FILTER FABRIC | 5,715 SF |
| | 2" - 4" WALLIN ANGULAR COBBLE GRAVEL<br>4" DEPTH W/ FILTER FABRIC | 7,646 SF |

YELLOWSTONE LANDSCAPE
www.yellowstonelandscape.com
PO Box 10597
Albuquerque, NM 87184
505.898.9615
design@yellowstonelandscape. com

STATE OF NEW MEXICO
CODY McNALLEN
650
REGISTERED LANDSCAPE ARCHITECT
9/3/24

Date: 08.19.2024
Revisions:
09.03.2024

Drawn by: PL
Reviewed by: CM

# CAJA DEL ORO
Ph2
Santa Fe, NM

NORTH

Scale: 1" = 20'

10 0 20 40

Sheet Title:
Landscape Plan

Sheet Number:
LP-02

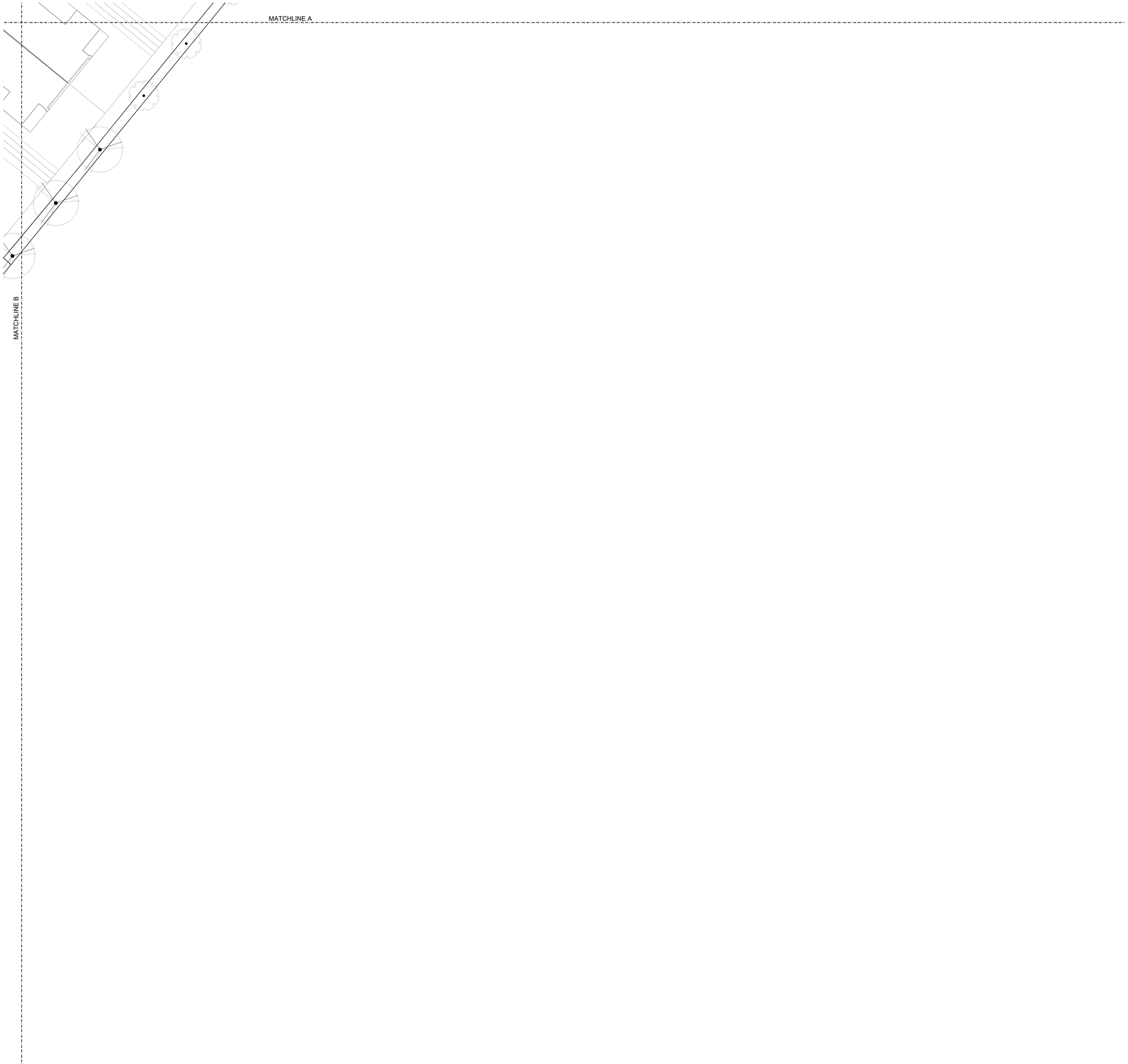




## PLANT SCHEDULE PH2

| SYMBOL | QTY | BOTANICAL / COMMON NAME | SIZE | WATER |
|---|---|---|---|---|
| **DECIDUOUS TREES** | | | | |
| | 17 | ACER NEGUNDO `SENSATION`<br>SENSATION BOX ELDER MAPLE | 2" B&B | L-M |
| | 45 | MALUS X `SPRING SNOW`<br>SPRING SNOW CRABAPPLE | 2" B&B | L-M |
| | 47 | PYRUS CALLERYANA `CLEVELAND SELECT`<br>CLEVELAND SELECT PEAR | 2" B&B | L-M |
| | 2 | QUERCUS BUCKLEYI<br>BUCKLEY OAK | 2" B&B | L-M |
| | 34 | ULMUS PROPINQUA `EMERALD SUNSHINE`<br>EMERALD SUNSHINE ELM | 2" B&B | L-M |
| | 39 | ULMUS X `FRONTIER`<br>FRONTIER ELM | 2" B&B | L-M |
| **EVERGREEN TREES** | | | | |
| | 9 | CEDRUS ATLANTICA<br>ATLAS CEDAR | 6` | L-M |
| | 9 | PINUS LEUCODERMIS<br>BOSNIAN PINE | 6` | L-M |
| | 21 | PINUS NIGRA<br>AUSTRIAN BLACK PINE | 6` | L-M |
| **DECIDUOUS SHRUBS** | | | | |
| | 24 | ARTEMISIA FILIFOLIA<br>SAND SAGEBRUSH | 5 GAL | VL-L |
| | 31 | FALLUGIA PARADOXA<br>APACHE PLUME | 5 GAL | VL-L |
| | 48 | RHUS TRILOBATA<br>THREE LEAF SUMAC | 5 GAL | VL-L |
| | 51 | ROSA WOODSII<br>MOUNTAIN ROSE | 5 GAL | VL-L |
| **EVERGREEN SHRUBS** | | | | |
| | 30 | AGAVE PARRYI<br>PARRY`S AGAVE | 5 GAL | VL-L |
| | 18 | CERCOCARPUS LEDIFOLIUS<br>CURL-LEAF MOUNTAIN MAHOGANY | 5 GAL | VL-L |
| | 51 | ERICAMERIA LARICIFOLIA AGUIRRE<br>AGUIRRE TURPENTINE BUSH | 5 GAL | VL-L |
| | 55 | MAHONIA REPENS<br>CREEPING MAHONIA | 5 GAL | VL-L |
| **VINE/ESPALIER** | | | | |
| | 26 | PARTHENOCISSUS QUINQUEFOLIA<br>VIRGINA CREEPER | 5 GAL | VL-L |

## MATERIAL SCHEDULE PH2

| SYMBOL | DESCRIPTION | QTY |
|---|---|---|
| | LARGE BOULDER | 29 |
| | ANOVA RALLY 32 GALLON TRASH RECEPTACLE, D6004 | 6 |
| | ANOVA COMPLETE PET STATION DISPENSER W/ LID, BAGS & SIGN & POST KDP1003 | 7 |
| | 3/4" WALLIN GRAVEL<br>2" DEPTH W/ FILTER FABRIC | 53,984 SF |
| | 3/4" GRAY CRUSHED GRAVEL<br>2" DEPTH W/ FILTER FABRIC | 5,715 SF |
| | 2" - 4" WALLIN ANGULAR COBBLE GRAVEL<br>4" DEPTH W/ FILTER FABRIC | 7,646 SF |

YELLOWSTONE LANDSCAPE
www.yellowstonelandscape.com
PO Box 10597
Albuquerque, NM 87184
505.898.9615
design@yellowstonelandscape. com

STATE OF NEW MEXICO
CODY McNALLEN
850
REGISTERED LANDSCAPE ARCHITECT
9/3/24

Date: 08.19.2024
Revisions:
- 09.03.2024
-
-
-
-

Drawn by: PL
Reviewed by: CM

# CAJA DEL ORO Ph2

Santa Fe, NM

NORTH

Scale: 1" = 20'

10 0 20 40

Sheet Title:
Landscape Plan

Sheet Number:
LP-03

Z:\Drawing\PLOTS\DSDN - TRANSFER\ - ACTIVE DBS\Caja del Oro\Ph 1 - CADD\Caja Del Oro_Landscape Plan_20240903.dwg, 9/3/2024 4:10:04 PM, DWG To PDF.pc3

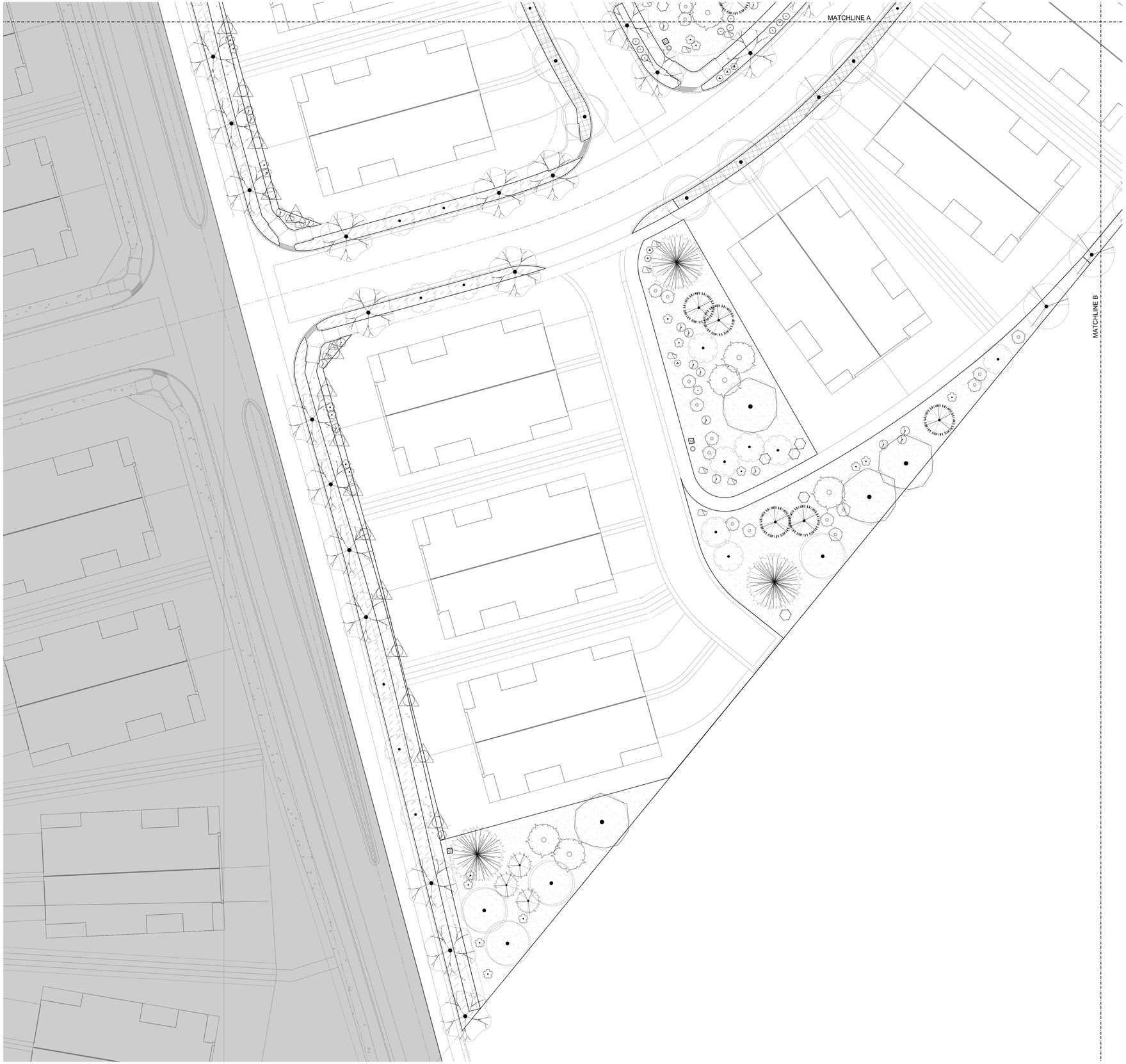


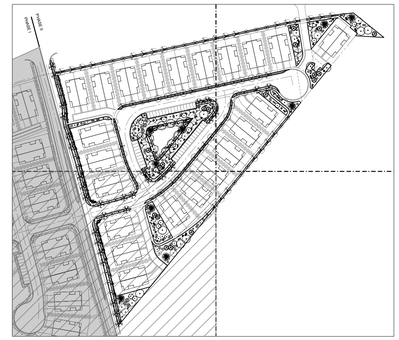

## PLANT SCHEDULE PH2

| SYMBOL | QTY | BOTANICAL / COMMON NAME | SIZE | WATER |
|---|---|---|---|---|
| **DECIDUOUS TREES** | | | | |
| | 17 | ACER NEGUNDO `SENSATION`<br>SENSATION BOX ELDER MAPLE | 2" B&B | L-M |
| | 45 | MALUS X `SPRING SNOW`<br>SPRING SNOW CRABAPPLE | 2" B&B | L-M |
| | 47 | PYRUS CALLERYANA `CLEVELAND SELECT`<br>CLEVELAND SELECT PEAR | 2" B&B | L-M |
| | 2 | QUERCUS BUCKLEYI<br>BUCKLEY OAK | 2" B&B | L-M |
| | 34 | ULMUS PROPINQUA `EMERALD SUNSHINE`<br>EMERALD SUNSHINE ELM | 2" B&B | L-M |
| | 39 | ULMUS X `FRONTIER`<br>FRONTIER ELM | 2" B&B | L-M |
| **EVERGREEN TREES** | | | | |
| | 9 | CEDRUS ATLANTICA<br>ATLAS CEDAR | 6` | L-M |
| | 9 | PINUS LEUCODERMIS<br>BOSNIAN PINE | 6` | L-M |
| | 21 | PINUS NIGRA<br>AUSTRIAN BLACK PINE | 6` | L-M |
| **DECIDUOUS SHRUBS** | | | | |
| | 24 | ARTEMISIA FILIFOLIA<br>SAND SAGEBRUSH | 5 GAL | VL-L |
| | 31 | FALLUGIA PARADOXA<br>APACHE PLUME | 5 GAL | VL-L |
| | 48 | RHUS TRILOBATA<br>THREE LEAF SUMAC | 5 GAL | VL-L |
| | 51 | ROSA WOODSII<br>MOUNTAIN ROSE | 5 GAL | VL-L |
| **EVERGREEN SHRUBS** | | | | |
| | 30 | AGAVE PARRYI<br>PARRY`S AGAVE | 5 GAL | VL-L |
| | 18 | CERCOCARPUS LEDIFOLIUS<br>CURL-LEAF MOUNTAIN MAHOGANY | 5 GAL | VL-L |
| | 51 | ERICAMERIA LARICIFOLIA AGUIRRE<br>AGUIRRE TURPENTINE BUSH | 5 GAL | VL-L |
| | 55 | MAHONIA REPENS<br>CREEPING MAHONIA | 5 GAL | VL-L |
| **VINE/ESPALIER** | | | | |
| | 26 | PARTHENOCISSUS QUINQUEFOLIA<br>VIRGINA CREEPER | 5 GAL | VL-L |

## MATERIAL SCHEDULE PH2

| SYMBOL | DESCRIPTION | QTY |
|---|---|---|
| | LARGE BOULDER | 29 |
| | ANOVA RALLY 32 GALLON TRASH RECEPTACLE, D6004 | 6 |
| | ANOVA COMPLETE PET STATION DISPENSER W/ LID, BAGS & SIGN & POST KDP1003 | 7 |
| | 3/4" WALLIN GRAVEL<br>2" DEPTH W/ FILTER FABRIC | 53,984 SF |
| | 3/4" GRAY CRUSHED GRAVEL<br>2" DEPTH W/ FILTER FABRIC | 5,715 SF |
| | 2" - 4" WALLIN ANGULAR COBBLE GRAVEL<br>4" DEPTH W/ FILTER FABRIC | 7,646 SF |


YELLOWSTONE LANDSCAPE
www.yellowstonelandscape.com
PO Box 10597
Albuquerque, NM 87184
505.898.9615
design@yellowstonelandscape. com


STATE OF NEW MEXICO
CODY McNALLEN
650
REGISTERED LANDSCAPE ARCHITECT
9/3/24

Date: 08.19.2024
Revisions:
09.03.2024

Drawn by: PL
Reviewed by: CM

# CAJA DEL ORO
## Ph2
Santa Fe, NM

NORTH

Scale: 1" = 20'

10 0 20 40

Sheet Title:
Landscape Plan

Sheet Number:
LP-04

## ELECTRICAL SPECIFICATIONS

A. THE ELECTRICAL CONTRACTOR SHALL PROVIDE AND INSTALL ALL ELECTRICAL FACILITIES IN ACCORDANCE WITH THE FOLLOWING SPECIFICATIONS, PLANS AND ASSOCIATED NOTES, NATIONAL ELECTRICAL CODE, STATE AND LOCAL CODES AND IN A NEAT AND WORKMANLIKE MANNER.

B. CONTRACTOR SHALL BECOME FAMILIAR WITH EXISTING CONDITIONS AT THE JOB SITE.

C. ALL UNFORESEEN CONDITIONS THAT MAY AFFECT SCOPE OF WORK / CODE VIOLATIONS, DISCOVERED DURING DEMOLITION / CONSTRUCTION, SHALL IMMEDIATELY BE BROUGHT TO THE ATTENTION OF THE ARCHITECT / OWNER / ENGINEER.

D. THE ELECTRICAL CONTRACTOR SHALL INCLUDE IN HIS BID THE COST OF ALL PERMITS, TESTS, INSPECTIONS, AND COST TO COORDINATE WITH PNM, AND VISIT THE SITE OF WORK PRIOR TO SUBMITTING BID.

E. THE ELECTRICAL CONTRACTOR SHALL COORDINATE HIS WORK WITH ALL OTHER TRADES.

F. THE ELECTRICAL CONTRACTOR SHALL GUARANTEE ALL WORK AND MATERIAL FOR A PERIOD OF ONE YEAR AFTER DATE OF ACCEPTANCE.

G. A SET OF MARKED UP PRINTS SHALL BE PREPARED SHOWING ALL CHANGES MADE DURING CONSTRUCTION AND TURNED OVER TO THE OWNER AT THE END OF THE CONSTRUCTION. ALL CHANGES MUST HAVE THE OWNER'S APPROVAL.

H. ANY DISCREPANCY BETWEEN MATERIAL DESCRIPTION AND CATALOG NUMBER SHALL BE BROUGHT TO THE ARCHITECT'S, ENGINEER'S OR OWNER'S ATTENTION IMMEDIATELY.

I. CONTRACTOR SHALL SUBMIT SHOP DRAWINGS OR CATALOG CUT SHEETS ON ALL ELECTRICAL DEVICES, LIGHTING FIXTURES AND EQUIPMENT WHICH MAY BE SUBSTITUTED FROM THAT SPECIFIED IN CONTRACT DOCUMENTS.

J. INTERRUPTION OF ANY ELECTRICAL SERVICES SHALL BE COORDINATED WITH THE OWNER AT LEAST 7 DAYS PRIOR TO THE INTENDED OUTAGE AND SHALL BE REQUESTED IN WRITING WITH A COPY TO THE ARCHITECT AND OWNER.

K. ALL CONDUCTORS TO ALUMINUM XHHW. REFER TO KEYED NOTES ON PLAN AND POWER RISER DIAGRAM FOR WIRE SIZE.

L. BRANCH CIRCUITS CAN BE COMBINED IN THE SAME RACEWAY ONLY WHEN EACH BRANCH CIRCUIT HAS A DEDICATED NEUTRAL. REFERENCE 2017 NATIONAL ELECTRICAL CODE ARTICLE 210.4 AND ALL OTHER ASSOCIATED ARTICLES.

M. ELECTRICAL CONTRACTOR SHALL PROVIDE A GROUND CONDUCTOR IN ALL BRANCH CIRCUITRY. CONDUIT SHALL SERVE AS REDUNDANT GROUND ONLY.

N. PROVIDE COLOR CODING FOR 240V-1Ø-3W. MAINTAIN SAME COLOR CODING THROUGHOUT.

O. ALL CONDUITS WHICH COME IN CONTACT WITH EARTH SHALL BE WRAPPED IN SCOTCHRAP-51 OR PLASTIC COATED.

P. PANELBOARDS SHALL HAVE A CIRCUIT BREAKER SHALL BE RATED AT 10,000 AIC MINIMUM, UNLESS NOTED OTHERWISE.

Q. CONTRACTOR SHALL PROVIDE TYPED PANELBOARD DIRECTORIES FOR PANELBOARD.

R. PROVIDE ARC FLASH WARNING STICKERS PER NEC AND LOCAL AUTHORITIES.

S. PRIOR TO PROJECT ACCEPTANCE, CONTRACTOR SHALL PROVIDE THE FOLLOWING DATA:

a. ALL FEEDERS - LENGTH, SIZE AND WHAT IS FED.

b. ALL CIRCUIT BREAKERS AND FUSES: MANUFACTURER, TYPE, RATINGS.

T. FOR POLE MOUNTED LIGHTING: POLE, BASE AND ANCHORING SHALL MEET THE REQUIREMENTS OF AASHTO "STANDARD SPECIFICATIONS FOR STRUCTURAL, LUMINAIRES AND TRAFFIC SIGNALS" 6TH EDITION WITH 2015,2019 AND 2020 INTERIM REVISIONS. CONTRACTOR SHALL SUBMIT CERTIFICATION FOR REVIEW BY ENGINEER

## ELECTRICAL SYMBOL LEGEND

| SYMBOL | DESCRIPTION |
|---|---|
| | POLE MOUNTED FIXTURE. REFER TO LIGHT FIXTURE SCHEDULE. |
| | CONCEALED BRANCH CIRCUIT WITH CONDUCTORS AS INDICATED. NEUTRAL, HOT, SWITCH LEG AND GROUND RESPECTIVELY |
| | BRANCH CIRCUIT OR CONDUIT INSTALLED UNDERGROUND OR UNDER FLOOR |
| P2-2,4 | HOMERUN TO PANELBOARD WITH BRANCH CIRCUIT NUMBERS INDICATED |
| T | TRANSFORMER, DRY TYPE, SIZE AS INDICATED, MOUNTING VARIES |
| | 120V PANELBOARD, REFER TO PANEL SCHEDULE |
| | TRANSFORMER |
| | CIRCUIT BREAKER |
| WP | WEATHERPROOF (NEMA 3R) |
| EX | EXISTING |
| R | REMOVE |
| NIC | NOT IN CONTRACT |
| NTS | NOT TO SCALE |
| A.F.F. | ABOVE FINISHED FLOOR |
| A.F.G. | ABOVE FINISHED GRADE |
| IG | ISOLATED GROUND |
| UG | UNDERGROUND |
| FACP | FIRE ALARM CONTROL PANEL |
| U.N.O. | UNLESS NOTED OTHERWISE |
| OFOI | OWNER FURNISHED, OWNER INSTALLED |
| OFCI | OWNER FURNISHED, CONTRACTOR INSTALLED |

## GENERAL NOTES:

a. LIGHTING FIXTURES ARE OF TYPE AS INDICATED ON LIGHT FIXTURE SCHEDULE UNLESS NOTED OTHERWISE.

b. LIGHTING FIXTURE MOUNTING HEIGHT AND METHOD IS CALLED OUT ON LIGHT FIXTURE SCHEDULE

c. ANY SPECIFIC DETAILS ABOVE (MOUNTING HEIGHTS, PART NUMBERS, CONNECTION METHODS, ETC.) MAY BE MODIFIED OR REPLACED BY INFORMATION ON PLANS, SCHEDULES, DETAILS, RISERS, ETC. DETAILS NOT SPECIFICALLY MODIFIED REMAIN AS GIVEN ABOVE.

d. NOT ALL SYMBOLS SHOWN ON THIS SYMBOL LEGEND MAY APPLY TO THIS PROJECT

## LIGHT FIXTURE SCHEDULE

| TYPE | FIXTURE DESCRIPTION | LAMPS | MOUNTING |
|---|---|---|---|
| A | LED POLE LIGHT, 2700°K, 5,500 LUMEN OUTPUT, TYPE 2 DISTRIBUTION, FULL CUTOFF, 7 PIN PHOTOCELL RECEPTACLE WITH UBICQUIA UBICELL CONTROL (CONTROLLER IS CONTRACTOR PROVIDED, CONTRACTOR INSTALLED AND ORDERED SEPARATELY), MOUNTED ON POLE (23'-6" LENGTH, 25' MOUNTING HEIGHT), COLOR BY OWNER AMERICAN ELECTRIC LIGHTING #ATBS-P10-MVOLT-R2-27K-XL-NL-P7-VR | LED 2700°K 5,500LM 40W | POLE MOUNTED 25'-0" |
| A2 | LED POLE LIGHT, 2700°K, 5,500 LUMEN OUTPUT, TYPE 2 DISTRIBUTION, FULL CUTOFF, 7 PIN PHOTOCELL RECEPTACLE WITH UBICQUIA UBICELL CONTROL, (CONTROLLER IS CONTRACTOR PROVIDED, CONTRACTOR INSTALLED AND ORDERED SEPARATELY), MOUNTED ON POLE (23'-6" LENGTH, 25' MOUNTING HEIGHT), COLOR BY OWNER, 2 HEADS AMERICAN ELECTRIC LIGHTING #ATBS-P10-MVOLT-R2-27K-XL-NL-P7-VR | LED 2700°K 5,500LM 40W | POLE MOUNTED 25'-0" |

THE RESPONSE GROUP, INC.
An Electrical Engineering Corporation
6705 Academy Rd. NE, Suite B
Albuquerque, New Mexico 87109
Phone:(505) 323-7629 Fax:(505) 323-7594
E-mail: theresponsegroup@trg-inc.net

REVISION

DESIGNED TRG/rhp
DRAWN TRG/rhp
CHECKED TRG/rfr
DATE 10.8.2024

RESPEC
COMMUNITY DESIGN SOLUTIONS
7770 JEFFERSON STREET NE, SUITE 200
ALBUQUERQUE, NEW MEXICO 87109
WWW.RESPEC.COM PHONE: (505)353-9718

STAMP




24270

THIS DRAWING IS INCOMPLETE AND NOT TO BE USED FOR CONSTRUCTION UNLESS IT IS STAMPED, SIGNED AND DATED

PROJ. #: ####

PROJECT NAME: PULTE CAJA DEL ORO PHASE 2

SHEET TITLE: ELECTRICAL LEGEND AND PROJECT NOTES

SUBMITTED FOR: CONSTRUCTION

SHEET NUMBER: E-001

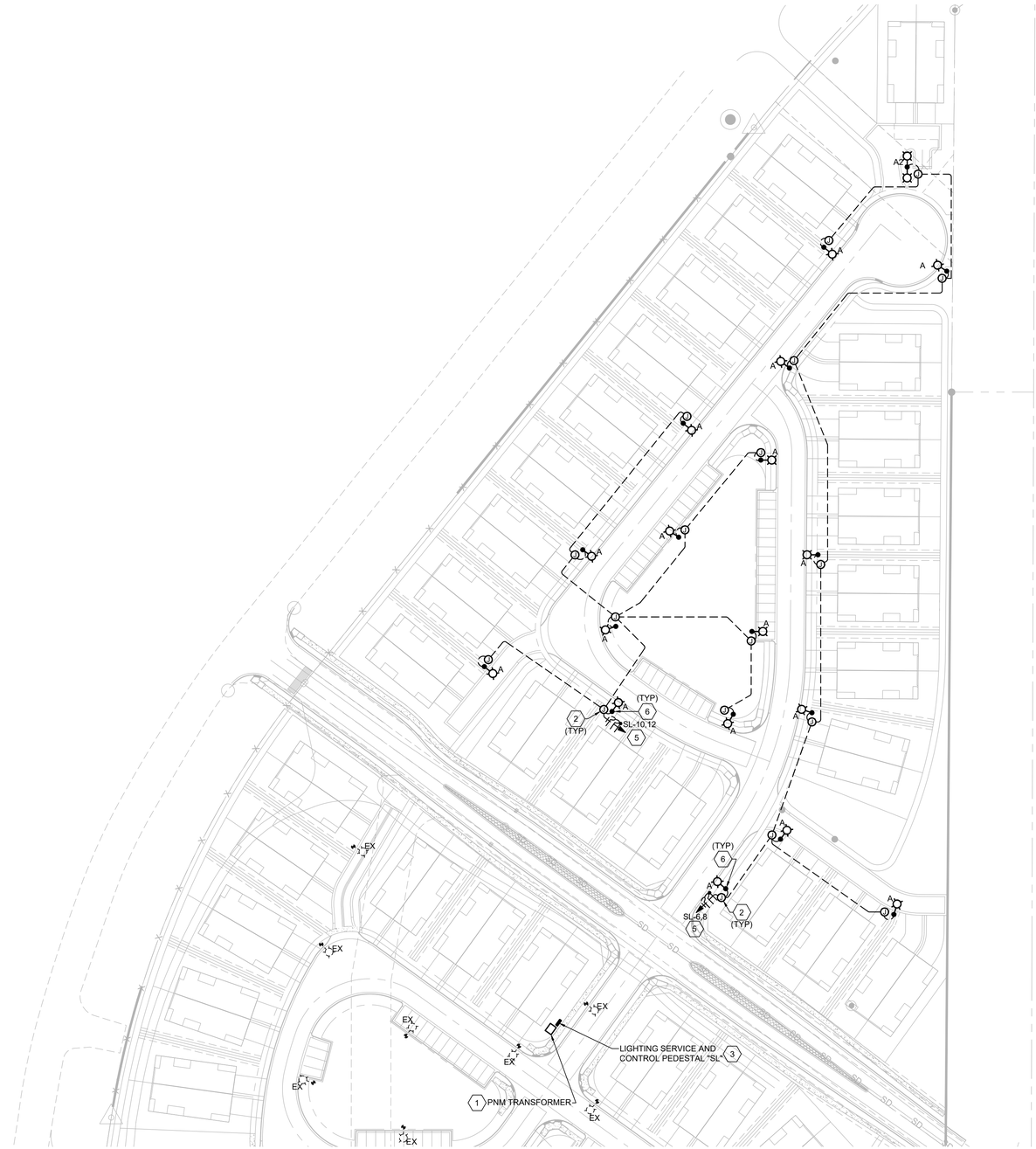


A1 ELECTRICAL SITE PLAN

SCALE: 1" = 60'

## GENERAL NOTES

A. IF ANY UTILITY LINES, PIPELINES, OR UNDERGROUND UTILITY LINES ARE SHOWN ON THESE DRAWINGS, THEY ARE SHOWN IN AN APPROXIMATE MANNER ONLY, AND SUCH LINES MAY EXIST WHERE NONE ARE SHOWN. IF ANY SUCH EXISTING LINES ARE SHOWN, THE LOCATION IS BASED UPON INFORMATION PROVIDED BY THE UTILITY OR PIPELINE COMPANY, THE OWNER OR BY OTHERS, AND THE INFORMATION MAY BE INCOMPLETE, OR MAY BE OBSOLETE BY THE TIME CONSTRUCTION COMMENCES.

B. THE ENGINEER HAS UNDERTAKEN NO FIELD VERIFICATION OF THE LOCATION, DEPTH, SIZE OR TYPE OF EXISTING UTILITY LINES, PIPELINES, OR UNDERGROUND UTILITY LINES, MAKES NO REPRESENTATION PERTAINING THERETO, AND ASSUMES NO RESPONSIBILITY OR LIABILITY THEREFORE. THE CONTRACTOR SHALL INFORM ITSELF TO THE LOCATION OF ANY UTILITY LINE, PIPELINE OR UNDERGROUND UTILITY LINE IN OR NEAR THE AREA OF THE WORK IN ADVANCE OF AND DURING EXCAVATION WORK. THE CONTRACTOR IS FULLY RESPONSIBLE OF ANY AND ALL DAMAGE CAUSED BY IT'S FAILURE TO LOCATE, IDENTIFY AND PRESERVE ANY AND ALL EXISTING UTILITIES, LINES, PIPELINES, OR UNDERGROUND UTILITY LINES. THE CONTRACTOR SHALL COMPLY WITH STATE STATUTES, MUNICIPAL AND LOCAL ORDINANCES, RULES, AND REGULATIONS, IF ANY, PERTAINING TO THE LOCATION OF THESE LINES AND FACILITIES IN PLANNING AND CONDUCTING EXCAVATION, WHETHER BY CALLING OR NOTIFYING THE UTILITIES, COMPLYING WITH "NM ONE CALL" PROCEDURES, OR OTHERWISE.

C. UNDERGROUND CONDUCTORS SHALL RUN CONTINUOUS THROUGH THE PULL BOX TO THE LIGHT POLE. SPLICING CONDUCTORS SHALL ONLY OCCUR IN THE LIGHT POLE.

D. LEAVE 3 FEET OF SLACK WIRE COILED IN EACH PULL BOX.

E. REFER TO SHEET E-001 FOR LIGHT FIXTURE SCHEDULE.

F. UNDERGROUND CONDUIT AND CONDUCTORS SHALL BE BURIED A MINIMUM OF 36" BELOW FINISHED GRADE. CONTRACTOR SHALL PROVIDE AND INSTALL RED WARNING TAPE 12" ABOVE CONDUIT. CONTRACTOR IS RESPONSIBLE FOR ALL TRENCHING, CONDUIT AND CONDUCTOR INSTALLATION AND BACKFILL OF TRENCH UNLESS NOTED OTHERWISE.

G. CIRCUITING SHOWN ON PLANS IS SCHEMATIC. CONTRACTOR SHALL FIELD COORDINATE ROUTING IN ORDER TO AVOID CONFLICTS WITH OTHER UTILITIES, AND TO MINIMIZE CONDUIT/CONDUCTOR LENGTH.

## KEYED NOTES

1. APPROXIMATE LOCATION OF PNM TRANSFORMER. PNM TRANSFORMER SHALL BE INSTALLED IN PHASE 1 OF PROJECT (SEPARATE CONTRACT).
2. PROVIDE AND INSTALL FLUSH-IN-GRADE QUAZITE PULLBOX AS REQUIRED. REFER TO NMDOT SPECIFICATIONS AND INSTALLATION STANDARDS FOR ADDITIONAL INFORMATION.
3. NEW 120/240V-1Ø-3W POWER PEDESTAL. REFER TO "POWER RISER DIAGRAM" ON SHEET E-501 FOR ADDITIONAL INFORMATION. LOCATION SHOWN IS APPROXIMATE, FIELD VERIFY EXACT LOCATION WITH EXISTING CONDITIONS PRIOR TO COMMENCEMENT OF WORK. POWER PEDESTAL SHALL BE INSTALLED IN PHASE 1 OF PROJECT (SEPARATE CONTRACT).
4. EXISTING SERVICE CONDUIT AND CONDUCTORS FOR SERVICE TO PANEL "SL" INSTALLED IN PHASE 1.
5. WIRE CIRCUIT WITH TRIPLEX ALUMINUM CABLING (#2 PHASE AND NEUTRAL CONDUCTOR) IN 2" CONDUIT.
6. REFER TO "FIXTURE TYPE 'A' POLE BASE DETAIL" ON SHEET E-601 FOR ADDITIONAL INFORMATION.

0 60' 120'

SCALE: 1" = 60'

THE RESPONSE GROUP, INC.
An Electrical Engineering Corporation
6705 Academy Rd. NE, Suite B
Albuquerque, New Mexico 87109
Phone:(505) 323-7629 Fax:(505) 323-7594
E-mail: theresponsegroup@trg-inc.net

| | |
|---|---|
| DESIGNED | TRG/rhp |
| DRAWN | TRG/rhp |
| CHECKED | TRG/tr |
| DATE | 10.8.2024 |

REVISION

RESPEC
COMMUNITY DESIGN SOLUTIONS
7770 JEFFERSON STREET NE, SUITE 200
ALBUQUERQUE, NEW MEXICO 87109
WWW.RESPEC.COM PHONE: (505)253-9718

STAMP

THOMAS F. ROCHELLE
NEW MEXICO
25211
PROFESSIONAL ENGINEER
10/8/2024
24270

THIS DRAWING IS INCOMPLETE AND NOT TO BE USED FOR CONSTRUCTION UNLESS IT IS STAMPED, SIGNED AND DATED

PROJ. #: ####

PROJECT NAME: PULTE CAJA DEL ORO PHASE 2

SHEET TITLE: ELECTRICAL SITE PLAN

SUBMITTED FOR: CONSTRUCTION

SHEET NUMBER: E-101

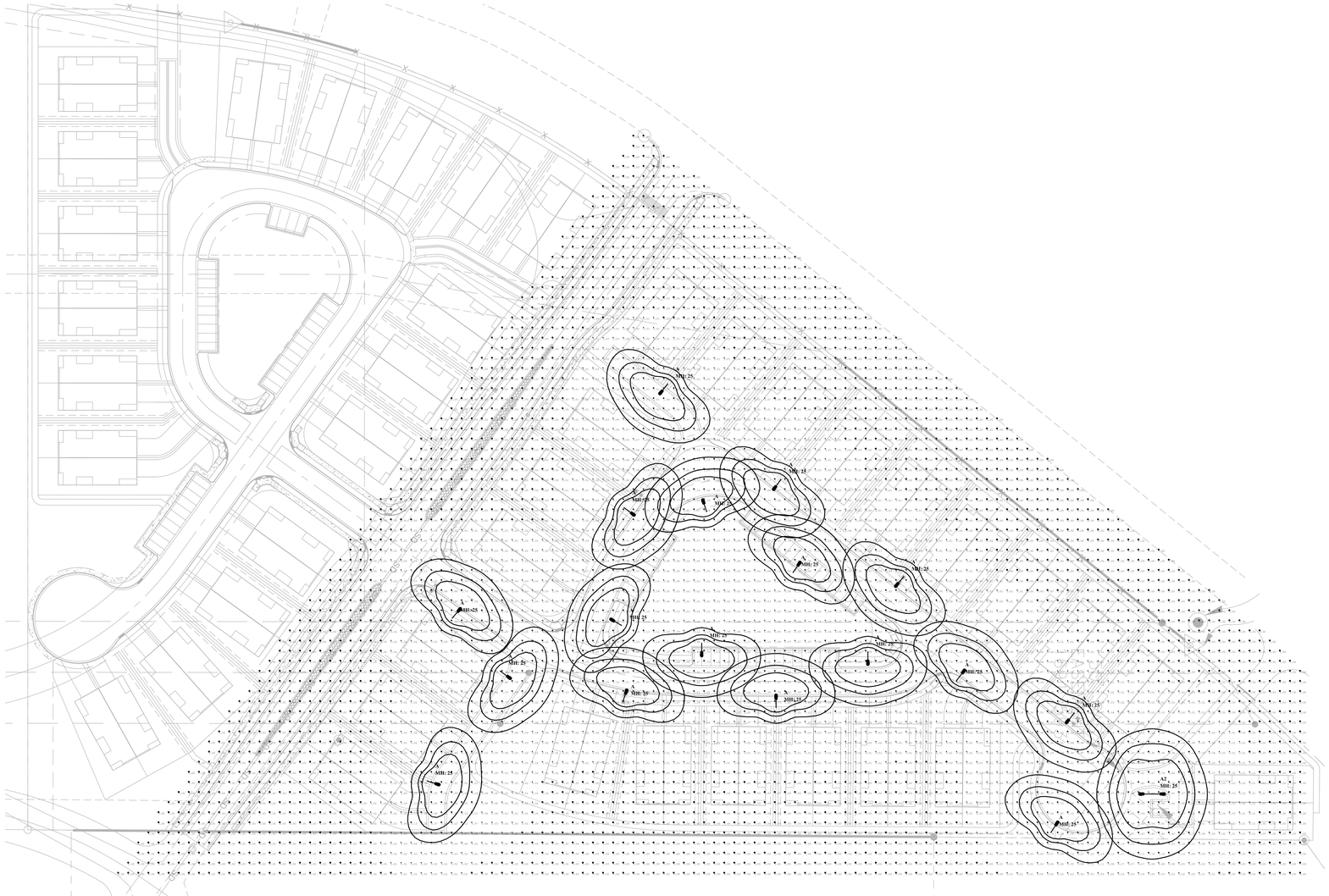
MH: 25
MH: 25
MH: 25

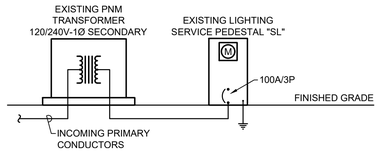


## POWER RISER DIAGRAM (1)

NTS

**PANEL / LOAD SCHEDULE - EXISTING PANELBOARD "SL"**

*LOCATION:* *VOLTAGE:* **120/240V-1P, 3W** *AMPACITY:* **100 AMPERE** *Main:* **100A/3P MCB**

*FED FROM:* **PNM Transformer** *ENCLOSURE:* **NEMA 3R** *MOUNTING:* **Free Standing** *AIC:* **65,000**

| | BKR SIZE | DESCRIPTION | DEMAND CODE | LOAD (VA) | CKT # | LOAD (VA) PHASE A | LOAD (VA) PHASE B | CKT # | LOAD (VA) | DEMAND CODE | DESCRIPTION | BKR SIZE | |
|---|---|---|---|---|---|---|---|---|---|---|---|---|---|
| (2) | 20A-2P | STREET LIGHTING | LTG | 180 | 1 | 280 | | 2 | 100 | LTG | STREET LIGHTING | 20A-2P | (2) |
| | | | LTG | 180 | 3 | | 280 | 4 | 100 | LTG | | | |
| | 20A-1P | SPARE | | | 5 | 200 | | 6 | 200 | LTG | STREET LIGHTING | 20A-2P | (3) |
| | 20A-1P | SPARE | | | 7 | | 200 | 8 | 200 | LTG | | | |
| | 20A-1P | SPARE | | | 9 | 180 | | 10 | 180 | LTG | STREET LIGHTING | 20A-2P | (3) |
| | 1P | SPACE ONLY | | | 11 | | 180 | 12 | 180 | LTG | | | |
| | 1P | SPACE ONLY | | | 13 | | | 14 | | | SPACE ONLY | 1P | |
| | 1P | SPACE ONLY | | | 15 | | | 16 | | | SPACE ONLY | 1P | |
| | 1P | SPACE ONLY | | | 17 | | | 18 | | | SPACE ONLY | 1P | |
| | 1P | SPACE ONLY | | | 19 | | | 20 | | | SPACE ONLY | 1P | |
| | 1P | SPACE ONLY | | | 21 | | | 22 | | | SPACE ONLY | 1P | |
| | 1P | SPACE ONLY | | | 23 | | | 24 | | | SPACE ONLY | 1P | |

| | | |
|---|---|---|
| **Total Phase Loads (VA):** | 660 | 660 |
| **Total Phase Loads (Amps):** | 5.5 | 5.5 |
| **Total Connected Loads (kVA):** | 1.3 | |

Notes:
1. **New Panelboard**
2. **24-Circuit, Lockable Enclosure**
3. **Copper Neutral and Ground Bus Bars**
4. **Door-in-Door Enclosure.**

**LOAD CALCULATIONS**

| Connected (kVA) by Type: | | | Estimated Demand (kVA) by Load Type: | | |
|---|---|---|---|---|---|
| **LTG** | Lighting: | 1.3 | Lighting at 125% (kVA): | 1.7 | Total Estimated Demand (kVA): 1.7 |
| **REC** | Receptacles: | | Receptacles: | | Amps at 240/120V-1 Phase (Amps): 6.9 |
| | | | 10kVA at 100% (kVA): | | Panel Ampacity (Rating): 100 |
| | | | Rest at 50% (kVA): | 0.0 | |
| **EQP** | Equipment: | | Eqp at 100% (kVA): | | Spare Capacity: 93.1% |
| **LMECH** | Largest Mech: | | Largest at 125% (kVA): | | |
| **MECH** | Mechanical: | | Rest at 100% (kVA): | | |

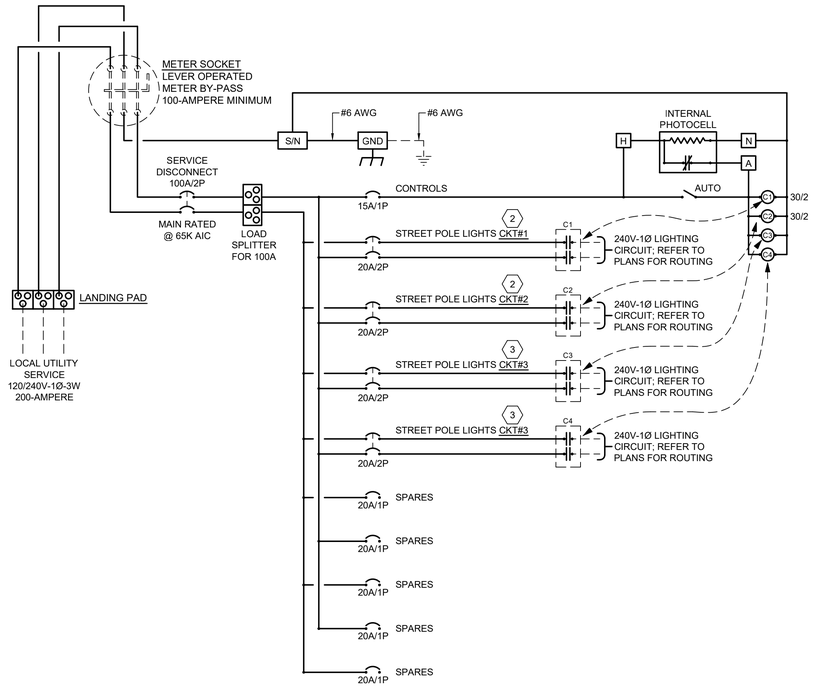


## PANELBOARD 'SL' - WIRING DIAGRAM

NTS

## KEYED NOTES (1)

1. ALL ELECTRICAL GEAR SHOWN IS TO BE INSTALLED DURING PHASE 1 (UNDER SEPERATE CONTRACT). POWER RISER DIAGRAM IS SHOWN FOR REFERENCE ONLY. REFER TO SHEET E-101 FOR APPROXIMATE LOCATION OF TRANSFORMER AND LIGHTING SERVICE AND CONTROL PEDESTAL.
2. CIRCUIT SHOWN IS TO BE INSTALLED DURING PHASE 1 (UNDER SEPERATE CONTRACT). THERE IS NO NEW WORK REQUIRED FOR THIS BRANCH CIRCUIT, DURING THIS PHASE OF CONSTRUCTION.
3. CIRCUIT SHOWN IS TO BE INSTALLED DURING THIS PHASE. CONTRACTOR SHALL REFER TO SHEET E-101 FOR APPROXIMATE LOCATION AND ROUTING OF CIRCUITS. CONTRACTOR SHALL PROVIDE AND INSTALL CIRCUIT BREAKER (LISTED FOR USE WITH EXISTING PANELBOARD), CONDUIT, WIRING AND CONTROLS WITHIN POWER PEDESTAL "SL". CONTRACTOR SHALL MAKE ALL REQUIRED CONNECTIONS FOR A COMPLETE AND OPERATIONAL SYSTEM.

THE RESPONSE GROUP, INC.
An Electrical Engineering Corporation
6705 Academy Rd. NE, Suite B
Albuquerque, New Mexico 87109
Phone:(505) 323-7629 Fax:(505) 323-7594
E-mail: theresponsegroup@trg-inc.net

REVISION

DESIGNED TRG/rhp
DRAWN TRG/rhp
CHECKED TRG/tfr
DATE 10.8.2024

RESPEC
COMMUNITY DESIGN SOLUTIONS
7770 JEFFERSON STREET NE, SUITE 200
ALBUQUERQUE, NEW MEXICO 87109
WWW.RESPEC.COM PHONE: (505)353-9718

STAMP

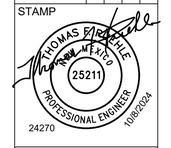


THIS DRAWING IS INCOMPLETE AND NOT TO BE USED FOR CONSTRUCTION UNLESS IT IS STAMPED, SIGNED AND DATED

PROJ. #: ####

PROJECT NAME: PULTE CAJA DEL ORO PHASE 2

SHEET TITLE: ELECTRICAL DISTRIBUTION

SUBMITTED FOR: CONSTRUCTION

SHEET NUMBER: E-501

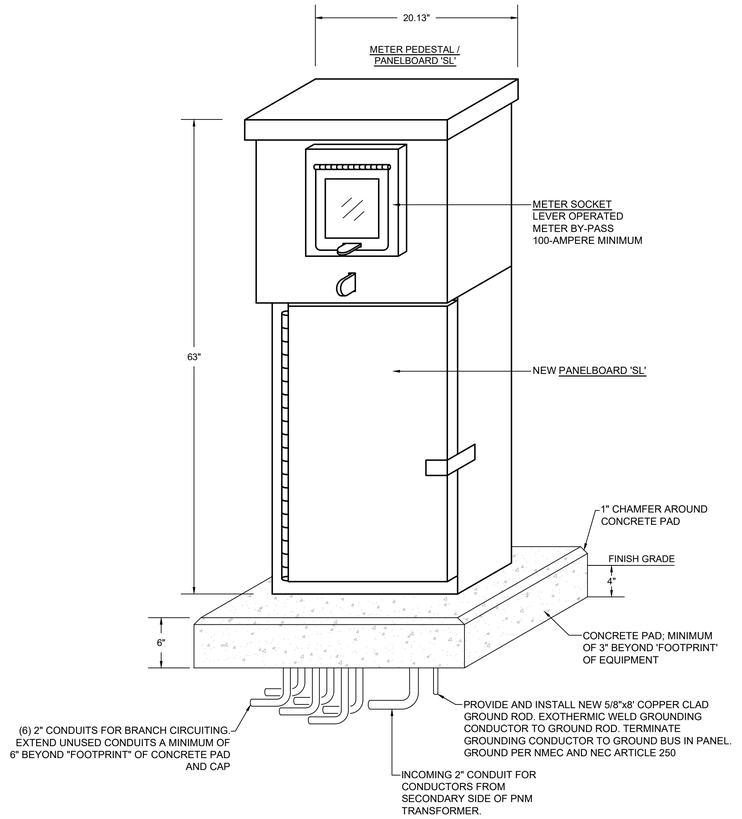


## PANELBOARD 'SL' - ELEVATION / MOUNTING DETAIL

NOT TO SCALE

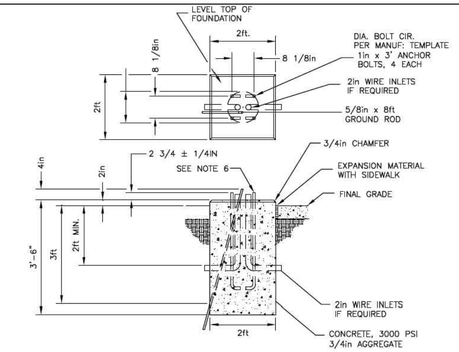


## FOUNDATION DETAIL - STREETLIGHT

NOTES

(1) NOT USED

(2) SOIL OUTSIDE OF FOUNDATION DIMENSIONS MUST BE COMPACTED.

(3) FOR SIDEWALK INSTALLATION: TOP OF FOUNDATION IS FLUSH WITH SIDEWALK AND AND THERE IS NO CHAMFER

(4) USE EXPANSION MATERIAL IN AND AGAINST SIDEWALK INSTALLATION.

(5) ALLOW A MINIMUM OF 14 DAYS OF CURING TIME BEFORE ERECTING POLE.

(6) THE STEEL ANCHOR BOLTS SHALL CONFORM TO THE FOLLOWING SPECIFICATION:
STEEL = ASTM A675, GRADE 90;THREADS = 1-8 UNC; THREADED LENGTH = 6 INCHES; COATING = HOT DIP GALVANIZE ON THREADED END; COATING MUST EXTEND AT LEAST 12 INCHES.

THE RESPONSE GROUP, INC.
An Electrical Engineering Corporation
6705 Academy Rd. NE, Suite B
Albuquerque, New Mexico 87109
Phone:(505) 323-7629 Fax:(505) 323-7594
E-mail: theresponsegroup@trg-inc.net

REVISION

DESIGNED TRG/rhp
DRAWN TRG/rhp
CHECKED TRG/ltr
DATE 10.8.2024

RESPEC
COMMUNITY DESIGN SOLUTIONS
770 JEFFERSON STREET NE, SUITE 200
ALBUQUERQUE, NEW MEXICO 87109
WWW.RESPEC.COM PHONE: (505)253-9718

STAMP

THOMAS F. ROEHLE
NEW MEXICO
25211
PROFESSIONAL ENGINEER
10/8/2024
24270

THIS DRAWING IS INCOMPLETE AND NOT TO BE USED FOR CONSTRUCTION UNLESS IT IS STAMPED, SIGNED AND DATED

PROJ. #: ####

PROJECT NAME: PULTE CAJA DEL ORO PHASE 2

SHEET TITLE: ELECTRICAL DETAILS

SUBMITTED FOR: CONSTRUCTION

SHEET NUMBER: E-601

CITY OF SANTA FE

# Planning and Land Use Department
# Planning Commission Staff Report

| | |
|---|---|
| **Case No:** | 2024-9585 |
| **Hearing Date:** | March 6, 2025 |
| **Applicant:** | Santa Fe Las Soleras Medical Development LLC, Las Soleras Center LLC, and Las Soleras Village LLC |
| **Agent:** | Orion West LLC |
| **Request:** | Final Serial Subdivision Plat |
| **Location:** | 4000 Beckner Road (Tract 18A) and 4200 Beckner Road (Tract 18B) |
| **Case Mgr.:** | Janice Biletnikoff, AICP |
| **Zoning:** | C-2 (General Commercial) |
| **Overlay:** | Suburban Archaeological Review District |
| **Pre-app. Mtg.:** | June 23, 2024 |
| **ENN Mtg.:** | November 27, 2023 |
| **Planning Commission Hearing:** | Preliminary Serial Subdivision Plat was approved on November 21, 2024 |

**Proposal:** Requests the subdivision of Lots 18A (29.82 acres) and 18B (18.01 acres) of the Las Soleras Master Plan to create a total of six lots. The subject parcels are zoned C-2 (General Commercial) and are located within the Suburban Archaeological Review District.




**Case 2024-9585: 4000 and 4200 Beckner Road Final Serial Subdivision Plat.** Orion West LLC, Agent for Santa Fe Las Soleras Medical Development LLC, Las Soleras Center LLC, and Las Soleras Village LLC, Owners, requests approval of a final plat to subdivide Lots 18A (29.82 acres) and 18B (18.01 acres) of the Las Soleras Master Plan to create a total of six lots. The parcels are zoned C-2 (General Commercial) and are located within the Suburban Archaeological Review District.

## I. RECOMMENDATION

The Land Use Department recommends **APPROVAL** with the conditions of approval as outlined in this report. One motion will be required in this case:

***Approve or deny Case 2024-9585, subject to the conditions of approval and technical corrections recommended by staff.***

## II. CONDITIONS OF APPROVAL

The conditions of approval and technical corrections required by the Planning and Land Use Department and the City's Development Review Team (DRT) can be found in Attachment A: *Conditions of Approval and Technical Corrections*.

## III. EXECUTIVE SUMMARY

On November 21, 2024, the Planning Commission heard the Preliminary Serial Subdivision Plat case for a six-lot serial subdivision from two existing parcels in the C-2 (General Commercial) zone district. The Planning Commission approved the Preliminary Serial Subdivision Plat subject to conditions of approval and technical corrections (see Attachment A: *Conditions of Approval and Technical Corrections* and Attachment B: *Findings of Fact and Conclusions of Law*).

Orion West LLC ("Agent"), representing Santa Fe Las Soleras Medical Development LLC, Las Soleras Center LLC, and Las Soleras Village LLC ("Applicants"), requests Final Subdivision Plat approval for a six-lot subdivision ("Project") on Lots 18A (29.82 acres) and 18B (18.01 acres) of the Las Soleras Master Plan, representing a total subdivision area of +/- 47.83 acres ("Property"). Both parcels are legal lots of record, approved by the City and recorded in the Office of the Santa Fe County Clerk on December 12, 2022 (see Attachment D: *Applicant Materials*).

The Applicant completed the requirements of Santa Fe City Code ("SFCC") Subsections 14-3.1(E) *"Pre-Application Conferences,"* 14-3.1(F) "*Early Neighborhood Notification Procedures,*" and 14-3.1(H) *"Notice Requirements" for the Final Plat.*

Staff's analysis finds that the Applicant's request satisfies the approval criteria required in Subsection 14-3.7(C)(1) and recommends APPROVAL subject to the conditions identified in Attachment A: *Conditions of Approval and Technical Corrections*.

## IV. PROJECT ANALYSIS

### A. Property information

The proposed serial subdivision is located on Lots 18A (29.82 acres) and 18B (18.01 acres) of the Las Soleras Master Plan. The Project is located south of Beckner Road between the roundabout at Walking Rain Road and the roundabout at the intersection of Beckner Road and the (platted and planned) Calle De La Alegria (See Figure 1: "*Aerial Map*"). Both parcels are zoned C-2 (General Commercial) and are located within the Suburban Archaeological Review District (See Figure 2: "*Zoning Map*").

**Figure 1: Aerial Map**



**Figure 2: Zoning Map**

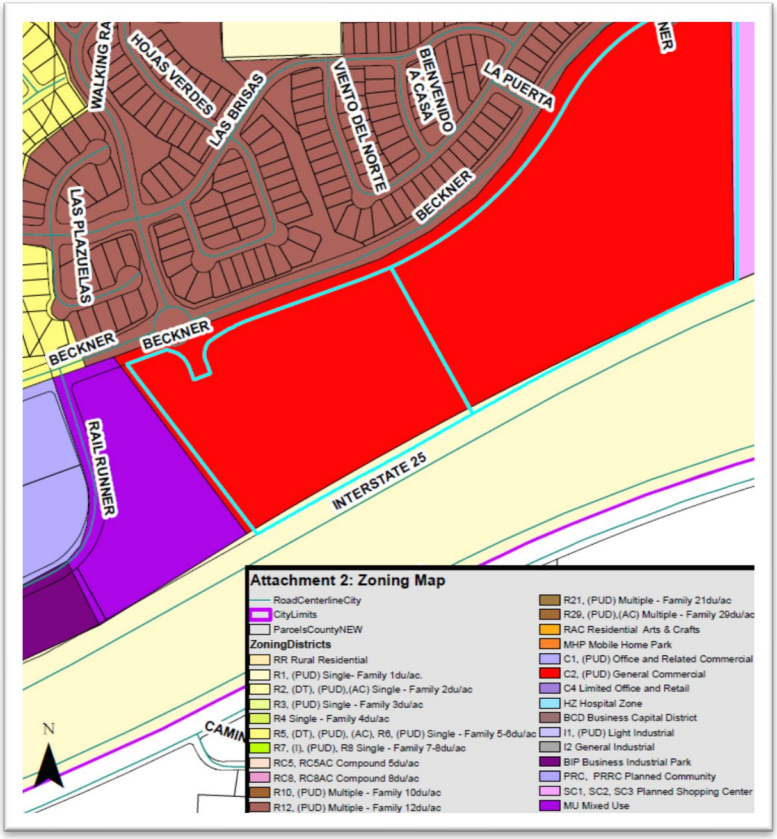


The Applicant proposes to create a total of six lots for a subdivision from the two existing lots. The proposed lots would be sized as described in Table 1 and Figure 3, below.

**Table 1: Proposed Lots**

| PROPOSED TRACT NAME | PROPOSED AREA (ACRES) |
|---|---|
| 18 B-1 | 1.157 |
| 18 B-2 | 9.737 |
| 18 B-3 | 2.0639 |
| 18 B-4 | 2.303 |
| 18 B-5 | 2.7404 |
| 18A (Phase 2) | 29.817 |

**Figure 3: Proposed Lots**

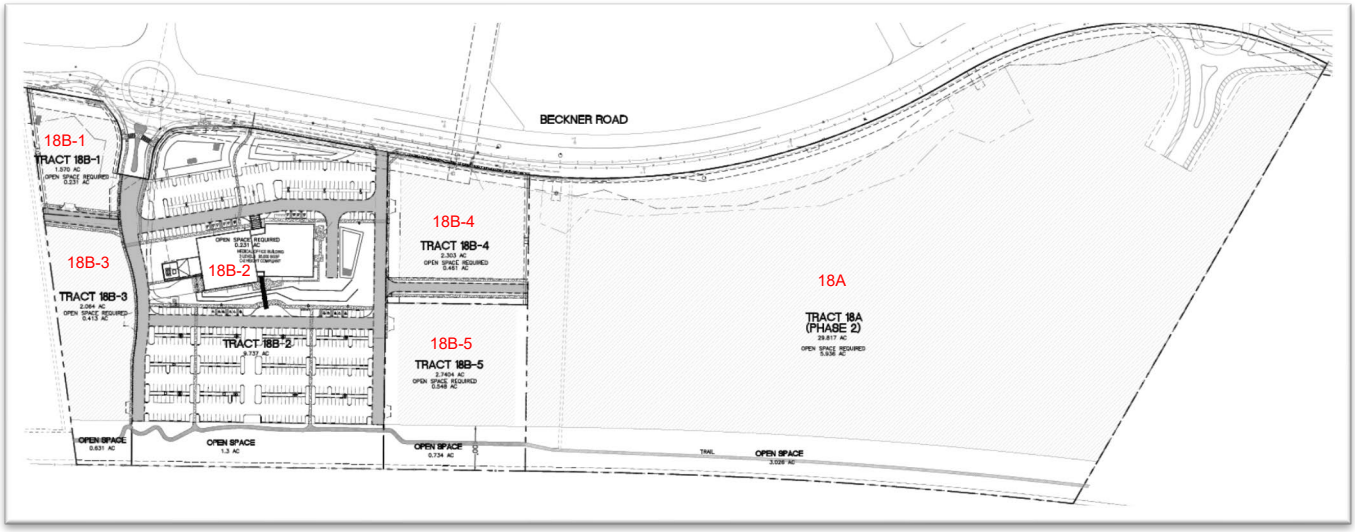


Tract 18 was divided into Tracts 18A and 18B on December 9, 2022, with the division recorded in the Office of the County Clerk on December 12, 2022. The proposed subdivision of Lot 18B into five lots triggers a 'Serial Subdivision,' which is defined as: *"…a proposed subdivision that occurs within five years after the approval of an earlier subdivision of any part of the affected land, shall be subject to the same standards and shall follow the same procedures as though the cumulative number of lots created by the successive plats were created by the currently proposed subdivision."*

Since the Applicant submitted the request to subdivide the subject parcels within five years of the initial division of Tracts 18A and 18B, the entirety of that original subdivision (comprised of 18A and all lots proposed for Lot 18B) must be included in the current Serial Subdivision Plat. The Applicant proposes two phases for this project: Phase I involves the subdivision of Tract 18B, and Phase II pertains to the subdivision and/or development of Tract 18A.

The current request is to subdivide and prepare Tracts 18B-1, 18B-2, 18B-3, 18B-4, and 18B-5 for development. While Tract 18A is officially part of this subdivision application ("Application"), it will remain largely unchanged during Phase I. Development plans for Tract 18A will be detailed and addressed in the future when it is developed as part of Phase II.

In 2023, the Planning Commission approved a Development Plan for Tract 18B-2 (4200 Beckner Road) as Case 2022-5621: Meridian Medical Office Building (also known as "Nexus Health"), which contains a 95,000SF medical office building and 470 parking spaces. Refer to the recorded Development Plan in Attachment D: *Applicant Materials*.

**B. Suburban Archaeological Review District**

The subject parcels lie within the Suburban Archaeological Review District. Chapter 14, SFCC, Article 14-3.13(B)(3) "*Suburban Archaeological Review District*" states:

> *In this district, an archaeological clearance permit shall be required prior to approval of the final development plan or plat for the following projects:*

*(a) All annexations, rezonings, subdivisions, planned unit developments, or other development requiring approval by the Planning Commission, having over ten (10) acres*

The subject properties exceed ten (10) acres and therefore require an archaeological clearance. The City of Santa Fe's Archeological Review committee granted archaeological clearance for the subject parcels on November 26, 2008 (See Attachment D: *Applicant Materials*).

**C. Open Space and Trails**

Article 14-12.1 defines Open Space as "*An outdoor area that permanently provides light and air and that satisfies, in whole or in part, the community's visual, psychological and recreational needs*. (Ord. No. 2014-31 § 51)." Sheet #2 ("*Overall Layout and Phasing Plan*") of the Applicant's Materials (see Attachment D) shows the minimum required open space for each proposed lot as 25%. However, this requirement can be reduced to 20% if the development incorporates a passive water harvesting concept as the primary component of its stormwater management. Staff will determine whether the open space requirement can be reduced to 20% based on engineering calculations from the landscape plan and the terrain management plan (see § 14-8.4(E) "Terrain and Stormwater Management" and § 14-8.4(E) "Water Harvesting and Irrigation Standards"). This will be determined by the City Engineer at the time of development for each of the proposed lots. Figure 4 ("*Open Space Calculations*"), below, excerpted from the Applicant Materials, shows both possibilities:

**Figure 4: Open Space Calculations**

| Open Space Calculations | | | | |
|---|---|---|---|---|
| Tract | Acreage | 25% Open Space Required (Acres) | 20% Open Space Required with passive water harvesting credit (Acres) | Notes |
| 18 B-1 | 1.157 | 0.289 | 0.231 | |
| 18 B-2 | 9.737 | - | 1.947 | Parcel built out - passive water harvesting employe |
| 18 B-3 | 2.0639 | 0.516 | 0.413 | |
| 18 B-4 | 2.303 | 0.576 | 0.461 | |
| 18 B-5 | 2.7404 | 0.685 | 0.548 | |
| 18 A | 29.817 | 7.454 | 5.963 | |

Article 14-7.5(D)(5) "*Nonresidential and Mixed Use Open Space Standards*" states:

*(5) The percentage of required open space shall be calculated on the basis of total lot area, and shall be no less than twenty-five percent unless the conditions described in Subsection 14-7.5(D)(6) are met; then the required open space may be reduced by a maximum of ten percent of the total lot size.*

Per the requirements of the Las Soleras Master Plan, the City's Parks and Trails Master Plan and the adopted Parks, Open Space & Trails Map, this Project requires the Applicant to construct a pedestrian trail system south of Beckner Road, within the 100-foot open space corridor, and built to the City's specifications. The trail is situated on the southern end of the proposed subdivision and will eventually connect to the I-25 regional trail system as neighboring developments are completed. See Sheet #3 ("*Access Exhibit*") of the Applicant's Materials (Attachment D) for details. The Applicant has proposed an eight-foot-wide trail along this corridor in the required location. This width may have been proposed in order to match existing adjacent trail connections. However, in Attachment A: *Conditions of Approval and Technical Corrections*, the Parks and Open Space Department and Metropolitan Planning Organization (MPO) have required that the proposed trail meet the current City specifications for trail construction, which is ten feet in width.

## D. Access and Street Design

The Application proposes two access points to Tracts 18B-1 through 18B-5 of the subdivision from Beckner Road via two roundabouts and several 26-foot-wide "lot access driveways" internal to the subdivision. Primary access will be via the newly constructed south leg of the roundabout at the intersection of Beckner Road and Walking Rain Road. This will be a "full service" access allowing both left and right, in-and-out movements. The secondary access is approximately 550' east of Walking Rain Road and will be limited to right-turn-in and right-turn-out movements from Beckner Road. See Figures 5 and 6, which are excerpted from Sheet #3 ("*Access Exhibit*") of the Applicant's Materials (see Attachment D), below. Cross-connection between the Nexus campus lots and future development on Tract 18A to the east will be provided by a 42' wide right-of way with sidewalk, near the property line between Tract 18 B-4 and 18 B-5 (see Road Section "G-G," below in Figure 7).

**Figure 5: Access Off Beckner Road and Internal Circulation**

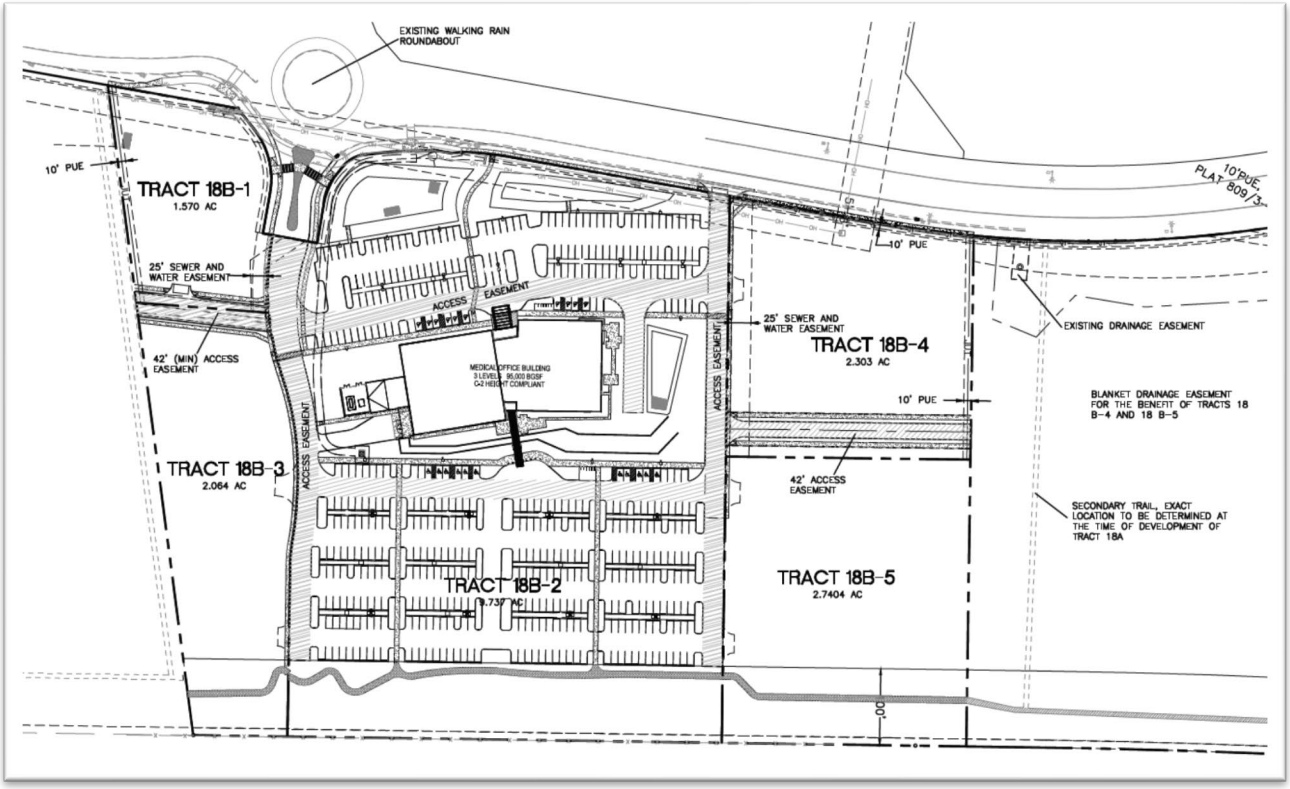


**Figure 6: Access Off Beckner Road (Roundabout) into Tract 18A**

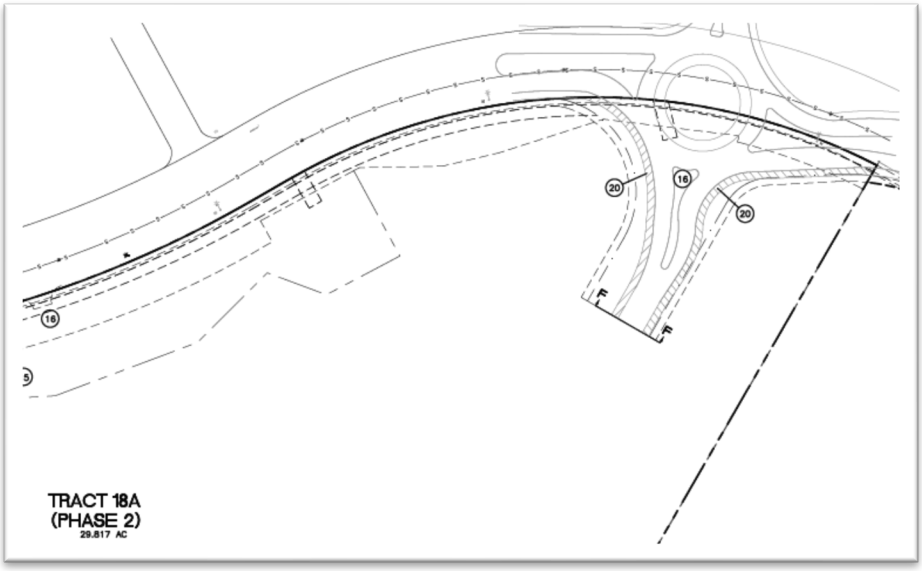


**Figure 7: Access Across Tract 18 B-4 and Tract 18A**

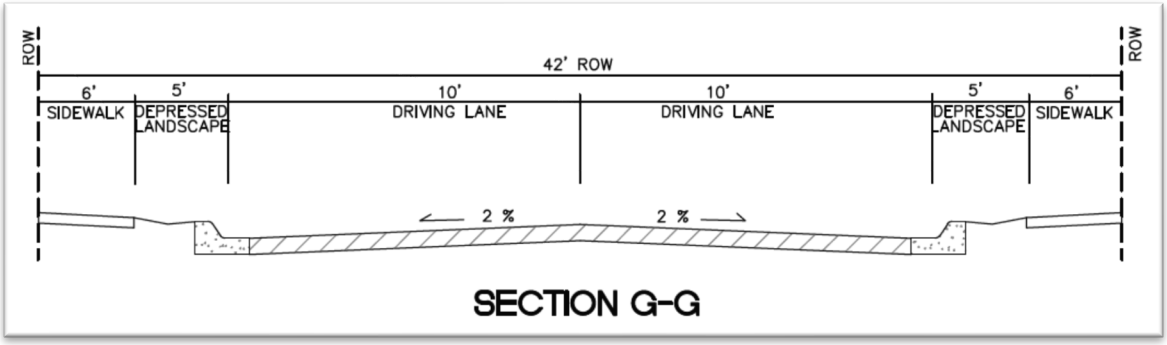


Per the *International Fire Code 2021*, the Fire Marshal requires 10' auto lanes for a total width of 20' driving surface. A condition of approval requires that, on the final subdivision plat, the Applicant will clearly indicate that all internal streets and roundabout rights-of-way will remain in private ownership and that an access easement will be dedicated to the City as well as a perpetual maintenance agreement. The proposed street design includes internal subdivision roads as a "lot access driveways." Although this road typology has no minimum required total right-of-way (ROW) width, the Applicant is proposing 26' wide ROWs (including sidewalks) for them. An exception to this width is the 42' ROW for a future roads that will run between Tracts 18B-1 and 18B-3 and between Tracts 18B-4 and 18B-5, connecting this subdivision to the future adjacent subdivision to the southwest and to the east. Both of these roads with 42' ROWs must be built as part of the initial infrastructure of the subdivision. In addition to requiring this wider ROW width for the future road, the City Engineer requires an access and utility easement with a minimum width of 42-feet for the roadway that runs between lots 18B-1 and 18B-2, connecting the future 42' ROW to the existing roundabout at Beckner Road.

**E. Traffic**

The Applicant submitted a traffic impact study (TIS) (see Attachment D). Figure 8, below, from the Applicant's "*Traffic Impact Study*", illustrates the TIS study area. This study area includes three existing signalized intersections, four existing unsignalized roundabout intersections, one existing, unsignalized driveway (Driveway "A") and three proposed unsignalized theoretical driveways (one is a roundabout) as listed below in Table 2.

**Table 2: Intersections Studied**

| INTERSECTION | SIGNAL |
|---|---|
| Beckner Road* / Cerrillos Rd. | Signalized |
| Herrera Dr. (Wellness Way) / Cerrillos Rd. | Signalized |
| Beckner Rd. / Richards Ave. | Signalized** |
| Beckner Rd./ Wellness Way | Unsignalized Roundabout |
| Beckner Rd. / Las Soleras Dr. | Unsignalized Roundabout |
| Beckner Rd./ Rail Runner Rd. | Unsignalized Roundabout |
| Beckner Rd. / Walking Rain Rd. | Unsignalized Roundabout |
| Beckner Rd. / Driveway "A" | Unsignalized – Right-in, Right-out only |
| Beckner Rd. / Driveway "B" | Unsignalized – Full Access |
| Beckner Rd. / Driveway "C" | Unsignalized – Full Access |
| Beckner Rd. / Driveway "D" | Unsignalized – Full Access Roundabout |

** Beckner Road is classified by the Metropolitan Planning Organization (MPO) as a minor arterial.*
*** Signal at Beckner Rd. / Richards Ave. to be constructed this year.*

The City Traffic Engineer reviewed the Applicant's TIS. The Engineer's comments recommend approval subject to technical corrections which are included in Attachment A*: Conditions of Approval and Technical Corrections*. Further, the TIS recommended a deceleration lane at "Driveway A" that leads into the existing Nexus Health development, but the City's Traffic Engineer did not include this requirement in their response. They did, however, note in the Technical Corrections (see Attachment A) that further traffic investigation and additional road improvements will be required in the future as the lots are individually developed.

**Figure 8: Traffic Study Area**

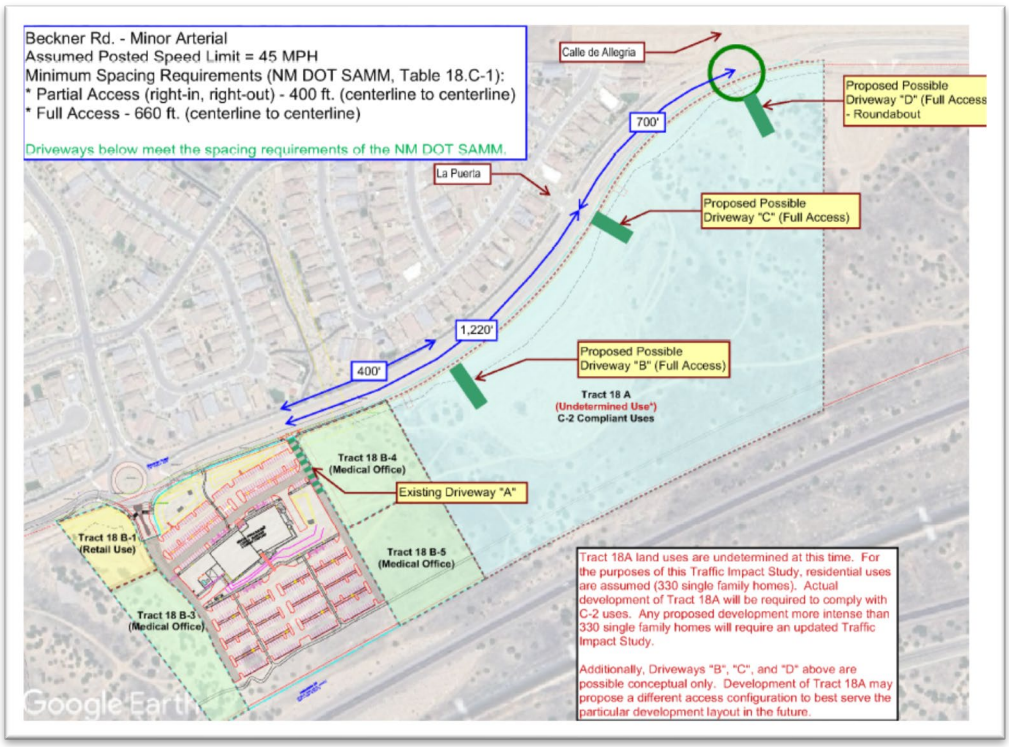


**F. Utilities**

The Project will connect to City services for water and sewer, connecting to eight-inch lines along Beckner Road. In compliance with Subsection 14-9.1(B), utility easements for new water and sewer lines will be established on the final subdivision plat along the east and west access drives from Beckner Road. Although Tract 18B-2 is fully developed, the new easements will accommodate future private water and sewer connections for parcels 18B-1, 18B-3, 18B-4 and 18B-5. All lines have been designed to support the anticipated capacities required for future developments within the subdivision. Dry utilities will also be accessed from Beckner Road, as no utilities exist within the highway ROW that runs along the back of the subject parcels (See Figure 9, below: "*City Utilities*").

1. Water: Two eight-inch (8") water lines will provide water service to all lots within the subdivision.

2. Sewer: Two eight-inch (8") sanitary sewer lines will provide water service to all lots within the subdivision.

The City Public Works' Water and Sewer Divisions have included conditions of approval regarding Water Plans, Agreements to Construct, easements, line extensions and other details that will be required at the time of each proposed lot's development. They can be found in Attachment A: *Conditions of Approval and Technical Corrections*.

**Figure 9: City Utilities**

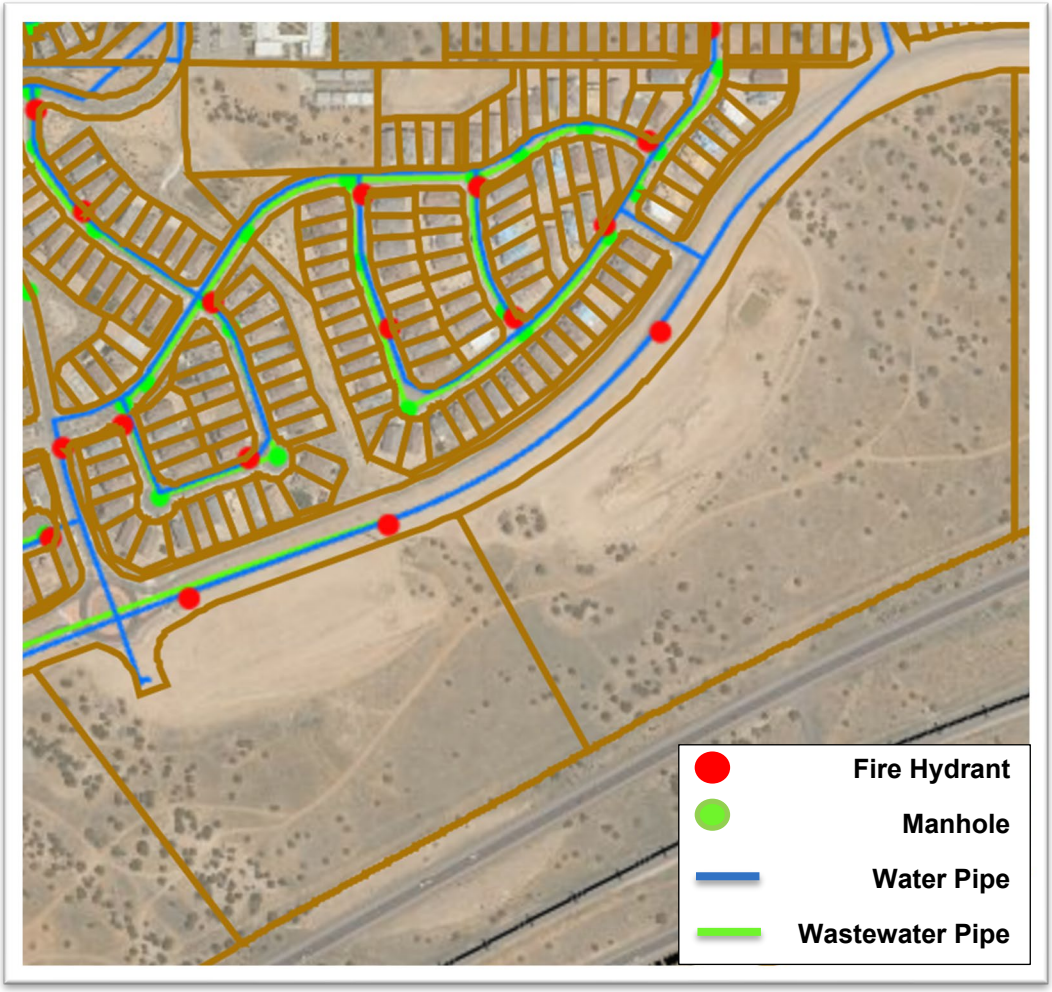


**G. Fire Prevention**

The Applicant proposes one new fire hydrant: in the center of the Nexus Health property "TRACT 18B-2." The Fire Division provided various additional technical corrections to be implemented when new construction or remodeling occurs on any of the new proposed lots (reference Attachment A: *Conditions of Approval and Technical Corrections)*.

**H. Terrain Management**

The subject parcels slope down from the south to the north, from I-25 toward Beckner Road. These parcels do not contain any areas that are larger than 1,000 SF with natural slopes exceeding 30%. Stormwater from the undeveloped portions of the site sheet-flows west and northwest as shown in Sheet #7 ("*Overall Layout and Phasing Plan*") of the Applicant's Materials (see Attachment D). Stormwater from the developed portions of the subject parcels is directed to the existing detention ponds, which then surface-discharges at the northwest corner of the site. Each of the individual lots will be responsible for additional stormwater control features for their proposed development at the time of Development Plan and/or building permit application.

## V. FINAL SERIAL SUBDIVISION PLAT

Section 14-3.7 governs the authority, procedures, and restrictions for the division of land. Subsection 14-3.7(B)(3)(d) states that "*The planning commission shall review the preliminary plat and other materials submitted*

*for conformity to this article, consider the land use director report and recommendations and require any changes deemed advisable and the kind and extent of improvements to be made by the subdivider."* The Planning Commission reviewed, considered, and required changes in accordance with this Subsection at the public hearing held on November 21, 2024. Further, Subsection 14-3.7(B)(4) states that "*The final plat shall conform substantially to the preliminary plat as approved*." Staff finds that the changes to the preliminary plat since the Planning Commission hearing have satisfied the required changes and that the Final Plat, as proposed, conforms substantially to the preliminary plat as approved. Therefore, this requirement has been met.

**Table 4: Approval Criteria (§ 14-3.7(C)(1))**

Please note that, where applicable, revised responses for the Final Plat phase are indicated in parentheses in the "Staff Response" sections below.

| | |
|---|---|
| **Criterion 1: In all subdivisions, due regard shall be shown for all natural features such as vegetation, water courses, historical sites and structures, and similar community assets that, if preserved, will add attractiveness and value to the area or to Santa Fe.** | **Criterion Met: (Yes/No) YES** |
| **Applicant's Response (Preliminary Subdivision Plat):** *"The Project shows due regard for natural features and enhancement of community assets through the preservation of open space, landscaping improvements, construction of trails along Beckner Road in accordance with the Las Soleras Master Plan."* | |
| **Staff Response (Preliminary Subdivision Plat)**: Staff reviewed the Application with due regard for natural features, including vegetation, watercourses, historic sites, structures, and similar community assets in the area, and finds that the request satisfies this criterion if the conditions of approval and technical corrections listed in Attachment A is met. The trail alignment, a community asset, is proposed in a location across the subject parcels that is beneficial for network connectivity. The trail will be constructed to current City-required standards. The layout of the proposed lots is also appropriate in respect to the existing structure (Nexus Health) and its parking area. | |
| **Criterion 2: The planning commission shall give due regard to the opinions of public agencies and shall not approve the plat if it determines that in the best interest of the public health, safety or welfare the land is not suitable for platting and development purposes of the kind proposed. Land subject to flooding and land deemed to be topographically unsuited for building, or for other reasons uninhabitable, shall not be platted for residential occupancy, nor for other uses that may increase danger to health, safety or welfare or aggravate erosion or flood hazard. Such land shall be set aside within the plat for uses that will not be endangered by periodic or occasional inundation or produce unsatisfactory living conditions. See also Section 14-5.9 (Ecological Resource Protection Overlay District) and Section 14-8.3 (Flood Regulations).** | **Criterion Met: (Yes/No) YES** |

**Applicant's Response (Preliminary Subdivision Plat):**
*"The site is not located in a designated flood plain. Land is well suited for development."*

**Staff Response (Preliminary Subdivision Plat)**:
The FEMA 100-year flood zone is not present on any area of the subject parcels. The proposed subdivision is generally flat, with the exception of the following areas of human-made slopes exceeding 30%: running along the southwest boundary of Tract 18B-1, 18B-4 and 18B-5; and bisecting the middle of Tract 18B-3. The proposed lot layout has been reviewed by the Development Review Team (DRT) in conjunction with the relevant City Code requirements. The DRT, as representatives of their agencies, considered the proposal and have not raised any objection to platting the proposed commercial subdivision nor have they identified any ways in which the proposed development would endanger health, safety or welfare, or aggravate erosion or flood hazard.

| **Criterion 3: All plats shall comply with the standards of Chapter 14, Article 9 (Infrastructure Design, Improvements and Dedication Standards).** | **Criterion Met: (Yes/No) YES** |
|---|---|

**Applicant's Response (Preliminary Subdivision Plat):**
*"The Subdivision Plat for Las Soleras Tract 18B adheres to the standards outlined in Chapter 14, Article 9. For detailed compliance of the plat and acknowledgments related to Dedication and Affidavit, please reference the Serial Subdivision Plat Las Soleras Tract 18B."*

**Staff Response (Final Subdivision Plat)**:
The approved preliminary plat identified the locations and roadbed/surface composition of existing and proposed roadway improvements; wet and dry utility connections and lines; and utility easements, as is required at the preliminary plat stage of the subdivision process. Since neither the preliminary nor the final subdivision plat include any new specific land uses for the proposed lots, some infrastructure elements such as parking area configurations are not shown in the current Application. These elements will be reviewed for compliance with Chapter 14, Article 9, at a later time when specific development is being proposed and construction drawings are produced. Staff finds that, subject to the conditions of approval and required technical corrections, the proposed final subdivision plat complies with the standards of Chapter 14, Article 9 (Infrastructure Design, Improvements, and Dedication Standards).

| **Criterion 4: A plat shall not be approved that creates nonconformity or increases the extent or degree of an existing nonconformity with the provisions of Chapter 14 unless a variance is approved concurrently with the plat.** | **Criterion Met: (Yes/No) YES** |
|---|---|

**Applicant's Response (Preliminary Subdivision Plat):**
*"The property contains no existing nonconformity. No nonconformity is being created with this Subdivision Plat."*

**Staff Response (Final Subdivision Plat)**:
Staff finds that there are no existing or proposed nonconformities on the subject property. Approval of the subdivision and final plat, subject to the conditions of approval and technical corrections as described in Attachment A, would not create nonconformities under Chapter 14.

| **Criterion 5: A plat shall not be approved that creates a nonconformity or increases the extent or degree of an existing nonconformity with applicable provisions of other chapters of the Santa Fe City Code unless an exception is approved pursuant to the procedures provided in that chapter prior to approval of the plat.** | **Criterion Met: (Yes/No) YES** |
|---|---|
| **Applicant's Response (Preliminary Subdivision Plat):** *"The property contains no existing nonconformity. No nonconformity is being created with this Subdivision Plat."* | |
| **Staff Response (Final Subdivision Plat)**: Staff finds that the proposed Application does not create or increase the intensity of any non-conformity with other chapters of the City Code. No variances to the applicable provisions of the City Code are proposed or required. If the conditions of approval and technical corrections as described in Attachment A is met, the subdivision and final plat would not create nonconformities to these provisions. | |

## VI. EARLY NEIGHBORHOOD NOTIFICATION

The Applicant conducted an Early Neighborhood Notification (ENN) meeting virtually via Zoom Video Communications on November 27, 2023. The Applicant presented a slide show that featured conceptual project plans and other relevant information. Attendees included the project team and City staff, but no members of the public were in attendance.

## VII. ATTACHMENTS

A. Conditions of Approval and Technical Corrections (including original Development Review Team (DRT) Comments)
B. Planning Commission Findings of Fact and Conclusions of Law
C. Early Neighborhood Notification Meeting Materials
D. Applicant Materials

APPROVED AS TO FORM BY THE PLANNING AND LAND USE DEPARTMENT:

| **Title** | **Name** | **Initials** |
|---|---|---|
| Department Director | Heather L. Lamboy, AICP | |
| Assistant Department Director | Maggie Moore | |
| Interim Planning Manager | Daniel A. Esquibel | |
| Long-Range Strategic Planner | Janice Biletnikoff, AICP | JIB |

March 6, 2025

# Planning Commission

Case 2024-9585: 4000 & 4200 Beckner Road Meridian Final Serial Subdivision Plat

# ATTACHMENT A

Conditions of Approval and Technical Corrections

| # | REQUIREMENT TO BE MET | DEPARTMENT | TO BE COMPLETED BY: |
|---|---|---|---|
| **CONDITIONS OF APPROVAL** | | | |
| **1** | Shall comply with *International Fire Code 2021* and other requirements. | **Fire Prevention Division** | **At the time of new construction** |
| **2** | An approved Water Plan will be required for all new public water infrastructure and fire services. | **Public Utilities/Water Division** | **Prior to Development Plan approval for each lot** |
| **3** | An approved Agreement to Construct and Dedicate (ACD) will be required for new public water infrastructure and fire services. | **Public Utilities/Water Division** | **Prior to building permit approval** |
| **4** | Any re-grading of site over existing water mains shall maintain a minimum of 4 feet of cover and not exceed 5 feet of cover. Depth of existing main to be adjusted to maintain a minimum of 4 feet of cover and not exceed 5 feet of cover if site grading impacts these depth requirements. | **Public Utilities/Water Division** | **At the time of development** |
| **5** | Each lot shall be served by separate water service. | **Public Utilities/Water Division** | **At the time of development** |
| **6** | Water or utility easements shall be provided to allow rear lots (18B-3, 18B-5) access to existing water infrastructure. | **Public Utilities/Water Division** | **Prior to Recordation of Final Plat** |
| **7** | Depict the public trail on the final plat and provide designs, demonstrating compliance with the City's trail construction standards, including but not limited to a width of ten feet for the trail surface. | **Parks & Open Space/Public Works** | **Prior to Recordation of Final Plat** |
| **8** | The Applicant shall modify the "Dedication and Affidavit" section of the plat to clearly state that: (1) all roads and easements within the subdivision shall remain in private ownership and be maintained solely by the lot owners of the subdivision; (2) all roads and utility easements shall be designated for | **Land Use** | **Prior to Recordation of Final Plat** |

| | | | |
|---|---|---|---|
| | public use; and (3) a maintenance agreement shall be developed, executed, and recorded with the plat, establishing the responsibilities for maintenance of all private roads and utility easements, including provisions for enforcement and funding mechanisms. The revised "Dedication and Affidavit" shall be submitted for review and approval by the Planning Department prior to recordation of the plat. | | |
| **9** | The 42' wide rights-of-way between Tracts 18B-1 and 18B-3, and between Tracts 18B-4 and 18B-5, shall be constructed as roads as part of the initial infrastructure of the subdivision. Both of the roads shall be included in the Financial Guaranty for the subdivision. | **Land Use** | **Prior to Recordation of Final Plat** |
| **10** | Demonstrate compliance with each of the technical corrections as described below. | **Various departments** | **As described below** |
| **TECHNICAL CORRECTIONS** | | | |
| **1** | Lot specific traffic analysis will be required at the time the proposed lots (18B-1 and 18B-3) are developed. | **Wilson & Company Traffic Engineer** | **Prior to development of Tracts 18B-1 and 18B-3** |
| **2** | The access points via the roundabout for the proposed Coffee/Donut shop and medical facility driveway on the opposite side may need to be analyzed further depending on the actual traffic generated since the proximity of the proposed entrance to the business may create a backup of the roundabout. As shown, it does not look like there may be enough spacing between the proposed driveway and roundabout entrance. The access to the business should be moved further south of the roundabout closer to the southern edge of the property showing an actual distance. | | |
| **3** | Public water main extensions shall remain within pavement wherever practical. | **Public Utilities/Water Division** | **Prior to Water Plan approval** |

March 6, 2025

# Planning Commission

Case 2023-9585: 4000 & 4200 Beckner Road Meridian Final Serial Subdivision Plat

# ATTACHMENT B

Planning Commission Findings of Fact and Conditions of Law

# City of Santa Fe
# Planning Commission
# Findings of Fact and Conclusions of Law

**Case #2023-7752**
**4000 and 4200 Beckner Road**
**Owner/Applicant's Name -** Santa Fe Las Soleras Medical Development LLC, Las Soleras Center LLC, and Las Soleras Village LLC
**Agent's Name -** Orion West LLC

THIS MATTER came before the Planning Commission (Commission) for hearing on November 21, 2024 (Hearing), upon the application (Application) of Orion West LLC, agent for Santa Fe Las Soleras Medical Development LLC, Las Soleras Center LLC, and Las Soleras Village LLC (Applicant).

The Applicant requested the Commission's approval of a preliminary serial subdivision plat for six (6) non-residential lots on approximately 47.83 acres (Project). The property is located at 4000 and 4200 Beckner Road (Property) and is zoned C-2 (General Commercial).

After conducting a public hearing and having heard from staff and all interested persons, the Commission hereby FINDS, as follows:

**FINDINGS OF FACT**

1. At the Hearing, the Commission received reports from staff, testimony and evidence from the Applicant, and testimony offered by any interested members of the public.
2. The Santa Fe City Code (SFCC) 1987 Section 14-3.1 sets out certain procedures to be followed on the Application, including, without limitation, (a) a pre-application conference [SFCC 1987 § 14-3.l(E)]; (b) an Early Neighborhood Notification (ENN) meeting [SFCC 1987 § 14-3.1(F)(2)(a)(v)]; and (c) compliance with notice and public hearing requirements [SFCC 1987 § 14-3.1(H)-(I)].
3. The Applicant attended a pre-application conference on June 22, 2023, in accordance with SFCC 1987 Section 14-3.1(E).
4. The Applicant conducted one ENN on November 27, 2023, virtually via Zoom. A representative of the Applicant and City staff attended the ENN meeting. There were no members of the public in attendance.
5. Pursuant to SFCC Sections 14-2.3(C)(1) and 14-3.7(B)(3)(d), the Commission has the authority to review and approve or disapprove preliminary serial subdivision plats.

6. Planning and Land Use Department staff (Staff) reviewed the Application, related materials, and information submitted by the Applicant for conformity with applicable SFCC requirements. Staff provided the Commission with a written report of its findings (Staff Report), which evaluates the factors relevant to the Application.
7. Staff recommended that the Commission approve the preliminary serial subdivision plat, subject to certain conditions and technical corrections set out in the Staff Report and attachments.
8. SFCC Section 14-3.7(B) establishes certain procedures for preliminary serial subdivision plat approval including, without limitation, a public hearing by the Commission, review of the preliminary plat, and a decision based on the criteria set out in SFCC Section 14-3.7(C).
9. SFCC Section 14-3.7(B)(3)(b) requires the Applicant to submit a preliminary plat prepared by a professional land surveyor, together with improvement plans and other specified supplementary material that demonstrates conformance with the standards of SFCC Section 14-9 (Submittal Requirements).
10. SFCC Section 14-3.7(C) sets out approval criteria and requires the Commission to make complete findings of fact sufficient to show that these criteria have been met before approving a preliminary subdivision.
11. Pursuant to SFCC Section 14-3.7(C)(1), the Commission finds that due regard has been shown for all natural features such as vegetation, water courses, historical sites and structures, and similar community assets. The City approved Archaeological Clearance for the property on November 26, 2008.
12. The land is suitable for platting and development purposes of the kind proposed. No portion of the proposed subdivision falls within the 100-year flood zone.
13. The Project, including the design of streets, utility and access easements, drainage, sidewalks and crosswalks complies with the infrastructure design, improvement, and dedication standards set forth in SFCC Section 14-9, subject to conditions and technical corrections identified within the staff report and the additional condition imposed at the public hearing.
14. The Project does not create any nonconformities or increase any existing nonconformities.

**CONCLUSIONS OF LAW**

Under the circumstances and given the evidence and testimony submitted during the hearing, the Commission CONCLUDES as follows:

1. Pursuant to SFCC Section 14-3.1, all procedures regarding the pre-application conference, ENN meeting, notice, and public hearing requirements have been followed.
2. Pursuant to SFCC 1987 Section 14-3.1(H)(1), notice of the ENN meeting was properly given. The Applicant effected notice by: mailing out notice via first-class mail to property owners within 300 feet of the subject property on October 23,

2024; e-mailing neighborhood associations within 300 feet; and posting the required City sign on the property from October 23, 2024 to November 7, 2024.

3. Pursuant to SFCC 1987 Section 14-3.1(F), the Applicant conducted an ENN meeting. The Applicant conducted one ENN on November 27, 2023. The ENN meeting was conducted virtually via Zoom. The ENN meeting was attended by a representative of the Applicant and City staff. There were no members of the public in attendance.
4. Pursuant to SFCC Sections 14-2.3(C)(1) and 14-3.7(B)(3)(d), the Commission has the authority to review and approve or disapprove preliminary serial subdivision plats.
5. The Commission has the authority to review and approve the preliminary serial subdivision plat subject to conditions, technical corrections within the staff report and packet to the Commission and adding the additional condition stating that *"Dedication of internal subdivision roads be addressed during Final Plat."*
6. Pursuant to SFCC Section 14-3.7(C)(2), the Commission finds that the land is suitable for platting and development purposes of the kind proposed.
7. Pursuant to SFCC Section 14-3.7(C)(3), the Commission finds that the plat complies with the infrastructure design, improvement, and dedication standards set forth in SFCC Section 14-9, subject to conditions and technical corrections identified within the staff report and the additional condition imposed at the public hearing.
8. Pursuant to SFCC Section 14-3.7(C)(4)-(5), the Commission finds that the plat does not create any nonconformities or increase any existing nonconformities.
9. The Applicant met the applicable Submittal Requirements.
10. The Project meets all applicable criteria.
11. The preliminary serial subdivision plat should be approved because all applicable code requirements and criteria for preliminary serial subdivision plat approval have been met.

**WHEREFORE, IT IS ORDERED ON THE 6TH DAY OF FEBRUARY 2025 BY THE PLANNING COMMISSION OF THE CITY OF SANTA FE:**

Considering the foregoing findings and conclusions, the Commission approves the preliminary subdivision plat for the Project, subject to the Conditions and the technical corrections set forth in the Staff Report and attachments. Final decision was rendered on December 26, 2024. Approval of the preliminary serial subdivision plat will expire three years after this date unless the plat is filed for record with the county clerk, or an extension is granted under SFCC Section 14-3.19.

Janet Clow
Chairperson

2/12/2025
Date:

FILED:

ANDREA SALAZAR (Feb 25, 2025 13:35 MST)

Andrea Salazar
City Clerk

XIV

Feb 25, 2025
Date:

APPROVED AS TO FORM:

Rebecca Mnuk-Herrmann
Assistant City Attorney

2/11/2025
Date:

March 6, 2025

# Planning Commission

Case 2023-9585: 4000 & 4200 Beckner Road Meridian Final Serial Subdivision Plat

# ATTACHMENT C

ENN Early Neighborhood Notification Meeting Materials

# EARLY NEIGHBORHOOD NOTIFICATION MEETING

**Request for Staff Attendance**

## Project Information

Project Name: Las Soleras Meridian Medical Center Subdivision

Address: 4000 & 4200 Beckner Road Parcel Size: 47.83 acres

Zoning: C-2 Future Land Use: Uses allowed in a C-2 District

Preapplication Conference Date: June 22, 2023

Detailed Project Description: Subdivision of Las Soleras Master Plan parcels 18B (18.01 acres) and 18A (29.82 acres) from two to six legal parcels per the attached site plan Exhibit.

## 18B 18.01 acres Property Owner Information

Name: Santa Fe Las Soleras Medical Development LLC ATTN: Mike Conn

Address: 500 YGNACIO VALLEY ROAD, SUITE 325, WALNUT CREEK, CA 94596

Phone: 925-302-1400 E-mail Address: mconn@mpcca.com

## 18A 29.82 acres Property Owner Information

Name: Las Soleras Center LLC and Las Soleras Village LLC ATTN: Gordon Skarsgard

Address: 8220 San Pedro NE Suite 120/ Albuquerque, NM 87113

Phone: 505-998-9091 E-mail Address: skip@ziarisingnm.com

## Applicant/Agent Information (if different from owner):

Name: Orion West, LLC, ATTN: Brian Nenninger

Address: 2213 Brother's Road, STE#800, Santa Fe, NM 87505

Phone: 832-338-0364 E-mail Address: brian.nenninger@orion-west.com

## Agent Authorization (if applicable):

I am/We are the owner(s) and record title holder(s) of the property located at: 4000 & 4200 Beckner Road

I/We authorize Orion West, LLC, Attn: Brian Nenninger to act as my/our agent to execute this application.

Signed: Mike Conn Date: 09/01/2023

Signed: Gordon L. Skarsgard Date: 10/19/2023

## Proposed ENN Meeting Dates:

| *Provide 2 options:* | *Preferred Option* | *Alternative* |
|---|---|---|
| DATE: | 15 Nov 2023 | 21 Nov 2023 |
| TIME: | 5:30 pm | 5:30 pm |
| LOCATION: | Zoom | Zoom |

# ENN GUIDELINES

## Applicant Information

Project Name: Las Soleras Meridian Medical Center Subdivision

Name: Orion West, LLC ATTN: Brian Nenninger
*Last* *First* *M.I.*

Address: PO Box 5744
*Street Address* *Suite/Unit #*

Santa Fe NM 87502
*City* *State* *ZIP Code*

Phone: 832-338-0364 E-mail Address: brian.nenninger@orion-west.com

*Please address each of the criteria below. Each criterion is based on the Early Neighborhood Notification (ENN) guidelines for meetings and can be found in Section 14-3.1(F)(5) SFCC 2001, as amended, of the Santa Fe City Code. A short narrative should address each criterion (if applicable) in order to facilitate discussion of the project at the ENN meeting. These guidelines should be submitted with the application for an ENN meeting to enable staff enough time to distribute to the interested parties. For additional detail about the criteria, consult the Land Development Code.*

**(a) EFFECT ON CHARACTER AND APPEARANCE OF THE SURROUNDING NEIGHBORHOODS** ***For example: number of stories, average setbacks, mass and scale, landscaping, lighting, access to public places, open spaces, and trails.***

Project Summary: The project applicants are Santa Fe Las Soleras Medical Development LLC, Las Soleras Center LLC, and Las Soleras Village LLC ("Applicants"). Applicants propose to subdivide parcel 18B (18.01-acres) and parcel 18A (29.82-acres) into six separate lots as shown in Exhibit A: *Subdivision Site Plan.* The proposed 9.742-acre lot (18 B-2) will contain the approved 95,000 sf Meridian Medical Office Building and parking associated therewith currently under construction.

At this time, the improvements to be constructed on the five undeveloped parcels are unknown as there are no end users identified. All six parcels are zoned C-2 under the Las Soleras Master Plan and will be entitled, permitted, and approved by the City of Santa Fe as each parcel is developed. The number of stories, massing, and setbacks for the buildings to be constructed are unknown. The subdivision is expected to provide a variety of healthcare and commercial services to the residents of the community and the greater City of Santa Fe. Residential development is also a potential use as allowed for in C-2 districts.

Like the Meridian Medical Office project, future parcels will be architecturally pleasing in design in order to enhance the area brand and identify as a desirable place to work and live in the City of Santa Fe.

**(b) EFFECT ON PROTECTION OF THE PHYSICAL ENVIRONMENT** ***For example: trees, open space, rivers, arroyo, floodplains, rock outcroppings, escarpments, trash generation, fire risk, hazardous materials, easements, etc.***

Once developed the subdivision is expected to mitigate fire risk by reducing brush. Development of the new parcels will bring enhanced landscaping including new trees to screen parking and drive areas. Plant selections will be drought tolerant to respect low water use mandates. There are no arroyos, rivers, rock outcroppings or escarpments on the proposed subdivision site.

***(c)*** **IMPACTS ON ANY PREHISTORIC, HISTORIC, ARCHAEOLOGICAL OR CULTURAL SITES OR STRUCTURES, INCLUDING ACEQUIAS ANO THE HISTORIC DOWNTOWN** ***For example: the project's compatibility with historic or cultural sites located on the property where the project is proposed.***

An archeological clearance for the Las Soleras Master Plan area was received in 2015. No further archaeological clearance work is required. The project area is not a known cultural site. The site is vacant land hence there are no historical building impacts.

***(d)*** **RELATIONSHIP TO EXISTING DENSITY AND LAND USE WITHIN THE SURROUNDING AREA AND WITH LAND USES AND DENSITIES PROPOSED BY THE CITY GENERAL PLAN** ***For example: how are existing City Code requirements for annexation and rezoning, the Historic Districts, and the General Plan and other policies being met.***

The subdivision will not impact currently allowed density or land uses as the zoning remains unchanged and governed by the underlying C-2 general commercial district. All density and land use requirements enforced today will remain enforce upon the creation of the subdivision. In addition, there is a scale and usability advantage to the smaller developments this subdivision will facilitate. Building scale, elevations, and design will echo a modern southwestern desert theme with respect to massing, fenestration, materials, color, texture, shading devices, and lighting. Input from the surrounding community via the Development Plan application process and associated ENNs will be incorporated into each project as development occurs in the subdivision.

***(e)*** **EFFECTS ON PARKING, TRAFFIC PATTERNS, CONGESTION, PEDESTRIAN SAFETY, IMPACTS OF THE PROJECT ON THE FLOW OF PEDESTRIAN OR VEHICULAR TRAFFIC AND PROVISION OF ACCESS FOR THE DISABLED, CHILDREN, LOW-INCOME AND ELDERLY TO SERVICES** ***For example: increased access to public transportation, alternate transportation modes, traffic mitigation, cumulative traffic impacts, pedestrian access to destinations and new or improved pedestrian trails.***

The smaller sites generated by the subdivision is within the baseline analysis for the Las Soleras Master Plan. The subdivision is expected to facilitate the Las Soleras Master Plan by further enhancing pedestrian amenities by expanding the pedestrian trail and sidewalk network envisioned by the Las Soleras Master Plan to enhance connectivity of the area. Street and drive capacity after the implementation of any infrastructure improvements associated with the subdivision is expected to be sufficient for future traffic generated by the development of subdivision parcels. Once the subdivision is created, future development may be subject to further traffic analysis in accordance with the City of Santa Fe's municipal code.

***(f)*** **IMPACT ON THE ECONOMIC BASE OF SANTA FE** ***For example: availability of jobs to Santa Fe residents; market impacts on local businesses; and how the project supports economic development efforts to improve living standards of neighborhoods and their businesses.***

The parcels created by this subdivision are expected to expand on the spillover economic benefits to the community to be realized by the Meridian Medical Office Building. This is by virtue of the high earning employee base projected at occupancy. With respect to the medical office parcel, the number of employees (including physicians, nurses, consultants, contractors, administrative and janitorial) for the Meridian Office project are estimated to peak at 150 full time equivalents. The development of the medical office parcels will conservatively add another seventy-five full-time equivalents upon build out. The development of the four additional parcels will generate other benefits that include construction trade jobs, increased taxes, and development fees, all of which will confer direct and indirect economic benefit to Santa Fe residents. The project's employee base will stimulate the surrounding housing market as well, enhancing the resale value of the existing housing stock. The subdivision will be an important addition to the surrounding community in that it further contributes to the vision of the Las Soleras Master Plan as originally conceived.

***(g)*** **EFFECT ON THE AVAILABILITY OF AFFORDABLE HOUSING AND AVAILABILITY OF HOUSING CHOICES FOR ALL SANTA FE RESIDENTS** ***For example: creation, retention, or improvement of affordable housing; how the project contributes to serving different ages, incomes, and family sizes; the creation or retention of affordable business space.***

The subdivision will generate a variety of uses and an employee mix that is not expected to materially impact the city's affordable housing stock. This said, any future residential development will comply with the City of Santa Fe's affordable housing ordinance.

***(h)*** **EFFECT UPON PUBLIC SERVICES SUCH AS FIRE, POLICE PROTECTION, SCHOOL SERVICES AND OTHER PUBLIC SERVICES OR INFRASTRUCTURE ELEMENTS SUCH AS WATER, POWER, SEWER, COMMUNICATIONS, BUS SYSTEMS, COMMUTER OR OTHER SERVICES OR FACILITIES** ***For example: whether or how the project maximizes the efficient use or improvement of existing infrastructure; and whether the project will contribute to the improvement of existing public infrastructure and services.***

The subdivision will be served by the existing water and sewer infrastructure built to accommodate the uses planned within the Las Soleras Master Plan, as well as the existing fire, police, and emergency services. The site is located on the Santa Fe Trails bus route system. A bus stop is currently within walking distance of the site. However, a new bus stop will be considered as part of this subdivision application.

**(i) IMPACTS UPON W ATER SUPPLY, AVAILABILITY AND CONSERVATION METHODS For example: conservation and mitigation measures; efficient use of distribution lines and resources; effect of construction or use of the project on water quality and supplies.**

Development on the created parcels will implement water conservation measures as mandated by City of Santa Fe both domestic and landscape irrigation uses. New development within the subdivision will have to secure and deed water right to the City of Santa Fe as a credit to offset the new water use.

**(j) EFFECT ON THE OPPORTUNITIES FOR COMMUNITY INTEGRATION AND SOCIAL BALANCE THROUGH MIXED LAND USE, PEDESTRIAN ORIENTED DESIGN, AND LINKAGES AMONG NEIGHBORHOODS AND RECREATIONAL ACTIVITY AND EMPLOYMENT CENTERS For example: how the project improves opportunities for community integration and balance through mixed land uses, neighborhood centers and/or pedestrian-oriented design.**

The subdivision will bring commercial/business park uses that will enhance community integration by building out and implementing the vision of the Master Plan, which identifies commercial development for this land. The Master Plan, taken in its totality, provides an integration of residential and commercial land uses to best serve the community. The subdivision is anchored by the Meridian Medical Office project and will be a meaningful 'employment center' within Las Soleras and the Southside of Santa Fe.

***(k)*** **EFFECT ON SANTA F E'S URBAN FORM;** ***For example: how are policies of the existing City General Plan being met? Does the project promote a compact urban form through appropriate infill development? Discuss the project's effect on intra-city travel and between employment and residential centers.***

As it facilitates commercial infill by smaller groups, the proposed subdivision enables the responsible build out of important components of the approved Las Soleras Master Plan. The proximity of the project to residential uses is a mutually symbiotic relationship, allowing employees to potentially live near work, creating important work-life linkages. The subdivision will offer Providers an opportunity to build advanced medical practices serving the greater Santa Fe community.

# Santa Fe Public Schools

***Property & Asset Management***
***Residential Development Impact Information Form***
***School Notification as required by City Ordinance 14-8.18 AFCC 1987***

1. Project Name: Las Soleras Meridian Medical Center Subdivision
2. Location of Property: 4000 and 4200 Beckner Road
3. Owner/Agent Name: ORION West LLC
   Mailing Address: PO Box 5744, Santa Fe, NM 87502-5744
   Phone & Fax: 832.338.0364
4. Unit Matrix

**PROJECT EFFECT ON STUDENT POPULATION**

| Unit Type | Unit Quantity | Average Price |
|---|---|---|
| Single Family (detached)<br>Single Family (attached)<br>Townhome/ Apartment<br>Multi-Family | unknown | |
| Commercial C-2 Subdivision | N/A | |

5. Elementary School Zone for Proposed Development: Cesar Chavez Elementary
6. Middle School Zone for Proposed Development: Ortiz Middle School
7. High School Zone for Proposed Development: Capital High School
8. Build out Rates (Year/s; #/yr): N/A/C-2 Subdivision Application

**Educational Services Center**
610 Alta Vista
Santa Fe, NM 87505
Telephone (505) 467-2000
www.sfps.info

For questions & submittal, contact:
Santa Fe Public Schools, Property & Asset Management,
2195 Zia Road, Santa Fe NM 87505
505 467 3400

**ORION West LLC**
Development | Land Use | Planning | Project Management
PO Box 5744, Santa Fe, NM 87502-5744

# EARLY NEIGHBORHOOD NOTIFICATION MEETING

October ??, 2023

**RE: DATE: November ??, 2023**
**Early Neighborhood Notification ("ENN") Meeting: 4200 and 4000 Beckner Road, Santa Fe, NM 87507**

Dear Neighbor:

This letter is being sent as notice of a neighborhood meeting to discuss the proposed application to the City of Santa Fe ("City") for approval to subdivide an 18.01-acre parcel known as parcel 18B and a 29.82-acre parcel known as 18A into six legal lots. The parcels are located within the Las Soleras Master Plan and will be home to the now under construction Meridian Office Building. The subject property is located at 4000 and 4200 Beckner Road and is zoned General Commercial ("C-2"). Please refer to the enclosed Vicinity Map and Subdivision Site Plan.

The application to be submitted to the City of Santa Fe will request approval of a "serial subdivision" which will create six successive lots from existing Las Soleras parcels 18B and 18A. Beyond the subdivision, no new Development Plan or related project approvals are being requested with this application.

In accordance with the City's Early Neighborhood Notification requirements, this is to inform you that an ENN meeting is scheduled for:

**Topic:** Serial Subdivision of Las Soleras parcels 18B and 18A (4200 and 4000 Beckner Road).

**When:** November ??, 2023, 5:30 PM Mountain Time

**Where:** https://santafe.primegov.com/public/portal

Early Neighborhood Notification is intended to provide for an exchange of information between prospective applicants for development projects and the project's neighbors before plans become too firm to respond meaningfully to community input. Enclosed, please find a vicinity map and proposed site plan as well as the responses to the ENN criteria. If you have any questions or comments, please contact me.

Persons with disabilities in need of special accommodations, are hearing impaired, or need an interpreter, please contact the Land Use Department, Geraldine Gurule, Project Administrator, at (505) 955-6820 or email at: gagurule@santafenm.gov five (5) days prior to the meeting date.

Regards,

Brian Nenninger, P.E.
Orion West, LLC

Enclosures: ENN Guidelines, Vicinity Map and Site Plan

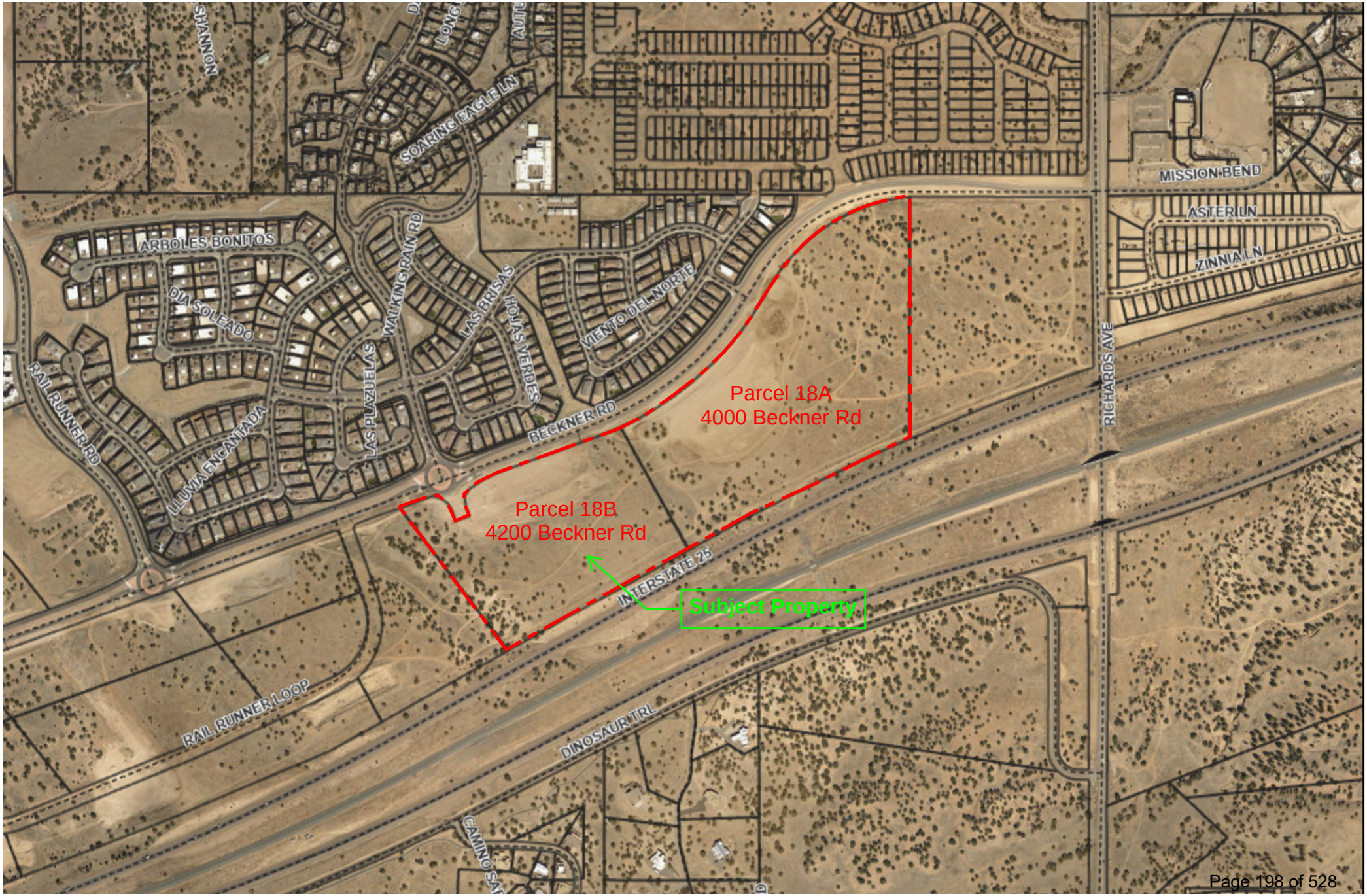
Parcel 18A
4000 Beckner Rd
Parcel 18B
4200 Beckner Rd
Subject Property
BECKNER RD
INTERSTATE 25
RICHARDS AVE
MISSION BEND
ASTER LN
ZINNIA LN
SOARING EAGLE LN
WALKING RAIN RD
LAS BRISAS
HOJAS VERDES
VIENTO DEL NORTE
ARBOLES BONITOS
DIA SOLEADO
LLUVIA ENCANTADA
LAS PLAZUELAS
RAIL RUNNER RD
RAIL RUNNER LOOP
DINOSAUR TRL
SHANNON

# Exhibit A: Subdivision Site Plan

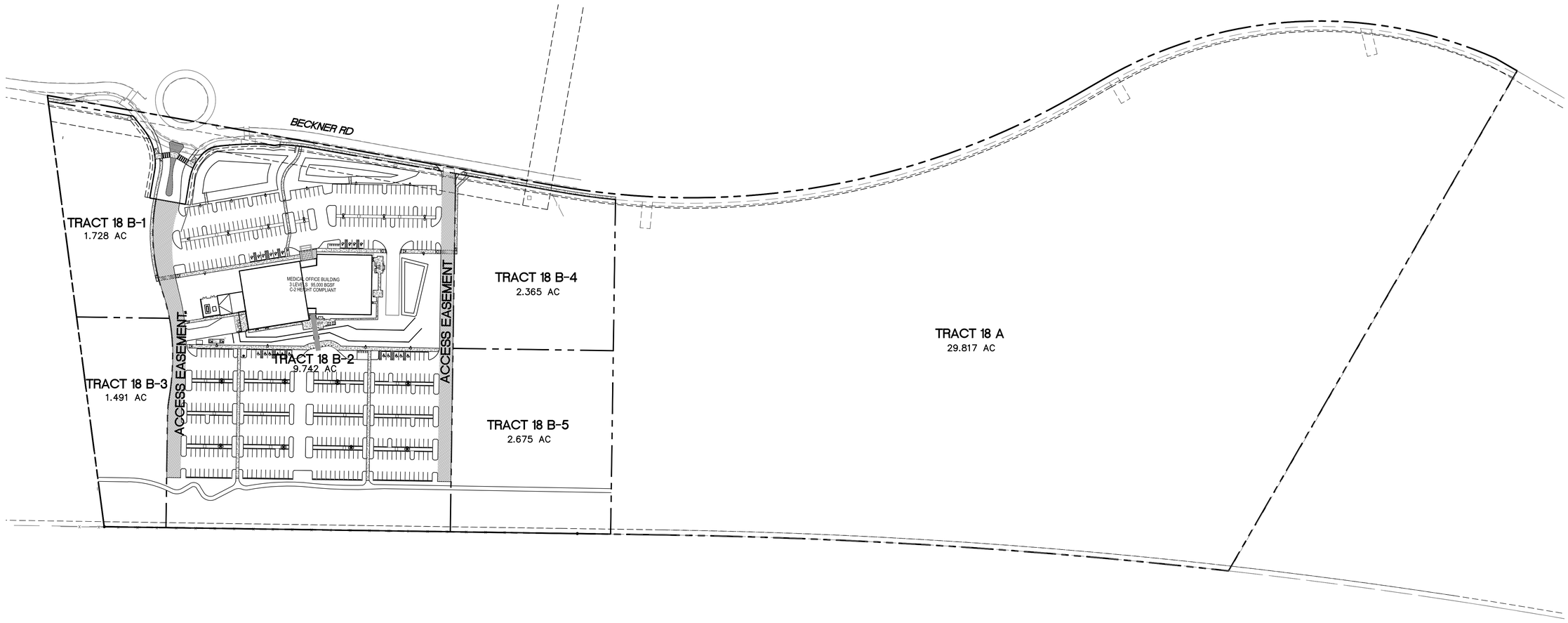


GRAPHIC SCALE

100 0 50 100

( IN FEET )
1 inch = 100 ft.

| | | |
|---|---|---|
| ENGINEER'S SEAL | LAS SOLERAS<br>TRACT 18 B REPLAT<br>BECKNER RD SANTA FE, NM<br>SKETCH PLAT | DRAWN BY<br>pm<br>DATE<br>10-17-23<br>DRAWING<br>2022040-SK<br>SHEET #<br>1 |
| RONALD R. BOHANNAN<br>P.E. #7868 | TIERRA WEST, LLC<br>5571 MIDWAY PARK PL NE<br>ALBUQUERQUE, NEW MEXICO 87109<br>(505) 858-3100<br>www.tierrawestllc.com | JOB #<br>2022040 |

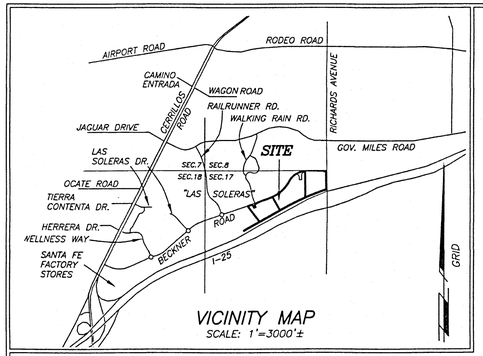


VICINITY MAP
SCALE: 1"=3000'±

## REFERENCE DOCUMENTS

1. BECKNER ROAD DEDICATION PLAT PREPARED FOR PRESBYTERIAN HEALTHCARE SERVICES, SPECTRUM ACQUISITION SANTA FE LLC, LAS SOLERAS VILLAGE, LLC; LAS SOLERAS CENTER, LLC AND BECKNER ROAD EQUITIES, INC. BY DIEGO J. SISNEROS, NMPS 13986. PLAT RECORDED AS INSTRUMENT NUMBER 1808503 ON THE 31ST DAY OF OCTOBER, 2016 AND PLAT BOOK 809 PAGES 3-4, IN THE SANTA FE COUNTY CLERKS OFFICE.

2. EASEMENT SURVEY PLAT PREPARED FOR VDLS LLC, A NEW MEXICO LIMITED LIABILITY COMPANY OF TRACT 17 AND TRACT 18 LAS SOLERAS, PREPARED BY DIEGO J. SISNEROS, NMPLS 13986, RECORDED ON THE 17TH DAY OF AUGUST AS INST.#1962900 IN BOOK 881 PAGE 08-09.

ALL OTHER REFERENCE DOCUMENTS AS NOTED HEREON.

## UTILITY COMPANIES

Mike Mortes — 11/15/2022
COMCAST — DATE

IN APPROVING THIS PLAT, PUBLIC SERVICE COMPANY OF NEW MEXICO (PNM), NEW MEXICO GAS COMPANY (NMGC) AND QWEST CORPORATION d/b/a CENTURYLINK (QWEST) DID NOT CONDUCT A TITLE SEARCH OF THE PROPERTIES SHOWN HEREON. CONSEQUENTLY, PNM, NMGC AND QWEST DO NOT WAIVE OR RELEASE ANY EASEMENT OR EASEMENT RIGHTS WHICH MAY HAVE BEEN GRANTED BY PRIOR PLAT, REPLAT, OR OTHER DOCUMENT AND WHICH ARE NOT SHOWN ON THIS PLAT.

PNM ELECTRIC SERVICE — 11/17/2022
DATE

Pamela C. Stone — 11/17/2022
NM GAS COMPANY — DATE

CENTURY LINK DISCLAIMER.

THIS PLAT HAS BEEN APPROVED FOR EASEMENT PURPOSES ONLY THE SIGNING OF THIS PLAT DOES NOT IN ANY WAY GUARANTEE TELEPHONE SERVICE TO THE SUBDIVISION.

Doug Dale — 11/15/2022
QWEST CORPORATION d/b/a CENTURY LINK(QWEST) — DATE

## SURVEYORS CERTIFICATE

I HEREBY CERTIFY THAT THIS PLAT IS A TRUE REPRESENTATION OF A SURVEY COMPLETED UNDER MY PERSONAL SUPERVISION ON THE 19TH DAY OF DECEMBER, 2020 TO THE BEST OF MY KNOWLEDGE, THE SURVEY AND PLAT ARE CORRECT, TRUE AND MEET THE, MINIMUM STANDARDS FOR LAND SURVEYS IN NEW MEXICO.

DIEGO J. SISNEROS, NMPS#13986, 11/1/2022

DIEGO J. SISNEROS — NEW MEXICO — 13986 — REGISTERED PROFESSIONAL SURVEYOR

SANTA FE COUNTY TREASURER — Dec. 2, 22
DATE

COUNTY OF SANTA FE )SS
STATE OF NEW MEXICO )
I hereby certify that this instrument 2002919 was filed for record on the 12 day of December, 2022 A.D. at 11:04 o'clock AM, and was duly recorded in book 898 page(s) 7-8 of the records of Santa Fe County.

Witness my Hand and Seal of office
KATHARINE E. CLARK
County Clerk, Santa Fe county, N.M.

COUNTY CLERK — KATHARINE E. CLARK — SANTA FE COUNTY NEW MEXICO

Deputy

## DEDICATION AND AFFIDAVIT

KNOW ALL PERSONS BY THESE PRESENTS THAT THE UNDERSIGNED OWNER(S) HAVE CAUSED TO BE DIVIDED THOSE LANDS SHOWN HEREON. THIS SAID REPLAT IS MADE WITH THE FREE CONSENT AND IN ACCORDANCE WITH THE DESIRES OF SAID OWNER(S). THIS REPLAT CONTAINS 47.819 ACRES, MORE OR LESS. THIS LOT SPLIT LIES WITHIN THE PLATTING JURISDICTION OF THE CITY OF SANTA FE, N.M.

PUBLIC UTILITY EASEMENTS SHOWN ON THIS PLAT ARE GRANTED FOR THE COMMON AND JOINT USE OF:
PUBLIC SERVICE COMPANY OF NEW MEXICO ("PNM"), A NEW MEXICO CORPORATION, (PNM ELECTRIC) FOR INSTALLATION, MAINTENANCE, AND SERVICE OF OVERHEAD AND UNDERGROUND ELECTRICAL LINES, TRANSFORMERS, AND OTHER EQUIPMENT AND RELATED FACILITIES REASONABLY NECESSARY TO PROVIDE ELECTRICAL SERVICES. EASEMENTS FOR ELECTRIC TRANSFORMERS/SWITCHGEARS, AS INSTALLED, SHALL EXTEND TEN (10) FEET IN FRONT OF TRANSFORMERS/SWITCHGEAR DOORS AND FIVE (5) FEET ON EACH SIDE.

NEW MEXICO GAS COMPANY FOR INSTALLATION, MAINTENANCE, AND SERVICE FOR NATURAL GAS LINES, VALVES AND OTHER EQUIPMENT AND FACILITIES REASONABLY NECESSARY TO PROVIDE NATURAL GAS SERVICES.

QWEST CORPORATION D/B/A CENTURY LINK QC FOR THE INSTALLATION, MAINTENANCE, AND SERVICE OF SUCH LINES, CABLE, AND OTHER RELATED EQUIPMENT AND FACILITIES REASONABLY NECESSARY TO PROVIDE COMMUNICATION SERVICES.

COMCAST FOR THE INSTALLATION, MAINTENANCE, AND SERVICE SUCH LINES, CABLE AND OTHER RELATED EQUIPMENT AND FACILITIES REASONABLY NECESSARY TO PROVIDE CABLE SERVICES.

INCLUDED IS THE RIGHT TO BUILD, REBUILD, CONSTRUCT, RECONSTRUCT, LOCATE, RELOCATE WITHIN THE EASEMENT, CHANGE, REMOVE, REPLACE, MODIFY, RENEW, OPERATE AND MAINTAIN FACILITIES FOR PURPOSES DESCRIBED ABOVE, TOGETHER WITH FREE ACCESS TO, FROM, AND OVER SAID EASEMENT, WITH THE RIGHT AND PRIVILEGE OF GOING UPON, OVER AND ACROSS ADJOINING LANDS OF GRANTOR FOR THE PURPOSES SET FORTH HEREIN AND WITH THE RIGHT TO UTILIZE THE RIGHT OF WAY AND EASEMENT TO EXTEND SERVICES TO CUSTOMERS OF GRANTEE, INCLUDING SUFFICIENT WORKING AREA SPACE FOR ELECTRICAL TRANSFORMERS, WITH THE RIGHT AND PRIVILEGE TO TRIM AND REMOVE TREES, SHRUBS OR BUSHES WHICH INTERFERE WITH THE PURPOSES SET FORTH HEREIN. NO BUILDING, SIGN POOL (ABOVEGROUND OR SUBSURFACE), HOT TUB, CONCRETE OR WOOD POOL DECKING, OR OTHER STRUCTURE SHALL BE ERECTED OR CONSTRUCTED ON SAID EASEMENTS, NOR SHALL ANY WELL BE DRILLED OR OPERATED THEREON. PROPERTY OWNERS SHALL BE SOLELY RESPONSIBLE FOR CORRECTING ANY VIOLATIONS OF NATIONAL ELECTRICAL SAFETY CODE BY CONSTRUCTION OF POOLS, DECKING, OR ANY STRUCTURES ADJACENT TO OR NEAR EASEMENTS SHOWN ON THIS PLAT.

EASEMENTS SHALL BE BINDING UPON THE UNDERSIGNED AND THEIR SUCCESSORS AND ASSIGNS

STORMWATER AGREEMENT:
PROPERTY OWNER(S) HEREBY AGREE THAT ALL STORM WATER EASEMENTS AND ANY OTHER DRAINAGE IMPROVEMENTS ON PRIVATE PROPERTY WILL BE MAINTAINED AND KEPT FULLY FUNCTIONAL AS ORIGINALLY DESIGNED AND CONSTRUCTED WITHIN PRIVATE PROPERTY BOUNDARIES BY BECKNER ROAD EQUITIES, INC. LOT OWNERS ASSOCIATION(OWNER) AND SUBSEQUENT HEIRS, ASSIGNS, AND FUTURE OWNERS. THE CITY IS HEREBY GRANTED THE FOLLOWING: (1) ACCESS FOR INSPECTION OF SAID IMPROVEMENTS; (2) IN THE EVENT OF DRAINAGE FACILITY MAINTENANCE DEFICIENCY AND AFTER TEN (10) DAYS WRITTEN NOTICE TO THE RESPECTIVE PROPERTY OWNER, TO ENTER AND RESTORE FULL FUNCTIONAL CAPACITY OF THE DRAINAGE IMPROVEMENTS; AND (3) TO LIEN THE PROPERTY FOR BOTH DIRECT AND INDIRECT COSTS ASSOCIATED WITH SUCH WORK. BY SIGNATURE AFFIXED TO THIS INSTRUMENT, THE PROPERTY OWNER(S) APPROVE AND AGREE THAT THIS AGREEMENT IS BINDING PERPETUALLY, RUNNING WITH THE LAND, ON PRESENT AND FUTURE OWNERS, HEIRS, AND ASSIGNS.

OWNERS TRACT 18:
LAS SOLERAS VILLAGE LLC, A N.M. LIMITED LIABILITY CO.,

Gordon L. Skarsgard
GORDON L. SKARSGARD, MANAGING MEMBER

STATE OF NEW MEXICO NOTARY PUBLIC DIANA SLIWICKI Commission # 1115266 My Comm. Exp. June 17, 2024

STATE OF NEW MEXICO )
)SS
COUNTY OF BERNALILLO )
THE FOREGOING INSTRUMENT WAS ACKNOWLEDGED AND SUBSCRIBED BEFORE ME BY GORDON L. SKARSGARD, MANAGING MEMBER, LAS SOLERAS VILLAGE LLC, A N.M. LIMITED LIABILITY CO., ON THIS 22nd DAY OF November, 2022

Diana Sliwicki — 6/17/2024
NOTARY PUBLIC — COMMISSION EXPIRES

June Gardner
JUNE GARDNER, MANAGING MEMBER

STATE OF NEW MEXICO NOTARY PUBLIC DIANA SLIWICKI Commission # 1115266 My Comm. Exp. June 17, 2024

STATE OF NEW MEXICO )
)SS
COUNTY OF BERNALILLO )
THE FOREGOING INSTRUMENT WAS ACKNOWLEDGED AND SUBSCRIBED BEFORE ME BY JUNE GARDNER, MANAGING MEMBER, LAS SOLERAS VILLAGE LLC, A N.M. LIMITED LIABILITY CO., ON THIS 22nd DAY OF November, 2022

Diana Sliwicki — 6/17/2024
NOTARY PUBLIC — COMMISSION EXPIRES

TRACT 18: LAS SOLERAS CENTER, LLC., A NEW MEXICO LIMITED LIABILITY COMPANY

Gordon L. Skarsgard
BY: GORDON L. SKARSGARD, OVERSIGHT MANAGER

STATE OF NEW MEXICO NOTARY PUBLIC DIANA SLIWICKI Commission # 1115266 My Comm. Exp. June 17, 2024

STATE OF NEW MEXICO )
)SS
COUNTY OF BERNALILLO )
THE FOREGOING INSTRUMENT WAS ACKNOWLEDGED AND SUBSCRIBED BEFORE ME BY GORDON L. SKARSGARD, OVERSIGHT MANAGER OF LAS SOLERAS CENTER, LLC., A NEW MEXICO LIMITED LIABILITY COMPANY, ON THIS 22nd DAY OF November, 2022

Diana Sliwicki — 6/17/2024
NOTARY PUBLIC — MY COMMISSION EXPIRES

Randall W. Eakin
BY: RANDALL W. EAKIN, OVERSIGHT MANAGER

STATE OF NEW MEXICO NOTARY PUBLIC DIANA SLIWICKI Commission # 1115266 My Comm. Exp. June 17, 2024

STATE OF NEW MEXICO )
)SS
COUNTY OF BERNALILLO )
THE FOREGOING INSTRUMENT WAS ACKNOWLEDGED AND SUBSCRIBED BEFORE ME BY RANDALL W. EAKIN, OVERSIGHT MANAGER OF LAS SOLERAS CENTER, LLC., A NEW MEXICO LIMITED LIABILITY COMPANY, ON THIS 22nd DAY OF November, 2022

Diana Sliwicki — 6/17/2024
NOTARY PUBLIC — COMMISSION EXPIRES

John M. Mahoney
JOHN M. MAHONEY, MANAGING MEMBER

STATE OF NEW MEXICO NOTARY PUBLIC DIANA SLIWICKI Commission # 1115266 My Comm. Exp. June 17, 2024

STATE OF NEW MEXICO )
)SS
COUNTY OF BERNALILLO )
THE FOREGOING INSTRUMENT WAS ACKNOWLEDGED AND SUBSCRIBED BEFORE ME BY JOHN M. MAHONEY, MANAGING MEMBER, LAS SOLERAS VILLAGE LLC, A N.M. LIMITED LIABILITY CO., ON THIS 22nd DAY OF November, 2022

Diana Sliwicki — 6/17/2024
NOTARY PUBLIC — COMMISSION EXPIRES

J. Harmon Burttram
J. HARMON BURTTRAM, OVERSIGHT MANAGER

STATE OF NEW MEXICO )
)SS
COUNTY OF SANTA FE )
THE FOREGOING INSTRUMENT WAS ACKNOWLEDGED AND SUBSCRIBED BEFORE ME BY J. HARMON BURTTRAM, OVERSIGHT MANAGER, LAS SOLERAS VILLAGE LLC, A N.M. LIMITED LIABILITY CO., ON THIS 23 DAY OF November, 2022

Victoria M. Dalton — 5/23/2023
NOTARY PUBLIC — COMMISSION EXPIRES

STATE OF NEW MEXICO NOTARY PUBLIC VICTORIA M. DALTON COMMISSION NUMBER 1061856 EXPIRATION DATE 5-23-2023

J. Harmon Burttram
BY: J. HARMON BURTTRAM, OVERSIGHT MANAGER

STATE OF NEW MEXICO NOTARY PUBLIC VICTORIA M. DALTON COMMISSION NUMBER 1061856 EXPIRATION DATE 05-23-2023

STATE OF NEW MEXICO )
)SS
COUNTY OF SANTA FE )
THE FOREGOING INSTRUMENT WAS ACKNOWLEDGED AND SUBSCRIBED BEFORE ME BY J. HARMON BURTTRAM, OVERSIGHT MANAGER OF LAS SOLERAS CENTER, LLC., A NEW MEXICO LIMITED LIABILITY COMPANY, ON THIS 23 DAY OF November, 2022

Victoria M. Dalton — 5/23/2023
NOTARY PUBLIC — COMMISSION EXPIRES

June Gardner
BY: JUNE GARDNER, OVERSIGHT MANAGER

STATE OF NEW MEXICO NOTARY PUBLIC DIANA SLIWICKI Commission # 1115266 My Comm. Exp. June 17, 2024

STATE OF NEW MEXICO )
)SS
COUNTY OF BERNALILLO )
THE FOREGOING INSTRUMENT WAS ACKNOWLEDGED AND SUBSCRIBED BEFORE ME BY JUNE GARDNER, OVERSIGHT MANAGER OF LAS SOLERAS CENTER, LLC., A NEW MEXICO LIMITED LIABILITY COMPANY, ON THIS 22nd DAY OF November, 2022

Diana Sliwicki — 6/17/2024
NOTARY PUBLIC — COMMISSION EXPIRES

# LOT SPLIT SURVEY PLAT
PREPARED FOR
## LAS SOLERAS VILLAGE LLC
&
## LAS SOLERAS CENTER LLC
OF
TRACT 18 LAS SOLERAS
RECORDED AS PLAT BOOK 809 PAGES 3-4
LYING WITHIN SECTION 17, T.16N., R.9E., N.M.P.M.
CITY AND COUNTY OF SANTA FE, N.M.

2080007

PURPOSE: THE PURPOSE OF THIS PLAT IS TO CREATE TWO LOTS.

## CITY OF SANTA FE APPROVAL CASE#2019-1145

DBZ DAE BETNGESSLER — 12/9/22
CITY ENGINEER FOR LAND USE — DATE

12.7.2022
CITY PLANNER — DATE

## CITY OF SANTA FE NOTES AND CONDITIONS

1. PROPERTY DEVELOPMENT IS REQUIRED TO COMPLY WITH APPLICABLE PROVISIONS OF CHAPTER 14. LAND DEVELOPMENT CODE, SFCC 2001 AND SUBSEQUENT AMENDMENTS.
2. PROPERTY DEVELOPMENT IS REQUIRED TO COMPLY WITH THE PROVISIONS OF EACH CITY OF SANTA FE ORDINANCE ADOPTED PRIOR TO PLAT AND OR DEVELOPMENT PLAN RECORDING WITH THE COUNTY CLERK OR SUBMITTAL FOR A BUILDING PERMIT APPLICATION THAT MODIFIES ANY PROVISION OF CHAPTER 14, LAND DEVELOPMENT CODE, SFCC 1987 AND SUBSEQUENT AMENDMENTS.
3. BUILDABLE AREAS FOR PLATTED PARCELS WILL BE DETERMINED AT THE TIME OF BUILDING PERMIT APPLICATION AS DETAILED IN THE LAND DEVELOPMENT CODE.
4. DEVELOPMENT OF TRACT 18 SHALL BE IN COMPLIANCE WITH ALL CONDITIONS OF APPROVAL FOR LAS SOLERAS CASE M-2008-27, M-2008-28, SD 2008-15, AND ZA-2008-11, AS WELL AS WITH THE ANNEXATION AGREEMENT RECORDED ON 3/04/2010.
5. PRIOR TO NEW CONSTRUCTION, PLAT WILL BE SUBMITTED TO FIRE DEPARTMENT FOR COMPLIANCE WITH THE INTERNATIONAL FIRE CODE. ACCESS GREATER THAN 150 FEET LONG MUST PROVIDE AN EASEMENT OF 20 FEET WIDE AND PROVIDE A FIRE TURNAROUND. (MUST COMPLY WITH APPENDIX D OF IFC 2006 EDITION).
6. ALL FIRE DEPARTMENT ACCESS SHALL BE NO GREATER THAN A 10% GRADE THROUGHOUT AND MAINTAIN 20' MINIMUM WIDTH.
7. FIRE DEPARTMENT ACCESS SHALL NOT BE LESS THAN 20 FEET WIDTH TO ANY NEW CONSTRUCTION.
8. FIRE DEPARTMENT SHALL HAVE 150 FEET DISTANCE TO ANY PORTION OF THE BUILDING ON ANY NEW CONSTRUCTION.
9. SHALL HAVE WATER SUPPLY THAT MEETS FIRE FLOW REQUIREMENTS AS PER IFC OR INSTALL AN AUTOMATIC SPRINKLER SYSTEM.
10. EACH LOT SHALL BE SERVED WITH SEPARATE SEWER AND WATER SERVICES.
11. THE PROPERTY AND STRUCTURES SHALL BE CONNECTED TO THE CITY'S PUBLIC SEWER COLLECTION SYSTEM.
12. 100 FOOT PRIVATE OPEN SPACE EASEMENT WITH FLOATING 20' NON MOTORIZED TRAIL EASEMENT TO BE GRANTED TO THE CITY OF SANTA FE. SAID TRAIL TO BE CONSTRUCTED WITH DEVELOPMENT OF LOTS.
13. ANY AND ALL DEVELOPMENT SHALL MEET THE IFC CODE REQUIREMENTS 2009 EDITION OR THE MOST CURRENT EDITION THE GOVERNING BODY HAS ADOPTED AT THE TIME OF PERMITTING.
14. THIS DEVELOPMENT SHALL COMPLY WITH THE FOLLOWING IFC 2009 EDITIONS FOR ACCESS.
. CHAPTER 5
. APPENDIX D

## FLOOD ZONE

THIS PROPERTY LIES WITHIN OTHER AREAS "ZONE X", AREAS DETERMINED TO BE OUTSIDE THE 0.2% ANNUAL CHANCE FLOODPLAIN AS SHOWN ON FIRM MAP No. 35049C0507E, EFFECTIVE DECEMBER 4, 2012.

"TITLE AND INDEXING INFORMATION FOR COUNTY CLERK"

CURRENT OWNER: LAS SOLERAS VILLAGE LLC, A N.M. LIMITED LIABILITY CO., AND LAS SOLERAS CENTER, LLC., A NEW MEXICO LIMITED LIABILITY COMPANY

TRACT 18 UPC: 1-050-094-338-410

LEGAL DESCRIPTION: TRACT 18 BECKNER ROAD DEDICATION PLAT, RECORDED AS BOOK 809 PAGES 3-4

PLSS LOCATION: LYING WITHIN SECTION 17, T16N, R9E, NMPM

CITY: SANTA FE

COUNTY: SANTA FE

STATE: NEW MEXICO



DAWSON SURVEYS INC.
PROFESSIONAL LAND SURVEYORS
7505 MALLARD WAY, SUITE A
S.F., N.M., 87507 PH505-471-6660
FILE#10419LS DATE: 11/1/2022

8980008

## LEGEND:

- ● DENOTES #4 REBAR NMPLS 13986, OR AS SHOWN, FOUND.
- ○ DENOTES #4 REBAR WITH CAP #13986 TO BE SET UPON RECORDING.
- • DENOTES CALCULATED POINT, NOT SET.
- ▣ DENOTES UTILITY BOX, PULL BOX OR METER.
- ⌀ DENOTES UTILITY POLE.
- Ⓢ DENOTES STORM SEWER MANHOLE.
- —OH— DENOTES OVERHEAD UTILITY LINE.
- ..... DENOTES EASEMENT VACATED BY THIS PLAT.
- —x— DENOTES FENCELINES.
- ——— DENOTES BOUNDARY OF LANDS DEALT WITH BY THIS PLAT. INFORMATION OUTSIDE OF THIS BOUNDARY IS BACKGROUND INFORMATION ONLY, NOT VERIFIED FOR ACCURACY AND IS NOT PART OF THIS PLAT. DATA IN PARENTHESIS IS FROM PREVIOUS PLATS OR DOCUMENTS.

## CONTROL SUMMARY:

BEARINGS ARE GRID. DISTANCES ARE REFERRED TO 6800' AMSL. TO CONVERT TO NMSPC CENTRAL ZONE GRID DISTANCES, MULTIPLY BY THE COMBINED SCALE FACTOR OF 0.999583883. VERTICAL DATUM IS NAVD88. ALL DATA IS DERIVED FROM CONTROL ESTABLISHED USING THE NMSP NAD83 PROJECTION FROM THE CARLSON SURVCE2 DATA COLLECTION PROGRAM USING RTK BASE STATION "DAWSON2", ESTABLISHED FROM '92 NGS AND SANTA FE COUNTY G.I.S. CONTROL STATIONS: GRID N1687626.87027, GRID E 1708833.475 AND AN ELEVATION OF 6572.376 VIA STATIC OBSERVATION. A BEARING OF S60°50'03"W WAS ESTABLISHED ON THE SOUTH BOUNDARY BETWEEN NMSHD R/W RAIL

| LINE | BEARING | DIST. |
|---|---|---|
| L1 | N68°11'50"W | 34.42' |
| L2 | N19°55'24"W | 53.23' |
| L3 | S70°04'36"W | 72.00' |
| L4 | S20°32'01"E | 49.22' |
| L5 | S08°51'27"W | 16.53' |
| L6 | S70°18'02"W | 17.92' |
| L7 | S52°31'39"W | 13.10' |

| CURVE | RADIUS | ARC | CHORD | BEARING | DELTA |
|---|---|---|---|---|---|
| C1 | 1549.00' | 961.23' | 945.88' | N47°49'25"E | 35°33'17" |
| C2 | 851.00' | 849.49' | 814.65' | N58°38'36"E | 57°11'38" |
| C3 | 105.00' | 88.47' | 85.87' | N44°03'37"W | 48°16'26" |
| C4 | 65.00' | 40.73' | 40.07' | S09°05'44"E | 35°54'20" |
| C5 | 45.00' | 34.57' | 33.73' | S30°52'05"W | 44°01'17" |
| C6 | 663.00' | 95.45' | 95.36' | S57°00'10"W | 8°14'54" |
| C7 | 476.02' | 66.75' | 66.69' | S66°03'35"W | 8°02'02" |
| C8 | 1548.99' | 121.00' | 120.97' | S67°50'20"W | 4°28'32" |

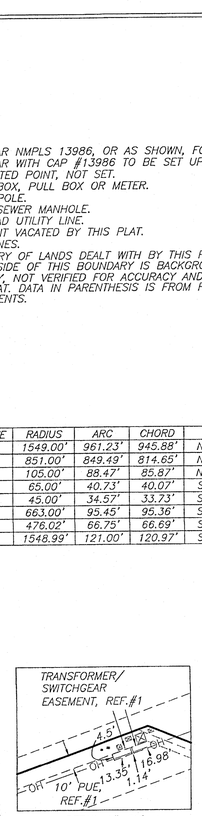

DETAIL 1"=50'

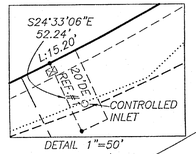

DETAIL 1"=50'

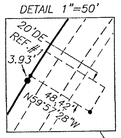

DETAIL 1"=50'

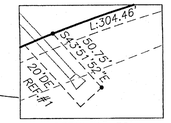

DETAIL 1"=50'

TIE S88°38'14"W 18.30'

TIE N89°48'35"W 364.91'

TIE N00°00'00"W 7.07'

#4 REBAR 13986

#5 REBAR 9750

#4 REBAR 13986

RIGHT OF WAY REFER TO PLAT 823/37-39

BECKNER ROAD
100' DEDICATED R/W PLAT 804/9-10

98' R/W

N66°59'19"E 189.25'

38'SLE, PLAT 809/3-4

L:186.89'

8.73'

20'DE, REF.#1

C2

10' PUE RESERVATION REF.#2

PUBLIC ACCESS EASEMENT PLAT REF.#2

SLE, PLAT 809/3-4

N42°09'02"E 152.29'

N59°00'26"E 114.95'

N45°44'05"E 80.37'

N31°41'47"E 8.66'

N31°44'20"E 146.71'

20'DE, REF.#1

LA PUERTA
50' R/W PLAT 823/37-39

BECKNER ROAD
98' DEDICATED R/W PLAT 809/3-4

N37°02'47"E 62.89'

S59°18'09"E 33.32'

S00°00'00"E 1142.31'

ESTANCIAS DE LAS SOLERAS UNIT 2A
PLAT 823/37-39

TRACT 17
LAS SOLERAS
PLAT 714/14-26

10' PUE, PLAT 809/3-4

RELOCATED SLOPE EASEMENT

TEMPORARY DRAINAGE EASEMENT SUBJECT TO RELOCATION AT TIME OF DEVELOPMENT

Δ:37°45'57"
R:1414.26
A:932.19
CH:S48°05'09"W
915.40

C1

15' DE, REF. #2 CONFIGURATION SUBJECT TO FINAL DESIGN

TRACT 18A
29.817 Ac.±
26.791 Ac.± w/o OPEN SPACE
#4000 BECKNER ROAD

SLOPE EASEMENT HEREBY VACATED PURSUANT TO PLAT 809/3-4, "SLOPE EASEMENTS MAY BE MODIFIED OR VACATED UPON FINAL GRADING OF TRACTS".

SLOPE EASEMENT HEREBY RELOCATED TO TEMPORARY GRADING LOCATION. PURSUANT TO PLAT 809/3-4, "SLOPE EASEMENTS MAY BE MODIFIED OR VACATED UPON FINAL GRADING OF TRACTS".

50' PNM TRANSMISSION EASEMENT, PLAT 794/1-13

20' DE, PLAT 809/3-4

L:174.56'

C8

40.41'

22.24'

9.56'

N70°32'24"E 197.22'

S19°55'24"E 27.17'

490.00'
N70°04'36"E

50' PNM TRANSMISSION EASEMENT, INST.#1802604 & INST.# 1802605

L=9.83'

℄ T-RAIL 680+00

#4 REBAR L.S. 7014

ESTANCIAS DE LAS SOLERAS UNIT 1A & 1B
PLAT 814/39-43

WALKING RAIN RD.
56' R/W PLAT 805/34

50' PNM TRANSMISSION EASEMENT, INST.#1802604 & INST.# 1802605

10' PUE, REF.#1

172.21' S70°04'36"W

L1

C3

C5

C6

L6

L7

C7

10' PUE, PLAT 809/3-4

C4

L5

L4

L2

L3

5' TRAIL EASEMENT PLAT 809/3-4

(22.77')
18.55'

10' PUE, PLAT 809/3-4

SLE, PLAT 809/3-4

N50°20'16"E 96.96'

S71°54'43"E 68.11'

N70°04'36"E 25.78'

38'SLE PLAT 809/3-4

TRACT 18B
18.001 Ac.±
15.797 Ac.± w/o OPEN SPACE
#4200 BECKNER ROAD

N23°09'21"W 666.03'

100' OPEN SPACE EASEMENT, REFER TO NOTE 12.

103.63' BACK. T-RAIL 688+28.92

S60°50'03"W

Δ:5°35'01"
R:11609.16'
L:1131.31'
CH:1130.87'
S63°37'45"W

SOUTHBOUND LANES

INTERSTATE 25
RIGHT OF WAY MAP
NEW MEXICO PROJECT NO.
I-025-5(36)272
JUNE 18, 1971

10' UNDERGROUND UTILITY EASEMENT PLAT 714/14-26

N37°29'40"W 854.56'

1008.79'

215.25'

BACK. T-RAIL

TRACT 19
LAS SOLERAS
PLAT 809/3-4

GRID

SCALE 1" = 100' FEET
100 0 100

Diego J. Sisneros, NMPS#13986 11/1/2022

DIEGO J. SISNEROS NEW MEXICO 13986 REGISTERED PROFESSIONAL SURVEYOR

SHEET 2 OF 2

DAWSON SURVEYS INC.
PROFESSIONAL LAND SURVEYORS
7505 MALLARD WAY, SUITE A
S.F., N.M., 87507 PH505-471-6660
FILE#10419LS DATE: 11/1/2022

# 300 foot buffer 4200 Beckner(99312021)

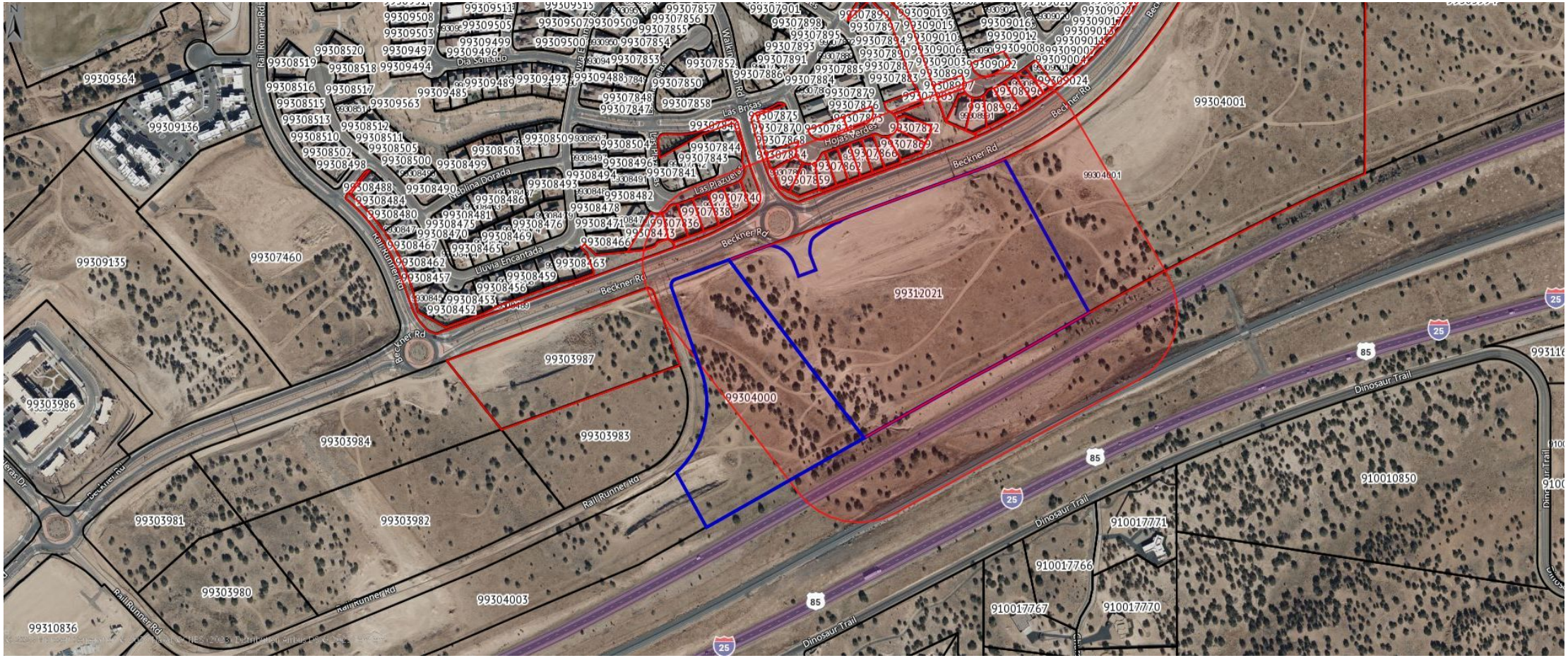

# Parcels within 300ft. of 4200 Beckner - Lot 18B

| Parcel Number | UPC | Property Address | Legal Description | Owner Name | Mailing Address | City | State | Zip |
|---|---|---|---|---|---|---|---|---|
| 99304000 | 1.05009E+18 | 5001 RAIL RUNNER RD | S17 T16N R9E LAS SOLERAS 19 | LAS SOLERAS CENTER LLC | 8220 SAN PEDRO NE STE 500 | ALBUQUERQUE | NM | 87113-2476 |
| 99307860 | 1.05009E+18 | 4735 HOJAS VERDES | S18 T16N R9E ESTANCIAS DE LAS SOLERAS UNIT 1A 43 | LOVE, JEFFREY & PATRICIA YVONNE ROSAS | 4735 HOJAS VERDES | SANTA FE | NM | 87507 |
| 99307863 | 1.05009E+18 | 4727 HOJAS VERDES | S18 T16N R9E ESTANCIAS DE LAS SOLERAS UNIT 1A 39 | MARTINEZ, JESSE L | 4727 HOJAS VERDES | SANTA FE | NM | 87507-0853 |
| 99307838 | 1.05009E+18 | 4716 LAS PLAZUELAS | LOT 18, UNIT 1-B, ESTANCIAS DE LAS SOLERAS S/D, S18 T16N R9E | TORRES, FELISHA JOSEPHINE | NM 434 HOUSE 1463 | GUADALUPITA | NM | 87722 |
| 99307840 | 1.05009E+18 | 4720 LAS PLAZUELAS | S18 T16N R9E ESTANCIAS DE LAS SOLERAS UNIT 1B 16 | MARTIN, BILLY L & PATRICIA M | 4720 LAS PLAZUELAS | SANTA FE | NM | 87507-0848 |
| 99307837 | 1.05009E+18 | 4714 LAS PLAZUELAS | S18 T16N R9E ESTANCIAS DE LAS SOLERAS UNIT 1B 19 | BODE, RAJESH & GAYATRI ATLURI | 4714 LAS PLAZUELAS | SANTA FE | NM | 87507-0848 |
| 99309000 | 1.05009E+18 | 4736 VIENTO DEL NORTE | S18 T16N R9E ESTANCIAS DE LAS SOLERAS UNIT 2A 18 | ARCHIBEQUE, JOLENE N & JUSTIN P SCHACHTNER | 4736 VIENTO DEL NORTE | SANTA FE | NM | 87507-0866 |
| 99307846 | 1.05009E+18 | 4722 LAS PLAZUELAS | S18 T16N R9E ESTANCIAS DE LAS SOLERAS UNIT 1B PARCEL A2 | PULTE HOMES OF NEW MEXICO, INC | 7601 JEFFERSON ST NE STE 320 | ALBUQUERQUE | NM | 87109 |
| 99303987 | 1.05009E+18 | 4354 BECKNER RD | S17 T16N R9E LAS SOLERAS 24 | EAKIN, D W & H H TRICKEY | 8220 SAN PEDRO DR NE #500 | ALBUQUERQUE | NM | 87113 |
| 99308473 | 1.05009E+18 | 4710 LAS PLAZUELAS | S18 T16N R9E ESTANCIAS DE LAS SOLERAS UNIT 1C 30 | LILLIEMAE G ORTIZ REVOCABLE TRUST | 4710 LAS PLAZUELAS | SANTA FE | NM | 87507-0848 |
| 99307878 | 1.05009E+18 | 4715 HOJAS VERDES | S18 T16N R9E ESTANCIAS DE LAS SOLERAS UNIT 1A 33 | HEINRICH, ERIC J | 4715 HOJAS VERDES | SANTA FE | NM | 87507-0853 |
| 99307873 | 1.05009E+18 | 4716 HOJAS VERDES | S18 T16N R9E ESTANCIAS DE LAS SOLERAS UNIT 1A 53 | DARWIN, DWAYNE ROBERT & NAOMI RUTH | 4716 HOJAS VERDES | SANTA FE | NM | 87507 |
| 99308998 | 1.05009E+18 | 4734 VIENTO DEL NORTE | S18 T16N R9E LOT 17 ESTANCIAS DE LAS SOLERAS UNIT 2A | MONTOYA, MARK A & ANGELA C ROGUE-DELGADILLO | 4734 VIENTO DEL NORTE | SANTA FE | NM | 87507-0866 |
| 99308991 | 1.05009E+18 | 4726 VIENTO DEL NORTE | S18 T16N R9E ESTANCIAS DE LAS SOLERAS UNIT 2A 13 | THOMAS, GRANT HIRAM | 4726 VIENTO DEL NORTE | SANTA FE | NM | 87507-0862 |
| 99307861 | 1.05009E+18 | 4731 HOJAS VERDES | S18 T16N R9E ESTANCIAS DE LAS SOLERAS UNIT 1A 41 | BROOKS, DANIEL JOSEPH & DESIREE N | 4731 HOJAS VERDES | SANTA FE | NM | 87507-0853 |
| 99304001 | 1.05009E+18 | 4000 BECKNER RD | S17 T16N R9E LAS SOLERAS 18 | EAKIN, D W & H H TRICKEY | 8220 SAN PEDRO DR NE #500 | ALBUQUERQUE | NM | 87113 |
| 99307872 | 1.05009E+18 | 4717 HOJAS VERDES | S18 T16N R9E ESTANCIAS DE LAS SOLERAS UNIT 1A 34 | GRIEGO, BERYL A & MAX J | 4717 HOJAS VERDES | SANTA FE | NM | 87507 |
| 99309024 | 1.05009E+18 | UNASSIGNED | S18 T16N R9E ESTANCIAS DE LAS SOLERAS UNIT 2A PARCEL F1 | PULTE HOMES OF NEW MEXICO INC | 7601 JEFFERSON ST NE STE 320 | ALBUQUERQUE | NM | 87109-4496 |
| 99308992 | 1.05009E+18 | 4724 VIENTO DEL NORTE | S18 T16N R9E ESTANCIAS DE LAS SOLERAS UNIT 2A 12 | ALABWEH, HUSAM F | 4724 VIENTO DEL NORTE | SANTA FE | NM | 87507-0866 |
| 99307859 | 1.05009E+18 | 4733 HOJAS VERDES | S18 T16N R9E ESTANCIAS DE LAS SOLERAS UNIT 1A 42 | JARAMILLO, ANGELA M & SANTIAGO J | PO BOX 1408 | LOS ALAMOS | NM | 87544-1408 |
| 99308994 | 1.05009E+18 | 4728 VIENTO DEL NORTE | S18 T16N R9E ESTANCIAS DE LAS SOLERAS UNIT 2A 14 | NOLL, JOSEPH & JAMIE | 4728 VIENTO DEL NORTE | SANTA FE | NM | 87507-0866 |
| 99308993 | 1.05009E+18 | 4624 VIENTO DEL NORTE | S18 T16N R9E ESTANCIAS DE LAS SOLERAS UNIT 2A PARCEL G1 | PULTE HOMES OF NEW MEXICO INC | 7601 JEFFERSON ST NE STE 320 | ALBUQUERQUE | NM | 87109-4496 |
| 99307869 | 1.05009E+18 | 4719 HOJAS VERDES | S18 T16N R9E ESTANCIAS DE LAS SOLERAS UNIT 1A 35 | RASHID, AIMAN & WAFFAH | 4719 HOJAS VERDES | SANTA FE | NM | 87507-0853 |
| 99308995 | 1.05009E+18 | 4730 VIENTO DEL NORTE | S18 T16N R9E ESTANCIAS DE LAS SOLERAS UNIT 2A 15 | SINGLEDECKER, STEVEN J & AMALIA | 4730 VIENTO DEL NORTE | SANTA FE | NM | 87507 |
| 99307871 | 1.05009E+18 | 4718 HOJAS VERDES | S18 T16N R9E ESTANCIAS DE LAS SOLERAS UNIT 1A 54 | GARCIA, JESSICA S & JAMES E | 4718 HOJAS VERDES | SANTA FE | NM | 87507 |
| 99307867 | 1.05009E+18 | 4721 HOJAS VERDES | S18 T16N R9E LOT 36 ESTANCIAS DE LAS SOLERAS UNIT 1A | GARCIA, MAURICIO & CAREN G | 4721 HOJAS VERDES | SANTA FE | NM | 87507-0853 |
| 99307864 | 1.05009E+18 | 4737 HOJAS VERDES | S18 T16N R9E ESTANCIAS DE LAS SOLERAS UNIT 1A 44 | LONGLEY, THOMAS W & GUADALUPE | 4737 HOJAS VERDES | SANTA FE | NM | 87507-0853 |
| 99307866 | 1.05009E+18 | 4723 HOJAS VERDES | S18 T16N R9E ESTANCIAS DE LAS SOLERAS UNIT 1A 37 | FRESQUEZ, MARGARET | 4723 HOJAS VERDES | SANTA FE | NM | 87507 |
| 99308489 | 1.05009E+18 | UNASSIGNED | S18 T16N R9E ESTANCIAS DE LAS SOLERAS UNIT 1C PARCEL B1 | PULTE HOMES OF NEW MEXICO, INC | 7601 JEFFERSON ST NE STE 320 | ALBUQUERQUE | NM | 87109 |
| 99307865 | 1.05009E+18 | 4725 HOJAS VERDES | S18 T16N R9E ESTANCIAS DE LAS SOLERAS UNIT 1A 38 | MONTOYA, NAOMI J | PO BOX 15734 | SANTA FE | NM | 87592-5734 |
| 99307903 | 1.05009E+18 | 4701 A LAS BRISAS | S18 T16N R9E ESTANCIAS DE LAS SOLERAS UNIT 1A PARCEL B1 | PULTE HOMES OF NEW MEXICO, INC | 7601 JEFFERSON ST NE STE 320 | ALBUQUERQUE | NM | 87109 |
| 99309002 | 1.05009E+18 | 4719 VIENTO DEL NORTE | S18 T16N R9E ESTANCIAS DE LAS SOLERAS UNIT 2A 60 | SMARZEWSKI, JOHN S & JODI KAY DAVIS | 4719 VIENTO DEL NORTE | SANTA FE | NM | 87507 |
| 99308996 | 1.05009E+18 | 4732 VIENTO DEL NORTE | S18 T16N R9E ESTANCIAS DE LAS SOLERAS UNIT 2A 16 | JO, YONG I & MYONG | 4732 VIENTO DEL NORTE | SANTA FE | NM | 87507-0866 |
| 99307862 | 1.05009E+18 | 4729 HOJAS VERDES | S18 T16N R9E ESTANCIAS DE LAS SOLERAS UNIT 1A 40 | DE LA TORRE RAMOS, ALMA CAROLINA | 4729 HOJAS VERDES | SANTA FE | NM | 87507 |
| 99308997 | 1.05009E+18 | 4722 VIENTO DEL NORTE | S18 T16N R9E LOT 11 ESTANCIAS DE LAS SOLERAS UNIT 2A | REILLY, TERRENCE J & KIMBERLY | 4722 VIENTO DEL NORTE | SANTA FE | NM | 87507-0866 |
| 99307836 | 1.05009E+18 | 4712 LAS PLAZUELAS | S18 T16N R9E ESTANCIAS DE LAS SOLERAS UNIT 1B 20 | ROMERO, MARIO R | 4712 LAS PLAZUELAS | SANTA FE | NM | 87507 |
| 99307839 | 1.05009E+18 | 4718 LAS PLAZUELAS | LOT 17, 0.1898 AC, ESTANCIAS DE LAS SOLERAS UNIT 1-B S/D, S18 T16N R9E | ALRAMINI, HUSSEIN & RUBA TANASH | 4718 LAS PLAZUELAS | SANTA FE | NM | 87507-0848 |

# 300 FT Buffer 4000 Beckner Rd 99304001

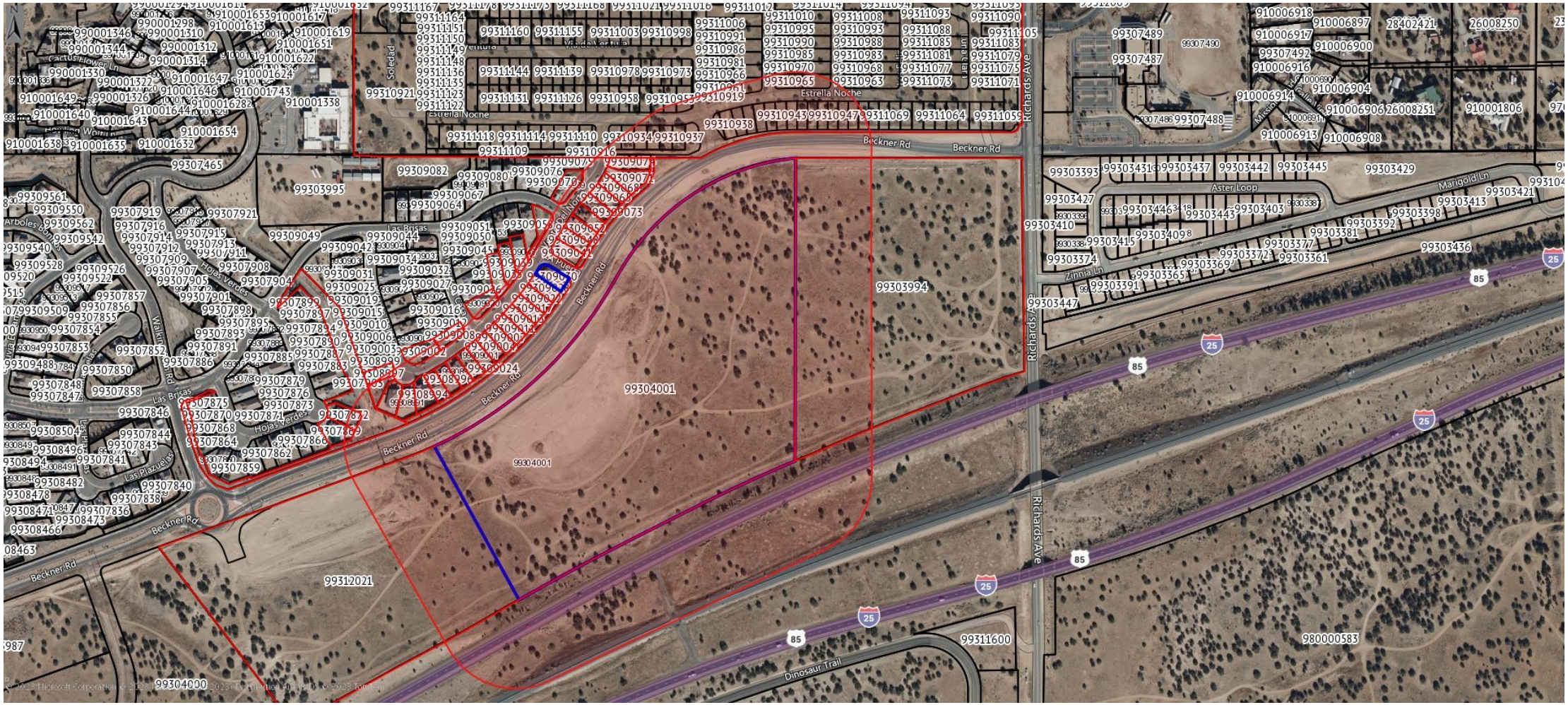

| Parcel Number | UPC | Property Address | Legal Description | Owner Name | Mailing Address | City | State | Zip |
|---|---|---|---|---|---|---|---|---|
| 99309030 | 1.05009E+18 | 4754 VIENTO DEL NORTE | LOT 27, UNIT 2A, 0.1588 AC, ESTANCIAS DE LAS SOLERAS S/D, S18 T16N R9E | DUFFEK FAMILY REVOCABLE TRUST | 42313 N LONG COVE WAY | ANTHEM | AZ | 85086-1250 |
| 99309007 | 1.05009E+18 | 4742 VIENTO DEL NORTE | S18 T16N R9E UNIT 2A LOT 21 ESTANCIAS DE LAS SOLERAS | QUINTANA, EUTIMIO A & DIANE M | 4742 VIENTO DEL NORTE | SANTA FE | NM | 87507-0866 |
| 99309052 | 1.05009E+18 | 4760 VIENTO DEL NORTE | LOT 30, ESTANCIAS DE LAS SOLERAS, UNIT 2A, S18 T16N R9E | KALOGERINI, DANIEL & ERIN LARSEN | 4760 VIENTO DEL NORTE | SANTA FE | NM | 87507-0866 |
| 910008932 | 1.0501E+18 | 3800 GOVERNOR MILES RD | LOT 3A T16N R 9E S 8 94.07 AC | BUILDING SERVICES OF SANTA FE | PO BOX 4496 | SANTA FE | NM | 87502 |
| 99309000 | 1.05009E+18 | 4736 VIENTO DEL NORTE | S18 T16N R9E ESTANCIAS DE LAS SOLERAS UNIT 2A 18 | ARCHIBEQUE, JOLENE N & JUSTIN P SCHACHTNER | 4736 VIENTO DEL NORTE | SANTA FE | NM | 87507-0866 |
| 99309013 | 1.05009E+18 | 4746 VIENTO DEL NORTE | LOT 23, UNIT 2A, 0.146 AC, ESTANCIAS DE LAS SOLERAS, S18 T16N R9E | BALDWIN, FRANK LYNN | 4746 VIENTO DEL NORTE | SANTA FE | NM | 87507-0866 |
| 99309017 | 1.05009E+18 | 4748 VIENTO DEL NORTE | LOT 24, UNIT 2A, ESTANCIAS DE LAS SOLERAS. S18 T16N R9E | ORTEGA, IVETTE | 4748 VIENTO DEL NORTE | SANTA FE | NM | 87507-0866 |
| 99309028 | 1.05009E+18 | 4752 VIENTO DEL NORTE | LOT 26 S18 T16N R9E ESTANCIAS DE LAS SOLERAS UNIT 2A | MARTINEZ, JOHANNA M | 4752 VIENTO DEL NORTE | SANTA FE | NM | 87507-0866 |
| 99309011 | 1.05009E+18 | 4744 VIENTO DEL NORTE | S18 T16N R9E ESTANCIAS DE LAS SOLERAS UNIT 2A 22 | MATA, ROSALIE A | 4744 VIENTO DEL NORTE | SANTA FE | NM | 87507-0866 |
| 99309074 | 1.05009E+18 | 4772 VIENTO DEL NORTE | LOT 36, UNIT 2A, 0.1812 AC, ESTANCIAS DE LAS SOLERAS S/D, S18 T16N R9E | ROYBAL, DARLENE MELISSA & DAVID LAWRENCE | 4772 VIENTO DEL NORTE | SANTA FE | NM | 87507-0866 |
| 99308998 | 1.05009E+18 | 4734 VIENTO DEL NORTE | S18 T16N R9E LOT 17 ESTANCIAS DE LAS SOLERAS UNIT 2A | MONTOYA, MARK A & ANGELA C ROGUE-DELGADILLO | 4734 VIENTO DEL NORTE | SANTA FE | NM | 87507-0866 |
| 99309039 | 1.05009E+18 | 4751 VIENTO DEL NORTE | S18 T16N R9E LOT 76 ESTANCIAS DE LAS SOLERAS UNIT 2A | BASSETT, FRANCES & JOHN A HANSEN | 4751 VIENTO DEL NORTE | SANTA FE | NM | 87507-0867 |
| 99309071 | 1.05009E+18 | 4770 VIENTO DEL NORTE | S18 T16N R9E LOT 35 ESTANCIAS DE LAS SOLERAS UNIT 2A | RASHID, NOOR | 4770 VIENTO DEL NORTE | SANTA FE | NM | 87507-0866 |
| 99308991 | 1.05009E+18 | 4726 VIENTO DEL NORTE | S18 T16N R9E ESTANCIAS DE LAS SOLERAS UNIT 2A 13 | THOMAS, GRANT HIRAM | 4726 VIENTO DEL NORTE | SANTA FE | NM | 87507-0862 |
| 99304001 | 1.05009E+18 | 4000 BECKNER RD | S17 T16N R9E LAS SOLERAS 18 | EAKIN, D W & H H TRICKEY | 8220 SAN PEDRO DR NE #500 | ALBUQUERQUE | NM | 87113 |
| 99309056 | 1.05009E+18 | 4762 VIENTO DEL NORTE | LOT 31, UNIT 2A, ESTANCIAS DE LAS SOLERAS, S18 T16N R9E | WEBBER, KIRK W | 4762 VIENTO DEL NORTE | SANTA FE | NM | 87507-0866 |
| 99309041 | 1.05009E+18 | 4756 VIENTO DEL NORTE | S18 T16N R9E ESTANCIAS DE LAS SOLERAS UNIT 2A 28 | REIFEL, LOYD J & CONSTANCE E | 4756 VIENTO DEL NORTE | SANTA FE | NM | 87507-0866 |
| 99307872 | 1.05009E+18 | 4717 HOJAS VERDES | S18 T16N R9E ESTANCIAS DE LAS SOLERAS UNIT 1A 34 | GRIEGO, BERYL A & MAX J | 4717 HOJAS VERDES | SANTA FE | NM | 87507 |
| 99309020 | 1.05009E+18 | 4713 BIENVENIDO A CASA | S18 T16N R9E ESTANCIAS DE LAS SOLERAS UNIT 2A 74 | WEHNER, THOMAS R & BARBARA LANGE | 4713 BIENVENIDO A CASA | SANTA FE | NM | 87507-1303 |
| 99309024 | 1.05009E+18 | UNASSIGNED | S18 T16N R9E ESTANCIAS DE LAS SOLERAS UNIT 2A PARCEL F1 | PULTE HOMES OF NEW MEXICO INC | 7601 JEFFERSON ST NE STE 320 | ALBUQUERQUE | NM | 87109-4496 |
| 99308992 | 1.05009E+18 | 4724 VIENTO DEL NORTE | S18 T16N R9E ESTANCIAS DE LAS SOLERAS UNIT 2A 12 | ALABWEH, HUSAM F | 4724 VIENTO DEL NORTE | SANTA FE | NM | 87507-0866 |
| 99309059 | 1.05009E+18 | 4764 VIENTO DEL NORTE | S18 T16N R9E ESTANCIAS DE LAS SOLERAS UNIT 2A 32 | ARNOLD, DANIEL W & MELANIE W | 4764 VIENTO DEL NORTE | SANTA FE | NM | 87507-0866 |
| 99309035 | 1.05009E+18 | 4749 VIENTO DEL NORTE | S18 T16N R9E LOT 75 ESTANCIAS DE LAS SOLERAS UNIT 2A | BENNETT, GARY E & APRIL JEAN | 4749 VIENTO DEL NORTE | SANTA FE | NM | 87507-0867 |
| 99309055 | 1.05009E+18 | 4104 VIENTO DEL NORTE | S18 T16N R9E ESTANCIAS DE LAS SOLERAS UNIT 2A PARCEL E1 | PULTE HOMES OF NEW MEXICO INC | 7601 JEFFERSON ST NE STE 320 | ALBUQUERQUE | NM | 87109-4496 |
| 99303994 | 1.05009E+18 | 3750 BECKNER RD | S17 T16N R9E LAS SOLERAS 17 | EAKIN, D W & H H TRICKEY | 8220 SAN PEDRO DR NE #500 | ALBUQUERQUE | NM | 87113 |
| 99308994 | 1.05009E+18 | 4728 VIENTO DEL NORTE | S18 T16N R9E ESTANCIAS DE LAS SOLERAS UNIT 2A 14 | NOLL, JOSEPH & JAMIE | 4728 VIENTO DEL NORTE | SANTA FE | NM | 87507-0866 |
| 99309001 | 1.05009E+18 | 4738 VIENTO DEL NORTE | S18 T16N R9E ESTANCIAS DE LAS SOLERAS UNIT 2A 19 | WEIDNER, KEVIN WAYNE & JANICE RAYE | 4738 VIENTO DEL NORTE | SANTA FE | NM | 87507-0866 |
| 99309068 | 1.05009E+18 | 4768 VIENTO DEL NORTE | S18 T16N R9E LOT 34 ESTANCIAS DE LAS SOLERAS UNIT 2A | ALVAREZ, SALVADOR & YVONNE GARLEY- | 4768 VIENTO DEL NORTE | SANTA FE | NM | 87507-0866 |
| 99308993 | 1.05009E+18 | 4624 VIENTO DEL NORTE | S18 T16N R9E ESTANCIAS DE LAS SOLERAS UNIT 2A PARCEL G1 | PULTE HOMES OF NEW MEXICO INC | 7601 JEFFERSON ST NE STE 320 | ALBUQUERQUE | NM | 87109-4496 |
| 99307869 | 1.05009E+18 | 4719 HOJAS VERDES | S18 T16N R9E ESTANCIAS DE LAS SOLERAS UNIT 1A 35 | RASHID, AIMAN & WAFFAH | 4719 HOJAS VERDES | SANTA FE | NM | 87507-0853 |
| 99308995 | 1.05009E+18 | 4730 VIENTO DEL NORTE | S18 T16N R9E ESTANCIAS DE LAS SOLERAS UNIT 2A 15 | SINGLEDECKER, STEVEN J & AMALIA | 4730 VIENTO DEL NORTE | SANTA FE | NM | 87507 |
| 99309065 | 1.05009E+18 | 4766 VIENTO DEL NORTE | S18 T16N R9E LOT 33 ESTANCIAS DE LAS SOLERAS UNIT 2A | KIRPES, PAUL N | 4766 VIENTO DEL NORTE | SANTA FE | NM | 87507-0866 |
| 99309073 | 1.05009E+18 | 4676 VIENTO DEL NORTE | S18 T16N R9E ESTANCIAS DE LAS SOLERAS UNIT 2A PARCEL D1 | PULTE HOMES OF NEW MEXICO INC | 7601 JEFFERSON ST NE STE 320 | ALBUQUERQUE | NM | 87109-4496 |
| 99309004 | 1.05009E+18 | 4740 VIENTO DEL NORTE | LOT 20, UNIT 2A, 0.146 AC, ESTANCIAS DE LAS SOLERAS, S18 T16N R9E | WOODS, STEPHEN | 4740 VIENTO DEL NORTE | SANTA FE | NM | 87507-0862 |
| 99309022 | 1.05009E+18 | 4750 VIENTO DEL NORTE | S18 T16N R9E ESTANCIAS DE LAS SOLERAS UNIT 2A 25 | TRUJILLO, JAIME & JESSICA A | 4750 VIENTO DEL NORTE | SANTA FE | NM | 87507-0866 |
| 99309048 | 1.05009E+18 | 4758 VIENTO DEL NORTE | S18 T16N R9E ESTANCIAS DE LAS SOLERAS UNIT 2A 29 | POTEAT, NORMAN D | 4758 VIENTO DEL NORTE | SANTA FE | NM | 87507-0866 |
| 99309008 | 1.05009E+18 | 4716 BIENVENIDO A CASA | S18 T16N R9E LOT 61 ESTANCIAS DE LAS SOLERAS UNIT 2A | WELLS, STEVEN R & DEBORAH A POELKER | 4716 BIENVENIDO A CASA | SANTA FE | NM | 87507-1302 |
| 99309069 | 1.05009E+18 | 4135 LAS BRISAS | S18 T16N R9E ESTANCIAS DE LAS SOLERAS UNIT 2A 38 | ROMERO, CHRIS P & CYNTHIA L | 4135 LAS BRISAS | SANTA FE | NM | 87507-0864 |
| 99307903 | 1.05009E+18 | 4701 A LAS BRISAS | S18 T16N R9E ESTANCIAS DE LAS SOLERAS UNIT 1A PARCEL B1 | PULTE HOMES OF NEW MEXICO, INC | 7601 JEFFERSON ST NE STE 320 | ALBUQUERQUE | NM | 87109 |
| 99309002 | 1.05009E+18 | 4719 VIENTO DEL NORTE | S18 T16N R9E ESTANCIAS DE LAS SOLERAS UNIT 2A 60 | SMARZEWSKI, JOHN S & JODI KAY DAVIS | 4719 VIENTO DEL NORTE | SANTA FE | NM | 87507 |
| 99308996 | 1.05009E+18 | 4732 VIENTO DEL NORTE | S18 T16N R9E ESTANCIAS DE LAS SOLERAS UNIT 2A 16 | JO, YONG I & MYONG | 4732 VIENTO DEL NORTE | SANTA FE | NM | 87507-0866 |
| 99309047 | 1.05009E+18 | 4753 VIENTO DEL NORTE | S18 T16N R9E LOT 77 ESTANCIAS DE LAS SOLERAS UNIT 2A | CANDELARIA, LEANNA | 4753 VIENTO DEL NORTE | SANTA FE | NM | 87507-0867 |
| 99308997 | 1.05009E+18 | 4722 VIENTO DEL NORTE | S18 T16N R9E LOT 11 ESTANCIAS DE LAS SOLERAS UNIT 2A | REILLY, TERRENCE J & KIMBERLY | 4722 VIENTO DEL NORTE | SANTA FE | NM | 87507-0866 |

March 6, 2025

# Planning Commission

Case 2023-9585: 4000 & 4200 Beckner Road Meridian Final Serial Subdivision Plat

# ATTACHMENT D

Applicant Submittals

**ORION West LLC**
Development | Land Use | Planning | Project Management
PO Box 5744, Santa Fe, NM 87502-5744
832.338.0364

November 11, 2024

Current Planning Division
City of Santa Fe
200 Lincoln Avenue
Santa Fe, NM 87501

**RE: Las Soleras Meridian Medical Center Final Plat Subdivision Application**

Dear Janice:

This letter is respectfully submitted on behalf of Santa Fe Las Soleras Medical Development LLC, Las Soleras Center LLC, and Las Soleras Village LLC in the application of a preliminary subdivision plat for the commercial properties at 4000 Beckner Road and 4200 Beckner Road. The subdivision is identified for uses allowed in a C-2, General Commercial Zoning District. Aside from the Meridian Medical Office Building on Tract 18B-2, which is currently built and operational, an ambulatory surgical center being designed on Tract 18B-5. No other uses or projects have been identified for the other lots created by the subdivision.

**Application Summary**

The proposed subdivision is located within the Las Soleras Master Plan area, encompassing a total of ±47.83 acres. The site is comprised of two parcels:

- **Parcel 18B:** ±18.01 acres at 4200 Beckner Road, owned by Santa Fe Las Soleras Medical Development LLC.
- **Parcel 18A:** ±29.82 acres at 4000 Beckner Road, owned by Las Soleras Center LLC and Las Soleras Village LLC.

The total number of lots proposed with this subdivision application is six. Of these, five new lots will be created within Parcel 18B. Due to a prior administrative lot- split involving parcels 18B and 18A within the last five years, the City of Santa Fe requires that Parcel 18A be included in this subdivision application. Development considerations for Lot 18A will be addressed in Phase II.

**Proposed Lots:** The lots to be created within this subdivision are as follows:

| LAND USE ASSUMPTIONS | | | | |
|---|---|---|---|---|
| LOT | TRACT | USE | ACREAGE | SIZE (SF) |
| 1 | 18 B-1 | Drive-thru coffee shop | 1.156 | 2,500 w/ 1 drive-thru |
| 2 | 18 B-2 | Medical Office (Developed) | 9.743 | 95,000 |
| 3 | 18 B-3 | Medical/Dental Office | 2.059 | 20,000 |
| 4 | 18 B-4 | Medical/Dental Office | 2.303 | 20,000 |
| 5 | 18 B-5 | Medical Center | 2.7404 | 20,000 |
| 6 | 18 A | Undetermined (Phase II) | 29.817 | - |

The proposed usage is assumed and based off the Traffic Impact Analysis (TIA) completed by Tierra West for Las Soleras, Tracts 18A & 18B. The sizes stated in the accompanying table are approximations based on lot acreage, open space requirements, and estimated parking needs. These estimates are preliminary, and final development plans and building permits will be submitted in compliance with the Santa Fe City Code (SFCC).

**Phase II Considerations:** Lot 18A, which comprises 29.817 acres, is included in this subdivision application but will not undergo any changes in lot size as part of Phase I. Development plans for Lot 18A will be detailed and addressed in Phase II of the project.

**Subdivision Approval Criteria**

(1) In all subdivisions, due regard shall be shown for all natural features such as vegetation, water courses, historical sites and structures, and similar community assets that, if preserved, will add attractiveness and value to the area or to Santa Fe.

Response: The Project shows due regard for natural features and enhancement of community assets through the preservation of open space, landscaping improvements, and construction of trails along in accordance with the Las Soleras Master Plan.

(2) The planning commission shall give due regard to the opinions of public agencies and shall not approve the plat if it determines that in the best interest of the public health, safety or welfare the land is not suitable for platting and development purposes of the kind proposed. Land subject to flooding and land deemed to be topographically unsuited for building, or for other reasons uninhabitable, shall not be platted for residential occupancy, nor for other uses that may increase danger to health, safety or welfare or aggravate erosion or flood hazard. Such land shall be set aside within the plat for uses that will not be endangered by periodic or occasional inundation or produce unsatisfactory living conditions. See also Section 14-5.9 (Ecological Resource Protection Overlay District) and Section 14-8.3 (Flood Regulations).

Response: The site is not located in a designated flood plain. Land is well suited for development.

(3) All plats shall comply with the standards of Chapter 14, Article 9 (Infrastructure Design, Improvements and Dedication Standards).

Response: The Subdivision Plat for Las Soleras Tract 18A & 18B adheres to the standards outlined in Chapter 14, Article 9. The Final plat includes the identification of existing and proposed roadway improvements, wet and dry utility connections and lines, and utility easements, as required. While specific land uses for the proposed lots are not included at this time, future compliance with infrastructure elements such as parking area configurations will be ensured during the review of construction drawings for specific developments. Additionally, all conditions of approval and technical corrections outlined in the Preliminary Plat process have been addressed for the Final Plat to fully meet the requirements of Chapter 14, Article 9.

(4) A plat shall not be approved that creates a nonconformity or increases the extent or degree of an existing nonconformity with the provisions of Chapter 14 unless a variance is approved concurrently with the plat.

Response: The property contains no existing nonconformity. No nonconformity is being created with this Subdivision Plat.

(5) A plat shall not be approved that creates a nonconformity or increases the extent or degree of an existing nonconformity with applicable provisions of other chapters of the Santa Fe City Code unless an exception is approved pursuant to the procedures provided in that chapter prior to approval of the plat.

Response: The property contains no existing nonconformity. No nonconformity is being created with this Subdivision Plat.

**Terrain Management**

The site slopes from the south along I-25 to the north along Beckner Road. No portion of the property contains natural slopes greater than 30%. Stormwater from the developed portions of the site is directed to the existing detention ponds and surface discharges at the northwest corner of the site, as shown in the Grading Plan (sheet 7). Storm water from the undeveloped portions of the site sheet generally flows west and northwest also shown in sheet 7. The detention plan is adequate to ensure there will be no increases to historic flow. Additionally, each individual lot will be responsible for further stormwater control features for their proposed development at the time of development plan and/or building permit application.

**Landscape**

Landscaping and site design plans are provided in accordance with Santa Fe City Code §14-8.4 requirements for non-residential development. Plantings will include a combination of drought-tolerant deciduous and evergreen trees, shrubs, and ornamental native grasses, as referenced in Landscape Exhibit, sheet 9. All disturbed areas will be revegetated with a native grass seed mix. Landscape plans for future development will be submitted for each lot at the time of development plan application and/or building permit application.

**Parks & Open Space**

Required Open Space for each lot is included in the site data on the Overall Layout Exhibit and Phasing, sheet 2. The commercial lots will be encouraged to incorporate passive water harvesting methods and, therefore, the required open space will be a minimum of 20% of the lot area. Provided Open Space to be determined at the time of building permit or development plan for each lot in accordance with SFCC §14-7.5(D). There are no parks planned for this subdivision.

**Paving and Parking**

The paving plan accommodates access and fire requirements for the five newly created lots. The lot sizes support the land use assumptions and parking requirements. Parking plans for future developments on each lot will be submitted alongside their development plans or building permit applications in accordance with the designated usage.

**Accessibility**

All trails, sidewalks and associated ramps will be ADA-compliant. ADA compliance for each individual lot will be determined at the time of development plans.

**Lighting & Signage**

No new lighting is being proposed with this application. Existing lighting supports lot 18 B-2 and access points for lots 18B-1, 2, 4, and 5; Reference Lighting Exhibit (Sheet 8). Photometric plans will be submitted for each lot at the time of development plan application and/or building permit application.

A proposed monument will be constructed near the subdivision driveway access points on Beckner Road and will comply with the City of Santa Fe Ordinance 14-8-10, the monument sign will be located on lot 18 B-2. Future signage for the undeveloped lots will comply with the City of Santa Fe Ordinance 14-8-10, with locations and specifications being determined at the time of development plan application.

**Future Development/Development Plans**

No zoning changes are requested with this subdivision application. Aside from the Medical Office Building planned for Lot 18B-2, the designated uses for the newly created tracts are not yet determined. All uses will be designated according to the allowable uses within a C-2 district and will be developed individually as users are identified. Each lot will adhere to the SFCC and will require its own development plan as applicable.

This subdivision plat establishes access and utility easements for the newly created tracts. Any additional infrastructure beyond what is currently provided will be addressed through a Development Plan and/or permit application as users are identified for these parcels. Proper design or expansion of infrastructure will require specific uses and projects to be determined beyond what is already under construction.

**Traffic, Access & Pedestrian Flows:**

A Traffic Impact Analysis has been completed and submitted with this application. The impact analysis concludes that the project will have no significant adverse impact on the adjacent transportation system and no offsite mitigation measures are deemed necessary for this project.

Tracts 18B-1 through 18B-5 will have two access points on and off Beckner Road. Primary access will be via the newly constructed south leg of the roundabout at Beckner and Walking Rain Road. This will be a "full service" access allowing both left and right, in and out movements. The secondary access is approximately 550ft. east of Walking Rain Road and will be limited to right-in and right-out movements from Beckner. A third, and future, access point via a private drive from adjacent parcel 19 is anticipated. The location of this future private drive is shown on the Preliminary Plat.

**Fire Protection and Emergency Access**

The project is served by two access points, with on-site driveways designed to meet the standards set forth by the International Fire Code (IFC) for emergency access. Fire protection is further supported by two existing fire hydrants, as shown in the Utility Exhibit Phase 1 (Sheet 4). Future developments within this subdivision will comply with all applicable fire codes.

**Archaeology and Gunnison's Prairie Dog Relocation**

Archaeology clearance was granted to the entire Los Soleras subdivision on February 5, 2009, as a condition of approval. As this project is located within the Los Soleras Subdivision, no additional archaeological survey or clearance is required.

The site was previously cleared for the current development in lot 18 B-2 and will be assessed for Gunnison's prairie dogs prior to the start of construction on newly created lots. Any colonies will be relocated in keeping with SFCC 14-8.12 prior to start of construction.

**Sewer and Water**

Development on Tract 18B-2 is complete, a utility easement for new water and sewer lines will be established with this subdivision plat along the east and west access drives from Beckner Road to accommodate future private water and sewer connections for parcels 18B-1,3,4 and 5. The proposed utility improvements include an 8-inch water line

and an 8-inch sanitary sewer line, as indicated in the Utility Exhibit (Sheet 4). The lines are designed to support the anticipated capacities required for future developments within the subdivision. Please refer to the Utility Exhibit for additional details on the proposed line sizes and capacities.

**Development Water Budget**

Each future project and associated tract will be responsible to create a water budget and source water for the project specific to that project's individual use.

**Environmental Services/Solid Waste**

Dumpster locations to be subject to review approval at the time of Development plan or building permit application for each lot.

**Addressing/GIS**

The property is currently addressed as 4200 Beckner Road. We will request individual lot addresses prior to recordation.

**Santa Fe Public Schools**

This is a commercial subdivision application and thus will have no impact on the Santa Fe Public Schools.

**Transportation Planning (MPO)**

In accordance with the requirements of the Las Soleras Master Plan, this project includes the installation of a pedestrian trail system south of Beckner, within the 100-foot open space corridor. The trail is situated on the southern end of the subdivision, as depicted in the Access Exhibit (Sheet 3) and will eventually connect to the broader trail system as neighboring developments are completed.

Bus service exists on Beckner Road and Wellness Way in the vicinity of the proposed subdivision.

**Affordable Housing**

Although future uses for the newly created tracts are not known to be residential projects as allowed in a C-2 district, it is understood residential projects will be required to follow the City of Santa Fe affordable housing requirements and ordinances.

**Early Neighborhood Notification**

An Early Neighborhood Notification Meeting was held on November 27, 2023. The applicant presented a slide show that featured conceptual project plans and other relevant information. The attendees included the project team, and City staff, no members of the public were in attendance.

In support of this request, the following documentation is submitted as part of this application:

1. Final Subdivision Application
2. Special Warranty Deed
3. Legal Lot of Record

4. Recorded Development Plan – Meridian Medical Office Building project, Case# 2022-5621
5. Archeological Clearance
6. Terrain Management Report
7. Traffic Impact Analysis
8. Drainage Report
9. Submittal Plans

Thanks for your consideration in review of this application. Please contact me with any questions or requests for additional information at: 832-338-0364; or via email at: brian.nenninger@orion-west.com .

Sincerely,



Brian Nenninger, P.E.
Orion West, LLC

# SUBDIVISION APPLICATION

## Parcel Information

Project Name: Las Soleras Meridian Medical Center Subdivision

Address: 4000 & 4200 Beckner Road

Property Size: 47.83 acres

Current Use of Land: Medical Office & Undevleoped

Proposed Use of Land: Uses allowed in a C-2 District

Does a Rezoning application accompany this application? YES ☐ NO ☒

Are any variances required? YES ☐ NO ☒

Preapplication Conference Date: June 22, 2023

Early Neighborhood Notice (ENN) meeting date: November 27, 2023

Zoning: C-2 District

**Check One:** Preliminary Plat ☒ Final Plat ☐

UPC Number: Parcel 18B: 1050094266364000000
Parcel 18A: 1050094338410000000

## 18B - 18.01 acres Property Owner Information

Name: Santa Fe Las Soleras Medical Development LLC ATTN: Mike Conn

Address: 500 YGNACIO VALLEY ROAD, SUITE 325, WALNUT CREEK, CA 94596

Phone: 925-302-1400 E-mail Address: mconn@mpcca.com

## 18A - 29.82 acres Property Owner Information

Name: Las Soleras Center LLC and Las Soleras Village LLC ATTN: Gordon Skarsgard

Address: 8220 San Pedro NE Suite 120/ Albuquerque, NM 87113

Phone: 505-998-9091 E-mail Address: skip@ziarisingnm.com

## Applicant/Agent Information (if different from owner)

Company Name: Orion West LLC

Name: Brian Nenninger

*First* *Last*

Address: 2213 Brothers Road, STE 800

*Street Address* *Suite/Unit #*

Santa Fe, NM 87505

*City* *State* *ZIP Code*

Phone: (832) 338-0364 E-mail Address: brian.nenninger@orion-west.com

Correspondence Directed to: ☐ Owner ☒ Applicant ☐ Both

## Agent Authorization (if applicable)

I am/We are the owner(s) and record title holder(s) of the property located at: 4000 & 4200 Beckner Road

I/We authorize Orion West, LLC, Attn: Brian Nenninger to act as my/our agent to execute this application.

Signed: Mike Conn Date: 09/01/2023

Signed: Gordon L Skarsgard Date: 10/19/2023

## Submittal Checklist (Requirements found in Section 14-3.7 SFCC 1987)

☐ *Six (6) 24"x36" plan sets and one CD containing the same information as the paper set (PDF) are required. Please include the following:*

| | | | | | | | | | |
|---|---|---|---|---|---|---|---|---|---|
| ☒ | Letter of Application (intent, location, acreage) | ☒ | Legal Lot of Record, Legal Description | ☒ | Preliminary Plat or Final Plat | ☒ | Landscape, Parking and Lighting Plan, Signage Specifications | ☒ | Terrain Management Plans (as required by Section 14-8.2 SFCC 2001) |
| ☒ | Traffic Impact Analysis (if required) | ☒ | Sewer and Water Plan (Profiles and details – Final Plat only) | ☒ | Phasing Plan (if applicable) | ☒ | Archaeological Clearance (if applicable) | ☒ | Approved/Recorded Development Plan Case# 2022-5621 |
| ***Subdivisions per Section 14-3.7 SFCC 1987:*** | | | | | | | | | |

**Preliminary Plat (Section 14-3.7(B)(3) SFCC 1987)**
See above for submittal requirements. See also Section 14-9 Infrastructure Design, Improvement and Dedication Standards.

**Final Plat (Section 14-3.7(B)(4) SFCC 1987)**
The final plat shall conform substantially to the preliminary plat as approved.

## Signature

*I hereby certify that the documents submitted for review and consideration by the City of Santa Fe have been prepared to meet the minimum standards outlined in the Land Development Code, Chapter 14 SFCC 1987. Failure to meet these standards may result in the rejection of my application. I also certify that I have met with the City's Current Planning staff in a preapplication meeting to verify that the attached proposal is in compliance with the City's zoning and development plan requirements.*

Signature: Brian J. Pennington Date: 11/8/2024

A case manager will be assigned to your project and will notify you within 10 business days if any additional information is needed. After your application has been reviewed by City staff, you will be contacted by us regarding public notice requirements. A packet of information and instructions will be provided regarding the required mailing and sign posting. Please contact the Land Use Department staff at (505) 955-6585 with any questions.

Prima Title, LLC
file# 22-0224

# SPECIAL WARRANTY DEED

***Beckner Road Partners, LLC***, a New Mexico limited liability company ("**Grantor**"), for consideration paid, grants and conveys to ***Santa Fe Las Soleras Medical Development LLC***, a Delaware limited liability company ("**Grantee**"), whose address is 4500 Dorr Street, Toledo, Ohio 43615, the real property located in Santa Fe County, New Mexico legally described as follows:

> Tract 18B of Las Soleras, as shown and delineated on plat of survey entitled "Lot Split Survey Plat prepared for Las Soleras Village LLC & Las Soleras Center LLC of Tract 18 Las Soleras...lying within Section 17 T.16N., R.9E., N.M.P.M. City and County of Santa Fe, N.M.", recorded December 12, 2022 in Plat Book 898, Pages 007-008, # 2002919, records of Santa Fe County, New Mexico.

SUBJECT TO: Sewer maintenance and garbage disposal assessments not yet due and payable.

SUBJECT TO: Reservations and exceptions contained in Patents from the United States of America to Samuel A. Larson, recorded December 10, 1921 in Patent Book A, Page 180 and Patent recorded November 4, 1943 in Patent Book C, Page 93, records of Santa Fe County, New Mexico.

SUBJECT TO: Terms and conditions contained in Annexation Agreement recorded March 4, 2010 as Instrument # 1592456, records of Santa Fe County, New Mexico.

SUBJECT TO: Terms and conditions contained in City of Santa Fe Ordinance recorded March 19, 2010 as Instrument # 1593744, records of Santa Fe County, New Mexico.

SUBJECT TO: Terms and conditions contained in City of Santa Fe Ordinance recorded March 19, 2010 as Instrument # 1593745, records of Santa Fe County, New Mexico.

SUBJECT TO: Easements and rights incident thereto, notes, conditions and restrictions, as shown and delineated on plat of survey entitled "Las Soleras Annexation, General Plan Amendment, Rezoning to Multiple Zoning Districts", recorded March 4, 2010 in Plat Book 714, Pages 014-026, # 1592455, records of Santa Fe County, New Mexico.

SUBJECT TO: Easements and rights incident thereto, notes, conditions and restrictions, as shown and delineated on plat of survey entitled "Beckner Road Dedication Plat prepared for Presbyterian Healthcare Services Spectrum Acquisition Santa Fe LLC Las Soleras Village, LLC Las Soleras Center, LLC and Beckner Road Equities, LLC showing public r/w dedication of a portion of Tracts 8, 10, 18-19...", recorded October 31, 2016 in Plat Book 809, Pages 003-004, # 1808503, records of Santa Fe County, New Mexico.

SUBJECT TO: Notes, restrictions and conditions, as shown and delineated on plat of survey entitled "Las Soleras Amended Master Plan Township 16N, Range 9E, Sections 7, 8, 17 & 18.", recorded January 4, 2017 in Plat Book 812, Pages 037-046, # 1814047 and recorded July 17, 2018 in Plat Book 836, Pages 047-050D, # 1862707, records of Santa Fe County, New Mexico.

SUBJECT TO: Easements and rights incident thereto, notes, conditions and restrictions, as shown and delineated on plat of survey entitled "Easement Survey Plat Prepared For VDLS LLC, A New Mexico Limited Liability Company of Tract 17 and Tract 18 Las Soleras", recorded August 17, 2021 in Plat Book 881, Pages 008-009, Inst # 1962900, records of Santa Fe County, New Mexico.

SUBJECT TO: Easements and rights incident thereto, notes, conditions and restrictions, as shown and delineated on plat of survey entitled "Lot Split Survey Plat prepared for Las Soleras Village LLC & Las Soleras Center LLC of Tract 18 Las Soleras...lying within Section 17 T.16N., R.9E., N.M.P.M. City and County of Santa Fe, N.M.", recorded December 12, 2022 in Plat Book 898, Pages 007-008, # 2002919, records of Santa Fe County, New Mexico.

SUBJECT TO: Easement and rights incident thereto contained in Public Service Company of New Mexico Easement (Electric), executed by Las Soleras Village, LLC, a New Mexico limited liability company, recorded August 25, 2016 as Instrument # 1802604, records of Santa Fe County, New Mexico.

SUBJECT TO: Easement and rights incident thereto contained in Public Service Company of New Mexico Easement (Electric), executed by Las Soleras Center, LLC, a New Mexico limited liability company, recorded August 25, 2016 as Instrument # 1802605, records of Santa Fe County, New Mexico.

SUBJECT TO: Taxes for 2023 and subsequent years.

With special warranty covenants.

Witness my hand and seal this 25 day of January, 2023.

**GRANTOR: Beckner Road Partners, LLC,**
a New Mexico limited liability company

By: Nexus BRP JV, LLC, a Delaware limited liability company, its Manager

By: Nexus BRP Member, LLC, a Delaware limited liability company, its Operating Member

Scott Herbert, Managing Member

***(Notary Acknowledgment on Following Page)***

## ACKNOWLEDGMENT

STATE OF NEW MEXICO )
) ss
COUNTY OF Santa Fe )

The foregoing instrument was acknowledged before me this 25 day of January, 2023 by **Scott Herbert** as Managing Member of Nexus BRP Member, LLC, a New Mexico limited liability company, Operating Member of Nexus BRP JV, LLC, a Delaware limited liability company, as Manager of Beckner Road Partners, LLC, a New Mexico limited liability company.

Gregg Robinson
Title of Office: _____

[Official Stamp]

STATE OF NEW MEXICO
NOTARY PUBLIC
GREGG S. ROBINSON
COMMISSION #1091945
COMMISSION EXPIRES 07/02/2024

G:\Data\WP60\2020\22095\Las Soleras\Docs\Closing Docs\SWD Beckner To Meridian - Tract 18B 012423.Docx

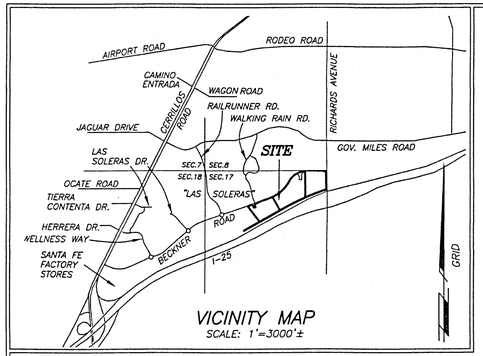


VICINITY MAP
SCALE: 1"=3000'±

## REFERENCE DOCUMENTS

1. BECKNER ROAD DEDICATION PLAT PREPARED FOR PRESBYTERIAN HEALTHCARE SERVICES, SPECTRUM ACQUISITION SANTA FE LLC, LAS SOLERAS VILLAGE, LLC; LAS SOLERAS CENTER, LLC AND BECKNER ROAD EQUITIES, INC. BY DIEGO J. SISNEROS, NMPS 13986. PLAT RECORDED AS INSTRUMENT NUMBER 1808503 ON THE 31ST DAY OF OCTOBER, 2016 AND PLAT BOOK 809 PAGES 3-4, IN THE SANTA FE COUNTY CLERKS OFFICE.

2. EASEMENT SURVEY PLAT PREPARED FOR VDLS LLC, A NEW MEXICO LIMITED LIABILITY COMPANY OF TRACT 17 AND TRACT 18 LAS SOLERAS, PREPARED BY DIEGO J. SISNEROS, NMPLS 13986, RECORDED ON THE 17TH DAY OF AUGUST AS INST.#1962900 IN BOOK 881 PAGE 08-09.

ALL OTHER REFERENCE DOCUMENTS AS NOTED HEREON.

## UTILITY COMPANIES

Mike Mortes — 11/15/2022
COMCAST — DATE

IN APPROVING THIS PLAT, PUBLIC SERVICE COMPANY OF NEW MEXICO (PNM), NEW MEXICO GAS COMPANY (NMGC) AND QWEST CORPORATION d/b/a CENTURYLINK (QWEST) DID NOT CONDUCT A TITLE SEARCH OF THE PROPERTIES SHOWN HEREON. CONSEQUENTLY, PNM, NMGC AND QWEST DO NOT WAIVE OR RELEASE ANY EASEMENT OR EASEMENT RIGHTS WHICH MAY HAVE BEEN GRANTED BY PRIOR PLAT, REPLAT, OR OTHER DOCUMENT AND WHICH ARE NOT SHOWN ON THIS PLAT.

PNM ELECTRIC SERVICE — 11/17/2022
DATE

Pamela C. Stone — 11/17/2022
NM GAS COMPANY — DATE

CENTURY LINK DISCLAIMER.

THIS PLAT HAS BEEN APPROVED FOR EASEMENT PURPOSES ONLY THE SIGNING OF THIS PLAT DOES NOT IN ANY WAY GUARANTEE TELEPHONE SERVICE TO THE SUBDIVISION.

Doug Dale — 11/15/2022
QWEST CORPORATION d/b/a CENTURY LINK(QWEST) — DATE

## SURVEYORS CERTIFICATE

I HEREBY CERTIFY THAT THIS PLAT IS A TRUE REPRESENTATION OF A SURVEY COMPLETED UNDER MY PERSONAL SUPERVISION ON THE 19TH DAY OF DECEMBER, 2020 TO THE BEST OF MY KNOWLEDGE, THE SURVEY AND PLAT ARE CORRECT, TRUE AND MEET THE, MINIMUM STANDARDS FOR LAND SURVEYS IN NEW MEXICO.

DIEGO J. SISNEROS, NMPS#13986, 11/1/2022

DIEGO J. SISNEROS — NEW MEXICO — 13986 — REGISTERED PROFESSIONAL SURVEYOR

SANTA FE COUNTY TREASURER — Dec. 2, 22
DATE

COUNTY OF SANTA FE )SS
STATE OF NEW MEXICO )
I hereby certify that this instrument 2002919
was filed for record on the 12 day of
December, 2022 A.D. at 11:04
o'clock AM, and was duly recorded in
book 898 page(s) 7-8 of the
records of Santa Fe County.

Witness my Hand and Seal of office
KATHARINE E. CLARK
County Clerk, Santa Fe county, N.M.

COUNTY CLERK — KATHARINE E. CLARK — SANTA FE COUNTY NEW MEXICO

Deputy

## DEDICATION AND AFFIDAVIT

KNOW ALL PERSONS BY THESE PRESENTS THAT THE UNDERSIGNED OWNER(S) HAVE CAUSED TO BE DIVIDED THOSE LANDS SHOWN HEREON. THIS SAID REPLAT IS MADE WITH THE FREE CONSENT AND IN ACCORDANCE WITH THE DESIRES OF SAID OWNER(S). THIS REPLAT CONTAINS 47.819 ACRES, MORE OR LESS. THIS LOT SPLIT LIES WITHIN THE PLATTING JURISDICTION OF THE CITY OF SANTA FE, N.M.

PUBLIC UTILITY EASEMENTS SHOWN ON THIS PLAT ARE GRANTED FOR THE COMMON AND JOINT USE OF:
PUBLIC SERVICE COMPANY OF NEW MEXICO ("PNM"), A NEW MEXICO CORPORATION, (PNM ELECTRIC) FOR INSTALLATION, MAINTENANCE, AND SERVICE OF OVERHEAD AND UNDERGROUND ELECTRICAL LINES, TRANSFORMERS, AND OTHER EQUIPMENT AND RELATED FACILITIES REASONABLY NECESSARY TO PROVIDE ELECTRICAL SERVICES. EASEMENTS FOR ELECTRIC TRANSFORMERS/SWITCHGEARS, AS INSTALLED, SHALL EXTEND TEN (10) FEET IN FRONT OF TRANSFORMERS/SWITCHGEAR DOORS AND FIVE (5) FEET ON EACH SIDE.

NEW MEXICO GAS COMPANY FOR INSTALLATION, MAINTENANCE, AND SERVICE FOR NATURAL GAS LINES, VALVES AND OTHER EQUIPMENT AND FACILITIES REASONABLY NECESSARY TO PROVIDE NATURAL GAS SERVICES.

QWEST CORPORATION D/B/A CENTURY LINK QC FOR THE INSTALLATION, MAINTENANCE, AND SERVICE OF SUCH LINES, CABLE, AND OTHER RELATED EQUIPMENT AND FACILITIES REASONABLY NECESSARY TO PROVIDE COMMUNICATION SERVICES.

COMCAST FOR THE INSTALLATION, MAINTENANCE, AND SERVICE SUCH LINES, CABLE AND OTHER RELATED EQUIPMENT AND FACILITIES REASONABLY NECESSARY TO PROVIDE CABLE SERVICES.

INCLUDED IS THE RIGHT TO BUILD, REBUILD, CONSTRUCT, RECONSTRUCT, LOCATE, RELOCATE WITHIN THE EASEMENT, CHANGE, REMOVE, REPLACE, MODIFY, RENEW, OPERATE AND MAINTAIN FACILITIES FOR PURPOSES DESCRIBED ABOVE, TOGETHER WITH FREE ACCESS TO, FROM, AND OVER SAID EASEMENT, WITH THE RIGHT AND PRIVILEGE OF GOING UPON, OVER AND ACROSS ADJOINING LANDS OF GRANTOR FOR THE PURPOSES SET FORTH HEREIN AND WITH THE RIGHT TO UTILIZE THE RIGHT OF WAY AND EASEMENT TO EXTEND SERVICES TO CUSTOMERS OF GRANTEE, INCLUDING SUFFICIENT WORKING AREA SPACE FOR ELECTRICAL TRANSFORMERS, WITH THE RIGHT AND PRIVILEGE TO TRIM AND REMOVE TREES, SHRUBS OR BUSHES WHICH INTERFERE WITH THE PURPOSES SET FORTH HEREIN. NO BUILDING, SIGN POOL (ABOVEGROUND OR SUBSURFACE), HOT TUB, CONCRETE OR WOOD POOL DECKING, OR OTHER STRUCTURE SHALL BE ERECTED OR CONSTRUCTED ON SAID EASEMENTS, NOR SHALL ANY WELL BE DRILLED OR OPERATED THEREON. PROPERTY OWNERS SHALL BE SOLELY RESPONSIBLE FOR CORRECTING ANY VIOLATIONS OF NATIONAL ELECTRICAL SAFETY CODE BY CONSTRUCTION OF POOLS, DECKING, OR ANY STRUCTURES ADJACENT TO OR NEAR EASEMENTS SHOWN ON THIS PLAT.

EASEMENTS SHALL BE BINDING UPON THE UNDERSIGNED AND THEIR SUCCESSORS AND ASSIGNS

STORMWATER AGREEMENT:
PROPERTY OWNER(S) HEREBY AGREE THAT ALL STORM WATER EASEMENTS AND ANY OTHER DRAINAGE IMPROVEMENTS ON PRIVATE PROPERTY WILL BE MAINTAINED AND KEPT FULLY FUNCTIONAL AS ORIGINALLY DESIGNED AND CONSTRUCTED WITHIN PRIVATE PROPERTY BOUNDARIES BY BECKNER ROAD EQUITIES, INC. LOT OWNERS ASSOCIATION(OWNER) AND SUBSEQUENT HEIRS, ASSIGNS, AND FUTURE OWNERS. THE CITY IS HEREBY GRANTED THE FOLLOWING: (1) ACCESS FOR INSPECTION OF SAID IMPROVEMENTS; (2) IN THE EVENT OF DRAINAGE FACILITY MAINTENANCE DEFICIENCY AND AFTER TEN (10) DAYS WRITTEN NOTICE TO THE RESPECTIVE PROPERTY OWNER, TO ENTER AND RESTORE FULL FUNCTIONAL CAPACITY OF THE DRAINAGE IMPROVEMENTS; AND (3) TO LIEN THE PROPERTY FOR BOTH DIRECT AND INDIRECT COSTS ASSOCIATED WITH SUCH WORK. BY SIGNATURE AFFIXED TO THIS INSTRUMENT, THE PROPERTY OWNER(S) APPROVE AND AGREE THAT THIS AGREEMENT IS BINDING PERPETUALLY, RUNNING WITH THE LAND, ON PRESENT AND FUTURE OWNERS, HEIRS, AND ASSIGNS.

OWNERS TRACT 18:
LAS SOLERAS VILLAGE LLC, A N.M. LIMITED LIABILITY CO.,

Gordon L. Skarsgard
GORDON L. SKARSGARD, MANAGING MEMBER

STATE OF NEW MEXICO NOTARY PUBLIC DIANA SLIWICKI Commission # 1115266 My Comm. Exp. June 17, 2024

STATE OF NEW MEXICO )
)SS
COUNTY OF BERNALILLO )
THE FOREGOING INSTRUMENT WAS ACKNOWLEDGED AND SUBSCRIBED BEFORE ME BY GORDON L. SKARSGARD, MANAGING MEMBER, LAS SOLERAS VILLAGE LLC, A N.M. LIMITED LIABILITY CO., ON THIS 22nd DAY OF November, 2022

Diana Sliwicki — 6/17/2024
NOTARY PUBLIC — COMMISSION EXPIRES

June Gardner
JUNE GARDNER, MANAGING MEMBER

STATE OF NEW MEXICO NOTARY PUBLIC DIANA SLIWICKI Commission # 1115266 My Comm. Exp. June 17, 2024

STATE OF NEW MEXICO )
)SS
COUNTY OF BERNALILLO )
THE FOREGOING INSTRUMENT WAS ACKNOWLEDGED AND SUBSCRIBED BEFORE ME BY JUNE GARDNER, MANAGING MEMBER, LAS SOLERAS VILLAGE LLC, A N.M. LIMITED LIABILITY CO., ON THIS 22nd DAY OF November, 2022

Diana Sliwicki — 6/17/2024
NOTARY PUBLIC — COMMISSION EXPIRES

TRACT 18: LAS SOLERAS CENTER, LLC., A NEW MEXICO LIMITED LIABILITY COMPANY

Gordon L. Skarsgard
BY: GORDON L. SKARSGARD, OVERSIGHT MANAGER

STATE OF NEW MEXICO NOTARY PUBLIC DIANA SLIWICKI Commission # 1115266 My Comm. Exp. June 17, 2024

STATE OF NEW MEXICO )
)SS
COUNTY OF BERNALILLO )
THE FOREGOING INSTRUMENT WAS ACKNOWLEDGED AND SUBSCRIBED BEFORE ME BY GORDON L. SKARSGARD, OVERSIGHT MANAGER OF LAS SOLERAS CENTER, LLC., A NEW MEXICO LIMITED LIABILITY COMPANY, ON THIS 22nd DAY OF November, 2022

Diana Sliwicki — 6/17/2024
NOTARY PUBLIC — MY COMMISSION EXPIRES

Randall W. Eakin
BY: RANDALL W. EAKIN, OVERSIGHT MANAGER

STATE OF NEW MEXICO NOTARY PUBLIC DIANA SLIWICKI Commission # 1115266 My Comm. Exp. June 17, 2024

STATE OF NEW MEXICO )
)SS
COUNTY OF BERNALILLO )
THE FOREGOING INSTRUMENT WAS ACKNOWLEDGED AND SUBSCRIBED BEFORE ME BY RANDALL W. EAKIN, OVERSIGHT MANAGER OF LAS SOLERAS CENTER, LLC., A NEW MEXICO LIMITED LIABILITY COMPANY, ON THIS 22nd DAY OF November, 2022

Diana Sliwicki — 6/17/2024
NOTARY PUBLIC — COMMISSION EXPIRES

John M. Mahoney
JOHN M. MAHONEY, MANAGING MEMBER

STATE OF NEW MEXICO NOTARY PUBLIC DIANA SLIWICKI Commission # 1115266 My Comm. Exp. June 17, 2024

STATE OF NEW MEXICO )
)SS
COUNTY OF BERNALILLO )
THE FOREGOING INSTRUMENT WAS ACKNOWLEDGED AND SUBSCRIBED BEFORE ME BY JOHN M. MAHONEY, MANAGING MEMBER, LAS SOLERAS VILLAGE LLC, A N.M. LIMITED LIABILITY CO., ON THIS 22nd DAY OF November, 2022

Diana Sliwicki — 6/17/2024
NOTARY PUBLIC — COMMISSION EXPIRES

J. Harmon Burttram
J. HARMON BURTTRAM, OVERSIGHT MANAGER

STATE OF NEW MEXICO )
)SS
COUNTY OF SANTA FE )
THE FOREGOING INSTRUMENT WAS ACKNOWLEDGED AND SUBSCRIBED BEFORE ME BY J. HARMON BURTTRAM, OVERSIGHT MANAGER, LAS SOLERAS VILLAGE LLC, A N.M. LIMITED LIABILITY CO., ON THIS 23 DAY OF November, 2022

Victoria M. Dalton — 5/23/2023
NOTARY PUBLIC — COMMISSION EXPIRES

STATE OF NEW MEXICO NOTARY PUBLIC VICTORIA M. DALTON COMMISSION NUMBER 1061856 EXPIRATION DATE 5-23-2023

J. Harmon Burttram
BY: J. HARMON BURTTRAM, OVERSIGHT MANAGER

STATE OF NEW MEXICO NOTARY PUBLIC VICTORIA M. DALTON COMMISSION NUMBER 1061856 EXPIRATION DATE 05-23-2023

STATE OF NEW MEXICO )
)SS
COUNTY OF SANTA FE )
THE FOREGOING INSTRUMENT WAS ACKNOWLEDGED AND SUBSCRIBED BEFORE ME BY J. HARMON BURTTRAM, OVERSIGHT MANAGER OF LAS SOLERAS CENTER, LLC., A NEW MEXICO LIMITED LIABILITY COMPANY, ON THIS 23 DAY OF November, 2022

Victoria M. Dalton — 5/23/2023
NOTARY PUBLIC — COMMISSION EXPIRES

June Gardner
BY: JUNE GARDNER, OVERSIGHT MANAGER

STATE OF NEW MEXICO NOTARY PUBLIC DIANA SLIWICKI Commission # 1115266 My Comm. Exp. June 17, 2024

STATE OF NEW MEXICO )
)SS
COUNTY OF BERNALILLO )
THE FOREGOING INSTRUMENT WAS ACKNOWLEDGED AND SUBSCRIBED BEFORE ME BY JUNE GARDNER, OVERSIGHT MANAGER OF LAS SOLERAS CENTER, LLC., A NEW MEXICO LIMITED LIABILITY COMPANY, ON THIS 22nd DAY OF November, 2022

Diana Sliwicki — 6/17/2024
NOTARY PUBLIC — COMMISSION EXPIRES

# LOT SPLIT SURVEY PLAT
PREPARED FOR
## LAS SOLERAS VILLAGE LLC
&
## LAS SOLERAS CENTER LLC
OF
TRACT 18 LAS SOLERAS
RECORDED AS PLAT BOOK 809 PAGES 3-4
LYING WITHIN SECTION 17, T.16N., R.9E., N.M.P.M.
CITY AND COUNTY OF SANTA FE, N.M.

2080007

PURPOSE: THE PURPOSE OF THIS PLAT IS TO CREATE TWO LOTS.

## CITY OF SANTA FE APPROVAL CASE#2019-1145

DBZ DAE BETNGESSLER — 12/9/22
CITY ENGINEER FOR LAND USE — DATE

12.7.2022
CITY PLANNER — DATE

## CITY OF SANTA FE NOTES AND CONDITIONS

1. PROPERTY DEVELOPMENT IS REQUIRED TO COMPLY WITH APPLICABLE PROVISIONS OF CHAPTER 14. LAND DEVELOPMENT CODE, SFCC 2001 AND SUBSEQUENT AMENDMENTS.
2. PROPERTY DEVELOPMENT IS REQUIRED TO COMPLY WITH THE PROVISIONS OF EACH CITY OF SANTA FE ORDINANCE ADOPTED PRIOR TO PLAT AND OR DEVELOPMENT PLAN RECORDING WITH THE COUNTY CLERK OR SUBMITTAL FOR A BUILDING PERMIT APPLICATION THAT MODIFIES ANY PROVISION OF CHAPTER 14, LAND DEVELOPMENT CODE, SFCC 1987 AND SUBSEQUENT AMENDMENTS.
3. BUILDABLE AREAS FOR PLATTED PARCELS WILL BE DETERMINED AT THE TIME OF BUILDING PERMIT APPLICATION AS DETAILED IN THE LAND DEVELOPMENT CODE.
4. DEVELOPMENT OF TRACT 18 SHALL BE IN COMPLIANCE WITH ALL CONDITIONS OF APPROVAL FOR LAS SOLERAS CASE M-2008-27, M-2008-28, SD 2008-15, AND ZA-2008-11, AS WELL AS WITH THE ANNEXATION AGREEMENT RECORDED ON 3/04/2010.
5. PRIOR TO NEW CONSTRUCTION, PLAT WILL BE SUBMITTED TO FIRE DEPARTMENT FOR COMPLIANCE WITH THE INTERNATIONAL FIRE CODE. ACCESS GREATER THAN 150 FEET LONG MUST PROVIDE AN EASEMENT OF 20 FEET WIDE AND PROVIDE A FIRE TURNAROUND. (MUST COMPLY WITH APPENDIX D OF IFC 2006 EDITION).
6. ALL FIRE DEPARTMENT ACCESS SHALL BE NO GREATER THAN A 10% GRADE THROUGHOUT AND MAINTAIN 20' MINIMUM WIDTH.
7. FIRE DEPARTMENT ACCESS SHALL NOT BE LESS THAN 20 FEET WIDTH TO ANY NEW CONSTRUCTION.
8. FIRE DEPARTMENT SHALL HAVE 150 FEET DISTANCE TO ANY PORTION OF THE BUILDING ON ANY NEW CONSTRUCTION.
9. SHALL HAVE WATER SUPPLY THAT MEETS FIRE FLOW REQUIREMENTS AS PER IFC OR INSTALL AN AUTOMATIC SPRINKLER SYSTEM.
10. EACH LOT SHALL BE SERVED WITH SEPARATE SEWER AND WATER SERVICES.
11. THE PROPERTY AND STRUCTURES SHALL BE CONNECTED TO THE CITY'S PUBLIC SEWER COLLECTION SYSTEM.
12. 100 FOOT PRIVATE OPEN SPACE EASEMENT WITH FLOATING 20' NON MOTORIZED TRAIL EASEMENT TO BE GRANTED TO THE CITY OF SANTA FE. SAID TRAIL TO BE CONSTRUCTED WITH DEVELOPMENT OF LOTS.
13. ANY AND ALL DEVELOPMENT SHALL MEET THE IFC CODE REQUIREMENTS 2009 EDITION OR THE MOST CURRENT EDITION THE GOVERNING BODY HAS ADOPTED AT THE TIME OF PERMITTING.
14. THIS DEVELOPMENT SHALL COMPLY WITH THE FOLLOWING IFC 2009 EDITIONS FOR ACCESS.
. CHAPTER 5
. APPENDIX D

## FLOOD ZONE

THIS PROPERTY LIES WITHIN OTHER AREAS "ZONE X", AREAS DETERMINED TO BE OUTSIDE THE 0.2% ANNUAL CHANCE FLOODPLAIN AS SHOWN ON FIRM MAP No. 35049C0507E, EFFECTIVE DECEMBER 4, 2012.

"TITLE AND INDEXING INFORMATION FOR COUNTY CLERK"

CURRENT OWNER: LAS SOLERAS VILLAGE LLC, A N.M. LIMITED LIABILITY CO., AND LAS SOLERAS CENTER, LLC., A NEW MEXICO LIMITED LIABILITY COMPANY

TRACT 18 UPC: 1-050-094-338-410

LEGAL DESCRIPTION: TRACT 18 BECKNER ROAD DEDICATION PLAT, RECORDED AS BOOK 809 PAGES 3-4

PLSS LOCATION: LYING WITHIN SECTION 17, T16N, R9E, NMPM

CITY: SANTA FE

COUNTY: SANTA FE

STATE: NEW MEXICO

SHEET 1 OF 2

DAWSON SURVEYS INC.
PROFESSIONAL LAND SURVEYORS
7505 MALLARD WAY, SUITE A
S.F., N.M., 87507 PH505-471-6660
FILE#10419LS DATE: 11/1/2022

8980008

## LEGEND:

- ● DENOTES #4 REBAR NMPLS 13986, OR AS SHOWN, FOUND.
- ○ DENOTES #4 REBAR WITH CAP #13986 TO BE SET UPON RECORDING.
- • DENOTES CALCULATED POINT, NOT SET.
- DENOTES UTILITY BOX, PULL BOX OR METER.
- DENOTES UTILITY POLE.
- DENOTES STORM SEWER MANHOLE.
- —OH— DENOTES OVERHEAD UTILITY LINE.
- ..... DENOTES EASEMENT VACATED BY THIS PLAT.
- —×— DENOTES FENCELINES.
- ━━━ DENOTES BOUNDARY OF LANDS DEALT WITH BY THIS PLAT. INFORMATION OUTSIDE OF THIS BOUNDARY IS BACKGROUND INFORMATION ONLY, NOT VERIFIED FOR ACCURACY AND IS NOT PART OF THIS PLAT. DATA IN PARENTHESIS IS FROM PREVIOUS PLATS OR DOCUMENTS.

## CONTROL SUMMARY:

BEARINGS ARE GRID. DISTANCES ARE REFERRED TO 6800' AMSL. TO CONVERT TO NMSPC CENTRAL ZONE GRID DISTANCES, MULTIPLY BY THE COMBINED SCALE FACTOR OF 0.999583883. VERTICAL DATUM IS NAVD88. ALL DATA IS DERIVED FROM CONTROL ESTABLISHED USING THE NMSP NAD83 PROJECTION FROM THE CARLSON SURVCE2 DATA COLLECTION PROGRAM USING RTK BASE STATION "DAWSON2", ESTABLISHED FROM '92 NGS AND SANTA FE COUNTY G.I.S. CONTROL STATIONS: GRID N1687626.87027, GRID E 1708833.475 AND AN ELEVATION OF 6572.376 VIA STATIC OBSERVATION. A BEARING OF S60°50'03"W WAS ESTABLISHED ON THE SOUTH BOUNDARY BETWEEN NMSHD R/W RAIL

| LINE | BEARING | DIST. |
|---|---|---|
| L1 | N68°11'50"W | 34.42' |
| L2 | N19°55'24"W | 53.23' |
| L3 | S70°04'36"W | 72.00' |
| L4 | S20°32'01"E | 49.22' |
| L5 | S08°51'27"W | 16.53' |
| L6 | S70°18'02"W | 17.92' |
| L7 | S52°31'39"W | 13.10' |

| CURVE | RADIUS | ARC | CHORD | BEARING | DELTA |
|---|---|---|---|---|---|
| C1 | 1549.00' | 961.23' | 945.88' | N47°49'25"E | 35°33'17" |
| C2 | 851.00' | 849.49' | 814.65' | N58°38'36"E | 57°11'38" |
| C3 | 105.00' | 88.47' | 85.87' | N44°03'37"W | 48°16'26" |
| C4 | 65.00' | 40.73' | 40.07' | S09°05'44"E | 35°54'20" |
| C5 | 45.00' | 34.57' | 33.73' | S30°52'05"W | 44°01'17" |
| C6 | 663.00' | 95.45' | 95.36' | S57°00'10"W | 8°14'54" |
| C7 | 476.02' | 66.75' | 66.69' | S66°03'35"W | 8°02'02" |
| C8 | 1548.99' | 121.00' | 120.97' | S67°50'20"W | 4°28'32" |

TIE S88°38'14"W 18.30' TO #4 REBAR 13986

TIE N89°48'35"W 364.91' FROM #5 REBAR 9750

TIE N00°00'00"W 7.07' TO BECKNER ROAD

RIGHT OF WAY REFER TO PLAT 823/37-39

BECKNER ROAD
100' DEDICATED R/W PLAT 804/9-10

#4 REBAR 13986

N66°59'19"E 189.25'

38'SLE, PLAT 809/3-4 L:186.89'

8.73'

20'DE, REF.#1

C2

DETAIL 1"=50'

20'DE, REF.#1

3.93'

N48°57'18"W 48.23'

10' PUE RESERVATION REF.#2

PUBLIC ACCESS EASEMENT PLAT REF.#2

L:304.46

S14°51'52"E 50.75'

20'DE, REF.#1

DETAIL 1"=50'

SLE, PLAT 809/3-4

N42°09'02"E 151.29'

N59°00'26"E 114.95'

N45°44'05"E 80.37'

N31°41'47"E 8.66'

N31°44'20"E 146.71'

20'DE, REF.#1

LA PUERTA
50' R/W PLAT 823/37-39

ESTANCIAS DE LAS SOLERAS UNIT 2A
PLAT 823/37-39

BECKNER ROAD
98' DEDICATED R/W PLAT 809/3-4

N37°02'47"E 62.89'

S59°18'09"E 33.32'

10' PUE, PLAT 809/3-4

98'RW

TRACT 17
LAS SOLERAS
PLAT 714/14-26

S00°00'00"E 1142.31'

RELOCATED SLOPE EASEMENT

TEMPORARY DRAINAGE EASEMENT SUBJECT TO RELOCATION AT TIME OF DEVELOPMENT

Δ:37°45'57"
R:1414.26
A:932.19
CH:S48°05'09"W
915.40

10'PUE, PLAT 809/3-4

C1

98'RW

15' DE, REF. #2 CONFIGURATION SUBJECT TO FINAL DESIGN

TRACT 18A
29.817 Ac.±
26.791 Ac.± w/o OPEN SPACE
#4000 BECKNER ROAD

S24°33'06"E 52.24'
L:15.20'
20'DE, REF.#1
CONTROLLED INLET
DETAIL 1"=50'

50' PNM TRANSMISSION EASEMENT, PLAT 794/1-13

20' DE, PLAT 809/3-4

L:174.56'

C8

40.41'

22.24'

9.56'

N70°32'24"E 197.22'

S19°55'24"E 27.17'

SLOPE EASEMENT HEREBY VACATED PURSUANT TO PLAT 809/3-4, "SLOPE EASEMENTS MAY BE MODIFIED OR VACATED UPON FINAL GRADING OF TRACTS".

SLOPE EASEMENT HEREBY RELOCATED TO TEMPORARY GRADING LOCATION. PURSUANT TO PLAT 809/3-4, "SLOPE EASEMENTS MAY BE MODIFIED OR VACATED UPON FINAL GRADING OF TRACTS".

L=9.83'

℄ T-RAIL 680+00

#4 REBAR L.S. 7014

TRANSFORMER/ SWITCHGEAR EASEMENT, REF.#1

4.5'

8'

20'

OH

13.35'

1.14'

16.98'

10' PUE, REF.#1

DETAIL 1"=50'

WALKING RAIN RD.
56' R/W PLAT 805/34

ESTANCIAS DE LAS SOLERAS UNIT 1A & 1B
PLAT 814/39-43

50' PNM TRANSMISSION EASEMENT, INST.#1802604 & INST.# 1802605

490.00' N70°04'36"E

50' PNM TRANSMISSION EASEMENT, INST.#1802604 & INST.# 1802605

10' PUE, REF.#1

172.21' S70°04'36"W

L1

C3

C4

L4

L2

L3

10' PUE, PLAT 809/3-4

C5

C6

L5

L6

L7

C7

5' TRAIL EASEMENT PLAT 809/3-4

5' TRAIL EASEMENT PLAT 809/3-4

10'

(22.77') 78.55'

N50°20'16"E 96.96'

S71°54'43"E 68.11'

N70°04'36"E 25.78'

SLE, PLAT 809/3-4

38'SLE PLAT 809/3-4

TRACT 18B
18.001 Ac.±
15.797 Ac.± w/o OPEN SPACE
#4200 BECKNER ROAD

N23°09'21"W 666.03'

Δ:5°35'01"
R:11609.16'
L:1131.31'
CH:1130.87'
S63°37'45"W

100' OPEN SPACE EASEMENT, REFER TO NOTE 12.

103.63' BACK. T-RAIL 688+28.92

S60°50'03"W

SOUTHBOUND LANES

INTERSTATE 25
RIGHT OF WAY MAP
NEW MEXICO PROJECT NO.
I-025-5(36)272
JUNE 18, 1971

10' UNDERGROUND UTILITY EASEMENT PLAT 714/14-26

N37°29'40"W 854.56'

1008.79'

215.25'

BACK. T-RAIL

TRACT 19
LAS SOLERAS
PLAT 809/3-4

GRID

SCALE 1" = 100' FEET
100 0 100

DIEGO J. SISNEROS, NMPS#13986 11/1/2022

DIEGO J. SISNEROS NEW MEXICO 13986 REGISTERED PROFESSIONAL SURVEYOR

SHEET 2 OF 2

DAWSON SURVEYS INC.
PROFESSIONAL LAND SURVEYORS
7505 MALLARD WAY, SUITE A
S.F., N.M., 87507 PH505-471-6660
FILE#10419LS DATE: 11/1/2022

# CITY OF SANTA FE
## ARCHAEOLOGICAL SUBMITTAL CHECKLIST/CLEARANCE PERMIT AND APPROVAL

Case File Number AR#28-08 Date Application Submitted Nov. 26, 2008

District: Historic Downtown District ____; River & Trails-Regular ____; Santa Fe Trail ____; Suburban X

Building Sq. Ft. ____ Development Acreage 550 acres

Project Description: ____

Site Address/Location: E. of Cerrillos Rd, N. of I-25 W. of Richards and S. of Nave Ade Property Owner: Beckner Road Equities

Permit: Grading ____; Development ____; Building ____

Applicant Information: Name: Lone Mountain Archaeological Services

Mailing Address: ____ Phone No.: ____

Archaeological Consultant: Lone Mountain Archaeological Services

PLEASE PROVIDE A COPY OF THIS PERMIT WITH YOUR BUILDING PERMIT APPLICATION

**RECONNAISSANCE REPORT**

1. X Project Archaeologist's Resume
2. ___ Vicinity Map
3. ___ Project Site Description
4. ___ Development Project Description
5. ___ Outline of Research & Methodology
6. ___ Site Map or Aerial Photograph at a Minimum of 1"=200' for Downtown Dist. & 1"=400' for other Districts
7. ___ Archival Research
   a. ___ Historic Maps & Aerial Photos
   b. ___ ARMS Files & Archaeological Reports
   c. ___ General Land Office (BLM) Surveys or Land Grant Plats
   d. ___ 1917 Hydrological Survey and Santa Fe Acequia System Report (needed if acequia present or nearby)
   e. ___ National and State Register Nominations (needed if in Historic Downtown District or near Historic Structure)
   f. ___ Historic Photos (needed if in Historic Downtown District)
   g. ___ Information from Title Abstract (if available)
8. ___ 2% Testing (Historic Downtown District Only)
9. ___ Description of Prehistoric & Historic Occupation & Land Use
10. ___ Description of Cultural Remains Discovered and Significance
11. ___ NM Site Inventory Forms and Other Documentation
12. ___ Recommended Site Significance
13. ___ Assessment of Development's Impact on Cultural Remains
14. ___ Recommended Treatment for Site
15. ___ Listing of Sources, i.e. historic maps, aerials, reports, etc.

X ARC APPROVAL: MEETING DATE: 1-5-2009
Special Conditions: ____ Yes (see attachment) ____ No

**TREATMENT PLAN REQUIRED:**

Yes:____ No:____

____ TREATMENT PLAN ARC APPROVAL: MEETING DATE: ____
Special Conditions: ____Yes (see attachment) ____No

**PRELIMINARY TREATMENT REPORT**

___ a. Research Design Outline
___ b. Site Map of Excavations
___ c. Other Documentation: Photographs and New Mexico Site Inventory Forms; if applicable
___ d. Description of Cultural Remains Discovered
___ e. Description of Prehistoric and Historic Occupation and Land Use
___ f. Listing of Sources

**TREATMENT REPORT ARC APPROVAL: MEETING DATE:** ____
Special Conditions: ____ Yes (see attachment) ____ No

**FINAL TREATMENT REPORT**

____ Date Final Report Due ____ Date Final Report Received

PLD10PMS-96

Permit Approved: ____ Date: 2/6/09
Archaeological Review Committee Chairperson

# DEVELOPMENT PLAN
## MERIDIAN MEDICAL OFFICE BUILDING
## 4200 BECKNER ROAD CASE
## #2022-5621

899 13

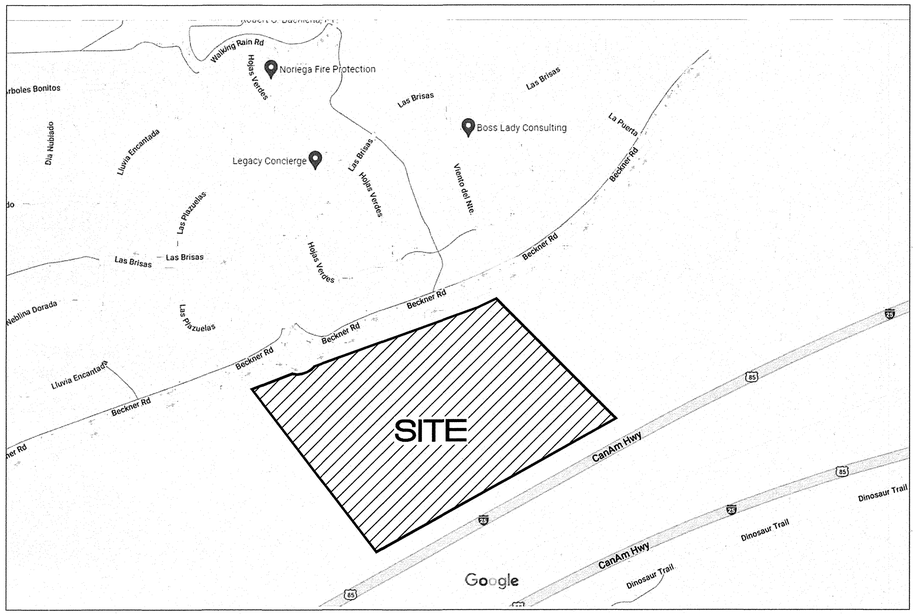


VICINITY MAP:

GRAPHIC SCALE

384 0 192 384

( IN FEET )
1 inch = 384 ft.

| # | CONDITION OF APPROVAL<br>ADMINISTRATIVE | DEPT/DIVISION | COMPLETED BY: |
|---|---|---|---|
| 1 | Contractor shall ensure ADA compliance for construction of required ADA accessible features and appurtenances, as detailed in, and as required, in addition to the approved construction permit documents. Improvements shall comply with ICC ANSI A117.1-2009 Chapters 1-5 and Chapter 7, MUTCD, DOJ, and NM State Statute and Code such as the New Mexico Accessible Parking Checklist,latest published version. | **Land Use Technical Review Division** | **Prior to construction permit application** |
| 6 | An Agreement to Construct and Dedicate (ACD) from the Water Division will be required for all new public water infrastructure. | **Public Utilities Water Resources Division** | **Prior to Construction** |
| 7 | Any re-grading of site over existing water main to maintain a minimum 4-feet cover, not to exceed 5-feet of cover. Depth of existing main to be adjusted to maintain a minimum 4-feet cover, not to exceed 5-feet of cover if site grading impacts these depth requirements. | | |
| 8 | An agreement for metered service (AMS) will be required to install new service | | |
| 10 | If over the 5 AFY threshold applicant shall obtain water rights through the water rights transfer program per SFCC 14-8.13(E)(2)(a). | **Public Utilities Water Division** | **Prior to acquiring building permit** |
| 12 | To allow intensification of use along Beckner Road, the items described in the Beckner Road Extension Punch list dated July1, 2022 must be completed and accepted, or a financial guarantee for those items must be put in place, prior to issuance of any building permit related to the project/property | **Land Use Terrain Management** | **Prior to acquiring building permit** |
| 15 | Any re-grading of site over existing water main to maintain a minimum 4-feet cover, not to exceed 5-feet of cover. Depth of existing main to be adjusted to maintain a minimum 4-feet cover, not to exceed 5-feet of cover if site grading impacts these depth requirements. | **Terrain Management Landscaping** | **Prior to Construction** |
| -- | Emergency backup generator shall comply with City of Santa Fe Noise Ordinance | Land Use Technical Review Division | Prior to Construction |

| # | CONDITION OF APPROVAL<br>Technical Corrections | Department | To be completed by: |
|---|---|---|---|
| 1 | Provide plan set showing the addition of four ADA curb ramps at the connection to the roundabout at the connection to Beckner Road. | **Land Use Technical Review Division (Site Access, ADA)** | **Prior to construction permit application** |
| 2 | Provide detail showing accessible route to the dumpster area | | |
| 3 | Provide note "Driveway and intersection crossings shall not exceed 2% cross slope and 5% running slope. Shall meet ANSI 117.1.4. | | |
| 4 | Any existing sidewalks that are "asphalt" shall be replaced with cement. Any sections of existing sidewalk that do not meet the current code shall be replaced. | | |
| 5 | Provide detail on the stamped cement for the median area, type, color and stamp pattern. | | |
| 16 | Fire apparatus access shall have an unobstructed width of not less than 20 feet exclusive of shoulders and an unobstructed vertical clearance of not less than 13 feet 6 inches (IFC 2015 Section 503.2.1) | **Fire Prevention** | **At the time of any new construction or remodel.** |
| 17 | 503.4 Obstruction of Fire Apparatus Access Roads. Fire apparatus access roads shall not be obstructed in any manner, including the parking of vehicles. The minimum widths and clearances established in Section 503.2.1 and 503.2.2 shall be maintained at all times. | | |
| 18 | Shall meet the 150 feet driveway requirements must be met as per IFC, or an emergency turn-around that meets the IFC requirements shall be provided. (Appendix D Table D103.4) 4. Shall comply with table D103.4 Requirements for Dead-End Fire Apparatus Access Roads. | **Fire Prevention** | **At the time of any new construction or remodel.** |
| 19 | Shall comply with table D103.4 Requirements for Dead-End Fire Apparatus Access Roads. | | |
| 20 | Fire Department shall have 150 feet distance to any portion of the building on any new construction. (IFC 2015 section 503.1.1 ) | | |
| 21 | 507.5 Fire hydrant systems. Fire hydrant systems shall comply with Sections 507.5.1 through 507.5.6. 507.5.1 Where required. Where a portion of the facility or building hereafter constructed or moved into or within the jurisdiction is more than 400 feet (122 m) from a hydrant on a fire apparatus access road, as measured by an approved route around the exterior of the facility or building. | | |
| 22 | Shall have water supply that meets fire flow requirements as per IFC (Appendix B). | | |
| 23 | Shall comply with Section D102.1 Access and Loading (75,000 lbs). | | |
| 24 | Shall meet the 150 feet driveway requirements must be met as per IFC, or an emergency turn-around that meets the IFC requirements shall be provided. (Appendix D Table D103.4) | | |
| 25 | Shall comply with IFC 2015 Section D103.2 Grade. Fire apparatus access roads shall not exceed 10 percent in grade. | | |
| 26 | Shall comply with IFC 2015 Section D103.5 Fire apparatus access road gates. | | |
| 27 | Shall comply with D105 Aerial Fire Apparatus Access Roads. (width and proximity to building) | | |
| 28 | Shall comply with Section D106 Multiple-Family Residential Developments. | | |
| 29 | D107.1 One- or two-family dwelling residential developments. Developments of one- or two-family dwellings where the number of dwelling units exceeds 30 shall be provided with two separate and approved fire apparatus access roads. | | |
| 30 | D107.2 Remoteness. Where two fire apparatus access roads are required, they shall be placed a distance apart equal to not less than one-half the length of the maximum overall diagonal dimension of the property or area to be served measured in a straight line between accesses. | | |
| 31 | Shall meet the IFC code requirements 2015 edition or the most current edition the governing body has adopted at the time of permitting. | | |

CITY APPROVALS

APPROVED BY THE SANTA FE PLANNING COMMISSION AT THEIR MEETING ON September 1, 2022

CASE # 2022 - 5621

PLANNING COMMISSION CHAIRPERSON — DATE 2/14/23

PLANNING COMMISSION ~~SECRETARY~~ VICE CHAIR Jessica Conn Lawrence — DATE 2/14/23

RENEWED BY THE CITY OF SANTA

CITY PLANNER — DATE 2/9/23

CITY ENGINEER FOR LAND USE Dee Beingessner — DATE 2/9/23

AFFIDAVIT

KNOWN ALL MEN BY THESE PRESENTS THAT THE UNDERSIGNED OWNERS HAVE CAUSED THIS FINAL DEVELOPMENT PLAN TO BE PREPARED. ALL THAT APPEARS ON THIS PLAN IS MADE WITH THE FREE CONSENT AND IN ACCORDANCE WITH THE DESIRES OF THE OWNER.

OWNER'S PRINTED NAME Michael D. Conn, Santa Fe Las Soleras Medical Development, LLC

OWNER'S SIGNATURE

THE FOREGOING WAS SWORN, ACKNOWLEDGED, AND SUBSCRIBED BEFORE ME BY Michael D. Conn THIS 3rd DAY OF February 2023

NOTARY PUBLIC — MY COMMISSION EXPIRES 02/22/2024

MODIFICATIONS

SITE PLAN MODIFICATIONS ARE SUBJECT TO APPROVAL BY THE CITY OF SANTA FE AS PART OF THE BUILDING PERMIT PROCESS.

JUANITA LUBRANO
COMM. # 2322015
NOTARY PUBLIC • CALIFORNIA
CONTRA COSTA COUNTY
MY COMMISSION EXPIRES
FEBRUARY 22, 2024

Notes:

1. Development Construction Plan drawings such as: Elevations, Lighting, Civil, Engineering Plan ..., are filed in the Map Room with the City of Santa Fe Case #_____.

2. CITY OF SANTA FE DRAINAGE:
   a. SUBJECT TO THE APPROVAL OF CITY OF SANTA FE PERMIT AND DEVELOPMENT REVIEW DIVISION STAFF, STORM DRAINAGE AND EROSION/SEDIMENT CONTROL IMPROVEMENTS SHALL BE EXECUTED IN CONJUNCTION WITH THE CONSTRUCTION OF EACH SEGMENT OF ROADS AND UTILITIES. THESE IMPROVEMENTS SHALL BE COMPLETED AND INSPECTED PRIOR TO THE ISSUANCE OF BUILDING PERMITS.

   b. MAINTENANCE OF PRIVATE DRAINAGE EASEMENTS AND DRAINAGE FACILITIES IS THE RESPONSIBILITY OF THE OWNER. THE CITY OF SANTA FE IS HEREBY GRANTED THE RIGHT TO ACCESS AND INSPECT THESE EASEMENTS AND DRAINAGE FACILITIES AT THE DISCRETION OF THE CITY. THE OWNER AGREES TO INDEMNIFY AND TO HOLD HARMLESS FROM ALL DAMAGE TO PERSONS OR PROPERTY RESULTING FROM THE CITY'S REASONABLE EXERCISE TO THEIR ACCESS AND INSPECTION RIGHT.

COUNTY CLERK SEAL — KATHARINE E. CLARK — SANTA FE COUNTY

COUNTY OF SANTA FE )SS
STATE OF NEW MEXICO )

I hereby certify that this instrument 2006865 was filed for record on the 20th day of February, 2023 A.D. at 9:04 o'clock A.M. and was duly recorded in book 899, page (s) 43-45 of the records of Santa Fe County.

Witness my Hand and Seal of office
Katharine E. Clark
County Clerk, Santa Fe County, N.M.

ENGINEER'S SEAL — RONALD R. BOHANNAN — NEW MEXICO — 7868 — PROFESSIONAL ENGINEER

1-6-23

RONALD R. BOHANNAN
P.E. #7868

JURISDICTION: CITY OF SANTA FE
PROJECT NAME: MERIDIAN MEDICAL OFFICE BUILDING
DRAWING TYPE: COVER PAGE
DRAWING DATE: 1-6-23

**SHEET 1 of 3**

2023.10

# EXISTING CONDITIONS

DEVELOPMENT PLAN-SITE PLAN
MERIDIAN MEDICAL OFFICE BUILDING
4200 BECKNER ROAD CASE
#2022-5621

CITY OF SANTA FE JURISDICTION
SECTION 17, TOWNSHIP 16N, RANGE 9E

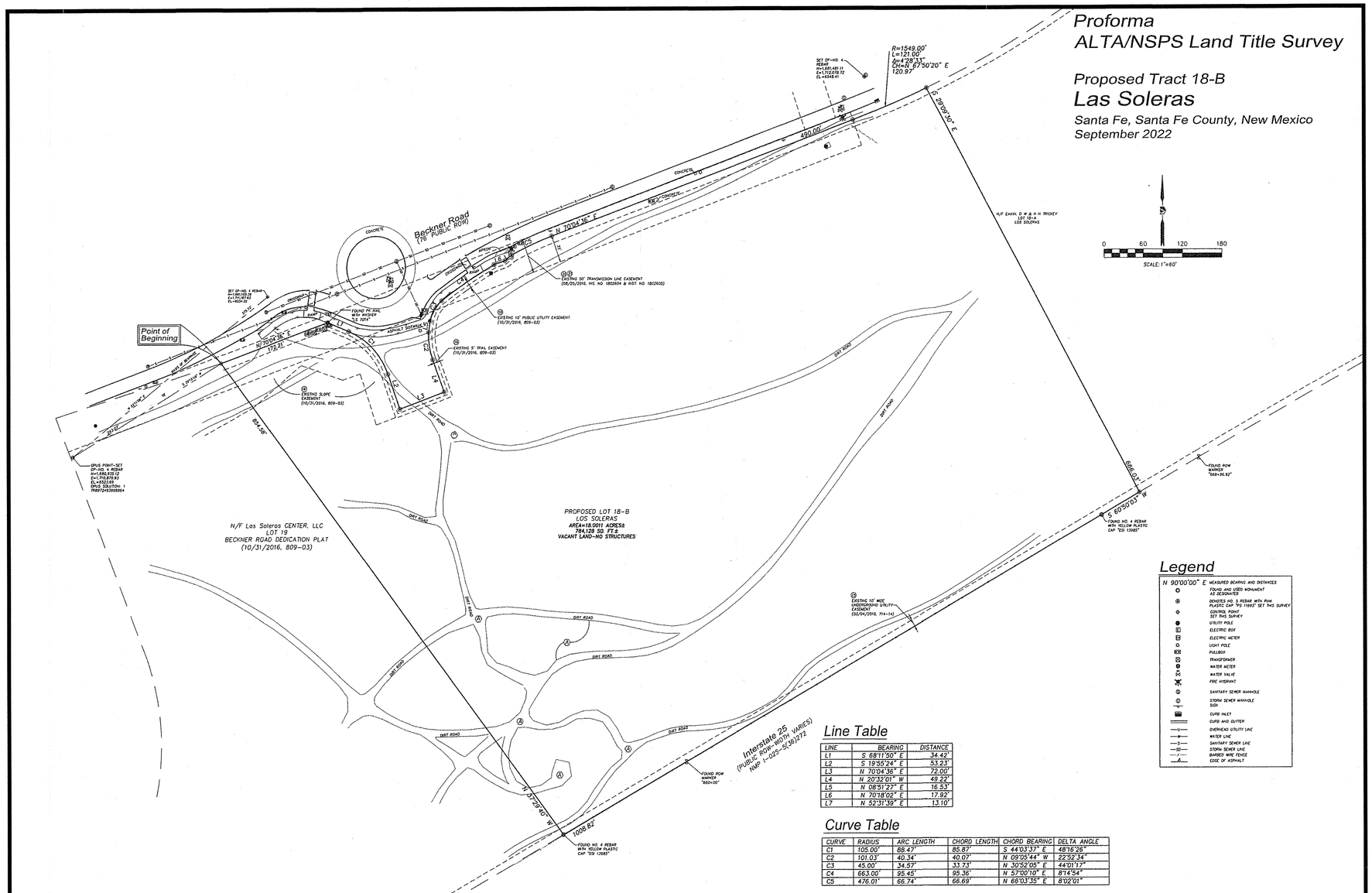


## Legend

| | |
|---|---|
| N 90°00'00" E | MEASURED BEARING AND DISTANCES |
| | FOUND AND USED MONUMENT AS DESIGNATED |
| | DENOTES NO. 5 REBAR WITH ROW PLASTIC CAP "PS 11993" SET THIS SURVEY |
| | CONTROL POINT SET THIS SURVEY |
| | UTILITY POLE |
| | ELECTRIC BOX |
| | ELECTRIC METER |
| | LIGHT POLE |
| | MAILBOX |
| | TRANSFORMER |
| | WATER METER |
| | WATER VALVE |
| | FIRE HYDRANT |
| | SANITARY SEWER MANHOLE |
| | STORM SEWER MANHOLE |
| | SIGN |
| | CURB INLET |
| | CURB AND GUTTER |
| OHP | OVERHEAD UTILITY LINE |
| W | WATER LINE |
| S | SANITARY SEWER LINE |
| SD | STORM SEWER LINE |
| BW | BARBED WIRE FENCE |
| A | EDGE OF ASPHALT |

## Line Table

| LINE | BEARING | DISTANCE |
|---|---|---|
| L1 | S 68°11'50" E | 34.42' |
| L2 | S 19°55'24" E | 53.23' |
| L3 | N 70°04'36" E | 72.00' |
| L4 | N 20°32'01" W | 49.22' |
| L5 | N 08°51'27" E | 16.53' |
| L6 | N 70°18'02" E | 17.92' |
| L7 | N 52°31'39" E | 13.10' |

## Curve Table

| CURVE | RADIUS | ARC LENGTH | CHORD LENGTH | CHORD BEARING | DELTA ANGLE |
|---|---|---|---|---|---|
| C1 | 105.00' | 88.47' | 85.87' | S 44°03'27" E | 48°16'28" |
| C2 | 101.03' | 40.34' | 40.07' | N 09°05'44" W | 22°52'34" |
| C3 | 45.00' | 34.57' | 33.73' | N 30°52'05" E | 44°01'17" |
| C4 | 663.00' | 95.45' | 95.36' | N 57°00'10" E | 8°14'54" |
| C5 | 476.01' | 66.74' | 66.69' | N 66°03'35" E | 8°02'01" |

| REVISIONS | | | |
|---|---|---|---|
| NO. | DATE | BY | DESCRIPTION |

| COORDINATE AND DIMENSION INFORMATION | | | |
|---|---|---|---|
| STATE PLANE ZONE | GRID/GROUND COORDINATES | TYPE | |
| NM-C | GRID | STANDARD | |
| HORIZONTAL DATUM | VERTICAL DATUM | ROTATION ANGLE | TEXTURED DRAWING UNITS |
| NAD83 | NAVD88 | 0° 00' 00.00" | YES |
| CAPTION: USED | | BASE POINT FOR SCALING AND/OR ROTATION | |
| OPUS SOLUTION: 1 1KB972493998964 | | N = 0 | |
| COMBINED SCALE FACTOR | DISTANCE ANNOTATION | E = 0 | |
| GRID TO GROUND: 1.00040345 | GROUND | | |
| GROUND TO GRID: 0.99959671 | BEARING ANNOTATION: DMS | ELEVATION TRANSLATION: 0.00' | ELEVATIONS VALID: YES |

| PLSS INFORMATION | | | | |
|---|---|---|---|---|
| LAND GRANT | | | | |
| N/A | | | | |
| SECTION | TOWNSHIP | RANGE | MERIDIAN | |
| 17 | 16 NORTH | 9 EAST | NMPM | |
| CITY | COUNTY | STATE | UPC | |
| SANTA FE | SANTA FE | NM | 10500943384100000000 | |

| PROPERTY INFORMATION | |
|---|---|
| PROPERTY OWNER | |
| LAS SOLERAS CENTER, LLC-38%<br>LAS SOLERAS VILLAGE, LLC-62% | |
| SUBDIVISION NAME | ADDRESS |
| LAS SOLERAS | 4000 BECKNER ROAD |

PRECISION SURVEYS, INC.
OFFICE LOCATION:
9301 San Mateo Boulevard, NE
Albuquerque, NM 87113
505.856.5700 PHONE
505.856.7900 FAX

© Copyright 2022 Precision Surveys, Inc.

| PROJECT INFORMATION | |
|---|---|
| CREW/TECH: MC/SP | DATE OF SURVEY: 05/02-03/2022 |
| DRAWN BY: JC | CHECKED BY: LM |
| PSI JOB NO.: 2282314L | SHEET NUMBER: 2 OF 2 |

# PROPERTY INFORMATION

| | |
|---|---|
| ZONING: | C-2 |
| OVERLAYS: | N/A |
| HISTORICAL STATUS: | N/A |
| LOT(S) SIZE: | 18.001 ACRES |
| EXISTING STRUCTURE SQ.FT.: | NONE |
| EXISTING UTILITIES: | NONE |
| FLOOD ZONE: | ZONE X |
| MASTER PLAN: | Las Soleras<br>*Last Amendment Recorded July 17, 2018 Instrument # 1862707, Book 836, Page 47-50D* |
| Existing Improvements: | N/A Vacant Land |

# LEGAL LOT INFORMATION

TRACT 18B LAS SOLERAS RECORDED AS PLAT BOOK 809 PAGES 3-4

ENGINEER'S SEAL

RONALD R. BOHANNAN
NEW MEXICO
7868
PROFESSIONAL ENGINEER

1-6-23

RONALD R. BOHANNAN
P.E. #7868

JURISDICTION: CITY OF SANTA FE
PROJECT NAME: MERIDIAN MEDICAL OFFICE BUILDING
DRAWING TYPE: EXISTING CONDITIONS
DRAWING DATE: 1-6-23

**SHEET 2 of 3**

2023-10

# DEVELOPMENT PLAN-SITE PLAN
# MERIDIAN MEDICAL OFFICE BUILDING
# 4200 BECKNER ROAD CASE
# #2022-5621

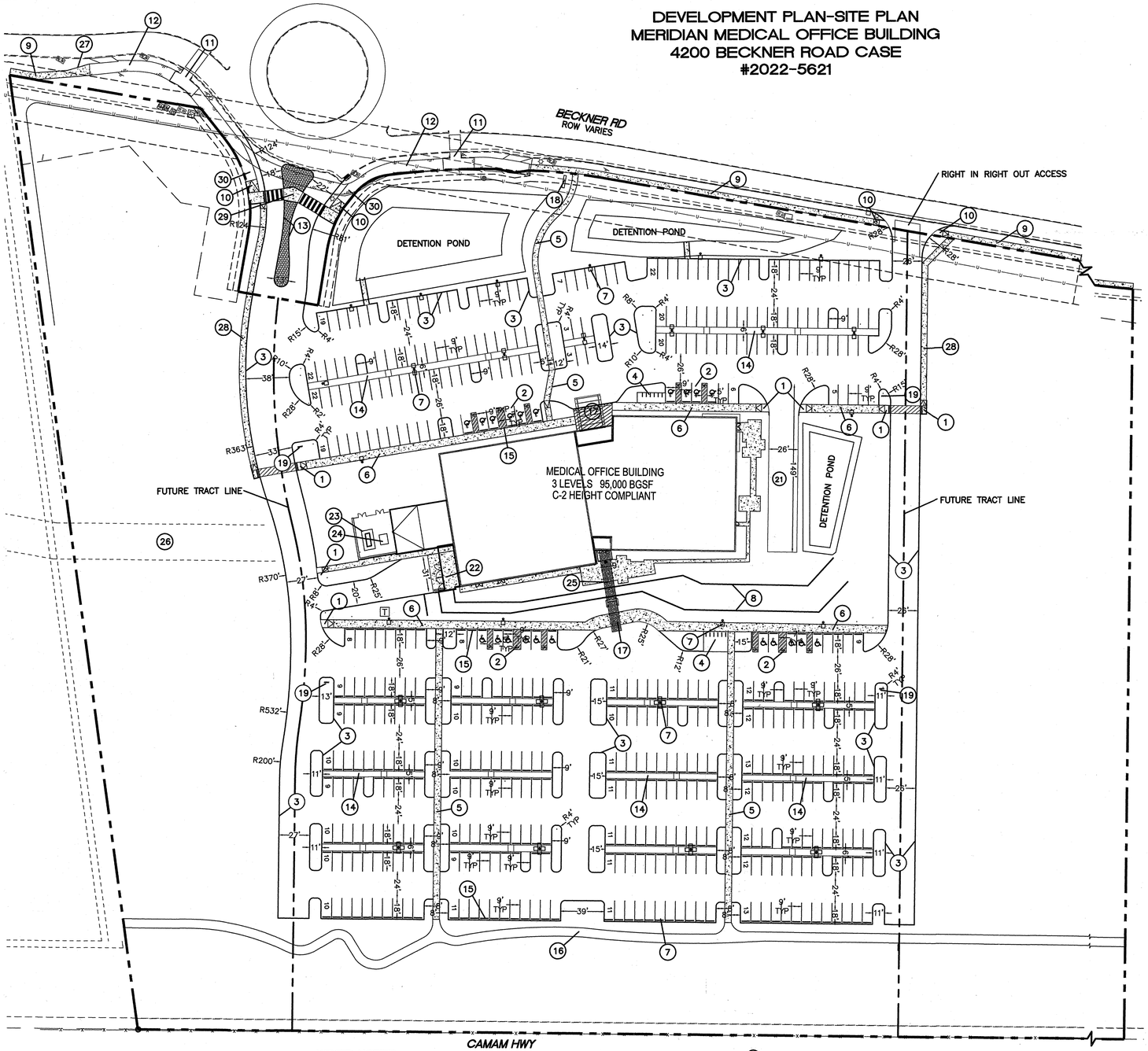


## KEYED NOTES

1. UNIDIRECTIONAL ACCESSIBLE RAMP SEE DETAIL SHEET
2. ACCESSIBLE PARKING PER ADA REQUIREMENTS
3. STANDARD CURB AND GUTTER (TYP) SEE DETAIL SHEET
4. BICYCLE RACK
5. 6' CONCRETE SIDEWALK
6. 7' CONCRETE SIDEWALK
7. SITE LIGHTING (TYP) SEE PHOTOMETRICS PLAN
   14' MOUNTING HEIGHT NORTH PARKING FIELD
   30' MOUNTING HEIGHT SOUTH PARKING FIELD
8. RETAINING WALL
9. 6' CONCRETE SIDEWALK PER NMDOT DETAIL
10. ACCESSIBLE RAMP PER NMDOT DETAIL
11. EXISTING RAMP TO REMAIN
12. EXISTING SIDEWALK TO REMAIN
13. STANDARD MEDIAN CURB SEE DETAIL SHEET
14. PLANTER (TYP) SEE LANDSCAPE PLAN FOR DETAIL
15. WHEEL STOP (TYP) SEE DETAIL SHEET
16. 8' WIDE ASPHALT TRAIL
    SEE LANDSCAPE PLAN FOR DETAIL
17. CANOPY
18. MONUMENT SIGN
19. DIRECTIONAL SIGN
20. BRICK FIRE LANE
21. ASPHALT FIRELANE (ADD ALT UPGRADE TO GRASSCRETE)
22. DUMPSTER W/RECYCLE ENCLOSURE
23. GENERATOR
24. MECHANICAL EQUIPMENT
25. 12' PEDESTRIAN WALKWAY W/CANOPY
26. FUTURE PRIVATE DRIVE, LOCATION TBD
27. 20' TRANSITION TO 6' SIDEWALK
28. 5.5' CONCRETE SIDEWALK
29. 10' WIDE CUT THRU
30. NEW ASPHALT SIDEWALK

## LEGEND

- CURB & GUTTER
- PROPOSED TRACT 18-A BOUNDARY LINE
- BUILDING
- EXISTING CURB & GUTTER
- U — EXIST OVERHEAD UTILITY LINE

### DRAINAGE FACILITIES MAINTENANCE

ALL DRAINAGE FACILITIES SHALL BE MAINTAINED BY ALL PROPERTY OWNERS. THE PROPERTY OWNERS ALSO HAVE THE RESPONSIBILITY FOR MAINTENANCE OF THE PUBLIC DRAINAGE EASEMENT. INSPECTIONS SHALL BE CONDUCTED BY A REGISTERED PROFESSIONAL ENGINEER IN THE STATE OF NEW MEXICO OR OTHER QUALIFIED PERSON. INSPECTIONS SHALL BE CONDUCTED ON THE DRAINAGE FACILITIES IN ACCORDANCE WITH THE FOLLOWING SCHEDULE: ON OR ABOUT MARCH 15, ON OR ABOUT SEPTEMBER 15, AND AFTER EACH STORM EVENT OF 1-INCH OR GREATER. MAINTENANCE OF THE DRAINAGE FACILITIES SHALL BE CONDUCTED AND DOCUMENTED BY THE ENGINEER AND THE OWNER. THE OWNER SHALL MAINTAIN A FILE OF THE INSPECTIONS AND REMEDIAL ACTION CONDUCTED ON THE DRAINAGE FACILITIES. WORK SHALL BE CONDUCTED IN ACCORDANCE WITH THE ENGINEERS' RECOMMENDATIONS, AND SHALL INCLUDE, BUT IS NOT LIMITED TO THE FOLLOWING:

A. FLUSH ALL CULVERTS, DROP INLETS AND DRAINAGE PIPES TO REMOVE SEDIMENT AND VEGETATION THAT PREVENTS OR HINDERS THE FLOW OF STORMWATER IN THE DRAINAGE STRUCTURE(S).
B. REMOVE SEDIMENT IN PONDS THAT IS GREATER THAN 6 INCHES IN DEPTH, AND IF NECESSARY, RESEED WITH NATIVE GRASSES AND INSTALL FILTER FABRIC AND 3 TO 4 INCH COBBLE AS DIRECTED BY THE ENGINEER.
C. INSPECT FOR SEDIMENTATION IN ALL SWALES, DITCHES, DRAINAGE PONDS AND REMOVE AND STABILIZE AS NECESSARY.
D. INSPECT FOR SOIL EROSION AND ALL DRAINAGE PONDS, CUT AND FILL SLOPES, AND REPAIR OR STABILIZE ACCORDINGLY.
E. INSPECT THE STRUCTURAL INTEGRITY OF DRAINAGE PONDS, SLOPES, RIP-RAP, GABIONS, DROP INLETS, CULVERTS, ENERGY DISSIPATORS, AND RETAINING WALLS, ROCK PLATING, EROSION CONTROL MATS OR BLANKETS, AND REPAIR OR STABILIZE ACCORDINGLY.

### DRAINAGE FACILITIES DESIGN NOTE

ALL STORM WATER DETENTION/RETENTION AREAS SHALL DRAIN WITHIN 24 HOURS OF A STORM EVENT AS PER ARTICLE 14-8.2 (D)(4)(C)(II)

### GENERAL NOTES

A. SOLID WASTE COLLECTION WILL BE PROVIDED BY SF SOLID WASTE COLLECTION.
B. EXTERIOR LUMINARIES SHALL COMPLY WITH CHAPTER 14-8.9 SFCC. (WALL PACKS SHALL BE SHIELDED)
C. THE SITE SHALL COMPLY WITH INTERNATIONAL FIRE CODE (IFC) 2015.
D. THE FIRE DEPARTMENT ACCESS SHALL NOT BE LESS THAN 20' AND 26' AROUND THE RESIDENTIAL BUILDING.
E. THIS SITE SHALL HAVE A WATER SUPPLY THAT MEETS FIRE FLOW AND HAVE A DISTANCE TO THE NEAREST HYDRANT TO MEET IFC REQUIREMENTS.
F. ALL FIRE DEPARTMENT ACCESS SHALL HAVE A GRADE NO GREATER THAN 10%
G. FIRE LANE SURFACE SHALL BE ALL WEATHER AND SUPPORT 75,000 POUNDS.
H. THE PROJECT IS SERVED BY A PRIVATE SANITARY SEWER COLLECTION SYSTEM.

### DUST CONTROL

ALL ON-SITE SOIL DISTRIBUTING CONSTRUCTION ACTIVITY SHALL BE ADDRESSED AND PROVIDE MEASURES TO MITIGATE OR CONTROL DUST FROM BEING TRANSPORTED OFFSITE AND POLLUTING NEIGHBORING PROPERTIES. ANY PERSON, OWNER, CONTRACTOR OR OPERATOR WHO CONDUCTS EARTH MOVING AND DUST GENERATING ACTIVITIES IS RESPONSIBLE FOR IMPLEMENTING BEST MANAGEMENT PRACTICES (BMPS) IN ORDER TO MITIGATE OFF PROPERTY TRANSPORT OF FUGITIVE DUST EMISSIONS. A PLAN, OR STORMWATER PREVENTION PLAN (SWPPP) WHEN APPLICABLE, LISTING THE BEST MANAGEMENT PRACTICES (BMPS), SHALL BE PROVIDED TO THE CITY ENGINEER, OR THEIR DESIGNEE FOR REVIEW AND APPROVAL. THE APPROVED BMPS SHALL BE APPLIED TO THE GRADED AND OR DISTURBED SOIL IN ORDER TO STABILIZE THE SITE. THE INITIAL BMP SHALL ADDRESS HOW THE CONTRACTOR WILL MINIMIZE THE AMOUNT OF DISTURBED SOIL, AND HOW THE CONTRACTOR WILL STABILIZE THE DISTURBED SERVICE AREA EXPOSED TO WIND OR VEHICLE TRAFFIC DURING CONSTRUCTION.

SEE SHEET CG-101 FOR FULL DUST CONTROL NOTES.

### GUNNISON'S PRAIRIE DOG NOTE

THIS PROJECT SHALL COMPLY WITH THE PROVISIONS OF THE GUNNISON'S PRAIRIE DOG ORDINANCE (ARTICLE 14-8. 12).

### NOTARIZED STORMWATER AGREEMENT

STORMWATER AGREEMENT: PROPERTY OWNER(S) HERE BY AGREE THAT ALL STORMWATER EASEMENTS AND ANY OTHER DRAINAGE AND STORMWATER MANAGEMENT IMPROVEMENTS ARE ON PRIVATE PROPERTY AND WILL BE MAINTAINED AND KEPT FULLY FUNCTIONAL AS ORIGINALLY DESIGNED AND CONSTRUCTED WITHIN PRIVATE PROPERTY BOUNDARIES BY THE PROPERTY OWNER AND SUBSEQUENT HEIRS, ASSIGNS, AND FUTURE OWNERS. THE CITY IS HERE BY GRANTED THE FOLLOWING: (1) ACCESS FOR INSPECTION OF SAID IMPROVEMENTS; (2) IN THE EVENT OF DRAINAGE AND STORMWATER MANAGEMENT IMPROVEMENT MAINTENANCE DEFICIENCY AND AFTER TEN (10) DAYS WRITTEN NOTICE TO THE RESPECTIVE PROPERTY OWNER, TO ENTER AND RESTORE FULL FUNCTIONAL CAPACITY OF THE DRAINAGE AND STORMWATER MANAGEMENT IMPROVEMENTS; AND (3) TO LIEN PROPERTY FOR BOTH DIRECT AND INDIRECT COSTS ASSOCIATED WITH SUCH WORK. BY SIGNATURE AFFIXED TO THIS INSTRUMENT, THE PROPERTY OWNER(S) APPROVE AND AGREE THAT THIS AGREEMENT IS BINDING PERPETUALLY, RUNNING WITH THE LAND, ON PRESENT AND FUTURE OWNERS, HEIRS, AND ASSIGNS.

_____
OWNERS PRINTED NAME

_____
OWNERS SIGNATURE

THE FOREGOING INSTRUMENT WAS ACKNOWLEDGED BEFORE ME THIS DAY OF _____, 20_____ (OR EQUAL)

_____ _____
NOTARY PUBLIC MY COMMISSION EXPIRES

### SITE DATA

PROPOSED USAGE COMMERCIAL
LOT AREA 421765 SF (9.68 ACRES)
ZONING C-2
BUILDING AREA 95000 GSF (89050 NLSF)
BUILDING COVERAGE 36%

BUILDING SETBACK
FRONT 20'
REAR 10'
SIDE 10'

PARKING REQUIRED 446 SPACES (1/200 NLSF)
PARKING PROVIDED 470 SPACES
ACCESSIBLE PARKING REQUIRED 12 SPACES (2 VAN)
ACCESSIBLE SPACES PROVIDED 21 SPACES (3 VAN)
TOTAL 491 SPACES

BICYCLE SPACES REQUIRED 12
BICYCLE SPACES PROVIDED 12

LANDSCAPE REQUIRED REFER TO PLANTING PLAN SHEET L701
LANDSCAPE PROVIDED REFER TO PLANTING PLAN SHEET L701

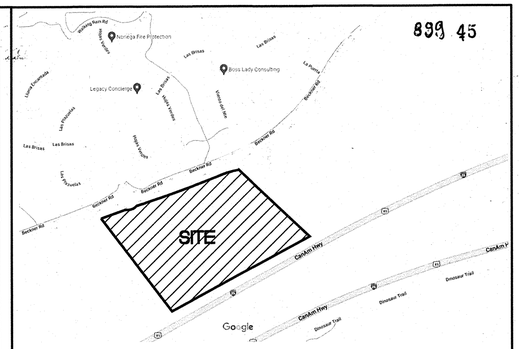
899 45
Legacy Concierge
Boss Lady Consulting
SITE
Cerrillos Rd
Camino Entrada
Las Brisas
Las Alamedas
Las Nubes
Las Trincheras
Las Veredas
Las Tiendas
Rancho Viejo
Rancho Rd
Browner Rd
Caminito Entrada
Caminito Rancho
Caminito Huerto
Caminito Hacienda
Caminito Ranchero
Caminito Hermoso
Caminito Hilo
Caminito Hoyo
Caminito Hierro
Caminito Hoja
Caminito Hilera
Caminito Hoguera
Caminito Hoz
Caminito Hilado
Caminito Hilacha

**Las Soleras, Tracts 18A & 18B (Santa Fe, NM)**
**(Beckner Road/Walking Rain Rd.)**
**Traffic Impact Study**

## Executive Summary

The purpose of this Traffic Impact Study (TIS) is to evaluate the transportation conditions before and after implementation of the proposed development of Tracts 18A & 18B of the Las Soleras Masterplanned Community to determine the impact of the project on the adjacent transportation system and recommend mitigation measures where necessary. This study is prepared in accordance with the requirements of the City of Santa Fe, Traffic Engineering Department based on the Scoping Meeting held on July 27, 2023.

The proposed Las Soleras, Tracts 18A & 18B development is located at Beckner Rd. / Walking Rain Rd. within the City of Santa Fe, New Mexico. The study area includes three existing signalized intersections, four existing unsignalized roundabout intersections, one existing unsignalized driveway (Driveway "A"), and three proposed unsignalized theoretical driveways (one is a roundabout) as listed below:

1. Beckner Road / Cerrillos Rd. (Signalized)
2. Herrera Dr. (Wellness Way) / Cerrillos Rd. (Signalized)
3. Beckner Rd. / Richards Ave. (Signalized)*
4. Beckner Rd./ Wellness Way (Unsignalized Roundabout)
5. Beckner Rd. / Las Soleras Dr. (Unsignalized Roundabout)
6. Beckner Rd./ Rail Runner Rd. (Unsignalized Roundabout)
7. Beckner Rd. / Walking Rain Rd. (Unsignalized Roundabout)
8. Beckner Rd. / Driveway "A" (Unsignalized – Right-in, Right-out only)
9. Beckner Rd. / Driveway "B" (Unsignalized – Full Access)
10. Beckner Rd. / Driveway "C" (Unsignalized – Full Access)
11. Beckner Rd. / Driveway "D" (Unsignalized – Full Access Roundabout)

* - Signal at Beckner Rd. / Richards Ave. to be constructed this year.

The Las Soleras, Tracts 18A & 18B project is to be developed as a mixed use development comprised of medical office uses, retail uses, and future undefined uses Tract 18A is part of the original project which is being required to be included but does not have defined uses.. For the purposes of this Traffic Impact Study, Tract 18A will be assumed to have residential uses (330 single-family dwelling units). Following are a general site plan for the proposed development and a trip generation rate summary table showing the calculated trip generation rate for the project. Since this is a mixed-use type of development, adjustments were made to the trip generation rate to account for internal capture trips based on methods established under NCHRP (National Cooperative Highway Research Program) 684. No adjustments were made for pass-by.

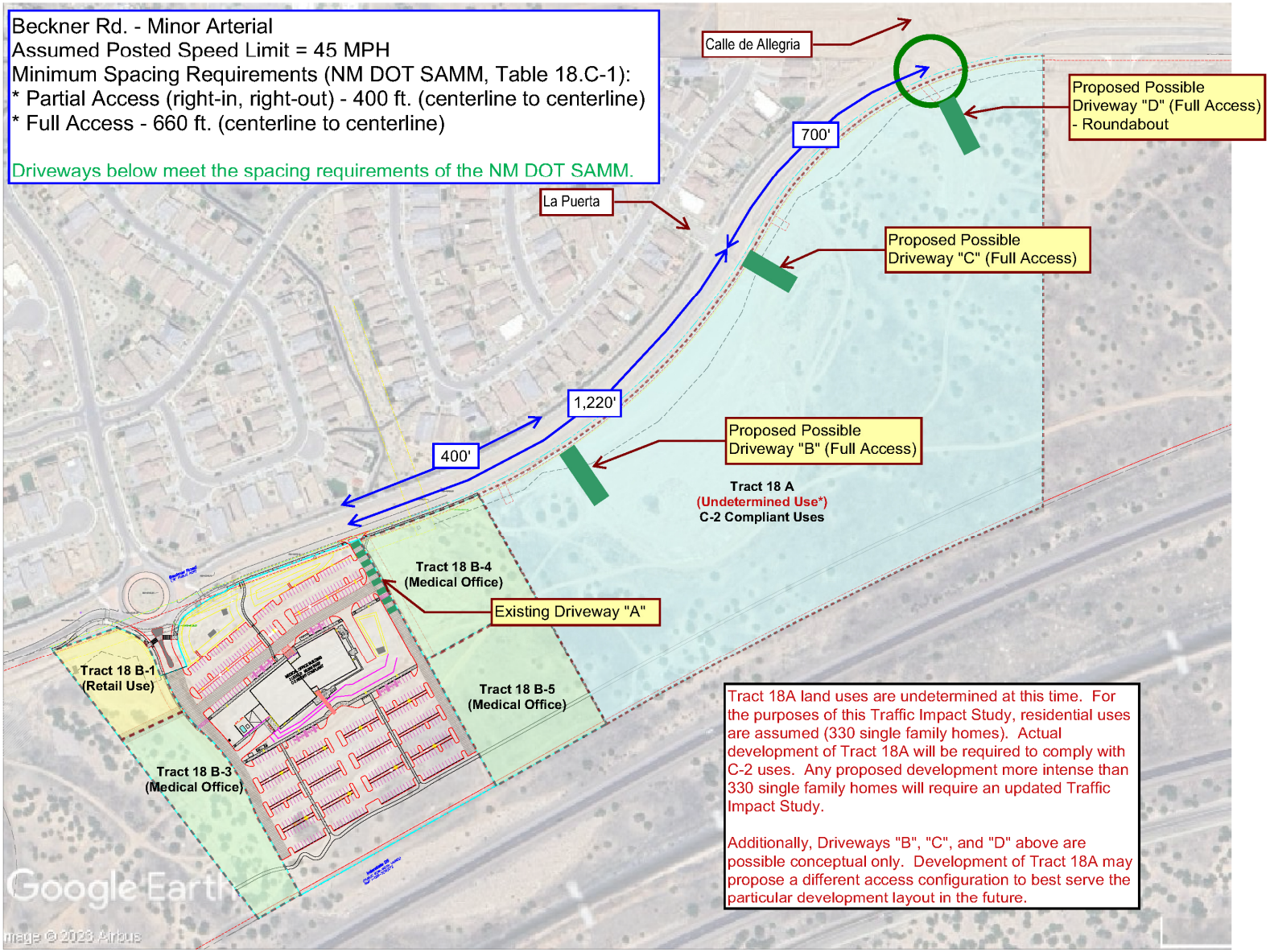
Beckner Rd. - Minor Arterial
Assumed Posted Speed Limit = 45 MPH
Minimum Spacing Requirements (NM DOT SAMM, Table 18.C-1):
* Partial Access (right-in, right-out) - 400 ft. (centerline to centerline)
* Full Access - 660 ft. (centerline to centerline)
Driveways below meet the spacing requirements of the NM DOT SAMM.
Calle de Allegria
Proposed Possible Driveway "D" (Full Access) - Roundabout
700'
La Puerta
Proposed Possible Driveway "C" (Full Access)
1,220'
400'
Proposed Possible Driveway "B" (Full Access)
Tract 18 A
(Undetermined Use*)
C-2 Compliant Uses
Tract 18 B-4
(Medical Office)
Existing Driveway "A"
Tract 18 B-1
(Retail Use)
Tract 18 B-5
(Medical Office)
Tract 18 B-3
(Medical Office)
Tract 18A land uses are undetermined at this time. For the purposes of this Traffic Impact Study, residential uses are assumed (330 single family homes). Actual development of Tract 18A will be required to comply with C-2 uses. Any proposed development more intense than 330 single family homes will require an updated Traffic Impact Study.
Additionally, Driveways "B", "C", and "D" above are possible conceptual only. Development of Tract 18A may propose a different access configuration to best serve the particular development layout in the future.
Google Earth
Image © 2023 Airbus

# *Las Soleras, Tract 18-A/B (Beckner Rd. / Walking Rain Rd.)*

## Trip Generation Data (ITE Trip Generation Manual - 11th Edition)

| | USE (ITE CODE) | | 24 HR VOL | A. M. PEAK HR. | | P. M. PEAK HR. | |
|---|---|---|---|---|---|---|---|
| *Tract No.* | *DESCRIPTION* | | *GROSS* | *ENTER* | *EXIT* | *ENTER* | *EXIT* |
| | **Summary Sheet** | Units | | | | | |
| 18 B-1 | Coffee/Donut Shop w/ Drive Thru Window (937) | 2.70 | 1,441 | 118 | 114 | 53 | 53 |
| 18 B-3 / 4 / 5 | Medical-Dental Office Building (720) | 90.00 | 3,759 | 220 | 59 | 106 | 248 |
| 18-A | Single-Family Detached Housing (210) | 330 | 3,112 | 55 | 166 | 192 | 113 |
| | **Subtotal** | | **8,312** | **393** | **339** | **351** | **414** |
| | Internal Capture Trips | | | -81 | -81 | -28 | -28 |
| | **Net New Trips Generated** | | **8,312** | **312** | **258** | **323** | **386** |

The initial phase of the Las Soleras Tracts 18B Project development is to be accessed via two existing driveways. Primary access will be via the recently constructed south leg of the existing intersection of Beckner Rd. / Walking Rain Rd. It is configured as a full access unsignalized single lane circulating roundabout intersection. The secondary access is an existing right-in, right-out driveway on the south side of Beckner Rd. approximately 470 east of Walking Rain Rd. (centerline to centerline). The two existing access points meet the minimum access spacing requirements established by the New Mexico Department of Transportation's State Access Management Manual (SAMM) which establishes the following minimum spacing requirements based on a roadway classification for Beckner Rd. as an Urban Minor Arterial Roadway with a posted speed limit of 45 MPH.:

- Partial access – 400 ft. spacing (centerline to centerline)
- Full access – 660 ft. spacing (centerline to centerline)

Tract 18A, for the purposes of this Traffic Impact Study is assumed to be developed as residential uses so as to consider trips generated by the parcel. However, the developer has no definite planned uses defined for Tract 18A at this time. Tract 18A is zoned for C-2 uses. Therefore, any development of Tract 18A in the future will be required to comply with C-2 uses. If the trip generation rate for Tract 18A ends up being significantly higher that what is assumed in this Study, then an updated Traffic Impact Study will be required at the time of development of Tract 18A based on those uses.

Tract 18A has a frontage along Beckner of approximately 1,800 feet, and existing Driveway "A" is located approximately 320 feet west of the northwest corner of Tract 18A. There should be sufficient frontage east of existing Driveway "A" to proposed three full access driveways (or intersections) along the south side of Tract 18A to serve the parcel. The proposed plan layout on the preceding page serves as a demonstration of what access could be acceptable. The east driveway (Driveway "D") on Beckner Rd. for Tract 18A would be the south leg of the newly constructed roundabout (at Calle de Alegria). The three proposed driveways (intersections) along the south side of Beckner Rd. are hypothetical and conceptual at this point in time. This Study (and the associated access plan for Tract 18B) serves as a possible access scenario for the

parcel, but is subject to change in the future depending on actual plan and uses proposed for the parcel in the future. Access for Tract 18A will be required to comply with the City of Santa Fe requirements at the time of actual development no matter what the uses might be.

Analysis of the study area for this project as defined above was performed using Synchro 11 software developed by Trafficware, Inc. a CUBIC company. Reporting in this Traffic Impact Study are the HCM6 (Highway Capacity Manual, 6th Edition) reports from Synchro 11 software. Results of the analysis of the project's transportation study area are summarized in the following table:

## Executive Summary Results Table

### Laa Soleras, Tracts 18A & 18B

| | | | 2022 Conditions | | 2025 Conditions | | 2035 Conditions | |
|---|---|---|---|---|---|---|---|---|
| Intersection No. / Name | Signalization | Case | AM Peak | PM Peak | AM Peak | PM Peak | AM Peak | PM Peak |
| 1 - Beckner Rd. / Cerrillos Rd. | Signalized | NO BUILD | C - 24.8 | B - 19.3 | D - 35.1 | C - 28.0 | D - 47.3 | C - 30.7 |
| | | NO BLD MIT* | | | C - 32.4 | C - 28.5 | D - 35.1 | C - 29.1 |
| | | BUILD | | | D - 37.3 | D - 37.1 | D - 49.6 | D - 39.7 |
| | | **BUILD MIT*** | | | **C - 33.9** | **C - 31.9** | **D - 36.8** | **C - 32.5** |
| 2 - Wellness Way / Cerrillos Rd. | Signalized | NO BUILD | C - 24.0 | D - 35.7 | C - 26.2 | D - 41.7 | C - 29.9 | D - 53.7 |
| | | NO BLD MIT** | | | C - 23.3 | C - 29.7 | C - 25.9 | D - 36.0 |
| | | BUILD | | | C - 29.1 | D - 54.2 | C - 34.5 | E - 67.6 |
| | | **BUILD MIT**** | | | **C - 25.7** | **C - 33.0** | **C - 28.6** | **D - 39.9** |
| 3 - Beckner Rd. / Richards Ave. | Signalized | NO BUILD | N/A | N/A | C - 21.6 | B - 12.1 | C - 32.2 | B - 13.0 |
| | | BUILD | | | C - 22.9 | B - 13.6 | C - 34.6 | B - 14.6 |
| 4 - Beckner Rd. / Wellness Way | Roundabout | NO BUILD | A - 3.4 | A - 3.5 | A - 5.0 | A - 4.8 | A - 5.2 | A - 5.1 |
| | | BUILD | | | A - 6.9 | A - 6.7 | A - 7.3 | A - 7.2 |
| 5 - Beckner Rd. / Las Soleras Dr. | Roundabout | NO BUILD | A - 3.2 | A - 3.2 | A - 4.2 | A - 5.1 | A - 4.3 | A - 5.3 |
| | | BUILD | | | A - 5.1 | A - 6.8 | A - 5.3 | A - 7.1 |
| 6 - Beckner Rd. / Rail Runner Rd. | Roundabout | NO BUILD | A - 4.0 | A - 3.6 | A - 6.1 | A - 5.7 | A - 6.5 | A - 6.0 |
| | | BUILD | | | A - 9.7 | A - 9.7 | B - 10.5 | B - 10.3 |
| 7 - Beckner Rd. / Walking Rain Rd. | Roundabout | NO BUILD | A - 3.5 | A - 3.6 | A - 5.8 | A - 5.9 | A - 6.0 | A - 6.3 |
| | | BUILD | | | A - 9.4 | B - 11.4 | A - 10.0 | B - 12.2 |
| 8. Beckner Rd. / Driveway "A" | Unsignalized | NO BUILD | N/A | N/A | B - 10.0 | B - 10.1 | B - 10.2 | B - 10.4 |
| | | BUILD | N/A | N/A | B - 10.3 | B - 10.1 | B - 10.5 | B - 12.1 |
| 9. Beckner Rd. / Driveway "B" | Unsignalized | NO BUILD | N/A | N/A | N/A | N/A | N/A | N/A |
| | | BUILD | N/A | N/A | B - 10.3 | B - 10.1 | B - 10.5 | B - 12.1 |
| 10. Beckner Rd. / Driveway "C" | Unsignalized | NO BUILD | N/A | N/A | N/A | N/A | N/A | N/A |
| | | BUILD | N/A | N/A | B - 10.3 | B - 10.1 | B - 10.5 | B - 12.1 |
| 10. Beckner Rd. / Driveway "D" | Roundabout | NO BUILD | N/A | N/A | N/A | N/A | N/A | N/A |
| | | BUILD | N/A | N/A | A - 6.9 | A - 6.7 | A - 7.3 | A - 7.2 |

* - Mitigation for Beckner Rd. / Cerrillos Rd. proposed in 5407 Beckner Rd. TIS (by Santa Fe Engineering) consisted of constructing dual westbound left turn lanes on Beckner at Cerrillos Rd. Mitigation for Beckner Rd. / Cerrillos Rd. proposed in Cavan Development TIS (by BHI) consisted of constructing dual eastbound left turn lanes on Beckner Rd. extension (I-25 Frntg. Rd.) at Cerrillos Rd. 5407 Beckner Rd. TIS stated that right turn overlap phases were assumed for all right turns with exclusive right turn lanes.

** - Mitiagation for Beckner Rd. / Herrera Rd. (Wellness Way) proposed in 5407 Beckner Rd. TIS (by Santa Fe Engineering) consists of constructing right turn overlap phase for the eastbound right turn movement on Herrera Rd. (Wellness Way) at Cerrillos Rd.

Proposed mitigation measures for the intersections of Beckner Rd. / Cerrillos Rd. and Herrera Dr. (Wellness Way) / Cerrillos Rd. have not yet been constructed. It is assumed that the developer of the Cavan Project will be financially responsible for the construction of the dual eastbound left turn lanes on Beckner Rd. extension (I-25 Frntg. Rd.) at Cerrillos Rd. Also, is it assumed that the developer of 5407 Beckner Rd. will be financially responsible for the construction of the dual westbound left turn lanes on Beckner Rd. at Cerrillos Rd. as well as the westbound to northbound right turn overalp phase at Beckner Rd. / Cerrillos Rd. Additionally, it is assumed that the developer of 5407 Beckner Rd. will be financially responsible for the eastbound right turn overlap phase implementation at Herrera Dr. (Wellness Way) at Cerrillos Rd. Since those improvements have not yet been implemented, then this Study evaluated the two signalized intersection under both scenarios. That is, the existing, NO BUILD, and BUILD conditions for the two signalized intersections were evaluated based on existing geometry and signal conditions, and again based on the mitigated conditions (by others).

Levels-of-service and delay for signalized and unsignalized intersections were determined based on criteria established by the Highway Capacity Manual (6th Edition). The average control delay is calculated for each intersection and for each lane group of each leg of the intersection. Generally speaking, the calculated control delay determines the Level-of-Service for each lane group. The control delay generally determines the level-of-service based on the following tables:

**LEVEL-OF-SERVICE CRITERIA FOR SIGNALIZED INTERSECTIONS**

| Average Delay (secs) | Level-of-Service |
|---|---|
| ≤ 10 | A |
| > 10 and ≤ 20 | B |
| > 20 and ≤ 35 | C |
| > 35 and ≤ 55 | D |
| > 55 and ≤ 80 | E |
| > 80 | F |

**LEVEL-OF-SERVICE CRITERIA FOR UNSIGNALIZED INTERSECTIONS**

| Average Delay (secs) | Level-of-Service |
|---|---|
| ≤ 10 | A |
| > 10 and ≤ 15 | B |
| > 15 and ≤ 25 | C |
| > 25 and ≤ 35 | D |
| > 35 and ≤ 50 | E |
| > 50 | F |

Generally speaking, a Level-of-Service D or better is an acceptable parameter for design purposes.

In summary, the proposed Las Soleras, Tracts 18A & 18B will have minimal adverse impact to the adjacent transportation system. Level of service (LOS) at the intersections in the study area meet or exceed the City of Santa Fe's minimum acceptable Level of Service Standards for the 2025 implementation year and 2035 horizon year for all intersections in the study area. The operation of the adjacent transportation system is sufficient to serve the new Las Soleras, Tracts 18A & 18B Project and it will not be necessary to construct the bridge over the Arroyo Chamiso to connect Las Soleras Dr. between Beckner Rd. and Cerrillos Rd. at this time. It is still the plan for the master developer of Las Soleras Masterplanned Development to construct the bridge in the future when needed. Those plans have been started at this time.

Also, it is assumed in this Study that other roadway system improvements will be constructed by others (as per recommendations in each respective Traffic Impact Study) as outlined as follows:

1) Dual eastbound left turn lanes will be constructed on the extension of Beckner Rd. (I-25 Frntg. Rd.) at Cerrillos Rd. by the Developer of the Cavan Project.
2) Dual westbound left turn lanes will be constructed on Beckner Rd. at Cerrillos Rd. by the developer of the 5407 Beckner Rd. Development and westbound right turn overlap phasing installed at the traffic signal.
3) Eastbound and westbound right turn overlap phasing will be installed at the traffic signal at Herrera Dr. (Wellness Way) / Cerrillos Rd. by the developer of the 5407 Beckner Rd. Development.

Determination of Warrants for Deceleration Lanes were performed for Driveway "A" to determine if a right turn deceleration lane would be warranted. The forecast volumes at Driveway "A" demonstrated that an eastbound right turn deceleration lane on Beckner Rd. at Driveway "A" is warranted. The eastbound right turn deceleration lane should be designed and constructed to a length of 370 feet including transition.

Driveways "B", "C", and "D" are future conceptual theoretical driveways that are not to be constructed until such time and the nature and land uses for Tract 18A are determined. Based on the conceptual theoretical access concept, Driveways "B" and "C" are fully expected to warrant both right turn and left turn deceleration lanes. The development should plan for those in the project budget. The right turn deceleration lanes should be designed and constructed to a length of 370 feet including transition. The left turn deceleration lanes should be designed and constructed to a length of 400 feet including transition. Proposed conceptual theoretical Driveway "D" is a roundabout which should not require right or left turn deceleration lanes.

Based on the analysis provided in this Traffic Impact Study, following are the recommendations for improvements to the adjacent transportation system in the study area for this project:

- **Beckner Rd.** / **Cerrillos Rd.** (signalized) – no recommendations. Dual eastbound left turn lanes and dual westbound left turn lanes and a westbound right turn overlap phase is to be constructed by others.

- **Herrera Dr. (Wellness Way)** / **Cerrillos Rd.** (signalized) – no recommendations. However, eastbound to southbound right turn overlap phasing is to be constructed by others.
- **Beckner Rd.** / **Richards Ave.** (signalized) – no recommendations.
- **Beckner Rd.** / **Wellness Way** (unsignalized roundabout) – no recommendations.
- **Beckner Rd.** / **Las Soleras Dr.** (unsignalized roundabout) no recommendations**.**
- **Beckner Rd.** / **Rail Runner Rd.** (unsignalized roundabout) – no recommendations.
- **Beckner Rd.** / **Walking Rain Rd.** (unsignalized roundabout) – no recommendations.
- **Beckner Rd.** / **Driveway "A"** (unsignalized right-in, right-out driveway) – an eastbound right turn deceleration lane on Beckner Rd. at Driveway "A" is warranted. The eastbound right turn deceleration lane should be designed and constructed to a length of 370 feet including transition.
- **Beckner Rd.** / **Driveway "B"** (unsignalized full access) – both a right turn deceleration lane and a left turn deceleration lane are warranted on Beckner Rd. at Driveway "B". The right turn deceleration lane should be designed and constructed to a length of 370 feet including transition. The left turn deceleration lane should be designed and constructed to a length of 400 feet including transition.
- **Beckner Rd.** / **Driveway "C"** (unsignalized full access) – both a right turn deceleration lane and a left turn deceleration lane are warranted on Beckner Rd. at Driveway "C". The right turn deceleration lane should be designed and constructed to a length of 370 feet including transition. The left turn deceleration lane should be designed and constructed to a length of 400 feet including transition.
- **Beckner Rd.** / **Driveway "D"** (unsignalized full access roundabout) – Driveway "D should be the south leg of the new roundabout on Beckner Rd. at Calle de Alegria. As a roundabout, the warrants for right and left turn deceleration lanes do not apply. Lane geometry shall depend on future HCS analysis.

# *APPENDIX*

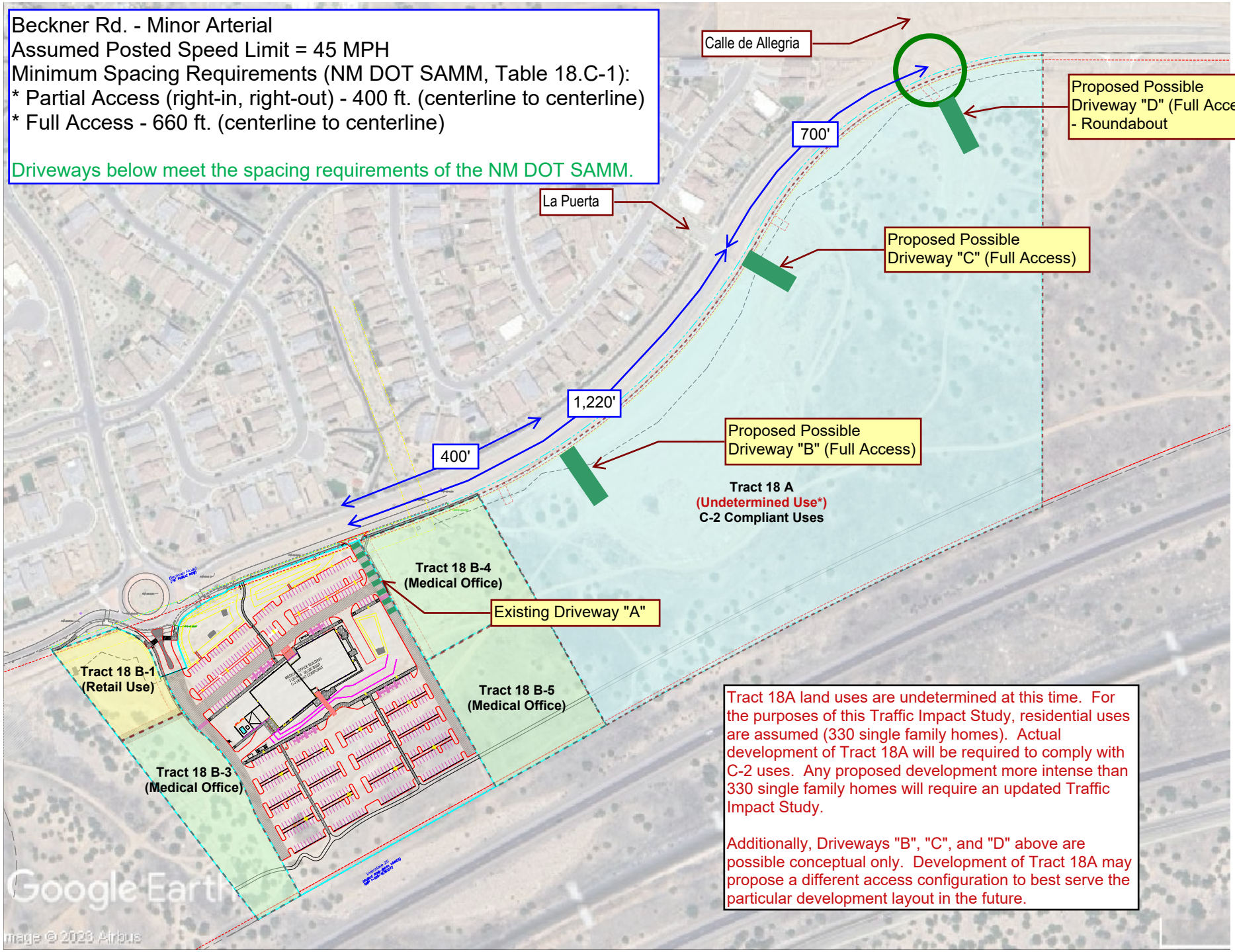
Beckner Rd. - Minor Arterial
Assumed Posted Speed Limit = 45 MPH
Minimum Spacing Requirements (NM DOT SAMM, Table 18.C-1):
* Partial Access (right-in, right-out) - 400 ft. (centerline to centerline)
* Full Access - 660 ft. (centerline to centerline)
Driveways below meet the spacing requirements of the NM DOT SAMM.
Calle de Allegria
Proposed Possible Driveway "D" (Full Access) - Roundabout
700'
La Puerta
Proposed Possible Driveway "C" (Full Access)
1,220'
400'
Proposed Possible Driveway "B" (Full Access)
Tract 18 A
(Undetermined Use*)
C-2 Compliant Uses
Tract 18 B-4
(Medical Office)
Existing Driveway "A"
Tract 18 B-1
(Retail Use)
Tract 18 B-5
(Medical Office)
Tract 18 B-3
(Medical Office)
Google Earth
Image © 2023 Airbus
Tract 18A land uses are undetermined at this time. For the purposes of this Traffic Impact Study, residential uses are assumed (330 single family homes). Actual development of Tract 18A will be required to comply with C-2 uses. Any proposed development more intense than 330 single family homes will require an updated Traffic Impact Study.
Additionally, Driveways "B", "C", and "D" above are possible conceptual only. Development of Tract 18A may propose a different access configuration to best serve the particular development layout in the future.

TIERRA WEST

# Las Soleras, Tracts 18A & 18B

(Beckner Rd. / Walking Rain Rd.)

## Traffic Impact Study

January 8, 2024

D R A F T




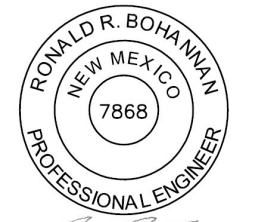


**Presented to:**
Leroy Pacheco, P.E.
City of Santa Fe, NM
&
Phil Gallegos, P.E.
City of Santa Fe, NM

Terry O. Brown, P.E.
5571 Midway Park Pl. NE
Albuquerque, NM 87109
(505) 883-8807

Ronald R. Bohannan, P.E.
5571 Midway Park Pl. NE
Albuquerque, NM 87109
(505) 883-8807

**Las Soleras, Tracts 18A & 18B (Santa Fe, NM)**
**(Beckner Road/Walking Rain Rd.)**
**Traffic Impact Study**

## Executive Summary

The purpose of this Traffic Impact Study (TIS) is to evaluate the transportation conditions before and after implementation of the proposed development of Tracts 18A & 18B of the Las Soleras Masterplanned Community to determine the impact of the project on the adjacent transportation system and recommend mitigation measures where necessary. This study is prepared in accordance with the requirements of the City of Santa Fe, Traffic Engineering Department based on the Scoping Meeting held on July 27, 2023.

The proposed Las Soleras, Tracts 18A & 18B development is located at Beckner Rd. / Walking Rain Rd. within the City of Santa Fe, New Mexico. The study area includes three existing signalized intersections, four existing unsignalized roundabout intersections, one existing unsignalized driveway (Driveway "A"), and three proposed unsignalized theoretical driveways (one is a roundabout) as listed below:

1. Beckner Road / Cerrillos Rd. (Signalized)
2. Herrera Dr. (Wellness Way) / Cerrillos Rd. (Signalized)
3. Beckner Rd. / Richards Ave. (Signalized)*
4. Beckner Rd./ Wellness Way (Unsignalized Roundabout)
5. Beckner Rd. / Las Soleras Dr. (Unsignalized Roundabout)
6. Beckner Rd./ Rail Runner Rd. (Unsignalized Roundabout)
7. Beckner Rd. / Walking Rain Rd. (Unsignalized Roundabout)
8. Beckner Rd. / Driveway "A" (Unsignalized – Right-in, Right-out only)
9. Beckner Rd. / Driveway "B" (Unsignalized – Full Access)
10. Beckner Rd. / Driveway "C" (Unsignalized – Full Access)
11. Beckner Rd. / Driveway "D" (Unsignalized – Full Access Roundabout)

* - Signal at Beckner Rd. / Richards Ave. to be constructed this year.

The Las Soleras, Tracts 18A & 18B project is to be developed as a mixed use development comprised of medical office uses, retail uses, and future undefined uses Tract 18A is part of the original project which is being required to be included but does not have defined uses.. For the purposes of this Traffic Impact Study, Tract 18A will be assumed to have residential uses (330 single-family dwelling units). Following are a general site plan for the proposed development and a trip generation rate summary table showing the calculated trip generation rate for the project. Since this is a mixed-use type of development, adjustments were made to the trip generation rate to account for internal capture trips based on methods established under NCHRP (National Cooperative Highway Research Program) 684. No adjustments were made for pass-by.

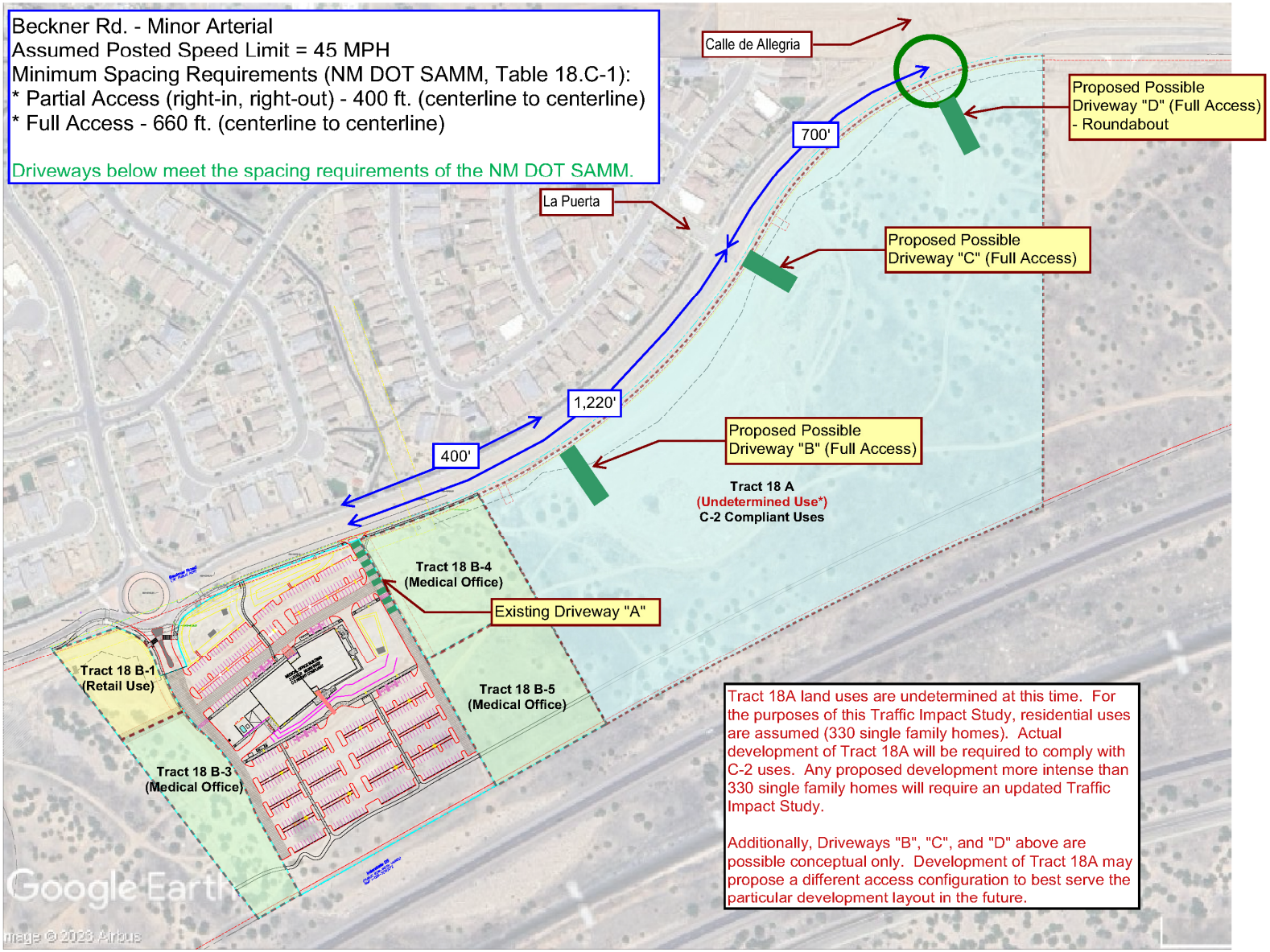
Beckner Rd. - Minor Arterial
Assumed Posted Speed Limit = 45 MPH
Minimum Spacing Requirements (NM DOT SAMM, Table 18.C-1):
* Partial Access (right-in, right-out) - 400 ft. (centerline to centerline)
* Full Access - 660 ft. (centerline to centerline)
Driveways below meet the spacing requirements of the NM DOT SAMM.
Calle de Allegria
Proposed Possible Driveway "D" (Full Access) - Roundabout
700'
La Puerta
Proposed Possible Driveway "C" (Full Access)
1,220'
400'
Proposed Possible Driveway "B" (Full Access)
Tract 18 A
(Undetermined Use*)
C-2 Compliant Uses
Tract 18 B-4
(Medical Office)
Existing Driveway "A"
Tract 18 B-1
(Retail Use)
Tract 18 B-5
(Medical Office)
Tract 18 B-3
(Medical Office)
Tract 18A land uses are undetermined at this time. For the purposes of this Traffic Impact Study, residential uses are assumed (330 single family homes). Actual development of Tract 18A will be required to comply with C-2 uses. Any proposed development more intense than 330 single family homes will require an updated Traffic Impact Study.
Additionally, Driveways "B", "C", and "D" above are possible conceptual only. Development of Tract 18A may propose a different access configuration to best serve the particular development layout in the future.
Google Earth
Image © 2023 Airbus

# *Las Soleras, Tract 18-A/B (Beckner Rd. / Walking Rain Rd.)*

## Trip Generation Data (ITE Trip Generation Manual - 11th Edition)

| | USE (ITE CODE) | | 24 HR VOL | A. M. PEAK HR. | | P. M. PEAK HR. | |
|---|---|---|---|---|---|---|---|
| *Tract No.* | *DESCRIPTION* | | *GROSS* | *ENTER* | *EXIT* | *ENTER* | *EXIT* |
| | **Summary Sheet** | Units | | | | | |
| 18 B-1 | Coffee/Donut Shop w/ Drive Thru Window (937) | 2.70 | 1,441 | 118 | 114 | 53 | 53 |
| 18 B-3 / 4 / 5 | Medical-Dental Office Building (720) | 90.00 | 3,759 | 220 | 59 | 106 | 248 |
| 18-A | Single-Family Detached Housing (210) | 330 | 3,112 | 55 | 166 | 192 | 113 |
| | **Subtotal** | | **8,312** | **393** | **339** | **351** | **414** |
| | Internal Capture Trips | | | -81 | -81 | -28 | -28 |
| | **Net New Trips Generated** | | **8,312** | **312** | **258** | **323** | **386** |

The initial phase of the Las Soleras Tracts 18B Project development is to be accessed via two existing driveways. Primary access will be via the recently constructed south leg of the existing intersection of Beckner Rd. / Walking Rain Rd. It is configured as a full access unsignalized single lane circulating roundabout intersection. The secondary access is an existing right-in, right-out driveway on the south side of Beckner Rd. approximately 470 east of Walking Rain Rd. (centerline to centerline). The two existing access points meet the minimum access spacing requirements established by the New Mexico Department of Transportation's State Access Management Manual (SAMM) which establishes the following minimum spacing requirements based on a roadway classification for Beckner Rd. as an Urban Minor Arterial Roadway with a posted speed limit of 45 MPH.:

- Partial access – 400 ft. spacing (centerline to centerline)
- Full access – 660 ft. spacing (centerline to centerline)

Tract 18A, for the purposes of this Traffic Impact Study is assumed to be developed as residential uses so as to consider trips generated by the parcel. However, the developer has no definite planned uses defined for Tract 18A at this time. Tract 18A is zoned for C-2 uses. Therefore, any development of Tract 18A in the future will be required to comply with C-2 uses. If the trip generation rate for Tract 18A ends up being significantly higher that what is assumed in this Study, then an updated Traffic Impact Study will be required at the time of development of Tract 18A based on those uses.

Tract 18A has a frontage along Beckner of approximately 1,800 feet, and existing Driveway "A" is located approximately 320 feet west of the northwest corner of Tract 18A. There should be sufficient frontage east of existing Driveway "A" to proposed three full access driveways (or intersections) along the south side of Tract 18A to serve the parcel. The proposed plan layout on the preceding page serves as a demonstration of what access could be acceptable. The east driveway (Driveway "D") on Beckner Rd. for Tract 18A would be the south leg of the newly constructed roundabout (at Calle de Alegria). The three proposed driveways (intersections) along the south side of Beckner Rd. are hypothetical and conceptual at this point in time. This Study (and the associated access plan for Tract 18B) serves as a possible access scenario for the

parcel, but is subject to change in the future depending on actual plan and uses proposed for the parcel in the future. Access for Tract 18A will be required to comply with the City of Santa Fe requirements at the time of actual development no matter what the uses might be.

Analysis of the study area for this project as defined above was performed using Synchro 11 software developed by Trafficware, Inc. a CUBIC company. Reporting in this Traffic Impact Study are the HCM6 (Highway Capacity Manual, 6th Edition) reports from Synchro 11 software. Results of the analysis of the project's transportation study area are summarized in the following table:

## Executive Summary Results Table

### Laa Soleras, Tracts 18A & 18B

| | | | 2022 Conditions | | 2025 Conditions | | 2035 Conditions | |
|---|---|---|---|---|---|---|---|---|
| Intersection No. / Name | Signalization | Case | AM Peak | PM Peak | AM Peak | PM Peak | AM Peak | PM Peak |
| 1 - Beckner Rd. / Cerrillos Rd. | Signalized | NO BUILD | C - 24.8 | B - 19.3 | D - 35.1 | C - 28.0 | D - 47.3 | C - 30.7 |
| | | NO BLD MIT* | | | C - 32.4 | C - 28.5 | D - 35.1 | C - 29.1 |
| | | BUILD | | | D - 37.3 | D - 37.1 | D - 49.6 | D - 39.7 |
| | | **BUILD MIT*** | | | **C - 33.9** | **C - 31.9** | **D - 36.8** | **C - 32.5** |
| 2 - Wellness Way / Cerrillos Rd. | Signalized | NO BUILD | C - 24.0 | D - 35.7 | C - 26.2 | D - 41.7 | C - 29.9 | D - 53.7 |
| | | NO BLD MIT** | | | C - 23.3 | C - 29.7 | C - 25.9 | D - 36.0 |
| | | BUILD | | | C - 29.1 | D - 54.2 | C - 34.5 | E - 67.6 |
| | | **BUILD MIT**** | | | **C - 25.7** | **C - 33.0** | **C - 28.6** | **D - 39.9** |
| 3 - Beckner Rd. / Richards Ave. | Signalized | NO BUILD | N/A | N/A | C - 21.6 | B - 12.1 | C - 32.2 | B - 13.0 |
| | | BUILD | | | C - 22.9 | B - 13.6 | C - 34.6 | B - 14.6 |
| 4 - Beckner Rd. / Wellness Way | Roundabout | NO BUILD | A - 3.4 | A - 3.5 | A - 5.0 | A - 4.8 | A - 5.2 | A - 5.1 |
| | | BUILD | | | A - 6.9 | A - 6.7 | A - 7.3 | A - 7.2 |
| 5 - Beckner Rd. / Las Soleras Dr. | Roundabout | NO BUILD | A - 3.2 | A - 3.2 | A - 4.2 | A - 5.1 | A - 4.3 | A - 5.3 |
| | | BUILD | | | A - 5.1 | A - 6.8 | A - 5.3 | A - 7.1 |
| 6 - Beckner Rd. / Rail Runner Rd. | Roundabout | NO BUILD | A - 4.0 | A - 3.6 | A - 6.1 | A - 5.7 | A - 6.5 | A - 6.0 |
| | | BUILD | | | A - 9.7 | A - 9.7 | B - 10.5 | B - 10.3 |
| 7 - Beckner Rd. / Walking Rain Rd. | Roundabout | NO BUILD | A - 3.5 | A - 3.6 | A - 5.8 | A - 5.9 | A - 6.0 | A - 6.3 |
| | | BUILD | | | A - 9.4 | B - 11.4 | A - 10.0 | B - 12.2 |
| 8. Beckner Rd. / Driveway "A" | Unsignalized | NO BUILD | N/A | N/A | B - 10.0 | B - 10.1 | B - 10.2 | B - 10.4 |
| | | BUILD | N/A | N/A | B - 10.3 | B - 10.1 | B - 10.5 | B - 12.1 |
| 9. Beckner Rd. / Driveway "B" | Unsignalized | NO BUILD | N/A | N/A | N/A | N/A | N/A | N/A |
| | | BUILD | N/A | N/A | B - 10.3 | B - 10.1 | B - 10.5 | B - 12.1 |
| 10. Beckner Rd. / Driveway "C" | Unsignalized | NO BUILD | N/A | N/A | N/A | N/A | N/A | N/A |
| | | BUILD | N/A | N/A | B - 10.3 | B - 10.1 | B - 10.5 | B - 12.1 |
| 10. Beckner Rd. / Driveway "D" | Roundabout | NO BUILD | N/A | N/A | N/A | N/A | N/A | N/A |
| | | BUILD | N/A | N/A | A - 6.9 | A - 6.7 | A - 7.3 | A - 7.2 |

* - Mitigation for Beckner Rd. / Cerrillos Rd. proposed in 5407 Beckner Rd. TIS (by Santa Fe Engineering) consisted of constructing dual westbound left turn lanes on Beckner at Cerrillos Rd. Mitigation for Beckner Rd. / Cerrillos Rd. proposed in Cavan Development TIS (by BHI) consisted of constructing dual eastbound left turn lanes on Beckner Rd. extension (I-25 Frntg. Rd.) at Cerrillos Rd. 5407 Beckner Rd. TIS stated that right turn overlap phases were assumed for all right turns with exclusive right turn lanes.

** - Mitiagation for Beckner Rd. / Herrera Rd. (Wellness Way) proposed in 5407 Beckner Rd. TIS (by Santa Fe Engineering) consists of constructing right turn overlap phase for the eastbound right turn movement on Herrera Rd. (Wellness Way) at Cerrillos Rd.

Proposed mitigation measures for the intersections of Beckner Rd. / Cerrillos Rd. and Herrera Dr. (Wellness Way) / Cerrillos Rd. have not yet been constructed. It is assumed that the developer of the Cavan Project will be financially responsible for the construction of the dual eastbound left turn lanes on Beckner Rd. extension (I-25 Frntg. Rd.) at Cerrillos Rd. Also, is it assumed that the developer of 5407 Beckner Rd. will be financially responsible for the construction of the dual westbound left turn lanes on Beckner Rd. at Cerrillos Rd. as well as the westbound to northbound right turn overalp phase at Beckner Rd. / Cerrillos Rd. Additionally, it is assumed that the developer of 5407 Beckner Rd. will be financially responsible for the eastbound right turn overlap phase implementation at Herrera Dr. (Wellness Way) at Cerrillos Rd. Since those improvements have not yet been implemented, then this Study evaluated the two signalized intersection under both scenarios. That is, the existing, NO BUILD, and BUILD conditions for the two signalized intersections were evaluated based on existing geometry and signal conditions, and again based on the mitigated conditions (by others).

Levels-of-service and delay for signalized and unsignalized intersections were determined based on criteria established by the Highway Capacity Manual (6th Edition). The average control delay is calculated for each intersection and for each lane group of each leg of the intersection. Generally speaking, the calculated control delay determines the Level-of-Service for each lane group. The control delay generally determines the level-of-service based on the following tables:

**LEVEL-OF-SERVICE CRITERIA FOR SIGNALIZED INTERSECTIONS**

| Average Delay (secs) | Level-of-Service |
|---|---|
| ≤ 10 | A |
| > 10 and ≤ 20 | B |
| > 20 and ≤ 35 | C |
| > 35 and ≤ 55 | D |
| > 55 and ≤ 80 | E |
| > 80 | F |

**LEVEL-OF-SERVICE CRITERIA FOR UNSIGNALIZED INTERSECTIONS**

| Average Delay (secs) | Level-of-Service |
|---|---|
| ≤ 10 | A |
| > 10 and ≤ 15 | B |
| > 15 and ≤ 25 | C |
| > 25 and ≤ 35 | D |
| > 35 and ≤ 50 | E |
| > 50 | F |

Generally speaking, a Level-of-Service D or better is an acceptable parameter for design purposes.

In summary, the proposed Las Soleras, Tracts 18A & 18B will have minimal adverse impact to the adjacent transportation system. Level of service (LOS) at the intersections in the study area meet or exceed the City of Santa Fe's minimum acceptable Level of Service Standards for the 2025 implementation year and 2035 horizon year for all intersections in the study area. The operation of the adjacent transportation system is sufficient to serve the new Las Soleras, Tracts 18A & 18B Project and it will not be necessary to construct the bridge over the Arroyo Chamiso to connect Las Soleras Dr. between Beckner Rd. and Cerrillos Rd. at this time. It is still the plan for the master developer of Las Soleras Masterplanned Development to construct the bridge in the future when needed. Those plans have been started at this time.

Also, it is assumed in this Study that other roadway system improvements will be constructed by others (as per recommendations in each respective Traffic Impact Study) as outlined as follows:

1) Dual eastbound left turn lanes will be constructed on the extension of Beckner Rd. (I-25 Frntg. Rd.) at Cerrillos Rd. by the Developer of the Cavan Project.
2) Dual westbound left turn lanes will be constructed on Beckner Rd. at Cerrillos Rd. by the developer of the 5407 Beckner Rd. Development and westbound right turn overlap phasing installed at the traffic signal.
3) Eastbound and westbound right turn overlap phasing will be installed at the traffic signal at Herrera Dr. (Wellness Way) / Cerrillos Rd. by the developer of the 5407 Beckner Rd. Development.

Determination of Warrants for Deceleration Lanes were performed for Driveway "A" to determine if a right turn deceleration lane would be warranted. The forecast volumes at Driveway "A" demonstrated that an eastbound right turn deceleration lane on Beckner Rd. at Driveway "A" is warranted. The eastbound right turn deceleration lane should be designed and constructed to a length of 370 feet including transition.

Driveways "B", "C", and "D" are future conceptual theoretical driveways that are not to be constructed until such time and the nature and land uses for Tract 18A are determined. Based on the conceptual theoretical access concept, Driveways "B" and "C" are fully expected to warrant both right turn and left turn deceleration lanes. The development should plan for those in the project budget. The right turn deceleration lanes should be designed and constructed to a length of 370 feet including transition. The left turn deceleration lanes should be designed and constructed to a length of 400 feet including transition. Proposed conceptual theoretical Driveway "D" is a roundabout which should not require right or left turn deceleration lanes.

Based on the analysis provided in this Traffic Impact Study, following are the recommendations for improvements to the adjacent transportation system in the study area for this project:

- **Beckner Rd.** / **Cerrillos Rd.** (signalized) – no recommendations. Dual eastbound left turn lanes and dual westbound left turn lanes and a westbound right turn overlap phase is to be constructed by others.

- **Herrera Dr. (Wellness Way)** / **Cerrillos Rd.** (signalized) – no recommendations. However, eastbound to southbound right turn overlap phasing is to be constructed by others.
- **Beckner Rd.** / **Richards Ave.** (signalized) – no recommendations.
- **Beckner Rd.** / **Wellness Way** (unsignalized roundabout) – no recommendations.
- **Beckner Rd.** / **Las Soleras Dr.** (unsignalized roundabout) no recommendations**.**
- **Beckner Rd.** / **Rail Runner Rd.** (unsignalized roundabout) – no recommendations.
- **Beckner Rd.** / **Walking Rain Rd.** (unsignalized roundabout) – no recommendations.
- **Beckner Rd.** / **Driveway "A"** (unsignalized right-in, right-out driveway) – an eastbound right turn deceleration lane on Beckner Rd. at Driveway "A" is warranted. The eastbound right turn deceleration lane should be designed and constructed to a length of 370 feet including transition.
- **Beckner Rd.** / **Driveway "B"** (unsignalized full access) – both a right turn deceleration lane and a left turn deceleration lane are warranted on Beckner Rd. at Driveway "B". The right turn deceleration lane should be designed and constructed to a length of 370 feet including transition. The left turn deceleration lane should be designed and constructed to a length of 400 feet including transition.
- **Beckner Rd.** / **Driveway "C"** (unsignalized full access) – both a right turn deceleration lane and a left turn deceleration lane are warranted on Beckner Rd. at Driveway "C". The right turn deceleration lane should be designed and constructed to a length of 370 feet including transition. The left turn deceleration lane should be designed and constructed to a length of 400 feet including transition.
- **Beckner Rd.** / **Driveway "D"** (unsignalized full access roundabout) – Driveway "D should be the south leg of the new roundabout on Beckner Rd. at Calle de Alegria. As a roundabout, the warrants for right and left turn deceleration lanes do not apply. Lane geometry shall depend on future HCS analysis.

**Las Soleras, Tracts 18A & 18B (Santa Fe, NM)**
**(Beckner Road/Walking Rain Rd.)**
**Traffic Impact Study** Contents


Executive Summary ..... i

Introduction ..... 1

Description of Proposed Development ..... 1

Study Area Conditions ..... 4

Analysis of Existing Conditions ..... 5

Analysis of Implementation Year and Horizon Year Conditions ..... 5

Traffic Projections ..... 5

Traffic Analysis ..... 6

*Impact Assessment* ..... 40

*Access Design Specifications* ..... 40

*Summary of Deficiencies, Anticipated Impacts, and Recommendations* ..... 41

*APPENDIX* ..... 45

**Las Soleras, Tracts 18A & 18B (Santa Fe, NM)**
**(Beckner Road/Walking Rain Rd.)**
**Traffic Impact Study**

## Introduction

The purpose of this Traffic Impact Study (TIS) is to evaluate the transportation conditions before and after implementation of the proposed Las Soleras Tracts 18A & 18B to determine the impact of the project on the adjacent transportation system and recommend mitigation measures where necessary. This study is prepared in accordance with the requirements of the City of Santa Fe, Traffic Engineering Department.

## Description of Proposed Development

The proposed Las Soleras Tracts 18A & 18B Project is located within the City of Santa Fe, New Mexico, 1.4 miles east of the intersection of Cerrillos Road and Beckner Road at Walking Rain Rd. Following is a vicinity map showing the project location. (Also see Vicinity Map Appendix Page A-1):

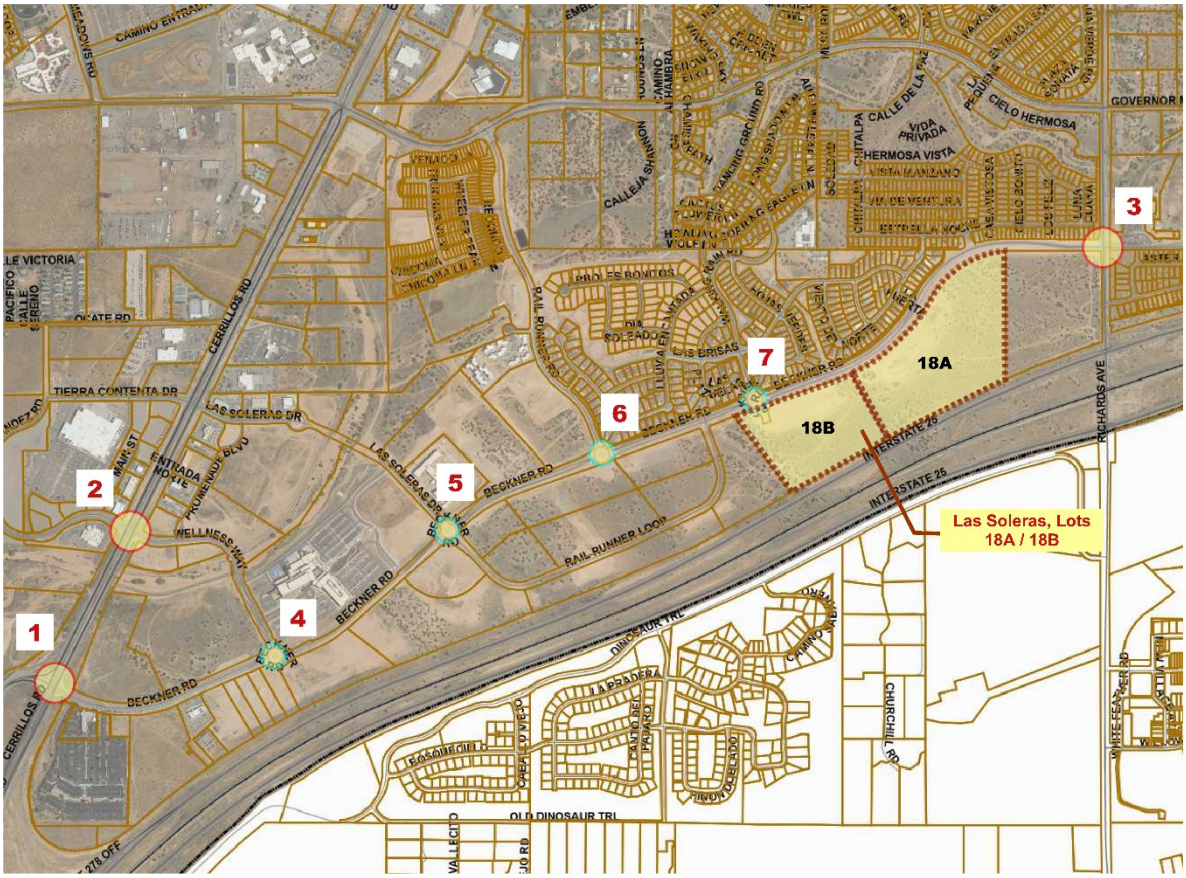

The study area includes three existing signalized intersections and three existing unsignalized roundabout intersections:

1. Beckner Road / Cerrillos Rd. (Signalized)
2. Herrera Dr. (Wellness Way) / Cerrillos Rd. (Signalized)
3. Beckner Rd. / Richards Ave. (Signalized)
4. Beckner Rd./ Wellness Way (Unsignalized Roundabout)
5. Beckner Rd. / Las Soleras Dr. (Unsignalized Roundabout)
6. Beckner Rd./ Rail Runner Rd. (Unsignalized Roundabout)
7. Beckner Rd. / Walking Rain Rd. (Unsignalized Roundabout)
8. Beckner Rd. / Driveway "A" (Unsignalized – Right-in, right-out)
9. Beckner Rd. / Driveway "B" (Unsignalized - Full Access)
10. Beckner Rd. / Driveway "C" - (Unsignalized – Full Access)
11. Beckner Rd. / Driveway "D" (Calle de Alegria) – Full Access Roundabout

The Las Soleras Tracts 18A & 18B is to be developed as a mulit-use development comprised of medical office uses (Tract 18 B-3, Tract 18 B-4, and Tract 18 B-5) some retail floor space (Tract 18 B-1 with a Coffee / Donut Shop with Drive-Through Window), and unknow uses for Tract 18A. Institute of Traffic Engineers' (ITE) Trip Generation Manual (11$^{TH}$ Edition) defined Medical Office (ITE Land Use 720) as follows:

- **Medical-Dental Office Building (720)** – A medical dental office building is a facility that provides diagnoses and outpatient care on a routine basis but is unable to provide in-house medical and surgical care. One or more private physicians or dentists generally operate this type of facility.
- **(Coffee / Donut Shop with Drive-Through Window (937)** – This land use includes any coffee and donut restaurant that has a drive-through windows as well as a walk-in entrance area at which a patron can purchase and consume items. The restaurant sells freshly brewed coffee (along with coffee-related accessories) and a variety of food/drink products such as donuts, bagels, breads, muffins, cakes, sandwiches, wraps, salads, and other hot and cold beverages. The restaurant marketing and sales may emphasize coffee beverages over food (or vice versa).
- **Single Family Detached Housing (210)** – A single-family detached housing site includes any single-family detached home on an individual lot. A typical site surveyed is a suburban subdivision.

The developer is fairly certain that a coffee / donut shop will be constructed on Tracts 18 B-1, and that medical office uses will be constructed on Tracts 18 B-3, 18 B-4, and 18 B-5. The land uses that will be on Tract 18 A is unknown at this time. However, to provide a basic trip generation rate for Tract 18 A, it is assumed that it will be developed as single-family residential homes with 330 dwelling units. This assumption will provide a general tool for planning purposes. If Tract

18A develops in a manner that it generates substantially more traffic than what was assumed in this Study, an update will be required to reflect that actual uses to be implemented.

Following is the trip generation rate table utilized for this Study:

## *Las Soleras, Tract 18-A/B (Beckner Rd. / Walking Rain Rd.)*

### Trip Generation Data (ITE Trip Generation Manual - 11th Edition)

| | USE (ITE CODE) | | 24 HR VOL | A. M. PEAK HR. | | P. M. PEAK HR. | |
|---|---|---|---|---|---|---|---|
| *Tract No.* | *DESCRIPTION* | | *GROSS* | *ENTER* | *EXIT* | *ENTER* | *EXIT* |
| | **Summary Sheet** | Units | | | | | |
| 18 B-1 | Coffee/Donut Shop w/ Drive Thru Window (937) | 2.70 | 1,441 | 118 | 114 | 53 | 53 |
| 18 B-3 / 4 / 5 | Medical-Dental Office Building (720) | 90.00 | 3,759 | 220 | 59 | 106 | 248 |
| 18-A | Single-Family Detached Housing (210) | 330 | 3,112 | 55 | 166 | 192 | 113 |
| | **Subtotal** | | **8,312** | **393** | **339** | **351** | **414** |
| | Internal Capture Trips | | | -81 | -81 | -28 | -28 |
| | **Net New Trips Generated** | | **8,312** | **312** | **258** | **323** | **386** |

The retail component (coffee / donut shop) of this project will be accessed via the roundabout at Beckner Rd. / Walking Rain Rd. (south leg). Similarly, the medical office component of this project (Tracts 18 B-3, 18 B-4,and 18 B-5) will be accessed via either the roundabout at Beckner Rd. / Walking Rain Rd. (south leg) and / or Driveway "A" (the right-in, right-out driveway approximately 550 feet east of Walking Rain Rd. (centerline to centerline). Tract 18A will have its own access in the form of three full access driveways located along the south side of Beckner Rd. to meet the minimum spacing requirements of the New Mexico Department of Transportation's State Access Management Manual (Table 18.C-1). See general site plan above and also on Page A-3 in the Appendix of this report.

Tract 18A has a frontage along Beckner of approximately 1,800 feet, and existing Driveway "A" is located approximately 320 feet west of the northwest corner of Tract 18A. There should be sufficient frontage east of existing Driveway "A" to proposed three full access driveways (or intersections) along the south side of Tract 18A to serve the parcel. The proposed plan layout on the preceding page serves as a demonstration of what access could be acceptable. The east driveway (Driveway "D") on Beckner Rd. for Tract 18A would be the south leg of the newly constructed roundabout (at Calle de Alegria). The three proposed driveways (intersections) along the south side of Beckner Rd. are hypothetical and conceptual at this point in time. This Study (and the associated access plan for Tract 18B) serves as a possible access scenario for the parcel, but is subject to change in the future depending on actual plan and uses proposed for the parcel in the future. Access for Tract 18A will be required to comply with the City of Santa Fe requirements at the time of actual development no matter what the uses might be. At present, the City of Santa Fe is enforcing Table 18.C-1 of the New Mexico Department of Transportation's State Access Management Manual.

## Study Area Conditions

A Traffic Impact Study Scoping Meeting was held on July 27, 2023 online. Attending the meeting on behalf of the City of Santa Fe were Leroy Pacheco and Phil Gallegos. Also attending were Ron Bohannan, Amanda Herrera, and Terry Brown with Tierra West, LLC representing the developer. At the Scoping Meeting, it was determined that the study area for the TIS would include the intersections listed in the section above. The characteristics of the study area used in the analysis are as follows:

- Los Soleras Drive is incomplete and is not anticipated to be completed until at least three to five years from now. It does, however, connect to Beckner Rd as a paved two-lane roadway to the south of the Arroyo Chamiso.
- There are eight other know developments that need to be added into the background traffic volumes in this study. They are:
    1) Medical Office Building – Meridian
    2) Vista de la Sierra Subdivision
    3) Cielo Apartments
    4) Village at Las Soleras
    5) Cavan Development
    6) 5201 Beckner Rd. Development
    7) 5407 Beckner Rd. Development
    8) Havenly Santa Fe Development

  A map showing the locations of those other developments is on Page A-4 in the Appendix of this Report.
- There are two bus stops (Route 26) on Beckner Rd. and one bus stop on Las Soleras Dr however there are no bus stops within about 1,000-feet of the project.
- There are existing and planned pedestrian facilities in the project area – sidewalks, trails, or paths.
- There are a bike lanes/shoulders along Cerrillos Road, Beckner Road, and Wellness Way.
- Cerrillos Road is classified as an Urban Principal Arterial Roadway on the NMDOT Regional Roadway Functional Class Map. It is generally a six-lane roadway with a raised divided median, curb and gutter and a posted speed limit of 45-mph.
- Beckner Road is a four-lane urban minor arterial west of Las Soleras Dr with a raised divided median, curb and gutter and a 45-mph speed limit. It currently narrows to a two-lane roadway with raised medians at las Soleras Dr.
- Wellness Way and Las Soleras Drive are two-lane urban collectors with raised divided medians, curb and gutter and posted speed limits of 35-mph.
- Rail Runner Rd. is proposed to be a two-lane local road with curb and gutter, but nor median.. No speed limit is currently posted.
- Walking Rain Rd. is a two-lane local road with curb and gutter, but no median.
- All existing intersections have lighting.

Level of Service (LOS) at each intersection in the study area must meet the Minimum Acceptable Level of Service Standards as defined by the New Mexico Department of Transportation in Table 15.C-1 shown below:

**Table 15.C-1**
**Minimum Acceptable Level of Service Standards**

| Facility Type [1] | Access Categories (see Sub-Section 10.D) | | | | | | | |
|---|---|---|---|---|---|---|---|---|
| | UINT | UPA | UMA | UCOL | RINT | RPA | RMA | RCOL |
| Freeway Sections | D | - | - | - | C | - | - | - |
| Ramp Junctions | D | - [2] | - [2] | - [2] | C | - [2] | - [2] | - [2] |
| Weaving Areas | D | - [2] | - [2] | - [2] | C | - [2] | - [2] | - [2] |
| Multi-lane Highways | - | D | D | C | - | C | C | B |
| Two-Lane Highways | - | D | D | C | - | C | C | B |
| Signalized Intersections | - | D | D | D | - | C | C | C |
| Unsignalized Intersections | - | D | D | D | - | D | D | C |

*Notes: 1. The Facility Types are per the Highway Capacity Manual.*
*2. Evaluate safety and operational concerns using the best available technique.*

Based on the above table, intersections in the study area should be level D or better.

## Analysis of Existing Conditions

Base traffic volumes (turning movement counts) were collected at the intersections targeted for analysis in this study in 2022 or 2023 (while school was still in session) and are included on Appendix Pages A-203 thru A-209. Analysis results table in the following section include 2022 AM and PM Peak Hour analysis results for intersections in the study area as well as forecast 2025 and 2035 AM and PM Peak Hour analysis results.

## Analysis of Implementation Year and Horizon Year Conditions

### Traffic Projections

Background traffic volumes were calculated by applying the annual background traffic growth rate to the recently collected existing traffic volumes. The annual background growth rate for the implementation year and horizon year was calculated by analyzing the AADT volumes from the Transportation Data Management System maintained by the New Mexico Department of Transportation. The AADT data for the past ten years on Cerrillos Rd. shows a minimal growth rate trend. The calculated growth rate was less than 1.0% per year historically. However, the City of Santa Fe mandated a minimum annual growth rate of 2.0% since that is what has been

utilized for other recent Traffic Impact Studies in the area. Additionally, trips from recently proposal / approved projects were added to the background traffic volumes to account for those developments. Thus, the effective annual growth rate in this Study is significantly greater than 2.0%.

Projected trips were calculated based on the Institute of Traffic Engineers (ITE) Trip Generation Manual (11th Edition). The number of trips generated by the facility during the AM and PM peak hours have been approximated using ITE Land Use 937 (Coffee / Donut Shop w/Drive Thru Window) for Tract 18 B-1, ITE Land Use 720 (Medical / Dental Office Building) for Tract 18 B-3, 18 B-4, and 18 B-5, and ITE Land Use 210 (Single-Family Detached Homes) for Tract 18A. See Page 2 and Appendix Pages A-9 through A-12 for the trip generation rate worksheets.

The trips were distributed based on Santa Fe Metropolitan Transportation Organization's (MPO's) socioeconomic data. Retail commercial (i.e., coffee shop) trips for this development were distributed based on population distribution data within a two-mile radius of the project. Medical Offices trips for this development were distributed based on population distribution regionally (citywide) inversely proportional to the distance of the population subarea from the project. Trips for residential development were distributed area-wide proportion to the employment distribution inversely proportional to the distance of the subarea from the project. The Trip Distribution maps and Trip Assignments Maps can be found in the Appendix on Pages A-27 through A-35.

**The 2025 and 2035 AM and PM Peak Hour Demand, NO BUILD, and BUILD traffic volumes** were calculated by applying a calculated peak hour factor to the peak hour traffic volumes collected in 15-minute intervals. NO BUILD volumes were generated by adjusting the demand volumes with the background traffic growth and adding trips generated by the seven other developments that are active in the study area. BUILD volumes were calculated by increasing the NO BUIID volumes by the trips generated by the project. The projected turning movement worksheets are provided in Appendix Pages A-36 thru A-85.

## Traffic Analysis

A capacity analysis was conducted for the following NO BUILD and BUILD conditions:

1. Implementation Year, 2025
2. Horizon Year, 2035

Synchro 11 (Build 11.1.3.32) by Trafficware was used for the signalized intersections, roundabouts, and unsignalized intersections. The Lanes / Volume Analysis Maps (Implementation Year and Horizon Year) for the signalized intersections and unsignalized driveways are below.

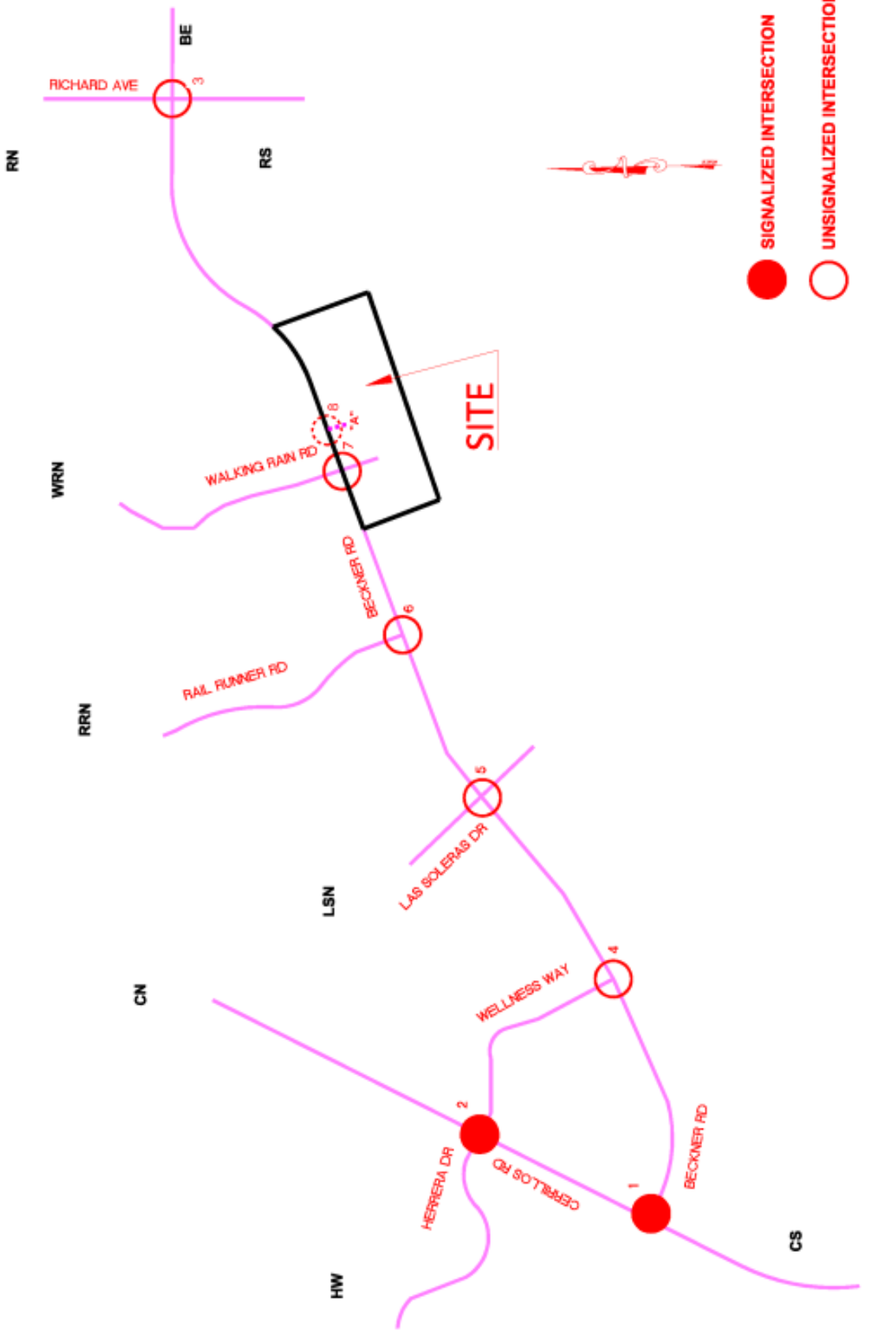


## 2022 Existing Conditions

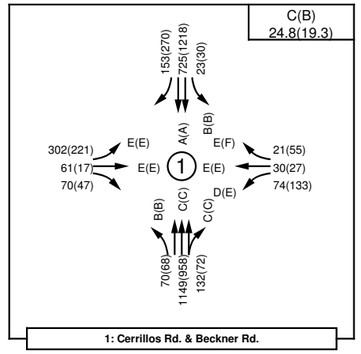


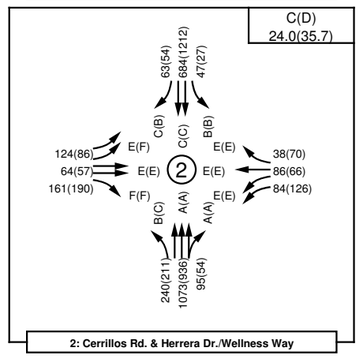


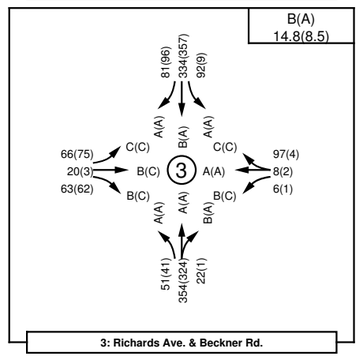


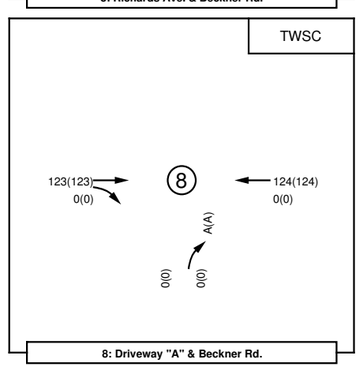


## 2025 NO BUILD Conditions [Existing Geometry]

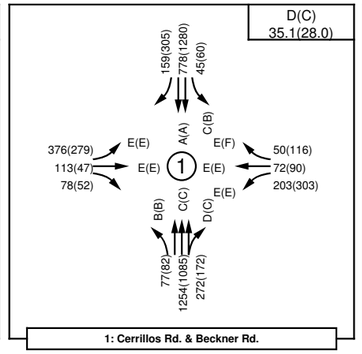


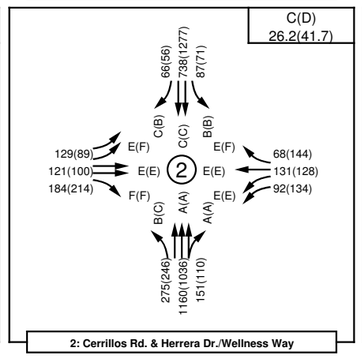


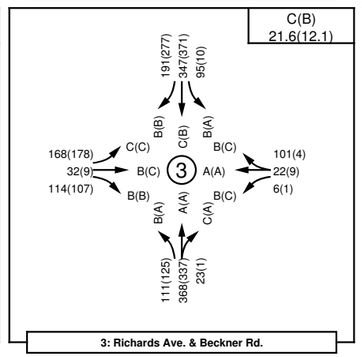


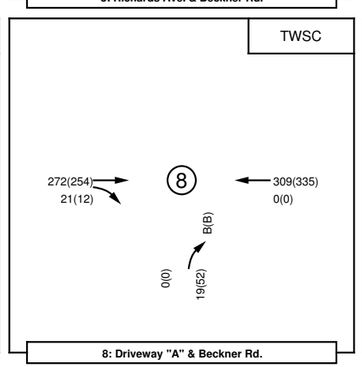


## 2025 BUILD Conditions [Existing Geometry]

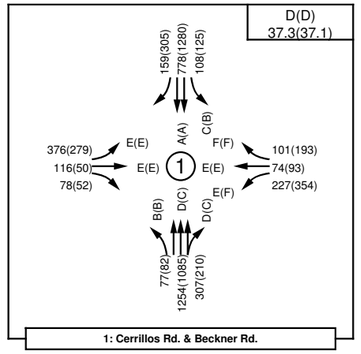


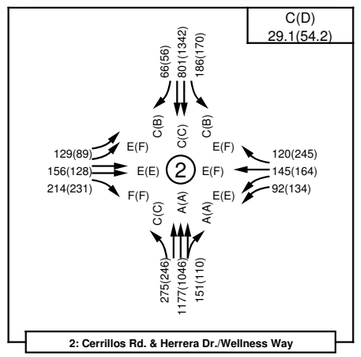


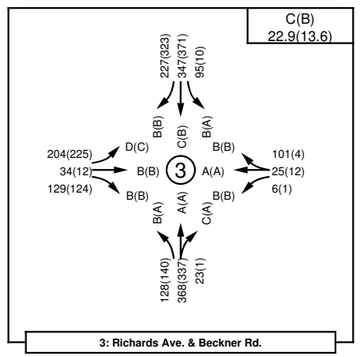


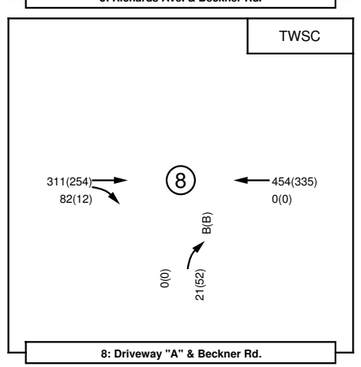


# *Las Soleras, Tracts 18A & 18B*

[Beckner Rd. / Walking Rain Rd.]

LOS / Volume Analysis Map

AM(PM)

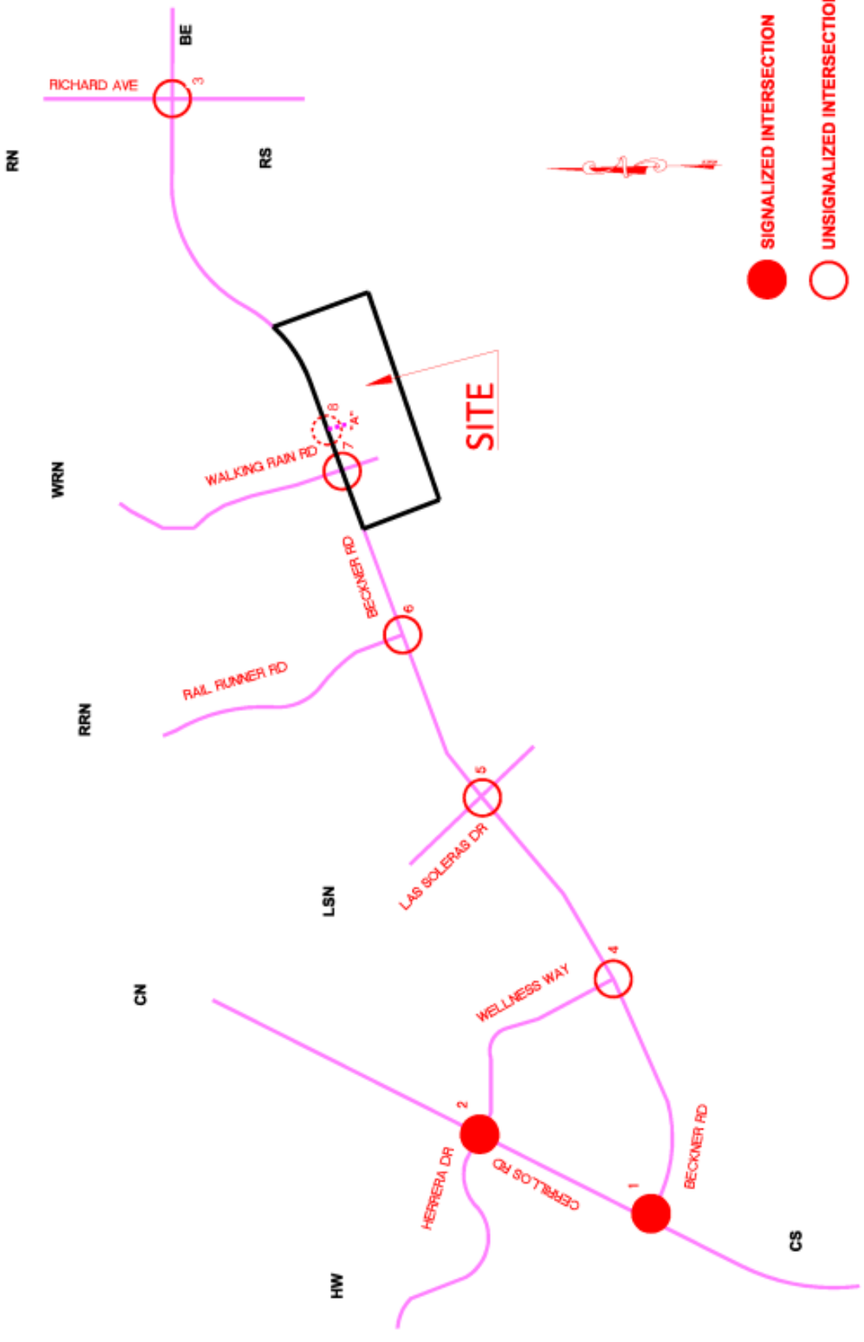


**2025 NO BUILD Conditions**
**{MITIGATED - by others]**

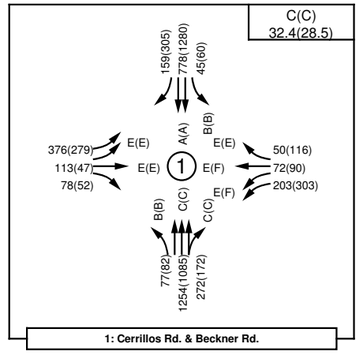


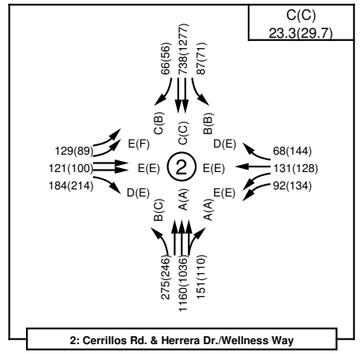


**2025 BUILD Conditions**
**[MITIGATED - by others]**

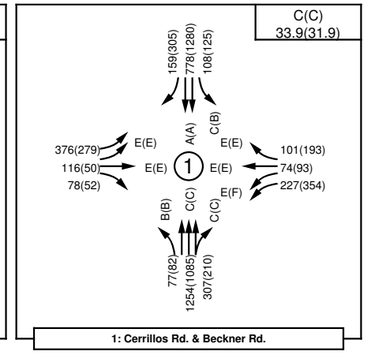


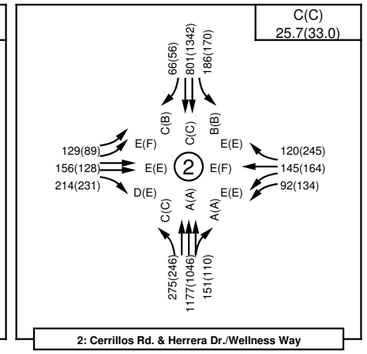


**NO RECOMMENDATIONS**

**NO RECOMMENDATIONS**

***Las Soleras, Tracts 18A & 18B***
(Beckner Rd. / Walking Rain Rd.)
LOS / Volume Analysis Map

**AM(PM)**

# Las Soleras, Tracts 18A & 18B
## (Beckner Rd. / Walking Rain Rd.)
## LOS / Volume Analysis Map

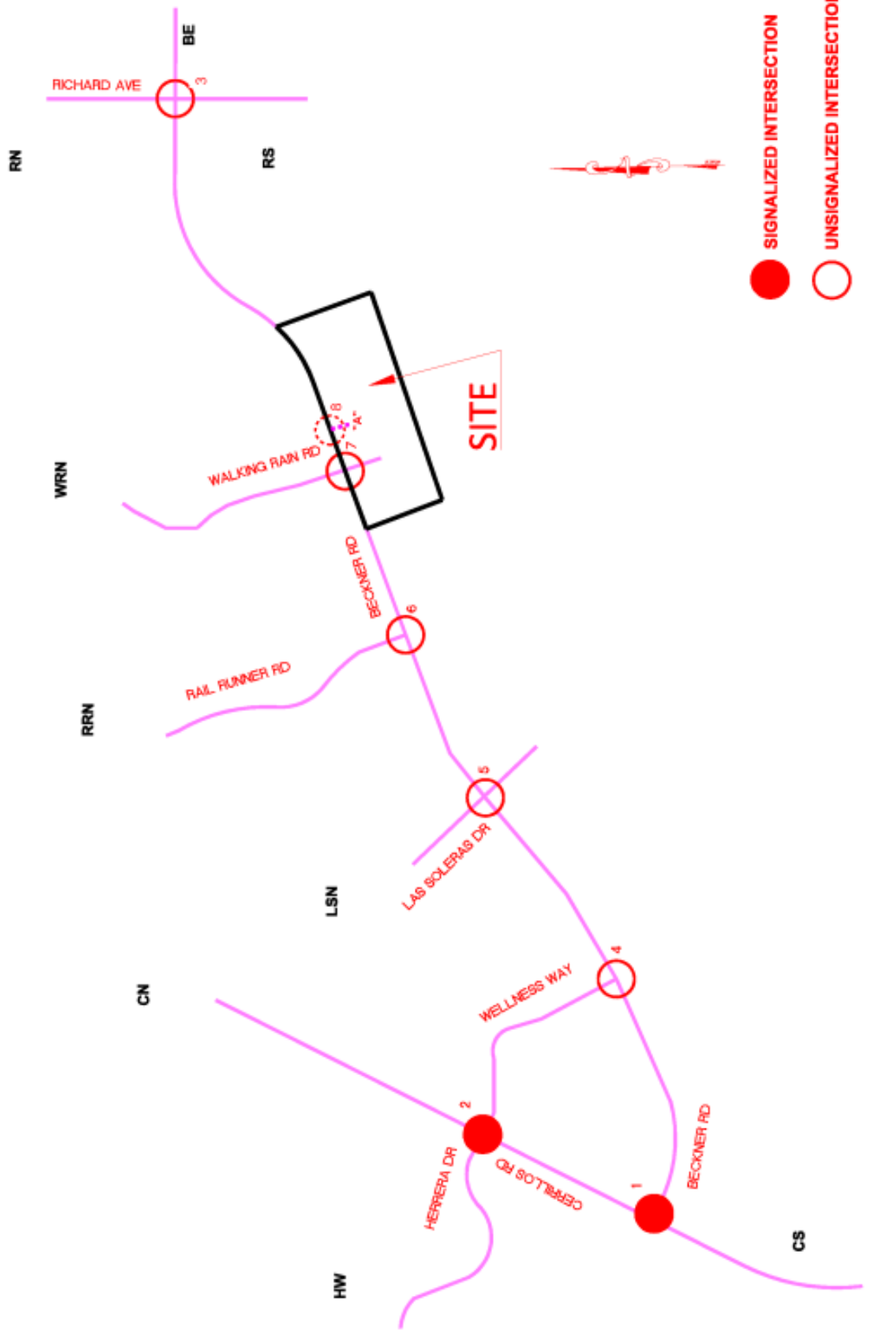


| 2022 Existing Conditions | 2025 NO BUILD Conditions [Existing Geometry] | |
|---|---|---|
| 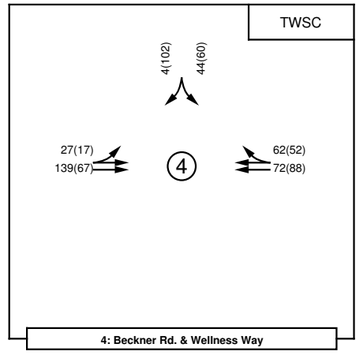 | 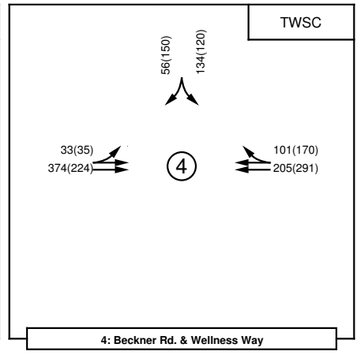 | NO RECOMMENDATIONS |
| 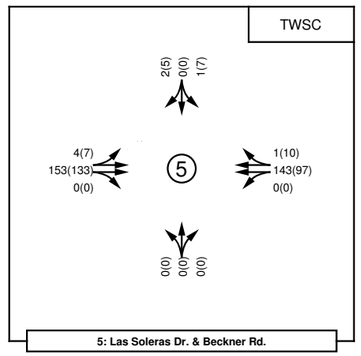 | 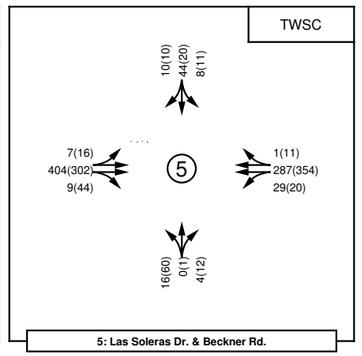 | NO RECOMMENDATIONS |
| 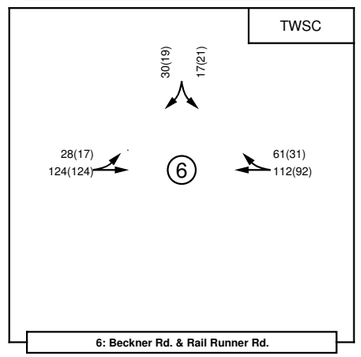 | 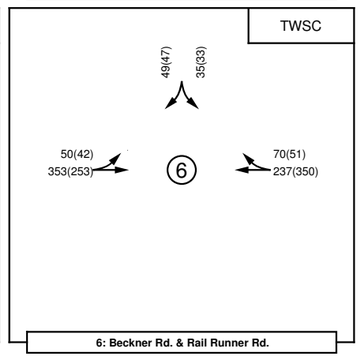 | NO RECOMMENDATIONS |
| 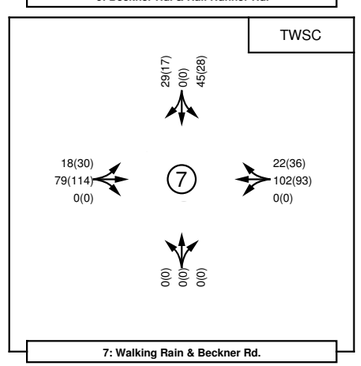 | 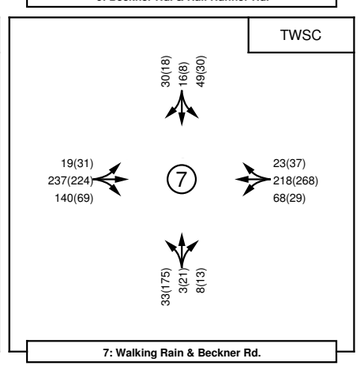 | NO RECOMMENDATIONS |



AM(PM)

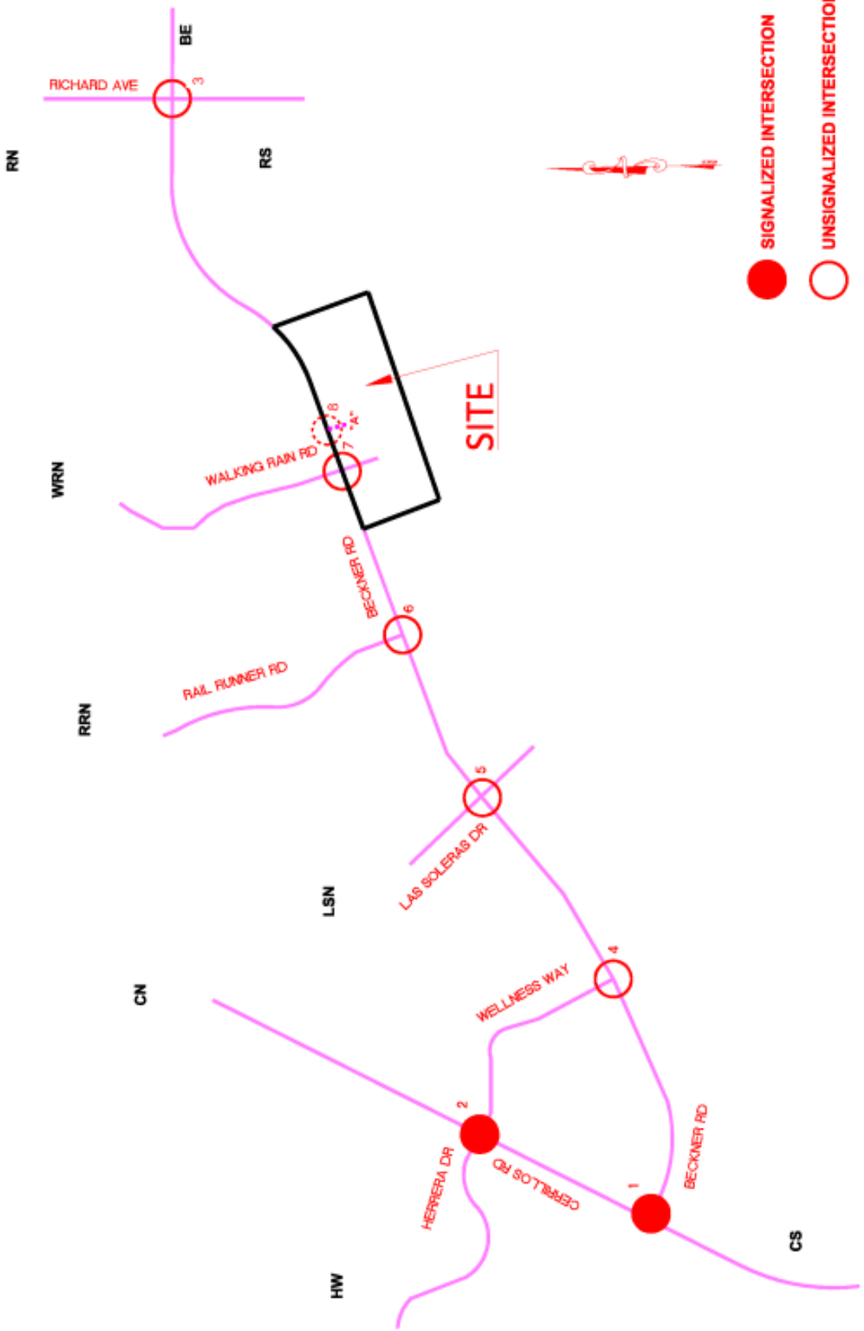


**2035 NO BUILD Conditions**
**[Existing Geometry]**

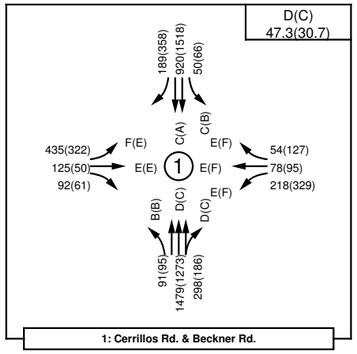


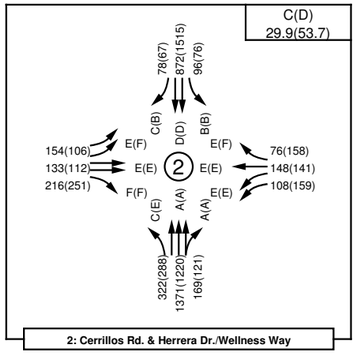


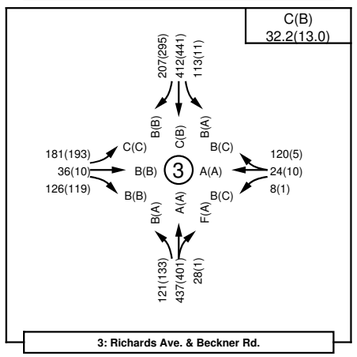


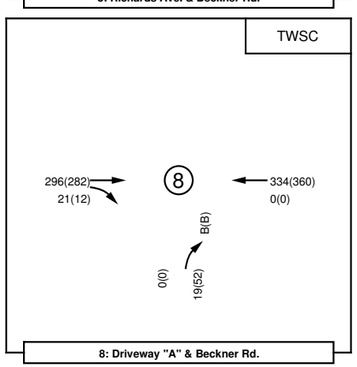


**2035 BUILD Conditions**
**[Existing Geometry]**

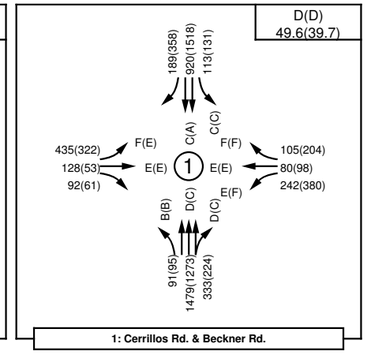


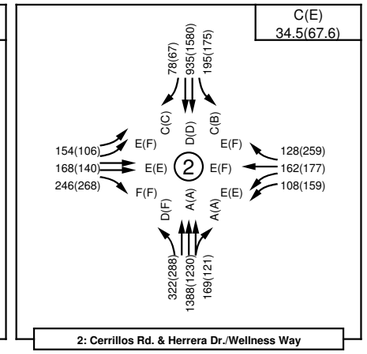


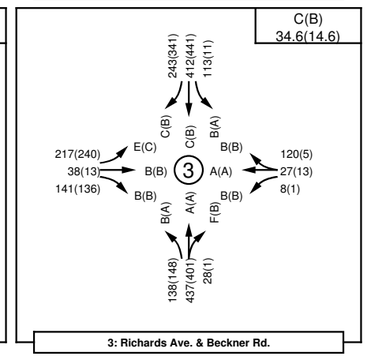


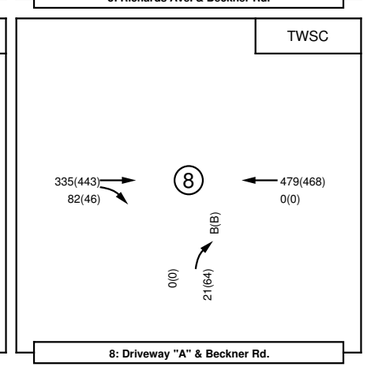


NO RECOMMENDATIONS

NO RECOMMENDATIONS

NO RECOMMENDATIONS

NO RECOMMENDATIONS

***Las Soleras, Tracts 18A & 18B***
(Beckner Rd. / Walking Rain Rd.)
LOS / Volume Analysis Map

AM(PM)

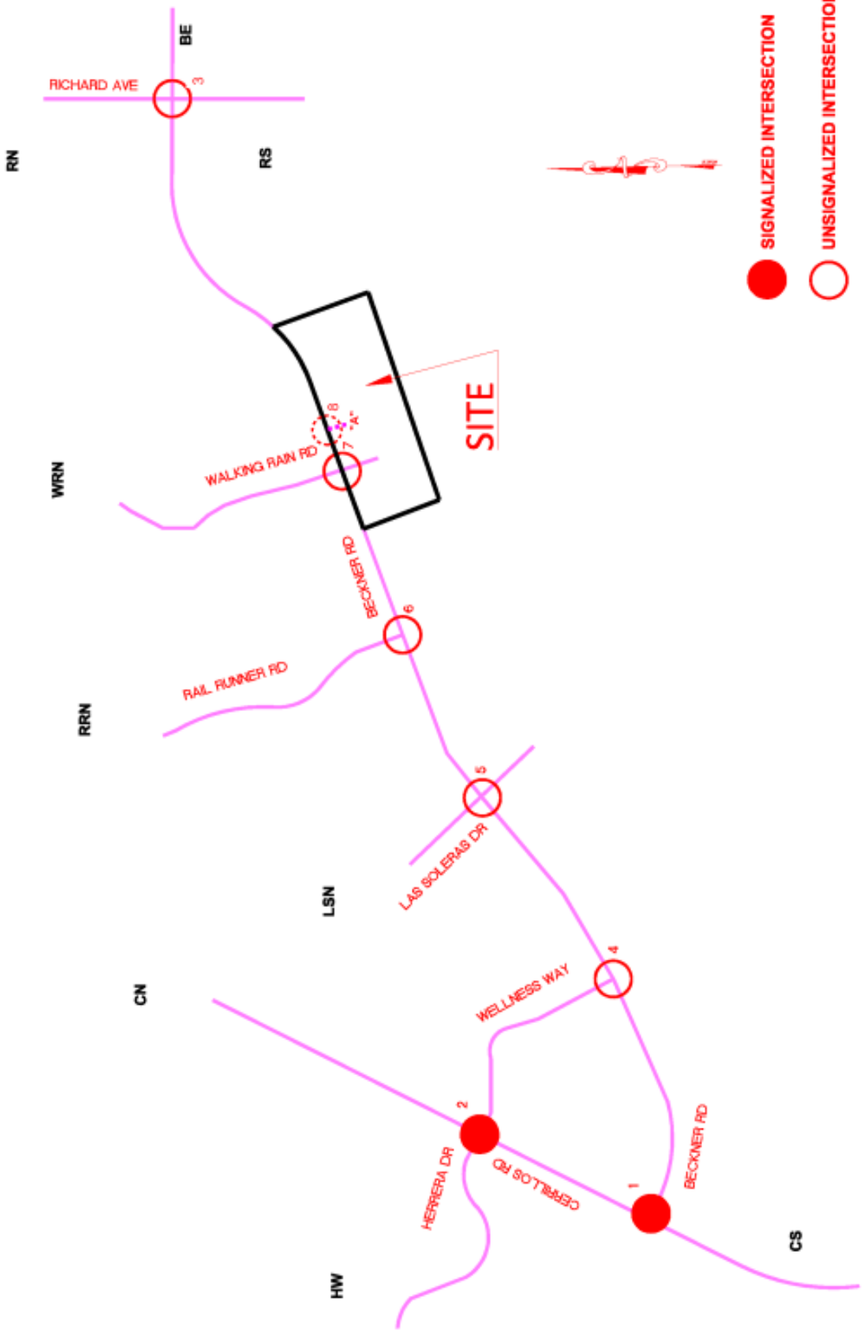


**2035 NO BUILD Conditions**
**[MITIGATED - by others]**

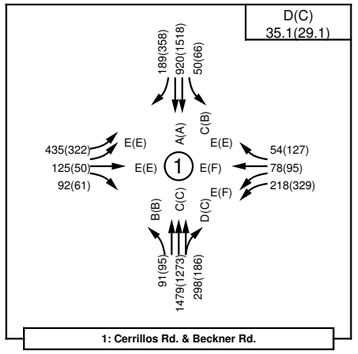


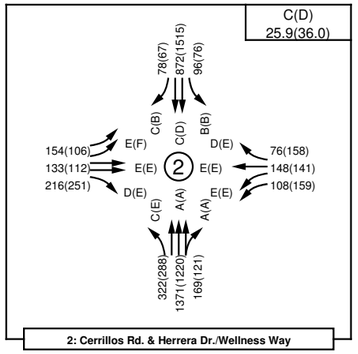


**2035 BUILD Conditions**
**[MITIGATED - by others]**

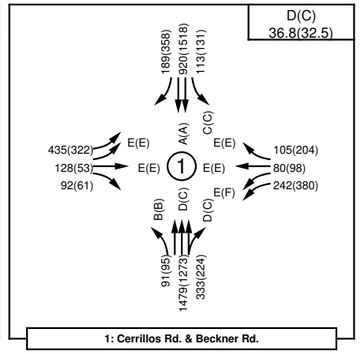


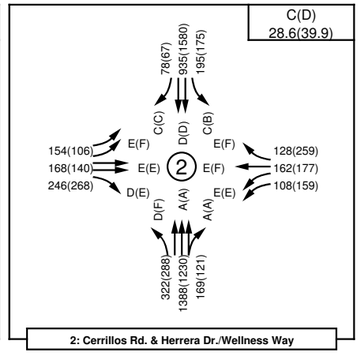


**NO RECOMMENDATIONS**

**NO RECOMMENDATIONS**

***Las Soleras, Tracts 18A & 18B***
(Beckner Rd. / Walking Rain Rd.)
LOS / Volume Analysis Map

**AM(PM)**

# *Las Soleras, Tracts 18A & 18B*
(Beckner Rd. / Walking Rain Rd.)
LOS / Volume Analysis Map

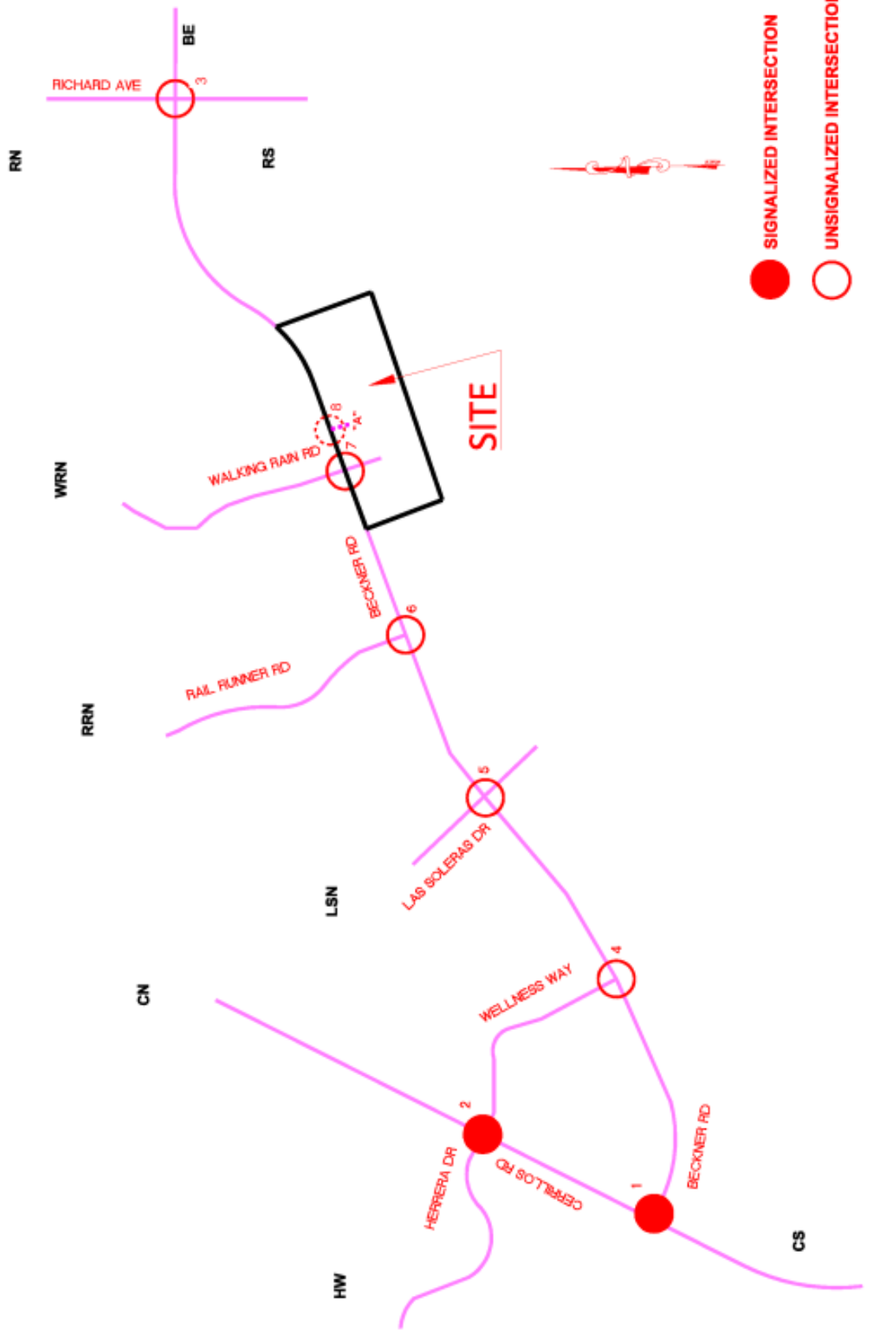


| 2035 NO BUILD Conditions [Existing Geometry] | 2035 BUILD Conditions [Existing Geometry] | |
|---|---|---|
| Roundabout<br>57(170) 142(131)<br>38(38) 401(237) 4 113(180) 219(308)<br>4: Beckner Rd. & Wellness Way | Roundabout<br>57(170) 271(257)<br>38(38) 503(342) 4 213(337) 298(439)<br>4: Beckner Rd. & Wellness Way | **NO RECOMMENDATIONS** |
| Roundabout<br>11(11) 44(20) 8(13)<br>8(18) 434(328) 9(44) 5 1(13) 315(373) 29(20)<br>16(60) 0(1) 4(12)<br>5: Las Soleras Dr. & Beckner Rd. | Roundabout<br>11(11) 44(20) 9(13)<br>8(18) 663(559) 9(44) 5 2(13) 485(615) 29(20)<br>16(60) 0(1) 4(12)<br>5: Las Soleras Dr. & Beckner Rd. | **NO RECOMMENDATIONS** |
| Roundabout<br>55(51) 38(37)<br>55(45) 378(278) 6 82(57) 259(368)<br>6: Beckner Rd. & Rail Runner Rd. | Roundabout<br>55(51) 61(61)<br>55(45) 608(509) 6 105(80) 439(656)<br>6: Beckner Rd. & Rail Runner Rd. | **NO RECOMMENDATIONS** |
| Roundabout<br>35(21) 16(8) 57(35)<br>23(37) 252(246) 140(69) 7 28(44) 238(287) 68(29)<br>33(175) 3(21) 8(13)<br>7: Walking Rain & Beckner Rd. | Roundabout<br>35(21) 16(8) 58(37)<br>23(37) 346(415) 300(156) 7 29(45) 335(368) 115(55)<br>139(407) 4(23) 32(47)<br>7: Walking Rain & Beckner Rd. | **NO RECOMMENDATIONS** |

AM(PM)

The results of the analysis for the intersections in the study area are summarized in a table the Executive Summary and detailed in the following sections:

*INTERSECTION #1 – Cerrillos Rd./Beckner Rd.*

The intersection of Beckner Rd. (I-25 Frntg. Rd.) / Cerrillos Rd. is a signalized intersection for which plans are imminent to reconstruct the intersection to add dual eastbound left turn and dual westbound left turn lanes on Beckner Rd.. These improvements are recommended by recent previous Traffic Impact Studies for a) 5407 Beckner Rd. Development (Santa Fe Engineering) and b)Cavan Development (by BHI). It is assumed in this Study that the developer of 5407 Beckner Rd. Development will be fiscally responsible to construct the recommended dual westbound left turn lanes on Beckner Rd. at Cerrillos Rd. and the development of Cavan will be fiscally responsible to construct the dual eastbound left turn lanes on the Beckner Rd. extension (I-25 Frntg. Rd.) at Cerrillos Rd. The intersection, therefore, will be substantially reconstructed to include the dual eastbound and dual westbound left turn lanes. Signal timing and phasing will be required to accommodate the new geometry. In addition signal split modifications, the 5407 Beckner Rd. Development Traffic Impact Study recommended that right turn overlap phasing be implemented at the intersection. This Study assumes that the MITIGATED conditions (by others) for Beckner Rd. / Cerrillos Rd. will incorporate a westbound right turn overlap phase at minimum.

In the following tables, the base tables assume existing geometry and existing signal timing / phasing while the MITIGATED tables assume the mitigation improvements recommended for this intersection in the 5407 Beckner Rd. Development Traffic Impact Study dated September 14, 2023 by Santa Fe Engineering Consultants, LLC and in the Cavan Multi-Family Development Traffic Impact Study dated March 30, 2023 by Bohannan-Huston, Inc.

The first table will report signalized intersection analysis results for 2022 volumes (base conditions), 2025 AM and PM Peak Hour NO BUILD Conditions, and then 2025 AM and PM Peak Hour BUILD Conditions based on existing geometry and existing signal timing / phasing. The 2025 AM and PM Peak Hour NO BUILD Conditions analysis includes traffic generated by eight other recently studied land development projects as listed on Page 4 of this report. The 2025 BUILD Conditions analysis also includes traffic generated by the proposed Las Soleras, Tracts 18A & 18B Development. The second table will report signalized intersection analysis results for 2025 AM and PM Peak Hour NO BUILD and BUILD Conditions based on the same volumes, but the MITIGATED geometry constructed by others.

The results of the analysis of the signalized intersection of CERRILLOS RD./BECKNER RD. are summarized in the following tables:

Base Conditions (Existing Geometry / Existing Signal Timing / Phasing):

| 1: Cerrillos Rd. & Beckner Rd. 2022 / 2025 Conditions | EB (Beckner Rd.) | | | WB (Beckner Rd.) | | | NB (Cerrillos Rd.) | | | SB (Cerrillos Rd.) | | |
|---|---|---|---|---|---|---|---|---|---|---|---|---|
| | L | T | R | L | T | R | L | T | R | L | T | R |
| Existing Lane Geometry | 1 | 1 | 1 | 1 | 1 | 1 | 1 | 3> | 0 | 1 | 2 | 1 |
| **AM Peak Hour** | | | | | | | | | | | | |
| 2022 Existing Conditions Volumes | 302 | 61 | 70 | 74 | 30 | 21 | 70 | 1,149 | 132 | 23 | 725 | 153 |
| V/C Ratio | 0.73 | 0.24 | | 0.23 | 0.21 | 0.17 | 0.15 | 0.54 | 0.54 | 0.10 | 0.46 | |
| Level-of-Service | E | E | | D | E | E | B | C | C | B | A | |
| Control Delay (Seconds) | 56.5 | 60.8 | 0.0 | 54.4 | 70.1 | 69.8 | 13.6 | 26.2 | 27.3 | 16.4 | 0.8 | 0.0 |
| **Intersection LOS** | **C - 24.8** | | | | | | | | | | | |
| 95th Percentile Queue (veh) | 19.2 | 4.7 | 0.0 | 5.4 | 2.5 | 1.7 | 2.2 | 18.3 | 19.3 | 0.7 | 0.4 | 0.0 |
| 2025 NO BUILD Conditions Volumes | 376 | 113 | 78 | 203 | 72 | 50 | 77 | 1,254 | 272 | 45 | 778 | 159 |
| V/C Ratio | 0.91 | 0.41 | | 0.60 | 0.49 | 0.40 | 0.18 | 0.70 | 0.71 | 0.21 | 0.52 | |
| Level-of-Service | E | E | | E | E | E | B | C | D | C | A | |
| Control Delay (Seconds) | 73.0 | 62.1 | 0.0 | 58.6 | 73.6 | 72.6 | 15.8 | 34.9 | 37.4 | 21.0 | 2.2 | 0.0 |
| **Intersection LOS** | **D - 35.1** | | | | | | | | | | | |
| 95th Percentile Queue (veh) | 26.0 | 8.6 | 0.0 | 13.7 | 6.2 | 4.3 | 2.7 | 25.4 | 26.3 | 1.5 | 1.3 | 0.0 |
| 2025 BUILD Conditions Volumes | 376 | 116 | 78 | 227 | 74 | 101 | 77 | 1,254 | 307 | 108 | 778 | 159 |
| V/C Ratio | 0.92 | 0.47 | | 0.63 | 0.51 | 0.81 | 0.18 | 0.73 | 0.74 | 0.49 | 0.52 | |
| Level-of-Service | E | E | | E | E | F | B | D | D | C | A | |
| Control Delay (Seconds) | 74.6 | 64.6 | 0.0 | 57.7 | 73.8 | 84.0 | 15.9 | 36.9 | 39.9 | 26.4 | 2.1 | 0.0 |
| **Intersection LOS** | **D - 37.3** | | | | | | | | | | | |
| 95th Percentile Queue (veh) | 26.2 | 9.0 | 0.0 | 15.0 | 6.4 | 9.0 | 2.8 | 26.7 | 27.5 | 3.6 | 1.3 | 0.0 |
| **PM Peak Hour** | | | | | | | | | | | | |
| 2022 Existing Conditions Volumes | 221 | 17 | 47 | 133 | 27 | 55 | 68 | 958 | 72 | 30 | 1,218 | 270 |
| V/C Ratio | 0.55 | 0.07 | | 0.40 | 0.18 | 0.44 | 0.17 | 0.35 | 0.35 | 0.08 | 0.63 | |
| Level-of-Service | E | E | | E | E | F | B | C | C | B | A | |
| Control Delay (Seconds) | 60.3 | 70.0 | 0.0 | 66.7 | 79.9 | 83.4 | 12.1 | 20.6 | 21.1 | 12.6 | 1.1 | 0.0 |
| **Intersection LOS** | **B - 19.3** | | | | | | | | | | | |
| 95th Percentile Queue (veh) | 14.3 | 1.4 | 0.0 | 9.8 | 2.3 | 4.8 | 2.0 | 12.6 | 13.4 | 0.8 | 0.6 | 0.0 |
| 2025 NO BUILD Conditions Volumes | 279 | 47 | 52 | 303 | 90 | 116 | 82 | 1,085 | 172 | 60 | 1,280 | 305 |
| V/C Ratio | 0.73 | 0.19 | | 0.74 | 0.46 | 0.71 | 0.21 | 0.47 | 0.47 | 0.18 | 0.69 | |
| Level-of-Service | E | E | | E | E | F | B | C | C | B | A | |
| Control Delay (Seconds) | 62.8 | 71.4 | 0.0 | 71.3 | 79.1 | 92.1 | 14.2 | 26.7 | 27.5 | 15.2 | 1.5 | 0.0 |
| **Intersection LOS** | **C - 28.0** | | | | | | | | | | | |
| 95th Percentile Queue (veh) | 17.9 | 3.7 | 0.0 | 20.7 | 7.7 | 10.2 | 2.6 | 17.4 | 18.0 | 1.7 | 0.7 | 0.0 |
| 2025 BUILD Conditions Volumes | 279 | 50 | 52 | 354 | 93 | 193 | 82 | 1,085 | 210 | 125 | 1,280 | 305 |
| V/C Ratio | 0.74 | 0.21 | | 0.87 | 0.48 | 1.17 | 0.21 | 0.49 | 0.49 | 0.39 | 0.69 | |
| Level-of-Service | E | E | | F | E | F | B | C | C | B | A | |
| Control Delay (Seconds) | 63.5 | 71.6 | 0.0 | 84.3 | 79.4 | 205.0 | 14.2 | 27.4 | 28.3 | 16.7 | 1.4 | 0.0 |
| **Intersection LOS** | **D - 37.1** | | | | | | | | | | | |
| 95th Percentile Queue (veh) | 18.0 | 4.0 | 0.0 | 10.6 | 7.9 | 21.4 | 2.6 | 18.2 | 18.7 | 3.7 | 0.7 | 0.0 |

MITIGATED Conditions (MITIGATED Geometry / Optimized Signal Timing / Phasing):

| 1: Cerrillos Rd. & Beckner Rd. 2025 Conditions (MITIGATED) | EB (Beckner Rd.) | | | WB (Beckner Rd.) | | | NB (Cerrillos Rd.) | | | SB (Cerrillos Rd.) | | |
|---|---|---|---|---|---|---|---|---|---|---|---|---|
| | L | T | R | L | T | R | L | T | R | L | T | R |
| Existing Lane Geometry | 2 | 1 | 1 | 2 | 1 | 1 | 1 | 3> | 0 | 1 | 2 | 1 |
| **AM Peak Hour (MITIGATED - by others)** | | | | | | | | | | | | |
| 2025 NO BUILD Conditions Volumes | 376 | 113 | 78 | 203 | 72 | 50 | 77 | 1,254 | 272 | 45 | 778 | 159 |
| V/C Ratio | 0.70 | 0.46 | | 0.56 | 0.49 | 0.21 | 0.17 | 0.66 | 0.66 | 0.20 | 0.49 | |
| Level-of-Service | E | E | | E | E | E | B | C | C | B | A | |
| Control Delay (Seconds) | 66.6 | 65.0 | 0.0 | 69.6 | 73.6 | 58.9 | 13.6 | 30.6 | 32.6 | 18.3 | 0.8 | 0.0 |
| **Intersection LOS** | **C - 32.4** | | | | | | | | | | | |
| 95th Percentile Queue (veh) | 13.6 | 8.8 | 0.0 | 8.3 | 6.2 | 3.8 | 2.5 | 23.8 | 24.5 | 1.3 | 0.4 | 0.0 |
| 2025 BUILD Conditions Volumes | 376 | 116 | 78 | 227 | 74 | 101 | 77 | 1,254 | 307 | 108 | 778 | 159 |
| V/C Ratio | 0.70 | 0.48 | | 0.63 | 0.51 | 0.41 | 0.17 | 0.69 | 0.69 | 0.47 | 0.49 | |
| Level-of-Service | E | E | | E | E | E | B | C | C | C | A | |
| Control Delay (Seconds) | 66.6 | 65.3 | 0.0 | 70.6 | 73.8 | 60.6 | 13.7 | 32.3 | 34.7 | 23.1 | 0.8 | 0.0 |
| **Intersection LOS** | **C - 33.9** | | | | | | | | | | | |
| 95th Percentile Queue (veh) | 13.6 | 9.0 | 0.0 | 9.1 | 6.4 | 7.8 | 2.5 | 25.0 | 25.7 | 3.4 | 0.4 | 0.0 |
| **PM Peak Hour (MITIGATED - by others)** | | | | | | | | | | | | |
| 2025 NO BUILD Conditions Volumes | 279 | 47 | 52 | 303 | 90 | 116 | 82 | 1,085 | 172 | 60 | 1,280 | 305 |
| V/C Ratio | 0.52 | 0.19 | | 0.85 | 0.60 | 0.47 | 0.21 | 0.45 | 0.45 | 0.18 | 0.66 | |
| Level-of-Service | E | E | | F | F | E | B | C | C | B | A | |
| Control Delay (Seconds) | 71.8 | 70.9 | 0.0 | 88.5 | 85.2 | 71.7 | 12.5 | 23.9 | 24.7 | 13.4 | 1.3 | 0.0 |
| **Intersection LOS** | **C - 28.5** | | | | | | | | | | | |
| 95th Percentile Queue (veh) | 10.5 | 3.7 | 0.0 | 12.3 | 7.9 | 9.0 | 2.4 | 16.5 | 17.1 | 1.6 | 0.7 | 0.0 |
| 2025 BUILD Conditions Volumes | 279 | 50 | 52 | 354 | 93 | 193 | 82 | 1,085 | 210 | 125 | 1,280 | 305 |
| V/C Ratio | 0.58 | 0.18 | | 0.89 | 0.40 | 0.60 | 0.21 | 0.49 | 0.49 | 0.39 | 0.70 | |
| Level-of-Service | E | E | | F | E | E | B | C | C | B | A | |
| Control Delay (Seconds) | 75.3 | 68.0 | 0.0 | 92.7 | 74.7 | 67.5 | 14.7 | 28.2 | 29.1 | 17.3 | 1.5 | 0.0 |
| **Intersection LOS** | **C - 31.9** | | | | | | | | | | | |
| 95th Percentile Queue (veh) | 10.7 | 3.9 | 0.0 | 14.3 | 7.7 | 13.5 | 2.7 | 18.5 | 18.9 | 3.8 | 0.7 | 0.0 |

Base Conditions (Existing Geometry / Existing Signal Timing / Phasing):

| 1: Cerrillos Rd. & Beckner Rd. | EB (Beckner Rd.) | | | WB (Beckner Rd.) | | | NB (Cerrillos Rd.) | | | SB (Cerrillos Rd.) | | |
|---|---|---|---|---|---|---|---|---|---|---|---|---|
| 2035 Conditions | L | T | R | L | T | R | L | T | R | L | T | R |
| Existing Lane Geometry | 1 | 1 | 1 | 1 | 1 | 1 | 1 | 3> | 0 | 1 | 2 | 1 |
| **AM Peak Hour** | | | | | | | | | | | | |
| 2035 NO BUILD Conditions Volumes | 435 | 125 | 92 | 218 | 78 | 54 | 91 | 1,479 | 298 | 50 | 920 | 189 |
| V/C Ratio | 1.06 | 0.48 | | 0.62 | 0.54 | 0.44 | 0.29 | 0.82 | 0.83 | 0.26 | 0.62 | |
| Level-of-Service | F | E | | E | E | E | B | D | D | C | C | |
| Control Delay (Seconds) | 114.0 | 64.2 | 0.0 | 58.1 | 74.3 | 73.1 | 19.5 | 40.3 | 45.3 | 28.9 | 21.5 | 0.0 |
| **Intersection LOS** | **D - 47.3** | | | | | | | | | | | |
| 95th Percentile Queue (veh) | 16.4 | 9.5 | 0.0 | 14.5 | 6.8 | 4.6 | 3.3 | 31.6 | 33.8 | 1.8 | 15.1 | 0.0 |
| 2035 BUILD Conditions Volumes | 435 | 128 | 92 | 242 | 80 | 105 | 91 | 1,479 | 333 | 113 | 920 | 189 |
| V/C Ratio | 1.06 | 0.53 | | 0.67 | 0.52 | 0.81 | 0.29 | 0.85 | 0.87 | 0.58 | 0.63 | |
| Level-of-Service | F | E | | E | E | F | B | D | D | C | C | |
| Control Delay (Seconds) | 112.0 | 66.0 | 0.0 | 57.4 | 73.4 | 83.0 | 19.9 | 43.6 | 50.2 | 34.4 | 21.9 | 0.0 |
| **Intersection LOS** | **D - 49.6** | | | | | | | | | | | |
| 95th Percentile Queue (veh) | 16.4 | 9.8 | 0.0 | 15.9 | 6.9 | 9.2 | 3.3 | 33.5 | 36.0 | 4.4 | 15.1 | 0.0 |
| **PM Peak Hour** | | | | | | | | | | | | |
| 2035 NO BUILD Conditions Volumes | 322 | 50 | 61 | 329 | 95 | 127 | 95 | 1,273 | 186 | 66 | 1,518 | 358 |
| V/C Ratio | 0.82 | 0.20 | | 0.84 | 0.56 | 0.88 | 0.28 | 0.55 | 0.55 | 0.23 | 0.83 | |
| Level-of-Service | E | E | | F | F | F | B | C | C | B | A | |
| Control Delay (Seconds) | 71.0 | 71.2 | 0.0 | 83.1 | 82.9 | 118.0 | 14.6 | 28.8 | 29.9 | 16.8 | 2.0 | 0.0 |
| **Intersection LOS** | **C - 30.7** | | | | | | | | | | | |
| 95th Percentile Queue (veh) | | | | | | | | | | | | |
| 2035 BUILD Conditions Volumes | 322 | 53 | 61 | 380 | 98 | 204 | 95 | 1,273 | 224 | 131 | 1,518 | 358 |
| V/C Ratio | 0.81 | 0.20 | | 0.93 | 0.50 | 1.24 | 0.28 | 0.58 | 0.58 | 0.47 | 0.84 | |
| Level-of-Service | E | E | | F | E | F | B | C | C | C | A | |
| Control Delay (Seconds) | 67.9 | 69.4 | 0.0 | 96.2 | 79.8 | 229.0 | 15.5 | 31.1 | 32.4 | 20.2 | 1.9 | 0.0 |
| **Intersection LOS** | **D - 39.7** | | | | | | | | | | | |
| 95th Percentile Queue (veh) | 21.0 | 4.1 | 0.0 | 14.4 | 8.2 | 23.3 | 3.2 | 22.2 | 23.0 | 3.8 | 0.9 | 0.0 |

MITIGATED Conditions (MITIGATED Geometry / Optimized Signal Timing / Phasing)

| 1: Cerrillos Rd. & Beckner Rd. 2035 Conditions - MITIGATED | EB (Beckner Rd.) | | | WB (Beckner Rd.) | | | NB (Cerrillos Rd.) | | | SB (Cerrillos Rd.) | | |
|---|---|---|---|---|---|---|---|---|---|---|---|---|
| | L | T | R | L | T | R | L | T | R | L | T | R |
| Existing Lane Geometry | 2 | 1 | 1 | 2 | 1 | 1 | 1 | 3> | 0 | 1 | 2 | 1 |
| **AM Peak Hour** | | | | | | | | | | | | |
| 2035 NO BUILD Conditions Volumes | 435 | 125 | 92 | 218 | 78 | 54 | 91 | 1,479 | 298 | 50 | 920 | 189 |
| V/C Ratio | 0.81 | 0.51 | | 0.60 | 0.54 | 0.23 | 0.22 | 0.77 | 0.78 | 0.25 | 0.58 | |
| Level-of-Service | E | E | | E | E | E | B | C | D | C | A | |
| Control Delay (Seconds) | 72.3 | 65.8 | 0.0 | 70.2 | 74.3 | 58.8 | 13.8 | 34.9 | 38.6 | 23.4 | 1.1 | 0.0 |
| **Intersection LOS** | **D - 35.1** | | | | | | | | | | | |
| 95th Percentile Queue (veh) | 16.1 | 9.6 | 0.0 | 8.8 | 6.8 | 4.1 | 3.0 | 29.5 | 31.3 | 1.5 | 0.5 | 0.0 |
| 2035 BUILD Conditions Volumes | 435 | 128 | 92 | 242 | 80 | 105 | 91 | 1,479 | 333 | 113 | 920 | 189 |
| V/C Ratio | 0.81 | 0.53 | | 0.67 | 0.55 | 0.42 | 0.22 | 0.80 | 0.81 | 0.55 | 0.58 | |
| Level-of-Service | E | E | | E | E | E | B | D | D | C | A | |
| Control Delay (Seconds) | 72.3 | 66.0 | 0.0 | 71.2 | 74.5 | 60.9 | 13.9 | 36.7 | 41.2 | 30.7 | 1.0 | 0.0 |
| **Intersection LOS** | **D - 36.8** | | | | | | | | | | | |
| 95th Percentile Queue (veh) | 16.1 | 9.8 | 0.0 | 9.7 | 6.9 | 8.1 | 3.0 | 30.9 | 32.9 | 4.5 | 0.5 | 0.0 |
| **PM Peak Hour** | | | | | | | | | | | | |
| 2035 NO BUILD Conditions Volumes | 322 | 50 | 61 | 329 | 95 | 127 | 95 | 1,273 | 186 | 66 | 1,518 | 358 |
| V/C Ratio | 0.60 | 0.20 | | 0.88 | 0.58 | 0.49 | 0.27 | 0.53 | 0.53 | 0.22 | 0.80 | |
| Level-of-Service | E | E | | F | F | E | B | C | C | B | A | |
| Control Delay (Seconds) | 73.6 | 70.7 | 0.0 | 91.6 | 83.9 | 71.0 | 13.2 | 26.4 | 27.4 | 15.2 | 1.8 | 0.0 |
| **Intersection LOS** | **C - 29.1** | | | | | | | | | | | |
| 95th Percentile Queue (veh) | | | | | | | | | | | | |
| 2035 BUILD Conditions Volumes | 322 | 53 | 61 | 380 | 98 | 204 | 95 | 1,273 | 224 | 131 | 1,518 | 358 |
| V/C Ratio | 0.66 | 0.19 | | 0.89 | 0.40 | 0.61 | 0.28 | 0.58 | 0.58 | 0.47 | 0.84 | |
| Level-of-Service | E | E | | F | E | E | B | C | C | C | A | |
| Control Delay (Seconds) | 78.0 | 68.3 | 0.0 | 93.7 | 73.8 | 67.0 | 15.5 | 31.0 | 32.3 | 20.2 | 2.2 | 0.0 |
| **Intersection LOS** | **C - 32.5** | | | | | | | | | | | |
| 95th Percentile Queue (veh) | 12.3 | 4.1 | 0.0 | 15.3 | 7.9 | 14.1 | 3.2 | 22.2 | 22.9 | 3.9 | 1.1 | 0.0 |

Analysis of the intersection of CERRILLOS RD./ BECKNER RD. demonstrates that the overall intersections delays will be acceptable for the 2025 and 2035, AM Peak Hour and PM Peak Hour conditions analyzed in this report. LOS intersection ratings for all conditions are “D” or better which exceeds the New Mexico Department of Transportation’s Minimum Acceptable Level of Service Standard of ‘D’ for an urban principal arterial. Analysis assuming existing geometry / existing signal timing / phasing indicates that the intersection will operating almost at LOS “E” in the horizon year, but that assumes that the MITIGATION improvements will not be constructed by the other two developments considered in this Study. If one or both of the other two developments cannot be fiscally responsible to build their share of the improvements, then it is assumed that their project did not move forward and, therefore, the trips from that particular development will not be generated as well. Analysis of the intersection of CERRILLOS RD. / BECKNER RD. [assuming mitigated geometry / signal improvements (by others)] demonstrates that the intersection capacity is sufficient to accommodate the new trips generated by Las Soleras, Tracts 18A & 18B and that the overall intersections levels-of-service are satisfactory for all conditions

analyzed. For the MITIGATED conditions (by others), the operation of the signalized intersection of Beckner Rd. / Cerrillos Rd. will be at level-of-service "C" for the implementation year and marginally into level-of-service "D" for the horizon year conditions. Therefore, no recommendation is made for the signalized intersection of Beckner Rd. / Cerrillos Rd.

*INTERSECTION #2 – Cerrillos Rd. / Herrera Dr. (Wellness Way)*

The intersection of Herrera Dr. (Wellness Way) / Cerrillos Rd. is an existing signalized intersection. The recent previous Traffic Impact Study for 5407 Beckner Rd. Development (Santa Fe Engineering) recommended that right turn overlap phasing be implemented at the intersection. It is assumed in this Study that the developer of 5407 Beckner Rd. Development will be fiscally responsible to construct the recommended eastbound right turn overlap phasing at this intersection. This Study, therefore, assumes that the MITIGATED conditions (by others) for Beckner Rd. / Cerrillos Rd. will incorporate an eastbound right turn overlap phase..

In the following tables, the base tables assume existing geometry and existing signal timing / phasing while the MITIGATED tables assume the mitigation improvements recommended for this intersection in the 5407 Beckner Rd. Development Traffic Impact Study dated September 14, 2023 by Santa Fe Engineering Consultants, LLC.

The first table will report signalized intersection analysis results for 2022 volumes (base conditions), 2025 AM and PM Peak Hour NO BUILD Conditions, and then 2025 AM and PM Peak Hour BUILD Conditions based on existing geometry and existing signal timing / phasing. The 2025 AM and PM Peak Hour NO BUILD Conditions analysis includes traffic generated by eight other recently studied land development projects as listed on Page 4 of this report. The 2025 BUILD Conditions analysis also includes traffic generated by the proposed Las Soleras, Tracts 18A & 18B Development. The second table will report signalized intersection analysis results for 2025 AM and PM Peak Hour NO BUILD and BUILD Conditions based on the same volumes, but the MITIGATED signal timing / phasing implemented by the developer of 5407 Beckner Rd. Development..

The results of the analysis of the signalized intersection of HERRERA DR. (WELLNESS WAY) ./BECKNER RD. are summarized in the following tables:

Base Conditions (Existing Geometry / Existing Signal Timing / Phasing):

| 2: Cerrillos Rd / Herrera.(Wellness Way) | EB (Wellness Way) | | | WB (Wellness Way) | | | NB (Cerrillos Rd.) | | | SB (Cerrillos Rd.) | | |
|---|---|---|---|---|---|---|---|---|---|---|---|---|
| 2022 / 2025 Conditions | L | T | R | L | T | R | L | T | R | L | T | R |
| Existing Lane Geometry | 2 | 2 | 1 | 2 | 1 | 1 | 1 | 3> | 0 | 1 | 2 | 1 |
| **AM Peak Hour** | | | | | | | | | | | | |
| 2022 Existing Conditions Volumes | 124 | 64 | 161 | 84 | 86 | 38 | 240 | 1,073 | 95 | 47 | 684 | 63 |
| V/C Ratio | 0.47 | 0.16 | 0.89 | 0.24 | 0.33 | 0.17 | 0.58 | 0.49 | 0.49 | 0.14 | 0.45 | 0.09 |
| Level-of-Service | E | E | F | E | E | E | B | A | A | B | C | C |
| Control Delay (Seconds) | 72.3 | 63.4 | 91.1 | 66.1 | 61.7 | 59.8 | 15.0 | 0.7 | 1.4 | 14.6 | 27.1 | 21.5 |
| **Intersection LOS** | **C - 24.0** | | | | | | | | | | | |
| 95th Percentile Queue (veh) | 5.4 | 2.6 | 14.1 | 3.5 | 6.9 | 3.0 | 6.6 | 0.3 | 0.7 | 1.6 | 15.4 | 2.9 |
| 2025 NO BUILD Conditions Volumes | 129 | 121 | 184 | 92 | 131 | 68 | 275 | 1,160 | 151 | 87 | 738 | 66 |
| V/C Ratio | 0.48 | 0.26 | 0.90 | 0.26 | 0.45 | 0.28 | 0.72 | 0.58 | 0.58 | 0.28 | 0.50 | 0.10 |
| Level-of-Service | E | E | F | E | E | E | B | A | A | B | C | C |
| Control Delay (Seconds) | 72.5 | 62.1 | 93.5 | 66.2 | 61.3 | 58.8 | 19.0 | 0.8 | 1.6 | 16.2 | 29.9 | 23.2 |
| **Intersection LOS** | **C - 26.2** | | | | | | | | | | | |
| 95th Percentile Queue (veh) | 5.6 | 4.8 | 16.0 | 3.8 | 9.9 | 5.3 | 7.6 | 0.4 | 0.7 | 3.2 | 17.4 | 3.2 |
| 2025 BUILD Conditions Volumes | 129 | 156 | 214 | 92 | 145 | 120 | 275 | 1,177 | 151 | 186 | 801 | 66 |
| V/C Ratio | 0.48 | 0.30 | 0.92 | 0.26 | 0.45 | 0.44 | 0.79 | 0.61 | 0.61 | 0.61 | 0.57 | 0.11 |
| Level-of-Service | E | E | F | E | E | E | C | A | A | C | C | C |
| Control Delay (Seconds) | 72.5 | 59.8 | 98.3 | 66.2 | 58.7 | 58.6 | 23.4 | 1.3 | 2.1 | 20.3 | 33.6 | 25.2 |
| **Intersection LOS** | **C - 29.1** | | | | | | | | | | | |
| 95th Percentile Queue (veh) | 5.6 | 6.2 | 18.7 | 3.8 | 10.6 | 9.1 | 8.0 | 0.7 | 1.1 | 7.8 | 19.9 | 3.3 |
| **PM Peak Hour** | | | | | | | | | | | | |
| 2022 Existing Conditions Volumes | 86 | 57 | 190 | 126 | 66 | 70 | 211 | 936 | 54 | 27 | 1,212 | 54 |
| V/C Ratio | 0.33 | 0.16 | 1.17 | 0.36 | 0.27 | 0.34 | 0.61 | 0.32 | 0.33 | 0.06 | 0.63 | 0.06 |
| Level-of-Service | F | E | F | E | E | E | C | A | A | B | C | B |
| Control Delay (Seconds) | 81.0 | 75.0 | 203.0 | 77.1 | 72.3 | 73.4 | 21.0 | 0.4 | 0.7 | 13.0 | 28.5 | 18.1 |
| **Intersection LOS** | **D - 35.7** | | | | | | | | | | | |
| 95th Percentile Queue (veh) | 3.8 | 2.4 | 21.4 | 5.4 | 5.4 | 5.9 | 6.7 | 0.2 | 0.4 | 0.8 | 26.1 | 2.1 |
| 2025 NO BUILD Conditions Volumes | 89 | 100 | 214 | 134 | 128 | 144 | 246 | 1,036 | 110 | 71 | 1,277 | 56 |
| V/C Ratio | 0.34 | 0.27 | 1.31 | 0.38 | 0.53 | 0.71 | 0.74 | 0.39 | 0.39 | 0.17 | 0.67 | 0.07 |
| Level-of-Service | F | E | F | E | E | F | C | A | A | B | C | B |
| Control Delay (Seconds) | 81.1 | 76.2 | 259.0 | 77.4 | 76.6 | 86.5 | 29.4 | 0.5 | 0.9 | 12.2 | 29.6 | 18.1 |
| **Intersection LOS** | **D - 41.7** | | | | | | | | | | | |
| 95th Percentile Queue (veh) | 3.9 | 4.2 | 25.8 | 5.7 | 10.3 | 12.1 | 10.2 | 0.2 | 0.5 | 2.1 | 28.1 | 2.2 |
| 2025 BUILD Conditions Volumes | 89 | 128 | 231 | 134 | 164 | 245 | 246 | 1,046 | 110 | 170 | 1,342 | 56 |
| V/C Ratio | 0.34 | 0.35 | 1.42 | 0.38 | 0.68 | 1.20 | 0.78 | 0.39 | 0.39 | 0.40 | 0.70 | 0.07 |
| Level-of-Service | F | E | F | E | F | F | C | A | A | B | C | B |
| Control Delay (Seconds) | 81.1 | 77.0 | 301.0 | 77.4 | 83.4 | 206.0 | 33.6 | 0.5 | 0.9 | 13.3 | 30.8 | 18.1 |
| **Intersection LOS** | **D - 54.2** | | | | | | | | | | | |
| 95th Percentile Queue (veh) | 3.9 | 5.5 | 29.2 | 5.7 | 13.2 | 26.8 | 10.4 | 0.2 | 0.5 | 5.3 | 30.2 | 2.2 |

MITIGATED Conditions (MITIGATED Geometry / Optimized Signal Timing / Phasing):

| 2: Cerrillos Rd / Herrera (Wellness Way) | EB (Wellness Way) | | | WB (Wellness Way) | | | NB (Cerrillos Rd.) | | | SB (Cerrillos Rd.) | | |
|---|---|---|---|---|---|---|---|---|---|---|---|---|
| 2035 Conditions - MITIGATED | L | T | R | L | T | R | L | T | R | L | T | R |
| Existing Lane Geometry | 2 | 2 | 1 | 2 | 1 | 1 | 1 | 3> | 0 | 1 | 2 | 1 |
| **AM Peak Hour** | | | | | | | | | | | | |
| 2035 NO BUILD Conditions Volumes | 154 | 133 | 216 | 108 | 148 | 76 | 322 | 1,371 | 169 | 96 | 872 | 78 |
| V/C Ratio | 0.58 | 0.29 | 0.55 | 0.30 | 0.51 | 0.20 | 0.92 | 0.68 | 0.68 | 0.35 | 0.62 | 0.12 |
| Level-of-Service | E | E | D | E | E | D | C | A | A | B | C | C |
| Control Delay (Seconds) | 73.6 | 62.1 | 50.4 | 66.6 | 61.8 | 46.3 | 33.0 | 1.1 | 2.1 | 17.9 | 34.7 | 25.2 |
| **Intersection LOS** | **C - 25.9** | | | | | | | | | | | |
| 95th Percentile Queue (veh) | 6.8 | 5.3 | 14.0 | 4.5 | 11.0 | 5.2 | 10.2 | 0.5 | 1.0 | 3.7 | 21.9 | 3.9 |
| 2035 BUILD Conditions Volumes | 154 | 168 | 246 | 108 | 162 | 128 | 322 | 1,388 | 169 | 195 | 935 | 78 |
| V/C Ratio | 0.58 | 0.35 | 0.61 | 0.30 | 0.54 | 0.51 | 0.95 | 0.69 | 0.70 | 0.71 | 0.67 | 0.13 |
| Level-of-Service | E | E | D | E | E | E | D | A | A | C | D | C |
| Control Delay (Seconds) | 74.5 | 62.4 | 51.8 | 66.6 | 62.4 | 61.6 | 39.4 | 1.1 | 2.2 | 22.1 | 37.2 | 26.0 |
| **Intersection LOS** | **C - 28.6** | | | | | | | | | | | |
| 95th Percentile Queue (veh) | 6.9 | 6.8 | 16.0 | 4.5 | 12.0 | 9.8 | 10.4 | 0.5 | 1.0 | 8.3 | 24.3 | 4.0 |
| **PM Peak Hour** | | | | | | | | | | | | |
| 2035 NO BUILD Conditions Volumes | 106 | 112 | 251 | 159 | 141 | 158 | 288 | 1,220 | 121 | 76 | 1,515 | 67 |
| V/C Ratio | 0.40 | 0.31 | 0.71 | 0.45 | 0.58 | 0.49 | 0.96 | 0.46 | 0.46 | 0.20 | 0.82 | 0.08 |
| Level-of-Service | F | E | E | E | E | E | E | A | A | B | D | B |
| Control Delay (Seconds) | 81.7 | 76.6 | 71.6 | 78.2 | 78.5 | 64.7 | 76.8 | 0.6 | 1.2 | 13.5 | 37.8 | 19.7 |
| **Intersection LOS** | **D - 36.0** | | | | | | | | | | | |
| 95th Percentile Queue (veh) | | | | | | | | | | | | |
| 2035 BUILD Conditions Volumes | 106 | 140 | 268 | 159 | 177 | 259 | 288 | 1,230 | 121 | 175 | 1,580 | 67 |
| V/C Ratio | 0.40 | 0.38 | 0.74 | 0.45 | 0.73 | 0.80 | 0.96 | 0.46 | 0.46 | 0.47 | 0.86 | 0.08 |
| Level-of-Service | F | E | E | E | F | F | F | A | A | B | D | C |
| Control Delay (Seconds) | 81.7 | 77.4 | 71.9 | 78.2 | 87.3 | 80.9 | 81.5 | 0.6 | 1.1 | 15.6 | 41.9 | 20.5 |
| **Intersection LOS** | **D - 39.9** | | | | | | | | | | | |
| 95th Percentile Queue (veh) | 4.7 | 6.0 | 19.1 | 6.9 | 14.3 | 19.5 | 20.5 | 0.3 | 0.6 | 6.0 | 42.1 | 2.8 |

Base Conditions (Existing Geometry / Existing Signal Timing / Phasing):

| 2: Cerrillos Rd / Herrera (Wellness Way) | EB (Wellness Way) | | | WB (Wellness Way) | | | NB (Cerrillos Rd.) | | | SB (Cerrillos Rd.) | | |
|---|---|---|---|---|---|---|---|---|---|---|---|---|
| **2035 Conditions** | L | T | R | L | T | R | L | T | R | L | T | R |
| Existing Lane Geometry | 2 | 2 | 1 | 2 | 1 | 1 | 1 | 3> | 0 | 1 | 2 | 1 |
| **AM Peak Hour** | | | | | | | | | | | | |
| 2035 NO BUILD Conditions Volumes | 154 | 133 | 216 | 108 | 148 | 76 | 322 | 1,371 | 169 | 96 | 872 | 78 |
| V/C Ratio | 0.58 | 0.25 | 0.92 | 0.30 | 0.46 | 0.28 | 0.93 | 0.71 | 0.71 | 0.35 | 0.65 | 0.13 |
| Level-of-Service | E | E | F | E | E | E | C | A | A | B | D | C |
| Control Delay (Seconds) | 73.6 | 59.2 | 99.1 | 66.6 | 58.6 | 55.9 | 34.6 | 1.5 | 2.4 | 19.9 | 38.1 | 27.6 |
| **Intersection LOS** | **C - 29.9** | | | | | | | | | | | |
| 95th Percentile Queue (veh) | 6.8 | 5.2 | 18.9 | 4.5 | 10.7 | 5.8 | 9.6 | 0.9 | 1.3 | 4.0 | 22.9 | 4.1 |
| 2035 BUILD Conditions Volumes | 154 | 168 | 246 | 108 | 162 | 128 | 322 | 1,388 | 169 | 195 | 935 | 78 |
| V/C Ratio | 0.58 | 0.30 | 0.97 | 0.30 | 0.47 | 0.44 | 0.96 | 0.74 | 0.74 | 0.74 | 0.75 | 0.14 |
| Level-of-Service | E | E | F | E | E | E | D | A | A | C | D | C |
| Control Delay (Seconds) | 73.6 | 57.9 | 111.0 | 66.6 | 57.1 | 56.7 | 41.1 | 2.8 | 3.6 | 27.1 | 45.1 | 30.8 |
| **Intersection LOS** | **C - 34.5** | | | | | | | | | | | |
| 95th Percentile Queue (veh) | 6.8 | 6.5 | 22.3 | 4.5 | 11.5 | 9.5 | 10.7 | 2.1 | 2.5 | 9.2 | 26.6 | 4.4 |
| **PM Peak Hour** | | | | | | | | | | | | |
| 2035 NO BUILD Conditions Volumes | 106 | 112 | 251 | 159 | 141 | 158 | 288 | 1,220 | 121 | 76 | 1,515 | 67 |
| V/C Ratio | 0.40 | 0.31 | 1.54 | 0.45 | 0.58 | 0.77 | 0.96 | 0.46 | 0.46 | 0.20 | 0.82 | 0.08 |
| Level-of-Service | F | E | F | E | E | F | E | A | A | B | D | B |
| Control Delay (Seconds) | 81.7 | 76.6 | 353.0 | 78.2 | 78.5 | 93.2 | 75.3 | 0.6 | 1.1 | 13.5 | 37.8 | 19.7 |
| **Intersection LOS** | **D - 53.7** | | | | | | | | | | | |
| 95th Percentile Queue (veh) | | | | | | | | | | | | |
| 2035 BUILD Conditions Volumes | 106 | 140 | 268 | 159 | 177 | 259 | 288 | 1,230 | 121 | 175 | 1,580 | 67 |
| V/C Ratio | 0.40 | 0.38 | 1.65 | 0.45 | 0.73 | 1.27 | 0.96 | 0.46 | 0.46 | 0.47 | 0.86 | 0.08 |
| Level-of-Service | F | E | F | E | F | F | F | A | A | B | D | C |
| Control Delay (Seconds) | 81.7 | 77.4 | 398.0 | 78.2 | 87.3 | 234.0 | 80.4 | 0.6 | 1.1 | 15.6 | 41.9 | 20.5 |
| **Intersection LOS** | **E - 67.6** | | | | | | | | | | | |
| 95th Percentile Queue (veh) | 4.7 | 6.0 | 36.6 | 6.9 | 14.3 | 29.6 | 20.3 | 0.3 | 0.6 | 6.0 | 42.1 | 2.8 |

MITIGATED Conditions (MITIGATED Geometry / Optimized Signal Timing / Phasing):

| 2: Cerrillos Rd / Herrera (Wellness Way) 2035 Conditions - MITIGATED | EB (Wellness Way) | | | WB (Wellness Way) | | | NB (Cerrillos Rd.) | | | SB (Cerrillos Rd.) | | |
|---|---|---|---|---|---|---|---|---|---|---|---|---|
| | L | T | R | L | T | R | L | T | R | L | T | R |
| Existing Lane Geometry | 2 | 2 | 1 | 2 | 1 | 1 | 1 | 3> | 0 | 1 | 2 | 1 |
| **AM Peak Hour** | | | | | | | | | | | | |
| 2035 NO BUILD Conditions Volumes | 154 | 133 | 216 | 108 | 148 | 76 | 322 | 1,371 | 169 | 96 | 872 | 78 |
| V/C Ratio | 0.58 | 0.29 | 0.55 | 0.30 | 0.51 | 0.20 | 0.92 | 0.68 | 0.68 | 0.35 | 0.62 | 0.12 |
| Level-of-Service | E | E | D | E | E | D | C | A | A | B | C | C |
| Control Delay (Seconds) | 73.6 | 62.1 | 50.4 | 66.6 | 61.8 | 46.3 | 33.0 | 1.1 | 2.1 | 17.9 | 34.7 | 25.2 |
| **Intersection LOS** | **C - 25.9** | | | | | | | | | | | |
| 95th Percentile Queue (veh) | 6.8 | 5.3 | 14.0 | 4.5 | 11.0 | 5.2 | 10.2 | 0.5 | 1.0 | 3.7 | 21.9 | 3.9 |
| 2035 BUILD Conditions Volumes | 154 | 168 | 246 | 108 | 162 | 128 | 322 | 1,388 | 169 | 195 | 935 | 78 |
| V/C Ratio | 0.58 | 0.35 | 0.61 | 0.30 | 0.54 | 0.51 | 0.95 | 0.69 | 0.70 | 0.71 | 0.67 | 0.13 |
| Level-of-Service | E | E | D | E | E | E | D | A | A | C | D | C |
| Control Delay (Seconds) | 74.5 | 62.4 | 51.8 | 66.6 | 62.4 | 61.6 | 39.4 | 1.1 | 2.2 | 22.1 | 37.2 | 26.0 |
| **Intersection LOS** | **C - 28.6** | | | | | | | | | | | |
| 95th Percentile Queue (veh) | 6.9 | 6.8 | 16.0 | 4.5 | 12.0 | 9.8 | 10.4 | 0.5 | 1.0 | 8.3 | 24.3 | 4.0 |
| **PM Peak Hour** | | | | | | | | | | | | |
| 2035 NO BUILD Conditions Volumes | 106 | 112 | 251 | 159 | 141 | 158 | 288 | 1,220 | 121 | 76 | 1,515 | 67 |
| V/C Ratio | 0.40 | 0.31 | 0.71 | 0.45 | 0.58 | 0.49 | 0.96 | 0.46 | 0.46 | 0.20 | 0.82 | 0.08 |
| Level-of-Service | F | E | E | E | E | E | E | A | A | B | D | B |
| Control Delay (Seconds) | 81.7 | 76.6 | 71.6 | 78.2 | 78.5 | 64.7 | 76.8 | 0.6 | 1.2 | 13.5 | 37.8 | 19.7 |
| **Intersection LOS** | **D - 36.0** | | | | | | | | | | | |
| 95th Percentile Queue (veh) | | | | | | | | | | | | |
| 2035 BUILD Conditions Volumes | 106 | 140 | 268 | 159 | 177 | 259 | 288 | 1,230 | 121 | 175 | 1,580 | 67 |
| V/C Ratio | 0.40 | 0.38 | 0.74 | 0.45 | 0.73 | 0.80 | 0.96 | 0.46 | 0.46 | 0.47 | 0.86 | 0.08 |
| Level-of-Service | F | E | E | E | F | F | F | A | A | B | D | C |
| Control Delay (Seconds) | 81.7 | 77.4 | 71.9 | 78.2 | 87.3 | 80.9 | 81.5 | 0.6 | 1.1 | 15.6 | 41.9 | 20.5 |
| **Intersection LOS** | **D - 39.9** | | | | | | | | | | | |
| 95th Percentile Queue (veh) | 4.7 | 6.0 | 19.1 | 6.9 | 14.3 | 19.5 | 20.5 | 0.3 | 0.6 | 6.0 | 42.1 | 2.8 |

Analysis of the intersection of CERRILLOS RD./ HERRERA DR. (WELLNESS WAY). demonstrates that the overall intersections delays will be acceptable for the 2025 and 2035, AM Peak Hour and PM Peak Hour conditions analyzed in this report. LOS intersection ratings for all conditions are “D” or better with the exception that the 2035 PM Peak Hour BUILD Condition is expected to encroach into LOS “E” if the recommended MITIGATE measures in the 5407 Beckner Rd. Development are not implemented.. Analysis assuming existing geometry / existing signal timing / phasing indicates that the intersection will operating at LOS “E” in the horizon year, but that assumes that the MITIGATION improvements will not be constructed by the 5407 Beckner Rd. Development considered in this Study. If the 5407 Beckner Rd. Development cannot be fiscally responsible to build their share of the recommended signal improvements, then it is assumed that their project did not move forward and, therefore, the trips from that particular development will not be generated as well. Analysis of the intersection of CERRILLOS RD. / HERRERA DR. (WELLNESS WAY) [assuming mitigated geometry / signal improvements (by others)] demonstrates that the intersection capacity is sufficient to accommodate the new trips

generated by Las Soleras, Tracts 18A & 18B and that the overall intersections levels-of-service are satisfactory for all conditions analyzed. For the MITIGATED conditions (by others), the operation of the signalized intersection of Beckner Rd. / Cerrillos Rd. will be at level-of-service "D" or better for the implementation year and marginally into level-of-service "D" for the horizon year conditions. Therefore, no recommendation is made for the signalized intersection of Beckner Rd. / Cerrillos Rd.

In summary, the impact of the proposed Las Soleras, Tracts 18A & 18B on this intersection were found to be negligible. Therefore, no recommendation is made related to the signalized intersection of Herrera Dr. (Wellness Way) / Cerrillos Rd.

*INTERSECTION #3 – Beckner Rd. / Richards Ave.*

The results of the analysis of the signalized intersection of BECKNER RD./ RICHARDS AVE. are summarized in the following tables:

Base Conditions (Existing Geometry / Optimized Signal Timing / Phasing):

| 3: Richards Ave. & Beckner Rd. 2022 / 2025 Conditions | EB (Beckner Rd.) | | | WB (Beckner Rd.) | | | NB (Richards Ave.) | | | SB (Richards Ave.) | | |
|---|---|---|---|---|---|---|---|---|---|---|---|---|
| | L | T | R | L | T | R | L | T | R | L | T | R |
| Existing Lane Geometry | 1 | 1 | 1 | 1 | 1> | 0 | 1 | 1> | 0 | 1 | 1 | 1 |
| **AM Peak Hour** | | | | | | | | | | | | |
| 2025 NO BUILD Conditions Volumes | 168 | 32 | 114 | 6 | 22 | 101 | 111 | 368 | 23 | 95 | 347 | 191 |
| V/C Ratio | 0.66 | 0.08 | 0.28 | 0.02 | 0.00 | 0.37 | 0.46 | 0.00 | 0.83 | 0.42 | 0.74 | 0.48 |
| Level-of-Service | C | B | B | B | A | B | B | A | C | B | C | B |
| Control Delay (Seconds) | 27.6 | 15.1 | 13.0 | 15.6 | 0.0 | 17.0 | 13.1 | 0.0 | 28.0 | 13.7 | 23.6 | 17.5 |
| **Intersection LOS** | **C - 21.6** | | | | | | | | | | | |
| 95th Percentile Queue (veh) | 6.1 | 0.7 | 2.3 | 0.1 | 0.0 | 3.1 | 2.1 | 0.0 | 12.9 | 1.8 | 10.8 | 5.4 |
| 2025 BUILD Conditions Volumes | 204 | 34 | 129 | 6 | 25 | 101 | 128 | 368 | 23 | 95 | 347 | 227 |
| V/C Ratio | 0.81 | 0.09 | 0.31 | 0.02 | 0.00 | 0.38 | 0.53 | 0.00 | 0.83 | 0.42 | 0.74 | 0.57 |
| Level-of-Service | D | B | B | B | A | B | B | A | C | B | C | B |
| Control Delay (Seconds) | 37.1 | 15.2 | 13.3 | 15.7 | 0.0 | 17.1 | 14.1 | 0.0 | 28.0 | 13.7 | 23.7 | 19.3 |
| **Intersection LOS** | **C - 22.9** | | | | | | | | | | | |
| 95th Percentile Queue (veh) | 8.8 | 0.8 | 2.7 | 0.1 | 0.0 | 3.2 | 2.5 | 0.0 | 12.9 | 1.8 | 10.8 | 6.9 |
| **PM Peak Hour** | | | | | | | | | | | | |
| 2025 NO BUILD Conditions Volumes | 178 | 9 | 107 | 1 | 9 | 4 | 125 | 337 | 1 | 10 | 371 | 277 |
| V/C Ratio | 0.52 | 0.03 | 0.28 | 0.00 | 0.00 | 0.04 | 0.24 | 0.00 | 0.33 | 0.02 | 0.41 | 0.36 |
| Level-of-Service | C | C | B | C | A | C | A | A | A | A | B | B |
| Control Delay (Seconds) | 25.1 | 20.6 | 18.6 | 20.7 | 0.0 | 20.6 | 6.5 | 0.0 | 7.9 | 7.2 | 10.7 | 10.4 |
| **Intersection LOS** | **B - 12.1** | | | | | | | | | | | |
| 95th Percentile Queue (veh) | 4.1 | 0.2 | 2.0 | 0.0 | 0.0 | 0.2 | 1.0 | 0.0 | 3.7 | 0.1 | 5.2 | 3.8 |
| 2025 BUILD Conditions Volumes | 225 | 12 | 124 | 1 | 12 | 4 | 140 | 337 | 1 | 10 | 371 | 323 |
| V/C Ratio | 0.58 | 0.03 | 0.28 | 0.00 | 0.00 | 0.04 | 0.30 | 0.00 | 0.36 | 0.02 | 0.45 | 0.46 |
| Level-of-Service | C | B | B | B | A | B | A | A | A | A | B | B |
| Control Delay (Seconds) | 24.2 | 18.8 | 17.0 | 19.0 | 0.0 | 18.9 | 7.7 | 0.0 | 9.3 | 8.4 | 12.5 | 13.0 |
| **Intersection LOS** | **B - 13.6** | | | | | | | | | | | |
| 95th Percentile Queue (veh) | 5.2 | 0.2 | 2.2 | 0.0 | 0.0 | 0.3 | 1.3 | 0.0 | 4.2 | 0.1 | 5.8 | 5.2 |

Base Conditions (Existing Geometry / Optimized Signal Timing / Phasing):

| 3: Richards Ave. & Beckner Rd. 2035 Conditions | EB (Beckner Rd.) | | | WB (Beckner Rd.) | | | NB (Richards Ave.) | | | SB (Richards Ave.) | | |
|---|---|---|---|---|---|---|---|---|---|---|---|---|
| | L | T | R | L | T | R | L | T | R | L | T | R |
| Existing Lane Geometry | 1 | 1 | 1 | 1 | 1> | 0 | 1 | 1> | 0 | 1 | 1 | 1 |
| **AM Peak Hour** | | | | | | | | | | | | |
| 2035 NO BUILD Conditions Volumes | 181 | 36 | 126 | 8 | 24 | 120 | 121 | 437 | 28 | 113 | 412 | 207 |
| V/C Ratio | 0.76 | 0.09 | 0.30 | 0.03 | 0.00 | 0.43 | 0.58 | 0.00 | 1.01 | 0.62 | 0.88 | 0.52 |
| Level-of-Service | C | B | B | B | A | B | B | A | F | B | C | B |
| Control Delay (Seconds) | 34.5 | 15.2 | 13.2 | 15.8 | 0.0 | 17.5 | 16.4 | 0.0 | 55.6 | 18.3 | 33.2 | 18.2 |
| **Intersection LOS** | **C - 32.2** | | | | | | | | | | | |
| 95th Percentile Queue (veh) | 7.7 | 0.8 | 2.6 | 0.2 | 0.0 | 3.7 | 2.6 | 0.0 | 21.3 | 2.6 | 14.7 | 6.0 |
| 2035 BUILD Conditions Volumes | 217 | 38 | 141 | 8 | 27 | 120 | 138 | 437 | 28 | 113 | 412 | 243 |
| V/C Ratio | 0.92 | 0.10 | 0.34 | 0.03 | 0.00 | 0.44 | 0.67 | 0.00 | 1.01 | 0.62 | 0.88 | 0.61 |
| Level-of-Service | E | B | B | B | A | B | B | A | F | B | C | C |
| Control Delay (Seconds) | 55.8 | 15.2 | 13.5 | 15.8 | 0.0 | 17.6 | 19.3 | 0.0 | 55.6 | 18.3 | 33.2 | 20.3 |
| **Intersection LOS** | **C - 34.6** | | | | | | | | | | | |
| 95th Percentile Queue (veh) | 11.4 | 0.9 | 3.0 | 0.2 | 0.0 | 3.8 | 3.3 | 0.0 | 21.3 | 2.6 | 14.7 | 7.6 |
| **PM Peak Hour** | | | | | | | | | | | | |
| 2035 NO BUILD Conditions Volumes | 193 | 10 | 119 | 1 | 10 | 5 | 133 | 401 | 1 | 11 | 441 | 295 |
| V/C Ratio | 0.54 | 0.03 | 0.30 | 0.00 | 0.00 | 0.05 | 0.29 | 0.00 | 0.41 | 0.02 | 0.50 | 0.40 |
| Level-of-Service | C | B | B | C | A | C | A | A | A | A | B | B |
| Control Delay (Seconds) | 24.8 | 19.9 | 18.1 | 20.0 | 0.0 | 20.0 | 7.4 | 0.0 | 9.1 | 7.7 | 12.4 | 11.3 |
| **Intersection LOS** | **B - 13.0** | | | | | | | | | | | |
| 95th Percentile Queue (veh) | | | | | | | | | | | | |
| 2035 BUILD Conditions Volumes | 240 | 13 | 136 | 1 | 13 | 5 | 148 | 401 | 1 | 11 | 441 | 341 |
| V/C Ratio | 0.60 | 0.03 | 0.30 | 0.00 | 0.00 | 0.05 | 0.35 | 0.00 | 0.44 | 0.02 | 0.55 | 0.50 |
| Level-of-Service | C | B | B | B | A | B | A | A | B | A | B | B |
| Control Delay (Seconds) | 23.9 | 18.3 | 16.5 | 18.4 | 0.0 | 18.3 | 8.9 | 0.0 | 10.6 | 8.9 | 14.6 | 14.2 |
| **Intersection LOS** | **B - 14.6** | | | | | | | | | | | |
| 95th Percentile Queue (veh) | 5.5 | 0.2 | 2.3 | 0.0 | 0.0 | 0.3 | 1.5 | 0.0 | 5.6 | 0.1 | 7.7 | 5.9 |

The intersection of Beckner Rd. / Richards Ave. is currently an unsignalized intersection. Recent development activity has made the intersection more and more congested. A signal warrant analysis was prepared by Santa Fe Engineering Consultants, LLC (March 2020) which found that a new traffic signal was warranted at the intersection. Subsequently, the City hired Santa Fe Engineering Consultants, LLC to design a temporary traffic signal at the intersection. The construction plans were recently put out to bid and a construction contract was recently awarded to a company to construct the new temporary traffic signal. The signal is expected to be implement within the new few months or so.

The analysis of the intersection of BECKNER RD. / RICHARDS AVE. demonstrates that the delays will be acceptable for the 2025 and 2035 AM Peak Hour and PM Peak Hour conditions analyzed in this report. LOS intersection ratings for all conditions are “C” or better which meets the New Mexico Department of Transportation’s Minimum Acceptable Level of Service Standard of “D” for an urban principal arterial. Also, increases in delays attributed to the increased traffic

from the project are insignificant. Therefore, no recommendation is made for the intersection of Beckner Rd. / Richards Ave.

*INTERSECTION #4 – Beckner Rd. / Wellness Way*

The results of the analysis of the unsignalized roundabout intersection of BECKNER RD. / WELLNESS WAY. are summarized in the following tables:

| 4: Beckner Rd. & Wellness Way 2022 / 2025 Conditions | EB (Beckner Rd.) | | | WB (Beckner Rd.) | | | SB (Wellness Way) | | |
|---|---|---|---|---|---|---|---|---|---|
| | L | T | R | L | T | R | L | T | R |
| Existing Lane Geometry | 0 | <2 | | | 2> | 0 | 1> | | 0 |
| 2025 NO BUILD Conditions Volumes | 33 | 374 | | | 205 | 101 | 134 | | 56 |
| V/C Ratio | 0.24 | 0.25 | | | 0.16 | 0.17 | 0.24 | | |
| Level-of-Service | A | A | | | A | A | A | | |
| Control Delay (Seconds) | 5.5 | 5.3 | | | 4.2 | 4.1 | 5.6 | | |
| **Intersection LOS** | **ROUNDABOUT - A - 5.0** | | | | | | | | |
| 95th Percentile Queue (veh) | 1.0 | 1.0 | | | 1.0 | 1.0 | 1.0 | | |
| 2025 BUILD Conditions Volumes | 33 | 476 | | | 284 | 201 | 263 | | 56 |
| V/C Ratio | 0.35 | 0.37 | | | 0.25 | 0.26 | 0.45 | | |
| Level-of-Service | A | A | | | A | A | A | | |
| Control Delay (Seconds) | 7.7 | 7.5 | | | 5.0 | 5.0 | 8.8 | | |
| **Intersection LOS** | **ROUNDABOUT - A - 6.9** | | | | | | | | |
| 95th Percentile Queue (veh) | 2.0 | 2.0 | | | 1.0 | 1.0 | 2.0 | | |

| PM Peak Hour | | | | | | | | | |
|---|---|---|---|---|---|---|---|---|---|
| 2025 NO BUILD Conditions Volumes | 35 | 224 | | | 291 | 170 | 120 | | 150 |
| V/C Ratio | 0.12 | 0.13 | | | 0.19 | 0.21 | 0.29 | | |
| Level-of-Service | A | A | | | A | A | A | | |
| Control Delay (Seconds) | 4.1 | 4.0 | | | 4.5 | 4.4 | 6.3 | | |
| **Intersection LOS** | **ROUNDABOUT - A - 4.8** | | | | | | | | |
| 95th Percentile Queue (veh) | 0.0 | 0.0 | | | 1.0 | 1.0 | 1.0 | | |
| 2025 BUILD Conditions Volumes | 35 | 329 | | | 422 | 327 | 246 | | 150 |
| V/C Ratio | 0.19 | 0.20 | | | 0.31 | 0.34 | 0.49 | | |
| Level-of-Service | A | A | | | A | A | B | | |
| Control Delay (Seconds) | 5.3 | 5.1 | | | 5.7 | 5.7 | 10.1 | | |
| **Intersection LOS** | **ROUNDABOUT - A - 6.7** | | | | | | | | |
| 95th Percentile Queue (veh) | 0.2 | | | | | | 23.8 | | |

| 4: Beckner Rd. & Wellness Way<br>2035 Conditions | EB (Beckner Rd.) | | | WB (Beckner Rd.) | | | SB (Wellness Way) | | |
|---|---|---|---|---|---|---|---|---|---|
| | L | T | R | L | T | R | L | T | R |
| Existing Lane Geometry | 0 | <2 | | | 2> | 0 | 1> | | 0 |
| **AM Peak Hour** | | | | | | | | | |
| 2035 NO BUILD Conditions Volumes | 38 | 401 | | | 219 | 113 | 142 | | 57 |
| V/C Ratio | 0.26 | 0.28 | | | 0.17 | 0.18 | 0.26 | | |
| Level-of-Service | A | A | | | A | A | A | | |
| Control Delay (Seconds) | 5.7 | 5.6 | | | 4.3 | 4.2 | 5.8 | | |
| **Intersection LOS** | **ROUNDABOUT - A - 5.2** | | | | | | | | |
| 95th Percentile Queue (veh) | 1.0 | 1.0 | | | 1.0 | 1.0 | 1.0 | | |
| 2035 BUILD Conditions Volumes | 38 | 503 | | | 298 | 213 | 271 | | 57 |
| V/C Ratio | 0.38 | 0.40 | | | 0.27 | 0.28 | 0.47 | | |
| Level-of-Service | A | A | | | A | A | A | | |
| Control Delay (Seconds) | 8.1 | 7.9 | | | 5.2 | 5.2 | 9.3 | | |
| **Intersection LOS** | **ROUNDABOUT - A - 7.3** | | | | | | | | |
| 95th Percentile Queue (veh) | 2.0 | 2.0 | | | 1.0 | 1.0 | 3.0 | | |

| **PM Peak Hour** | | | | | | | | | |
|---|---|---|---|---|---|---|---|---|---|
| 2035 NO BUILD Conditions Volumes | 38 | 237 | | | 308 | 180 | 131 | | 170 |
| V/C Ratio | 0.13 | 0.14 | | | 0.21 | 0.22 | 0.33 | | |
| Level-of-Service | A | A | | | A | A | A | | |
| Control Delay (Seconds) | 4.2 | 4.1 | | | 4.6 | 4.5 | 6.9 | | |
| **Intersection LOS** | **ROUNDABOUT - A - 5.1** | | | | | | | | |
| 95th Percentile Queue (veh) | 0.0 | 0.0 | | | 1.0 | 1.0 | 1.0 | | |
| 2035 BUILD Conditions Volumes | 38 | 342 | | | 439 | 337 | 257 | | 170 |
| V/C Ratio | 0.20 | 0.21 | | | 0.33 | 0.35 | 0.54 | | |
| Level-of-Service | A | A | | | A | A | B | | |
| Control Delay (Seconds) | 5.5 | 5.3 | | | 5.8 | 5.9 | 11.2 | | |
| **Intersection LOS** | **ROUNDABOUT - A - 7.2** | | | | | | | | |
| 95th Percentile Queue (veh) | 1.0 | 1.0 | | | 1.0 | 2.0 | 3.0 | | |

The analysis of the roundabout intersection of BECKNER RD. / WELLNESS WAY. demonstrates that the delays will be acceptable for the 2025 and 2035 AM Peak Hour and PM Peak Hour conditions analyzed in this report. LOS ratings for all conditions are “A” which exceeds the New Mexico Department of Transportation’s Minimum Acceptable Level of Service Standard of ‘D’ for an urban collector. Also, increases in delays attributed to the increased traffic from the project are insignificant. Therefore, there are no recommendations for the existing roundabout at Beckner Rd. / Wellness Way.

Note that 2022 conditions analysis are calculated in this report and can be found in the Appendix. However, the results were not reported above since everything in 2025 and 2035 was virtually LOS “A”. It can be concluded that the 2022 analysis would yield LOS “A” as well.

*INTERSECTION #5 – Beckner Rd./ Las Soleras Dr.*

The results of the analysis of the signalized roundabout intersection of BECKNER RD. / LAS SOLERAS DR. are summarized in the following tables:

| 5: Las Soleras Dr. & Beckner Rd. 2022 / 2025 Conditions | EB (Beckner Rd.) | | | WB (Beckner Rd.) | | | NB (Las Soleras Dr.) | | | SB (Las Soleras Dr.) | | |
|---|---|---|---|---|---|---|---|---|---|---|---|---|
| | L | T | R | L | T | R | L | T | R | L | T | R |
| Existing Lane Geometry | 0 | <2> | 0 | 0 | <2> | 0 | 0 | <1> | 0 | 0 | <1> | 0 |
| **AM Peak Hour** | | | | | | | | | | | | |
| 2025 NO BUILD Conditions Volumes | 7 | 404 | 9 | 29* | 287 | 1 | 16 | 0 | 4 | 8 | 44 | 10 |
| V/C Ratio | 0.19 | 0.20 | | | 0.13 | 0.14 | | 0.03 | | | 0.07 | |
| Level-of-Service | A | A | | | A | A | | A | | | A | |
| Control Delay (Seconds) | 4.6 | 4.5 | | | 3.9 | 3.8 | | 4.2 | | | 4.2 | |
| **Intersection LOS** | **ROUNDABOUT - A - 4.2** | | | | | | | | | | | |
| 95th Percentile Queue (veh) | 1.0 | 1.0 | | | 0.0 | 0.0 | | 0.0 | | | 0.0 | |
| 2025 BUILD Conditions Volumes | 7 | 633 | 9 | 29* | 457 | 2 | 16 | 0 | 4 | 9 | 44 | 10 |
| V/C Ratio | 0.29 | 0.31 | | | 0.20 | 0.22 | | 0.03 | | | 0.09 | |
| Level-of-Service | A | A | | | A | A | | A | | | A | |
| Control Delay (Seconds) | 5.6 | 5.6 | | | 4.5 | 4.5 | | 5.3 | | | 5.0 | |
| **Intersection LOS** | **ROUNDABOUT - A - 5.1** | | | | | | | | | | | |
| 95th Percentile Queue (veh) | 1.0 | 1.0 | | | 1.0 | 1.0 | | 0.0 | | | 0.0 | |

* - WB Left Turns include U-Turns

| **PM Peak Hour** | | | | | | | | | | | | |
|---|---|---|---|---|---|---|---|---|---|---|---|---|
| 2025 NO BUILD Conditions Volumes | 16 | 302 | 44 | 20* | 354 | 11 | 60 | 1 | 12 | 11 | 20 | 10 |
| V/C Ratio | 0.22 | 0.23 | | | 0.24 | 0.25 | | 0.13 | | | 0.12 | |
| Level-of-Service | A | A | | | A | A | | A | | | A | |
| Control Delay (Seconds) | 4.8 | 4.8 | | | 5.2 | 5.1 | | 5.4 | | | 5.8 | |
| **Intersection LOS** | **ROUNDABOUT - A - 5.1** | | | | | | | | | | | |
| 95th Percentile Queue (veh) | 1.0 | 1.0 | | | 1.0 | 1.0 | | 0.0 | | | 0.0 | |
| 2025 BUILD Conditions Volumes | 16 | 533 | 44 | 20* | 596 | 11 | 60 | 1 | 12 | 11 | 20 | 10 |
| V/C Ratio | 0.36 | 0.38 | | | 0.39 | 0.42 | | 0.18 | | | 0.16 | |
| Level-of-Service | A | A | | | A | A | | A | | | A | |
| Control Delay (Seconds) | 6.3 | 6.3 | | | 7.0 | 7.0 | | 7.8 | | | 8.5 | |
| **Intersection LOS** | **ROUNDABOUT - A - 6.8** | | | | | | | | | | | |
| 95th Percentile Queue (veh) | 2.0 | 2.0 | | | 2.0 | 2.0 | | 1.0 | | | 1.0 | |

| 5: Las Soleras Dr. & Beckner Rd. 2035 Conditions | EB (Beckner Rd.) | | | WB (Beckner Rd.) | | | NB (Las Soleras Dr.) | | | SB (Las Soleras Dr.) | | |
|---|---|---|---|---|---|---|---|---|---|---|---|---|
| | L | T | R | L | T | R | L | T | R | L | T | R |
| Existing Lane Geometry | 0 | <2> | 0 | 0 | <2> | 0 | 0 | <1> | 0 | 0 | <1> | 0 |
| **AM Peak Hour** | | | | | | | | | | | | |
| 2035 NO BUILD Conditions Volumes | 8 | 434 | 9 | 29 | 315 | 1 | 16 | 0 | 4 | 8 | 44 | 11 |
| V/C Ratio | 0.20 | 0.21 | | | 0.14 | 0.15 | | 0.03 | | | 0.07 | |
| Level-of-Service | A | A | | | A | A | | A | | | A | |
| Control Delay (Seconds) | 4.7 | 4.6 | | | 4.0 | 3.9 | | 4.3 | | | 4.3 | |
| **Intersection LOS** | **ROUNDABOUT - A - 4.3** | | | | | | | | | | | |
| 95th Percentile Queue (veh) | 1.0 | 1.0 | | | 1.0 | 1.0 | | 0.0 | | | 0.0 | |
| 2035 BUILD Conditions Volumes | 8 | 663 | 9 | 29 | 485 | 2 | 16 | 0 | 4 | 9 | 44 | 11 |
| V/C Ratio | 0.30 | 0.32 | | | 0.22 | 0.23 | | 0.03 | | | 0.09 | |
| Level-of-Service | A | A | | | A | A | | A | | | A | |
| Control Delay (Seconds) | 5.8 | 5.7 | | | 4.6 | 4.6 | | 5.4 | | | 5.2 | |
| **Intersection LOS** | **ROUNDABOUT - A - 5.3** | | | | | | | | | | | |
| 95th Percentile Queue (veh) | 1.0 | 1.0 | | | 1.0 | 1.0 | | 0.0 | | | 0.0 | |
| **PM Peak Hour** | | | | | | | | | | | | |
| 2035 NO BUILD Conditions Volumes | 18 | 328 | 44 | 20 | 373 | 13 | 60 | 1 | 12 | 13 | 20 | 11 |
| V/C Ratio | 0.24 | 0.25 | | | 0.25 | 0.27 | | 0.14 | | | 0.13 | |
| Level-of-Service | A | A | | | A | A | | A | | | A | |
| Control Delay (Seconds) | 5.0 | 4.9 | | | 5.4 | 5.3 | | 5.7 | | | 6.1 | |
| **Intersection LOS** | **ROUNDABOUT - A - 5.3** | | | | | | | | | | | |
| 95th Percentile Queue (veh) | 1.0 | 1.0 | | | 1.0 | 1.0 | | 0.0 | | | 0.0 | |
| 2035 BUILD Conditions Volumes | 18 | 559 | 44 | 20 | 615 | 13 | 60 | 1 | 12 | 13 | 20 | 11 |
| V/C Ratio | 0.38 | 0.40 | | | 0.41 | 0.44 | | 0.19 | | | 0.18 | |
| Level-of-Service | A | A | | | A | A | | A | | | A | |
| Control Delay (Seconds) | 6.6 | 6.6 | | | 7.2 | 7.2 | | 8.1 | | | 9.1 | |
| **Intersection LOS** | **ROUNDABOUT - A - 7.1** | | | | | | | | | | | |
| 95th Percentile Queue (veh) | 2.0 | 2.0 | | | 2.0 | 2.0 | | 1.0 | | | 1.0 | |

The analysis of the roundabout intersection of BECKNER RD. / LAS SOLERAS DR.. demonstrates that the delays will be acceptable for the 2025 and 2035 AM Peak Hour and PM Peak Hour conditions analyzed in this report. LOS ratings for all conditions are “A” which exceeds the New Mexico Department of Transportation’s Minimum Acceptable Level of Service Standard of ‘D’ for an urban collector. Also, increases in delays attributed to the increased traffic from the project are insignificant. Therefore, there are no recommendations for the existing roundabout at Beckner Rd. / Las Soleras Dr.

Note that 2022 conditions analysis are calculated in this report and can be found in the Appendix. However, the results were not reported above since everything in 2025 and 2035 was virtually LOS “A”. It can be concluded that the 2022 analysis would yield LOS “A” as well.

*INTERSECTION #6 – Beckner Rd./ Rail Runner Rd..*

The results of the analysis of the signalized roundabout intersection of BECKNER RD. / RAIL RUNNER RD. are summarized in the following tables:

| 6: Beckner Rd. & Rail Runner Rd. 2022 / 2025 Conditions | EB (Beckner Rd.) | | | WB (Beckner Rd.) | | | SB (Rail Runner Rd.) | | |
|---|---|---|---|---|---|---|---|---|---|
| | L | T | R | L | T | R | L | T | R |
| Existing Lane Geometry | 0 | <1 | | | 1> | 0 | 1> | | 0 |
| 2025 NO BUILD Conditions Volumes | 50 | 353 | | | 237 | 70 | 35 | | 49 |
| V/C Ratio | | 0.40 | | | 0.31 | | | 0.11 | |
| Level-of-Service | | A | | | A | | | A | |
| Control Delay (Seconds) | | 6.6 | | | 5.7 | | | 4.6 | |
| **Intersection LOS** | **ROUNDABOUT - A - 6.1** | | | | | | | | |
| 95th Percentile Queue (veh) | 2.0 | | | | 1.0 | | 0.0 | | |
| 2025 BUILD Conditions Volumes | 50 | 583 | | | 417 | 93 | 58 | | 49 |
| V/C Ratio | | 0.65 | | | 0.52 | | | 0.18 | |
| Level-of-Service | | B | | | A | | | A | |
| Control Delay (Seconds) | | 11.2 | | | 8.4 | | | 6.5 | |
| **Intersection LOS** | **ROUNDABOUT - A - 9.7** | | | | | | | | |
| 95th Percentile Queue (veh) | | 5.0 | | | 3.0 | | | 1.0 | |

| **PM Peak Hour** | | | | | | | | | |
|---|---|---|---|---|---|---|---|---|---|
| 2025 NO BUILD Conditions Volumes | 42 | 253 | | | 350 | 51 | 33 | | 47 |
| V/C Ratio | | 0.27 | | | 0.37 | | | 0.11 | |
| Level-of-Service | | A | | | A | | | A | |
| Control Delay (Seconds) | | 5.1 | | | 6.2 | | | 5.1 | |
| **Intersection LOS** | **ROUNDABOUT - A - 5.7** | | | | | | | | |
| 95th Percentile Queue (veh) | | 1.0 | | | 2.0 | | | 0.0 | |
| 2025 BUILD Conditions Volumes | 42 | 484 | | | 638 | 74 | 57 | | 47 |
| V/C Ratio | | 0.49 | | | 0.65 | | | 0.20 | |
| Level-of-Service | | A | | | B | | | A | |
| Control Delay (Seconds) | | 8.0 | | | 11.1 | | | 8.2 | |
| **Intersection LOS** | **ROUNDABOUT - A - 9.7** | | | | | | | | |
| 95th Percentile Queue (veh) | | 3.0 | | | 5.0 | | | 1.0 | |

| 6: Beckner Rd. & Rail Runner Rd. 2035 Conditions | EB (Beckner Rd.) | | | WB (Beckner Rd.) | | | SB (Rail Runner Rd.) | | |
|---|---|---|---|---|---|---|---|---|---|
| | L | T | R | L | T | R | L | T | R |
| Existing Lane Geometry | 0 | <1 | | | 1> | 0 | 1> | | 0 |
| **AM Peak Hour** | | | | | | | | | |
| 2035 NO BUILD Conditions Volumes | 55 | 378 | | | 259 | 82 | 38 | | 55 |
| V/C Ratio | | 0.43 | | | 0.35 | | | 0.13 | |
| Level-of-Service | | A | | | A | | | A | |
| Control Delay (Seconds) | | 7.1 | | | 6.1 | | | 4.9 | |
| **Intersection LOS** | **ROUNDABOUT - A - 6.5** | | | | | | | | |
| 95th Percentile Queue (veh) | | 2.0 | | | 2.0 | | | 0.0 | |
| 2035 BUILD Conditions Volumes | 55 | 608 | | | 439 | 105 | 61 | | 55 |
| V/C Ratio | | 0.68 | | | 0.56 | | | 0.20 | |
| Level-of-Service | | B | | | A | | | A | |
| Control Delay (Seconds) | | 12.2 | | | 9.2 | | | 6.9 | |
| **Intersection LOS** | **ROUNDABOUT - B - 10.5** | | | | | | | | |
| 95th Percentile Queue (veh) | | 6.0 | | | 4.0 | | | 1.0 | |

| **PM Peak Hour** | | | | | | | | | |
|---|---|---|---|---|---|---|---|---|---|
| 2035 NO BUILD Conditions Volumes | 45 | 278 | | | 368 | 57 | 37 | | 51 |
| V/C Ratio | | 0.29 | | | 0.39 | | | 0.12 | |
| Level-of-Service | | A | | | A | | | A | |
| Control Delay (Seconds) | | 5.4 | | | 6.6 | | | 5.3 | |
| **Intersection LOS** | **ROUNDABOUT - A - 6.0** | | | | | | | | |
| 95th Percentile Queue (veh) | | 1.0 | | | 2.0 | | | 0.0 | |
| 2035 BUILD Conditions Volumes | 45 | 509 | | | 656 | 80 | 61 | | 51 |
| V/C Ratio | | 0.52 | | | 0.68 | | | 0.22 | |
| Level-of-Service | | A | | | B | | | A | |
| Control Delay (Seconds) | | 8.5 | | | 11.8 | | | 8.6 | |
| **Intersection LOS** | **ROUNDABOUT - B - 10.3** | | | | | | | | |
| 95th Percentile Queue (veh) | | 3.0 | | | 6.0 | | | 1.0 | |

The analysis of the roundabout intersection of BECKNER RD. / RAIL RUNNER RD.. demonstrates that the delays will be acceptable for the 2025 and 2035 AM Peak Hour and PM Peak Hour conditions analyzed in this report. LOS ratings for all conditions are “A” or “B” which exceeds the New Mexico Department of Transportation’s Minimum Acceptable Level of Service Standard of ‘D’ for an urban collector. Also, increases in delays attributed to the increased traffic from the project are insignificant. Therefore, there are no recommendations for the existing roundabout at Beckner Rd. / Rail Runner Rd.

Note that 2022 conditions analysis are calculated in this report and can be found in the Appendix. However, the results were not reported above since everything in 2025 and 2035 NO BUILD conditions was virtually LOS “A”. It can be concluded that the 2022 analysis would yield LOS “A” as well.

INTERSECTION #7 – Walking Rain Rd.

The results of the analysis of the signalized roundabout intersection of BECKNER RD. / WALKING RAIN RD. are summarized in the following tables:

| 7: Walking Rain & Beckner Rd. 2022 / 2025 Conditions | EB (Beckner Rd.) | | | WB (Beckner Rd.) | | | NB (Walking Rain Rd.) | | | SB (Walking Rain Rd.) | | |
|---|---|---|---|---|---|---|---|---|---|---|---|---|
| | L | T | R | L | T | R | L | T | R | L | T | R |
| Existing Lane Geometry | 0 | <1> | 0 | 0 | <1> | 0 | 0 | <1> | 0 | 0 | <1> | 0 |
| **AM Peak Hour** | | | | | | | | | | | | |
| 2022 Existing Conditions Volumes | 18 | 79 | 0 | 0 | 102 | 22 | 0 | 0 | 0 | 45 | 0 | 29 |
| V/C Ratio | | 0.08 | | | 0.10 | | | 0.00 | | | 0.07 | |
| Level-of-Service | | A | | | A | | | A | | | A | |
| Control Delay (Seconds) | | 3.4 | | | 3.5 | | | 3.1 | | | 3.5 | |
| **Intersection LOS** | **ROUNDABOUT - A - 3.5** | | | | | | | | | | | |
| 95th Percentile Queue (veh) | | 0.0 | | | 0.0 | | | 0.0 | | | 0.0 | |
| 2025 NO BUILD Conditions Volumes | 19 | 237 | 140 | 68 | 218 | 23 | 33 | 3 | 8 | 49 | 16 | 30 |
| V/C Ratio | | 0.37 | | | 0.26 | | | 0.05 | | | 0.11 | |
| Level-of-Service | | A | | | A | | | A | | | A | |
| Control Delay (Seconds) | | 6.7 | | | 5.1 | | | 4.2 | | | 4.8 | |
| **Intersection LOS** | **ROUNDABOUT - A - 5.8** | | | | | | | | | | | |
| 95th Percentile Queue (veh) | | 2.0 | | | 1.0 | | | 0.0 | | | 0.0 | |
| 2025 BUILD Conditions Volumes | 19 | 331 | 300 | 115 | 315 | 24 | 139 | 4 | 32 | 50 | 16 | 30 |
| V/C Ratio | | 0.63 | | | 0.43 | | | 0.22 | | | 0.14 | |
| Level-of-Service | | B | | | A | | | A | | | A | |
| Control Delay (Seconds) | | 11.8 | | | 7.8 | | | 6.4 | | | 6.6 | |
| **Intersection LOS** | **ROUNDABOUT - A - 9.4** | | | | | | | | | | | |
| 95th Percentile Queue (veh) | 0.1 | | | 0.5 | | | | 11.8 | | | 3.2 | |

| **PM Peak Hour** | | | | | | | | | | | | |
|---|---|---|---|---|---|---|---|---|---|---|---|---|
| 2022 Existing Conditions Volumes | 30 | 114 | 0 | 0 | 93 | 36 | 0 | 0 | 0 | 28 | 0 | 17 |
| V/C Ratio | | 0.12 | | | 0.10 | | | 0.00 | | | 0.04 | |
| Level-of-Service | | A | | | A | | | A | | | A | |
| Control Delay (Seconds) | | 3.7 | | | 3.6 | | | 3.2 | | | 3.3 | |
| **Intersection LOS** | **ROUNDABOUT - A - 3.6** | | | | | | | | | | | |
| 95th Percentile Queue (veh) | 0.1 | | | 0.0 | | | | | | | 0.2 | |
| 2025 NO BUILD Conditions Volumes | 31 | 224 | 69 | 29 | 268 | 37 | 175 | 21 | 13 | 30 | 8 | 18 |
| V/C Ratio | | 0.27 | | | 0.34 | | | 0.22 | | | 0.07 | |
| Level-of-Service | | A | | | A | | | A | | | A | |
| Control Delay (Seconds) | | 5.3 | | | 6.8 | | | 5.8 | | | 5.2 | |
| **Intersection LOS** | **ROUNDABOUT - A - 5.9** | | | | | | | | | | | |
| 95th Percentile Queue (veh) | | 1.0 | | | 1.0 | | | 1.0 | | | 0.0 | |
| 2025 BUILD Conditions Volumes | 31 | 393 | 156 | 55 | 349 | 38 | 407 | 23 | 47 | 32 | 8 | 18 |
| V/C Ratio | | 0.50 | | | 0.57 | | | 0.61 | | | 0.11 | |
| Level-of-Service | | A | | | B | | | B | | | A | |
| Control Delay (Seconds) | | 8.4 | | | 12.9 | | | 14.1 | | | 7.8 | |
| **Intersection LOS** | **ROUNDABOUT - B - 11.4** | | | | | | | | | | | |
| 95th Percentile Queue (veh) | 0.1 | | | 0.2 | | | | 44.4 | | | 1.3 | |

| 7: Walking Rain & Beckner Rd. 2035 Conditions | EB (Beckner Rd.) | | | WB (Beckner Rd.) | | | NB (Walking Rain Rd.) | | | SB (Walking Rain Rd.) | | |
|---|---|---|---|---|---|---|---|---|---|---|---|---|
| | L | T | R | L | T | R | L | T | R | L | T | R |
| Existing Lane Geometry | 0 | <1> | 0 | 0 | <1> | 0 | 0 | <1> | 0 | 0 | <1> | 0 |
| **AM Peak Hour** | | | | | | | | | | | | |
| 2035 NO BUILD Conditions Volumes | 23 | 252 | 140 | 68 | 238 | 28 | 33 | 3 | 8 | 57 | 16 | 35 |
| V/C Ratio | | 0.39 | | | 0.28 | | | 0.05 | | | 0.13 | |
| Level-of-Service | | A | | | A | | | A | | | A | |
| Control Delay (Seconds) | | 7.0 | | | 5.4 | | | 4.3 | | | 5.1 | |
| **Intersection LOS** | **ROUNDABOUT - A - 6.0** | | | | | | | | | | | |
| 95th Percentile Queue (veh) | | 2.0 | | | 1.0 | | | 0.0 | | | 0.0 | |
| 2035 BUILD Conditions Volumes | 23 | 346 | 300 | 115 | 335 | 29 | 139 | 4 | 32 | 58 | 16 | 35 |
| V/C Ratio | | 0.66 | | | 0.46 | | | 0.22 | | | 0.17 | |
| Level-of-Service | | B | | | A | | | A | | | A | |
| Control Delay (Seconds) | | 12.6 | | | 8.2 | | | 6.6 | | | 7.0 | |
| **Intersection LOS** | **ROUNDABOUT - A - 10.0** | | | | | | | | | | | |
| 95th Percentile Queue (veh) | | 5.0 | | | 2.0 | | | 1.0 | | | 1.0 | |
| **PM Peak Hour** | | | | | | | | | | | | |
| 2035 NO BUILD Conditions Volumes | 37 | 246 | 69 | 29 | 287 | 44 | 175 | 21 | 13 | 35 | 8 | 21 |
| V/C Ratio | | 0.30 | | | 0.36 | | | 0.23 | | | 0.08 | |
| Level-of-Service | | A | | | A | | | A | | | A | |
| Control Delay (Seconds) | | 5.6 | | | 7.2 | | | 6.0 | | | 5.4 | |
| **Intersection LOS** | **ROUNDABOUT - A - 6.3** | | | | | | | | | | | |
| 95th Percentile Queue (veh) | | 1.0 | | | 2.0 | | | 1.0 | | | 0.0 | |
| 2035 BUILD Conditions Volumes | 37 | 415 | 156 | 55 | 368 | 45 | 407 | 23 | 47 | 37 | 8 | 21 |
| V/C Ratio | | 0.53 | | | 0.61 | | | 0.63 | | | 0.13 | |
| Level-of-Service | | A | | | B | | | C | | | A | |
| Control Delay (Seconds) | | 8.9 | | | 14.1 | | | 15.2 | | | 8.2 | |
| **Intersection LOS** | **ROUNDABOUT - B - 12.2** | | | | | | | | | | | |
| 95th Percentile Queue (veh) | | 3.0 | | | 4.0 | | | 5.0 | | | 0.0 | |

The analysis of the roundabout intersection of BECKNER RD. / WALKING RAIN RD. demonstrates that the delays will be acceptable for the 2025 and 2035 AM Peak Hour and PM Peak Hour conditions analyzed in this report. LOS ratings for all conditions are “A” or “B” which exceeds the New Mexico Department of Transportation’s Minimum Acceptable Level of Service Standard of ‘D’ for an urban collector. The impact of the proposed Las Soleras, Tracts 18A & 18B Development are most significant at this intersection. However, it has been demonstrated that the operation of the roundabout at Beckner Rd. / Walking Rain Rd. are projected to be satisfactory for all conditions analyzed in this Study. Therefore, there are no recommendations for the existing roundabout at Beckner Rd. / Rail Runner Rd.

.

INTERSECTION #8 – Beckner Rd. / Driveway “A”

The results of the analysis of the unsignalized driveway (right-in, right-out only) of BECKNER RD. / DRIVEWAY “A” are summarized in the following tables:

| 8: Driveway "A" & Beckner Rd. 2025 Conditions | EB (Beckner Rd.) | | | WB (Beckner Rd.) | | | NB (Driveway "A") | | |
|---|---|---|---|---|---|---|---|---|---|
| | L | T | R | L | T | R | L | T | R |
| Existing Lane Geometry | | 1 | 1 | 0 | 1 | | 0 | | 1 |
| **AM Peak Hour** | | | | | | | | | |
| 2025 NO BUILD Conditions Volumes | | 272 | 21 | 0 | 309 | | 0 | | 19 |
| V/C Ratio | | | | | | | | | 0.03 |
| Level-of-Service | | | | | | | | | B |
| Control Delay (Seconds) | | | | | | | | | 10.0 |
| **Intersection LOS** | **TWSC** | | | | | | | | |
| 95th Percentile Queue (veh) | | | | | | | | | 0.1 |
| Mitigated Conditions | | 1 | 1 | 0 | 1 | | 0 | | 1 |
| 2025 BUILD Conditions Volumes | | 311 | 82 | 0 | 454 | | 0 | | 21 |
| V/C Ratio | | | | | | | | | 0.03 |
| Level-of-Service | | | | | | | | | B |
| Control Delay (Seconds) | | | | | | | | | 10.3 |
| **Intersection LOS** | **TWSC** | | | | | | | | |
| 95th Percentile Queue (veh) | | | | | | | | | 0.1 |

| **PM Peak Hour** | | | | | | | | | |
|---|---|---|---|---|---|---|---|---|---|
| 2025 NO BUILD Conditions Volumes | | 254 | 12 | 0 | 335 | | 0 | | 52 |
| V/C Ratio | | | | | | | | | 0.08 |
| Level-of-Service | | | | | | | | | B |
| Control Delay (Seconds) | | | | | | | | | 10.1 |
| **Intersection LOS** | **TWSC** | | | | | | | | |
| 95th Percentile Queue (veh) | | | | | | | | | 0.2 |
| Mitigated Conditions | | 1 | 1 | 0 | 1 | | 0 | | 1 |
| 2025 BUILD Conditions Volumes | | 254 | 12 | 0 | 335 | | 0 | | 52 |
| V/C Ratio | | | | | | | | | 0.08 |
| Level-of-Service | | | | | | | | | B |
| Control Delay (Seconds) | | | | | | | | | 10.1 |
| **Intersection LOS** | **TWSC** | | | | | | | | |
| 95th Percentile Queue (veh) | | | | | | | | | 0.2 |

| 8: Driveway "A" & Beckner Rd. 2035 Conditions | EB (Beckner Rd.) | | | WB (Beckner Rd.) | | | NB (Driveway "A") | | |
|---|---|---|---|---|---|---|---|---|---|
| | L | T | R | L | T | R | L | T | R |
| Existing Lane Geometry | | 1 | 1 | 0 | 1 | | 0 | | 1 |
| **AM Peak Hour** | | | | | | | | | |
| 2035 NO BUILD Conditions Volumes | | 296 | 21 | 0 | 334 | | 0 | | 19 |
| V/C Ratio | | | | | | | | | 0.03 |
| Level-of-Service | | | | | | | | | B |
| Control Delay (Seconds) | | | | | | | | | 10.2 |
| **Intersection LOS** | **TWSC** | | | | | | | | |
| 95th Percentile Queue (veh) | | | | | | | | | 0.1 |
| 2035 BUILD Conditions Volumes | | 335 | 82 | 0 | 479 | | 0 | | 21 |
| V/C Ratio | | | | | | | | | 0.04 |
| Level-of-Service | | | | | | | | | B |
| Control Delay (Seconds) | | | | | | | | | 10.5 |
| **Intersection LOS** | **TWSC** | | | | | | | | |
| 95th Percentile Queue (veh) | | | | | | | | | 0.1 |
| **PM Peak Hour** | | | | | | | | | |
| 2035 NO BUILD Conditions Volumes | | 282 | 12 | 0 | 360 | | 0 | | 52 |
| V/C Ratio | | | | | | | | | 0.08 |
| Level-of-Service | | | | | | | | | B |
| Control Delay (Seconds) | | | | | | | | | 10.4 |
| **Intersection LOS** | **TWSC** | | | | | | | | |
| 95th Percentile Queue (veh) | | | | | | | | | 0.3 |
| 2035 BUILD Conditions Volumes | | 443 | 46 | 0 | 468 | | 0 | | 64 |
| V/C Ratio | | | | | | | | | 0.12 |
| Level-of-Service | | | | | | | | | B |
| Control Delay (Seconds) | | | | | | | | | 12.1 |
| **Intersection LOS** | **TWSC** | | | | | | | | |
| 95th Percentile Queue (veh) | | | | | | | | | 0.4 |

The analysis of the proposed intersection of BECKNER RD. / DRIVEWAY “A” demonstrates that the delays will be acceptable for the 2025 and 2035 AM Peak Hour and PM Peak Hour conditions analyzed in this report. LOS ratings for all conditions are ‘A” or “B”.

INTERSECTIONS #9 & #10 – Beckner Rd. / Driveway “B” & Beckner Rd. / Driveway “C”

The results of the analysis of the signalized intersections of BECKNER RD. / DRIVEWAY “B” and “C” are summarized in the following tables:

| 9/10: Driveways "B" ("C") & Beckner Rd. 2025 Conditions | EB (Beckner Rd.) | | | WB (Beckner Rd.) | | | NB (Driveway "B" ("C") | | |
|---|---|---|---|---|---|---|---|---|---|
| | L | T | R | L | T | R | L | T | R |
| Existing Lane Geometry | | 1 | 1 | 1 | 1 | | 1 | | 1 |
| **AM Peak Hour** | | | | | | | | | |
| 2025 BUILD Conditions Volumes | | 350 | 11 | 45 | 310 | | 33 | | 9 |
| V/C Ratio | | | | 0.04 | | | 0.08 | | 0.01 |
| Level-of-Service | | | | A | | | B | | B |
| Control Delay (Seconds) | | | | 8.2 | | | 13.7 | | 10.5 |
| **Intersection LOS** | **TWSC** | | | | | | | | |
| 95th Percentile Queue (veh) | | | | 0.1 | | | 0.3 | | 0.0 |
| **PM Peak Hour** | | | | | | | | | |
| 2025 BUILD Conditions Volumes | | 450 | 50 | 50 | 361 | | 27 | | 7 |
| V/C Ratio | | | | 0.05 | | | 0.08 | | 0.01 |
| Level-of-Service | | | | A | | | C | | B |
| Control Delay (Seconds) | | | | 8.7 | | | 15.0 | | 11.3 |
| **Intersection LOS** | **TWSC** | | | | | | | | |
| 95th Percentile Queue (veh) | | | | 0.2 | | | 0.2 | | 0.0 |

| 9/10: Driveway "B" ("C") & Beckner Rd. 2035 Conditions | EB (Beckner Rd.) | | | WB (Beckner Rd.) | | | NB (Driveway "B" ("C") | | |
|---|---|---|---|---|---|---|---|---|---|
| | L | T | R | L | T | R | L | T | R |
| Existing Lane Geometry | | 1 | 1 | 1 | 1 | | 1 | | 1 |
| **AM Peak Hour** | | | | | | | | | |
| 2025 BUILD Conditions Volumes | | 400 | 11 | 45 | 400 | | 33 | | 9 |
| V/C Ratio | | | | 0.04 | | | 0.09 | | 0.02 |
| Level-of-Service | | | | A | | | B | | B |
| Control Delay (Seconds) | | | | 8.4 | | | 15.0 | | 10.9 |
| **Intersection LOS** | **TWSC** | | | | | | | | |
| 95th Percentile Queue (veh) | | | | 0.1 | | | 0.3 | | 0.0 |
| **PM Peak Hour** | | | | | | | | | |
| 2025 BUILD Conditions Volumes | | 500 | 50 | 50 | 400 | | 27 | | 7 |
| V/C Ratio | | | | 0.06 | | | 0.08 | | 0.01 |
| Level-of-Service | | | | A | | | C | | B |
| Control Delay (Seconds) | | | | 8.9 | | | 15.9 | | 11.8 |
| **Intersection LOS** | **TWSC** | | | | | | | | |
| 95th Percentile Queue (veh) | | | | 0.2 | | | 0.3 | | 0.0 |

The analysis tables above represent the operation of Intersection 9 (Driveway “B”) and Intersection 10 (Driveway “C”) which are expected to have similar volumes. The analysis demonstrates that both Driveways “B” and “C” will operate at LOS “C” or better for all conditions analyzed.

The initial phase of the Las Soleras Tracts 18B Project development is to be accessed via two existing driveways. Primary access will be via the recently constructed south leg of the existing intersection of Beckner Rd. / Walking Rain Rd. It is configured as a full access unsignalized single lane circulating roundabout intersection. The secondary access is an existing right-in, right-out driveway on the south side of Beckner Rd. approximately 470 east of Walking Rain Rd. (centerline

to centerline). The two existing access points meet the minimum access spacing requirements established by the New Mexico Department of Transportation's State Access Management Manual (SAMM) which establishes the following minimum spacing requirements based on a roadway classification for Beckner Rd. as an Urban Minor Arterial Roadway with a posted speed limit of 45 MPH.:

- Partial access – 400 ft. spacing (centerline to centerline)
- Full access – 660 ft. spacing (centerline to centerline)

Tract 18A, for the purposes of this Traffic Impact Study is assumed to be developed as residential uses so as to consider trips generated by the parcel. However, the developer has no definite planned uses defined for Tract 18A at this time. Tract 18A is zoned for C-2 uses. Therefore, any development of Tract 18A in the future will be required to comply with C-2 uses. If the trip generation rate for Tract 18A ends up being significantly higher that what is assumed in this Study, then an updated Traffic Impact Study will be required at the time of development of Tract 18A based on those uses.

Tract 18A has a frontage along Beckner of approximately 1,800 feet, and existing Driveway "A" is located approximately 320 feet west of the northwest corner of Tract 18A. There should be sufficient frontage east of existing Driveway "A" to proposed three full access driveways (or intersections) along the south side of Tract 18A to serve the parcel. The proposed plan layout on the preceding page serves as a demonstration of what access could be acceptable. The east driveway (Driveway "D") on Beckner Rd. for Tract 18A would be the south leg of the newly constructed roundabout (at Calle de Alegria). The three proposed driveways (intersections) along the south side of Beckner Rd. are hypothetical and conceptual at this point in time. This Study (and the associated access plan for Tract 18B) serves as a possible access scenario for the parcel, but is subject to change in the future depending on actual plan and uses proposed for the parcel in the future. Access for Tract 18A will be required to comply with the City of Santa Fe requirements at the time of actual development no matter what the uses might be.

All three of the new driveways (Driveways "B", "C", and "D") will have very similar volumes under this scenario. Driveways "B" and "C" will be standard at-grade two-way stop controlled intersections. Driveway "D" will be the south leg of the new roundabout recently constructed to serve the intersection of Calle de Alegria in Vista de la Sierra Subdivision.

Beckner Rd. is not classified on the Santa Fe Functional Classification of Roadways Map (approved by FHWA on 03/15/2016). For the purposes of this Study, it is assumed that Beckner Rd. is an Urban Collector roadway. The posted speed limit on Beckner Rd. is 45 M.P.H. The 45 M.P.H. posted speed limit does not make sense on a roadway that has roundabouts spaced at approximately 1,500 feet. Roundabouts should slow traffic down to about 20 to 25 MPH. It makes more sense to post the speed limit at about 35 M.P.H. It is suggested that the City of Santa Fe should perform a spot speed study along Beckner Rd. to establish a speed limit that is supported by Transportation Engineering practice. But under the assumption that the posted speed limit

remains at 45 MPH and Beckner Rd. is classified as an urban minor arterial roadway, then Table 18.C-1 stipulates that the minimum required distance between full access driveways / intersections is 660 feet (centerline to centerline). Following is a section of Table 18.C-1 from the New Mexico Department of Transportation's State Access Management Manual:



**Table 18.C-1**
**Access Spacing Standards for Intersections and Driveways**
**(centerline to centerline spacing in feet)**

| Access Category | Posted Speed (mph) | Intersection Spacing (feet) [1] | | Driveway Spacing (feet) [2] | | |
|---|---|---|---|---|---|---|
| | | | | Non-Traversable Median | | Traversable Median [4] |
| | | Signalized | Unsignalized [3] | Full Access | Partial Access | |
| Controlled-Access, Non-Interstate Highways | All Speeds | 5,280 | 2,640 | 2,640 | 2,640 | -NA- |
| UPA | 30 mph | 2,640 | 1,320 | 1,320 | 200 | 200 |
| | 35 to 40 mph | 2,640 | 1,320 | 1,320 | 325 | 325 |
| | 45 to 50 mph | 2,640 | 1,320 | 1,320 | 450 | 450 |
| | 55 mph | 5,280 | 1,320 | 1,320 | 625 | 625 |
| UMA | 30 mph | 1,760 | 660 | 660 | 175 | 175 |
| | 35 to 40 mph | 1,760 | 660 | 660 | 275 | 275 |
| | 45 to 50 mph | 2,640 | 660 | 660 | 400 | 400 |
| | 55 mph | 5,280 | 1,320 | 1,320 | 600 | 600 |

Proposed Driveway "B" is 600 feet east of Las Soleras Dr. and 1,000 feet west of Rail Runner Rd. This proposed spacing constitutes substantial compliance with the requirements established by the New Mexico Department of Transportation's State Access Management Manual (Table 18.C-1). However, recent conversations with City Staff resulted in support for a three-quarter access at Driveway "B" on Beckner Rd. with a requirement to construct an eastbound left turn lane.

The analysis of the proposed intersection of DRIVEWAY "C" / LAS SOLERAS DR. demonstrates that the delays will be acceptable for the 2025 and 2035 AM Peak Hour and PM Peak Hour conditions analyzed in this report. LOS ratings for all conditions are "A". Volumes on Las Soleras Dr. are very low since the Las Soleras bridge across Arroyo Chamiso is not yet constructed.

INTERSECTION #11 – Beckner Rd. / Driveway “D”(Calle de Alegria)

The results of the analysis of the unsignalized roundabout intersections of BECKNER RD. / DRIVEWAY “D” (Calle de Alegria) are summarized in the following tables:

| 11: Driveway "D" & Beckner Rd. 2022 / 2025 Conditions | EB (Beckner Rd.) | | | WB (Beckner Rd.) | | | NB (Walking Rain Rd.) | | | SB (Walking Rain Rd.) | | |
|---|---|---|---|---|---|---|---|---|---|---|---|---|
| | L | T | R | L | T | R | L | T | R | L | T | R |
| Existing Lane Geometry | 0 | <1> | 0 | 0 | <1> | 0 | 0 | <1> | 0 | 0 | <1> | 0 |
| **AM Peak Hour** | | | | | | | | | | | | |
| 2025 BUILD Conditions Volumes | 50 | 317 | 15 | 50 | 400 | 50 | 40 | 5 | 10 | 50 | 5 | 50 |
| V/C Ratio | | 0.33 | | | 0.45 | | | 0.07 | | | 0.15 | |
| Level-of-Service | | A | | | A | | | A | | | A | |
| Control Delay (Seconds) | | 6.2 | | | 7.7 | | | 4.9 | | | 6.3 | |
| **Intersection LOS** | **ROUNDABOUT - A - 6.9** | | | | | | | | | | | |
| 95th Percentile Queue (veh) | 1.5 | | | 2.4 | | | | 0.2 | | | 0.5 | |

| **PM Peak Hour** | | | | | | | | | | | | |
|---|---|---|---|---|---|---|---|---|---|---|---|---|
| 2025 BUILD Conditions Volumes | 50 | 352 | 15 | 50 | 400 | 50 | 40 | 5 | 10 | 50 | 5 | 50 |
| V/C Ratio | | 0.33 | | | 0.45 | | | 0.07 | | | 0.15 | |
| Level-of-Service | | A | | | A | | | A | | | A | |
| Control Delay (Seconds) | | 6.2 | | | 7.7 | | | 4.9 | | | 6.3 | |
| **Intersection LOS** | **ROUNDABOUT - A - 6.9** | | | | | | | | | | | |
| 95th Percentile Queue (veh) | 1.5 | | | 2.4 | | | | 0.2 | | | 0.5 | |

| 11: Driveway "D" & Beckner Rd. 2035 Conditions | EB (Beckner Rd.) | | | WB (Beckner Rd.) | | | NB (Walking Rain Rd.) | | | SB (Walking Rain Rd.) | | |
|---|---|---|---|---|---|---|---|---|---|---|---|---|
| | L | T | R | L | T | R | L | T | R | L | T | R |
| Existing Lane Geometry | 0 | <1> | 0 | 0 | <1> | 0 | 0 | <1> | 0 | 0 | <1> | 0 |
| **AM Peak Hour** | | | | | | | | | | | | |
| 2025 BUILD Conditions Volumes | 50 | 350 | 15 | 50 | 450 | 50 | 40 | 5 | 10 | 50 | 5 | 50 |
| V/C Ratio | | 0.35 | | | 0.42 | | | 0.07 | | | 0.14 | |
| Level-of-Service | | A | | | A | | | A | | | A | |
| Control Delay (Seconds) | | 6.4 | | | 7.3 | | | 5.0 | | | 6.3 | |
| **Intersection LOS** | **ROUNDABOUT - A - 6.7** | | | | | | | | | | | |
| 95th Percentile Queue (veh) | 1.6 | | | 2.1 | | | | 0.2 | | | 0.5 | |

| **PM Peak Hour** | | | | | | | | | | | | |
|---|---|---|---|---|---|---|---|---|---|---|---|---|
| 2025 BUILD Conditions Volumes | 50 | 400 | 50 | 50 | 450 | 50 | 40 | 5 | 10 | 50 | 5 | 50 |
| V/C Ratio | | 0.46 | | | 0.49 | | | 0.07 | | | 0.16 | |
| Level-of-Service | | A | | | A | | | A | | | A | |
| Control Delay (Seconds) | | 7.9 | | | 8.3 | | | 5.4 | | | 6.6 | |
| **Intersection LOS** | **ROUNDABOUT - A - 7.8** | | | | | | | | | | | |
| 95th Percentile Queue (veh) | 2.5 | | | 2.8 | | | | 0.2 | | | 0.6 | |

The analysis tables above represent the operation of Intersection 11 (Driveway “D”). The analysis demonstrates that Driveway “D” will operate at LOS “A” as a single lane circulating roundabout for all conditions analyzed.

## *Safety Analysis*

Historical crash data was collected from the New Mexico Department of Transportation's Traffic Safety Division (Traffic Records) for crashes that were reported from January 1, 2016 through December 31, 2020, a five-year period. Crash records were extracted for the signalized intersections of Beckner Rd. / Cerrillos Rd. and for Herrera Dr. (Wellness Way) / Cerrillos Rd. associated with this project. There were no reported crashes during the 2016 through 2020 study period at the roundabouts at Beckner Rd. / Wellness Way, Beckner Rd. / Los Soleras Dr., and Beckner Rd. / Rail Runner Rd. The fact that there were no crashes reported at those intersections is due to 1) relative low volumes of traffic, and 2) testimony that roundabouts are relatively safe intersections. The table summarizes the crash history from 2016 through 2020 at the two signalized intersections in the study area are on pages A-210 and A-211 in the Appendix of this report:

The crash rates in the tables seem consistent with national averages associated with relatively safely designed signalized intersections. It is commonly known that signalized intersections tend to have more rear-end type collisions. Hence, the "Following Too Closely" category of crashes is higher than the other types. This is to be expected.

No crash data was extracted from the intersection of Beckner Rd. / Richards Ave. since it is currently an unsignalized intersection but will soon be signalized. Signalization of the intersection of Beckner Rd. / Richards Ave. will change the crash characteristics of the intersection significantly. Crash analysis at this intersection would not serve any purpose at this point in time.

There is no recommendation made as a result of this crash analysis.

## *Impact Assessment*

The proposed Las Soleras, Tracts 18A & 18B Project will have no significant adverse impact on the adjacent transportation system provided the mitigation measures recommended in this study are implemented. The levels-of-service for all intersections in the study area are determined to be acceptable (LOS D or better) with the mitigation recommendations implemented.

## *Access Design Specifications*

A Determination of Warrants for Deceleration Lanes was performed for the proposed driveways as follows:

**DRIVEWAY 'A' / BECKNER RD.** - Analysis shows that an eastbound right turn deceleration lane on Beckner Rd. at Driveway "A" is warranted based on criteria established by the New Mexico Department of Transportation's *State Access Management Manual*. Driveway "A" is a right-in, right-out only driveway. Therefore, a left turn lane is not an issue. See Appendix Pages A-195 thru A-198 for associated worksheets.

**DRIVEWAY 'B' / BECKNER RD.** – Analysis shows that both a right turn deceleration lane and a left turn deceleration lane are required on Beckner Rd. at Driveway "B". The right turn deceleration lane will be required to be designed and constructed to a length of 370 feet including transition taper to meet the requirements of the New Mexico Department of Transportation's State Access Management Manual. However, Driveway "B" will not necessarily be required to be constructed at this time, and right / left turn deceleration lane design requirements may change by the time the construction of the driveway is needed.

**DRIVEWAY 'C' / BECKNER RD.** – Analysis shows that both a right turn deceleration lane and a left turn deceleration lane are required on Beckner Rd. at Driveway "C". The right turn deceleration lane will be required to be designed and constructed to a length of 370 feet including transition taper to meet the requirements of the New Mexico Department of Transportation's State Access Management Manual. However, Driveway "C" will not necessarily be required to be constructed at this time, and right / left turn deceleration lane design requirements may change by the time the construction of the driveway is needed.

**DRIVEWAY 'D' / BECKNER RD.** – Driveway "D" as conceptualized will be the south leg of a single lane circulating roundabout. Left and right turn deceleration lanes are not normally considered at roundabouts based on warrants, but rather on future capacity issues. No recommendation for a right or left turn deceleration lane on Beckner Rd. at Driveway "D is made in this report.

Sight distances at the proposed driveways are adequate. There are no significant vertical or horizontal curves along Beckner Rd. and there are no structures blocking sight distance into and out of the driveways. Sight distance issues will need to be considered in the planning and design of development for Las Soleras, Tracts 18A & 18B at proposed driveways.

Pedestrian facilities on Beckner Rd. will be constructed along the frontage of this project as well as future tracts in the project area as they develop. Existing pedestrian sidewalks and ADA compliant access ramps are constructed along Beckner Road.

Currently bicycle designations exist along Cerrillos Rd., Beckner Rd., Las Soleras Dr., and Rail Runner Rd. There are two bus stops (Route 26) on Beckner Rd. and one bus stop on Las Soleras Dr however there are no bus stops within a 1,000-feet of the project.

## *Summary of Deficiencies, Anticipated Impacts, and Recommendations*

The proposed Las Soleras, Tracts 18A & 18B will have no significant adverse impact on the adjacent transportation system for the 2025 Implementation Year and the 2035 Horizon Year.

Level of service (LOS) at the intersections in the study area meet or exceed the NMDOT's Minimum Acceptable Level of Service Standards for the 2025 implementation year and 2035 horizon year for all intersections in the study area. Therefore, there are no offsite mitigation measures recommended for this project. The recommendations are site related and are defined at the end of the Executive Summary of this report.

## *Appendix*


| | |
|---|---|
| ***SITE INFORMATION*** | |
| *Vicinity Map / Study Area Map* | *A-1* |
| *Study Area Map / Intersection Numbers* | *A-2* |
| *Proposed Site Plan* | *A-3* |
| *Other Recently Proposed / Approved Developments in Study Area Map* | *A-4* |
| *Roadway Functional Class Map* | *A-5* |
| *Santa Fe Bikeways and Trails Map* | *A-6* |
| ***BACKGROUND GROWTH*** | |
| *Historic AWDT Data* | *A-7* |
| *Growth Rate Graph* | *A-8* |
| ***TRIP GENERATION*** | |
| *Trip Generation Summary & Worksheets* | *A-10 thru A-12* |
| ***TRIP DISTRIBUTION AND TRIP ASSIGNMENTS*** | |
| *Santa Fe TAZ Map* | *A-13* |
| *Trips Distribution Worksheets (Retail Commercial)* | *A-14 thru A-19* |
| *Santa Fe Subarea Map* | *A-20* |
| *Trips Distribution Worksheets (Office)* | *A-21 thru A-26* |
| *Trip Distribution Map - Commercial (%)* | *A-27* |
| *Trip Assignments Map - Commercial (% Entering)* | *A-28* |
| *Trip Assignments Map - Commercial (% Exiting)* | *A-29* |
| *Trip Distribution Map - Office (%)* | *A-30* |
| *Trip Assignments Map - Office (% Entering)* | *A-31* |
| *Trip Assignments Map - Office (% Exiting)* | *A-32* |
| *Trip Distribution Map – Residential (%)* | *A-13* |
| *Trip Assignments Map – Residential (% Entering)* | *A-34* |
| *Trip Assignments Map – Residential (% Exiting)* | *A-35* |
| ***TURNING MOVEMENTS WORKSHEETS*** | |
| *Implementation Year (2025) Turning Movements Volumes Summary Sheets* | *A-36 thru A-38* |
| *Implementation Year (2025) Turning Movements Volumes Worksheets* | *A-39 thru A-60* |
| *Horizon Year (2035) Turning Movements Volumes Summary Sheets* | *A-61 thru A-63* |
| *Horizon Year (2035) Turning Movements Volumes Worksheets* | *A-64 thru A-85* |
| ***INTERSECTION ANALYSIS – IMPLEMENTATION YEAR (2025)*** | |
| *Intersection 1 – Cerrillos/Beckner - Signalized Intersection Analysis* | *A-86 thru A-95* |
| *Intersection 2 – Herrera (Wellness Way) / Cerrillos Rd - Signalized Intersection* | *A-96 thru A-105* |
| *Intersection 3 – Beckner Rd. / Richards Ave. - Signalized Intersection Analysis* | *A-106 thru A-115* |
| *Intersection 4 – Beckner/Wellness Way - Roundabout Intersection Analysis* | *A-116 thru A-121* |
| *Intersection 5 - Beckner/Las Soleras Dr. - Roundabout Intersection Analysis* | *A-122 thru A-127* |
| *Intersection 6 – Beckner/Rail Runner - Roundabout Intersection Analysis* | *A-128 thru A-133* |
| *Intersection 7 – Beckner Rd. / Walking Rain Rd.* | *A-134 thru A-139* |
| *Intersection 8 – Beckner Rd. / Driveway "A" - Unsignalized Intersection Analysis* | *A-140 thru A-141* |
| ***INTERSECTION ANALYSIS – HORIZON YEAR (2035)*** | |
| *Intersection 1 – Cerrillos/Beckner - Signalized Intersection Analysis* | *A-142 thru A-149* |
| *Intersection 2 – Herrera (Wellness Way) / Cerrillos Rd - Signalized Intersection* | *A-150 thru A-157* |
| *Intersection 3 – Beckner Rd. / Richards Ave. - Signalized Intersection Analysis* | *A-158 thru A-165* |
| *Intersection 4 – Beckner/Wellness Way - Roundabout Intersection Analysis* | *A-166 thru A-169* |
| *Intersection 5 - Beckner/Las Soleras Dr. - Roundabout Intersection Analysis* | *A-170 thru A-173* |

| | |
|---|---|
| *Intersection 6 – Beckner/Rail Runner - Roundabout Intersection Analysis* | *A-174 thru A-177* |
| *Intersection 7 – Beckner Rd. / Walking Rain Rd.* | *A-178 thru A-181* |
| *Intersection 8 – Beckner Rd. / Driveway "A" - Unsignalized Intersection Analysis* | *A-182 thru A-185* |
| *Future Theoretical Conceptual Driveways for Tract 18A* | *A-186 thru A- 194* |
| ***MISCELLANEOUS DATA*** | |
| *Determination of Warrants for Deceleration Lanes* | *A-195 thru A-198* |
| *Signal Timing Sheets / Scoping Letter* | *A-199 thru A-202* |
| *Traffic Count Data Sheets* | *A-203 thru A-209* |
| *NM DOT Crash Data* | *A-210 thru A-211* |

# *APPENDIX*

# Vicinity Map / Study Area

**NOTES:**

FIRE:
FIRE DEPARTMENT SHALL HAVE 150 FEET DISTANCE TO ANY PORTION OF THE BUILDING ON ANY NEW CONSTRUCTION. (IFC 2009 SECTION 503.1.1)

FIRE APPARATUS ACCESS SHALL HAVE AN UNOBSTRUCTED WIDTH OF NOT LESS THAN 20 FEET EXCLUSIVE OF SHOULDERS AND AN UNOBSTRUCTED VERTICAL CLEARANCE OF NOT LESS THAN 13 FEET 6 INCHES (IFC 2009 SECTION 503.2.1)

SHALL COMPLY WITH SECTION 507.5. FIRE HYDRANT SYSTEM. COMPLYING WITH SECTIONS 507.501–507.5.6

SHALL HAVE WATER SUPPLY THAT MEETS FIRE FLOW REQUIREMENTS AS PER IFC (APPENDIX B)

SHALL COMPLY WITH SECTION DI02.1 ACCESS AND LOADING (75,000 LBS).

SHALL MEET THE 150 FEET DRIVEWAY REQUIREMENTS MUST BE MET AS PER IFC, OR AN EMERGENCY TURN–AROUND THAT MEETS THE IFC REQUIREMENTS SHALL BE PROVIDED. (APPENDIX D TABLE DI03.4)

SHALL COMPLY WITH IFC 2009 SECTION D103.2 GRADE. FIRE APPARATUS ACCESS ROADS SHALL NOT EXCEED 10 PERCENT IN GRADE.

SHALL COMPLY WITH IFC 2009 SECTION DI03.5 FIRE APPARATUS ACCESS ROAD GATES.

SHALL COMPLY WITH IFC 2009, APPENDIX D, AERIAL FIRE APPARATUS ACCESS ROADS.

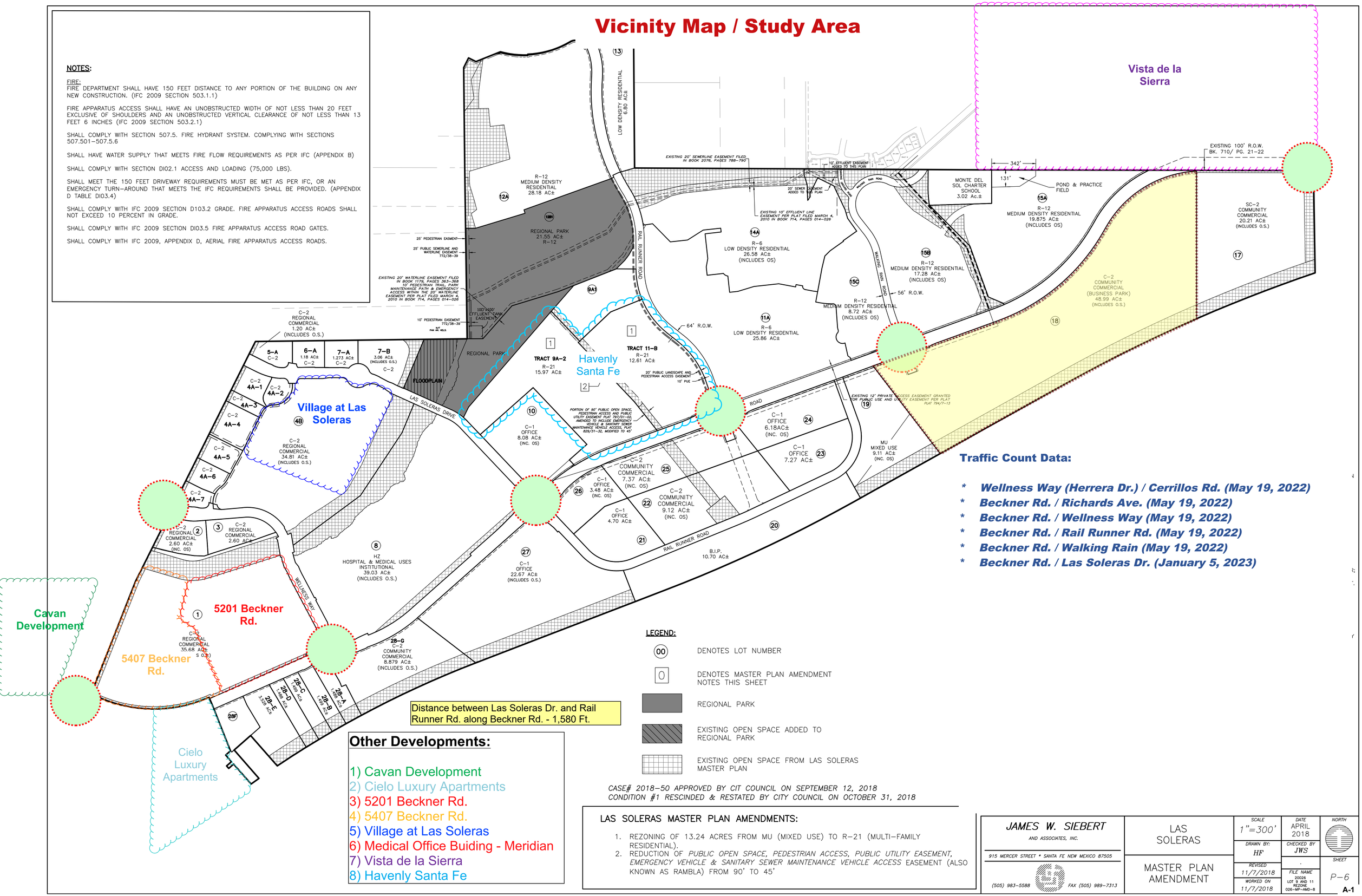


Distance between Las Soleras Dr. and Rail Runner Rd. along Beckner Rd. - 1,580 Ft.

## Other Developments:

1) Cavan Development
2) Cielo Luxury Apartments
3) 5201 Beckner Rd.
4) 5407 Beckner Rd.
5) Village at Las Soleras
6) Medical Office Buiding - Meridian
7) Vista de la Sierra
8) Havenly Santa Fe

## Traffic Count Data:

- ***Wellness Way (Herrera Dr.) / Cerrillos Rd. (May 19, 2022)***
- ***Beckner Rd. / Richards Ave. (May 19, 2022)***
- ***Beckner Rd. / Wellness Way (May 19, 2022)***
- ***Beckner Rd. / Rail Runner Rd. (May 19, 2022)***
- ***Beckner Rd. / Walking Rain (May 19, 2022)***
- ***Beckner Rd. / Las Soleras Dr. (January 5, 2023)***

**LEGEND:**

- (00) DENOTES LOT NUMBER
- [0] DENOTES MASTER PLAN AMENDMENT NOTES THIS SHEET
- REGIONAL PARK
- EXISTING OPEN SPACE ADDED TO REGIONAL PARK
- EXISTING OPEN SPACE FROM LAS SOLERAS MASTER PLAN

*CASE# 2018–50 APPROVED BY CIT COUNCIL ON SEPTEMBER 12, 2018*
*CONDITION #1 RESCINDED & RESTATED BY CITY COUNCIL ON OCTOBER 31, 2018*

LAS SOLERAS MASTER PLAN AMENDMENTS:

1. REZONING OF 13.24 ACRES FROM MU (MIXED USE) TO R–21 (MULTI–FAMILY RESIDENTIAL).
2. REDUCTION OF *PUBLIC OPEN SPACE, PEDESTRIAN ACCESS, PUBLIC UTILITY EASEMENT, EMERGENCY VEHICLE & SANITARY SEWER MAINTENANCE VEHICLE ACCESS* EASEMENT (ALSO KNOWN AS RAMBLA) FROM 90' TO 45'


JAMES W. SIEBERT AND ASSOCIATES, INC.
915 MERCER STREET * SANTA FE NEW MEXICO 87505
(505) 983–5588 FAX (505) 989–7313


LAS SOLERAS

MASTER PLAN AMENDMENT

| SCALE | DATE | NORTH |
|---|---|---|
| 1"=300' | APRIL 2018 | |
| DRAWN BY: HF | CHECKED BY JWS | |
| REVISED 11/7/2018 | . | SHEET P–6 |
| WORKED ON 11/7/2018 | FILE NAME 20026 LOT 9 AND 11 REZONE 026–MP–AMD–8 | |

A-1

# Vicinity Map / Study Area

## Intersection Numbers

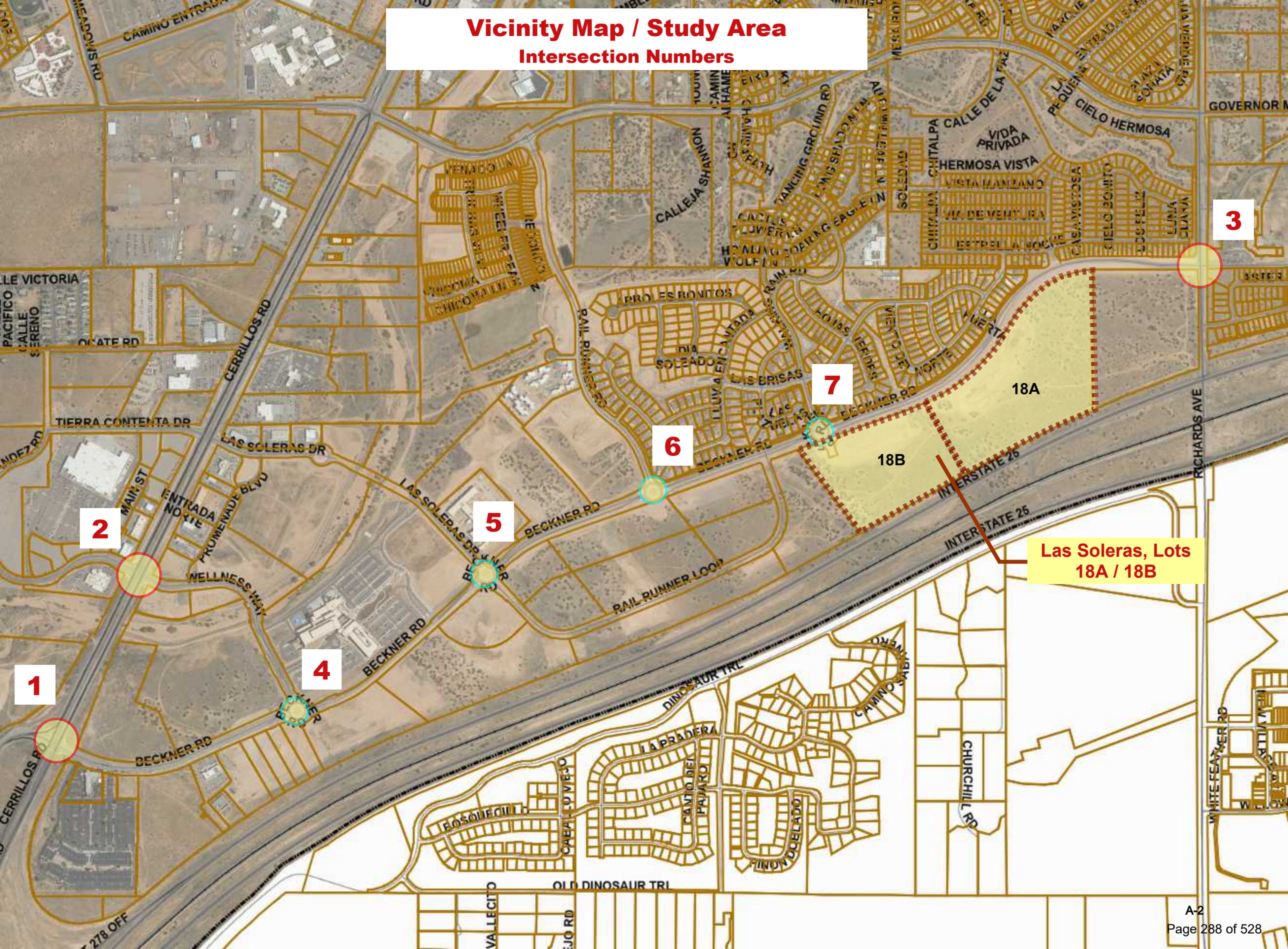

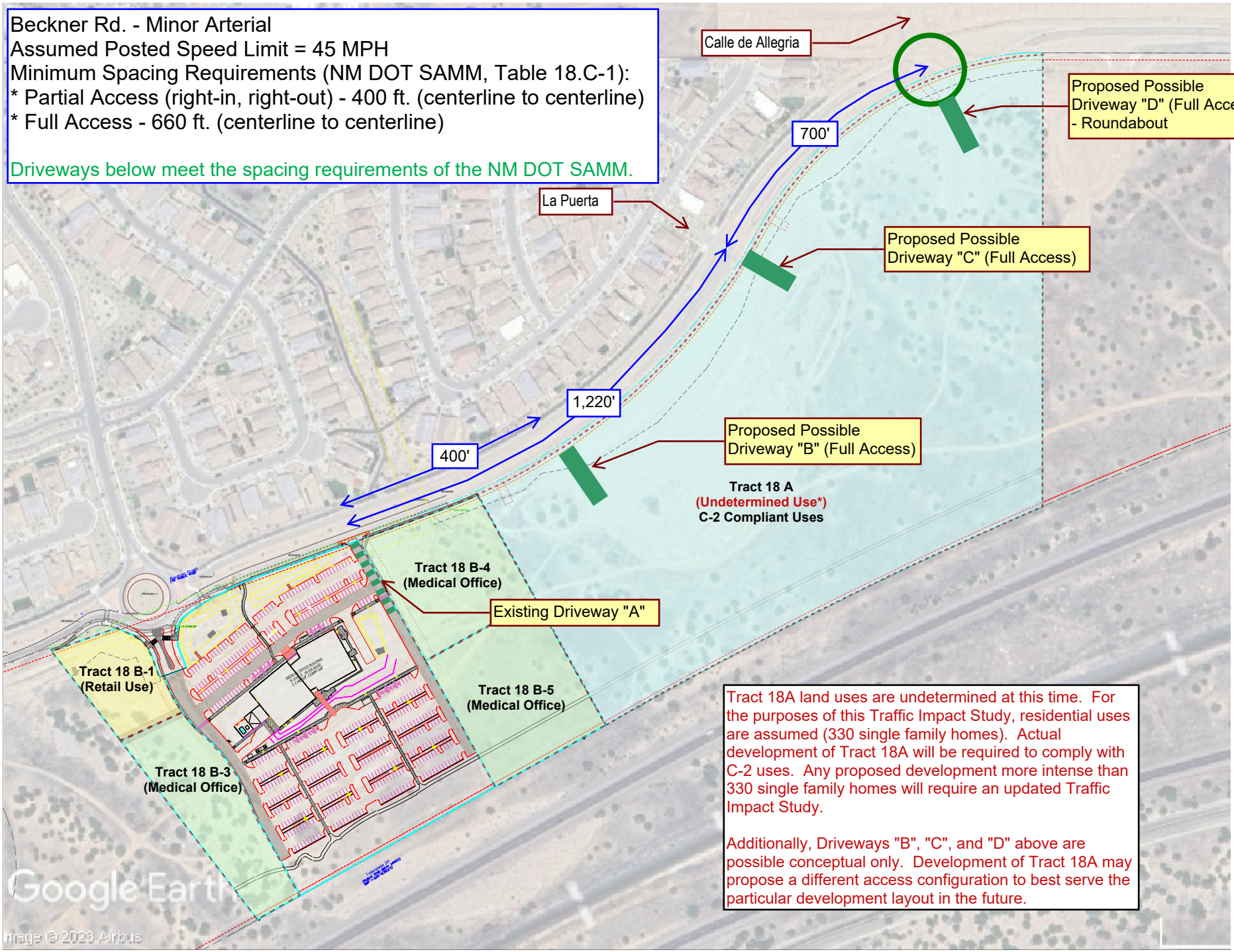
Beckner Rd. - Minor Arterial
Assumed Posted Speed Limit = 45 MPH
Minimum Spacing Requirements (NM DOT SAMM, Table 18.C-1):
* Partial Access (right-in, right-out) - 400 ft. (centerline to centerline)
* Full Access - 660 ft. (centerline to centerline)
Driveways below meet the spacing requirements of the NM DOT SAMM.
Calle de Allegria
Proposed Possible Driveway "D" (Full Access) - Roundabout
700'
La Puerta
Proposed Possible Driveway "C" (Full Access)
1,220'
400'
Proposed Possible Driveway "B" (Full Access)
Tract 18 A
(Undetermined Use*)
C-2 Compliant Uses
Tract 18 B-4
(Medical Office)
Existing Driveway "A"
Tract 18 B-1
(Retail Use)
Tract 18 B-5
(Medical Office)
Tract 18 B-3
(Medical Office)
Google Earth
Image © 2023 Airbus
Tract 18A land uses are undetermined at this time. For the purposes of this Traffic Impact Study, residential uses are assumed (330 single family homes). Actual development of Tract 18A will be required to comply with C-2 uses. Any proposed development more intense than 330 single family homes will require an updated Traffic Impact Study.
Additionally, Driveways "B", "C", and "D" above are possible conceptual only. Development of Tract 18A may propose a different access configuration to best serve the particular development layout in the future.

Vista de la Sierra

Vista de la Sierra Subdivision

Medical Office Building - Meridian

Village at Las Soleras

Keystone

Havenly Santa Fe

5201 Beckner Rd.

Cavan Development

5407 Beckner Rd.

Presbyterian Medical Office / Clinic

Cielo Luxury Apartments (Villa Sendero)

## Other Recently Proposed / Approved Developments in Study Area

Legend

Mileposts - 1 Mile Intervals

NMDOT Functional Class

1 - Interstate

2 - Principal Arterial - Other Freeways or Expressways

3 - Principal Arterial - Other

4 - Minor Arterial

5 - Major Collector

6 - Minor Collector

Urban_Area_Boundaries

Governor Miles Rd.

Richards Ave.

Cerrillos Rd.

Beckner Rd.

I-25

Proposed Las Soleras Medical Office Building

NORTH

# Santa Fe
## Bikeways & Trails

**MULTI-USE PATHS**
- Paved - Major
- Paved - Minor
- Paved - Future
- Unpaved - Wide
- Unpaved - Narrow
- Unpaved - Future

**ON STREET ROUTES**
- Bike Lane/Shoulder
- Bike Lane - Higher Traffic/Speed
- Shared-Lower Traffic/Speed
- Shared-Higher Traffic/Speed
- Unpaved Roadway
- Bicycle / Ped. Underpass
- State Bicycle Route 9
- NM Railrunner Station
- Transit Centers
- Trailhead Parking
- Bike Shops
- Schools
- Library
- Railroad Track
- Santa Fe City Limits
- City Park
- City and County Openspace
- US Forest Service
- NM State Land
- BLM Land

| | Bike Shop | Address | Phone |
|---|---|---|---|
| 1 | Bike N' Sport | 504 W. Cordova Rd. | 505-820-0809 |
| 2 | Broken Spoke | 1426 Cerrillos Rd. | 505-992-3102 |
| 3 | Butts on Bikes - by appointment only | 1929 Arroyo de las Cruces | 541-848-9379 |
| 4 | Chainbreaker Collective | 1515 5th St. | 505-989-3858 |
| 5 | Draic Bicycle Repairs & Customs | 3684a Lugar de Padilla | 505-316-1435 |
| 6 | Heritage Inspirations Tours & E-Bike Rentals | 211 Old Santa Fe Trail | 505-984-7909 |
| 7 | Mellow Velo | 132 East Marcy St. | 505-955-8356 |
| 8 | Pedego Electric Bikes Santa Fe | 5029 Agua Fria St. | 505-474-8398 |
| 9 | REI | 500 Market St. #100 | 505-982-3557 |
| 10 | Rob and Charlie's | 1632 St. Michaels Drive | 505-471-9119 |
| 11 | Sincere Cycles | 411 W Water St. Unit B | 505-983-8081 |
| 12 | Sirius Cycles | 2801 Rodeo Rd., Ste. B-8 | 505-819-7311 |
| 13 | Sleeping Bear Electric Bikes of Santa Fe | 7 Caliente Rd A-3 | 505-699-8884 |

| | Transit Centers | Service |
|---|---|---|
| 1 | Santa Fe Depot | NM Rail Runner & Bus Connections |
| 2 | South Capitol Station | NM Rail Runner & Bus Connections |
| 3 | Zia Station | NM Rail Runner & Bus Connections |
| 4 | Santa Fe County/NM 599 Station | NM Rail Runner & Bus Connections |
| 5 | Lamy Station | Amtrak, Santa Fe Southern R.R. |
| 6 | Downtown Sheridan Transit Center | Santa Fe Trails Transit & Connections |
| 7 | Santa Fe Place Transit Center (through 2021) | Santa Fe Trails Transit |
| 8 | Camino Entrada Transit Center (Opening 2022) | Santa Fe Trails Transit |
| 9 | NMDOT Park & Ride Lot | NMDOT Park & Ride |
| 10 | Agora Parking Lot, Eldorado | NCRTD 280 Eldorado |

Eldorado & Lamy

2021

DISCLAIMER
This map was compiled from information provided by the City of Santa Fe, Santa Fe County, Santa Fe Metropolitan Planning Organization and ESRI. Information on this map is for reference only and cannot be guaranteed for accuracy or quality. The City of Santa Fe assumes no liability for the use of this map or information.

Document Path: O:\MPO Admin\GIS\MapDocs\Bikeways2021.mxd

# Historic Growth Data Table

## [#2023079] - Las Soleras - Lots 19 thru 26

### Beckner Rd. / Rail Runner Rd.

**Traffic Flows (AWDT) from New Mexico Department of Transportation**

| COG ID | Location | | | | | | | | | | | |
|---|---|---|---|---|---|---|---|---|---|---|---|---|
| Intersection #1: | **Cerrillos Rd. North of Beckner Rd.** | | | | | | | | | | | |
| | **Street:** | **From:** | **To:** | **2013** | **2014** | **2015** | **2016** | **2017** | **2018** | **2019** | **2020** | **2021** | **2022** |
| N/A | Cerrillos Rd. | Beckner Rd. | Wellness Way | 22,039 | 21,927 | 22,104 | 22,104 | 21,686 | 21,513 | 21,664 | 17,699 | 22,983 | 23,512 |
| | **Total Intersection Traffic Flows** | | | **22,039** | **21,927** | **22,104** | **22,104** | **21,686** | **21,513** | **21,664** | **17,699** | **22,983** | **23,512** |

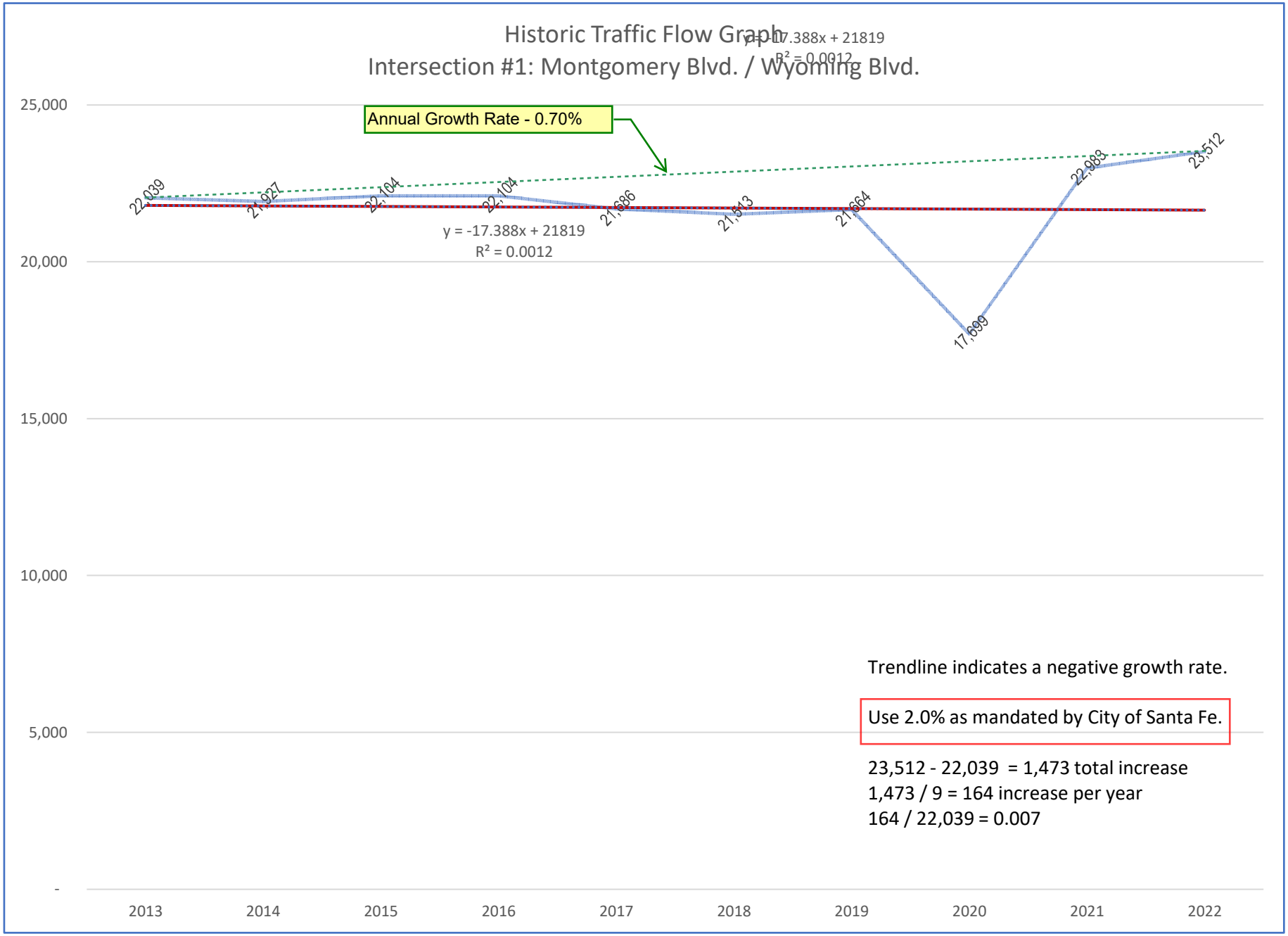
Historic Traffic Flow Graph
Intersection #1: Montgomery Blvd. / Wyoming Blvd.
y = -17.388x + 21819
R² = 0.0012
Annual Growth Rate - 0.70%
25,000
20,000
15,000
10,000
5,000
-
22,039
21,927
22,104
22,104
21,686
21,513
21,664
17,699
22,983
23,512
2013
2014
2015
2016
2017
2018
2019
2020
2021
2022
Trendline indicates a negative growth rate.
Use 2.0% as mandated by City of Santa Fe.
23,512 - 22,039 = 1,473 total increase
1,473 / 9 = 164 increase per year
164 / 22,039 = 0.007

# *Las Soleras, Tract 18-A/B (Beckner Rd. / Walking Rain Rd.)*

## Trip Generation Data (ITE Trip Generation Manual - 11th Edition)

| | USE (ITE CODE) | | 24 HR VOL | A. M. PEAK HR. | | P. M. PEAK HR. | |
|---|---|---|---|---|---|---|---|
| *Tract No.* | *DESCRIPTION* | | *GROSS* | *ENTER* | *EXIT* | *ENTER* | *EXIT* |
| | **Summary Sheet** | Units | | | | | |
| 18 B-1 | Coffee/Donut Shop w/ Drive Thru Window (937) | 2.70 | 1,441 | 118 | 114 | 53 | 53 |
| 18 B-3 / 4 / 5 | Medical-Dental Office Building (720) | 90.00 | 3,759 | 220 | 59 | 106 | 248 |
| 18-A | Single-Family Detached Housing (210) | 330 | 3,112 | 55 | 166 | 192 | 113 |
| | **Subtotal** | | **8,312** | **393** | **339** | **351** | **414** |
| | Internal Capture Trips | | | -81 | -81 | -28 | -28 |
| | **Net New Trips Generated** | | **8,312** | **312** | **258** | **323** | **386** |
| | Apportionment of internal capture trips: | | | | | | |
| | Percentage of Internal Capture Trips | | | -20.61% | -23.89% | -7.98% | -6.76% |
| | Coffee/Donut Shop w/ Drive Thru Window (937) - Internal Capture | | | (24) | (27) | (4) | (4) |
| | Medical-Dental Office Building (720) - Internal Capture | | | (45) | (14) | (8) | (17) |
| | Single-Family Detached Housing (210) - Internal Capture | | | (11) | (40) | (15) | (8) |
| | **Net External Trips:** | | | | | | |
| | Coffee/Donut Shop w/ Drive Thru Window (937) | | | 94 | 87 | 49 | 49 |
| | Medical-Dental Office Building (720) | | | 175 | 45 | 98 | 231 |
| | Single-Family Detached Housing (210) | | | 44 | 126 | 177 | 105 |

# Las Soleras, Tract 18-A/B (Beckner Rd. / Walking Rain Rd.)
## Trip Generation Data (ITE Trip Generation Manual - 11th Edition)

| USE (ITE CODE) | | 24 HOUR TWO-WAY VOLUME | A. M. PEAK HOUR | | P. M. PEAK HOUR | |
|---|---|---|---|---|---|---|
| | | GROSS | ENTER | EXIT | ENTER | EXIT |
| | Units | | | | | |
| *Coffee/Donut Shop w/ Drive Thru Window (937)* | *2.70* | 1,441 | 118 | 114 | 53 | 53 |
| | **1,000 S.F.** | | | | | |

**ITE Trip Generation Equations:**

Average Vehicle Trip Ends on a Weekday (24 HOUR TWO-WAY VOLUME)

**T =** ***533.57*** **(X) +** ***0***
***50%*** Enter, ***50%*** Exit

Average Vehicle Trip Ends on a Weekday, Peak Hour of Adjacent Street Traffic, One Hour Between 7am and 9am (A.M. PEAK HOUR)

**T =** ***85.88*** **(X) +** ***0***
***51%*** Enter, ***49%*** Exit

Average Vehicle Trip Ends on a Weekday, Peak Hour of Adjacent Street Traffic, One Hour Between 4pm and 6pm (P.M. PEAK HOUR)

**T =** ***38.99*** **(X) +** ***0***
***50%*** Enter, ***50%*** Exit

Comments:

18 B-1

Based on ITE Trip Generation Manual - 11th Edition

# Las Soleras, Tract 18-A/B (Beckner Rd. / Walking Rain Rd.)
## Trip Generation Data (ITE Trip Generation Manual - 11th Edition)

| USE (ITE CODE) | | 24 HOUR TWO-WAY VOLUME | A. M. PEAK HOUR | | P. M. PEAK HOUR | |
|---|---|---|---|---|---|---|
| | | GROSS | ENTER | EXIT | ENTER | EXIT |
| | Units | | | | | |
| ***Medical-Dental Office Building (720)*** | ***90.00*** | 3,759 | 220 | 59 | 106 | 248 |
| | **1,000 S.F.** | | | | | |

**ITE Trip Generation Equations:**

Average Vehicle Trip Ends on a Weekday (24 HOUR TWO-WAY VOLUME)

**T =** ***42.97*** **(X) +** ***-108.01***
***50%*** Enter, ***50%*** Exit

Average Vehicle Trip Ends on a Weekday, Peak Hour of Adjacent Street Traffic, One Hour Between 7am and 9am (A.M. PEAK HOUR)

**T =** ***3.1*** **(X) +** ***0***
***79%*** Enter, ***21%*** Exit

Average Vehicle Trip Ends on a Weekday, Peak Hour of Adjacent Street Traffic, One Hour Between 4pm and 6pm (P.M. PEAK HOUR)

**T =** ***3.93*** **(X) +** ***0***
***30%*** Enter, ***70%*** Exit

Comments:
18 B-3 / 4 / 5

Based on ITE Trip Generation Manual - 11th Edition

# Las Soleras, Tract 18-A/B (Beckner Rd. / Walking Rain Rd.)
## Trip Generation Data (ITE Trip Generation Manual - 11th Edition)

| USE (ITE CODE) | | 24 HOUR TWO-WAY VOLUME | A. M. PEAK HOUR | | P. M. PEAK HOUR | |
|---|---|---|---|---|---|---|
| | | GROSS | ENTER | EXIT | ENTER | EXIT |
| | Units | | | | | |
| *Single-Family Detached Housing (210)* | *330* | 3,112 | 55 | 166 | 192 | 113 |
| | **Dwelling Units** | | | | | |

**ITE Trip Generation Equations:**

Average Vehicle Trip Ends on a Weekday (24 HOUR TWO-WAY VOLUME)

**T =** ***9.43*** **(X) +** ***0***

***50%*** Enter, ***50%*** Exit

Average Vehicle Trip Ends on a Weekday, Peak Hour of Adjacent Street Traffic, One Hour Between 7am and 9am (A.M. PEAK HOUR)

**Ln(T) =** ***0.91*** **Ln(X) +** ***0.12***

***25%*** Enter, ***75%*** Exit

Average Vehicle Trip Ends on a Weekday, Peak Hour of Adjacent Street Traffic, One Hour Between 4pm and 6pm (P.M. PEAK HOUR)

**Ln(T) =** ***0.94*** **Ln(X) +** ***0.27***

***63%*** Enter, ***37%*** Exit

Comments:

18-A

Based on ITE Trip Generation Manual - 11th Edition

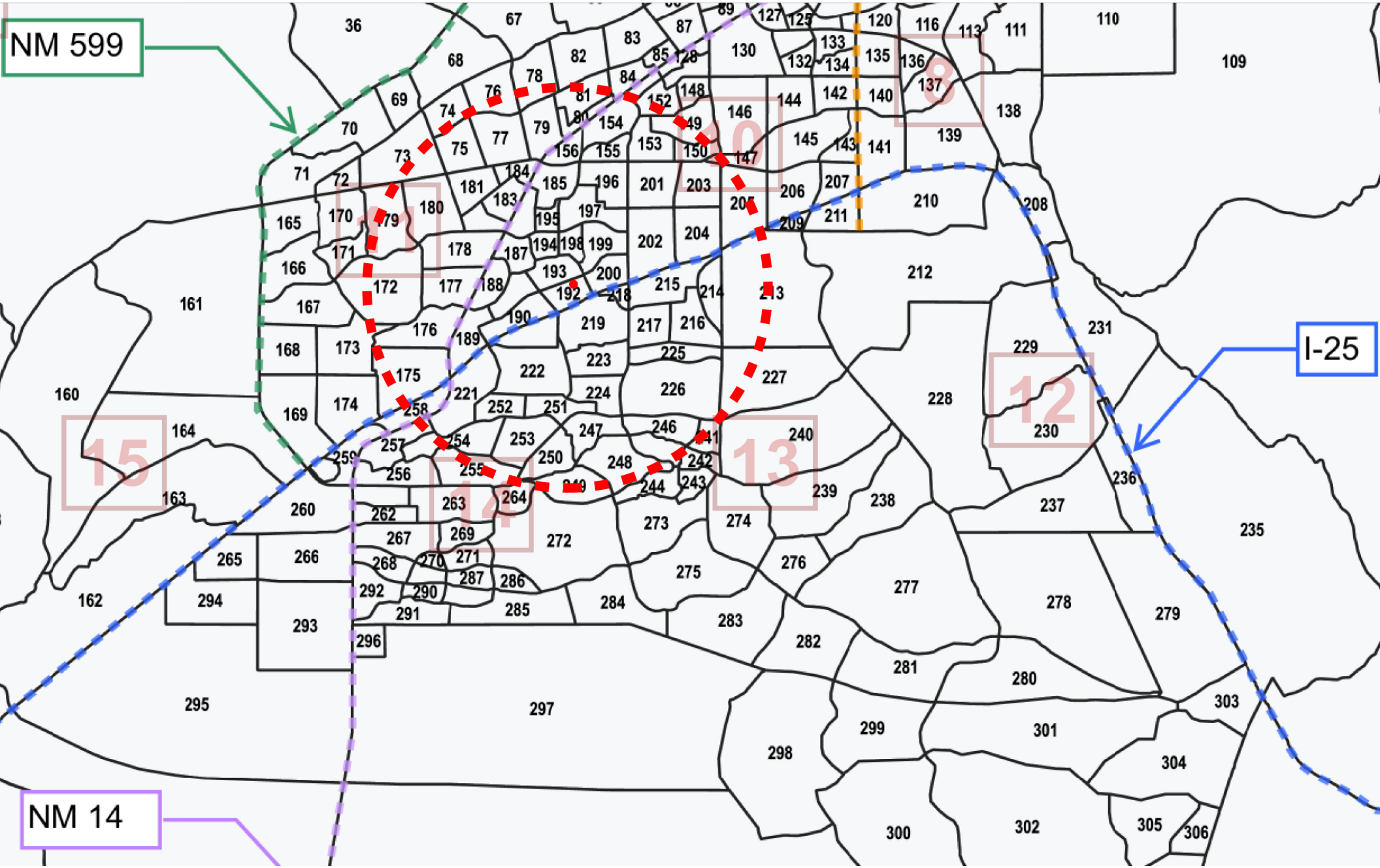
NM 599
I-25
NM 14
8
10
12
13
14
15

# Trip Distribution Table

## Las Soleras, Tracts 18A & 18B

TAZ Population Data for determination of Local Trip Distribution for Proposed **Commercial Trips**

*2015 and 2040 Data Taken from Santa Fe MPO*
*2040 Socioeconomic Forecasts by Data Analysis Subzones for the Santa Fe Metropolitan Planning Area*

| | | | | | | | **(HW)** Herrera Dr. West | | | **(CN)** Cerrillos Rd. North | | | **(LSN)** Las Soleras North | | | **(RRN)** Ral Runner North | | |
|---|---|---|---|---|---|---|---|---|---|---|---|---|---|---|---|---|---|---|
| **DASZ #** | % Sub Area in Study | 2016 Population | 2040 Population | Interpolated Population for the Year | **Population in Study** | **Percent Population** | % Utilizing | % Population Utilizing | Population | % Utilizing | % Population Utilizing | Population | % Utilizing | % Population Utilizing | Population | % Utilizing | % Population Utilizing | Population |
| | | **2016** | **2040** | **2025** | | | | | | | | | | | | | | |
| Boundary Specified on DASZ Map | | | | | | | | | | | | | | | | | | |
| **73** | 30% | 942 | 992 | 961 | 288 | **2.56%** | 0% | 0.00% | 0 | **100%** | 2.56% | 288 | 0% | 0.00% | 0 | 0% | 0.00% | 0 |
| **75** | 100% | 310 | 478 | 373 | 373 | **3.32%** | 0% | 0.00% | 0 | **100%** | 3.32% | 373 | 0% | 0.00% | 0 | 0% | 0.00% | 0 |
| **77** | 100% | 879 | 1096 | 960 | 960 | **8.54%** | 0% | 0.00% | 0 | **100%** | 8.54% | 960 | 0% | 0.00% | 0 | 0% | 0.00% | 0 |
| **79** | 100% | 238 | 370 | 288 | 288 | **2.56%** | 0% | 0.00% | 0 | **100%** | 2.56% | 288 | 0% | 0.00% | 0 | 0% | 0.00% | 0 |
| **80** | 100% | 176 | 229 | 196 | 196 | **1.74%** | 0% | 0.00% | 0 | **100%** | 1.74% | 196 | 0% | 0.00% | 0 | 0% | 0.00% | 0 |
| **81** | 70% | 584 | 699 | 627 | 439 | **3.91%** | 0% | 0.00% | 0 | **100%** | 3.91% | 439 | 0% | 0.00% | 0 | 0% | 0.00% | 0 |
| **150** | 90% | 142 | 142 | 142 | 128 | **1.14%** | 0% | 0.00% | 0 | **90%** | 1.02% | 115 | 0% | 0.00% | 0 | 0% | 0.00% | 0 |
| **153** | 100% | 82 | 82 | 82 | 82 | **0.73%** | 0% | 0.00% | 0 | **90%** | 0.66% | 74 | 0% | 0.00% | 0 | 0% | 0.00% | 0 |
| **154** | 100% | 401 | 416 | 407 | 407 | **3.62%** | 0% | 0.00% | 0 | **90%** | 3.26% | 366 | 0% | 0.00% | 0 | 0% | 0.00% | 0 |
| **155** | 100% | 268 | 276 | 271 | 271 | **2.41%** | 0% | 0.00% | 0 | **90%** | 2.17% | 244 | 0% | 0.00% | 0 | 0% | 0.00% | 0 |
| **156** | 100% | 0 | 0 | 0 | 0 | **0.00%** | 0% | 0.00% | 0 | **90%** | 0.00% | 0 | 0% | 0.00% | 0 | 0% | 0.00% | 0 |
| **172** | 70% | 226 | 2107 | 931 | 652 | **5.80%** | **30%** | 1.74% | 196 | **70%** | 4.06% | 456 | 0% | 0.00% | 0 | 0% | 0.00% | 0 |
| **175** | 80% | 222 | 320 | 259 | 207 | **1.84%** | **100%** | 1.84% | 207 | 0% | 0.00% | 0 | 0% | 0.00% | 0 | 0% | 0.00% | 0 |
| **176** | 100% | 171 | 765 | 394 | 394 | **3.51%** | **30%** | 1.05% | 118 | **70%** | 2.45% | 276 | 0% | 0.00% | 0 | 0% | 0.00% | 0 |
| **177** | 100% | 0 | 400 | 150 | 150 | **1.33%** | 0% | 0.00% | 0 | **100%** | 1.33% | 150 | 0% | 0.00% | 0 | 0% | 0.00% | 0 |
| **178** | 100% | 953 | 1148 | 1,026 | 1,026 | **9.13%** | 0% | 0.00% | 0 | **100%** | 9.13% | 1,026 | 0% | 0.00% | 0 | 0% | 0.00% | 0 |
| **179** | 100% | 522 | 522 | 522 | 522 | **4.64%** | 0% | 0.00% | 0 | **100%** | 4.64% | 522 | 0% | 0.00% | 0 | 0% | 0.00% | 0 |
| **180** | 60% | 290 | 290 | 290 | 174 | **1.55%** | 0% | 0.00% | 0 | **60%** | 0.93% | 104 | 0% | 0.00% | 0 | **40%** | 0.62% | 70 |
| **181** | 100% | 417 | 417 | 417 | 417 | **3.71%** | 0% | 0.00% | 0 | **60%** | 2.23% | 250 | 0% | 0.00% | 0 | **40%** | 1.48% | 167 |
| **182** | 100% | 0 | 0 | 0 | 0 | **0.00%** | 0% | 0.00% | 0 | **60%** | 0.00% | 0 | 0% | 0.00% | 0 | **40%** | 0.00% | 0 |
| **183** | 100% | 0 | 0 | 0 | 0 | **0.00%** | 0% | 0.00% | 0 | **60%** | 0.00% | 0 | 0% | 0.00% | 0 | **40%** | 0.00% | 0 |
| **184** | 100% | 0 | 0 | 0 | 0 | **0.00%** | 0% | 0.00% | 0 | **60%** | 0.00% | 0 | 0% | 0.00% | 0 | **40%** | 0.00% | 0 |
| **185** | 100% | 28 | 225 | 102 | 102 | **0.91%** | 0% | 0.00% | 0 | **60%** | 0.54% | 61 | 0% | 0.00% | 0 | **40%** | 0.36% | 41 |
| **186** | 100% | 0 | 0 | 0 | 0 | **0.00%** | 0% | 0.00% | 0 | **60%** | 0.00% | 0 | 0% | 0.00% | 0 | **40%** | 0.00% | 0 |
| **187** | 100% | 0 | 140 | 53 | 53 | **0.47%** | 0% | 0.00% | 0 | **60%** | 0.28% | 32 | 0% | 0.00% | 0 | **40%** | 0.19% | 21 |
| **188** | 100% | 7 | 7 | 7 | 7 | **0.06%** | 0% | 0.00% | 0 | **60%** | 0.04% | 4 | 0% | 0.00% | 0 | **40%** | 0.02% | 3 |
| **189** | 100% | 0 | 0 | 0 | 0 | **0.00%** | 0% | 0.00% | 0 | **60%** | 0.00% | 0 | 0% | 0.00% | 0 | **40%** | 0.00% | 0 |
| **190** | 100% | 0 | 0 | 0 | 0 | **0.00%** | 0% | 0.00% | 0 | **100%** | 0.00% | 0 | 0% | 0.00% | 0 | 0% | 0.00% | 0 |
| **191** | 100% | 0 | 400 | 150 | 150 | **1.33%** | 0% | 0.00% | 0 | 0% | 0.00% | 0 | 0% | 0.00% | 0 | **100%** | 1.33% | 150 |
| **192** | 100% | 0 | 50 | 19 | 19 | **0.17%** | 0% | 0.00% | 0 | 0% | 0.00% | 0 | 0% | 0.00% | 0 | **100%** | 0.17% | 19 |
| **193** | 100% | 0 | 350 | 131 | 131 | **1.17%** | 0% | 0.00% | 0 | 0% | 0.00% | 0 | **50%** | 0.58% | 66 | **50%** | 0.58% | 66 |
| **194** | 100% | 0 | 30 | 11 | 11 | **0.10%** | 0% | 0.00% | 0 | **40%** | 0.04% | 4 | 0% | 0.00% | 0 | **60%** | 0.06% | 7 |
| **195** | 100% | 45 | 58 | 50 | 50 | **0.44%** | 0% | 0.00% | 0 | **40%** | 0.18% | 20 | 0% | 0.00% | 0 | **60%** | 0.27% | 30 |
| **196** | 100% | 131 | 172 | 146 | 146 | **1.30%** | 0% | 0.00% | 0 | 0% | 0.00% | 0 | 0% | 0.00% | 0 | **40%** | 0.52% | 58 |
| **197** | 100% | 228 | 274 | 245 | 245 | **2.18%** | 0% | 0.00% | 0 | 0% | 0.00% | 0 | 0% | 0.00% | 0 | **40%** | 0.87% | 98 |
| **198** | 100% | 350 | 497 | 405 | 405 | **3.60%** | 0% | 0.00% | 0 | 0% | 0.00% | 0 | 0% | 0.00% | 0 | **80%** | 2.88% | 324 |
| **199** | 100% | 0 | 450 | 169 | 169 | **1.50%** | 0% | 0.00% | 0 | 0% | 0.00% | 0 | 0% | 0.00% | 0 | **50%** | 0.75% | 85 |
| **200** | 100% | 0 | 200 | 75 | 75 | **0.67%** | 0% | 0.00% | 0 | 0% | 0.00% | 0 | 0% | 0.00% | 0 | 0% | 0.00% | 0 |
| **201** | 100% | 543 | 544 | 543 | 543 | **4.83%** | 0% | 0.00% | 0 | 0% | 0.00% | 0 | 0% | 0.00% | 0 | **40%** | 1.93% | 217 |
| **202** | 100% | 85 | 119 | 98 | 98 | **0.87%** | 0% | 0.00% | 0 | 0% | 0.00% | 0 | 0% | 0.00% | 0 | 0% | 0.00% | 0 |
| **203** | 100% | 386 | 386 | 386 | 386 | **3.43%** | 0% | 0.00% | 0 | 0% | 0.00% | 0 | 0% | 0.00% | 0 | **20%** | 0.69% | 77 |
| **204** | 100% | 245 | 272 | 255 | 255 | **2.27%** | 0% | 0.00% | 0 | 0% | 0.00% | 0 | 0% | 0.00% | 0 | **20%** | 0.45% | 51 |
| **205** | 60% | 388 | 438 | 407 | 244 | **2.17%** | 0% | 0.00% | 0 | 0% | 0.00% | 0 | 0% | 0.00% | 0 | **20%** | 0.43% | 49 |
| **213** | 50% | 251 | 251 | 251 | 126 | **1.12%** | 0% | 0.00% | 0 | 0% | 0.00% | 0 | 0% | 0.00% | 0 | 0% | 0.00% | 0 |
| **215** | 100% | 0 | 172 | 65 | 65 | **0.58%** | 0% | 0.00% | 0 | 0% | 0.00% | 0 | 0% | 0.00% | 0 | 0% | 0.00% | 0 |

# Trip Distribution Table

## Las Soleras, Tracts 18A & 18B

TAZ Population Data for determination of Local Trip Distribution for Proposed **Commercial Trips**

*2015 and 2040 Data Taken from Santa Fe MPO*
*2040 Socioeconomic Forecasts by Data Analysis Subzones for the Santa Fe Metropolitan Planning Area*

| | | | | | | | (HW) Herrera Dr. West | | | (CN) Cerrillos Rd. North | | | (LSN) Las Soleras North | | | (RRN) Ral Runner North | | |
|---|---|---|---|---|---|---|---|---|---|---|---|---|---|---|---|---|---|---|
| **DASZ #** | % Sub Area in Study | 2016 Population | 2040 Population | Interpolated Population for the Year | **Population in Study** | **Percent Population** | % Utilizing | % Population Utilizing | Population | % Utilizing | % Population Utilizing | Population | % Utilizing | % Population Utilizing | Population | % Utilizing | % Population Utilizing | Population |
| | | **2016** | **2040** | **2025** | | | | | | | | | | | | | | |
| Boundary Specified on DASZ Map | | | | | | | | | | | | | | | | | | |
| **217** | 100% | 60 | 260 | 135 | 135 | **1.20%** | 0% | 0.00% | 0 | 0% | 0.00% | 0 | 0% | 0.00% | 0 | 0% | 0.00% | 0 |
| **218** | 100% | 0 | 0 | 0 | 0 | **0.00%** | 0% | 0.00% | 0 | 0% | 0.00% | 0 | 0% | 0.00% | 0 | 0% | 0.00% | 0 |
| **219** | 100% | 31 | 101 | 57 | 57 | **0.51%** | 0% | 0.00% | 0 | 0% | 0.00% | 0 | 0% | 0.00% | 0 | 0% | 0.00% | 0 |
| **221** | 100% | 5 | 126 | 50 | 50 | **0.44%** | 0% | 0.00% | 0 | 0% | 0.00% | 0 | 0% | 0.00% | 0 | 0% | 0.00% | 0 |
| **222** | 100% | 34 | 64 | 45 | 45 | **0.40%** | 0% | 0.00% | 0 | 0% | 0.00% | 0 | 0% | 0.00% | 0 | 0% | 0.00% | 0 |
| **223** | 100% | 0 | 0 | 0 | 0 | **0.00%** | 0% | 0.00% | 0 | 0% | 0.00% | 0 | 0% | 0.00% | 0 | 0% | 0.00% | 0 |
| **224** | 100% | 0 | 13 | 5 | 5 | **0.04%** | 0% | 0.00% | 0 | 0% | 0.00% | 0 | 0% | 0.00% | 0 | 0% | 0.00% | 0 |
| **225** | 100% | 20 | 270 | 114 | 114 | **1.01%** | 0% | 0.00% | 0 | 0% | 0.00% | 0 | 0% | 0.00% | 0 | 0% | 0.00% | 0 |
| **226** | 100% | 0 | 0 | 0 | 0 | **0.00%** | 0% | 0.00% | 0 | 0% | 0.00% | 0 | 0% | 0.00% | 0 | 0% | 0.00% | 0 |
| **227** | 20% | 0 | 0 | 0 | 0 | **0.00%** | 0% | 0.00% | 0 | 0% | 0.00% | 0 | 0% | 0.00% | 0 | 0% | 0.00% | 0 |
| **241** | 30% | 0 | 0 | 0 | 0 | **0.00%** | 0% | 0.00% | 0 | 0% | 0.00% | 0 | 0% | 0.00% | 0 | 0% | 0.00% | 0 |
| **246** | 100% | 0 | 0 | 0 | 0 | **0.00%** | 0% | 0.00% | 0 | 0% | 0.00% | 0 | 0% | 0.00% | 0 | 0% | 0.00% | 0 |
| **247** | 100% | 110 | 110 | 110 | 110 | **0.98%** | 0% | 0.00% | 0 | 0% | 0.00% | 0 | 0% | 0.00% | 0 | 0% | 0.00% | 0 |
| **248** | 100% | 59 | 59 | 59 | 59 | **0.52%** | 0% | 0.00% | 0 | 0% | 0.00% | 0 | 0% | 0.00% | 0 | 0% | 0.00% | 0 |
| **249** | 100% | 61 | 61 | 61 | 61 | **0.54%** | 0% | 0.00% | 0 | 0% | 0.00% | 0 | 0% | 0.00% | 0 | 0% | 0.00% | 0 |
| **250** | 100% | 65 | 65 | 65 | 65 | **0.58%** | 0% | 0.00% | 0 | 0% | 0.00% | 0 | 0% | 0.00% | 0 | 0% | 0.00% | 0 |
| **251** | 100% | 59 | 159 | 97 | 97 | **0.86%** | 0% | 0.00% | 0 | 0% | 0.00% | 0 | 0% | 0.00% | 0 | 0% | 0.00% | 0 |
| **252** | 100% | 0 | 163 | 61 | 61 | **0.54%** | 0% | 0.00% | 0 | 0% | 0.00% | 0 | 0% | 0.00% | 0 | 0% | 0.00% | 0 |
| **253** | 100% | 27 | 100 | 54 | 54 | **0.48%** | 0% | 0.00% | 0 | 0% | 0.00% | 0 | 0% | 0.00% | 0 | 0% | 0.00% | 0 |
| **254** | 100% | 4 | 150 | 59 | 59 | **0.52%** | 0% | 0.00% | 0 | 0% | 0.00% | 0 | 0% | 0.00% | 0 | 0% | 0.00% | 0 |
| **255** | 20% | 21 | 169 | 77 | 15 | **0.13%** | 0% | 0.00% | 0 | 0% | 0.00% | 0 | 0% | 0.00% | 0 | 0% | 0.00% | 0 |
| **258** | 50% | 0 | 0 | 0 | 0 | **0.00%** | 0% | 0.00% | 0 | 0% | 0.00% | 0 | 0% | 0.00% | 0 | 0% | 0.00% | 0 |
| | | | | 12,913 | 11,241 | 100.00% | | | **521** | | | **6,250** | | | **66** | | | **1,531** |
| | | | | | | | | | 4.63% | | | 55.60% | | | 0.58% | | | 13.62% |

# Trip Distribution Table

## Las Soleras, Tracts 18A & 18B

TAZ Population Data for determination of Local Trip Distribution for Proposed **Commercial Trips**

*2015 and 2040 Data Taken from Santa Fe MPO*
*2040 Socioeconomic Forecasts by Data Analysis Subzones for the Santa Fe Metropolitan Planning Area*

| | | | | | | | (WRN) Walking Rain North | | | (RN) Richards Ave. North | | | (BE) Beckner Rd. East | | | (RS) Richards Ave. South | | |
|---|---|---|---|---|---|---|---|---|---|---|---|---|---|---|---|---|---|---|
| **DASZ #** | % Sub Area in Study | 2016 Population | 2040 Population | Interpolated Population for the Year | **Population in Study** | **Percent Population** | % Utilizing | % Population Utilizing | Population | % Utilizing | % Population Utilizing | Population | % Utilizing | % Population Utilizing | Population | % Utilizing | % Population Utilizing | Population |
| | | **2016** | **2040** | **2025** | | | | | | | | | | | | | | |
| Boundary Specified on DASZ Map | | | | | | | | | | | | | | | | | | |
| **73** | 30% | 942 | 992 | 961 | 288 | **2.56%** | 0% | 0.00% | 0 | 0% | 0.00% | 0 | 0% | 0.00% | 0 | 0% | 0.00% | 0 |
| **75** | 100% | 310 | 478 | 373 | 373 | **3.32%** | 0% | 0.00% | 0 | 0% | 0.00% | 0 | 0% | 0.00% | 0 | 0% | 0.00% | 0 |
| **77** | 100% | 879 | 1096 | 960 | 960 | **8.54%** | 0% | 0.00% | 0 | 0% | 0.00% | 0 | 0% | 0.00% | 0 | 0% | 0.00% | 0 |
| **79** | 100% | 238 | 370 | 288 | 288 | **2.56%** | 0% | 0.00% | 0 | 0% | 0.00% | 0 | 0% | 0.00% | 0 | 0% | 0.00% | 0 |
| **80** | 100% | 176 | 229 | 196 | 196 | **1.74%** | 0% | 0.00% | 0 | 0% | 0.00% | 0 | 0% | 0.00% | 0 | 0% | 0.00% | 0 |
| **81** | 70% | 584 | 699 | 627 | 439 | **3.91%** | 0% | 0.00% | 0 | 0% | 0.00% | 0 | 0% | 0.00% | 0 | 0% | 0.00% | 0 |
| **150** | 90% | 142 | 142 | 142 | 128 | **1.14%** | 0% | 0.00% | 0 | **10%** | 0.11% | 13 | 0% | 0.00% | 0 | 0% | 0.00% | 0 |
| **153** | 100% | 82 | 82 | 82 | 82 | **0.73%** | 0% | 0.00% | 0 | **10%** | 0.07% | 8 | 0% | 0.00% | 0 | 0% | 0.00% | 0 |
| **154** | 100% | 401 | 416 | 407 | 407 | **3.62%** | 0% | 0.00% | 0 | **10%** | 0.36% | 41 | 0% | 0.00% | 0 | 0% | 0.00% | 0 |
| **155** | 100% | 268 | 276 | 271 | 271 | **2.41%** | 0% | 0.00% | 0 | **10%** | 0.24% | 27 | 0% | 0.00% | 0 | 0% | 0.00% | 0 |
| **156** | 100% | 0 | 0 | 0 | 0 | **0.00%** | 0% | 0.00% | 0 | **10%** | 0.00% | 0 | 0% | 0.00% | 0 | 0% | 0.00% | 0 |
| **172** | 70% | 226 | 2107 | 931 | 652 | **5.80%** | 0% | 0.00% | 0 | 0% | 0.00% | 0 | 0% | 0.00% | 0 | 0% | 0.00% | 0 |
| **175** | 80% | 222 | 320 | 259 | 207 | **1.84%** | 0% | 0.00% | 0 | 0% | 0.00% | 0 | 0% | 0.00% | 0 | 0% | 0.00% | 0 |
| **176** | 100% | 171 | 765 | 394 | 394 | **3.51%** | 0% | 0.00% | 0 | 0% | 0.00% | 0 | 0% | 0.00% | 0 | 0% | 0.00% | 0 |
| **177** | 100% | 0 | 400 | 150 | 150 | **1.33%** | 0% | 0.00% | 0 | 0% | 0.00% | 0 | 0% | 0.00% | 0 | 0% | 0.00% | 0 |
| **178** | 100% | 953 | 1148 | 1,026 | 1,026 | **9.13%** | 0% | 0.00% | 0 | 0% | 0.00% | 0 | 0% | 0.00% | 0 | 0% | 0.00% | 0 |
| **179** | 100% | 522 | 522 | 522 | 522 | **4.64%** | 0% | 0.00% | 0 | 0% | 0.00% | 0 | 0% | 0.00% | 0 | 0% | 0.00% | 0 |
| **180** | 60% | 290 | 290 | 290 | 174 | **1.55%** | 0% | 0.00% | 0 | 0% | 0.00% | 0 | 0% | 0.00% | 0 | 0% | 0.00% | 0 |
| **181** | 100% | 417 | 417 | 417 | 417 | **3.71%** | 0% | 0.00% | 0 | 0% | 0.00% | 0 | 0% | 0.00% | 0 | 0% | 0.00% | 0 |
| **182** | 100% | 0 | 0 | 0 | 0 | **0.00%** | 0% | 0.00% | 0 | 0% | 0.00% | 0 | 0% | 0.00% | 0 | 0% | 0.00% | 0 |
| **183** | 100% | 0 | 0 | 0 | 0 | **0.00%** | 0% | 0.00% | 0 | 0% | 0.00% | 0 | 0% | 0.00% | 0 | 0% | 0.00% | 0 |
| **184** | 100% | 0 | 0 | 0 | 0 | **0.00%** | 0% | 0.00% | 0 | 0% | 0.00% | 0 | 0% | 0.00% | 0 | 0% | 0.00% | 0 |
| **185** | 100% | 28 | 225 | 102 | 102 | **0.91%** | 0% | 0.00% | 0 | 0% | 0.00% | 0 | 0% | 0.00% | 0 | 0% | 0.00% | 0 |
| **186** | 100% | 0 | 0 | 0 | 0 | **0.00%** | 0% | 0.00% | 0 | 0% | 0.00% | 0 | 0% | 0.00% | 0 | 0% | 0.00% | 0 |
| **187** | 100% | 0 | 140 | 53 | 53 | **0.47%** | 0% | 0.00% | 0 | 0% | 0.00% | 0 | 0% | 0.00% | 0 | 0% | 0.00% | 0 |
| **188** | 100% | 7 | 7 | 7 | 7 | **0.06%** | 0% | 0.00% | 0 | 0% | 0.00% | 0 | 0% | 0.00% | 0 | 0% | 0.00% | 0 |
| **189** | 100% | 0 | 0 | 0 | 0 | **0.00%** | 0% | 0.00% | 0 | 0% | 0.00% | 0 | 0% | 0.00% | 0 | 0% | 0.00% | 0 |
| **190** | 100% | 0 | 0 | 0 | 0 | **0.00%** | 0% | 0.00% | 0 | 0% | 0.00% | 0 | 0% | 0.00% | 0 | 0% | 0.00% | 0 |
| **191** | 100% | 0 | 400 | 150 | 150 | **1.33%** | 0% | 0.00% | 0 | 0% | 0.00% | 0 | 0% | 0.00% | 0 | 0% | 0.00% | 0 |
| **192** | 100% | 0 | 50 | 19 | 19 | **0.17%** | 0% | 0.00% | 0 | 0% | 0.00% | 0 | 0% | 0.00% | 0 | 0% | 0.00% | 0 |
| **193** | 100% | 0 | 350 | 131 | 131 | **1.17%** | 0% | 0.00% | 0 | 0% | 0.00% | 0 | 0% | 0.00% | 0 | 0% | 0.00% | 0 |
| **194** | 100% | 0 | 30 | 11 | 11 | **0.10%** | 0% | 0.00% | 0 | 0% | 0.00% | 0 | 0% | 0.00% | 0 | 0% | 0.00% | 0 |
| **195** | 100% | 45 | 58 | 50 | 50 | **0.44%** | 0% | 0.00% | 0 | 0% | 0.00% | 0 | 0% | 0.00% | 0 | 0% | 0.00% | 0 |
| **196** | 100% | 131 | 172 | 146 | 146 | **1.30%** | 0% | 0.00% | 0 | **60%** | 0.78% | 88 | 0% | 0.00% | 0 | 0% | 0.00% | 0 |
| **197** | 100% | 228 | 274 | 245 | 245 | **2.18%** | 0% | 0.00% | 0 | **60%** | 1.31% | 147 | 0% | 0.00% | 0 | 0% | 0.00% | 0 |
| **198** | 100% | 350 | 497 | 405 | 405 | **3.60%** | **20%** | 0.72% | 81 | 0% | 0.00% | 0 | 0% | 0.00% | 0 | 0% | 0.00% | 0 |
| **199** | 100% | 0 | 450 | 169 | 169 | **1.50%** | **50%** | 0.75% | 85 | 0% | 0.00% | 0 | 0% | 0.00% | 0 | 0% | 0.00% | 0 |
| **200** | 100% | 0 | 200 | 75 | 75 | **0.67%** | 0% | 0.00% | 0 | 0% | 0.00% | 0 | 0% | 0.00% | 0 | **100%** | 0.67% | 75 |
| **201** | 100% | 543 | 544 | 543 | 543 | **4.83%** | 0% | 0.00% | 0 | **60%** | 2.90% | 326 | 0% | 0.00% | 0 | 0% | 0.00% | 0 |
| **202** | 100% | 85 | 119 | 98 | 98 | **0.87%** | 0% | 0.00% | 0 | **20%** | 0.17% | 20 | **50%** | 0.44% | 49 | **30%** | 0.26% | 29 |
| **203** | 100% | 386 | 386 | 386 | 386 | **3.43%** | 0% | 0.00% | 0 | **80%** | 2.75% | 309 | 0% | 0.00% | 0 | 0% | 0.00% | 0 |
| **204** | 100% | 245 | 272 | 255 | 255 | **2.27%** | 0% | 0.00% | 0 | **80%** | 1.81% | 204 | 0% | 0.00% | 0 | 0% | 0.00% | 0 |
| **205** | 60% | 388 | 438 | 407 | 244 | **2.17%** | 0% | 0.00% | 0 | **80%** | 1.74% | 195 | 0% | 0.00% | 0 | 0% | 0.00% | 0 |
| **213** | 50% | 251 | 251 | 251 | 126 | **1.12%** | 0% | 0.00% | 0 | 0% | 0.00% | 0 | 0% | 0.00% | 0 | **100%** | 1.12% | 126 |
| **215** | 100% | 0 | 172 | 65 | 65 | **0.58%** | 0% | 0.00% | 0 | 0% | 0.00% | 0 | 0% | 0.00% | 0 | **100%** | 0.58% | 65 |

# Trip Distribution Table

## Las Soleras, Tracts 18A & 18B

TAZ Population Data for determination of Local Trip Distribution for Proposed **Commercial Trips**

*2015 and 2040 Data Taken from Santa Fe MPO*
*2040 Socioeconomic Forecasts by Data Analysis Subzones for the Santa Fe Metropolitan Planning Area*

| | | | | | | | (WRN) Walking Rain North | | | (RN) Richards Ave. North | | | (BE) Beckner Rd. East | | | (RS) Richards Ave. South | | |
|---|---|---|---|---|---|---|---|---|---|---|---|---|---|---|---|---|---|---|
| **DASZ #** | % Sub Area in Study | 2016 Population | 2040 Population | Interpolated Population for the Year | **Population in Study** | **Percent Population** | % Utilizing | % Population Utilizing | Population | % Utilizing | % Population Utilizing | Population | % Utilizing | % Population Utilizing | Population | % Utilizing | % Population Utilizing | Population |
| | | **2016** | **2040** | **2025** | | | | | | | | | | | | | | |
| Boundary Specified on DASZ Map | | | | | | | | | | | | | | | | | | |
| **217** | 100% | 60 | 260 | 135 | 135 | **1.20%** | 0% | 0.00% | 0 | 0% | 0.00% | 0 | 0% | 0.00% | 0 | **100%** | 1.20% | 135 |
| **218** | 100% | 0 | 0 | 0 | 0 | **0.00%** | 0% | 0.00% | 0 | 0% | 0.00% | 0 | 0% | 0.00% | 0 | **100%** | 0.00% | 0 |
| **219** | 100% | 31 | 101 | 57 | 57 | **0.51%** | 0% | 0.00% | 0 | 0% | 0.00% | 0 | 0% | 0.00% | 0 | **100%** | 0.51% | 57 |
| **221** | 100% | 5 | 126 | 50 | 50 | **0.44%** | 0% | 0.00% | 0 | 0% | 0.00% | 0 | 0% | 0.00% | 0 | **50%** | 0.22% | 25 |
| **222** | 100% | 34 | 64 | 45 | 45 | **0.40%** | 0% | 0.00% | 0 | 0% | 0.00% | 0 | 0% | 0.00% | 0 | **50%** | 0.20% | 23 |
| **223** | 100% | 0 | 0 | 0 | 0 | **0.00%** | 0% | 0.00% | 0 | 0% | 0.00% | 0 | 0% | 0.00% | 0 | **100%** | 0.00% | 0 |
| **224** | 100% | 0 | 13 | 5 | 5 | **0.04%** | 0% | 0.00% | 0 | 0% | 0.00% | 0 | 0% | 0.00% | 0 | **100%** | 0.04% | 5 |
| **225** | 100% | 20 | 270 | 114 | 114 | **1.01%** | 0% | 0.00% | 0 | 0% | 0.00% | 0 | 0% | 0.00% | 0 | **100%** | 1.01% | 114 |
| **226** | 100% | 0 | 0 | 0 | 0 | **0.00%** | 0% | 0.00% | 0 | 0% | 0.00% | 0 | 0% | 0.00% | 0 | **100%** | 0.00% | 0 |
| **227** | 20% | 0 | 0 | 0 | 0 | **0.00%** | 0% | 0.00% | 0 | 0% | 0.00% | 0 | 0% | 0.00% | 0 | **100%** | 0.00% | 0 |
| **241** | 30% | 0 | 0 | 0 | 0 | **0.00%** | 0% | 0.00% | 0 | 0% | 0.00% | 0 | 0% | 0.00% | 0 | **100%** | 0.00% | 0 |
| **246** | 100% | 0 | 0 | 0 | 0 | **0.00%** | 0% | 0.00% | 0 | 0% | 0.00% | 0 | 0% | 0.00% | 0 | **100%** | 0.00% | 0 |
| **247** | 100% | 110 | 110 | 110 | 110 | **0.98%** | 0% | 0.00% | 0 | 0% | 0.00% | 0 | 0% | 0.00% | 0 | **100%** | 0.98% | 110 |
| **248** | 100% | 59 | 59 | 59 | 59 | **0.52%** | 0% | 0.00% | 0 | 0% | 0.00% | 0 | 0% | 0.00% | 0 | **100%** | 0.52% | 59 |
| **249** | 100% | 61 | 61 | 61 | 61 | **0.54%** | 0% | 0.00% | 0 | 0% | 0.00% | 0 | 0% | 0.00% | 0 | **50%** | 0.27% | 31 |
| **250** | 100% | 65 | 65 | 65 | 65 | **0.58%** | 0% | 0.00% | 0 | 0% | 0.00% | 0 | 0% | 0.00% | 0 | **50%** | 0.29% | 33 |
| **251** | 100% | 59 | 159 | 97 | 97 | **0.86%** | 0% | 0.00% | 0 | 0% | 0.00% | 0 | 0% | 0.00% | 0 | **50%** | 0.43% | 49 |
| **252** | 100% | 0 | 163 | 61 | 61 | **0.54%** | 0% | 0.00% | 0 | 0% | 0.00% | 0 | 0% | 0.00% | 0 | **30%** | 0.16% | 18 |
| **253** | 100% | 27 | 100 | 54 | 54 | **0.48%** | 0% | 0.00% | 0 | 0% | 0.00% | 0 | 0% | 0.00% | 0 | **50%** | 0.24% | 27 |
| **254** | 100% | 4 | 150 | 59 | 59 | **0.52%** | 0% | 0.00% | 0 | 0% | 0.00% | 0 | 0% | 0.00% | 0 | 0% | 0.00% | 0 |
| **255** | 20% | 21 | 169 | 77 | 15 | **0.13%** | 0% | 0.00% | 0 | 0% | 0.00% | 0 | 0% | 0.00% | 0 | 0% | 0.00% | 0 |
| **258** | 50% | 0 | 0 | 0 | 0 | **0.00%** | 0% | 0.00% | 0 | 0% | 0.00% | 0 | 0% | 0.00% | 0 | 0% | 0.00% | 0 |
| | | | | 12,913 | 11,241 | 100.00% | | | **166** | | | **1,377** | | | **49** | | | **980** |
| | | | | | | | | | 1.47% | | | 12.25% | | | 0.44% | | | 8.72% |

# Trip Distribution Table

## Las Soleras, Tracts 18A & 18B

TAZ Population Data for determination of Local Trip Distribution for Proposed **Commercial Trips**

*2015 and 2040 Data Taken from Santa Fe MPO*
*2040 Socioeconomic Forecasts by Data Analysis Subzones for the Santa Fe Metropolitan Planning Area*

| | | | | | | | (CS) Cerrillos Rd. South | | |
|---|---|---|---|---|---|---|---|---|---|
| **DASZ #** | % Sub Area in Study | 2016 Population | 2040 Population | Interpolated Population for the Year | **Population in Study** | **Percent Population** | % Utilizing | % Population Utilizing | Population |
| | | **2016** | **2040** | **2025** | | | | | |
| Boundary Specified on DASZ Map | | | | | | | | | |
| **73** | 30% | 942 | 992 | 961 | 288 | **2.56%** | 0% | 0.00% | 0 |
| **75** | 100% | 310 | 478 | 373 | 373 | **3.32%** | 0% | 0.00% | 0 |
| **77** | 100% | 879 | 1096 | 960 | 960 | **8.54%** | 0% | 0.00% | 0 |
| **79** | 100% | 238 | 370 | 288 | 288 | **2.56%** | 0% | 0.00% | 0 |
| **80** | 100% | 176 | 229 | 196 | 196 | **1.74%** | 0% | 0.00% | 0 |
| **81** | 70% | 584 | 699 | 627 | 439 | **3.91%** | 0% | 0.00% | 0 |
| **150** | 90% | 142 | 142 | 142 | 128 | **1.14%** | 0% | 0.00% | 0 |
| **153** | 100% | 82 | 82 | 82 | 82 | **0.73%** | 0% | 0.00% | 0 |
| **154** | 100% | 401 | 416 | 407 | 407 | **3.62%** | 0% | 0.00% | 0 |
| **155** | 100% | 268 | 276 | 271 | 271 | **2.41%** | 0% | 0.00% | 0 |
| **156** | 100% | 0 | 0 | 0 | 0 | **0.00%** | 0% | 0.00% | 0 |
| **172** | 70% | 226 | 2107 | 931 | 652 | **5.80%** | 0% | 0.00% | 0 |
| **175** | 80% | 222 | 320 | 259 | 207 | **1.84%** | 0% | 0.00% | 0 |
| **176** | 100% | 171 | 765 | 394 | 394 | **3.51%** | 0% | 0.00% | 0 |
| **177** | 100% | 0 | 400 | 150 | 150 | **1.33%** | 0% | 0.00% | 0 |
| **178** | 100% | 953 | 1148 | 1,026 | 1,026 | **9.13%** | 0% | 0.00% | 0 |
| **179** | 100% | 522 | 522 | 522 | 522 | **4.64%** | 0% | 0.00% | 0 |
| **180** | 60% | 290 | 290 | 290 | 174 | **1.55%** | 0% | 0.00% | 0 |
| **181** | 100% | 417 | 417 | 417 | 417 | **3.71%** | 0% | 0.00% | 0 |
| **182** | 100% | 0 | 0 | 0 | 0 | **0.00%** | 0% | 0.00% | 0 |
| **183** | 100% | 0 | 0 | 0 | 0 | **0.00%** | 0% | 0.00% | 0 |
| **184** | 100% | 0 | 0 | 0 | 0 | **0.00%** | 0% | 0.00% | 0 |
| **185** | 100% | 28 | 225 | 102 | 102 | **0.91%** | 0% | 0.00% | 0 |
| **186** | 100% | 0 | 0 | 0 | 0 | **0.00%** | 0% | 0.00% | 0 |
| **187** | 100% | 0 | 140 | 53 | 53 | **0.47%** | 0% | 0.00% | 0 |
| **188** | 100% | 7 | 7 | 7 | 7 | **0.06%** | 0% | 0.00% | 0 |
| **189** | 100% | 0 | 0 | 0 | 0 | **0.00%** | 0% | 0.00% | 0 |
| **190** | 100% | 0 | 0 | 0 | 0 | **0.00%** | 0% | 0.00% | 0 |
| **191** | 100% | 0 | 400 | 150 | 150 | **1.33%** | 0% | 0.00% | 0 |
| **192** | 100% | 0 | 50 | 19 | 19 | **0.17%** | 0% | 0.00% | 0 |
| **193** | 100% | 0 | 350 | 131 | 131 | **1.17%** | 0% | 0.00% | 0 |
| **194** | 100% | 0 | 30 | 11 | 11 | **0.10%** | 0% | 0.00% | 0 |
| **195** | 100% | 45 | 58 | 50 | 50 | **0.44%** | 0% | 0.00% | 0 |
| **196** | 100% | 131 | 172 | 146 | 146 | **1.30%** | 0% | 0.00% | 0 |
| **197** | 100% | 228 | 274 | 245 | 245 | **2.18%** | 0% | 0.00% | 0 |
| **198** | 100% | 350 | 497 | 405 | 405 | **3.60%** | 0% | 0.00% | 0 |
| **199** | 100% | 0 | 450 | 169 | 169 | **1.50%** | 0% | 0.00% | 0 |
| **200** | 100% | 0 | 200 | 75 | 75 | **0.67%** | 0% | 0.00% | 0 |
| **201** | 100% | 543 | 544 | 543 | 543 | **4.83%** | 0% | 0.00% | 0 |
| **202** | 100% | 85 | 119 | 98 | 98 | **0.87%** | 0% | 0.00% | 0 |
| **203** | 100% | 386 | 386 | 386 | 386 | **3.43%** | 0% | 0.00% | 0 |
| **204** | 100% | 245 | 272 | 255 | 255 | **2.27%** | 0% | 0.00% | 0 |
| **205** | 60% | 388 | 438 | 407 | 244 | **2.17%** | 0% | 0.00% | 0 |
| **213** | 50% | 251 | 251 | 251 | 126 | **1.12%** | 0% | 0.00% | 0 |
| **215** | 100% | 0 | 172 | 65 | 65 | **0.58%** | 0% | 0.00% | 0 |

# Trip Distribution Table
## Las Soleras, Tracts 18A & 18B

TAZ Population Data for determination of Local Trip Distribution for Proposed **Commercial Trips**

*2015 and 2040 Data Taken from Santa Fe MPO*
*2040 Socioeconomic Forecasts by Data Analysis Subzones for the Santa Fe Metropolitan Planning Area*

| | | | | | | | **(CS)** Cerrillos Rd. South | | |
|---|---|---|---|---|---|---|---|---|---|
| **DASZ #** | % Sub Area in Study | 2016 Population | 2040 Population | Interpolated Population for the Year | **Population in Study** | **Percent Population** | % Utilizing | % Population Utilizing | Population |
| | | **2016** | **2040** | **2025** | | | | | |
| Boundary Specified on DASZ Map | | | | | | | | | |
| **217** | 100% | 60 | 260 | 135 | 135 | **1.20%** | 0% | 0.00% | 0 |
| **218** | 100% | 0 | 0 | 0 | 0 | **0.00%** | 0% | 0.00% | 0 |
| **219** | 100% | 31 | 101 | 57 | 57 | **0.51%** | 0% | 0.00% | 0 |
| **221** | 100% | 5 | 126 | 50 | 50 | **0.44%** | **50%** | 0.22% | 25 |
| **222** | 100% | 34 | 64 | 45 | 45 | **0.40%** | **50%** | 0.20% | 23 |
| **223** | 100% | 0 | 0 | 0 | 0 | **0.00%** | 0% | 0.00% | 0 |
| **224** | 100% | 0 | 13 | 5 | 5 | **0.04%** | 0% | 0.00% | 0 |
| **225** | 100% | 20 | 270 | 114 | 114 | **1.01%** | 0% | 0.00% | 0 |
| **226** | 100% | 0 | 0 | 0 | 0 | **0.00%** | 0% | 0.00% | 0 |
| **227** | 20% | 0 | 0 | 0 | 0 | **0.00%** | 0% | 0.00% | 0 |
| **241** | 30% | 0 | 0 | 0 | 0 | **0.00%** | 0% | 0.00% | 0 |
| **246** | 100% | 0 | 0 | 0 | 0 | **0.00%** | 0% | 0.00% | 0 |
| **247** | 100% | 110 | 110 | 110 | 110 | **0.98%** | 0% | 0.00% | 0 |
| **248** | 100% | 59 | 59 | 59 | 59 | **0.52%** | 0% | 0.00% | 0 |
| **249** | 100% | 61 | 61 | 61 | 61 | **0.54%** | **50%** | 0.27% | 31 |
| **250** | 100% | 65 | 65 | 65 | 65 | **0.58%** | **50%** | 0.29% | 33 |
| **251** | 100% | 59 | 159 | 97 | 97 | **0.86%** | **50%** | 0.43% | 49 |
| **252** | 100% | 0 | 163 | 61 | 61 | **0.54%** | **70%** | 0.38% | 43 |
| **253** | 100% | 27 | 100 | 54 | 54 | **0.48%** | **50%** | 0.24% | 27 |
| **254** | 100% | 4 | 150 | 59 | 59 | **0.52%** | **100%** | 0.52% | 59 |
| **255** | 20% | 21 | 169 | 77 | 15 | **0.13%** | **100%** | 0.13% | 15 |
| **258** | 50% | 0 | 0 | 0 | 0 | **0.00%** | **100%** | 0.00% | 0 |
| | | | | 12,913 | 11,241 | 100.00% | | | **303** |
| | | | | | | | | | 2.69% |

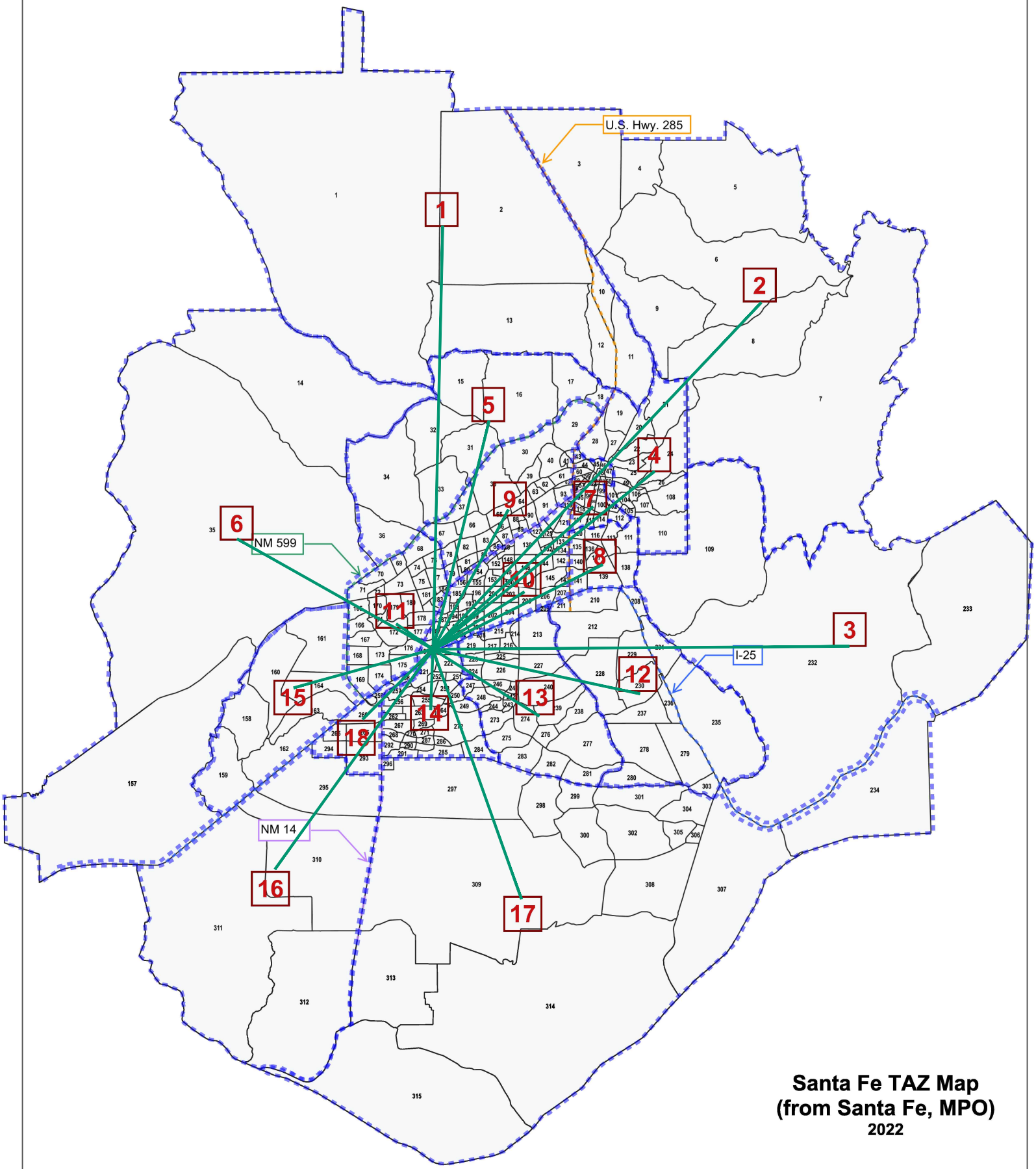


**Santa Fe TAZ Map**
**(from Santa Fe, MPO)**
**2022**

**Las Soleras, Tracts 18A & 18B**
**TAZ Map**

# Trip Distribution Table

**Las Soleras, Tracts 18A & 18B**

**Sub Area Employment Data:**

For determination of Trip Distribution for Proposed **Office Development Trips**

*20165and 2040 Data Taken from Santa Fe MPO 2040 Data Set*

*Socioeconomic Forecasts by Subareas for Santa Fe*

| | | | | | | | | | (HW) Herrera Dr. West | | | (CN) Cerrillos Rd. North | | | (LSN) Las Soleras North | | |
|---|---|---|---|---|---|---|---|---|---|---|---|---|---|---|---|---|---|
| **Sub Area I.D.#** | **% Sub Area in Study** | **2015 Employment** | **2040 Employment** | **Interpolated Employment for the Year** | Employment in Study | Dist. (Mi.) | **Employment / Distance** | **% Employment / Distance** | % Utilizing | % Employment / Dist. Utilizing | Employment | % Utilizing | % Employment / Dist. Utilizing | Employment | % Utilizing | % Employment / Dist. Utilizing | Employment |
| | | **2015** | **2040** | **2025** | | | | | | | | | | | | | |
| **1** | 100% | 1,199 | 1,249 | 1,219 | 1,219 | 13.1 | **93** | **0.61%** | 0% | 0.00% | 0 | 80% | 0.49% | 74 | 0% | 0.00% | 0 |
| **2** | 100% | 1,168 | 1,188 | 1,176 | 1,176 | 14.9 | **79** | **0.52%** | 0% | 0.00% | 0 | 50% | 0.26% | 39 | 0% | 0.00% | 0 |
| **3** | 100% | 1,102 | 1,102 | 1,102 | 1,102 | 12.8 | **86** | **0.56%** | 0% | 0.00% | 0 | 0% | 0.00% | 0 | 0% | 0.00% | 0 |
| **4** | 100% | 5,960 | 5,960 | 5,960 | 5,960 | 9.3 | **641** | **4.19%** | 0% | 0.00% | 0 | 100% | 4.19% | 641 | 0% | 0.00% | 0 |
| **5** | 100% | 1,731 | 2,212 | 1,923 | 1,923 | 7.8 | **247** | **1.61%** | 0% | 0.00% | 0 | 100% | 1.61% | 247 | 0% | 0.00% | 0 |
| **6** | 100% | 579 | 779 | 659 | 659 | 6.3 | **105** | **0.68%** | 0% | 0.00% | 0 | 0% | 0.00% | 0 | 0% | 0.00% | 0 |
| **7** | 100% | 4,544 | 4,544 | 4,544 | 4,544 | 7.4 | **614** | **4.02%** | 0% | 0.00% | 0 | 100% | 4.02% | 614 | 0% | 0.00% | 0 |
| **8** | 100% | 2,698 | 2,718 | 2,706 | 2,706 | 6.6 | **410** | **2.68%** | 0% | 0.00% | 0 | 50% | 1.34% | 205 | 0% | 0.00% | 0 |
| **9** | 100% | 9,308 | 10,261 | 9,689 | 9,689 | 16.5 | **587** | **3.84%** | 0% | 0.00% | 0 | 100% | 3.84% | 587 | 0% | 0.00% | 0 |
| **10** | 100% | 10,181 | 12,525 | 11,119 | 11,119 | 4.2 | **2,647** | **17.33%** | 0% | 0.00% | 0 | 45% | 7.80% | 1,191 | 0% | 0.00% | 0 |
| **11** | 100% | 8,371 | 14,219 | 10,710 | 10,710 | 1.6 | **6,694** | **43.82%** | 30% | 13.15% | 2,008 | 70% | 30.67% | 4,686 | 0% | 0.00% | 0 |
| **12** | 100% | 1,175 | 1,300 | 1,225 | 1,225 | 6.8 | **180** | **1.18%** | 0% | 0.00% | 0 | 0% | 0.00% | 0 | 0% | 0.00% | 0 |
| **13** | 100% | 1,339 | 2,487 | 1,798 | 1,798 | 4 | **450** | **2.94%** | 0% | 0.00% | 0 | 0% | 0.00% | 0 | 0% | 0.00% | 0 |
| **14** | 100% | 654 | 2,100 | 1,232 | 1,232 | 1.2 | **1,027** | **6.72%** | 0% | 0.00% | 0 | 0% | 0.00% | 0 | 0% | 0.00% | 0 |
| **15** | 100% | 1,211 | 1,281 | 1,239 | 1,239 | 3.3 | **375** | **2.46%** | 0% | 0.00% | 0 | 0% | 0.00% | 0 | 0% | 0.00% | 0 |
| **16** | 100% | 612 | 612 | 612 | 612 | 6.7 | **91** | **0.60%** | 0% | 0.00% | 0 | 0% | 0.00% | 0 | 0% | 0.00% | 0 |
| **17** | 100% | 4,362 | 4,535 | 4,431 | 4,431 | 7.2 | **615** | **4.03%** | 0% | 0.00% | 0 | 0% | 0.00% | 0 | 0% | 0.00% | 0 |
| **18** | 100% | 490 | 690 | 570 | 570 | 1.7 | **335** | **2.19%** | 0% | 0.00% | 0 | 0% | 0.00% | 0 | 0% | 0.00% | 0 |
| | | 56,684 | 69,762 | 61,915 | 61,915 | | **15,277** | **100.00%** | | 13.15% | **2,008** | | 54.23% | **8,285** | | 0.00% | **0** |
| | | | | | | | | | | | 13.15% | | | 54.23% | | | 0.00% |

* - Subarea in which the site it located.

# Trip Distribution Table

**Las Soleras, Tracts 18A & 18B**

**Sub Area Employment Data:**

For determination of Trip Distribution for Proposed **Office Development Trips**

*20165and 2040 Data Taken from Santa Fe MPO 2040 Data Set*

*Socioeconomic Forecasts by Subareas for Santa Fe*

| | | | | | | | | | **(RRN)** Ral Runner North | | | **(WRN)** Walking Rain North | | | **(RN)** Richards Ave. North | | |
|---|---|---|---|---|---|---|---|---|---|---|---|---|---|---|---|---|---|
| **Sub Area I.D.#** | **% Sub Area in Study** | **2015 Employment** | **2040 Employment** | **Interpolated Employment for the Year** | Employment in Study | Dist. (Mi.) | **Employment / Distance** | **% Employment / Distance** | % Utilizing | % Employment / Dist. Utilizing | Employment | % Utilizing | % Employment / Dist. Utilizing | Employment | % Utilizing | % Employment / Dist. Utilizing | Employment |
| | | **2015** | **2040** | **2025** | | | | | | | | | | | | | |
| **1** | 100% | 1,199 | 1,249 | 1,219 | 1,219 | 13.1 | **93** | **0.61%** | 0% | 0.00% | 0 | 0% | 0.00% | 0 | 20% | 0.12% | 19 |
| **2** | 100% | 1,168 | 1,188 | 1,176 | 1,176 | 14.9 | **79** | **0.52%** | 0% | 0.00% | 0 | 0% | 0.00% | 0 | 50% | 0.26% | 39 |
| **3** | 100% | 1,102 | 1,102 | 1,102 | 1,102 | 12.8 | **86** | **0.56%** | 0% | 0.00% | 0 | 0% | 0.00% | 0 | 70% | 0.39% | 60 |
| **4** | 100% | 5,960 | 5,960 | 5,960 | 5,960 | 9.3 | **641** | **4.19%** | 0% | 0.00% | 0 | 0% | 0.00% | 0 | 0% | 0.00% | 0 |
| **5** | 100% | 1,731 | 2,212 | 1,923 | 1,923 | 7.8 | **247** | **1.61%** | 0% | 0.00% | 0 | 0% | 0.00% | 0 | 0% | 0.00% | 0 |
| **6** | 100% | 579 | 779 | 659 | 659 | 6.3 | **105** | **0.68%** | 0% | 0.00% | 0 | 0% | 0.00% | 0 | 0% | 0.00% | 0 |
| **7** | 100% | 4,544 | 4,544 | 4,544 | 4,544 | 7.4 | **614** | **4.02%** | 0% | 0.00% | 0 | 0% | 0.00% | 0 | 0% | 0.00% | 0 |
| **8** | 100% | 2,698 | 2,718 | 2,706 | 2,706 | 6.6 | **410** | **2.68%** | 0% | 0.00% | 0 | 0% | 0.00% | 0 | 50% | 1.34% | 205 |
| **9** | 100% | 9,308 | 10,261 | 9,689 | 9,689 | 16.5 | **587** | **3.84%** | 0% | 0.00% | 0 | 0% | 0.00% | 0 | 0% | 0.00% | 0 |
| **10** | 100% | 10,181 | 12,525 | 11,119 | 11,119 | 4.2 | **2,647** | **17.33%** | 0% | 0.00% | 0 | 5% | 0.87% | 132 | 45% | 7.80% | 1,191 |
| **11** | 100% | 8,371 | 14,219 | 10,710 | 10,710 | 1.6 | **6,694** | **43.82%** | 0% | 0.00% | 0 | 0% | 0.00% | 0 | 0% | 0.00% | 0 |
| **12** | 100% | 1,175 | 1,300 | 1,225 | 1,225 | 6.8 | **180** | **1.18%** | 0% | 0.00% | 0 | 0% | 0.00% | 0 | 0% | 0.00% | 0 |
| **13** | 100% | 1,339 | 2,487 | 1,798 | 1,798 | 4 | **450** | **2.94%** | 0% | 0.00% | 0 | 0% | 0.00% | 0 | 0% | 0.00% | 0 |
| **14** | 100% | 654 | 2,100 | 1,232 | 1,232 | 1.2 | **1,027** | **6.72%** | 0% | 0.00% | 0 | 0% | 0.00% | 0 | 0% | 0.00% | 0 |
| **15** | 100% | 1,211 | 1,281 | 1,239 | 1,239 | 3.3 | **375** | **2.46%** | 0% | 0.00% | 0 | 0% | 0.00% | 0 | 0% | 0.00% | 0 |
| **16** | 100% | 612 | 612 | 612 | 612 | 6.7 | **91** | **0.60%** | 0% | 0.00% | 0 | 0% | 0.00% | 0 | 0% | 0.00% | 0 |
| **17** | 100% | 4,362 | 4,535 | 4,431 | 4,431 | 7.2 | **615** | **4.03%** | 0% | 0.00% | 0 | 0% | 0.00% | 0 | 0% | 0.00% | 0 |
| **18** | 100% | 490 | 690 | 570 | 570 | 1.7 | **335** | **2.19%** | 0% | 0.00% | 0 | 0% | 0.00% | 0 | 0% | 0.00% | 0 |
| | | 56,684 | 69,762 | 61,915 | 61,915 | | **15,277** | **100.00%** | | 0.00% | **0** | | 0.87% | **132** | | 9.91% | **1,515** |
| | | | | | | | | | | | 0.00% | | | 0.87% | | | 9.91% |

* - Subarea in which the site it located.

# Trip Distribution Table

**Las Soleras, Tracts 18A & 18B**

**Sub Area Employment Data:**

For determination of Trip Distribution for Proposed **Office Development Trips**

*20165and 2040 Data Taken from Santa Fe MPO 2040 Data Set*

*Socioeconomic Forecasts by Subareas for Santa Fe*

| | | | | | | | | | (BE) Beckner Rd. East | | | (RS) Richards Ave. South | | | (CS) Cerrillos Rd. South | | |
|---|---|---|---|---|---|---|---|---|---|---|---|---|---|---|---|---|---|
| **Sub Area I.D.#** | **% Sub Area in Study** | **2015 Employment** | **2040 Employment** | **Interpolated Employment for the Year** | Employment in Study | Dist. (Mi.) | **Employment / Distance** | **% Employment / Distance** | % Utilizing | % Employment / Dist. Utilizing | Employment | % Utilizing | % Employment / Dist. Utilizing | Employment | % Utilizing | % Employment / Dist. Utilizing | Employment |
| | | **2015** | **2040** | **2025** | | | | | | | | | | | | | |
| **1** | 100% | 1,199 | 1,249 | 1,219 | 1,219 | 13.1 | **93** | **0.61%** | 0% | 0.00% | 0 | 0% | 0.00% | 0 | 0% | 0.00% | 0 |
| **2** | 100% | 1,168 | 1,188 | 1,176 | 1,176 | 14.9 | **79** | **0.52%** | 0% | 0.00% | 0 | 0% | 0.00% | 0 | 0% | 0.00% | 0 |
| **3** | 100% | 1,102 | 1,102 | 1,102 | 1,102 | 12.8 | **86** | **0.56%** | 0% | 0.00% | 0 | 0% | 0.00% | 0 | 30% | 0.17% | 26 |
| **4** | 100% | 5,960 | 5,960 | 5,960 | 5,960 | 9.3 | **641** | **4.19%** | 0% | 0.00% | 0 | 0% | 0.00% | 0 | 0% | 0.00% | 0 |
| **5** | 100% | 1,731 | 2,212 | 1,923 | 1,923 | 7.8 | **247** | **1.61%** | 0% | 0.00% | 0 | 0% | 0.00% | 0 | 0% | 0.00% | 0 |
| **6** | 100% | 579 | 779 | 659 | 659 | 6.3 | **105** | **0.68%** | 0% | 0.00% | 0 | 0% | 0.00% | 0 | 100% | 0.68% | 105 |
| **7** | 100% | 4,544 | 4,544 | 4,544 | 4,544 | 7.4 | **614** | **4.02%** | 0% | 0.00% | 0 | 0% | 0.00% | 0 | 0% | 0.00% | 0 |
| **8** | 100% | 2,698 | 2,718 | 2,706 | 2,706 | 6.6 | **410** | **2.68%** | 0% | 0.00% | 0 | 0% | 0.00% | 0 | 0% | 0.00% | 0 |
| **9** | 100% | 9,308 | 10,261 | 9,689 | 9,689 | 16.5 | **587** | **3.84%** | 0% | 0.00% | 0 | 0% | 0.00% | 0 | 0% | 0.00% | 0 |
| **10** | 100% | 10,181 | 12,525 | 11,119 | 11,119 | 4.2 | **2,647** | **17.33%** | 5% | 0.87% | 132 | 0% | 0.00% | 0 | 0% | 0.00% | 0 |
| **11** | 100% | 8,371 | 14,219 | 10,710 | 10,710 | 1.6 | **6,694** | **43.82%** | 0% | 0.00% | 0 | 0% | 0.00% | 0 | 0% | 0.00% | 0 |
| **12** | 100% | 1,175 | 1,300 | 1,225 | 1,225 | 6.8 | **180** | **1.18%** | 0% | 0.00% | 0 | 30% | 0.35% | 54 | 70% | 0.83% | 126 |
| **13** | 100% | 1,339 | 2,487 | 1,798 | 1,798 | 4 | **450** | **2.94%** | 0% | 0.00% | 0 | 50% | 1.47% | 225 | 50% | 1.47% | 225 |
| **14** | 100% | 654 | 2,100 | 1,232 | 1,232 | 1.2 | **1,027** | **6.72%** | 0% | 0.00% | 0 | 30% | 2.02% | 308 | 70% | 4.71% | 719 |
| **15** | 100% | 1,211 | 1,281 | 1,239 | 1,239 | 3.3 | **375** | **2.46%** | 0% | 0.00% | 0 | 0% | 0.00% | 0 | 100% | 2.46% | 375 |
| **16** | 100% | 612 | 612 | 612 | 612 | 6.7 | **91** | **0.60%** | 0% | 0.00% | 0 | 50% | 0.30% | 46 | 50% | 0.30% | 46 |
| **17** | 100% | 4,362 | 4,535 | 4,431 | 4,431 | 7.2 | **615** | **4.03%** | 0% | 0.00% | 0 | 0% | 0.00% | 0 | 100% | 4.03% | 615 |
| **18** | 100% | 490 | 690 | 570 | 570 | 1.7 | **335** | **2.19%** | 0% | 0.00% | 0 | 0% | 0.00% | 0 | 100% | 2.19% | 335 |
| | | 56,684 | 69,762 | 61,915 | 61,915 | | **15,277** | **100.00%** | | 0.87% | **132** | | 4.14% | **633** | | 16.84% | **2,572** |
| | | | | | | | | | | | 0.87% | | | 4.14% | | | 16.84% |

* - Subarea in which the site it located.

# Trip Distribution Table

**Las Soleras, Tracts 18A & 18B**

**Sub Area Employment Data:**
For determination of Trip Distribution for Proposed **Residential Development Trips**

*20165and 2040 Data Taken from Santa Fe MPO 2040 Data Set*
*Socioeconomic Forecasts by Subareas for Santa Fe*

| | | | | | | | | | (HW) Herrera Dr. West | | | (CN) Cerrillos Rd. North | | | (LSN) Las Soleras North | | |
|---|---|---|---|---|---|---|---|---|---|---|---|---|---|---|---|---|---|
| **Sub Area I.D.#** | **% Sub Area in Study** | **2015 Employment** | **2040 Employment** | **Interpolated Employment for the Year** | Employment in Study | Dist. (Mi.) | **Employment / Distance** | **% Employment / Distance** | % Utilizing | % Employment / Dist. Utilizing | Employment | % Utilizing | % Employment / Dist. Utilizing | Employment | % Utilizing | % Employment / Dist. Utilizing | Employment |
| | | **2015** | **2040** | **2025** | | | | | | | | | | | | | |
| **1** | 100% | 508 | 510 | 509 | 509 | 13.1 | **39** | **0.32%** | 0% | 0.00% | 0 | 80% | 0.25% | 31 | 0% | 0.00% | 0 |
| **2** | 100% | 553 | 556 | 554 | 554 | 14.9 | **37** | **0.30%** | 0% | 0.00% | 0 | 50% | 0.15% | 19 | 0% | 0.00% | 0 |
| **3** | 100% | 101 | 101 | 101 | 101 | 12.8 | **8** | **0.06%** | 0% | 0.00% | 0 | 0% | 0.00% | 0 | 0% | 0.00% | 0 |
| **4** | 100% | 2,074 | 2,074 | 2,074 | 2,074 | 9.3 | **223** | **1.82%** | 0% | 0.00% | 0 | 100% | 1.82% | 223 | 0% | 0.00% | 0 |
| **5** | 100% | 476 | 574 | 515 | 515 | 7.8 | **66** | **0.54%** | 0% | 0.00% | 0 | 100% | 0.54% | 66 | 0% | 0.00% | 0 |
| **6** | 100% | 259 | 463 | 341 | 341 | 6.3 | **54** | **0.44%** | 0% | 0.00% | 0 | 0% | 0.00% | 0 | 0% | 0.00% | 0 |
| **7** | 100% | 19,795 | 19,795 | 19,795 | 19,795 | 7.4 | **2,675** | **21.79%** | 0% | 0.00% | 0 | 100% | 21.79% | 2,675 | 0% | 0.00% | 0 |
| **8** | 100% | 5,579 | 5,582 | 5,580 | 5,580 | 6.6 | **845** | **6.89%** | 0% | 0.00% | 0 | 50% | 3.44% | 423 | 0% | 0.00% | 0 |
| **9** | 100% | 6,135 | 6,284 | 6,195 | 6,195 | 16.5 | **375** | **3.06%** | 0% | 0.00% | 0 | 100% | 3.06% | 375 | 0% | 0.00% | 0 |
| **10** | 100% | 12,895 | 17,616 | 14,783 | 14,783 | 4.2 | **3,520** | **28.67%** | 0% | 0.00% | 0 | 45% | 12.90% | 1,584 | 0% | 0.00% | 0 |
| **11** | 100% | 2,719 | 5,714 | 3,917 | 3,917 | 1.6 | **2,448** | **19.94%** | 30% | 5.98% | 734 | 70% | 13.96% | 1,714 | 0% | 0.00% | 0 |
| **12** | 100% | 540 | 641 | 580 | 580 | 6.8 | **85** | **0.70%** | 0% | 0.00% | 0 | 0% | 0.00% | 0 | 0% | 0.00% | 0 |
| **13** | 100% | 555 | 870 | 681 | 681 | 4 | **170** | **1.39%** | 0% | 0.00% | 0 | 0% | 0.00% | 0 | 0% | 0.00% | 0 |
| **14** | 100% | 1,164 | 1,613 | 1,344 | 1,344 | 1.2 | **1,120** | **9.12%** | 0% | 0.00% | 0 | 0% | 0.00% | 0 | 0% | 0.00% | 0 |
| **15** | 100% | 265 | 1,651 | 819 | 819 | 3.3 | **248** | **2.02%** | 0% | 0.00% | 0 | 0% | 0.00% | 0 | 0% | 0.00% | 0 |
| **16** | 100% | 91 | 91 | 91 | 91 | 6.7 | **14** | **0.11%** | 0% | 0.00% | 0 | 0% | 0.00% | 0 | 0% | 0.00% | 0 |
| **17** | 100% | 1,452 | 1,630 | 1,523 | 1,523 | 7.2 | **212** | **1.72%** | 0% | 0.00% | 0 | 0% | 0.00% | 0 | 0% | 0.00% | 0 |
| **18** | 100% | 197 | 296 | 237 | 237 | 1.7 | **139** | **1.13%** | 0% | 0.00% | 0 | 0% | 0.00% | 0 | 0% | 0.00% | 0 |
| | | 55,358 | 66,061 | 59,639 | 59,639 | | **12,279** | **100.00%** | | 5.98% | **734** | | 57.90% | **7,110** | | 0.00% | **0** |
| | | | | | | | | | | | 5.98% | | | 57.90% | | | 0.00% |

* - Subarea in which the site it located.

# Trip Distribution Table

**Las Soleras, Tracts 18A & 18B**

**Sub Area Employment Data:**
For determination of Trip Distribution for Proposed **Residential Development Trips**

*20165and 2040 Data Taken from Santa Fe MPO 2040 Data Set*
*Socioeconomic Forecasts by Subareas for Santa Fe*

| | | | | | | | | | **(RRN)** Ral Runner North | | | **(WRN)** Walking Rain North | | | **(RN)** Richards Ave. North | | |
|---|---|---|---|---|---|---|---|---|---|---|---|---|---|---|---|---|---|
| **Sub Area I.D.#** | **% Sub Area in Study** | **2015 Employment** | **2040 Employment** | **Interpolated Employment for the Year** | Employment in Study | Dist. (Mi.) | **Employment / Distance** | **% Employment / Distance** | % Utilizing | % Employment / Dist. Utilizing | Employment | % Utilizing | % Employment / Dist. Utilizing | Employment | % Utilizing | % Employment / Dist. Utilizing | Employment |
| | | **2015** | **2040** | **2025** | | | | | | | | | | | | | |
| **1** | 100% | 508 | 510 | 509 | 509 | 13.1 | **39** | **0.32%** | 0% | 0.00% | 0 | 0% | 0.00% | 0 | 20% | 0.06% | 8 |
| **2** | 100% | 553 | 556 | 554 | 554 | 14.9 | **37** | **0.30%** | 0% | 0.00% | 0 | 0% | 0.00% | 0 | 50% | 0.15% | 19 |
| **3** | 100% | 101 | 101 | 101 | 101 | 12.8 | **8** | **0.06%** | 0% | 0.00% | 0 | 0% | 0.00% | 0 | 70% | 0.04% | 6 |
| **4** | 100% | 2,074 | 2,074 | 2,074 | 2,074 | 9.3 | **223** | **1.82%** | 0% | 0.00% | 0 | 0% | 0.00% | 0 | 0% | 0.00% | 0 |
| **5** | 100% | 476 | 574 | 515 | 515 | 7.8 | **66** | **0.54%** | 0% | 0.00% | 0 | 0% | 0.00% | 0 | 0% | 0.00% | 0 |
| **6** | 100% | 259 | 463 | 341 | 341 | 6.3 | **54** | **0.44%** | 0% | 0.00% | 0 | 0% | 0.00% | 0 | 0% | 0.00% | 0 |
| **7** | 100% | 19,795 | 19,795 | 19,795 | 19,795 | 7.4 | **2,675** | **21.79%** | 0% | 0.00% | 0 | 0% | 0.00% | 0 | 0% | 0.00% | 0 |
| **8** | 100% | 5,579 | 5,582 | 5,580 | 5,580 | 6.6 | **845** | **6.89%** | 0% | 0.00% | 0 | 0% | 0.00% | 0 | 50% | 3.44% | 423 |
| **9** | 100% | 6,135 | 6,284 | 6,195 | 6,195 | 16.5 | **375** | **3.06%** | 0% | 0.00% | 0 | 0% | 0.00% | 0 | 0% | 0.00% | 0 |
| **10** | 100% | 12,895 | 17,616 | 14,783 | 14,783 | 4.2 | **3,520** | **28.67%** | 0% | 0.00% | 0 | 5% | 1.43% | 176 | 45% | 12.90% | 1,584 |
| **11** | 100% | 2,719 | 5,714 | 3,917 | 3,917 | 1.6 | **2,448** | **19.94%** | 0% | 0.00% | 0 | 0% | 0.00% | 0 | 0% | 0.00% | 0 |
| **12** | 100% | 540 | 641 | 580 | 580 | 6.8 | **85** | **0.70%** | 0% | 0.00% | 0 | 0% | 0.00% | 0 | 0% | 0.00% | 0 |
| **13** | 100% | 555 | 870 | 681 | 681 | 4 | **170** | **1.39%** | 0% | 0.00% | 0 | 0% | 0.00% | 0 | 0% | 0.00% | 0 |
| **14** | 100% | 1,164 | 1,613 | 1,344 | 1,344 | 1.2 | **1,120** | **9.12%** | 0% | 0.00% | 0 | 0% | 0.00% | 0 | 0% | 0.00% | 0 |
| **15** | 100% | 265 | 1,651 | 819 | 819 | 3.3 | **248** | **2.02%** | 0% | 0.00% | 0 | 0% | 0.00% | 0 | 0% | 0.00% | 0 |
| **16** | 100% | 91 | 91 | 91 | 91 | 6.7 | **14** | **0.11%** | 0% | 0.00% | 0 | 0% | 0.00% | 0 | 0% | 0.00% | 0 |
| **17** | 100% | 1,452 | 1,630 | 1,523 | 1,523 | 7.2 | **212** | **1.72%** | 0% | 0.00% | 0 | 0% | 0.00% | 0 | 0% | 0.00% | 0 |
| **18** | 100% | 197 | 296 | 237 | 237 | 1.7 | **139** | **1.13%** | 0% | 0.00% | 0 | 0% | 0.00% | 0 | 0% | 0.00% | 0 |
| | | 55,358 | 66,061 | 59,639 | 59,639 | | **12,279** | **100.00%** | | 0.00% | **0** | | 1.43% | **176** | | 16.60% | **2,039** |
| | | | | | | | | | | | 0.00% | | | 1.43% | | | 16.60% |

* - Subarea in which the site it located.

# Trip Distribution Table

**Las Soleras, Tracts 18A & 18B**

**Sub Area Employment Data:**
For determination of Trip Distribution for Proposed **Residential Development Trips**

*20165and 2040 Data Taken from Santa Fe MPO 2040 Data Set*
*Socioeconomic Forecasts by Subareas for Santa Fe*

| | | | | | | | | | (BE) Beckner Rd. East | | | (RS) Richards Ave. South | | | (CS) Cerrillos Rd. South | | |
|---|---|---|---|---|---|---|---|---|---|---|---|---|---|---|---|---|---|
| **Sub Area I.D.#** | **% Sub Area in Study** | **2015 Employment** | **2040 Employment** | **Interpolated Employment for the Year** | Employment in Study | Dist. (Mi.) | **Employment / Distance** | **% Employment / Distance** | % Utilizing | % Employment / Dist. Utilizing | Employment | % Utilizing | % Employment / Dist. Utilizing | Employment | % Utilizing | % Employment / Dist. Utilizing | Employment |
| | | **2015** | **2040** | **2025** | | | | | | | | | | | | | |
| **1** | 100% | 508 | 510 | 509 | 509 | 13.1 | **39** | **0.32%** | 0% | 0.00% | 0 | 0% | 0.00% | 0 | 0% | 0.00% | 0 |
| **2** | 100% | 553 | 556 | 554 | 554 | 14.9 | **37** | **0.30%** | 0% | 0.00% | 0 | 0% | 0.00% | 0 | 0% | 0.00% | 0 |
| **3** | 100% | 101 | 101 | 101 | 101 | 12.8 | **8** | **0.06%** | 0% | 0.00% | 0 | 0% | 0.00% | 0 | 30% | 0.02% | 2 |
| **4** | 100% | 2,074 | 2,074 | 2,074 | 2,074 | 9.3 | **223** | **1.82%** | 0% | 0.00% | 0 | 0% | 0.00% | 0 | 0% | 0.00% | 0 |
| **5** | 100% | 476 | 574 | 515 | 515 | 7.8 | **66** | **0.54%** | 0% | 0.00% | 0 | 0% | 0.00% | 0 | 0% | 0.00% | 0 |
| **6** | 100% | 259 | 463 | 341 | 341 | 6.3 | **54** | **0.44%** | 0% | 0.00% | 0 | 0% | 0.00% | 0 | 100% | 0.44% | 54 |
| **7** | 100% | 19,795 | 19,795 | 19,795 | 19,795 | 7.4 | **2,675** | **21.79%** | 0% | 0.00% | 0 | 0% | 0.00% | 0 | 0% | 0.00% | 0 |
| **8** | 100% | 5,579 | 5,582 | 5,580 | 5,580 | 6.6 | **845** | **6.89%** | 0% | 0.00% | 0 | 0% | 0.00% | 0 | 0% | 0.00% | 0 |
| **9** | 100% | 6,135 | 6,284 | 6,195 | 6,195 | 16.5 | **375** | **3.06%** | 0% | 0.00% | 0 | 0% | 0.00% | 0 | 0% | 0.00% | 0 |
| **10** | 100% | 12,895 | 17,616 | 14,783 | 14,783 | 4.2 | **3,520** | **28.67%** | 5% | 1.43% | 176 | 0% | 0.00% | 0 | 0% | 0.00% | 0 |
| **11** | 100% | 2,719 | 5,714 | 3,917 | 3,917 | 1.6 | **2,448** | **19.94%** | 0% | 0.00% | 0 | 0% | 0.00% | 0 | 0% | 0.00% | 0 |
| **12** | 100% | 540 | 641 | 580 | 580 | 6.8 | **85** | **0.70%** | 0% | 0.00% | 0 | 30% | 0.21% | 26 | 70% | 0.49% | 60 |
| **13** | 100% | 555 | 870 | 681 | 681 | 4 | **170** | **1.39%** | 0% | 0.00% | 0 | 50% | 0.69% | 85 | 50% | 0.69% | 85 |
| **14** | 100% | 1,164 | 1,613 | 1,344 | 1,344 | 1.2 | **1,120** | **9.12%** | 0% | 0.00% | 0 | 30% | 2.74% | 336 | 70% | 6.38% | 784 |
| **15** | 100% | 265 | 1,651 | 819 | 819 | 3.3 | **248** | **2.02%** | 0% | 0.00% | 0 | 0% | 0.00% | 0 | 100% | 2.02% | 248 |
| **16** | 100% | 91 | 91 | 91 | 91 | 6.7 | **14** | **0.11%** | 0% | 0.00% | 0 | 50% | 0.06% | 7 | 50% | 0.06% | 7 |
| **17** | 100% | 1,452 | 1,630 | 1,523 | 1,523 | 7.2 | **212** | **1.72%** | 0% | 0.00% | 0 | 0% | 0.00% | 0 | 100% | 1.72% | 212 |
| **18** | 100% | 197 | 296 | 237 | 237 | 1.7 | **139** | **1.13%** | 0% | 0.00% | 0 | 0% | 0.00% | 0 | 100% | 1.13% | 139 |
| | | 55,358 | 66,061 | 59,639 | 59,639 | | **12,279** | **100.00%** | | 1.43% | **176** | | 3.69% | **453** | | 12.96% | **1,591** |
| | | | | | | | | | | | 1.43% | | | 3.69% | | | 12.96% |

* - Subarea in which the site it located.

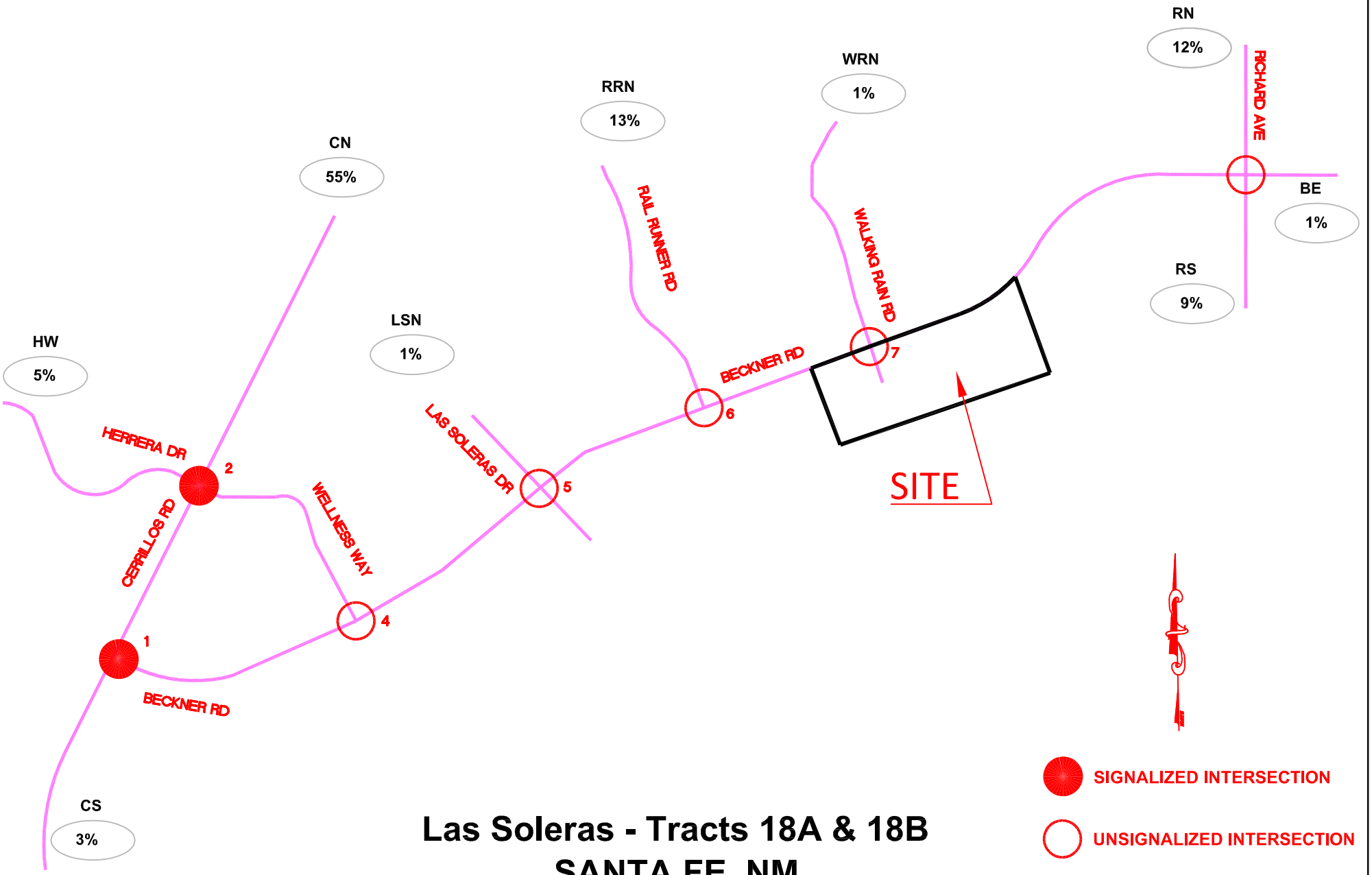


# Las Soleras - Tracts 18A & 18B
# SANTA FE, NM
## (BECKNER RD / WALKING RAIN RD.)
## Trip Distribution Map (%)
## COMMERCIAL

TIERRA WEST, LLC
5571 MIDWAY PARK PLACE NE
ALBUQUERQUE, NEW MEXICO 87109
(505)858-3100

A-27

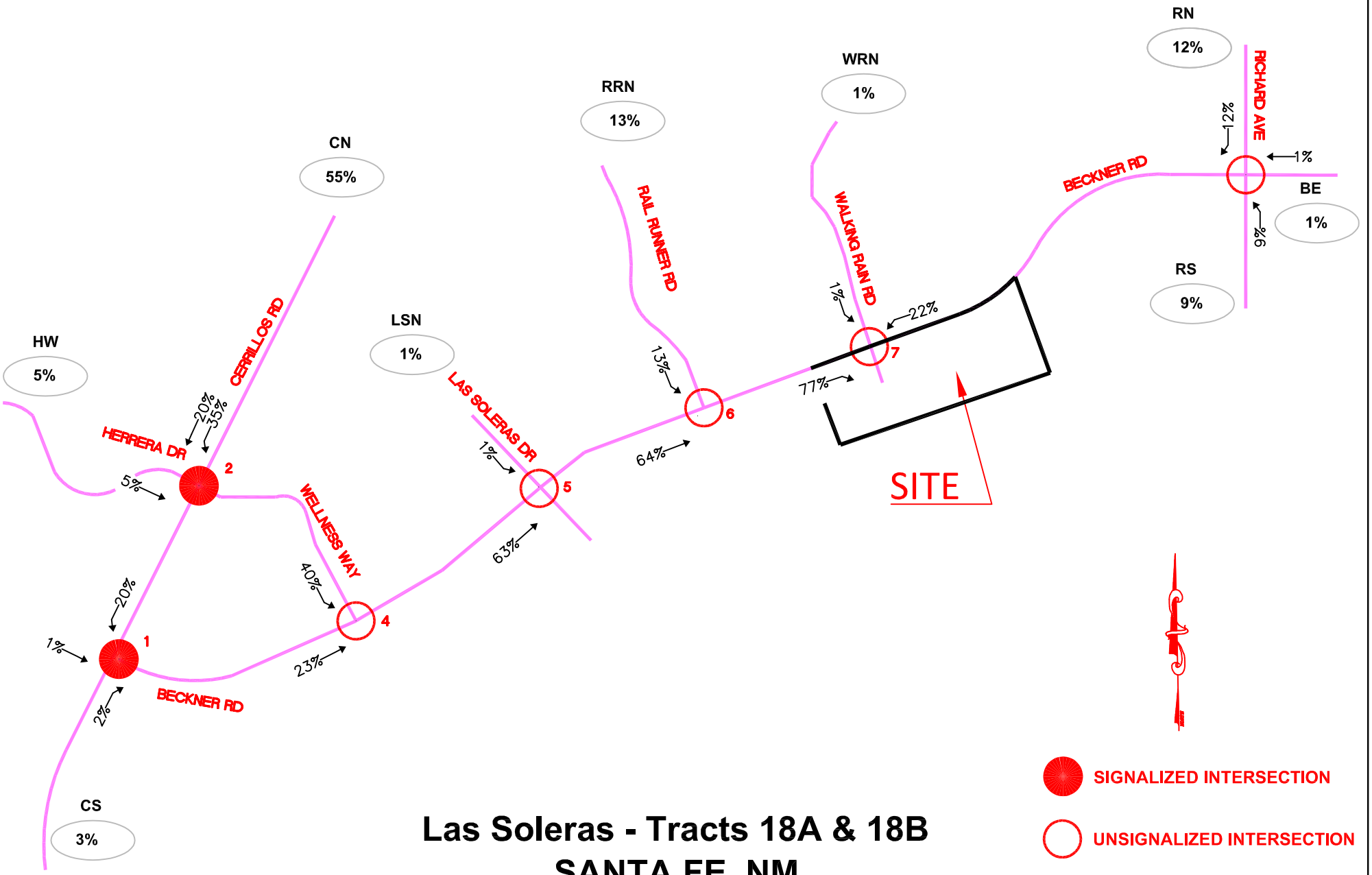


# Las Soleras - Tracts 18A & 18B
# SANTA FE, NM
## (BECKNER RD / WALKING RAIN RD.)
## Trip Assignments Map (% Entering)
## COMMERCIAL


TIERRA WEST, LLC
5571 MIDWAY PARK PLACE NE
ALBUQUERQUE, NEW MEXICO 87109
(505)858-3100


A-28

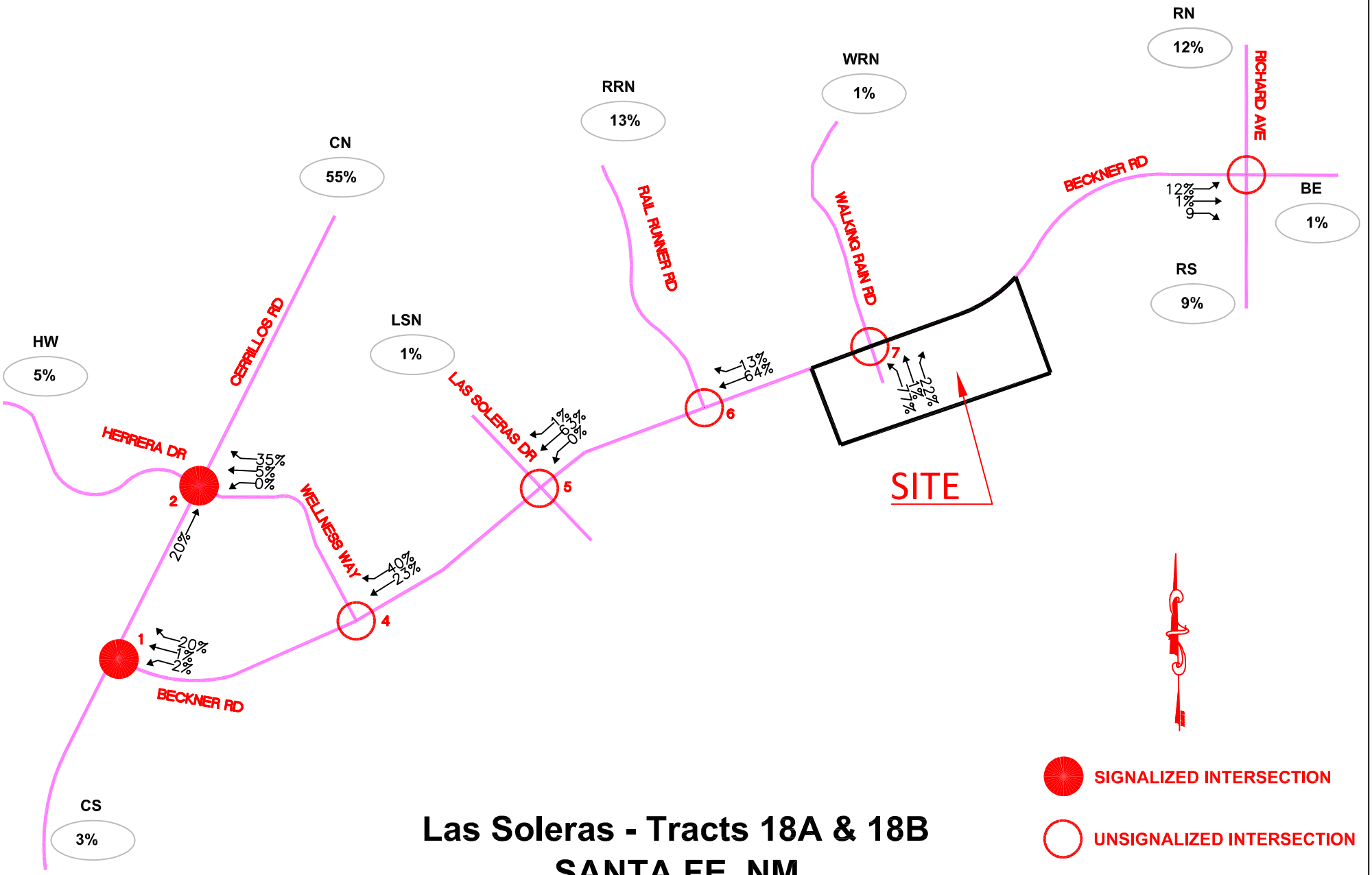


# Las Soleras - Tracts 18A & 18B
# SANTA FE, NM
## (BECKNER RD / WALKING RAIN RD.)
## Trip Assignments Map (% Exiting)
## COMMERCIAL

TIERRA WEST, LLC
5571 MIDWAY PARK PLACE NE
ALBUQUERQUE, NEW MEXICO 87109
(505)858-3100

A-29

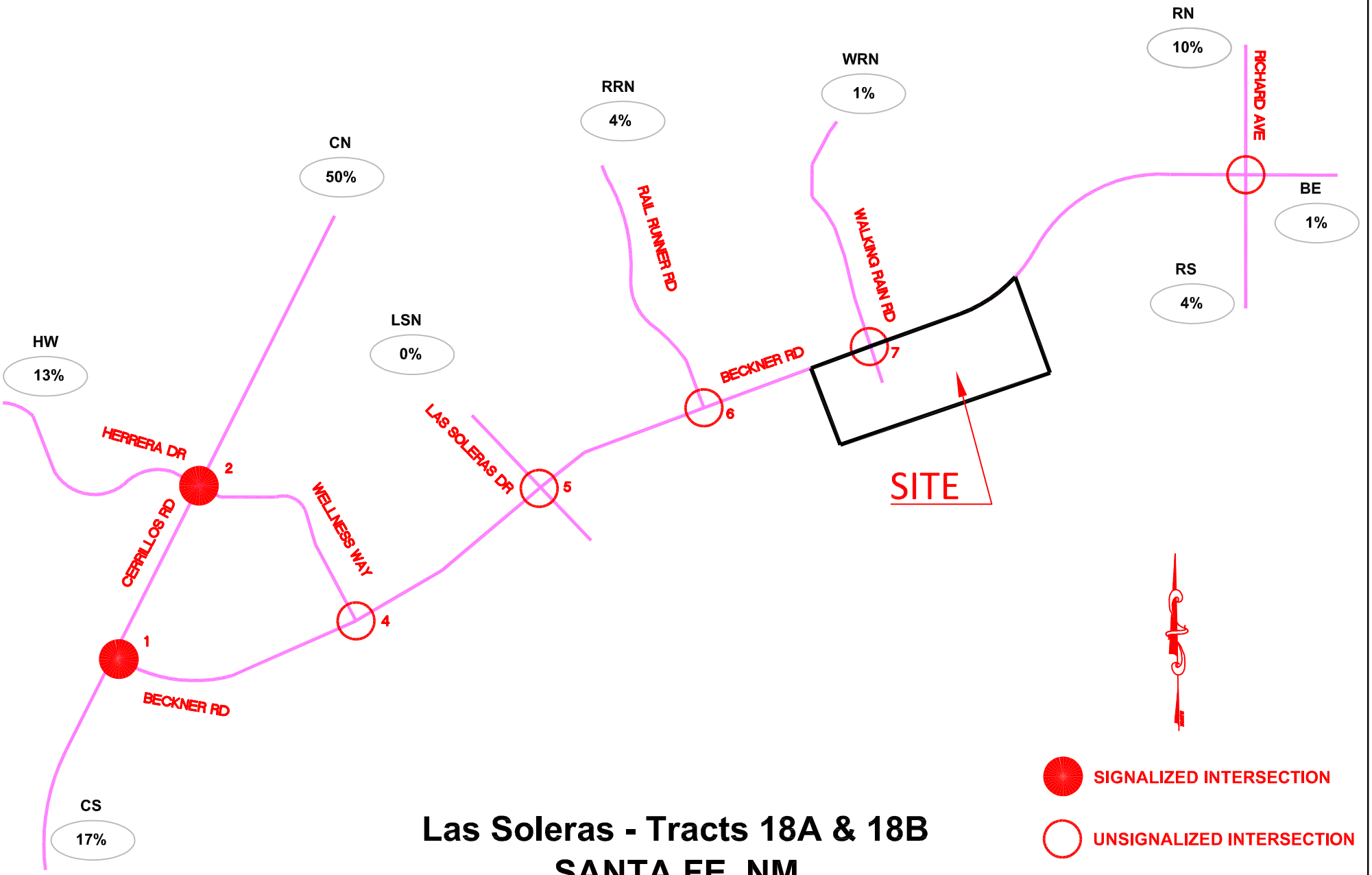


# Las Soleras - Tracts 18A & 18B
# SANTA FE, NM
## (BECKNER RD / WALKING RAIN RD.)
## Trip Distribution Map (%)
## OFFICE

TIERRA WEST, LLC
5571 MIDWAY PARK PLACE NE
ALBUQUERQUE, NEW MEXICO 87109
(505)858-3100

A-30

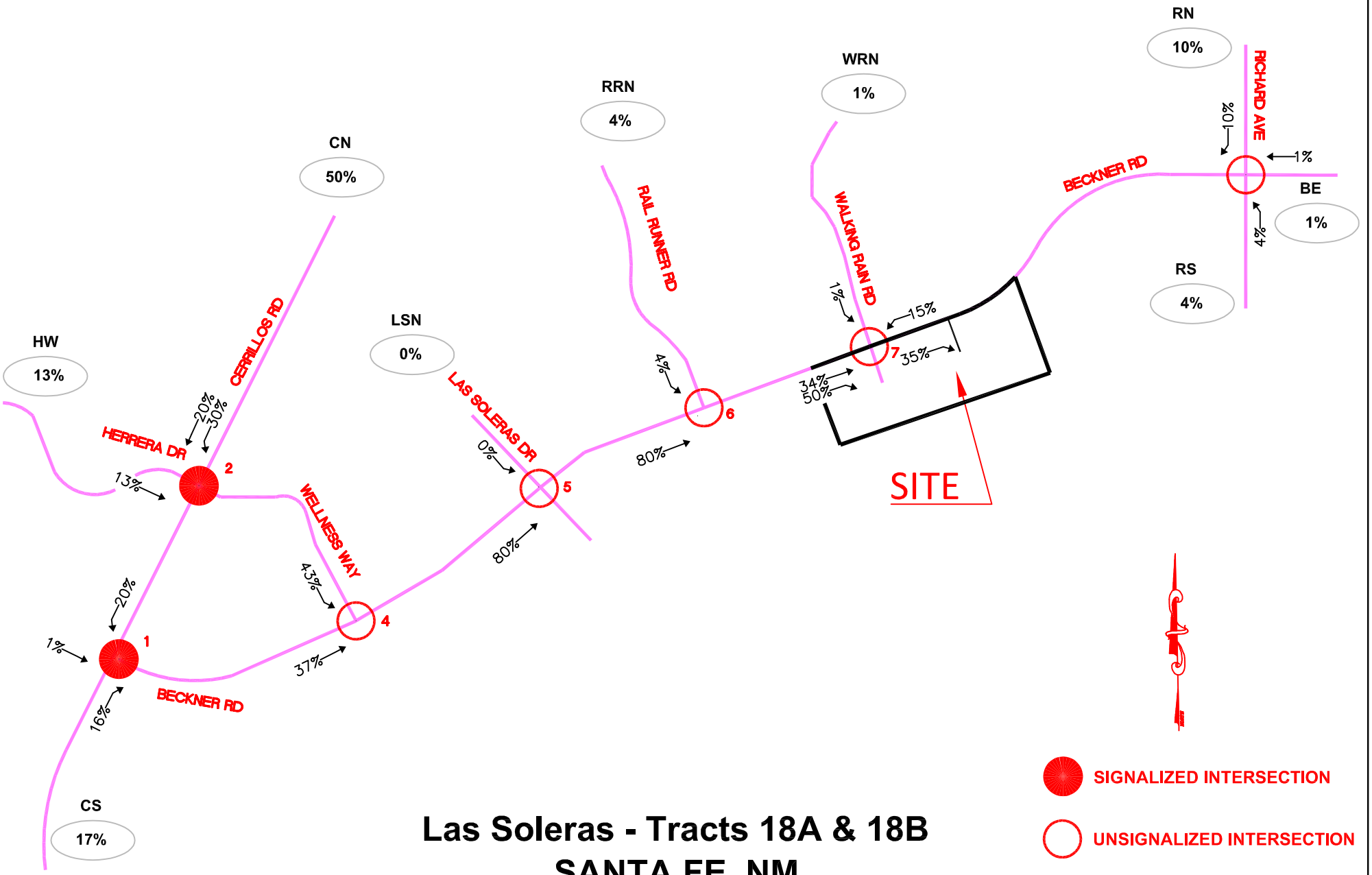


# Las Soleras - Tracts 18A & 18B
# SANTA FE, NM

**(BECKNER RD / WALKING RAIN RD.)**

**Trip Assignments Map (% Entering)**

**OFFICE**


TIERRA WEST, LLC
5571 MIDWAY PARK PLACE NE
ALBUQUERQUE, NEW MEXICO 87109
(505)858-3100


A-31

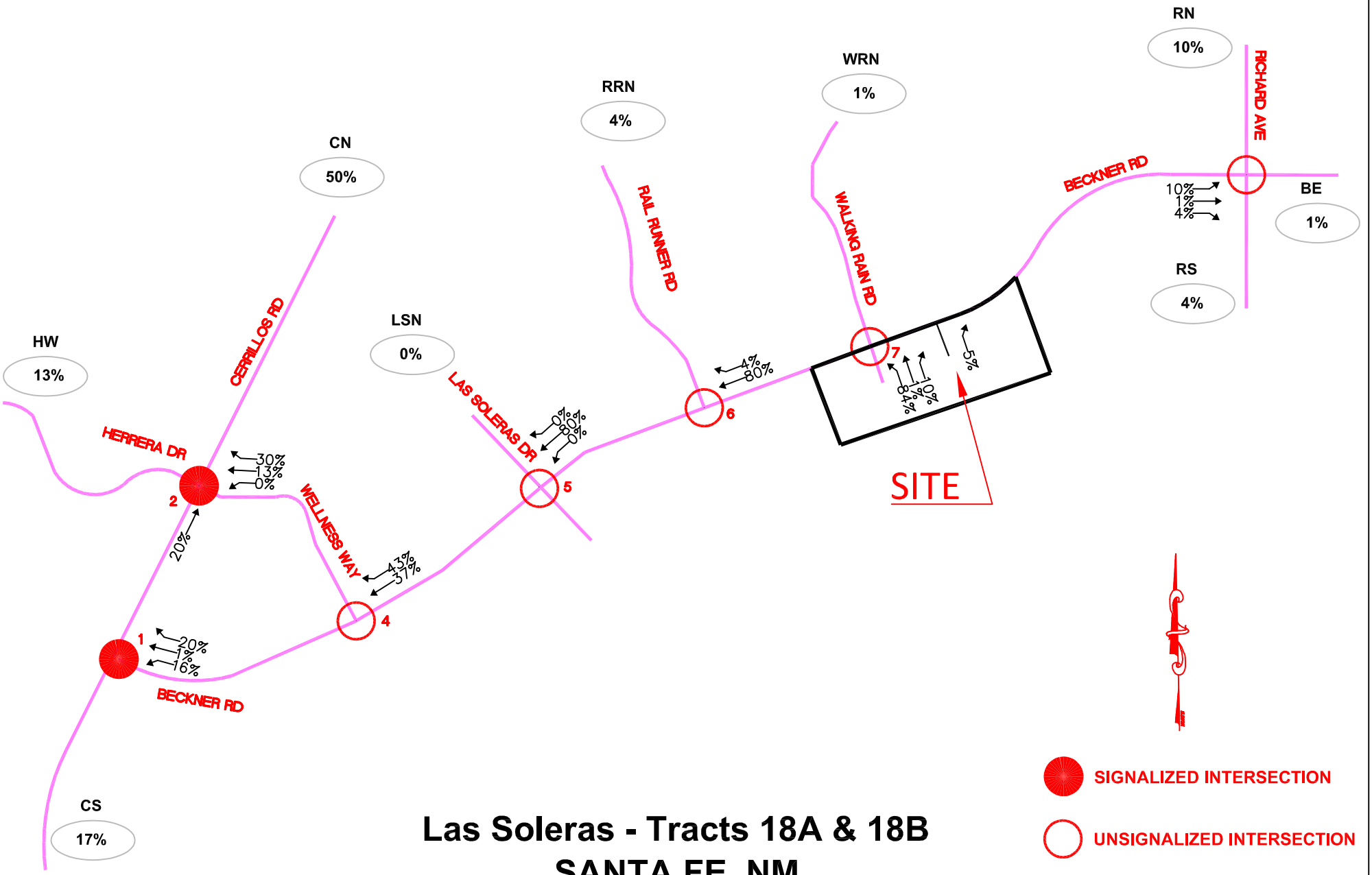


# Las Soleras - Tracts 18A & 18B
# SANTA FE, NM
## (BECKNER RD / WALKING RAIN RD.)
## Trip Assignments Map (% Exiting)
## OFFICE

TIERRA WEST, LLC
5571 MIDWAY PARK PLACE NE
ALBUQUERQUE, NEW MEXICO 87109
(505)858-3100

A-32

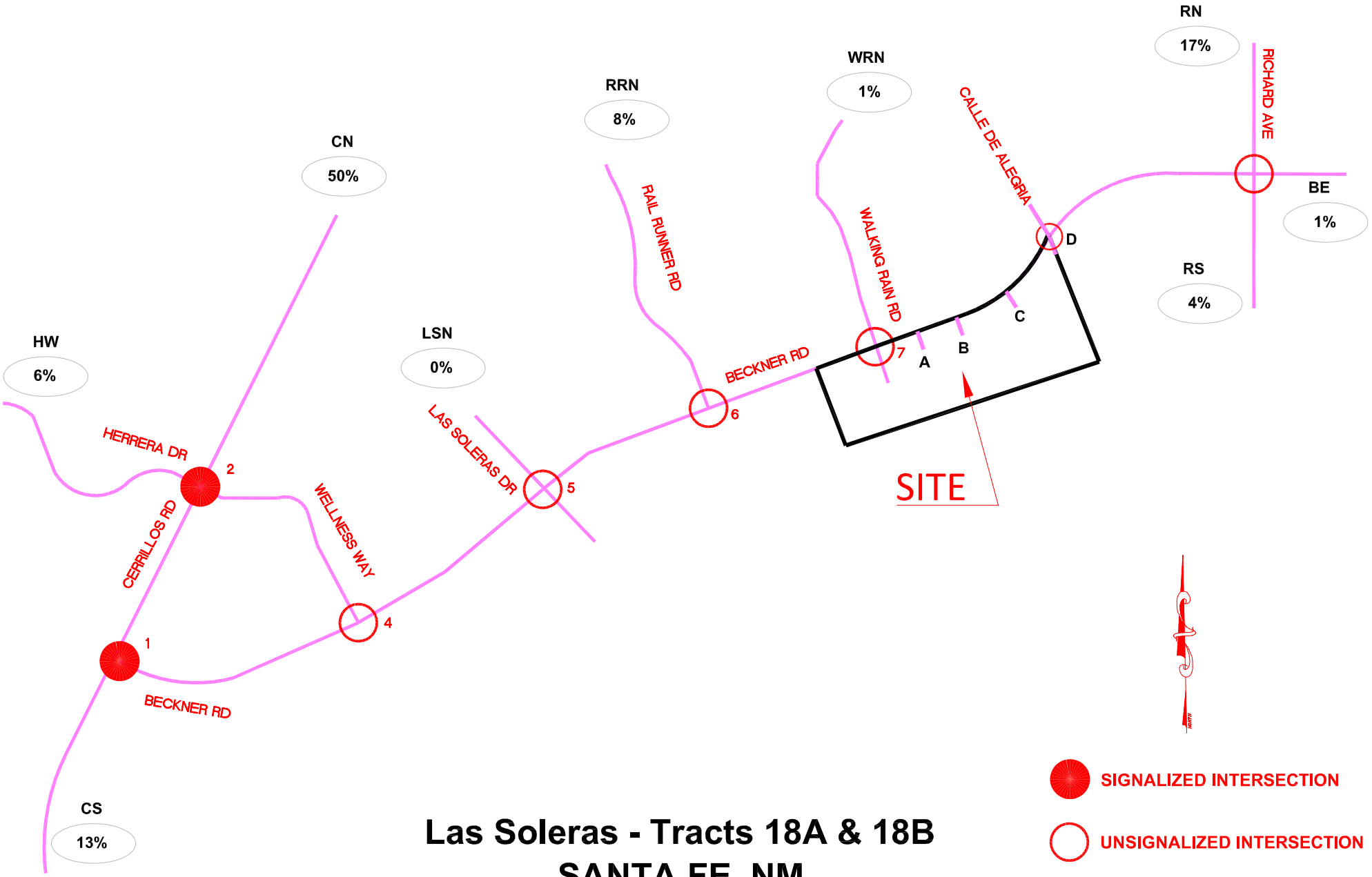


# Las Soleras - Tracts 18A & 18B
# SANTA FE, NM
## (BECKNER RD / WALKING RAIN RD.)
## Trip Distribution Map (%)
## RESIDENTIAL

TIERRA WEST, LLC
5571 MIDWAY PARK PLACE NE
ALBUQUERQUE, NEW MEXICO 87109
(505)858-3100

A-33

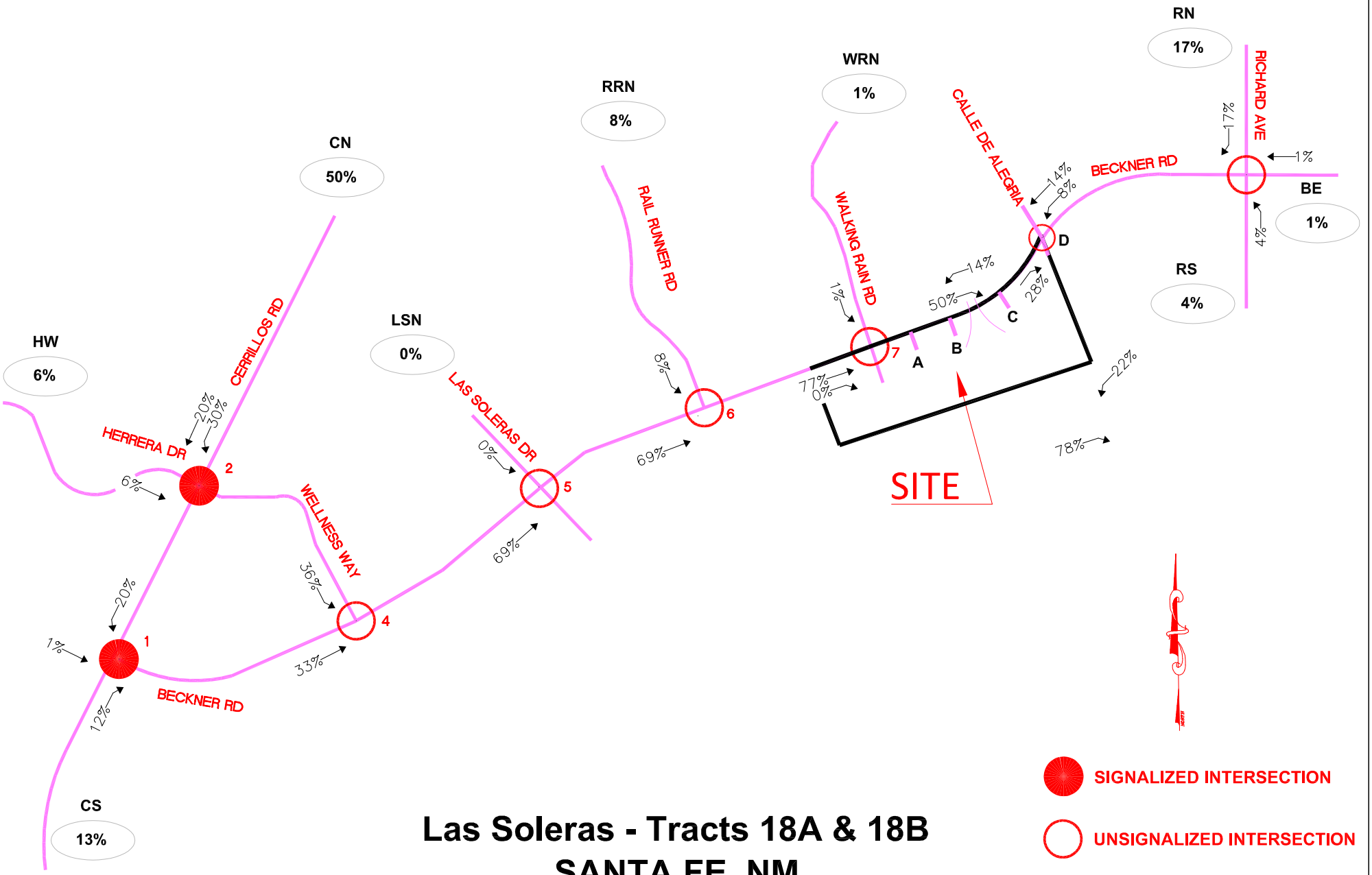


# Las Soleras - Tracts 18A & 18B
# SANTA FE, NM
## (BECKNER RD / WALKING RAIN RD.)
## Trip Assignments Map (% Entering)
## RESIDENTIAL


TIERRA WEST, LLC
5571 MIDWAY PARK PLACE NE
ALBUQUERQUE, NEW MEXICO 87109
(505)858-3100


A-34

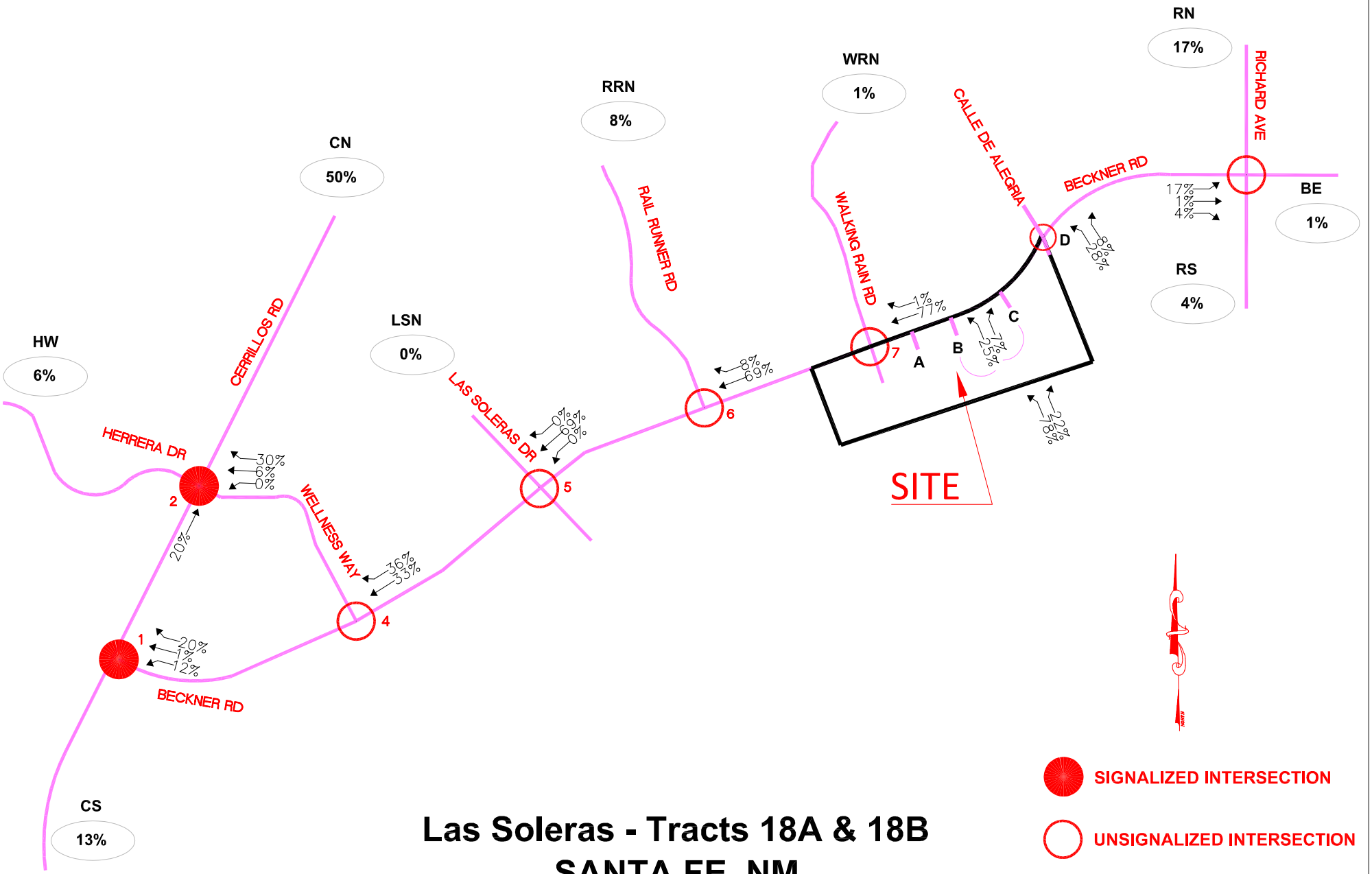


# Las Soleras - Tracts 18A & 18B
# SANTA FE, NM
## (BECKNER RD / WALKING RAIN RD.)
## Trip Assignments Map (% Exiting)
## RESIDENTIAL

TIERRA WEST, LLC
5571 MIDWAY PARK PLACE NE
ALBUQUERQUE, NEW MEXICO 87109
(505)858-3100

A-35

# *Las Soleras, Tracts 18A & 18B*

Projected Turning Movements SUMMARY

***PROPOSED DEVELOPMENT (2025) - 100% Development***

**INTERSECTION:** **Summary**

**Beckner Rd. / Cerrillos Rd.**

(1)

| 3.0% Truck | 0.86 PHF | | | 0.86 PHF | | | 0.86 PHF | | | 0.86 PHF | | |
|---|---|---|---|---|---|---|---|---|---|---|---|---|
| | Eastbound (Beckner Rd.) | | | Westbound (Beckner Rd.) | | | Northbound (Cerrillos Rd.) | | | Southbound (Cerrillos Rd.) | | |
| | Left | Thru | Right | Left | Thru | Right | Left | Thru | Right | Left | Thru | Right |
| **Existing (2024)** | 308 | 62 | 72 | 76 | 30 | 22 | 72 | 1,171 | 134 | 24 | 739 | 156 |
| ***2025 (NO BUILD - A.M.)*** | *376* | *113* | *78* | *203* | *72* | *50* | *77* | *1,254* | *272* | *45* | *778* | *159* |
| ***2025 (BUILD - A.M.)*** | ***376*** | ***116*** | ***78*** | ***227*** | ***74*** | ***101*** | ***77*** | ***1,254*** | ***307*** | ***108*** | ***778*** | ***159*** |

| | 0.96 PHF | | | 0.96 PHF | | | 0.96 PHF | | | 0.96 PHF | | |
|---|---|---|---|---|---|---|---|---|---|---|---|---|
| | Eastbound (Beckner Rd.) | | | Westbound (Beckner Rd.) | | | Northbound (Cerrillos Rd.) | | | Southbound (Cerrillos Rd.) | | |
| | Left | Thru | Right | Left | Thru | Right | Left | Thru | Right | Left | Thru | Right |
| **Existing (2024)** | 226 | 18 | 48 | 135 | 27 | 56 | 70 | 977 | 74 | 30 | 1,242 | 276 |
| ***2025 (NO BUILD - P.M.)*** | *279* | *47* | *52* | *303* | *90* | *116* | *82* | *1,085* | *172* | *60* | *1,280* | *305* |
| ***2025 (BUILD - P.M.)*** | ***279*** | ***50*** | ***52*** | ***354*** | ***93*** | ***193*** | ***82*** | ***1,085*** | ***210*** | ***125*** | ***1,280*** | ***305*** |

**Herrera Rd. / Cerrillos Rd.**

(2)

| 3.0% Truck | 0.85 PHF | | | 0.85 PHF | | | 0.85 PHF | | | 0.85 PHF | | |
|---|---|---|---|---|---|---|---|---|---|---|---|---|
| | Eastbound (Herrera Rd.) | | | Westbound (Herrera Rd.) | | | Northbound (Cerrillos Rd.) | | | Southbound (Cerrillos Rd.) | | |
| | Left | Thru | Right | Left | Thru | Right | Left | Thru | Right | Left | Thru | Right |
| **Existing (2024)** | 127 | 66 | 164 | 85 | 87 | 38 | 244 | 1,094 | 97 | 48 | 698 | 64 |
| ***2025 (NO BUILD - A.M.)*** | *129* | *121* | *184* | *92* | *131* | *68* | *275* | *1,160* | *151* | *87* | *738* | *66* |
| ***2025 (BUILD - A.M.)*** | ***129*** | ***156*** | ***214*** | ***92*** | ***145*** | ***120*** | ***275*** | ***1,177*** | ***151*** | ***186*** | ***801*** | ***66*** |

| | 0.95 PHF | | | 0.95 PHF | | | 0.95 PHF | | | 0.95 PHF | | |
|---|---|---|---|---|---|---|---|---|---|---|---|---|
| | Eastbound (Herrera Rd.) | | | Westbound (Herrera Rd.) | | | Northbound (Cerrillos Rd.) | | | Southbound (Cerrillos Rd.) | | |
| | Left | Thru | Right | Left | Thru | Right | Left | Thru | Right | Left | Thru | Right |
| **Existing (2024)** | 87 | 58 | 193 | 129 | 68 | 72 | 215 | 955 | 55 | 27 | 1,236 | 55 |
| ***2025 (NO BUILD - P.M.)*** | *89* | *100* | *214* | *134* | *128* | *144* | *246* | *1,036* | *110* | *71* | *1,277* | *56* |
| ***2025 (BUILD - P.M.)*** | ***89*** | ***128*** | ***231*** | ***134*** | ***164*** | ***245*** | ***246*** | ***1,046*** | ***110*** | ***170*** | ***1,342*** | ***56*** |

**Beckner Rd. / Richards Ave.**

(3)

| 3.0% Truck | 0.68 PHF | | | 0.68 PHF | | | 0.68 PHF | | | 0.68 PHF | | |
|---|---|---|---|---|---|---|---|---|---|---|---|---|
| | Eastbound (Beckner Rd.) | | | Westbound (Beckner Rd.) | | | Northbound (Richards Ave.) | | | Southbound (Richards Ave.) | | |
| | Left | Thru | Right | Left | Thru | Right | Left | Thru | Right | Left | Thru | Right |
| **Existing (2024)** | 68 | 21 | 64 | 6 | 8 | 99 | 52 | 361 | 23 | 94 | 340 | 82 |
| ***2025 (NO BUILD - A.M.)*** | *168* | *32* | *114* | *6* | *22* | *101* | *111* | *368* | *23* | *95* | *347* | *191* |
| ***2025 (BUILD - A.M.)*** | ***204*** | ***34*** | ***129*** | ***6*** | ***25*** | ***101*** | ***128*** | ***368*** | ***23*** | ***95*** | ***347*** | ***227*** |

| | 0.96 PHF | | | 0.96 PHF | | | 0.96 PHF | | | 0.96 PHF | | |
|---|---|---|---|---|---|---|---|---|---|---|---|---|
| | Eastbound (Beckner Rd.) | | | Westbound (Beckner Rd.) | | | Northbound (Richards Ave.) | | | Southbound (Richards Ave.) | | |
| | Left | Thru | Right | Left | Thru | Right | Left | Thru | Right | Left | Thru | Right |
| **Existing (2024)** | 77 | 3 | 63 | 0 | 2 | 4 | 42 | 331 | 0 | 9 | 364 | 98 |
| ***2025 (NO BUILD - P.M.)*** | *178* | *9* | *107* | *0* | *9* | *4* | *125* | *337* | *0* | *10* | *371* | *277* |
| ***2025 (BUILD - P.M.)*** | ***225*** | ***12*** | ***124*** | ***0*** | ***12*** | ***4*** | ***140*** | ***337*** | ***0*** | ***10*** | ***371*** | ***323*** |

**Beckner Rd. / Wellness Way**

(4)

| 3.0% Truck | 0.72 PHF | | | 0.72 PHF | | | 0.72 PHF | | | 0.72 PHF | | |
|---|---|---|---|---|---|---|---|---|---|---|---|---|
| | Eastbound (Beckner Rd.) | | | Westbound (Beckner Rd.) | | | Northbound (Wellness Way) | | | Southbound (Wellness Way) | | |
| | Left | Thru | Right | Left | Thru | Right | Left | Thru | Right | Left | Thru | Right |
| **Existing (2024)** | 27 | 141 | 0 | 0 | 74 | 63 | 0 | 0 | 0 | 45 | 0 | 4 |
| ***2025 (NO BUILD - A.M.)*** | *33* | *374* | *0* | *0* | *205* | *101* | *0* | *0* | *0* | *134* | *0* | *56* |
| ***2025 (BUILD - A.M.)*** | ***33*** | ***476*** | ***0*** | ***0*** | ***284*** | ***201*** | ***0*** | ***0*** | ***0*** | ***263*** | ***0*** | ***56*** |

| | 0.88 PHF | | | 0.88 PHF | | | 0.88 PHF | | | 0.88 PHF | | |
|---|---|---|---|---|---|---|---|---|---|---|---|---|
| | Eastbound (Beckner Rd.) | | | Westbound (Beckner Rd.) | | | Northbound (Wellness Way) | | | Southbound (Wellness Way) | | |
| | Left | Thru | Right | Left | Thru | Right | Left | Thru | Right | Left | Thru | Right |
| **Existing (2024)** | 18 | 69 | 0 | 0 | 89 | 53 | 0 | 0 | 0 | 61 | 0 | 104 |
| ***2025 (NO BUILD - P.M.)*** | *35* | *224* | *0* | *0* | *291* | *170* | *0* | *0* | *0* | *120* | *0* | *150* |
| ***2025 (BUILD - P.M.)*** | ***35*** | ***329*** | ***0*** | ***0*** | ***422*** | ***327*** | ***0*** | ***0*** | ***0*** | ***246*** | ***0*** | ***150*** |

# *Las Soleras, Tracts 18A & 18B*

Projected Turning Movements SUMMARY

***PROPOSED DEVELOPMENT (2025) - 100% Development***

**INTERSECTION:** **Summary**

**Beckner Rd. / Las Soleras Dr.**

| (5) | 0.87 | | | 0.87 | | | 0.87 | | | 0.87 | | | PHF |
|---|---|---|---|---|---|---|---|---|---|---|---|---|---|
| | Eastbound (Beckner Rd.) | | | Westbound (Beckner Rd.) | | | Northbound (Las Soleras Dr.) | | | Southbound (Las Soleras Dr.) | | | |
| 3.0% Truck | Left | Thru | Right | Left | Thru | Right | Left | Thru | Right | Left | Thru | Right | |
| **Existing (2024)** | 4 | 156 | 0 | 0 | 146 | 1 | 0 | 0 | 0 | 1 | 0 | 2 | |
| ***2025 (NO BUILD - A.M.)*** | *7* | *404* | *9* | *29* | *287* | *1* | *16* | *0* | *4* | *8* | *44* | *10* | |
| ***2025 (BUILD - A.M.)*** | ***7*** | ***633*** | ***9*** | ***29*** | ***457*** | ***2*** | ***16*** | ***0*** | ***4*** | ***9*** | ***44*** | ***10*** | |

| | 0.63 | | | 0.63 | | | 0.63 | | | 0.63 | | | PHF |
|---|---|---|---|---|---|---|---|---|---|---|---|---|---|
| | Eastbound (Beckner Rd.) | | | Westbound (Beckner Rd.) | | | Northbound (Las Soleras Dr.) | | | Southbound (Las Soleras Dr.) | | | |
| | Left | Thru | Right | Left | Thru | Right | Left | Thru | Right | Left | Thru | Right | |
| **Existing (2024)** | 7 | 135 | 0 | 0 | 99 | 10 | 0 | 0 | 0 | 7 | 0 | 5 | |
| ***2025 (NO BUILD - P.M.)*** | *16* | *302* | *44* | *20* | *354* | *11* | *60* | *0* | *12* | *11* | *20* | *10* | |
| ***2025 (BUILD - P.M.)*** | ***16*** | ***533*** | ***44*** | ***20*** | ***596*** | ***11*** | ***60*** | ***0*** | ***12*** | ***11*** | ***20*** | ***10*** | |

**Beckner Rd. / Rail Runner Rd.**

| (6) | 0.78 | | | 0.78 | | | 0.78 | | | 0.78 | | | PHF |
|---|---|---|---|---|---|---|---|---|---|---|---|---|---|
| | Eastbound (Beckner Rd.) | | | Westbound (Beckner Rd.) | | | Northbound (Rail Runner Rd.) | | | Southbound (Rail Runner Rd.) | | | |
| 3.0% Truck | Left | Thru | Right | Left | Thru | Right | Left | Thru | Right | Left | Thru | Right | |
| **Existing (2024)** | 28 | 127 | 0 | 0 | 114 | 62 | 0 | 0 | 0 | 18 | 0 | 30 | |
| ***2025 (NO BUILD - A.M.)*** | *50* | *353* | *0* | *0* | *237* | *70* | *0* | *0* | *0* | *35* | *0* | *49* | |
| ***2025 (BUILD - A.M.)*** | ***50*** | ***583*** | ***0*** | ***0*** | ***417*** | ***93*** | ***0*** | ***0*** | ***0*** | ***58*** | ***0*** | ***49*** | |

| | 0.85 | | | 0.85 | | | 0.85 | | | 0.85 | | | PHF |
|---|---|---|---|---|---|---|---|---|---|---|---|---|---|
| | Eastbound (Beckner Rd.) | | | Westbound (Beckner Rd.) | | | Northbound (Rail Runner Rd.) | | | Southbound (Rail Runner Rd.) | | | |
| | Left | Thru | Right | Left | Thru | Right | Left | Thru | Right | Left | Thru | Right | |
| **Existing (2024)** | 18 | 127 | 0 | 0 | 94 | 31 | 0 | 0 | 0 | 22 | 0 | 20 | |
| ***2025 (NO BUILD - P.M.)*** | *42* | *253* | *0* | *0* | *350* | *51* | *0* | *0* | *0* | *33* | *0* | *47* | |
| ***2025 (BUILD - P.M.)*** | ***42*** | ***484*** | ***0*** | ***0*** | ***638*** | ***74*** | ***0*** | ***0*** | ***0*** | ***57*** | ***0*** | ***47*** | |

**Beckner Rd. / Walking Rain**

| (7) | 0.93 | | | 0.93 | | | 0.93 | | | 0.93 | | | PHF |
|---|---|---|---|---|---|---|---|---|---|---|---|---|---|
| | Eastbound (Beckner Rd.) | | | Westbound (Beckner Rd.) | | | Northbound (Walking Rain) | | | Southbound (Walking Rain) | | | |
| 3.0% Truck | Left | Thru | Right | Left | Thru | Right | Left | Thru | Right | Left | Thru | Right | |
| **Existing (2024)** | 19 | 80 | 0 | 0 | 104 | 23 | 0 | 0 | 0 | 46 | 0 | 29 | |
| ***2025 (NO BUILD - A.M.)*** | *19* | *237* | *140* | *68* | *218* | *23* | *33* | *3* | *8* | *49* | *16* | *30* | |
| ***2025 (BUILD - A.M.)*** | ***19*** | ***331*** | ***300*** | ***115*** | ***315*** | ***24*** | ***139*** | ***4*** | ***32*** | ***50*** | ***16*** | ***30*** | |

| | 0.95 | | | 0.95 | | | 0.95 | | | 0.95 | | | PHF |
|---|---|---|---|---|---|---|---|---|---|---|---|---|---|
| | Eastbound (Beckner Rd.) | | | Westbound (Beckner Rd.) | | | Northbound (Walking Rain) | | | Southbound (Walking Rain) | | | |
| | Left | Thru | Right | Left | Thru | Right | Left | Thru | Right | Left | Thru | Right | |
| **Existing (2024)** | 30 | 116 | 0 | 0 | 95 | 36 | 0 | 0 | 0 | 28 | 0 | 18 | |
| ***2025 (NO BUILD - P.M.)*** | *31* | *224* | *69* | *29* | *268* | *37* | *175* | *21* | *13* | *30* | *8* | *18* | |
| ***2025 (BUILD - P.M.)*** | ***31*** | ***393*** | ***156*** | ***55*** | ***349*** | ***38*** | ***407*** | ***23*** | ***47*** | ***32*** | ***8*** | ***18*** | |

**Beckner Rd. / Driveway "A"**

| (8) | 0.93 | | | 0.93 | | | 0.93 | | | 0.93 | | | PHF |
|---|---|---|---|---|---|---|---|---|---|---|---|---|---|
| | Eastbound (Beckner Rd.) | | | Westbound (Beckner Rd.) | | | Northbound (Driveway "A") | | | Southbound (Driveway "A") | | | |
| 3.0% Truck | Left | Thru | Right | Left | Thru | Right | Left | Thru | Right | Left | Thru | Right | |
| **Existing (2024)** | 0 | 126 | 0 | 0 | 127 | 0 | 0 | 0 | 0 | 0 | 0 | 0 | |
| ***2025 (NO BUILD - A.M.)*** | *0* | *272* | *21* | *0* | *309* | *0* | *0* | *0* | *19* | *0* | *0* | *0* | |
| ***2025 (BUILD - A.M.)*** | ***0*** | ***311*** | ***82*** | ***0*** | ***454*** | ***0*** | ***0*** | ***0*** | ***21*** | ***0*** | ***0*** | ***0*** | |

| | 0.95 | | | 0.95 | | | 0.95 | | | 0.95 | | | PHF |
|---|---|---|---|---|---|---|---|---|---|---|---|---|---|
| | Eastbound (Beckner Rd.) | | | Westbound (Beckner Rd.) | | | Northbound (Driveway "A") | | | Southbound (Driveway "A") | | | |
| | Left | Thru | Right | Left | Thru | Right | Left | Thru | Right | Left | Thru | Right | |
| **Existing (2024)** | 0 | 145 | 0 | 0 | 131 | 0 | 0 | 0 | 0 | 0 | 0 | 0 | |
| ***2025 (NO BUILD - P.M.)*** | *0* | *254* | *12* | *0* | *335* | *0* | *0* | *0* | *52* | *0* | *0* | *0* | |
| ***2025 (BUILD - P.M.)*** | ***0*** | ***415*** | ***46*** | ***0*** | ***443*** | ***0*** | ***0*** | ***0*** | ***64*** | ***0*** | ***0*** | ***0*** | |

# *Las Soleras, Tracts 18A & 18B*

Projected Turning Movements SUMMARY

***PROPOSED DEVELOPMENT (2025) - 100% Development***

**INTERSECTION:** **Summary**

**Beckner Rd. / Driveway "B"**

(9)

3.0% Truck

| | 0.97 | | | 0.97 | | | 0.97 | | | 0.97 | | | PHF |
|---|---|---|---|---|---|---|---|---|---|---|---|---|---|
| | Eastbound (Beckner Rd.) | | | Westbound (Beckner Rd.) | | | Northbound (Driveway "B") | | | Southbound (Driveway "B") | | | |
| | Left | Thru | Right | Left | Thru | Right | Left | Thru | Right | Left | Thru | Right | |
| **Existing (2024)** | 0 | 0 | 0 | 0 | 0 | 0 | 0 | 0 | 0 | 0 | 0 | 0 | |
| ***2025 (NO BUILD - A.M.)*** | *0* | *291* | *0* | *0* | *309* | *0* | *0* | *0* | *0* | *0* | *0* | *0* | |
| ***2025 (BUILD - A.M.)*** | ***0*** | ***340*** | ***11*** | ***45*** | ***356*** | ***0*** | ***33*** | ***0*** | ***9*** | ***0*** | ***0*** | ***0*** | |

| | 0.89 | | | 0.89 | | | 0.89 | | | 0.89 | | | PHF |
|---|---|---|---|---|---|---|---|---|---|---|---|---|---|
| | Eastbound (Beckner Rd.) | | | Westbound (Beckner Rd.) | | | Northbound (Driveway "B") | | | Southbound (Driveway "B") | | | |
| | Left | Thru | Right | Left | Thru | Right | Left | Thru | Right | Left | Thru | Right | |
| **Existing (2024)** | 0 | 0 | 0 | 0 | 0 | 0 | 0 | 0 | 0 | 0 | 0 | 0 | |
| ***2025 (NO BUILD - P.M.)*** | *0* | *306* | *0* | *0* | *335* | *0* | *0* | *0* | *0* | *0* | *0* | *0* | |
| ***2025 (BUILD - P.M.)*** | ***0*** | ***444*** | ***46*** | ***47*** | ***361*** | ***0*** | ***27*** | ***0*** | ***7*** | ***0*** | ***0*** | ***0*** | |

**Beckner Rd. / Driveway "C"**

(10)

3.0% Truck

| | 0.90 | | | 0.90 | | | 0.90 | | | 0.90 | | | PHF |
|---|---|---|---|---|---|---|---|---|---|---|---|---|---|
| | Eastbound (Beckner Rd.) | | | Westbound (Beckner Rd.) | | | Northbound (Driveway "C") | | | Southbound (Driveway "C") | | | |
| | Left | Thru | Right | Left | Thru | Right | Left | Thru | Right | Left | Thru | Right | |
| **Existing (2024)** | 0 | 0 | 0 | 0 | 0 | 0 | 0 | 0 | 0 | 0 | 0 | 0 | |
| ***2025 (NO BUILD - A.M.)*** | *0* | *291* | *0* | *0* | *309* | *0* | *0* | *0* | *0* | *0* | *0* | *0* | |
| ***2025 (BUILD - A.M.)*** | ***0*** | ***328*** | ***11*** | ***45*** | ***359*** | ***0*** | ***33*** | ***0*** | ***9*** | ***0*** | ***0*** | ***0*** | |

| | 0.90 | | | 0.90 | | | 0.90 | | | 0.90 | | | PHF |
|---|---|---|---|---|---|---|---|---|---|---|---|---|---|
| | Eastbound (Beckner Rd.) | | | Westbound (Beckner Rd.) | | | Northbound (Driveway "C") | | | Southbound (Driveway "C") | | | |
| | Left | Thru | Right | Left | Thru | Right | Left | Thru | Right | Left | Thru | Right | |
| **Existing (2024)** | 0 | 0 | 0 | 0 | 0 | 0 | 0 | 0 | 0 | 0 | 0 | 0 | |
| ***2025 (NO BUILD - P.M.)*** | *0* | *306* | *0* | *0* | *335* | *0* | *0* | *0* | *0* | *0* | *0* | *0* | |
| ***2025 (BUILD - P.M.)*** | ***0*** | ***398*** | ***46*** | ***47*** | ***373*** | ***0*** | ***27*** | ***0*** | ***7*** | ***0*** | ***0*** | ***0*** | |

**Beckner Rd. / Driveway "D"**

(11)

3.0% Truck

| | 0.90 | | | 0.90 | | | 0.90 | | | 0.90 | | | PHF |
|---|---|---|---|---|---|---|---|---|---|---|---|---|---|
| | Eastbound (Beckner Rd.) | | | Westbound (Beckner Rd.) | | | Northbound (Driveway "C") | | | Southbound (Driveway "C") | | | |
| | Left | Thru | Right | Left | Thru | Right | Left | Thru | Right | Left | Thru | Right | |
| **Existing (2024)** | 0 | 0 | 0 | 0 | 0 | 0 | 0 | 0 | 0 | 0 | 0 | 0 | |
| ***2025 (NO BUILD - A.M.)*** | *0* | *291* | *0* | *0* | *309* | *0* | *0* | *0* | *0* | *0* | *0* | *0* | |
| ***2025 (BUILD - A.M.)*** | ***0*** | ***328*** | ***11*** | ***45*** | ***359*** | ***0*** | ***33*** | ***0*** | ***9*** | ***0*** | ***0*** | ***0*** | |

| | 0.90 | | | 0.90 | | | 0.90 | | | 0.90 | | | PHF |
|---|---|---|---|---|---|---|---|---|---|---|---|---|---|
| | Eastbound (Beckner Rd.) | | | Westbound (Beckner Rd.) | | | Northbound (Driveway "C") | | | Southbound (Driveway "C") | | | |
| | Left | Thru | Right | Left | Thru | Right | Left | Thru | Right | Left | Thru | Right | |
| **Existing (2024)** | 0 | 0 | 0 | 0 | 0 | 0 | 0 | 0 | 0 | 0 | 0 | 0 | |
| ***2025 (NO BUILD - P.M.)*** | *0* | *306* | *0* | *0* | *335* | *0* | *0* | *0* | *0* | *0* | *0* | *0* | |
| ***2025 (BUILD - P.M.)*** | ***0*** | ***398*** | ***46*** | ***47*** | ***373*** | ***0*** | ***27*** | ***0*** | ***7*** | ***0*** | ***0*** | ***0*** | |

# *Las Soleras, Tracts 18A & 18B*

Projected Turning Movements Worksheet

***Beckner Rd. / Cerrillos Rd.***

**INTERSECTION:** E-W Street: **Beckner Rd.** (1)

N-S Street: **Cerrillos Rd.**

Year of Existing Counts 2022

Horizon Year **2025**

| **Growth Rates** | **2.00%** | | | **2.00%** | | | **2.00%** | | | **2.00%** | | |
|---|---|---|---|---|---|---|---|---|---|---|---|---|
| | **Eastbound (Beckner Rd.)** | | | **Westbound (Beckner Rd.)** | | | **Northbound (Cerrillos Rd.)** | | | **Southbound (Cerrillos Rd.)** | | |
| | Left | Thru | Right | Left | Thru | Right | Left | Thru | Right | Left | Thru | Right |
| Existing Volumes | 296 | 60 | 69 | 73 | 29 | 21 | 69 | 1,126 | 129 | 23 | 711 | 150 |
| Background Traffic Growth | 18 | 4 | 4 | 4 | 2 | 1 | 4 | 68 | 8 | 1 | 43 | 9 |
| *Subtotal* | 314 | 64 | 73 | 77 | 31 | 22 | 73 | 1,194 | 137 | 24 | 754 | 159 |
| Medical Office Buiding Trips | 0 | 30 | 0 | 9 | 3 | 2 | 0 | 0 | 70 | 5 | 0 | 0 |
| Vista de la Sierra Trips | 0 | 1 | 0 | 15 | 1 | 6 | 0 | 0 | 20 | 8 | 0 | 0 |
| Other Developments (See Below) | 62 | 18 | 5 | 102 | 37 | 20 | 4 | 60 | 45 | 8 | 24 | 0 |
| ***Subtotal (NO BUILD - A.M.)*** | ***376*** | ***113*** | ***78*** | ***203*** | ***72*** | ***50*** | ***77*** | ***1,254*** | ***272*** | ***45*** | ***778*** | ***159*** |
| *Percent Residential Trips Generated(Entering)* | *0.00%* | ***1.00%*** | *0.00%* | *0.00%* | *0.00%* | *0.00%* | *0.00%* | *0.00%* | ***12.00%*** | ***20.00%*** | *0.00%* | *0.00%* |
| *Percent Residential Trips Generated(Exiting)* | *0.00%* | *0.00%* | *0.00%* | ***12.00%*** | ***1.00%*** | ***20.00%*** | *0.00%* | *0.00%* | *0.00%* | *0.00%* | *0.00%* | *0.00%* |
| *Percent Commercial Trips Generated(Entering)* | *0.00%* | ***1.00%*** | *0.00%* | *0.00%* | *0.00%* | *0.00%* | *0.00%* | *0.00%* | ***2.00%*** | ***20.00%*** | *0.00%* | *0.00%* |
| *Percent Commercial Trips Generated(Exiting)* | *0.00%* | *0.00%* | *0.00%* | ***2.00%*** | ***1.00%*** | ***20.00%*** | *0.00%* | *0.00%* | *0.00%* | *0.00%* | *0.00%* | *0.00%* |
| *Percent Office Trips Generated(Entering)* | *0.00%* | ***1.00%*** | *0.00%* | *0.00%* | *0.00%* | *0.00%* | *0.00%* | *0.00%* | ***16.00%*** | ***20.00%*** | *0.00%* | *0.00%* |
| *Percent Office Trips Generated(Exiting)* | *0.00%* | *0.00%* | *0.00%* | ***16.00%*** | ***1.00%*** | ***20.00%*** | *0.00%* | *0.00%* | *0.00%* | *0.00%* | *0.00%* | *0.00%* |
| Total Trips Generated | 0 | 3 | 0 | 24 | 2 | 51 | 0 | 0 | 35 | 63 | 0 | 0 |
| **Total AM Peak Hour BUILD Volumes** | **376** | **116** | **78** | **227** | **74** | **101** | **77** | **1,254** | **307** | **108** | **778** | **159** |

| | **Eastbound (Beckner Rd.)** | | | **Westbound (Beckner Rd.)** | | | **Northbound (Cerrillos Rd.)** | | | **Southbound (Cerrillos Rd.)** | | |
|---|---|---|---|---|---|---|---|---|---|---|---|---|
| | Left | Thru | Right | Left | Thru | Right | Left | Thru | Right | Left | Thru | Right |
| Existing Volumes | 217 | 17 | 46 | 130 | 26 | 54 | 67 | 939 | 71 | 29 | 1,194 | 265 |
| Background Traffic Growth | 13 | 1 | 3 | 8 | 2 | 3 | 4 | 56 | 4 | 2 | 72 | 16 |
| *Subtotal* | 230 | 18 | 49 | 138 | 28 | 57 | 71 | 995 | 75 | 31 | 1,266 | 281 |
| Medical Office Buiding Trips | 0 | 4 | 0 | 52 | 16 | 34 | 0 | 0 | 25 | 12 | 0 | 0 |
| Vista de la Sierra Trips | 0 | 1 | 0 | 8 | 1 | 4 | 0 | 0 | 11 | 6 | 0 | 0 |
| Other Developments (See Below) | 49 | 24 | 3 | 105 | 45 | 21 | 11 | 90 | 61 | 11 | 14 | 24 |
| ***Subtotal (NO BUILD - P.M.)*** | ***279*** | ***47*** | ***52*** | ***303*** | ***90*** | ***116*** | ***82*** | ***1,085*** | ***172*** | ***60*** | ***1,280*** | ***305*** |
| *Percent Residential Trips Generated(Entering)* | *0.00%* | ***1.00%*** | *0.00%* | *0.00%* | *0.00%* | *0.00%* | *0.00%* | *0.00%* | ***12.00%*** | ***20.00%*** | *0.00%* | *0.00%* |
| *Percent Residential Trips Generated(Exiting)* | *0.00%* | *0.00%* | *0.00%* | ***12.00%*** | ***1.00%*** | ***20.00%*** | *0.00%* | *0.00%* | *0.00%* | *0.00%* | *0.00%* | *0.00%* |
| *Percent Commercial Trips Generated(Entering)* | *0.00%* | ***1.00%*** | *0.00%* | *0.00%* | *0.00%* | *0.00%* | *0.00%* | *0.00%* | ***2.00%*** | ***20.00%*** | *0.00%* | *0.00%* |
| *Percent Commercial Trips Generated(Exiting)* | *0.00%* | *0.00%* | *0.00%* | ***2.00%*** | ***1.00%*** | ***20.00%*** | *0.00%* | *0.00%* | *0.00%* | *0.00%* | *0.00%* | *0.00%* |
| *Percent Office Trips Generated(Entering)* | *0.00%* | ***1.00%*** | *0.00%* | *0.00%* | *0.00%* | *0.00%* | *0.00%* | *0.00%* | ***16.00%*** | ***20.00%*** | *0.00%* | *0.00%* |
| *Percent Office Trips Generated(Exiting)* | *0.00%* | *0.00%* | *0.00%* | ***16.00%*** | ***1.00%*** | ***20.00%*** | *0.00%* | *0.00%* | *0.00%* | *0.00%* | *0.00%* | *0.00%* |
| Total Trips Generated | 0 | 3 | 0 | 51 | 3 | 77 | 0 | 0 | 38 | 65 | 0 | 0 |
| **Total PM Peak Hour BUILD Volumes** | **279** | **50** | **52** | **354** | **93** | **193** | **82** | **1,085** | **210** | **125** | **1,280** | **305** |

| | Entering | Exiting | | |
|---|---|---|---|---|
| Number of Residential Trips Generated | **44** | **126** | A.M. | 100% Residential Development |
| | **177** | **105** | P.M. | |
| Number of Commercial Trips Generated | **94** | **87** | A.M. | 100% Commercial Development |
| | **49** | **49** | P.M. | |
| Number of Office Trips Generated | **175** | **46** | A.M. | 100% Office Development |
| | **98** | **231** | P.M. | |

**AM Peak - Other Developments**

| | | | | | | | | | | | | |
|---|---|---|---|---|---|---|---|---|---|---|---|---|
| Cielo Apts. Trips | 0 | 2 | 0 | 19 | 5 | 4 | 0 | 0 | 4 | 1 | 0 | 0 |
| Village at Las Soleras Trip | 0 | 0 | 0 | 0 | 0 | 0 | 0 | 9 | 0 | 0 | 23 | 0 |
| Cavan Development Trips | 51 | 9 | 5 | 0 | 3 | 0 | 4 | 0 | 0 | 7 | 0 | 0 |
| 5201 Beckner Rd. Trips | 2 | 0 | 0 | 11 | 6 | 1 | 0 | 0 | 3 | 0 | 1 | 0 |
| Hevenly Santa Fe Trips | 0 | 3 | 0 | 17 | 8 | 0 | 0 | 0 | 6 | 0 | 0 | 0 |
| Presbyterian Medical Offices | 0 | 4 | 0 | 8 | 0 | 0 | 0 | 0 | 32 | 0 | 0 | 0 |
| 5407 Beckner Rd. Trips | 9 | 0 | 0 | 47 | 15 | 15 | 0 | 51 | 0 | 0 | 0 | 0 |
| Subtotal (AM Peak) - Projects Above - | 62 | 18 | 5 | 102 | 37 | 20 | 4 | 60 | 45 | 8 | 24 | 0 |

**PM Peak - Other Developments**

| | | | | | | | | | | | | |
|---|---|---|---|---|---|---|---|---|---|---|---|---|
| Cielo Apts. Trips | 0 | 5 | 0 | 7 | 2 | 4 | 0 | 0 | 15 | 10 | 0 | 0 |
| Village at Las Soleras Trip | 0 | 0 | 0 | 0 | 0 | 0 | 0 | 39 | 0 | 0 | 13 | 0 |
| Cavan Development Trips | 36 | 6 | 3 | 0 | 11 | 0 | 11 | 0 | 0 | 0 | 0 | 24 |
| 5201 Beckner Rd. Trips | 5 | 0 | 0 | 6 | 3 | 1 | 0 | 1 | 11 | 1 | 1 | 0 |
| Hevenly Santa Fe Trips | 0 | 9 | 0 | 11 | 5 | 0 | 0 | 0 | 19 | 0 | 0 | 0 |
| Presbyterian Medical Offices | 0 | 4 | 0 | 36 | 8 | 0 | 0 | 0 | 16 | 0 | 0 | 0 |
| 5407 Beckner Rd. Trips | 8 | 0 | 0 | 45 | 16 | 16 | 0 | 50 | 0 | 0 | 0 | 0 |
| Subtotal (PM Peak) - Projects Above - | 49 | 24 | 3 | 105 | 45 | 21 | 11 | 90 | 61 | 11 | 14 | 24 |

2025
**NO BUILD**

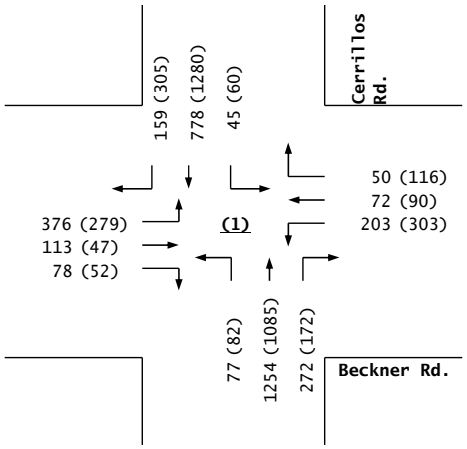


**Trips**

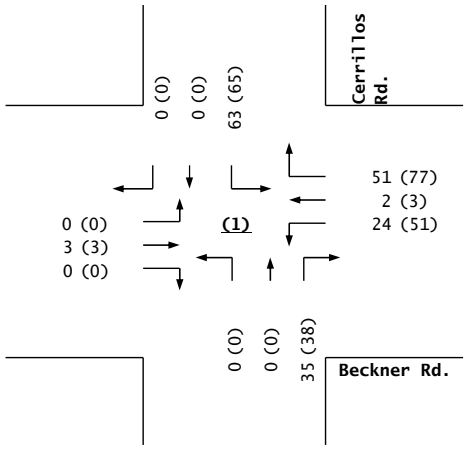


2025
**BUILD**

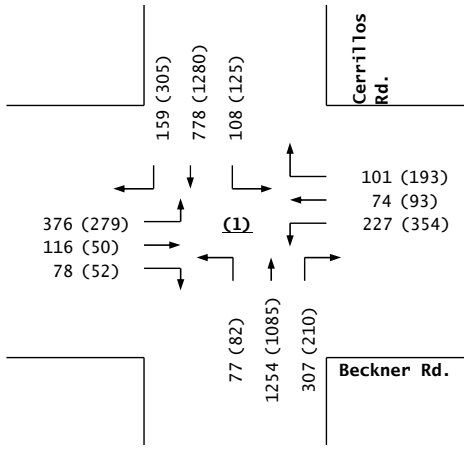


**Beckner Rd. / Cerrillos Rd.**

# *Las Soleras, Tracts 18A & 18B*

Projected Turning Movements Worksheet

***Herrera Rd. / Cerrillos Rd.***

**INTERSECTION:** E-W Street: **Herrera Rd.** (2)

N-S Street: **Cerrillos Rd.**

Year of Existing Counts 2022

Horizon Year **2025**

**Growth Rates** **2.00%** **2.00%** **2.00%** **2.00%**

| | Eastbound (Herrera Rd.) | | | Westbound (Herrera Rd.) | | | Northbound (Cerrillos Rd.) | | | Southbound (Cerrillos Rd.) | | |
|---|---|---|---|---|---|---|---|---|---|---|---|---|
| | Left | Thru | Right | Left | Thru | Right | Left | Thru | Right | Left | Thru | Right |
| Existing Volumes | 122 | 63 | 158 | 82 | 84 | 37 | 235 | 1,052 | 93 | 46 | 671 | 62 |
| Background Traffic Growth | 7 | 4 | 9 | 5 | 5 | 2 | 14 | 63 | 6 | 3 | 40 | 4 |
| *Subtotal* | 129 | 67 | 167 | 87 | 89 | 39 | 249 | 1,115 | 99 | 49 | 711 | 66 |
| Medical Office Buiding Trips | 0 | 30 | 0 | 0 | 13 | 5 | 0 | 0 | 0 | 19 | 0 | 0 |
| Vista de la Sierra Trips | 0 | 5 | 0 | 0 | 5 | 5 | 0 | 0 | 5 | 5 | 0 | 0 |
| Other Developments (See Below) | 0 | 19 | 17 | 5 | 24 | 19 | 26 | 45 | 47 | 14 | 27 | 0 |
| ***Subtotal (NO BUILD - A.M.)*** | ***129*** | ***121*** | ***184*** | ***92*** | ***131*** | ***68*** | ***275*** | ***1,160*** | ***151*** | ***87*** | ***738*** | ***66*** |
| *Percent Residential Trips Generated(Entering)* | *0.00%* | ***6.00%*** | *0.00%* | *0.00%* | *0.00%* | *0.00%* | *0.00%* | *0.00%* | *0.00%* | ***30.00%*** | ***20.00%*** | *0.00%* |
| *Percent Residential Trips Generated(Exiting)* | *0.00%* | *0.00%* | *0.00%* | *0.00%* | ***6.00%*** | ***30.00%*** | *0.00%* | *0.00%* | *0.00%* | *0.00%* | *0.00%* | *0.00%* |
| *Percent Commercial Trips Generated(Entering)* | *0.00%* | ***5.00%*** | *0.00%* | *0.00%* | *0.00%* | *0.00%* | *0.00%* | *0.00%* | *0.00%* | ***35.00%*** | ***20.00%*** | *0.00%* |
| *Percent Commercial Trips Generated(Exiting)* | *0.00%* | ***5.00%*** | ***35.00%*** | *0.00%* | *0.00%* | *0.00%* | *0.00%* | ***20.00%*** | *0.00%* | *0.00%* | *0.00%* | *0.00%* |
| *Percent Office Trips Generated(Entering)* | *0.00%* | ***13.00%*** | *0.00%* | *0.00%* | *0.00%* | *0.00%* | *0.00%* | *0.00%* | *0.00%* | ***30.00%*** | ***20.00%*** | *0.00%* |
| *Percent Office Trips Generated(Exiting)* | *0.00%* | *0.00%* | *0.00%* | *0.00%* | ***13.00%*** | ***30.00%*** | *0.00%* | *0.00%* | *0.00%* | *0.00%* | *0.00%* | *0.00%* |
| Total Trips Generated | 0 | 35 | 30 | 0 | 14 | 52 | 0 | 17 | 0 | 99 | 63 | 0 |
| **Total AM Peak Hour BUILD Volumes** | **129** | **156** | **214** | **92** | **145** | **120** | **275** | **1,177** | **151** | **186** | **801** | **66** |

| | Eastbound (Herrera Rd.) | | | Westbound (Herrera Rd.) | | | Northbound (Cerrillos Rd.) | | | Southbound (Cerrillos Rd.) | | |
|---|---|---|---|---|---|---|---|---|---|---|---|---|
| | Left | Thru | Right | Left | Thru | Right | Left | Thru | Right | Left | Thru | Right |
| Existing Volumes | 84 | 56 | 186 | 124 | 65 | 69 | 207 | 918 | 53 | 26 | 1,188 | 53 |
| Background Traffic Growth | 5 | 3 | 11 | 7 | 4 | 4 | 12 | 55 | 3 | 2 | 71 | 3 |
| *Subtotal* | 89 | 59 | 197 | 131 | 69 | 73 | 219 | 973 | 56 | 28 | 1,259 | 56 |
| Medical Office Buiding Trips | 0 | 9 | 0 | 0 | 26 | 42 | 0 | 0 | 0 | 9 | 0 | 0 |
| Vista de la Sierra Trips | 0 | 10 | 0 | 0 | 10 | 10 | 0 | 0 | 10 | 10 | 0 | 0 |
| Other Developments (See Below) | 0 | 22 | 17 | 3 | 23 | 19 | 27 | 63 | 44 | 24 | 18 | 0 |
| ***Subtotal (NO BUILD - P.M.)*** | ***89*** | ***100*** | ***214*** | ***134*** | ***128*** | ***144*** | ***246*** | ***1,036*** | ***110*** | ***71*** | ***1,277*** | ***56*** |
| *Percent Residential Trips Generated(Entering)* | *0.00%* | ***6.00%*** | *0.00%* | *0.00%* | *0.00%* | *0.00%* | *0.00%* | *0.00%* | *0.00%* | ***30.00%*** | ***20.00%*** | *0.00%* |
| *Percent Residential Trips Generated(Exiting)* | *0.00%* | *0.00%* | *0.00%* | *0.00%* | ***6.00%*** | ***30.00%*** | *0.00%* | *0.00%* | *0.00%* | *0.00%* | *0.00%* | *0.00%* |
| *Percent Commercial Trips Generated(Entering)* | *0.00%* | ***5.00%*** | *0.00%* | *0.00%* | *0.00%* | *0.00%* | *0.00%* | *0.00%* | *0.00%* | ***35.00%*** | ***20.00%*** | *0.00%* |
| *Percent Commercial Trips Generated(Exiting)* | *0.00%* | ***5.00%*** | ***35.00%*** | *0.00%* | *0.00%* | *0.00%* | *0.00%* | ***20.00%*** | *0.00%* | *0.00%* | *0.00%* | *0.00%* |
| *Percent Office Trips Generated(Entering)* | *0.00%* | ***13.00%*** | *0.00%* | *0.00%* | *0.00%* | *0.00%* | *0.00%* | *0.00%* | *0.00%* | ***30.00%*** | ***20.00%*** | *0.00%* |
| *Percent Office Trips Generated(Exiting)* | *0.00%* | *0.00%* | *0.00%* | *0.00%* | ***13.00%*** | ***30.00%*** | *0.00%* | *0.00%* | *0.00%* | *0.00%* | *0.00%* | *0.00%* |
| Total Trips Generated | 0 | 28 | 17 | 0 | 36 | 101 | 0 | 10 | 0 | 99 | 65 | 0 |
| **Total PM Peak Hour BUILD Volumes** | **89** | **128** | **231** | **134** | **164** | **245** | **246** | **1,046** | **110** | **170** | **1,342** | **56** |

| | Entering | Exiting | | |
|---|---|---|---|---|
| Number of Residential Trips Generated | **126** | **44** | A.M. | 100% Residential Development |
| | **177** | **105** | P.M. | |
| Number of Commercial Trips Generated | **94** | **87** | A.M. | 100% Commercial Development |
| | **49** | **49** | P.M. | |
| Number of Office Trips Generated | **175** | **46** | A.M. | 100% Office Development |
| | **98** | **231** | P.M. | |

AM Peak - Other Developments

| | | | | | | | | | | | | |
|---|---|---|---|---|---|---|---|---|---|---|---|---|
| Cielo Apts. Trips | 0 | 5 | 0 | 0 | 10 | 10 | 0 | 0 | 5 | 5 | 0 | 0 |
| Village at Las Soleras Trip | 0 | 1 | 0 | 5 | 6 | 1 | 0 | 7 | 2 | 1 | 18 | 0 |
| Cavan Development Trips | 0 | 0 | 0 | 0 | 0 | 0 | 0 | 0 | 0 | 0 | 0 | 0 |
| 5201 Beckner Rd. Trips | 0 | 0 | 0 | 0 | 0 | 0 | 0 | 0 | 0 | 0 | 0 | 0 |
| Hevenly Santa Fe Trips | 0 | 1 | 0 | 0 | 4 | 8 | 0 | 0 | 0 | 4 | 0 | 0 |
| Presbyterian Medical Offices | 0 | 12 | 0 | 0 | 4 | 0 | 0 | 0 | 0 | 4 | 0 | 0 |
| 5407 Beckner Rd. Trips | 0 | 0 | 17 | 0 | 0 | 0 | 26 | 38 | 40 | 0 | 9 | 0 |
| Subtotal (AM Peak) - Projects Above - | 0 | 19 | 17 | 5 | 24 | 19 | 26 | 45 | 47 | 14 | 27 | 0 |

PM Peak - Other Developments

| | | | | | | | | | | | | |
|---|---|---|---|---|---|---|---|---|---|---|---|---|
| Cielo Apts. Trips | 0 | 10 | 0 | 0 | 5 | 5 | 0 | 0 | 10 | 10 | 0 | 0 |
| Village at Las Soleras Trip | 0 | 3 | 0 | 3 | 3 | 1 | 0 | 23 | 6 | 2 | 10 | 0 |
| Cavan Development Trips | 0 | 0 | 0 | 0 | 0 | 0 | 0 | 0 | 0 | 0 | 0 | 0 |
| 5201 Beckner Rd. Trips | 0 | 0 | 0 | 0 | 0 | 0 | 0 | 0 | 0 | 0 | 0 | 0 |
| Hevenly Santa Fe Trips | 0 | 5 | 0 | 0 | 3 | 5 | 0 | 0 | 0 | 8 | 0 | 0 |
| Presbyterian Medical Offices | 0 | 4 | 0 | 0 | 12 | 8 | 0 | 0 | 0 | 4 | 0 | 0 |
| 5407 Beckner Rd. Trips | 0 | 0 | 17 | 0 | 0 | 0 | 27 | 40 | 28 | 0 | 8 | 0 |
| Subtotal (PM Peak) - Projects Above - | 0 | 22 | 17 | 3 | 23 | 19 | 27 | 63 | 44 | 24 | 18 | 0 |

2025
**NO BUILD**

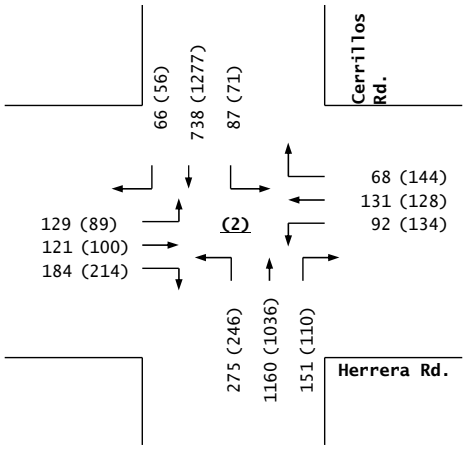


**Trips**

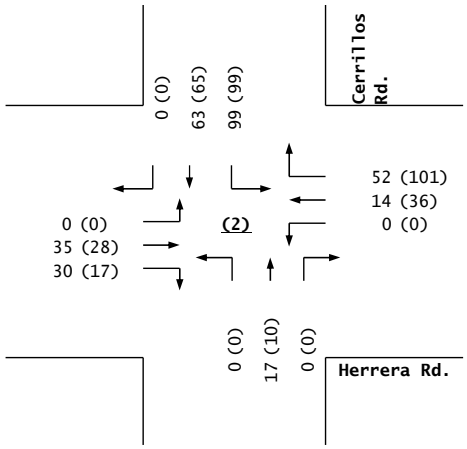


2025
**BUILD**

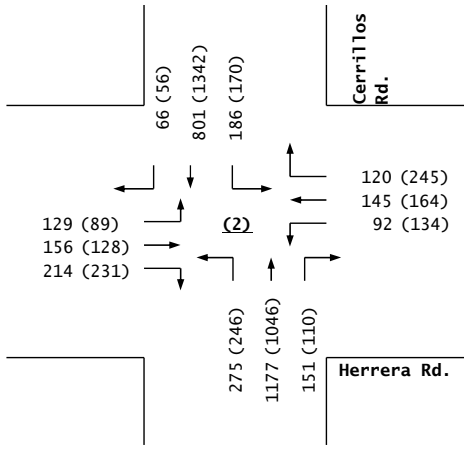


**Herrera Rd. / Cerrillos Rd.**

# *Las Soleras, Tracts 18A & 18B*

Projected Turning Movements Worksheet

***Beckner Rd. / Richards Ave.***

**INTERSECTION:** E-W Street: **Beckner Rd.** (3)

N-S Street: **Richards Ave.**

Year of Existing Counts 2022

Horizon Year **2025**

**Growth Rates** **2.00%** **2.00%** **2.00%** **2.00%**

| | Eastbound (Beckner Rd.) | | | Westbound (Beckner Rd.) | | | Northbound (Richards Ave.) | | | Southbound (Richards Ave.) | | |
|---|---|---|---|---|---|---|---|---|---|---|---|---|
| | Left | Thru | Right | Left | Thru | Right | Left | Thru | Right | Left | Thru | Right |
| Existing Volumes | 65 | 20 | 62 | 6 | 8 | 95 | 50 | 347 | 22 | 90 | 327 | 79 |
| Background Traffic Growth | 4 | 1 | 4 | 0 | 0 | 6 | 3 | 21 | 1 | 5 | 20 | 5 |
| *Subtotal* | 69 | 21 | 66 | 6 | 8 | 101 | 53 | 368 | 23 | 95 | 347 | 84 |
| Medical Office Buiding Trips | 12 | 5 | 9 | 0 | 9 | 0 | 23 | 0 | 0 | 0 | 0 | 35 |
| Vista de la Sierra Trips | 20 | 1 | 9 | 0 | 1 | 0 | 2 | 0 | 0 | 0 | 0 | 4 |
| Other Developments (See Below) | 67 | 5 | 30 | 0 | 4 | 0 | 33 | 0 | 0 | 0 | 0 | 68 |
| ***Subtotal (NO BUILD - A.M.)*** | ***168*** | ***32*** | ***114*** | ***6*** | ***22*** | ***101*** | ***111*** | ***368*** | ***23*** | ***95*** | ***347*** | ***191*** |
| *Percent Residential Trips Generated(Entering)* | *0.00%* | *0.00%* | *0.00%* | *0.00%* | ***1.00%*** | *0.00%* | ***4.00%*** | *0.00%* | *0.00%* | *0.00%* | *0.00%* | ***17.00%*** |
| *Percent Residential Trips Generated(Exiting)* | ***17.00%*** | ***1.00%*** | ***4.00%*** | *0.00%* | *0.00%* | *0.00%* | *0.00%* | *0.00%* | *0.00%* | *0.00%* | *0.00%* | *0.00%* |
| *Percent Commercial Trips Generated(Entering)* | *0.00%* | *0.00%* | *0.00%* | *0.00%* | ***1.00%*** | *0.00%* | ***9.00%*** | *0.00%* | *0.00%* | *0.00%* | *0.00%* | ***12.00%*** |
| *Percent Commercial Trips Generated(Exiting)* | ***12.00%*** | ***1.00%*** | ***9.00%*** | *0.00%* | *0.00%* | *0.00%* | *0.00%* | *0.00%* | *0.00%* | *0.00%* | *0.00%* | *0.00%* |
| *Percent Office Trips Generated(Entering)* | *0.00%* | *0.00%* | *0.00%* | *0.00%* | ***1.00%*** | *0.00%* | ***4.00%*** | *0.00%* | *0.00%* | *0.00%* | *0.00%* | ***10.00%*** |
| *Percent Office Trips Generated(Exiting)* | ***10.00%*** | ***1.00%*** | ***4.00%*** | *0.00%* | *0.00%* | *0.00%* | *0.00%* | *0.00%* | *0.00%* | *0.00%* | *0.00%* | *0.00%* |
| Total Trips Generated | 36 | 2 | 15 | 0 | 3 | 0 | 17 | 0 | 0 | 0 | 0 | 36 |
| **Total AM Peak Hour BUILD Volumes** | **204** | **34** | **129** | **6** | **25** | **101** | **128** | **368** | **23** | **95** | **347** | **227** |

| | Eastbound (Beckner Rd.) | | | Westbound (Beckner Rd.) | | | Northbound (Richards Ave.) | | | Southbound (Richards Ave.) | | |
|---|---|---|---|---|---|---|---|---|---|---|---|---|
| | Left | Thru | Right | Left | Thru | Right | Left | Thru | Right | Left | Thru | Right |
| Existing Volumes | 74 | 3 | 61 | 0 | 2 | 4 | 40 | 318 | 0 | 9 | 350 | 94 |
| Background Traffic Growth | 4 | 0 | 4 | 0 | 0 | 0 | 2 | 19 | 0 | 1 | 21 | 6 |
| *Subtotal* | 78 | 3 | 65 | 0 | 2 | 4 | 42 | 337 | 0 | 10 | 371 | 100 |
| Medical Office Buiding Trips | 47 | 1 | 18 | 0 | 1 | 0 | 3 | 0 | 0 | 0 | 0 | 26 |
| Vista de la Sierra Trips | 7 | 1 | 3 | 0 | 1 | 0 | 1 | 0 | 0 | 0 | 0 | 1 |
| Other Developments (See Below) | 46 | 4 | 21 | 0 | 5 | 0 | 79 | 0 | 0 | 0 | 0 | 150 |
| ***Subtotal (NO BUILD - P.M.)*** | ***178*** | ***9*** | ***107*** | ***0*** | ***9*** | ***4*** | ***125*** | ***337*** | ***0*** | ***10*** | ***371*** | ***277*** |
| *Percent Residential Trips Generated(Entering)* | *0.00%* | *0.00%* | *0.00%* | *0.00%* | ***1.00%*** | *0.00%* | ***4.00%*** | *0.00%* | *0.00%* | *0.00%* | *0.00%* | ***17.00%*** |
| *Percent Residential Trips Generated(Exiting)* | ***17.00%*** | ***1.00%*** | ***4.00%*** | *0.00%* | *0.00%* | *0.00%* | *0.00%* | *0.00%* | *0.00%* | *0.00%* | *0.00%* | *0.00%* |
| *Percent Commercial Trips Generated(Entering)* | *0.00%* | *0.00%* | *0.00%* | *0.00%* | ***1.00%*** | *0.00%* | ***9.00%*** | *0.00%* | *0.00%* | *0.00%* | *0.00%* | ***12.00%*** |
| *Percent Commercial Trips Generated(Exiting)* | ***12.00%*** | ***1.00%*** | ***9.00%*** | *0.00%* | *0.00%* | *0.00%* | *0.00%* | *0.00%* | *0.00%* | *0.00%* | *0.00%* | *0.00%* |
| *Percent Office Trips Generated(Entering)* | *0.00%* | *0.00%* | *0.00%* | *0.00%* | ***1.00%*** | *0.00%* | ***4.00%*** | *0.00%* | *0.00%* | *0.00%* | *0.00%* | ***10.00%*** |
| *Percent Office Trips Generated(Exiting)* | ***10.00%*** | ***1.00%*** | ***4.00%*** | *0.00%* | *0.00%* | *0.00%* | *0.00%* | *0.00%* | *0.00%* | *0.00%* | *0.00%* | *0.00%* |
| Total Trips Generated | 47 | 3 | 17 | 0 | 3 | 0 | 15 | 0 | 0 | 0 | 0 | 46 |
| **Total PM Peak Hour BUILD Volumes** | **225** | **12** | **124** | **0** | **12** | **4** | **140** | **337** | **0** | **10** | **371** | **323** |

| | Entering | Exiting | | |
|---|---|---|---|---|
| Number of Residential Trips Generated | **126** | **44** | A.M. | 100% Residential Development |
| | **177** | **105** | P.M. | |
| Number of Commercial Trips Generated | **94** | **87** | A.M. | 100% Commercial Development |
| | **49** | **49** | P.M. | |
| Number of Office Trips Generated | **175** | **46** | A.M. | 100% Office Development |
| | **98** | **231** | P.M. | |

AM Peak - Other Developments

| | | | | | | | | | | | | |
|---|---|---|---|---|---|---|---|---|---|---|---|---|
| Cielo Apts. Trips | 10 | 1 | 7 | 0 | 1 | 0 | 1 | 0 | 0 | 0 | 0 | 4 |
| Village at Las Soleras Trip | 0 | 0 | 0 | 0 | 0 | 0 | 0 | 0 | 0 | 0 | 0 | 0 |
| Cavan Development Trips | 6 | 0 | 3 | 0 | 1 | 0 | 1 | 0 | 0 | 0 | 0 | 2 |
| 5201 Beckner Rd. Trips | 25 | 1 | 14 | 0 | 1 | 0 | 5 | 0 | 0 | 0 | 0 | 10 |
| Hevenly Santa Fe Trips | 24 | 2 | 5 | 0 | 1 | 0 | 2 | 0 | 0 | 0 | 0 | 8 |
| Presbyterian Medical Offices | 2 | 1 | 1 | 0 | 0 | 0 | 3 | 0 | 0 | 0 | 0 | 4 |
| 5407 Beckner Rd. Trips | 0 | 0 | 0 | 0 | 0 | 0 | 21 | 0 | 0 | 0 | 0 | 40 |
| Subtotal (AM Peak) - Projects Above - | 67 | 5 | 30 | 0 | 4 | 0 | 33 | 0 | 0 | 0 | 0 | 68 |

PM Peak - Other Developments

| | | | | | | | | | | | | |
|---|---|---|---|---|---|---|---|---|---|---|---|---|
| Cielo Apts. Trips | 7 | 1 | 4 | 0 | 1 | 0 | 4 | 0 | 0 | 0 | 0 | 8 |
| Village at Las Soleras Trip | 0 | 0 | 0 | 0 | 0 | 0 | 0 | 0 | 0 | 0 | 0 | 0 |
| Cavan Development Trips | 4 | 0 | 2 | 0 | 1 | 0 | 3 | 0 | 0 | 0 | 0 | 8 |
| 5201 Beckner Rd. Trips | 15 | 1 | 9 | 0 | 1 | 0 | 21 | 0 | 0 | 0 | 0 | 25 |
| Hevenly Santa Fe Trips | 16 | 1 | 4 | 0 | 2 | 0 | 6 | 0 | 0 | 0 | 0 | 27 |
| Presbyterian Medical Offices | 4 | 1 | 2 | 0 | 0 | 0 | 1 | 0 | 0 | 0 | 0 | 2 |
| 5407 Beckner Rd. Trips | 0 | 0 | 0 | 0 | 0 | 0 | 44 | 0 | 0 | 0 | 0 | 80 |
| Subtotal (PM Peak) - Projects Above - | 46 | 4 | 21 | 0 | 5 | 0 | 79 | 0 | 0 | 0 | 0 | 150 |

2025
**NO BUILD**

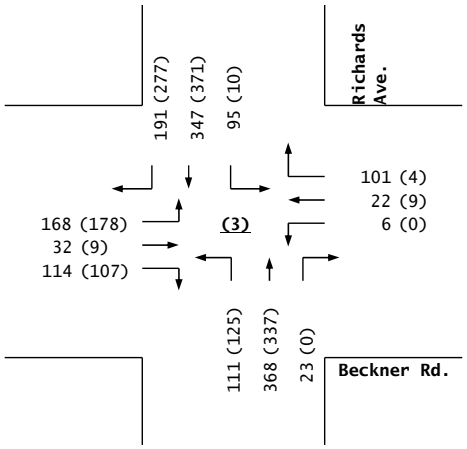


**Trips**

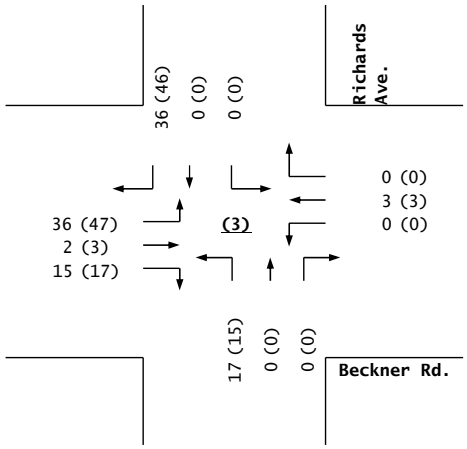


2025
**BUILD**

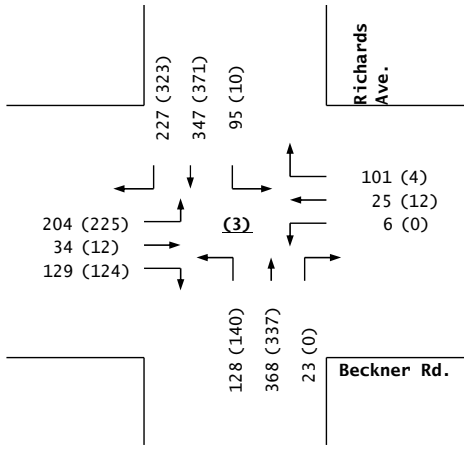


**Beckner Rd. / Richards Ave.**

# *Las Soleras, Tracts 18A & 18B*

Projected Turning Movements Worksheet

***Beckner Rd. / Wellness Way***

**INTERSECTION:** E-W Street: **Beckner Rd.** (4)

N-S Street: **Wellness Way**

Year of Existing Counts 2022

Horizon Year **2025**

**Growth Rates** **2.00%** **2.00%** **2.00%** **2.00%**

| | Eastbound (Beckner Rd.) | | | Westbound (Beckner Rd.) | | | Northbound (Wellness Way) | | | Southbound (Wellness Way) | | |
|---|---|---|---|---|---|---|---|---|---|---|---|---|
| | Left | Thru | Right | Left | Thru | Right | Left | Thru | Right | Left | Thru | Right |
| Existing Volumes | 26 | 136 | 0 | 0 | 71 | 61 | 0 | 0 | 0 | 43 | 0 | 4 |
| Background Traffic Growth | 2 | 8 | 0 | 0 | 4 | 4 | 0 | 0 | 0 | 3 | 0 | 0 |
| *Subtotal* | 28 | 144 | 0 | 0 | 75 | 65 | 0 | 0 | 0 | 46 | 0 | 4 |
| Medical Office Buiding Trips | 0 | 105 | 0 | 0 | 14 | 5 | 0 | 0 | 0 | 19 | 0 | 0 |
| Vista de la Sierra Trips | 0 | 28 | 0 | 0 | 22 | 0 | 0 | 0 | 0 | 0 | 0 | 0 |
| Other Developments (See Below) | 5 | 97 | 0 | 0 | 94 | 31 | 0 | 0 | 0 | 69 | 0 | 52 |
| ***Subtotal (NO BUILD - A.M.)*** | ***33*** | ***374*** | ***0*** | ***0*** | ***205*** | ***101*** | ***0*** | ***0*** | ***0*** | ***134*** | ***0*** | ***56*** |
| *Percent Residential Trips Generated(Entering)* | *0.00%* | ***33.00%*** | *0.00%* | *0.00%* | *0.00%* | *0.00%* | *0.00%* | *0.00%* | *0.00%* | ***36.00%*** | *0.00%* | *0.00%* |
| *Percent Residential Trips Generated(Exiting)* | *0.00%* | *0.00%* | *0.00%* | *0.00%* | ***33.00%*** | ***36.00%*** | *0.00%* | *0.00%* | *0.00%* | *0.00%* | *0.00%* | *0.00%* |
| *Percent Commercial Trips Generated(Entering)* | *0.00%* | ***23.00%*** | *0.00%* | *0.00%* | *0.00%* | *0.00%* | *0.00%* | *0.00%* | *0.00%* | ***40.00%*** | *0.00%* | *0.00%* |
| *Percent Commercial Trips Generated(Exiting)* | *0.00%* | *0.00%* | *0.00%* | *0.00%* | ***23.00%*** | ***40.00%*** | *0.00%* | *0.00%* | *0.00%* | *0.00%* | *0.00%* | *0.00%* |
| *Percent Office Trips Generated(Entering)* | *0.00%* | ***37.00%*** | *0.00%* | *0.00%* | *0.00%* | *0.00%* | *0.00%* | *0.00%* | *0.00%* | ***43.00%*** | *0.00%* | *0.00%* |
| *Percent Office Trips Generated(Exiting)* | *0.00%* | *0.00%* | *0.00%* | *0.00%* | ***37.00%*** | ***43.00%*** | *0.00%* | *0.00%* | *0.00%* | *0.00%* | *0.00%* | *0.00%* |
| Total Trips Generated | 0 | 102 | 0 | 0 | 79 | 100 | 0 | 0 | 0 | 129 | 0 | 0 |
| **Total AM Peak Hour BUILD Volumes** | **33** | **476** | **0** | **0** | **284** | **201** | **0** | **0** | **0** | **263** | **0** | **56** |

| | Eastbound (Beckner Rd.) | | | Westbound (Beckner Rd.) | | | Northbound (Wellness Way) | | | Southbound (Wellness Way) | | |
|---|---|---|---|---|---|---|---|---|---|---|---|---|
| | Left | Thru | Right | Left | Thru | Right | Left | Thru | Right | Left | Thru | Right |
| Existing Volumes | 17 | 66 | 0 | 0 | 86 | 51 | 0 | 0 | 0 | 59 | 0 | 100 |
| Background Traffic Growth | 1 | 4 | 0 | 0 | 5 | 3 | 0 | 0 | 0 | 4 | 0 | 6 |
| *Subtotal* | 18 | 70 | 0 | 0 | 91 | 54 | 0 | 0 | 0 | 63 | 0 | 106 |
| Medical Office Buiding Trips | 0 | 41 | 0 | 0 | 60 | 42 | 0 | 0 | 0 | 9 | 0 | 0 |
| Vista de la Sierra Trips | 0 | 17 | 0 | 0 | 12 | 0 | 0 | 0 | 0 | 0 | 0 | 0 |
| Other Developments (See Below) | 17 | 96 | 0 | 0 | 128 | 74 | 0 | 0 | 0 | 48 | 0 | 44 |
| ***Subtotal (NO BUILD - P.M.)*** | ***35*** | ***224*** | ***0*** | ***0*** | ***291*** | ***170*** | ***0*** | ***0*** | ***0*** | ***120*** | ***0*** | ***150*** |
| *Percent Residential Trips Generated(Entering)* | *0.00%* | ***33.00%*** | *0.00%* | *0.00%* | *0.00%* | *0.00%* | *0.00%* | *0.00%* | *0.00%* | ***36.00%*** | *0.00%* | *0.00%* |
| *Percent Residential Trips Generated(Exiting)* | *0.00%* | *0.00%* | *0.00%* | *0.00%* | ***33.00%*** | ***36.00%*** | *0.00%* | *0.00%* | *0.00%* | *0.00%* | *0.00%* | *0.00%* |
| *Percent Commercial Trips Generated(Entering)* | *0.00%* | ***23.00%*** | *0.00%* | *0.00%* | *0.00%* | *0.00%* | *0.00%* | *0.00%* | *0.00%* | ***40.00%*** | *0.00%* | *0.00%* |
| *Percent Commercial Trips Generated(Exiting)* | *0.00%* | *0.00%* | *0.00%* | *0.00%* | ***23.00%*** | ***40.00%*** | *0.00%* | *0.00%* | *0.00%* | *0.00%* | *0.00%* | *0.00%* |
| *Percent Office Trips Generated(Entering)* | *0.00%* | ***37.00%*** | *0.00%* | *0.00%* | *0.00%* | *0.00%* | *0.00%* | *0.00%* | *0.00%* | ***43.00%*** | *0.00%* | *0.00%* |
| *Percent Office Trips Generated(Exiting)* | *0.00%* | *0.00%* | *0.00%* | *0.00%* | ***37.00%*** | ***43.00%*** | *0.00%* | *0.00%* | *0.00%* | *0.00%* | *0.00%* | *0.00%* |
| Total Trips Generated | 0 | 105 | 0 | 0 | 131 | 157 | 0 | 0 | 0 | 126 | 0 | 0 |
| **Total PM Peak Hour BUILD Volumes** | **35** | **329** | **0** | **0** | **422** | **327** | **0** | **0** | **0** | **246** | **0** | **150** |

| | Entering | Exiting | | |
|---|---|---|---|---|
| Number of Residential Trips Generated | **126** | **44** | A.M. | 100% Residential Development |
| | **177** | **105** | P.M. | |
| Number of Commercial Trips Generated | **94** | **87** | A.M. | 100% Commercial Development |
| | **49** | **49** | P.M. | |
| Number of Office Trips Generated | **175** | **46** | A.M. | 100% Office Development |
| | **98** | **231** | P.M. | |

AM Peak - Other Developments

| | | | | | | | | | | | | |
|---|---|---|---|---|---|---|---|---|---|---|---|---|
| Cielo Apts. Trips | 0 | 14 | 0 | 0 | 5 | 0 | 0 | 0 | 0 | 0 | 0 | 0 |
| Village at Las Soleras Trip | 0 | 0 | 0 | 0 | 0 | 0 | 0 | 0 | 0 | 0 | 0 | 0 |
| Cavan Development Trips | 0 | 9 | 0 | 0 | 3 | 0 | 0 | 0 | 0 | 0 | 0 | 0 |
| 5201 Beckner Rd. Trips | 5 | 0 | 0 | 0 | 0 | 15 | 0 | 0 | 0 | 49 | 0 | 18 |
| Hevenly Santa Fe Trips | 0 | 8 | 0 | 0 | 25 | 12 | 0 | 0 | 0 | 4 | 0 | 0 |
| Presbyterian Medical Offices | 0 | 36 | 0 | 0 | 9 | 4 | 0 | 0 | 0 | 16 | 0 | 0 |
| 5407 Beckner Rd. Trips | 0 | 30 | 0 | 0 | 52 | 0 | 0 | 0 | 0 | 0 | 0 | 34 |
| Subtotal (AM Peak) - Projects Above - | 5 | 97 | 0 | 0 | 94 | 31 | 0 | 0 | 0 | 69 | 0 | 52 |

PM Peak - Other Developments

| | | | | | | | | | | | | |
|---|---|---|---|---|---|---|---|---|---|---|---|---|
| Cielo Apts. Trips | 0 | 11 | 0 | 0 | 12 | 0 | 0 | 0 | 0 | 0 | 0 | 0 |
| Village at Las Soleras Trip | 0 | 0 | 0 | 0 | 0 | 0 | 0 | 0 | 0 | 0 | 0 | 0 |
| Cavan Development Trips | 0 | 11 | 0 | 0 | 6 | 0 | 0 | 0 | 0 | 0 | 0 | 0 |
| 5201 Beckner Rd. Trips | 17 | 0 | 0 | 0 | 0 | 46 | 0 | 0 | 0 | 27 | 0 | 10 |
| Hevenly Santa Fe Trips | 0 | 28 | 0 | 0 | 16 | 8 | 0 | 0 | 0 | 13 | 0 | 0 |
| Presbyterian Medical Offices | 0 | 16 | 0 | 0 | 44 | 20 | 0 | 0 | 0 | 8 | 0 | 0 |
| 5407 Beckner Rd. Trips | 0 | 30 | 0 | 0 | 50 | 0 | 0 | 0 | 0 | 0 | 0 | 34 |
| Subtotal (PM Peak) - Projects Above - | 17 | 96 | 0 | 0 | 128 | 74 | 0 | 0 | 0 | 48 | 0 | 44 |

2025
**NO BUILD**

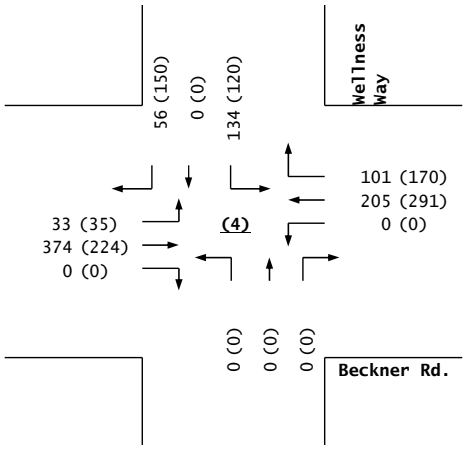


**Trips**

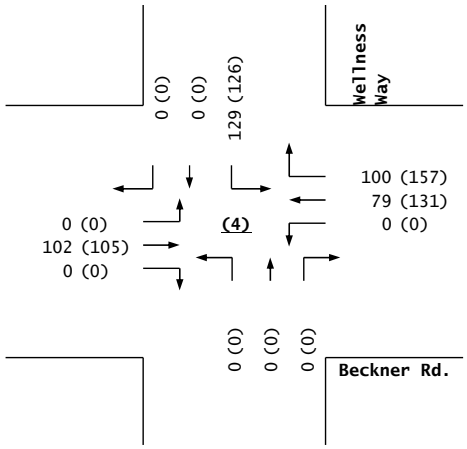


2025
**BUILD**

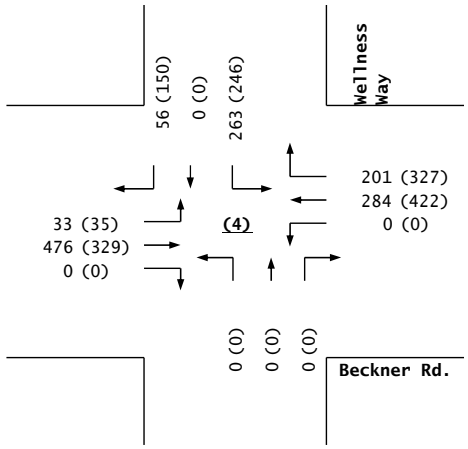


**Beckner Rd. / Wellness Way**

# *Las Soleras, Tracts 18A & 18B*

Projected Turning Movements Worksheet

***Beckner Rd. / Las Soleras Dr.***

**INTERSECTION:** E-W Street: **Beckner Rd.** (5)

N-S Street: **Las Soleras Dr.**

Year of Existing Counts 2022

Horizon Year **2025**

| **Growth Rates** | **2.00%** | | | **2.00%** | | | **2.00%** | | | **2.00%** | | |
|---|---|---|---|---|---|---|---|---|---|---|---|---|
| | **Eastbound (Beckner Rd.)** | | | **Westbound (Beckner Rd.)** | | | **Northbound (Las Soleras Dr.)** | | | **Southbound (Las Soleras Dr.)** | | |
| | Left | Thru | Right | Left* | Thru | Right | Left | Thru | Right | Left | Thru | Right |
| Existing Volumes | 4 | 150 | 0 | 0 | 140 | 1 | 0 | 0 | 0 | 1 | 0 | 2 |
| Background Traffic Growth | 0 | 9 | 0 | 0 | 8 | 0 | 0 | 0 | 0 | 0 | 0 | 0 |
| *Subtotal* | 4 | 159 | 0 | 0 | 148 | 1 | 0 | 0 | 0 | 1 | 0 | 2 |
| Medical Office Buiding Trips | 0 | 105 | 0 | 0 | 14 | 0 | 0 | 0 | 0 | 0 | 0 | 0 |
| Vista de la Sierra Trips | 0 | 28 | 0 | 0 | 22 | 0 | 0 | 0 | 0 | 0 | 0 | 0 |
| Other Developments (See Below) | 3 | 112 | 9 | 29 | 103 | 0 | 16 | 0 | 4 | 7 | 44 | 8 |
| ***Subtotal (NO BUILD - A.M.)*** | ***7*** | ***404*** | ***9*** | ***29*** | ***287*** | ***1*** | ***16*** | ***0*** | ***4*** | ***8*** | ***44*** | ***10*** |
| *Percent Residential Trips Generated(Entering)* | *0.00%* | ***69.00%*** | *0.00%* | *0.00%* | *0.00%* | *0.00%* | *0.00%* | *0.00%* | *0.00%* | *0.00%* | *0.00%* | *0.00%* |
| *Percent Residential Trips Generated(Exiting)* | *0.00%* | *0.00%* | *0.00%* | *0.00%* | ***69.00%*** | *0.00%* | *0.00%* | *0.00%* | *0.00%* | *0.00%* | *0.00%* | *0.00%* |
| *Percent Commercial Trips Generated(Entering)* | *0.00%* | ***63.00%*** | *0.00%* | *0.00%* | *0.00%* | *0.00%* | *0.00%* | *0.00%* | *0.00%* | ***1.00%*** | *0.00%* | *0.00%* |
| *Percent Commercial Trips Generated(Exiting)* | *0.00%* | *0.00%* | *0.00%* | *0.00%* | ***63.00%*** | ***1.00%*** | *0.00%* | *0.00%* | *0.00%* | *0.00%* | *0.00%* | *0.00%* |
| *Percent Office Trips Generated(Entering)* | *0.00%* | ***80.00%*** | *0.00%* | *0.00%* | *0.00%* | *0.00%* | *0.00%* | *0.00%* | *0.00%* | *0.00%* | *0.00%* | *0.00%* |
| *Percent Office Trips Generated(Exiting)* | *0.00%* | *0.00%* | *0.00%* | *0.00%* | ***60.00%*** | *0.00%* | *0.00%* | *0.00%* | *0.00%* | *0.00%* | *0.00%* | *0.00%* |
| Total Trips Generated | 0 | 229 | 0 | 0 | 170 | 1 | 0 | 0 | 0 | 1 | 0 | 0 |
| **Total AM Peak Hour BUILD Volumes** | **7** | **633** | **9** | **29** | **457** | **2** | **16** | **0** | **4** | **9** | **44** | **10** |

*** - 4 LT / 25 U-TURNS**

| | **Eastbound (Beckner Rd.)** | | | **Westbound (Beckner Rd.)** | | | **Northbound (Las Soleras Dr.)** | | | **Southbound (Las Soleras Dr.)** | | |
|---|---|---|---|---|---|---|---|---|---|---|---|---|
| | Left | Thru | Right | Left* | Thru | Right | Left | Thru | Right | Left | Thru | Right |
| Existing Volumes | 7 | 130 | 0 | 0 | 95 | 10 | 0 | 0 | 0 | 7 | 0 | 5 |
| Background Traffic Growth | 0 | 8 | 0 | 0 | 6 | 1 | 0 | 0 | 0 | 0 | 0 | 0 |
| *Subtotal* | 7 | 138 | 0 | 0 | 101 | 11 | 0 | 0 | 0 | 7 | 0 | 5 |
| Medical Office Buiding Trips | 0 | 41 | 0 | 0 | 102 | 0 | 0 | 0 | 0 | 0 | 0 | 0 |
| Vista de la Sierra Trips | 0 | 17 | 0 | 0 | 12 | 0 | 0 | 0 | 0 | 0 | 0 | 0 |
| Other Developments (See Below) | 9 | 106 | 44 | 20 | 139 | 0 | 60 | 0 | 12 | 4 | 20 | 5 |
| ***Subtotal (NO BUILD - P.M.)*** | ***16*** | ***302*** | ***44*** | ***20*** | ***354*** | ***11*** | ***60*** | ***0*** | ***12*** | ***11*** | ***20*** | ***10*** |
| *Percent Residential Trips Generated(Entering)* | *0.00%* | ***69.00%*** | *0.00%* | *0.00%* | *0.00%* | *0.00%* | *0.00%* | *0.00%* | *0.00%* | *0.00%* | *0.00%* | *0.00%* |
| *Percent Residential Trips Generated(Exiting)* | *0.00%* | *0.00%* | *0.00%* | *0.00%* | ***69.00%*** | *0.00%* | *0.00%* | *0.00%* | *0.00%* | *0.00%* | *0.00%* | *0.00%* |
| *Percent Commercial Trips Generated(Entering)* | *0.00%* | ***63.00%*** | *0.00%* | *0.00%* | *0.00%* | *0.00%* | *0.00%* | *0.00%* | *0.00%* | ***1.00%*** | *0.00%* | *0.00%* |
| *Percent Commercial Trips Generated(Exiting)* | *0.00%* | *0.00%* | *0.00%* | *0.00%* | ***63.00%*** | ***1.00%*** | *0.00%* | *0.00%* | *0.00%* | *0.00%* | *0.00%* | *0.00%* |
| *Percent Office Trips Generated(Entering)* | *0.00%* | ***80.00%*** | *0.00%* | *0.00%* | *0.00%* | *0.00%* | *0.00%* | *0.00%* | *0.00%* | *0.00%* | *0.00%* | *0.00%* |
| *Percent Office Trips Generated(Exiting)* | *0.00%* | *0.00%* | *0.00%* | *0.00%* | ***60.00%*** | *0.00%* | *0.00%* | *0.00%* | *0.00%* | *0.00%* | *0.00%* | *0.00%* |
| Total Trips Generated | 0 | 231 | 0 | 0 | 242 | 0 | 0 | 0 | 0 | 0 | 0 | 0 |
| **Total PM Peak Hour BUILD Volumes** | **16** | **533** | **44** | **20** | **596** | **11** | **60** | **0** | **12** | **11** | **20** | **10** |

*** - 4 LT / 16 U-TURNS**

| | Entering | Exiting | | |
|---|---|---|---|---|
| Number of Residential Trips Generated | **126** | **44** | A.M. | 100% Residential Development |
| | **177** | **105** | P.M. | |
| Number of Commercial Trips Generated | **94** | **87** | A.M. | 100% Commercial Development |
| | **49** | **49** | P.M. | |
| Number of Office Trips Generated | **175** | **46** | A.M. | 100% Office Development |
| | **98** | **231** | P.M. | |

AM Peak - Other Developments

| | | | | | | | | | | | | |
|---|---|---|---|---|---|---|---|---|---|---|---|---|
| Cielo Apts. Trips | 0 | 14 | 0 | 0 | 5 | 0 | 0 | 0 | 0 | 0 | 0 | 0 |
| Village at Las Soleras Trip | 0 | 0 | 0 | 0 | 0 | 0 | 0 | 0 | 0 | 0 | 0 | 0 |
| Cavan Development Trips | 0 | 9 | 0 | 0 | 3 | 0 | 0 | 0 | 0 | 0 | 0 | 0 |
| 5201 Beckner Rd. Trips | 0 | 49 | 0 | 0 | 15 | 0 | 0 | 0 | 0 | 0 | 0 | 0 |
| Hevenly Santa Fe Trips | 3 | 10 | 0 | 25 | 28 | 0 | 0 | 0 | 0 | 7 | 0 | 8 |
| Presbyterian Medical Offices | 0 | 0 | 9 | 4 | 0 | 0 | 16 | 0 | 4 | 0 | 44 | 0 |
| 5407 Beckner Rd. Trips | 0 | 30 | 0 | 0 | 52 | 0 | 0 | 0 | 0 | 0 | 0 | 0 |
| Subtotal (AM Peak) - Projects Above - | 3 | 112 | 9 | 29 | 103 | 0 | 16 | 0 | 4 | 7 | 44 | 8 |

PM Peak - Other Developments

| | | | | | | | | | | | | |
|---|---|---|---|---|---|---|---|---|---|---|---|---|
| Cielo Apts. Trips | 0 | 11 | 0 | 0 | 12 | 0 | 0 | 0 | 0 | 0 | 0 | 0 |
| Village at Las Soleras Trip | 0 | 0 | 0 | 0 | 0 | 0 | 0 | 0 | 0 | 0 | 0 | 0 |
| Cavan Development Trips | 0 | 6 | 0 | 0 | 12 | 0 | 0 | 0 | 0 | 0 | 0 | 0 |
| 5201 Beckner Rd. Trips | 0 | 27 | 0 | 0 | 46 | 0 | 0 | 0 | 0 | 0 | 0 | 0 |
| Hevenly Santa Fe Trips | 9 | 32 | 0 | 16 | 19 | 0 | 0 | 0 | 0 | 4 | 0 | 5 |
| Presbyterian Medical Offices | 0 | 0 | 44 | 4 | 0 | 0 | 60 | 0 | 12 | 0 | 20 | 0 |
| 5407 Beckner Rd. Trips | 0 | 30 | 0 | 0 | 50 | 0 | 0 | 0 | 0 | 0 | 0 | 0 |
| Subtotal (PM Peak) - Projects Above - | 9 | 106 | 44 | 20 | 139 | 0 | 60 | 0 | 12 | 4 | 20 | 5 |

2025
**NO BUILD**

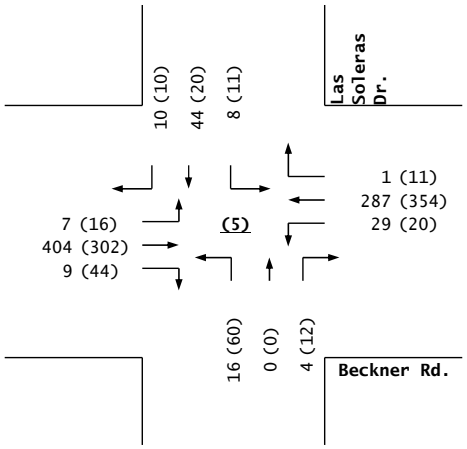


**Trips**

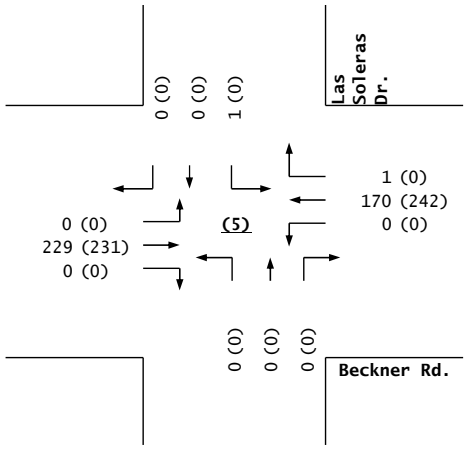


2025
**BUILD**

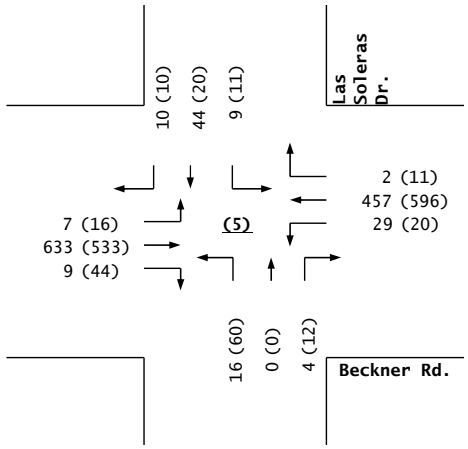


**Beckner Rd. / Las Soleras Dr.**

# *Las Soleras, Tracts 18A & 18B*

Projected Turning Movements Worksheet

***Beckner Rd. / Rail Runner Rd.***

**INTERSECTION:** E-W Street: **Beckner Rd.** (6)

N-S Street: **Rail Runner Rd.**

Year of Existing Counts 2022

Horizon Year **2025**

**Growth Rates** **2.00%** **2.00%** **2.00%** **2.00%**

| | Eastbound (Beckner Rd.) | | | Westbound (Beckner Rd.) | | | Northbound (Rail Runner Rd.) | | | Southbound (Rail Runner Rd.) | | |
|---|---|---|---|---|---|---|---|---|---|---|---|---|
| | Left | Thru | Right | Left | Thru | Right | Left | Thru | Right | Left | Thru | Right |
| Existing Volumes | 27 | 122 | 0 | 0 | 110 | 60 | 0 | 0 | 0 | 17 | 0 | 29 |
| Background Traffic Growth | 2 | 7 | 0 | 0 | 7 | 4 | 0 | 0 | 0 | 1 | 0 | 2 |
| *Subtotal* | 29 | 129 | 0 | 0 | 117 | 64 | 0 | 0 | 0 | 18 | 0 | 31 |
| Medical Office Buiding Trips | 0 | 105 | 0 | 0 | 14 | 0 | 0 | 0 | 0 | 0 | 0 | 0 |
| Vista de la Sierra Trips | 0 | 28 | 0 | 0 | 22 | 0 | 0 | 0 | 0 | 0 | 0 | 0 |
| Other Developments (See Below) | 21 | 91 | 0 | 0 | 84 | 6 | 0 | 0 | 0 | 17 | 0 | 18 |
| ***Subtotal (NO BUILD - A.M.)*** | ***50*** | ***353*** | ***0*** | ***0*** | ***237*** | ***70*** | ***0*** | ***0*** | ***0*** | ***35*** | ***0*** | ***49*** |
| *Percent Residential Trips Generated(Entering)* | *0.00%* | ***69.00%*** | *0.00%* | *0.00%* | *0.00%* | *0.00%* | *0.00%* | *0.00%* | *0.00%* | ***8.00%*** | *0.00%* | *0.00%* |
| *Percent Residential Trips Generated(Exiting)* | *0.00%* | *0.00%* | *0.00%* | *0.00%* | ***69.00%*** | ***8.00%*** | *0.00%* | *0.00%* | *0.00%* | *0.00%* | *0.00%* | *0.00%* |
| *Percent Commercial Trips Generated(Entering)* | *0.00%* | ***64.00%*** | *0.00%* | *0.00%* | *0.00%* | *0.00%* | *0.00%* | *0.00%* | *0.00%* | ***13.00%*** | *0.00%* | *0.00%* |
| *Percent Commercial Trips Generated(Exiting)* | *0.00%* | *0.00%* | *0.00%* | *0.00%* | ***64.00%*** | ***13.00%*** | *0.00%* | *0.00%* | *0.00%* | *0.00%* | *0.00%* | *0.00%* |
| *Percent Office Trips Generated(Entering)* | *0.00%* | ***80.00%*** | *0.00%* | *0.00%* | *0.00%* | *0.00%* | *0.00%* | *0.00%* | *0.00%* | ***4.00%*** | *0.00%* | *0.00%* |
| *Percent Office Trips Generated(Exiting)* | *0.00%* | *0.00%* | *0.00%* | *0.00%* | ***80.00%*** | ***4.00%*** | *0.00%* | *0.00%* | *0.00%* | *0.00%* | *0.00%* | *0.00%* |
| Total Trips Generated | 0 | 230 | 0 | 0 | 180 | 23 | 0 | 0 | 0 | 23 | 0 | 0 |
| **Total AM Peak Hour BUILD Volumes** | **50** | **583** | **0** | **0** | **417** | **93** | **0** | **0** | **0** | **58** | **0** | **49** |

| | Eastbound (Beckner Rd.) | | | Westbound (Beckner Rd.) | | | Northbound (Rail Runner Rd.) | | | Southbound (Rail Runner Rd.) | | |
|---|---|---|---|---|---|---|---|---|---|---|---|---|
| | Left | Thru | Right | Left | Thru | Right | Left | Thru | Right | Left | Thru | Right |
| Existing Volumes | 17 | 122 | 0 | 0 | 90 | 30 | 0 | 0 | 0 | 21 | 0 | 19 |
| Background Traffic Growth | 1 | 7 | 0 | 0 | 5 | 2 | 0 | 0 | 0 | 1 | 0 | 1 |
| *Subtotal* | 18 | 129 | 0 | 0 | 95 | 32 | 0 | 0 | 0 | 22 | 0 | 20 |
| Medical Office Buiding Trips | 0 | 41 | 0 | 0 | 102 | 0 | 0 | 0 | 0 | 0 | 0 | 0 |
| Vista de la Sierra Trips | 0 | 17 | 0 | 0 | 12 | 0 | 0 | 0 | 0 | 0 | 0 | 0 |
| Other Developments (See Below) | 24 | 66 | 0 | 0 | 141 | 19 | 0 | 0 | 0 | 11 | 0 | 27 |
| ***Subtotal (NO BUILD - P.M.)*** | ***42*** | ***253*** | ***0*** | ***0*** | ***350*** | ***51*** | ***0*** | ***0*** | ***0*** | ***33*** | ***0*** | ***47*** |
| *Percent Residential Trips Generated(Entering)* | *0.00%* | ***69.00%*** | *0.00%* | *0.00%* | *0.00%* | *0.00%* | *0.00%* | *0.00%* | *0.00%* | ***8.00%*** | *0.00%* | *0.00%* |
| *Percent Residential Trips Generated(Exiting)* | *0.00%* | *0.00%* | *0.00%* | *0.00%* | ***69.00%*** | ***8.00%*** | *0.00%* | *0.00%* | *0.00%* | *0.00%* | *0.00%* | *0.00%* |
| *Percent Commercial Trips Generated(Entering)* | *0.00%* | ***64.00%*** | *0.00%* | *0.00%* | *0.00%* | *0.00%* | *0.00%* | *0.00%* | *0.00%* | ***13.00%*** | *0.00%* | *0.00%* |
| *Percent Commercial Trips Generated(Exiting)* | *0.00%* | *0.00%* | *0.00%* | *0.00%* | ***64.00%*** | ***13.00%*** | *0.00%* | *0.00%* | *0.00%* | *0.00%* | *0.00%* | *0.00%* |
| *Percent Office Trips Generated(Entering)* | *0.00%* | ***80.00%*** | *0.00%* | *0.00%* | *0.00%* | *0.00%* | *0.00%* | *0.00%* | *0.00%* | ***4.00%*** | *0.00%* | *0.00%* |
| *Percent Office Trips Generated(Exiting)* | *0.00%* | *0.00%* | *0.00%* | *0.00%* | ***80.00%*** | ***4.00%*** | *0.00%* | *0.00%* | *0.00%* | *0.00%* | *0.00%* | *0.00%* |
| Total Trips Generated | 0 | 231 | 0 | 0 | 288 | 23 | 0 | 0 | 0 | 24 | 0 | 0 |
| **Total PM Peak Hour BUILD Volumes** | **42** | **484** | **0** | **0** | **638** | **74** | **0** | **0** | **0** | **57** | **0** | **47** |

| | Entering | Exiting | | |
|---|---|---|---|---|
| Number of Residential Trips Generated | **126** | **44** | A.M. | 100% Residential Development |
| | **177** | **105** | P.M. | |
| Number of Commercial Trips Generated | **94** | **87** | A.M. | 100% Commercial Development |
| | **49** | **49** | P.M. | |
| Number of Office Trips Generated | **175** | **46** | A.M. | 100% Office Development |
| | **98** | **231** | P.M. | |

AM Peak - Other Developments

| | | | | | | | | | | | | |
|---|---|---|---|---|---|---|---|---|---|---|---|---|
| Cielo Apts. Trips | 0 | 14 | 0 | 0 | 5 | 0 | 0 | 0 | 0 | 0 | 0 | 0 |
| Village at Las Soleras Trip | 0 | 0 | 0 | 0 | 0 | 0 | 0 | 0 | 0 | 0 | 0 | 0 |
| Cavan Development Trips | 0 | 9 | 0 | 0 | 3 | 0 | 0 | 0 | 0 | 0 | 0 | 0 |
| 5201 Beckner Rd. Trips | 0 | 49 | 0 | 0 | 15 | 0 | 0 | 0 | 0 | 0 | 0 | 0 |
| Hevenly Santa Fe Trips | 21 | 15 | 0 | 0 | 5 | 6 | 0 | 0 | 0 | 17 | 0 | 18 |
| Presbyterian Medical Offices | 0 | 4 | 0 | 0 | 4 | 0 | 0 | 0 | 0 | 0 | 0 | 0 |
| 5407 Beckner Rd. Trips | 0 | 0 | 0 | 0 | 52 | 0 | 0 | 0 | 0 | 0 | 0 | 0 |
| Subtotal (AM Peak) - Projects Above - | 21 | 91 | 0 | 0 | 84 | 6 | 0 | 0 | 0 | 17 | 0 | 18 |

PM Peak - Other Developments

| | | | | | | | | | | | | |
|---|---|---|---|---|---|---|---|---|---|---|---|---|
| Cielo Apts. Trips | 0 | 11 | 0 | 0 | 12 | 0 | 0 | 0 | 0 | 0 | 0 | 0 |
| Village at Las Soleras Trip | 0 | 0 | 0 | 0 | 0 | 0 | 0 | 0 | 0 | 0 | 0 | 0 |
| Cavan Development Trips | 0 | 6 | 0 | 0 | 12 | 0 | 0 | 0 | 0 | 0 | 0 | 0 |
| 5201 Beckner Rd. Trips | 0 | 27 | 0 | 0 | 46 | 0 | 0 | 0 | 0 | 0 | 0 | 0 |
| Hevenly Santa Fe Trips | 24 | 10 | 0 | 0 | 17 | 19 | 0 | 0 | 0 | 11 | 0 | 27 |
| Presbyterian Medical Offices | 0 | 12 | 0 | 0 | 4 | 0 | 0 | 0 | 0 | 0 | 0 | 0 |
| 5407 Beckner Rd. Trips | 0 | 0 | 0 | 0 | 50 | 0 | 0 | 0 | 0 | 0 | 0 | 0 |
| Subtotal (PM Peak) - Projects Above - | 24 | 66 | 0 | 0 | 141 | 19 | 0 | 0 | 0 | 11 | 0 | 27 |

2025
**NO BUILD**

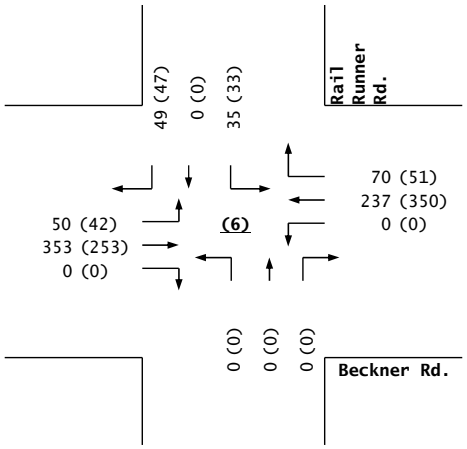


**Trips**

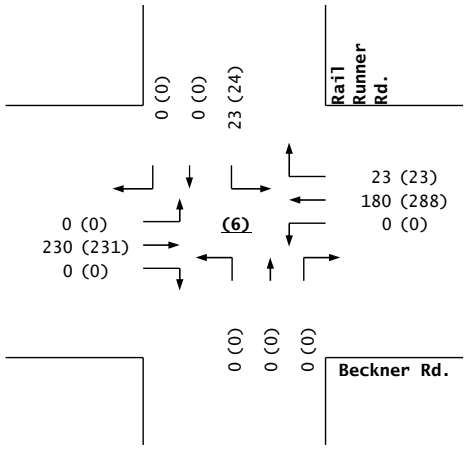


2025
**BUILD**

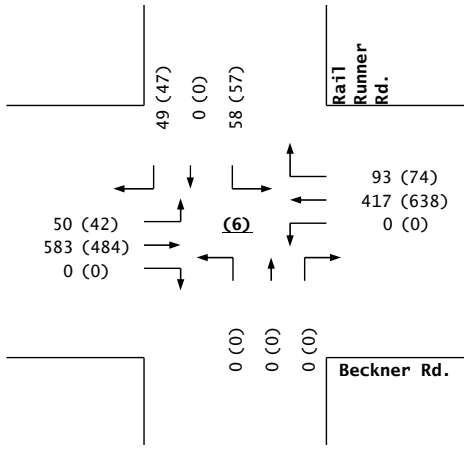


**Beckner Rd. / Rail Runner Rd.**

# *Las Soleras, Tracts 18A & 18B*

Projected Turning Movements Worksheet

***Beckner Rd. / Walking Rain***

**INTERSECTION:** E-W Street: **Beckner Rd.** (7)

N-S Street: **Walking Rain**

Year of Existing Counts 2022

Horizon Year **2025**

| **Growth Rates** | **2.00%** | | | **2.00%** | | | **2.00%** | | | **2.00%** | | |
|---|---|---|---|---|---|---|---|---|---|---|---|---|
| | **Eastbound (Beckner Rd.)** | | | **Westbound (Beckner Rd.)** | | | **Northbound (Walking Rain)** | | | **Southbound (Walking Rain)** | | |
| | Left | Thru | Right | Left | Thru | Right | Left | Thru | Right | Left | Thru | Right |
| Existing Volumes | 18 | 77 | 0 | 0 | 100 | 22 | 0 | 0 | 0 | 44 | 0 | 28 |
| Background Traffic Growth | 1 | 5 | 0 | 0 | 6 | 1 | 0 | 0 | 0 | 3 | 0 | 2 |
| *Subtotal* | 19 | 82 | 0 | 0 | 106 | 23 | 0 | 0 | 0 | 47 | 0 | 30 |
| Medical Office Buiding Trips | 0 | 19 | 140 | 68 | 0 | 0 | 33 | 3 | 8 | 2 | 16 | 0 |
| Vista de la Sierra Trips | 0 | 28 | 0 | 0 | 22 | 0 | 0 | 0 | 0 | 0 | 0 | 0 |
| Other Developments (See Below) | 0 | 108 | 0 | 0 | 90 | 0 | 0 | 0 | 0 | 0 | 0 | 0 |
| ***Subtotal (NO BUILD - A.M.)*** | ***19*** | ***237*** | ***140*** | ***68*** | ***218*** | ***23*** | ***33*** | ***3*** | ***8*** | ***49*** | ***16*** | ***30*** |
| *Percent Residential Trips Generated(Entering)* | *0.00%* | ***77.00%*** | *0.00%* | *0.00%* | *0.00%* | *0.00%* | *0.00%* | *0.00%* | *0.00%* | ***1.00%*** | *0.00%* | *0.00%* |
| *Percent Residential Trips Generated(Exiting)* | *0.00%* | *0.00%* | *0.00%* | *0.00%* | ***77.00%*** | ***1.00%*** | *0.00%* | *0.00%* | *0.00%* | *0.00%* | *0.00%* | *0.00%* |
| *Percent Commercial Trips Generated(Entering)* | *0.00%* | *0.00%* | ***77.00%*** | ***22.00%*** | *0.00%* | *0.00%* | *0.00%* | *0.00%* | *0.00%* | ***1.00%*** | *0.00%* | *0.00%* |
| *Percent Commercial Trips Generated(Exiting)* | *0.00%* | *0.00%* | *0.00%* | *0.00%* | *0.00%* | *0.00%* | ***77.00%*** | ***1.00%*** | ***22.00%*** | *0.00%* | *0.00%* | *0.00%* |
| *Percent Office Trips Generated(Entering)* | *0.00%* | ***34.00%*** | ***50.00%*** | ***15.00%*** | *0.00%* | *0.00%* | *0.00%* | *0.00%* | *0.00%* | *0.00%* | *0.00%* | *0.00%* |
| *Percent Office Trips Generated(Exiting)* | *0.00%* | *0.00%* | *0.00%* | *0.00%* | *0.00%* | *0.00%* | ***84.00%*** | ***1.00%*** | ***10.00%*** | *0.00%* | *0.00%* | *0.00%* |
| Total Trips Generated | 0 | 94 | 160 | 47 | 97 | 1 | 106 | 1 | 24 | 1 | 0 | 0 |
| **Subtotal AM Pk Hr. BUILD Volumes** | **19** | **331** | **300** | **115** | **315** | **24** | **139** | **4** | **32** | **50** | **16** | **30** |
| *Pass-by Trip Adjustments* | *0* | *0* | *0* | *0* | *0* | *0* | *0* | *0* | *0* | *0* | *0* | *0* |
| **Total AM Peak Hour BUILD Volumes** | **19** | **331** | **300** | **115** | **315** | **24** | **139** | **4** | **32** | **50** | **16** | **30** |

| | **Eastbound (Beckner Rd.)** | | | **Westbound (Beckner Rd.)** | | | **Northbound (Walking Rain)** | | | **Southbound (Walking Rain)** | | |
|---|---|---|---|---|---|---|---|---|---|---|---|---|
| | Left | Thru | Right | Left | Thru | Right | Left | Thru | Right | Left | Thru | Right |
| Existing Volumes | 29 | 112 | 0 | 0 | 91 | 35 | 0 | 0 | 0 | 27 | 0 | 17 |
| Background Traffic Growth | 2 | 7 | 0 | 0 | 5 | 2 | 0 | 0 | 0 | 2 | 0 | 1 |
| *Subtotal* | 31 | 119 | 0 | 0 | 96 | 37 | 0 | 0 | 0 | 29 | 0 | 18 |
| Medical Office Buiding Trips | 0 | 11 | 69 | 29 | 0 | 0 | 175 | 21 | 13 | 1 | 8 | 0 |
| Vista de la Sierra Trips | 0 | 17 | 0 | 0 | 12 | 0 | 0 | 0 | 0 | 0 | 0 | 0 |
| Other Developments (See Below) | 0 | 77 | 0 | 0 | 160 | 0 | 0 | 0 | 0 | 0 | 0 | 0 |
| ***Subtotal (NO BUILD - P.M.)*** | ***31*** | ***224*** | ***69*** | ***29*** | ***268*** | ***37*** | ***175*** | ***21*** | ***13*** | ***30*** | ***8*** | ***18*** |
| *Percent Residential Trips Generated(Entering)* | *0.00%* | ***77.00%*** | *0.00%* | *0.00%* | *0.00%* | *0.00%* | *0.00%* | *0.00%* | *0.00%* | ***1.00%*** | *0.00%* | *0.00%* |
| *Percent Residential Trips Generated(Exiting)* | *0.00%* | *0.00%* | *0.00%* | *0.00%* | ***77.00%*** | ***1.00%*** | *0.00%* | *0.00%* | *0.00%* | *0.00%* | *0.00%* | *0.00%* |
| *Percent Commercial Trips Generated(Entering)* | *0.00%* | *0.00%* | ***77.00%*** | ***22.00%*** | *0.00%* | *0.00%* | *0.00%* | *0.00%* | *0.00%* | ***1.00%*** | *0.00%* | *0.00%* |
| *Percent Commercial Trips Generated(Exiting)* | *0.00%* | *0.00%* | *0.00%* | *0.00%* | *0.00%* | *0.00%* | ***77.00%*** | ***1.00%*** | ***22.00%*** | *0.00%* | *0.00%* | *0.00%* |
| *Percent Office Trips Generated(Entering)* | *0.00%* | ***34.00%*** | ***50.00%*** | ***15.00%*** | *0.00%* | *0.00%* | *0.00%* | *0.00%* | *0.00%* | *0.00%* | *0.00%* | *0.00%* |
| *Percent Office Trips Generated(Exiting)* | *0.00%* | *0.00%* | *0.00%* | *0.00%* | *0.00%* | *0.00%* | ***84.00%*** | ***1.00%*** | ***10.00%*** | *0.00%* | *0.00%* | *0.00%* |
| Total Trips Generated | 0 | 169 | 87 | 26 | 81 | 1 | 232 | 2 | 34 | 2 | 0 | 0 |
| **Total PM Peak Hour BUILD Volumes** | **31** | **393** | **156** | **55** | **349** | **38** | **407** | **23** | **47** | **32** | **8** | **18** |

| | Entering | Exiting | | |
|---|---|---|---|---|
| Number of Residential Trips Generated | **126** | **44** | A.M. | 100% Residential Development |
| | **177** | **105** | P.M. | |
| Number of Commercial Trips Generated | **94** | **87** | A.M. | 100% Commercial Development |
| | **49** | **49** | P.M. | |
| Number of Office Trips Generated | **175** | **46** | A.M. | 100% Office Development |
| | **98** | **231** | P.M. | |

| | | | | | | | | | | | | |
|---|---|---|---|---|---|---|---|---|---|---|---|---|
| AM Peak - Other Developments | | | | | | | | | | | | |
| Cielo Apts. Trips | 0 | 14 | 0 | 0 | 5 | 0 | 0 | 0 | 0 | 0 | 0 | 0 |
| Village at Las Soleras Trip | 0 | 0 | 0 | 0 | 0 | 0 | 0 | 0 | 0 | 0 | 0 | 0 |
| Cavan Development Trips | 0 | 9 | 0 | 0 | 3 | 0 | 0 | 0 | 0 | 0 | 0 | 0 |
| 5201 Beckner Rd. Trips | 0 | 49 | 0 | 0 | 15 | 0 | 0 | 0 | 0 | 0 | 0 | 0 |
| Hevenly Santa Fe Trips | 0 | 32 | 0 | 0 | 11 | 0 | 0 | 0 | 0 | 0 | 0 | 0 |
| Presbyterian Medical Offices | 0 | 4 | 0 | 0 | 4 | 0 | 0 | 0 | 0 | 0 | 0 | 0 |
| 5407 Beckner Rd. Trips | 0 | 0 | 0 | 0 | 52 | 0 | 0 | 0 | 0 | 0 | 0 | 0 |
| Subtotal (AM Peak) - Projects Above - | 0 | 108 | 0 | 0 | 90 | 0 | 0 | 0 | 0 | 0 | 0 | 0 |
| PM Peak - Other Developments | | | | | | | | | | | | |
| Cielo Apts. Trips | 0 | 11 | 0 | 0 | 12 | 0 | 0 | 0 | 0 | 0 | 0 | 0 |
| Village at Las Soleras Trip | 0 | 0 | 0 | 0 | 0 | 0 | 0 | 0 | 0 | 0 | 0 | 0 |
| Cavan Development Trips | 0 | 6 | 0 | 0 | 12 | 0 | 0 | 0 | 0 | 0 | 0 | 0 |
| 5201 Beckner Rd. Trips | 0 | 27 | 0 | 0 | 46 | 0 | 0 | 0 | 0 | 0 | 0 | 0 |
| Hevenly Santa Fe Trips | 0 | 21 | 0 | 0 | 36 | 0 | 0 | 0 | 0 | 0 | 0 | 0 |
| Presbyterian Medical Offices | 0 | 12 | 0 | 0 | 4 | 0 | 0 | 0 | 0 | 0 | 0 | 0 |
| 5407 Beckner Rd. Trips | 0 | 0 | 0 | 0 | 50 | 0 | 0 | 0 | 0 | 0 | 0 | 0 |
| Subtotal (PM Peak) - Projects Above - | 0 | 77 | 0 | 0 | 160 | 0 | 0 | 0 | 0 | 0 | 0 | 0 |

2025
**NO BUILD**

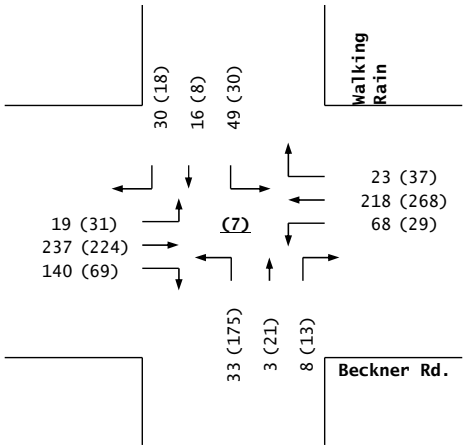


**Trips**

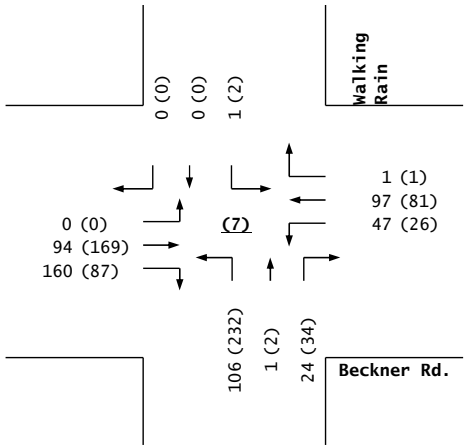


2025
**BUILD**

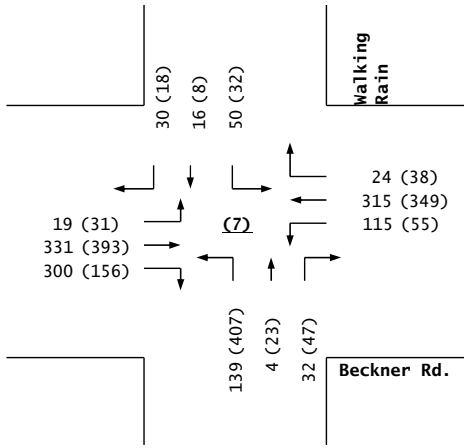


**Beckner Rd. / Walking Rain**

# *Las Soleras, Tracts 18A & 18B*

Projected Turning Movements Worksheet

***Beckner Rd. / Driveway "A"***

**INTERSECTION:** E-W Street: **Beckner Rd.** (8)

N-S Street: **Driveway "A"** **(Right-in, right-out ONLY)**

Year of Existing Counts 2022

Horizon Year **2025**

| **Growth Rates** | **2.00%** | | | **2.00%** | | | **2.00%** | | | **2.00%** | | |
|---|---|---|---|---|---|---|---|---|---|---|---|---|
| | **Eastbound (Beckner Rd.)** | | | **Westbound (Beckner Rd.)** | | | **Northbound (Driveway "A")** | | | **Southbound (Driveway "A")** | | |
| | Left | Thru | Right | Left | Thru | Right | Left | Thru | Right | Left | Thru | Right |
| Existing Volumes | 0 | 121 | 0 | 0 | 122 | 0 | 0 | 0 | 0 | 0 | 0 | 0 |
| Background Traffic Growth | 0 | 7 | 0 | 0 | 7 | 0 | 0 | 0 | 0 | 0 | 0 | 0 |
| *Subtotal* | 0 | 128 | 0 | 0 | 129 | 0 | 0 | 0 | 0 | 0 | 0 | 0 |
| Medical Office Buiding Trips | 0 | 8 | 21 | 0 | 68 | 0 | 0 | 0 | 19 | 0 | 0 | 0 |
| Vista de la Sierra Trips | 0 | 28 | 0 | 0 | 22 | 0 | 0 | 0 | 0 | 0 | 0 | 0 |
| Other Developments (See Below) | 0 | 108 | 0 | 0 | 90 | 0 | 0 | 0 | 0 | 0 | 0 | 0 |
| ***Subtotal (NO BUILD - A.M.)*** | ***0*** | ***272*** | ***21*** | ***0*** | ***309*** | ***0*** | ***0*** | ***0*** | ***19*** | ***0*** | ***0*** | ***0*** |
| *Percent Residential Trips Generated(Entering)* | *0.00%* | ***78.00%*** | *0.00%* | *0.00%* | *0.00%* | *0.00%* | *0.00%* | *0.00%* | *0.00%* | *0.00%* | *0.00%* | *0.00%* |
| *Percent Residential Trips Generated(Exiting)* | *0.00%* | *0.00%* | *0.00%* | *0.00%* | ***78.00%*** | *0.00%* | *0.00%* | *0.00%* | *0.00%* | *0.00%* | *0.00%* | *0.00%* |
| *Percent Commercial Trips Generated(Entering)* | *0.00%* | *0.00%* | *0.00%* | *0.00%* | ***22.00%*** | *0.00%* | *0.00%* | *0.00%* | *0.00%* | *0.00%* | *0.00%* | *0.00%* |
| *Percent Commercial Trips Generated(Exiting)* | *0.00%* | *0.00%* | *0.00%* | *0.00%* | *0.00%* | *0.00%* | *0.00%* | *0.00%* | *0.00%* | *0.00%* | *0.00%* | *0.00%* |
| *Percent Office Trips Generated(Entering)* | *0.00%* | *0.00%* | ***35.00%*** | *0.00%* | ***15.00%*** | *0.00%* | *0.00%* | *0.00%* | *0.00%* | *0.00%* | *0.00%* | *0.00%* |
| *Percent Office Trips Generated(Exiting)* | *0.00%* | ***10.00%*** | *0.00%* | *0.00%* | *0.00%* | *0.00%* | *0.00%* | *0.00%* | ***5.00%*** | *0.00%* | *0.00%* | *0.00%* |
| Total Trips Generated | 0 | 39 | 61 | 0 | 145 | 0 | 0 | 0 | 2 | 0 | 0 | 0 |
| **Subtotal AM Pk Hr. BUILD Volumes** | **0** | **311** | **82** | **0** | **454** | **0** | **0** | **0** | **21** | **0** | **0** | **0** |
| *Pass-by Trip Adjustments* | *0* | *0* | *0* | *0* | *0* | *0* | *0* | *0* | *0* | *0* | *0* | *0* |
| **Total AM Peak Hour BUILD Volumes** | **0** | **311** | **82** | **0** | **454** | **0** | **0** | **0** | **21** | **0** | **0** | **0** |

| | **Eastbound (Beckner Rd.)** | | | **Westbound (Beckner Rd.)** | | | **Northbound (Driveway "A")** | | | **Southbound (Driveway "A")** | | |
|---|---|---|---|---|---|---|---|---|---|---|---|---|
| | Left | Thru | Right | Left | Thru | Right | Left | Thru | Right | Left | Thru | Right |
| Existing Volumes | 0 | 139 | 0 | 0 | 126 | 0 | 0 | 0 | 0 | 0 | 0 | 0 |
| Background Traffic Growth | 0 | 8 | 0 | 0 | 8 | 0 | 0 | 0 | 0 | 0 | 0 | 0 |
| *Subtotal* | 0 | 147 | 0 | 0 | 134 | 0 | 0 | 0 | 0 | 0 | 0 | 0 |
| Medical Office Buiding Trips | 0 | 13 | 12 | 0 | 29 | 0 | 0 | 0 | 52 | 0 | 0 | 0 |
| Vista de la Sierra Trips | 0 | 17 | 0 | 0 | 12 | 0 | 0 | 0 | 0 | 0 | 0 | 0 |
| Other Developments (See Below) | 0 | 77 | 0 | 0 | 160 | 0 | 0 | 0 | 0 | 0 | 0 | 0 |
| ***Subtotal (NO BUILD - P.M.)*** | ***0*** | ***254*** | ***12*** | ***0*** | ***335*** | ***0*** | ***0*** | ***0*** | ***52*** | ***0*** | ***0*** | ***0*** |
| *Percent Residential Trips Generated(Entering)* | *0.00%* | ***78.00%*** | *0.00%* | *0.00%* | *0.00%* | *0.00%* | *0.00%* | *0.00%* | *0.00%* | *0.00%* | *0.00%* | *0.00%* |
| *Percent Residential Trips Generated(Exiting)* | *0.00%* | *0.00%* | *0.00%* | *0.00%* | ***78.00%*** | *0.00%* | *0.00%* | *0.00%* | *0.00%* | *0.00%* | *0.00%* | *0.00%* |
| *Percent Commercial Trips Generated(Entering)* | *0.00%* | *0.00%* | *0.00%* | *0.00%* | ***22.00%*** | *0.00%* | *0.00%* | *0.00%* | *0.00%* | *0.00%* | *0.00%* | *0.00%* |
| *Percent Commercial Trips Generated(Exiting)* | *0.00%* | *0.00%* | *0.00%* | *0.00%* | *0.00%* | *0.00%* | *0.00%* | *0.00%* | *0.00%* | *0.00%* | *0.00%* | *0.00%* |
| *Percent Office Trips Generated(Entering)* | *0.00%* | *0.00%* | ***35.00%*** | *0.00%* | ***15.00%*** | *0.00%* | *0.00%* | *0.00%* | *0.00%* | *0.00%* | *0.00%* | *0.00%* |
| *Percent Office Trips Generated(Exiting)* | *0.00%* | ***10.00%*** | *0.00%* | *0.00%* | *0.00%* | *0.00%* | *0.00%* | *0.00%* | ***5.00%*** | *0.00%* | *0.00%* | *0.00%* |
| Total Trips Generated | 0 | 161 | 34 | 0 | 108 | 0 | 0 | 0 | 12 | 0 | 0 | 0 |
| **Total PM Peak Hour BUILD Volumes** | **0** | **415** | **46** | **0** | **443** | **0** | **0** | **0** | **64** | **0** | **0** | **0** |

| | Entering | Exiting | | |
|---|---|---|---|---|
| Number of Residential Trips Generated | **126** | **44** | A.M. | |
| | **177** | **105** | P.M. | |
| Number of Commercial Trips Generated | **94** | **87** | A.M. | 100% Commercial Development |
| | **49** | **49** | P.M. | |
| Number of Office Trips Generated | **175** | **46** | A.M. | 100% Office Development |
| | **98** | **231** | P.M. | |

| | | | | | | | | | | | | |
|---|---|---|---|---|---|---|---|---|---|---|---|---|
| AM Peak - Other Developments | | | | | | | | | | | | |
| Cielo Apts. Trips | 0 | 14 | 0 | 0 | 5 | 0 | 0 | 0 | 0 | 0 | 0 | 0 |
| Village at Las Soleras Trip | 0 | 0 | 0 | 0 | 0 | 0 | 0 | 0 | 0 | 0 | 0 | 0 |
| Cavan Development Trips | 0 | 9 | 0 | 0 | 3 | 0 | 0 | 0 | 0 | 0 | 0 | 0 |
| 5201 Beckner Rd. Trips | 0 | 49 | 0 | 0 | 15 | 0 | 0 | 0 | 0 | 0 | 0 | 0 |
| Hevenly Santa Fe Trips | 0 | 32 | 0 | 0 | 11 | 0 | 0 | 0 | 0 | 0 | 0 | 0 |
| Presbyterian Medical Offices | 0 | 4 | 0 | 0 | 4 | 0 | 0 | 0 | 0 | 0 | 0 | 0 |
| 5407 Beckner Rd. Trips | 0 | 0 | 0 | 0 | 52 | 0 | 0 | 0 | 0 | 0 | 0 | 0 |
| Subtotal (AM Peak) - Projects Above - | 0 | 108 | 0 | 0 | 90 | 0 | 0 | 0 | 0 | 0 | 0 | 0 |
| PM Peak - Other Developments | | | | | | | | | | | | |
| Cielo Apts. Trips | 0 | 11 | 0 | 0 | 12 | 0 | 0 | 0 | 0 | 0 | 0 | 0 |
| Village at Las Soleras Trip | 0 | 0 | 0 | 0 | 0 | 0 | 0 | 0 | 0 | 0 | 0 | 0 |
| Cavan Development Trips | 0 | 6 | 0 | 0 | 12 | 0 | 0 | 0 | 0 | 0 | 0 | 0 |
| 5201 Beckner Rd. Trips | 0 | 27 | 0 | 0 | 46 | 0 | 0 | 0 | 0 | 0 | 0 | 0 |
| Hevenly Santa Fe Trips | 0 | 21 | 0 | 0 | 36 | 0 | 0 | 0 | 0 | 0 | 0 | 0 |
| Presbyterian Medical Offices | 0 | 12 | 0 | 0 | 4 | 0 | 0 | 0 | 0 | 0 | 0 | 0 |
| 5407 Beckner Rd. Trips | 0 | 0 | 0 | 0 | 50 | 0 | 0 | 0 | 0 | 0 | 0 | 0 |
| Subtotal (PM Peak) - Projects Above - | 0 | 77 | 0 | 0 | 160 | 0 | 0 | 0 | 0 | 0 | 0 | 0 |

2025
**NO BUILD**

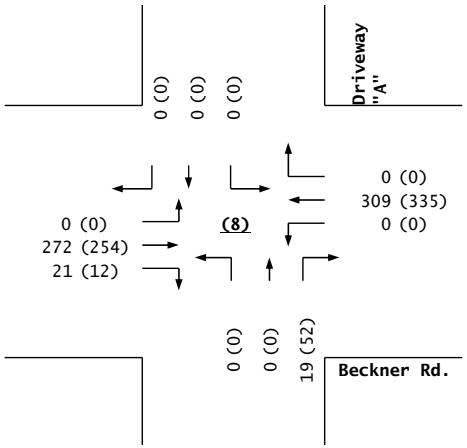


**Trips**

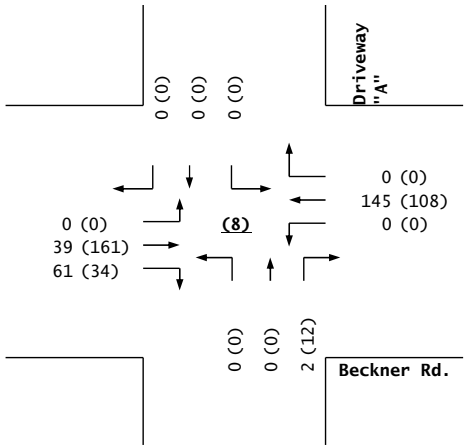


2025
**BUILD**

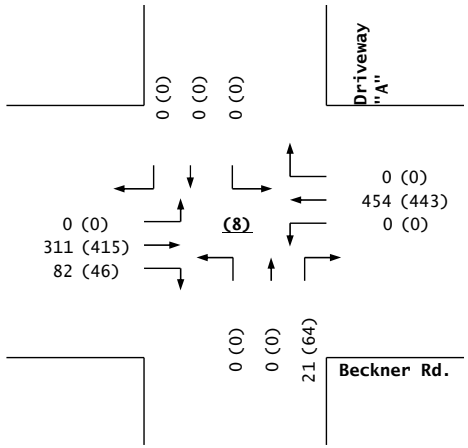


**Beckner Rd. / Driveway "A"**

# *Las Soleras, Tracts 18A & 18B*

Projected Turning Movements Worksheet

***Beckner Rd. / Driveway "B"***

**INTERSECTION:** E-W Street: **Beckner Rd.** (9)

N-S Street: **Driveway "B"**

Year of Existing Counts 2022

Horizon Year **2025**

| **Growth Rates** | **2.00%** | | | **2.00%** | | | **2.00%** | | | **2.00%** | | |
|---|---|---|---|---|---|---|---|---|---|---|---|---|
| | **Eastbound (Beckner Rd.)** | | | **Westbound (Beckner Rd.)** | | | **Northbound (Driveway "B")** | | | **Southbound (Driveway "B")** | | |
| | Left | Thru | Right | Left | Thru | Right | Left | Thru | Right | Left | Thru | Right |
| Existing Volumes | 0 | 0 | 0 | 0 | 0 | 0 | 0 | 0 | 0 | 0 | 0 | 0 |
| Background Traffic Growth | 0 | 0 | 0 | 0 | 0 | 0 | 0 | 0 | 0 | 0 | 0 | 0 |
| *Subtotal* | 0 | 0 | 0 | 0 | 0 | 0 | 0 | 0 | 0 | 0 | 0 | 0 |
| Medical Office Buiding Trips | 0 | 0 | 0 | 0 | 0 | 0 | 0 | 0 | 0 | 0 | 0 | 0 |
| Vista de la Sierra Trips | 0 | 0 | 0 | 0 | 0 | 0 | 0 | 0 | 0 | 0 | 0 | 0 |
| Other Developments (See Below) | 0 | 0 | 0 | 0 | 0 | 0 | 0 | 0 | 0 | 0 | 0 | 0 |
| ***Subtotal (NO BUILD - A.M.)*** | ***0*** | **291** | ***0*** | ***0*** | **309** | ***0*** | ***0*** | ***0*** | ***0*** | ***0*** | ***0*** | ***0*** |
| *Percent Residential Trips Generated(Entering)* | *0.00%* | ***52.00%*** | ***26.00%*** | ***7.00%*** | *0.00%* | *0.00%* | *0.00%* | *0.00%* | *0.00%* | *0.00%* | *0.00%* | *0.00%* |
| *Percent Residential Trips Generated(Exiting)* | *0.00%* | *0.00%* | *0.00%* | ***33.00%*** | *0.00%* | *0.00%* | ***26.00%*** | *0.00%* | ***7.00%*** | *0.00%* | *0.00%* | *0.00%* |
| *Percent Commercial Trips Generated(Entering)* | *0.00%* | *0.00%* | *0.00%* | *0.00%* | ***22.00%*** | *0.00%* | *0.00%* | *0.00%* | *0.00%* | *0.00%* | *0.00%* | *0.00%* |
| *Percent Commercial Trips Generated(Exiting)* | *0.00%* | ***22.00%*** | *0.00%* | *0.00%* | *0.00%* | *0.00%* | *0.00%* | *0.00%* | *0.00%* | *0.00%* | *0.00%* | *0.00%* |
| *Percent Office Trips Generated(Entering)* | *0.00%* | *0.00%* | *0.00%* | *0.00%* | ***15.00%*** | *0.00%* | *0.00%* | *0.00%* | *0.00%* | *0.00%* | *0.00%* | *0.00%* |
| *Percent Office Trips Generated(Exiting)* | *0.00%* | ***15.00%*** | *0.00%* | *0.00%* | *0.00%* | *0.00%* | *0.00%* | *0.00%* | *0.00%* | *0.00%* | *0.00%* | *0.00%* |
| Total Trips Generated | 0 | 49 | 11 | 45 | 47 | 0 | 33 | 0 | 9 | 0 | 0 | 0 |
| **Total AM Peak Hour BUILD Volumes** | **0** | **340** | **11** | **45** | **356** | **0** | **33** | **0** | **9** | **0** | **0** | **0** |

| | **Eastbound (Beckner Rd.)** | | | **Westbound (Beckner Rd.)** | | | **Northbound (Driveway "B")** | | | **Southbound (Driveway "B")** | | |
|---|---|---|---|---|---|---|---|---|---|---|---|---|
| | Left | Thru | Right | Left | Thru | Right | Left | Thru | Right | Left | Thru | Right |
| Existing Volumes | 0 | 0 | 0 | 0 | 0 | 0 | 0 | 0 | 0 | 0 | 0 | 0 |
| Background Traffic Growth | 0 | 0 | 0 | 0 | 0 | 0 | 0 | 0 | 0 | 0 | 0 | 0 |
| *Subtotal* | 0 | 0 | 0 | 0 | 0 | 0 | 0 | 0 | 0 | 0 | 0 | 0 |
| Medical Office Buiding Trips | 0 | 0 | 0 | 0 | 0 | 0 | 0 | 0 | 0 | 0 | 0 | 0 |
| Vista de la Sierra Trips | 0 | 0 | 0 | 0 | 0 | 0 | 0 | 0 | 0 | 0 | 0 | 0 |
| Other Developments (See Below) | 0 | 0 | 0 | 0 | 0 | 0 | 0 | 0 | 0 | 0 | 0 | 0 |
| ***Subtotal (NO BUILD - P.M.)*** | ***0*** | **306** | ***0*** | ***0*** | **335** | ***0*** | ***0*** | ***0*** | ***0*** | ***0*** | ***0*** | ***0*** |
| *Percent Residential Trips Generated(Entering)* | *0.00%* | ***52.00%*** | ***26.00%*** | ***7.00%*** | *0.00%* | *0.00%* | *0.00%* | *0.00%* | *0.00%* | *0.00%* | *0.00%* | *0.00%* |
| *Percent Residential Trips Generated(Exiting)* | *0.00%* | *0.00%* | *0.00%* | ***33.00%*** | *0.00%* | *0.00%* | ***26.00%*** | *0.00%* | ***7.00%*** | *0.00%* | *0.00%* | *0.00%* |
| *Percent Commercial Trips Generated(Entering)* | *0.00%* | *0.00%* | *0.00%* | *0.00%* | ***22.00%*** | *0.00%* | *0.00%* | *0.00%* | *0.00%* | *0.00%* | *0.00%* | *0.00%* |
| *Percent Commercial Trips Generated(Exiting)* | *0.00%* | ***22.00%*** | *0.00%* | *0.00%* | *0.00%* | *0.00%* | *0.00%* | *0.00%* | *0.00%* | *0.00%* | *0.00%* | *0.00%* |
| *Percent Office Trips Generated(Entering)* | *0.00%* | *0.00%* | *0.00%* | *0.00%* | ***15.00%*** | *0.00%* | *0.00%* | *0.00%* | *0.00%* | *0.00%* | *0.00%* | *0.00%* |
| *Percent Office Trips Generated(Exiting)* | *0.00%* | ***15.00%*** | *0.00%* | *0.00%* | *0.00%* | *0.00%* | *0.00%* | *0.00%* | *0.00%* | *0.00%* | *0.00%* | *0.00%* |
| Total Trips Generated | 0 | 138 | 46 | 47 | 26 | 0 | 27 | 0 | 7 | 0 | 0 | 0 |
| **Total PM Peak Hour BUILD Volumes** | **0** | **444** | **46** | **47** | **361** | **0** | **27** | **0** | **7** | **0** | **0** | **0** |

| | Entering | Exiting | | |
|---|---|---|---|---|
| Number of Residential Trips Generated | **126** | **44** | A.M. | 100% Residential Development |
| | **177** | **105** | P.M. | |
| Number of Commercial Trips Generated | **94** | **87** | A.M. | 100% Commercial Development |
| | **49** | **49** | P.M. | |
| Number of Office Trips Generated | **175** | **46** | A.M. | 100% Office Development |
| | **98** | **231** | P.M. | |

| AM Peak - Other Developments | | | | | | | | | | | | |
|---|---|---|---|---|---|---|---|---|---|---|---|---|
| Cielo Apts. Trips | 0 | 0 | 0 | 0 | 0 | 0 | 0 | 0 | 0 | 0 | 0 | 0 |
| Village at Las Soleras Trip | 0 | 0 | 0 | 0 | 0 | 0 | 0 | 0 | 0 | 0 | 0 | 0 |
| Cavan Development Trips | 0 | 0 | 0 | 0 | 0 | 0 | 0 | 0 | 0 | 0 | 0 | 0 |
| 5201 Beckner Rd. Trips | 0 | 0 | 0 | 0 | 0 | 0 | 0 | 0 | 0 | 0 | 0 | 0 |
| Hevenly Santa Fe Trips | 0 | 0 | 0 | 0 | 0 | 0 | 0 | 0 | 0 | 0 | 0 | 0 |
| 5407 Beckner Rd. Trips | 0 | 0 | 0 | 0 | 0 | 0 | 0 | 0 | 0 | 0 | 0 | 0 |
| Subtotal (AM Peak) - Projects Above - | 0 | 0 | 0 | 0 | 0 | 0 | 0 | 0 | 0 | 0 | 0 | 0 |

| PM Peak - Other Developments | | | | | | | | | | | | |
|---|---|---|---|---|---|---|---|---|---|---|---|---|
| Cielo Apts. Trips | 0 | 0 | 0 | 0 | 0 | 0 | 0 | 0 | 0 | 0 | 0 | 0 |
| Village at Las Soleras Trip | 0 | 0 | 0 | 0 | 0 | 0 | 0 | 0 | 0 | 0 | 0 | 0 |
| Cavan Development Trips | 0 | 0 | 0 | 0 | 0 | 0 | 0 | 0 | 0 | 0 | 0 | 0 |
| 5201 Beckner Rd. Trips | 0 | 0 | 0 | 0 | 0 | 0 | 0 | 0 | 0 | 0 | 0 | 0 |
| Hevenly Santa Fe Trips | 0 | 0 | 0 | 0 | 0 | 0 | 0 | 0 | 0 | 0 | 0 | 0 |
| 5407 Beckner Rd. Trips | 0 | 0 | 0 | 0 | 0 | 0 | 0 | 0 | 0 | 0 | 0 | 0 |
| Subtotal (PM Peak) - Projects Above - | 0 | 0 | 0 | 0 | 0 | 0 | 0 | 0 | 0 | 0 | 0 | 0 |

2025
**NO BUILD**

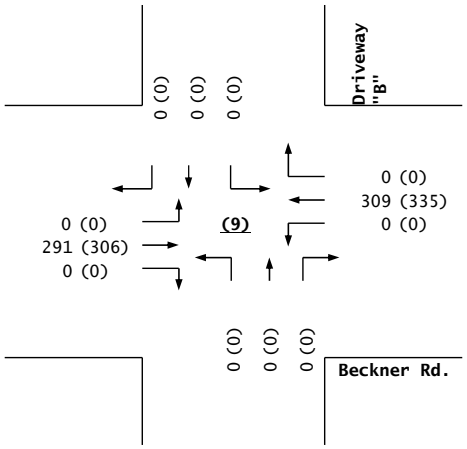


**Trips**

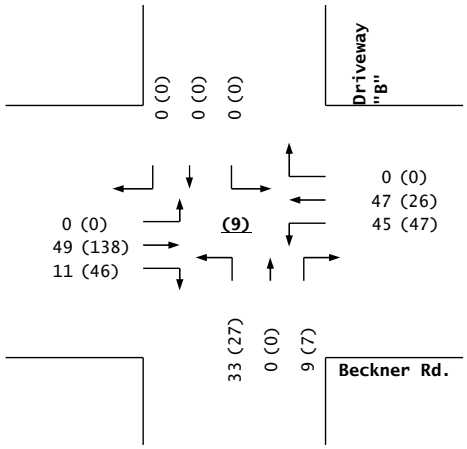


2025
**BUILD**

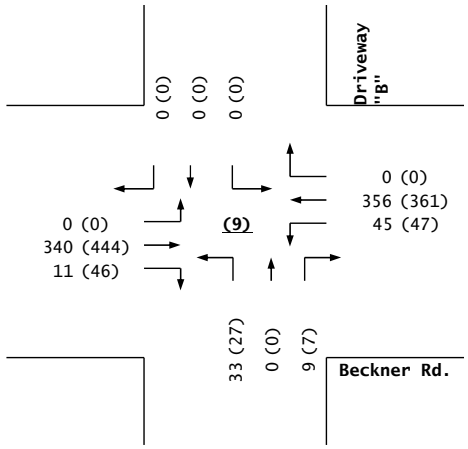


**Beckner Rd. / Driveway "B"**

# *Las Soleras, Tracts 18A & 18B*

Projected Turning Movements Worksheet

***Beckner Rd. / Driveway "C"***

**INTERSECTION:** E-W Street: **Beckner Rd.** (10)

N-S Street: **Driveway "C"**

Year of Existing Counts 2022

Horizon Year **2025**

**Growth Rates** 2.00% 2.00% 2.00% 2.00%

| | Eastbound (Beckner Rd.) | | | Westbound (Beckner Rd.) | | | Northbound (Driveway "C") | | | Southbound (Driveway "C") | | |
|---|---|---|---|---|---|---|---|---|---|---|---|---|
| | Left | Thru | Right | Left | Thru | Right | Left | Thru | Right | Left | Thru | Right |
| Existing Volumes | 0 | 0 | 0 | 0 | 0 | 0 | 0 | 0 | 0 | 0 | 0 | 0 |
| Background Traffic Growth | 0 | 0 | 0 | 0 | 0 | 0 | 0 | 0 | 0 | 0 | 0 | 0 |
| *Subtotal* | 0 | 0 | 0 | 0 | 0 | 0 | 0 | 0 | 0 | 0 | 0 | 0 |
| Medical Office Buiding Trips | 0 | 0 | 0 | 0 | 0 | 0 | 0 | 0 | 0 | 0 | 0 | 0 |
| Vista de la Sierra Trips | 0 | 0 | 0 | 0 | 0 | 0 | 0 | 0 | 0 | 0 | 0 | 0 |
| Other Developments (See Below) | 0 | 0 | 0 | 0 | 0 | 0 | 0 | 0 | 0 | 0 | 0 | 0 |
| ***Subtotal (NO BUILD - A.M.)*** | ***0*** | ***291*** | ***0*** | ***0*** | ***309*** | ***0*** | ***0*** | ***0*** | ***0*** | ***0*** | ***0*** | ***0*** |
| *Percent Residential Trips Generated(Entering)* | *0.00%* | ***26.00%*** | ***26.00%*** | ***7.00%*** | ***7.00%*** | *0.00%* | *0.00%* | *0.00%* | *0.00%* | *0.00%* | *0.00%* | *0.00%* |
| *Percent Residential Trips Generated(Exiting)* | *0.00%* | *0.00%* | *0.00%* | ***33.00%*** | *0.00%* | *0.00%* | ***26.00%*** | *0.00%* | ***7.00%*** | *0.00%* | *0.00%* | *0.00%* |
| *Percent Commercial Trips Generated(Entering)* | *0.00%* | *0.00%* | *0.00%* | *0.00%* | ***22.00%*** | *0.00%* | *0.00%* | *0.00%* | *0.00%* | *0.00%* | *0.00%* | *0.00%* |
| *Percent Commercial Trips Generated(Exiting)* | *0.00%* | ***22.00%*** | *0.00%* | *0.00%* | *0.00%* | *0.00%* | *0.00%* | *0.00%* | *0.00%* | *0.00%* | *0.00%* | *0.00%* |
| *Percent Office Trips Generated(Entering)* | *0.00%* | *0.00%* | *0.00%* | *0.00%* | ***15.00%*** | *0.00%* | *0.00%* | *0.00%* | *0.00%* | *0.00%* | *0.00%* | *0.00%* |
| *Percent Office Trips Generated(Exiting)* | *0.00%* | ***15.00%*** | *0.00%* | *0.00%* | *0.00%* | *0.00%* | *0.00%* | *0.00%* | *0.00%* | *0.00%* | *0.00%* | *0.00%* |
| Total Trips Generated | 0 | 37 | 11 | 45 | 50 | 0 | 33 | 0 | 9 | 0 | 0 | 0 |
| **Total AM Peak Hour BUILD Volumes** | **0** | **328** | **11** | **45** | **359** | **0** | **33** | **0** | **9** | **0** | **0** | **0** |

| | Eastbound (Beckner Rd.) | | | Westbound (Beckner Rd.) | | | Northbound (Driveway "C") | | | Southbound (Driveway "C") | | |
|---|---|---|---|---|---|---|---|---|---|---|---|---|
| | Left | Thru | Right | Left | Thru | Right | Left | Thru | Right | Left | Thru | Right |
| Existing Volumes | 0 | 0 | 0 | 0 | 0 | 0 | 0 | 0 | 0 | 0 | 0 | 0 |
| Background Traffic Growth | 0 | 0 | 0 | 0 | 0 | 0 | 0 | 0 | 0 | 0 | 0 | 0 |
| *Subtotal* | 0 | 0 | 0 | 0 | 0 | 0 | 0 | 0 | 0 | 0 | 0 | 0 |
| Medical Office Buiding Trips | 0 | 0 | 0 | 0 | 0 | 0 | 0 | 0 | 0 | 0 | 0 | 0 |
| Vista de la Sierra Trips | 0 | 0 | 0 | 0 | 0 | 0 | 0 | 0 | 0 | 0 | 0 | 0 |
| Other Developments (See Below) | 0 | 0 | 0 | 0 | 0 | 0 | 0 | 0 | 0 | 0 | 0 | 0 |
| ***Subtotal (NO BUILD - P.M.)*** | ***0*** | ***306*** | ***0*** | ***0*** | ***335*** | ***0*** | ***0*** | ***0*** | ***0*** | ***0*** | ***0*** | ***0*** |
| *Percent Residential Trips Generated(Entering)* | *0.00%* | ***26.00%*** | ***26.00%*** | ***7.00%*** | ***7.00%*** | *0.00%* | *0.00%* | *0.00%* | *0.00%* | *0.00%* | *0.00%* | *0.00%* |
| *Percent Residential Trips Generated(Exiting)* | *0.00%* | *0.00%* | *0.00%* | ***33.00%*** | *0.00%* | *0.00%* | ***26.00%*** | *0.00%* | ***7.00%*** | *0.00%* | *0.00%* | *0.00%* |
| *Percent Commercial Trips Generated(Entering)* | *0.00%* | *0.00%* | *0.00%* | *0.00%* | ***22.00%*** | *0.00%* | *0.00%* | *0.00%* | *0.00%* | *0.00%* | *0.00%* | *0.00%* |
| *Percent Commercial Trips Generated(Exiting)* | *0.00%* | ***22.00%*** | *0.00%* | *0.00%* | *0.00%* | *0.00%* | *0.00%* | *0.00%* | *0.00%* | *0.00%* | *0.00%* | *0.00%* |
| *Percent Office Trips Generated(Entering)* | *0.00%* | *0.00%* | *0.00%* | *0.00%* | ***15.00%*** | *0.00%* | *0.00%* | *0.00%* | *0.00%* | *0.00%* | *0.00%* | *0.00%* |
| *Percent Office Trips Generated(Exiting)* | *0.00%* | ***15.00%*** | *0.00%* | *0.00%* | *0.00%* | *0.00%* | *0.00%* | *0.00%* | *0.00%* | *0.00%* | *0.00%* | *0.00%* |
| Total Trips Generated | 0 | 92 | 46 | 47 | 38 | 0 | 27 | 0 | 7 | 0 | 0 | 0 |
| **Total PM Peak Hour BUILD Volumes** | **0** | **398** | **46** | **47** | **373** | **0** | **27** | **0** | **7** | **0** | **0** | **0** |

| | Entering | Exiting | | |
|---|---|---|---|---|
| Number of Residential Trips Generated | **126** | **44** | A.M. | |
| | **177** | **105** | P.M. | |
| Number of Commercial Trips Generated | **94** | **87** | A.M. | 100% Commercial Development |
| | **49** | **49** | P.M. | |
| Number of Office Trips Generated | **175** | **46** | A.M. | 100% Office Development |
| | **98** | **231** | P.M. | |

2025
**NO BUILD**

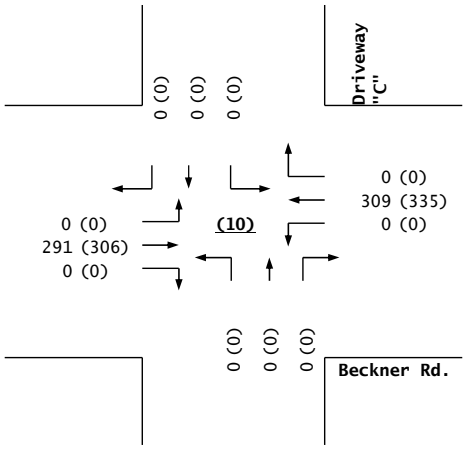


**Trips**

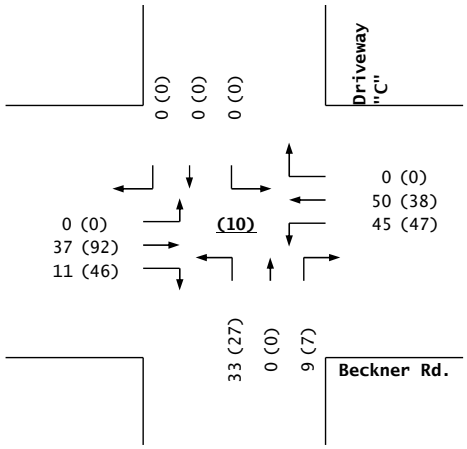


2025
**BUILD**

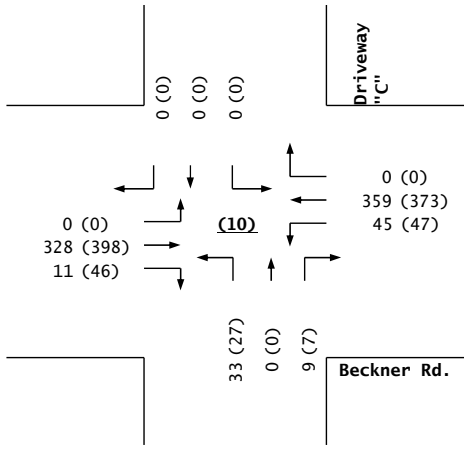


**Beckner Rd. / Driveway "C"**

# *Las Soleras, Tracts 18A & 18B*

Projected Turning Movements Worksheet

***Beckner Rd. / Driveway "D"***

**INTERSECTION:** E-W Street: **Beckner Rd.** (11)

N-S Street: **Driveway "D"**

Year of Existing Counts 2022

Horizon Year **2025**

**Growth Rates** 2.00% 2.00% 2.00% 2.00%

| | Eastbound (Beckner Rd.) | | | Westbound (Beckner Rd.) | | | Northbound (Driveway "D") | | | Southbound (Driveway "D") | | |
|---|---|---|---|---|---|---|---|---|---|---|---|---|
| | Left | Thru | Right | Left | Thru | Right | Left | Thru | Right | Left | Thru | Right |
| Existing Volumes | 0 | 0 | 0 | 0 | 0 | 0 | 0 | 0 | 0 | 0 | 0 | 0 |
| Background Traffic Growth | 0 | 0 | 0 | 0 | 0 | 0 | 0 | 0 | 0 | 0 | 0 | 0 |
| *Subtotal* | 0 | 0 | 0 | 0 | 0 | 0 | 0 | 0 | 0 | 0 | 0 | 0 |
| Medical Office Buiding Trips | 0 | 0 | 0 | 0 | 0 | 0 | 0 | 0 | 0 | 0 | 0 | 0 |
| Vista de la Sierra Trips | 0 | 0 | 0 | 0 | 0 | 0 | 0 | 0 | 0 | 0 | 0 | 0 |
| Other Developments (See Below) | 0 | 0 | 0 | 0 | 0 | 0 | 0 | 0 | 0 | 0 | 0 | 0 |
| ***Subtotal (NO BUILD - A.M.)*** | ***0*** | ***291*** | ***0*** | ***0*** | ***309*** | ***0*** | ***0*** | ***0*** | ***0*** | ***0*** | ***0*** | ***0*** |
| *Percent Residential Trips Generated(Entering)* | *0.00%* | *0.00%* | ***26.00%*** | ***8.00%*** | ***14.00%*** | *0.00%* | *0.00%* | *0.00%* | *0.00%* | *0.00%* | *0.00%* | *0.00%* |
| *Percent Residential Trips Generated(Exiting)* | *0.00%* | *0.00%* | *0.00%* | ***33.00%*** | *0.00%* | *0.00%* | ***26.00%*** | *0.00%* | ***7.00%*** | *0.00%* | *0.00%* | *0.00%* |
| *Percent Commercial Trips Generated(Entering)* | *0.00%* | *0.00%* | *0.00%* | *0.00%* | ***22.00%*** | *0.00%* | *0.00%* | *0.00%* | *0.00%* | *0.00%* | *0.00%* | *0.00%* |
| *Percent Commercial Trips Generated(Exiting)* | *0.00%* | ***22.00%*** | *0.00%* | *0.00%* | *0.00%* | *0.00%* | *0.00%* | *0.00%* | *0.00%* | *0.00%* | *0.00%* | *0.00%* |
| *Percent Office Trips Generated(Entering)* | *0.00%* | *0.00%* | *0.00%* | *0.00%* | ***15.00%*** | *0.00%* | *0.00%* | *0.00%* | *0.00%* | *0.00%* | *0.00%* | *0.00%* |
| *Percent Office Trips Generated(Exiting)* | *0.00%* | ***15.00%*** | *0.00%* | *0.00%* | *0.00%* | *0.00%* | *0.00%* | *0.00%* | *0.00%* | *0.00%* | *0.00%* | *0.00%* |
| Total Trips Generated | 0 | 26 | 11 | 46 | 53 | 0 | 33 | 0 | 9 | 0 | 0 | 0 |
| **Total AM Peak Hour BUILD Volumes** | **0** | **317** | **11** | **46** | **362** | **0** | **33** | **0** | **9** | **0** | **0** | **0** |

| | Eastbound (Beckner Rd.) | | | Westbound (Beckner Rd.) | | | Northbound (Driveway "D") | | | Southbound (Driveway "D") | | |
|---|---|---|---|---|---|---|---|---|---|---|---|---|
| | Left | Thru | Right | Left | Thru | Right | Left | Thru | Right | Left | Thru | Right |
| Existing Volumes | 0 | 0 | 0 | 0 | 0 | 0 | 0 | 0 | 0 | 0 | 0 | 0 |
| Background Traffic Growth | 0 | 0 | 0 | 0 | 0 | 0 | 0 | 0 | 0 | 0 | 0 | 0 |
| *Subtotal* | 0 | 0 | 0 | 0 | 0 | 0 | 0 | 0 | 0 | 0 | 0 | 0 |
| Medical Office Buiding Trips | 0 | 0 | 0 | 0 | 0 | 0 | 0 | 0 | 0 | 0 | 0 | 0 |
| Vista de la Sierra Trips | 0 | 0 | 0 | 0 | 0 | 0 | 0 | 0 | 0 | 0 | 0 | 0 |
| Other Developments (See Below) | 0 | 0 | 0 | 0 | 0 | 0 | 0 | 0 | 0 | 0 | 0 | 0 |
| ***Subtotal (NO BUILD - P.M.)*** | ***0*** | ***306*** | ***0*** | ***0*** | ***335*** | ***0*** | ***0*** | ***0*** | ***0*** | ***0*** | ***0*** | ***0*** |
| *Percent Residential Trips Generated(Entering)* | *0.00%* | *0.00%* | ***26.00%*** | ***8.00%*** | ***14.00%*** | *0.00%* | *0.00%* | *0.00%* | *0.00%* | *0.00%* | *0.00%* | *0.00%* |
| *Percent Residential Trips Generated(Exiting)* | *0.00%* | *0.00%* | *0.00%* | ***33.00%*** | *0.00%* | *0.00%* | ***26.00%*** | *0.00%* | ***7.00%*** | *0.00%* | *0.00%* | *0.00%* |
| *Percent Commercial Trips Generated(Entering)* | *0.00%* | *0.00%* | *0.00%* | *0.00%* | ***22.00%*** | *0.00%* | *0.00%* | *0.00%* | *0.00%* | *0.00%* | *0.00%* | *0.00%* |
| *Percent Commercial Trips Generated(Exiting)* | *0.00%* | ***22.00%*** | *0.00%* | *0.00%* | *0.00%* | *0.00%* | *0.00%* | *0.00%* | *0.00%* | *0.00%* | *0.00%* | *0.00%* |
| *Percent Office Trips Generated(Entering)* | *0.00%* | *0.00%* | *0.00%* | *0.00%* | ***15.00%*** | *0.00%* | *0.00%* | *0.00%* | *0.00%* | *0.00%* | *0.00%* | *0.00%* |
| *Percent Office Trips Generated(Exiting)* | *0.00%* | ***15.00%*** | *0.00%* | *0.00%* | *0.00%* | *0.00%* | *0.00%* | *0.00%* | *0.00%* | *0.00%* | *0.00%* | *0.00%* |
| Total Trips Generated | 0 | 46 | 46 | 49 | 51 | 0 | 27 | 0 | 7 | 0 | 0 | 0 |
| **Total PM Peak Hour BUILD Volumes** | **0** | **352** | **46** | **49** | **386** | **0** | **27** | **0** | **7** | **0** | **0** | **0** |

| | Entering | Exiting | | |
|---|---|---|---|---|
| Number of Residential Trips Generated | **126** | **44** | A.M. | |
| | **177** | **105** | P.M. | |
| Number of Commercial Trips Generated | **94** | **87** | A.M. | 100% Commercial Development |
| | **49** | **49** | P.M. | |
| Number of Office Trips Generated | **175** | **46** | A.M. | 100% Office Development |
| | **98** | **231** | P.M. | |

2025
**NO BUILD**

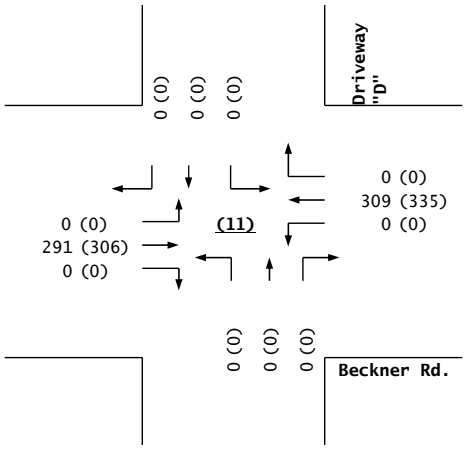


**Trips**

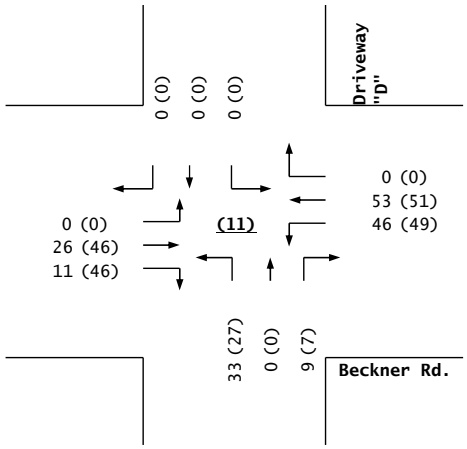


2025
**BUILD**

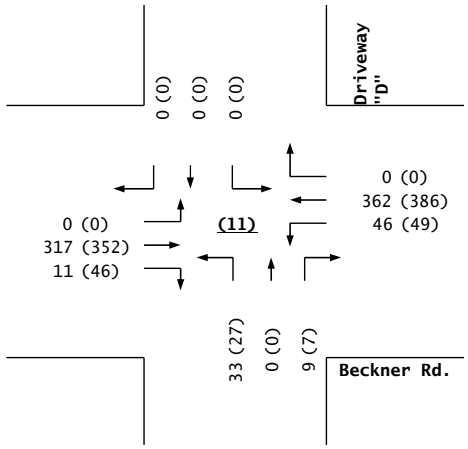


**Beckner Rd. / Driveway "D"**

# *Las Soleras, Tracts 18A & 18B*

Projected Turning Movements SUMMARY

***PROPOSED DEVELOPMENT (2035) - 100% Development***

**INTERSECTION:** **Summary**

**Beckner Rd. / Cerrillos Rd.**

(1)

| 3.0% Truck | 0.86 PHF | | | 0.86 PHF | | | 0.86 PHF | | | 0.86 PHF | | |
|---|---|---|---|---|---|---|---|---|---|---|---|---|
| | Eastbound (Beckner Rd.) | | | Westbound (Beckner Rd.) | | | Northbound (Cerrillos Rd.) | | | Southbound (Cerrillos Rd.) | | |
| | Left | Thru | Right | Left | Thru | Right | Left | Thru | Right | Left | Thru | Right |
| **Existing (2024)** | 308 | 62 | 72 | 76 | 30 | 22 | 72 | 1,171 | 134 | 24 | 739 | 156 |
| ***2035 (NO BUILD - A.M.)*** | *435* | *125* | *92* | *218* | *78* | *54* | *91* | *1,479* | *298* | *50* | *920* | *189* |
| ***2035 (BUILD - A.M.)*** | ***435*** | ***128*** | ***92*** | ***242*** | ***80*** | ***105*** | ***91*** | ***1,479*** | ***333*** | ***113*** | ***920*** | ***189*** |
| | 0.96 PHF | | | 0.96 PHF | | | 0.96 PHF | | | 0.96 PHF | | |
| | Eastbound (Beckner Rd.) | | | Westbound (Beckner Rd.) | | | Northbound (Cerrillos Rd.) | | | Southbound (Cerrillos Rd.) | | |
| | Left | Thru | Right | Left | Thru | Right | Left | Thru | Right | Left | Thru | Right |
| **Existing (2024)** | 226 | 18 | 48 | 135 | 27 | 56 | 70 | 977 | 74 | 30 | 1,242 | 276 |
| ***2035 (NO BUILD - P.M.)*** | *322* | *50* | *61* | *329* | *95* | *127* | *95* | *1,273* | *186* | *66* | *1,518* | *358* |
| ***2035 (BUILD - P.M.)*** | ***322*** | ***53*** | ***61*** | ***380*** | ***98*** | ***204*** | ***95*** | ***1,273*** | ***224*** | ***131*** | ***1,518*** | ***358*** |

**Herrera Rd. / Cerrillos Rd.**

(2)

| 3.0% Truck | 0.85 PHF | | | 0.85 PHF | | | 0.85 PHF | | | 0.85 PHF | | |
|---|---|---|---|---|---|---|---|---|---|---|---|---|
| | Eastbound (Herrera Rd.) | | | Westbound (Herrera Rd.) | | | Northbound (Cerrillos Rd.) | | | Southbound (Cerrillos Rd.) | | |
| | Left | Thru | Right | Left | Thru | Right | Left | Thru | Right | Left | Thru | Right |
| **Existing (2024)** | 127 | 66 | 164 | 85 | 87 | 38 | 244 | 1,094 | 97 | 48 | 698 | 64 |
| ***2035 (NO BUILD - A.M.)*** | *154* | *133* | *216* | *108* | *148* | *76* | *322* | *1,371* | *169* | *96* | *872* | *78* |
| ***2035 (BUILD - A.M.)*** | ***154*** | ***168*** | ***246*** | ***108*** | ***162*** | ***128*** | ***322*** | ***1,388*** | ***169*** | ***195*** | ***935*** | ***78*** |
| | 0.95 PHF | | | 0.95 PHF | | | 0.95 PHF | | | 0.95 PHF | | |
| | Eastbound (Herrera Rd.) | | | Westbound (Herrera Rd.) | | | Northbound (Cerrillos Rd.) | | | Southbound (Cerrillos Rd.) | | |
| | Left | Thru | Right | Left | Thru | Right | Left | Thru | Right | Left | Thru | Right |
| **Existing (2024)** | 87 | 58 | 193 | 129 | 68 | 72 | 215 | 955 | 55 | 27 | 1,236 | 55 |
| ***2035 (NO BUILD - P.M.)*** | *106* | *112* | *251* | *159* | *141* | *158* | *288* | *1,220* | *121* | *76* | *1,515* | *67* |
| ***2035 (BUILD - P.M.)*** | ***106*** | ***140*** | ***268*** | ***159*** | ***177*** | ***259*** | ***288*** | ***1,230*** | ***121*** | ***175*** | ***1,580*** | ***67*** |

**Beckner Rd. / Richards Ave.**

(3)

| 3.0% Truck | 0.68 PHF | | | 0.68 PHF | | | 0.68 PHF | | | 0.68 PHF | | |
|---|---|---|---|---|---|---|---|---|---|---|---|---|
| | Eastbound (Beckner Rd.) | | | Westbound (Beckner Rd.) | | | Northbound (Richards Ave.) | | | Southbound (Richards Ave.) | | |
| | Left | Thru | Right | Left | Thru | Right | Left | Thru | Right | Left | Thru | Right |
| **Existing (2024)** | 68 | 21 | 64 | 6 | 8 | 99 | 52 | 361 | 23 | 94 | 340 | 82 |
| ***2035 (NO BUILD - A.M.)*** | *181* | *36* | *126* | *8* | *24* | *120* | *121* | *437* | *28* | *113* | *412* | *207* |
| ***2035 (BUILD - A.M.)*** | ***217*** | ***38*** | ***141*** | ***8*** | ***27*** | ***120*** | ***138*** | ***437*** | ***28*** | ***113*** | ***412*** | ***243*** |
| | 0.96 PHF | | | 0.96 PHF | | | 0.96 PHF | | | 0.96 PHF | | |
| | Eastbound (Beckner Rd.) | | | Westbound (Beckner Rd.) | | | Northbound (Richards Ave.) | | | Southbound (Richards Ave.) | | |
| | Left | Thru | Right | Left | Thru | Right | Left | Thru | Right | Left | Thru | Right |
| **Existing (2024)** | 77 | 3 | 63 | 0 | 2 | 4 | 42 | 331 | 0 | 9 | 364 | 98 |
| ***2035 (NO BUILD - P.M.)*** | *193* | *10* | *119* | *0* | *10* | *5* | *133* | *401* | *0* | *11* | *441* | *295* |
| ***2035 (BUILD - P.M.)*** | ***240*** | ***13*** | ***136*** | ***0*** | ***13*** | ***5*** | ***148*** | ***401*** | ***0*** | ***11*** | ***441*** | ***341*** |

**Beckner Rd. / Wellness Way**

(4)

| 3.0% Truck | 0.72 PHF | | | 0.72 PHF | | | 0.72 PHF | | | 0.72 PHF | | |
|---|---|---|---|---|---|---|---|---|---|---|---|---|
| | Eastbound (Beckner Rd.) | | | Westbound (Beckner Rd.) | | | Northbound (Wellness Way) | | | Southbound (Wellness Way) | | |
| | Left | Thru | Right | Left | Thru | Right | Left | Thru | Right | Left | Thru | Right |
| **Existing (2024)** | 27 | 141 | 0 | 0 | 74 | 63 | 0 | 0 | 0 | 45 | 0 | 4 |
| ***2035 (NO BUILD - A.M.)*** | *38* | *401* | *0* | *0* | *219* | *113* | *0* | *0* | *0* | *142* | *0* | *57* |
| ***2035 (BUILD - A.M.)*** | ***38*** | ***503*** | ***0*** | ***0*** | ***298*** | ***213*** | ***0*** | ***0*** | ***0*** | ***271*** | ***0*** | ***57*** |
| | 0.88 PHF | | | 0.88 PHF | | | 0.88 PHF | | | 0.88 PHF | | |
| | Eastbound (Beckner Rd.) | | | Westbound (Beckner Rd.) | | | Northbound (Wellness Way) | | | Southbound (Wellness Way) | | |
| | Left | Thru | Right | Left | Thru | Right | Left | Thru | Right | Left | Thru | Right |
| **Existing (2024)** | 18 | 69 | 0 | 0 | 89 | 53 | 0 | 0 | 0 | 61 | 0 | 104 |
| ***2035 (NO BUILD - P.M.)*** | *38* | *237* | *0* | *0* | *308* | *180* | *0* | *0* | *0* | *131* | *0* | *170* |
| ***2035 (BUILD - P.M.)*** | ***38*** | ***342*** | ***0*** | ***0*** | ***439*** | ***337*** | ***0*** | ***0*** | ***0*** | ***257*** | ***0*** | ***170*** |

# *Las Soleras, Tracts 18A & 18B*

Projected Turning Movements SUMMARY

***PROPOSED DEVELOPMENT (2035) - 100% Development***

**INTERSECTION:** **Summary**

**Beckner Rd. / Las Soleras Dr.**

| (5) 3.0% Truck | 0.87 Eastbound (Beckner Rd.) | | | 0.87 Westbound (Beckner Rd.) | | | 0.87 Northbound (Las Soleras Dr.) | | | 0.87 Southbound (Las Soleras Dr.) | | | PHF |
|---|---|---|---|---|---|---|---|---|---|---|---|---|---|
| | Left | Thru | Right | Left | Thru | Right | Left | Thru | Right | Left | Thru | Right | |
| **Existing (2024)** | 4 | 156 | 0 | 0 | 146 | 1 | 0 | 0 | 0 | 1 | 0 | 2 | |
| ***2035 (NO BUILD - A.M.)*** | *8* | *434* | *9* | *29* | *315* | *1* | *16* | *0* | *4* | *8* | *44* | *11* | |
| ***2035 (BUILD - A.M.)*** | ***8*** | ***663*** | ***9*** | ***29*** | ***485*** | ***2*** | ***16*** | ***0*** | ***4*** | ***9*** | ***44*** | ***11*** | |

| | 0.63 Eastbound (Beckner Rd.) | | | 0.63 Westbound (Beckner Rd.) | | | 0.63 Northbound (Las Soleras Dr.) | | | 0.63 Southbound (Las Soleras Dr.) | | | PHF |
|---|---|---|---|---|---|---|---|---|---|---|---|---|---|
| | Left | Thru | Right | Left | Thru | Right | Left | Thru | Right | Left | Thru | Right | |
| **Existing (2024)** | 7 | 135 | 0 | 0 | 99 | 10 | 0 | 0 | 0 | 7 | 0 | 5 | |
| ***2035 (NO BUILD - P.M.)*** | *18* | *328* | *44* | *20* | *373* | *13* | *60* | *0* | *12* | *13* | *20* | *11* | |
| ***2035 (BUILD - P.M.)*** | ***18*** | ***559*** | ***44*** | ***20*** | ***615*** | ***13*** | ***60*** | ***0*** | ***12*** | ***13*** | ***20*** | ***11*** | |

**Beckner Rd. / Rail Runner Rd.**

| (6) 3.0% Truck | 0.78 Eastbound (Beckner Rd.) | | | 0.78 Westbound (Beckner Rd.) | | | 0.78 Northbound (Rail Runner Rd.) | | | 0.78 Southbound (Rail Runner Rd.) | | | PHF |
|---|---|---|---|---|---|---|---|---|---|---|---|---|---|
| | Left | Thru | Right | Left | Thru | Right | Left | Thru | Right | Left | Thru | Right | |
| **Existing (2024)** | 28 | 127 | 0 | 0 | 114 | 62 | 0 | 0 | 0 | 18 | 0 | 30 | |
| ***2035 (NO BUILD - A.M.)*** | *55* | *378* | *0* | *0* | *259* | *82* | *0* | *0* | *0* | *38* | *0* | *55* | |
| ***2035 (BUILD - A.M.)*** | ***55*** | ***608*** | ***0*** | ***0*** | ***439*** | ***105*** | ***0*** | ***0*** | ***0*** | ***61*** | ***0*** | ***55*** | |

| | 0.85 Eastbound (Beckner Rd.) | | | 0.85 Westbound (Beckner Rd.) | | | 0.85 Northbound (Rail Runner Rd.) | | | 0.85 Southbound (Rail Runner Rd.) | | | PHF |
|---|---|---|---|---|---|---|---|---|---|---|---|---|---|
| | Left | Thru | Right | Left | Thru | Right | Left | Thru | Right | Left | Thru | Right | |
| **Existing (2024)** | 18 | 127 | 0 | 0 | 94 | 31 | 0 | 0 | 0 | 22 | 0 | 20 | |
| ***2035 (NO BUILD - P.M.)*** | *45* | *278* | *0* | *0* | *368* | *57* | *0* | *0* | *0* | *37* | *0* | *51* | |
| ***2035 (BUILD - P.M.)*** | ***45*** | ***509*** | ***0*** | ***0*** | ***656*** | ***80*** | ***0*** | ***0*** | ***0*** | ***61*** | ***0*** | ***51*** | |

**Beckner Rd. / Walking Rain**

| (7) 3.0% Truck | 0.93 Eastbound (Beckner Rd.) | | | 0.93 Westbound (Beckner Rd.) | | | 0.93 Northbound (Walking Rain) | | | 0.93 Southbound (Walking Rain) | | | PHF |
|---|---|---|---|---|---|---|---|---|---|---|---|---|---|
| | Left | Thru | Right | Left | Thru | Right | Left | Thru | Right | Left | Thru | Right | |
| **Existing (2024)** | 19 | 80 | 0 | 0 | 104 | 23 | 0 | 0 | 0 | 46 | 0 | 29 | |
| ***2035 (NO BUILD - A.M.)*** | *23* | *252* | *140* | *68* | *238* | *28* | *33* | *3* | *8* | *57* | *16* | *35* | |
| ***2035 (BUILD - A.M.)*** | ***23*** | ***346*** | ***300*** | ***115*** | ***335*** | ***29*** | ***139*** | ***4*** | ***32*** | ***58*** | ***16*** | ***35*** | |

| | 0.95 Eastbound (Beckner Rd.) | | | 0.95 Westbound (Beckner Rd.) | | | 0.95 Northbound (Walking Rain) | | | 0.95 Southbound (Walking Rain) | | | PHF |
|---|---|---|---|---|---|---|---|---|---|---|---|---|---|
| | Left | Thru | Right | Left | Thru | Right | Left | Thru | Right | Left | Thru | Right | |
| **Existing (2024)** | 30 | 116 | 0 | 0 | 95 | 36 | 0 | 0 | 0 | 28 | 0 | 18 | |
| ***2035 (NO BUILD - P.M.)*** | *37* | *246* | *69* | *29* | *287* | *44* | *175* | *21* | *13* | *35* | *8* | *21* | |
| ***2035 (BUILD - P.M.)*** | ***37*** | ***415*** | ***156*** | ***55*** | ***368*** | ***45*** | ***407*** | ***23*** | ***47*** | ***37*** | ***8*** | ***21*** | |

**Beckner Rd. / Driveway "A"**

| (8) 3.0% Truck | 0.93 Eastbound (Beckner Rd.) | | | 0.93 Westbound (Beckner Rd.) | | | 0.93 Northbound (Driveway "A") | | | 0.93 Southbound (Driveway "A") | | | PHF |
|---|---|---|---|---|---|---|---|---|---|---|---|---|---|
| | Left | Thru | Right | Left | Thru | Right | Left | Thru | Right | Left | Thru | Right | |
| **Existing (2024)** | 0 | 126 | 0 | 0 | 127 | 0 | 0 | 0 | 0 | 0 | 0 | 0 | |
| ***2035 (NO BUILD - A.M.)*** | *0* | *296* | *21* | *0* | *334* | *0* | *0* | *0* | *19* | *0* | *0* | *0* | |
| ***2035 (BUILD - A.M.)*** | ***0*** | ***335*** | ***82*** | ***0*** | ***479*** | ***0*** | ***0*** | ***0*** | ***21*** | ***0*** | ***0*** | ***0*** | |

| | 0.95 Eastbound (Beckner Rd.) | | | 0.95 Westbound (Beckner Rd.) | | | 0.95 Northbound (Driveway "A") | | | 0.95 Southbound (Driveway "A") | | | PHF |
|---|---|---|---|---|---|---|---|---|---|---|---|---|---|
| | Left | Thru | Right | Left | Thru | Right | Left | Thru | Right | Left | Thru | Right | |
| **Existing (2024)** | 0 | 145 | 0 | 0 | 131 | 0 | 0 | 0 | 0 | 0 | 0 | 0 | |
| ***2035 (NO BUILD - P.M.)*** | *0* | *282* | *12* | *0* | *360* | *0* | *0* | *0* | *52* | *0* | *0* | *0* | |
| ***2035 (BUILD - P.M.)*** | ***0*** | ***443*** | ***46*** | ***0*** | ***468*** | ***0*** | ***0*** | ***0*** | ***64*** | ***0*** | ***0*** | ***0*** | |

# *Las Soleras, Tracts 18A & 18B*

Projected Turning Movements SUMMARY

***PROPOSED DEVELOPMENT (2035) - 100% Development***

**INTERSECTION:** **Summary**

**Beckner Rd. / Driveway "B"**

(9)

3.0% Truck

| | 0.97 | | | 0.97 | | | 0.97 | | | 0.97 | | | PHF |
|---|---|---|---|---|---|---|---|---|---|---|---|---|---|
| | Eastbound (Beckner Rd.) | | | Westbound (Beckner Rd.) | | | Northbound (Driveway "B") | | | Southbound (Driveway "B") | | | |
| | Left | Thru | Right | Left | Thru | Right | Left | Thru | Right | Left | Thru | Right | |
| **Existing (2024)** | 0 | 0 | 0 | 0 | 0 | 0 | 0 | 0 | 0 | 0 | 0 | 0 | |
| ***2035 (NO BUILD - A.M.)*** | *0* | *315* | *0* | *0* | *334* | *0* | *0* | *0* | *0* | *0* | *0* | *0* | |
| ***2035 (BUILD - A.M.)*** | ***0*** | ***364*** | ***11*** | ***45*** | ***381*** | ***0*** | ***33*** | ***0*** | ***9*** | ***0*** | ***0*** | ***0*** | |

| | 0.89 | | | 0.89 | | | 0.89 | | | 0.89 | | | PHF |
|---|---|---|---|---|---|---|---|---|---|---|---|---|---|
| | Eastbound (Beckner Rd.) | | | Westbound (Beckner Rd.) | | | Northbound (Driveway "B") | | | Southbound (Driveway "B") | | | |
| | Left | Thru | Right | Left | Thru | Right | Left | Thru | Right | Left | Thru | Right | |
| **Existing (2024)** | 0 | 0 | 0 | 0 | 0 | 0 | 0 | 0 | 0 | 0 | 0 | 0 | |
| ***2035 (NO BUILD - P.M.)*** | *0* | *334* | *0* | *0* | *360* | *0* | *0* | *0* | *0* | *0* | *0* | *0* | |
| ***2035 (BUILD - P.M.)*** | ***0*** | ***472*** | ***46*** | ***47*** | ***386*** | ***0*** | ***27*** | ***0*** | ***7*** | ***0*** | ***0*** | ***0*** | |

**Beckner Rd. / Driveway "C"**

(10)

3.0% Truck

| | 0.90 | | | 0.90 | | | 0.90 | | | 0.90 | | | PHF |
|---|---|---|---|---|---|---|---|---|---|---|---|---|---|
| | Eastbound (Beckner Rd.) | | | Westbound (Beckner Rd.) | | | Northbound (Driveway "C") | | | Southbound (Driveway "C") | | | |
| | Left | Thru | Right | Left | Thru | Right | Left | Thru | Right | Left | Thru | Right | |
| **Existing (2024)** | 0 | 0 | 0 | 0 | 0 | 0 | 0 | 0 | 0 | 0 | 0 | 0 | |
| ***2035 (NO BUILD - A.M.)*** | *0* | *315* | *0* | *0* | *334* | *0* | *0* | *0* | *0* | *0* | *0* | *0* | |
| ***2035 (BUILD - A.M.)*** | ***0*** | ***352*** | ***11*** | ***45*** | ***384*** | ***0*** | ***33*** | ***0*** | ***9*** | ***0*** | ***0*** | ***0*** | |

| | 0.90 | | | 0.90 | | | 0.90 | | | 0.90 | | | PHF |
|---|---|---|---|---|---|---|---|---|---|---|---|---|---|
| | Eastbound (Beckner Rd.) | | | Westbound (Beckner Rd.) | | | Northbound (Driveway "C") | | | Southbound (Driveway "C") | | | |
| | Left | Thru | Right | Left | Thru | Right | Left | Thru | Right | Left | Thru | Right | |
| **Existing (2024)** | 0 | 0 | 0 | 0 | 0 | 0 | 0 | 0 | 0 | 0 | 0 | 0 | |
| ***2035 (NO BUILD - P.M.)*** | *0* | *334* | *0* | *0* | *360* | *0* | *0* | *0* | *0* | *0* | *0* | *0* | |
| ***2035 (BUILD - P.M.)*** | ***0*** | ***426*** | ***46*** | ***47*** | ***398*** | ***0*** | ***27*** | ***0*** | ***7*** | ***0*** | ***0*** | ***0*** | |

**Beckner Rd. / Driveway "D"**

(11)

3.0% Truck

| | 0.90 | | | 0.90 | | | 0.90 | | | 0.90 | | | PHF |
|---|---|---|---|---|---|---|---|---|---|---|---|---|---|
| | Eastbound (Beckner Rd.) | | | Westbound (Beckner Rd.) | | | Northbound (Driveway "C") | | | Southbound (Driveway "C") | | | |
| | Left | Thru | Right | Left | Thru | Right | Left | Thru | Right | Left | Thru | Right | |
| **Existing (2024)** | 0 | 0 | 0 | 0 | 0 | 0 | 0 | 0 | 0 | 0 | 0 | 0 | |
| ***2035 (NO BUILD - A.M.)*** | *0* | *315* | *0* | *0* | *334* | *0* | *0* | *0* | *0* | *0* | *0* | *0* | |
| ***2035 (BUILD - A.M.)*** | ***0*** | ***352*** | ***11*** | ***45*** | ***384*** | ***0*** | ***33*** | ***0*** | ***9*** | ***0*** | ***0*** | ***0*** | |

| | 0.90 | | | 0.90 | | | 0.90 | | | 0.90 | | | PHF |
|---|---|---|---|---|---|---|---|---|---|---|---|---|---|
| | Eastbound (Beckner Rd.) | | | Westbound (Beckner Rd.) | | | Northbound (Driveway "C") | | | Southbound (Driveway "C") | | | |
| | Left | Thru | Right | Left | Thru | Right | Left | Thru | Right | Left | Thru | Right | |
| **Existing (2024)** | 0 | 0 | 0 | 0 | 0 | 0 | 0 | 0 | 0 | 0 | 0 | 0 | |
| ***2035 (NO BUILD - P.M.)*** | *0* | *334* | *0* | *0* | *360* | *0* | *0* | *0* | *0* | *0* | *0* | *0* | |
| ***2035 (BUILD - P.M.)*** | ***0*** | ***426*** | ***46*** | ***47*** | ***398*** | ***0*** | ***27*** | ***0*** | ***7*** | ***0*** | ***0*** | ***0*** | |

# *Las Soleras, Tracts 18A & 18B*

Projected Turning Movements Worksheet

***Beckner Rd. / Cerrillos Rd.***

**INTERSECTION:** E-W Street: **Beckner Rd.** (1)

N-S Street: **Cerrillos Rd.**

Year of Existing Counts 2022

Horizon Year **2035**

| **Growth Rates** | **2.00%** | | | **2.00%** | | | **2.00%** | | | **2.00%** | | |
|---|---|---|---|---|---|---|---|---|---|---|---|---|
| | **Eastbound (Beckner Rd.)** | | | **Westbound (Beckner Rd.)** | | | **Northbound (Cerrillos Rd.)** | | | **Southbound (Cerrillos Rd.)** | | |
| | Left | Thru | Right | Left | Thru | Right | Left | Thru | Right | Left | Thru | Right |
| Existing Volumes | 296 | 60 | 69 | 73 | 29 | 21 | 69 | 1,126 | 129 | 23 | 711 | 150 |
| Background Traffic Growth | 77 | 16 | 18 | 19 | 8 | 5 | 18 | 293 | 34 | 6 | 185 | 39 |
| *Subtotal* | 373 | 76 | 87 | 92 | 37 | 26 | 87 | 1,419 | 163 | 29 | 896 | 189 |
| Medical Office Buiding Trips | 0 | 30 | 0 | 9 | 3 | 2 | 0 | 0 | 70 | 5 | 0 | 0 |
| Vista de la Sierra Trips | 0 | 1 | 0 | 15 | 1 | 6 | 0 | 0 | 20 | 8 | 0 | 0 |
| Other Developments (See Below) | 62 | 18 | 5 | 102 | 37 | 20 | 4 | 60 | 45 | 8 | 24 | 0 |
| ***Subtotal (NO BUILD - A.M.)*** | ***435*** | ***125*** | ***92*** | ***218*** | ***78*** | ***54*** | ***91*** | ***1,479*** | ***298*** | ***50*** | ***920*** | ***189*** |
| *Percent Residential Trips Generated(Entering)* | *0.00%* | ***1.00%*** | *0.00%* | *0.00%* | *0.00%* | *0.00%* | *0.00%* | *0.00%* | ***12.00%*** | ***20.00%*** | *0.00%* | *0.00%* |
| *Percent Residential Trips Generated(Exiting)* | *0.00%* | *0.00%* | *0.00%* | ***12.00%*** | ***1.00%*** | ***20.00%*** | *0.00%* | *0.00%* | *0.00%* | *0.00%* | *0.00%* | *0.00%* |
| *Percent Commercial Trips Generated(Entering)* | *0.00%* | ***1.00%*** | *0.00%* | *0.00%* | *0.00%* | *0.00%* | *0.00%* | *0.00%* | ***2.00%*** | ***20.00%*** | *0.00%* | *0.00%* |
| *Percent Commercial Trips Generated(Exiting)* | *0.00%* | *0.00%* | *0.00%* | ***2.00%*** | ***1.00%*** | ***20.00%*** | *0.00%* | *0.00%* | *0.00%* | *0.00%* | *0.00%* | *0.00%* |
| *Percent Office Trips Generated(Entering)* | *0.00%* | ***1.00%*** | *0.00%* | *0.00%* | *0.00%* | *0.00%* | *0.00%* | *0.00%* | ***16.00%*** | ***20.00%*** | *0.00%* | *0.00%* |
| *Percent Office Trips Generated(Exiting)* | *0.00%* | *0.00%* | *0.00%* | ***16.00%*** | ***1.00%*** | ***20.00%*** | *0.00%* | *0.00%* | *0.00%* | *0.00%* | *0.00%* | *0.00%* |
| Total Trips Generated | 0 | 3 | 0 | 24 | 2 | 51 | 0 | 0 | 35 | 63 | 0 | 0 |
| **Total AM Peak Hour BUILD Volumes** | **435** | **128** | **92** | **242** | **80** | **105** | **91** | **1,479** | **333** | **113** | **920** | **189** |

| | **Eastbound (Beckner Rd.)** | | | **Westbound (Beckner Rd.)** | | | **Northbound (Cerrillos Rd.)** | | | **Southbound (Cerrillos Rd.)** | | |
|---|---|---|---|---|---|---|---|---|---|---|---|---|
| | Left | Thru | Right | Left | Thru | Right | Left | Thru | Right | Left | Thru | Right |
| Existing Volumes | 217 | 17 | 46 | 130 | 26 | 54 | 67 | 939 | 71 | 29 | 1,194 | 265 |
| Background Traffic Growth | 56 | 4 | 12 | 34 | 7 | 14 | 17 | 244 | 18 | 8 | 310 | 69 |
| *Subtotal* | 273 | 21 | 58 | 164 | 33 | 68 | 84 | 1,183 | 89 | 37 | 1,504 | 334 |
| Medical Office Buiding Trips | 0 | 4 | 0 | 52 | 16 | 34 | 0 | 0 | 25 | 12 | 0 | 0 |
| Vista de la Sierra Trips | 0 | 1 | 0 | 8 | 1 | 4 | 0 | 0 | 11 | 6 | 0 | 0 |
| Other Developments (See Below) | 49 | 24 | 3 | 105 | 45 | 21 | 11 | 90 | 61 | 11 | 14 | 24 |
| ***Subtotal (NO BUILD - P.M.)*** | ***322*** | ***50*** | ***61*** | ***329*** | ***95*** | ***127*** | ***95*** | ***1,273*** | ***186*** | ***66*** | ***1,518*** | ***358*** |
| *Percent Residential Trips Generated(Entering)* | *0.00%* | ***1.00%*** | *0.00%* | *0.00%* | *0.00%* | *0.00%* | *0.00%* | *0.00%* | ***12.00%*** | ***20.00%*** | *0.00%* | *0.00%* |
| *Percent Residential Trips Generated(Exiting)* | *0.00%* | *0.00%* | *0.00%* | ***12.00%*** | ***1.00%*** | ***20.00%*** | *0.00%* | *0.00%* | *0.00%* | *0.00%* | *0.00%* | *0.00%* |
| *Percent Commercial Trips Generated(Entering)* | *0.00%* | ***1.00%*** | *0.00%* | *0.00%* | *0.00%* | *0.00%* | *0.00%* | *0.00%* | ***2.00%*** | ***20.00%*** | *0.00%* | *0.00%* |
| *Percent Commercial Trips Generated(Exiting)* | *0.00%* | *0.00%* | *0.00%* | ***2.00%*** | ***1.00%*** | ***20.00%*** | *0.00%* | *0.00%* | *0.00%* | *0.00%* | *0.00%* | *0.00%* |
| *Percent Office Trips Generated(Entering)* | *0.00%* | ***1.00%*** | *0.00%* | *0.00%* | *0.00%* | *0.00%* | *0.00%* | *0.00%* | ***16.00%*** | ***20.00%*** | *0.00%* | *0.00%* |
| *Percent Office Trips Generated(Exiting)* | *0.00%* | *0.00%* | *0.00%* | ***16.00%*** | ***1.00%*** | ***20.00%*** | *0.00%* | *0.00%* | *0.00%* | *0.00%* | *0.00%* | *0.00%* |
| Total Trips Generated | 0 | 3 | 0 | 51 | 3 | 77 | 0 | 0 | 38 | 65 | 0 | 0 |
| **Total PM Peak Hour BUILD Volumes** | **322** | **53** | **61** | **380** | **98** | **204** | **95** | **1,273** | **224** | **131** | **1,518** | **358** |

| | Entering | Exiting | | |
|---|---|---|---|---|
| Number of Residential Trips Generated | **44** | **126** | A.M. | 100% Residential Development |
| | **177** | **105** | P.M. | |
| Number of Commercial Trips Generated | **94** | **87** | A.M. | 100% Commercial Development |
| | **49** | **49** | P.M. | |
| Number of Office Trips Generated | **175** | **46** | A.M. | 100% Office Development |
| | **98** | **231** | P.M. | |

**AM Peak - Other Developments**

| | | | | | | | | | | | | |
|---|---|---|---|---|---|---|---|---|---|---|---|---|
| Cielo Apts. Trips | 0 | 2 | 0 | 19 | 5 | 4 | 0 | 0 | 4 | 1 | 0 | 0 |
| Village at Las Soleras Trip | 0 | 0 | 0 | 0 | 0 | 0 | 0 | 9 | 0 | 0 | 23 | 0 |
| Cavan Development Trips | 51 | 9 | 5 | 0 | 3 | 0 | 4 | 0 | 0 | 7 | 0 | 0 |
| 5201 Beckner Rd. Trips | 2 | 0 | 0 | 11 | 6 | 1 | 0 | 0 | 3 | 0 | 1 | 0 |
| Hevenly Santa Fe Trips | 0 | 3 | 0 | 17 | 8 | 0 | 0 | 0 | 6 | 0 | 0 | 0 |
| Presbyterian Medical Offices | 0 | 4 | 0 | 8 | 0 | 0 | 0 | 0 | 32 | 0 | 0 | 0 |
| 5407 Beckner Rd. Trips | 9 | 0 | 0 | 47 | 15 | 15 | 0 | 51 | 0 | 0 | 0 | 0 |
| Subtotal (AM Peak) - Projects Above - | 62 | 18 | 5 | 102 | 37 | 20 | 4 | 60 | 45 | 8 | 24 | 0 |

**PM Peak - Other Developments**

| | | | | | | | | | | | | |
|---|---|---|---|---|---|---|---|---|---|---|---|---|
| Cielo Apts. Trips | 0 | 5 | 0 | 7 | 2 | 4 | 0 | 0 | 15 | 10 | 0 | 0 |
| Village at Las Soleras Trip | 0 | 0 | 0 | 0 | 0 | 0 | 0 | 39 | 0 | 0 | 13 | 0 |
| Cavan Development Trips | 36 | 6 | 3 | 0 | 11 | 0 | 11 | 0 | 0 | 0 | 0 | 24 |
| 5201 Beckner Rd. Trips | 5 | 0 | 0 | 6 | 3 | 1 | 0 | 1 | 11 | 1 | 1 | 0 |
| Hevenly Santa Fe Trips | 0 | 9 | 0 | 11 | 5 | 0 | 0 | 0 | 19 | 0 | 0 | 0 |
| Presbyterian Medical Offices | 0 | 4 | 0 | 36 | 8 | 0 | 0 | 0 | 16 | 0 | 0 | 0 |
| 5407 Beckner Rd. Trips | 8 | 0 | 0 | 45 | 16 | 16 | 0 | 50 | 0 | 0 | 0 | 0 |
| Subtotal (PM Peak) - Projects Above - | 49 | 24 | 3 | 105 | 45 | 21 | 11 | 90 | 61 | 11 | 14 | 24 |

2035
**NO BUILD**

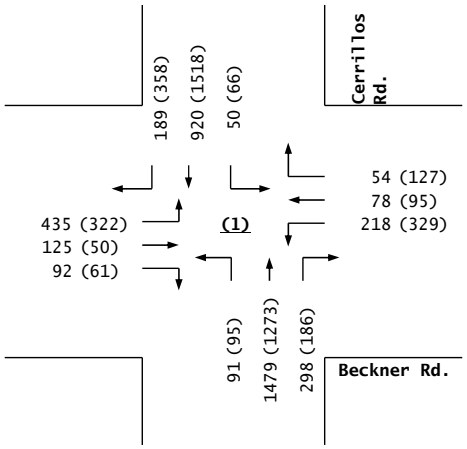


**Trips**

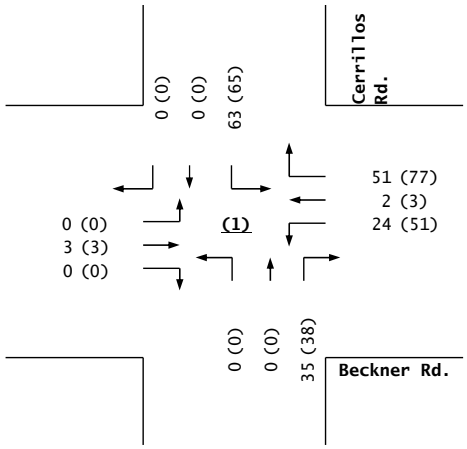


2035
**BUILD**

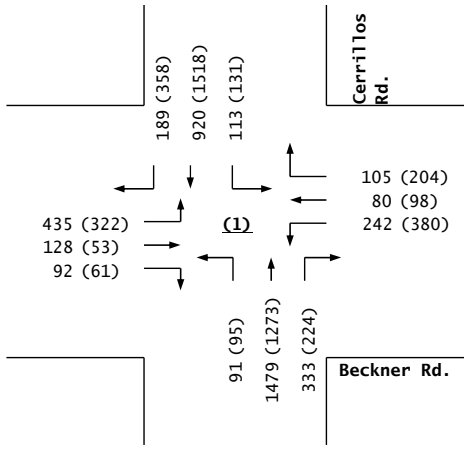


**Beckner Rd. / Cerrillos Rd.**

# *Las Soleras, Tracts 18A & 18B*

Projected Turning Movements Worksheet

***Herrera Rd. / Cerrillos Rd.***

**INTERSECTION:** E-W Street: **Herrera Rd.** (2)

N-S Street: **Cerrillos Rd.**

Year of Existing Counts 2022

Horizon Year **2035**

**Growth Rates** **2.00%** **2.00%** **2.00%** **2.00%**

| | Eastbound (Herrera Rd.) | | | Westbound (Herrera Rd.) | | | Northbound (Cerrillos Rd.) | | | Southbound (Cerrillos Rd.) | | |
|---|---|---|---|---|---|---|---|---|---|---|---|---|
| | Left | Thru | Right | Left | Thru | Right | Left | Thru | Right | Left | Thru | Right |
| Existing Volumes | 122 | 63 | 158 | 82 | 84 | 37 | 235 | 1,052 | 93 | 46 | 671 | 62 |
| Background Traffic Growth | 32 | 16 | 41 | 21 | 22 | 10 | 61 | 274 | 24 | 12 | 174 | 16 |
| *Subtotal* | 154 | 79 | 199 | 103 | 106 | 47 | 296 | 1,326 | 117 | 58 | 845 | 78 |
| Medical Office Buiding Trips | 0 | 30 | 0 | 0 | 13 | 5 | 0 | 0 | 0 | 19 | 0 | 0 |
| Vista de la Sierra Trips | 0 | 5 | 0 | 0 | 5 | 5 | 0 | 0 | 5 | 5 | 0 | 0 |
| Other Developments (See Below) | 0 | 19 | 17 | 5 | 24 | 19 | 26 | 45 | 47 | 14 | 27 | 0 |
| ***Subtotal (NO BUILD - A.M.)*** | ***154*** | ***133*** | ***216*** | ***108*** | ***148*** | ***76*** | ***322*** | ***1,371*** | ***169*** | ***96*** | ***872*** | ***78*** |
| *Percent Residential Trips Generated(Entering)* | *0.00%* | ***6.00%*** | *0.00%* | *0.00%* | *0.00%* | *0.00%* | *0.00%* | *0.00%* | *0.00%* | ***30.00%*** | ***20.00%*** | *0.00%* |
| *Percent Residential Trips Generated(Exiting)* | *0.00%* | *0.00%* | *0.00%* | *0.00%* | ***6.00%*** | ***30.00%*** | *0.00%* | *0.00%* | *0.00%* | *0.00%* | *0.00%* | *0.00%* |
| *Percent Commercial Trips Generated(Entering)* | *0.00%* | ***5.00%*** | *0.00%* | *0.00%* | *0.00%* | *0.00%* | *0.00%* | *0.00%* | *0.00%* | ***35.00%*** | ***20.00%*** | *0.00%* |
| *Percent Commercial Trips Generated(Exiting)* | *0.00%* | ***5.00%*** | ***35.00%*** | *0.00%* | *0.00%* | *0.00%* | *0.00%* | ***20.00%*** | *0.00%* | *0.00%* | *0.00%* | *0.00%* |
| *Percent Office Trips Generated(Entering)* | *0.00%* | ***13.00%*** | *0.00%* | *0.00%* | *0.00%* | *0.00%* | *0.00%* | *0.00%* | *0.00%* | ***30.00%*** | ***20.00%*** | *0.00%* |
| *Percent Office Trips Generated(Exiting)* | *0.00%* | *0.00%* | *0.00%* | *0.00%* | ***13.00%*** | ***30.00%*** | *0.00%* | *0.00%* | *0.00%* | *0.00%* | *0.00%* | *0.00%* |
| Total Trips Generated | 0 | 35 | 30 | 0 | 14 | 52 | 0 | 17 | 0 | 99 | 63 | 0 |
| **Total AM Peak Hour BUILD Volumes** | **154** | **168** | **246** | **108** | **162** | **128** | **322** | **1,388** | **169** | **195** | **935** | **78** |

| | Eastbound (Herrera Rd.) | | | Westbound (Herrera Rd.) | | | Northbound (Cerrillos Rd.) | | | Southbound (Cerrillos Rd.) | | |
|---|---|---|---|---|---|---|---|---|---|---|---|---|
| | Left | Thru | Right | Left | Thru | Right | Left | Thru | Right | Left | Thru | Right |
| Existing Volumes | 84 | 56 | 186 | 124 | 65 | 69 | 207 | 918 | 53 | 26 | 1,188 | 53 |
| Background Traffic Growth | 22 | 15 | 48 | 32 | 17 | 18 | 54 | 239 | 14 | 7 | 309 | 14 |
| *Subtotal* | 106 | 71 | 234 | 156 | 82 | 87 | 261 | 1,157 | 67 | 33 | 1,497 | 67 |
| Medical Office Buiding Trips | 0 | 9 | 0 | 0 | 26 | 42 | 0 | 0 | 0 | 9 | 0 | 0 |
| Vista de la Sierra Trips | 0 | 10 | 0 | 0 | 10 | 10 | 0 | 0 | 10 | 10 | 0 | 0 |
| Other Developments (See Below) | 0 | 22 | 17 | 3 | 23 | 19 | 27 | 63 | 44 | 24 | 18 | 0 |
| ***Subtotal (NO BUILD - P.M.)*** | ***106*** | ***112*** | ***251*** | ***159*** | ***141*** | ***158*** | ***288*** | ***1,220*** | ***121*** | ***76*** | ***1,515*** | ***67*** |
| *Percent Residential Trips Generated(Entering)* | *0.00%* | ***6.00%*** | *0.00%* | *0.00%* | *0.00%* | *0.00%* | *0.00%* | *0.00%* | *0.00%* | ***30.00%*** | ***20.00%*** | *0.00%* |
| *Percent Residential Trips Generated(Exiting)* | *0.00%* | *0.00%* | *0.00%* | *0.00%* | ***6.00%*** | ***30.00%*** | *0.00%* | *0.00%* | *0.00%* | *0.00%* | *0.00%* | *0.00%* |
| *Percent Commercial Trips Generated(Entering)* | *0.00%* | ***5.00%*** | *0.00%* | *0.00%* | *0.00%* | *0.00%* | *0.00%* | *0.00%* | *0.00%* | ***35.00%*** | ***20.00%*** | *0.00%* |
| *Percent Commercial Trips Generated(Exiting)* | *0.00%* | ***5.00%*** | ***35.00%*** | *0.00%* | *0.00%* | *0.00%* | *0.00%* | ***20.00%*** | *0.00%* | *0.00%* | *0.00%* | *0.00%* |
| *Percent Office Trips Generated(Entering)* | *0.00%* | ***13.00%*** | *0.00%* | *0.00%* | *0.00%* | *0.00%* | *0.00%* | *0.00%* | *0.00%* | ***30.00%*** | ***20.00%*** | *0.00%* |
| *Percent Office Trips Generated(Exiting)* | *0.00%* | *0.00%* | *0.00%* | *0.00%* | ***13.00%*** | ***30.00%*** | *0.00%* | *0.00%* | *0.00%* | *0.00%* | *0.00%* | *0.00%* |
| Total Trips Generated | 0 | 28 | 17 | 0 | 36 | 101 | 0 | 10 | 0 | 99 | 65 | 0 |
| **Total PM Peak Hour BUILD Volumes** | **106** | **140** | **268** | **159** | **177** | **259** | **288** | **1,230** | **121** | **175** | **1,580** | **67** |

| | Entering | Exiting | | |
|---|---|---|---|---|
| Number of Residential Trips Generated | **126** | **44** | A.M. | 100% Residential Development |
| | **177** | **105** | P.M. | |
| Number of Commercial Trips Generated | **94** | **87** | A.M. | 100% Commercial Development |
| | **49** | **49** | P.M. | |
| Number of Office Trips Generated | **175** | **46** | A.M. | 100% Office Development |
| | **98** | **231** | P.M. | |

| | | | | | | | | | | | | |
|---|---|---|---|---|---|---|---|---|---|---|---|---|
| AM Peak - Other Developments | | | | | | | | | | | | |
| Cielo Apts. Trips | 0 | 5 | 0 | 0 | 10 | 10 | 0 | 0 | 5 | 5 | 0 | 0 |
| Village at Las Soleras Trip | 0 | 1 | 0 | 5 | 6 | 1 | 0 | 7 | 2 | 1 | 18 | 0 |
| Cavan Development Trips | 0 | 0 | 0 | 0 | 0 | 0 | 0 | 0 | 0 | 0 | 0 | 0 |
| 5201 Beckner Rd. Trips | 0 | 0 | 0 | 0 | 0 | 0 | 0 | 0 | 0 | 0 | 0 | 0 |
| Hevenly Santa Fe Trips | 0 | 1 | 0 | 0 | 4 | 8 | 0 | 0 | 0 | 4 | 0 | 0 |
| Presbyterian Medical Offices | 0 | 12 | 0 | 0 | 4 | 0 | 0 | 0 | 0 | 4 | 0 | 0 |
| 5407 Beckner Rd. Trips | 0 | 0 | 17 | 0 | 0 | 0 | 26 | 38 | 40 | 0 | 9 | 0 |
| Subtotal (AM Peak) - Projects Above - | 0 | 19 | 17 | 5 | 24 | 19 | 26 | 45 | 47 | 14 | 27 | 0 |
| PM Peak - Other Developments | | | | | | | | | | | | |
| Cielo Apts. Trips | 0 | 10 | 0 | 0 | 5 | 5 | 0 | 0 | 10 | 10 | 0 | 0 |
| Village at Las Soleras Trip | 0 | 3 | 0 | 3 | 3 | 1 | 0 | 23 | 6 | 2 | 10 | 0 |
| Cavan Development Trips | 0 | 0 | 0 | 0 | 0 | 0 | 0 | 0 | 0 | 0 | 0 | 0 |
| 5201 Beckner Rd. Trips | 0 | 0 | 0 | 0 | 0 | 0 | 0 | 0 | 0 | 0 | 0 | 0 |
| Hevenly Santa Fe Trips | 0 | 5 | 0 | 0 | 3 | 5 | 0 | 0 | 0 | 8 | 0 | 0 |
| Presbyterian Medical Offices | 0 | 4 | 0 | 0 | 12 | 8 | 0 | 0 | 0 | 4 | 0 | 0 |
| 5407 Beckner Rd. Trips | 0 | 0 | 17 | 0 | 0 | 0 | 27 | 40 | 28 | 0 | 8 | 0 |
| Subtotal (PM Peak) - Projects Above - | 0 | 22 | 17 | 3 | 23 | 19 | 27 | 63 | 44 | 24 | 18 | 0 |

2035
**NO BUILD**

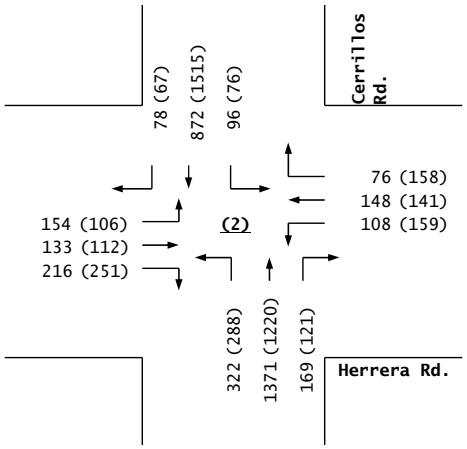


**Trips**

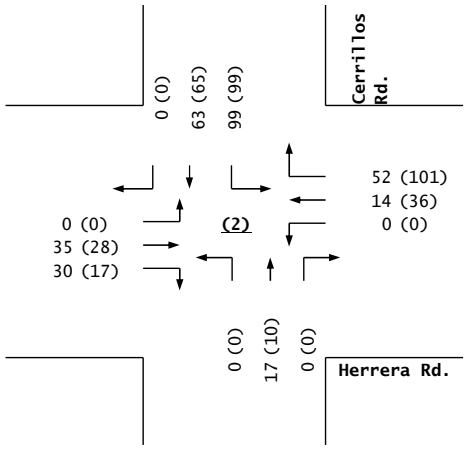


2035
**BUILD**

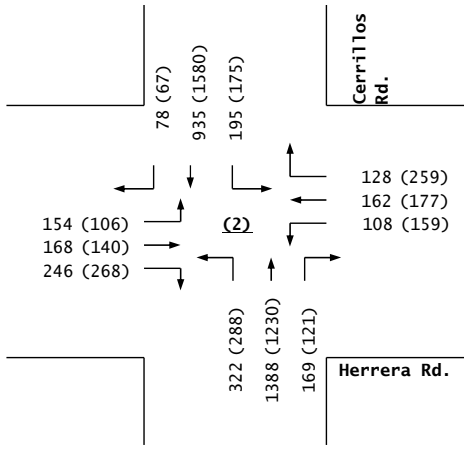


**Herrera Rd. / Cerrillos Rd.**

# *Las Soleras, Tracts 18A & 18B*

Projected Turning Movements Worksheet

***Beckner Rd. / Richards Ave.***

**INTERSECTION:** E-W Street: **Beckner Rd.** (3)

N-S Street: **Richards Ave.**

Year of Existing Counts 2022

Horizon Year **2035**

**Growth Rates** **2.00%** **2.00%** **2.00%** **2.00%**

| | Eastbound (Beckner Rd.) | | | Westbound (Beckner Rd.) | | | Northbound (Richards Ave.) | | | Southbound (Richards Ave.) | | |
|---|---|---|---|---|---|---|---|---|---|---|---|---|
| | Left | Thru | Right | Left | Thru | Right | Left | Thru | Right | Left | Thru | Right |
| Existing Volumes | 65 | 20 | 62 | 6 | 8 | 95 | 50 | 347 | 22 | 90 | 327 | 79 |
| Background Traffic Growth | 17 | 5 | 16 | 2 | 2 | 25 | 13 | 90 | 6 | 23 | 85 | 21 |
| *Subtotal* | 82 | 25 | 78 | 8 | 10 | 120 | 63 | 437 | 28 | 113 | 412 | 100 |
| Medical Office Buiding Trips | 12 | 5 | 9 | 0 | 9 | 0 | 23 | 0 | 0 | 0 | 0 | 35 |
| Vista de la Sierra Trips | 20 | 1 | 9 | 0 | 1 | 0 | 2 | 0 | 0 | 0 | 0 | 4 |
| Other Developments (See Below) | 67 | 5 | 30 | 0 | 4 | 0 | 33 | 0 | 0 | 0 | 0 | 68 |
| ***Subtotal (NO BUILD - A.M.)*** | ***181*** | ***36*** | ***126*** | ***8*** | ***24*** | ***120*** | ***121*** | ***437*** | ***28*** | ***113*** | ***412*** | ***207*** |
| *Percent Residential Trips Generated(Entering)* | *0.00%* | *0.00%* | *0.00%* | *0.00%* | ***1.00%*** | *0.00%* | ***4.00%*** | *0.00%* | *0.00%* | *0.00%* | *0.00%* | ***17.00%*** |
| *Percent Residential Trips Generated(Exiting)* | ***17.00%*** | ***1.00%*** | ***4.00%*** | *0.00%* | *0.00%* | *0.00%* | *0.00%* | *0.00%* | *0.00%* | *0.00%* | *0.00%* | *0.00%* |
| *Percent Commercial Trips Generated(Entering)* | *0.00%* | *0.00%* | *0.00%* | *0.00%* | ***1.00%*** | *0.00%* | ***9.00%*** | *0.00%* | *0.00%* | *0.00%* | *0.00%* | ***12.00%*** |
| *Percent Commercial Trips Generated(Exiting)* | ***12.00%*** | ***1.00%*** | ***9.00%*** | *0.00%* | *0.00%* | *0.00%* | *0.00%* | *0.00%* | *0.00%* | *0.00%* | *0.00%* | *0.00%* |
| *Percent Office Trips Generated(Entering)* | *0.00%* | *0.00%* | *0.00%* | *0.00%* | ***1.00%*** | *0.00%* | ***4.00%*** | *0.00%* | *0.00%* | *0.00%* | *0.00%* | ***10.00%*** |
| *Percent Office Trips Generated(Exiting)* | ***10.00%*** | ***1.00%*** | ***4.00%*** | *0.00%* | *0.00%* | *0.00%* | *0.00%* | *0.00%* | *0.00%* | *0.00%* | *0.00%* | *0.00%* |
| Total Trips Generated | 36 | 2 | 15 | 0 | 3 | 0 | 17 | 0 | 0 | 0 | 0 | 36 |
| **Total AM Peak Hour BUILD Volumes** | **217** | **38** | **141** | **8** | **27** | **120** | **138** | **437** | **28** | **113** | **412** | **243** |

| | Eastbound (Beckner Rd.) | | | Westbound (Beckner Rd.) | | | Northbound (Richards Ave.) | | | Southbound (Richards Ave.) | | |
|---|---|---|---|---|---|---|---|---|---|---|---|---|
| | Left | Thru | Right | Left | Thru | Right | Left | Thru | Right | Left | Thru | Right |
| Existing Volumes | 74 | 3 | 61 | 0 | 2 | 4 | 40 | 318 | 0 | 9 | 350 | 94 |
| Background Traffic Growth | 19 | 1 | 16 | 0 | 1 | 1 | 10 | 83 | 0 | 2 | 91 | 24 |
| *Subtotal* | 93 | 4 | 77 | 0 | 3 | 5 | 50 | 401 | 0 | 11 | 441 | 118 |
| Medical Office Buiding Trips | 47 | 1 | 18 | 0 | 1 | 0 | 3 | 0 | 0 | 0 | 0 | 26 |
| Vista de la Sierra Trips | 7 | 1 | 3 | 0 | 1 | 0 | 1 | 0 | 0 | 0 | 0 | 1 |
| Other Developments (See Below) | 46 | 4 | 21 | 0 | 5 | 0 | 79 | 0 | 0 | 0 | 0 | 150 |
| ***Subtotal (NO BUILD - P.M.)*** | ***193*** | ***10*** | ***119*** | ***0*** | ***10*** | ***5*** | ***133*** | ***401*** | ***0*** | ***11*** | ***441*** | ***295*** |
| *Percent Residential Trips Generated(Entering)* | *0.00%* | *0.00%* | *0.00%* | *0.00%* | ***1.00%*** | *0.00%* | ***4.00%*** | *0.00%* | *0.00%* | *0.00%* | *0.00%* | ***17.00%*** |
| *Percent Residential Trips Generated(Exiting)* | ***17.00%*** | ***1.00%*** | ***4.00%*** | *0.00%* | *0.00%* | *0.00%* | *0.00%* | *0.00%* | *0.00%* | *0.00%* | *0.00%* | *0.00%* |
| *Percent Commercial Trips Generated(Entering)* | *0.00%* | *0.00%* | *0.00%* | *0.00%* | ***1.00%*** | *0.00%* | ***9.00%*** | *0.00%* | *0.00%* | *0.00%* | *0.00%* | ***12.00%*** |
| *Percent Commercial Trips Generated(Exiting)* | ***12.00%*** | ***1.00%*** | ***9.00%*** | *0.00%* | *0.00%* | *0.00%* | *0.00%* | *0.00%* | *0.00%* | *0.00%* | *0.00%* | *0.00%* |
| *Percent Office Trips Generated(Entering)* | *0.00%* | *0.00%* | *0.00%* | *0.00%* | ***1.00%*** | *0.00%* | ***4.00%*** | *0.00%* | *0.00%* | *0.00%* | *0.00%* | ***10.00%*** |
| *Percent Office Trips Generated(Exiting)* | ***10.00%*** | ***1.00%*** | ***4.00%*** | *0.00%* | *0.00%* | *0.00%* | *0.00%* | *0.00%* | *0.00%* | *0.00%* | *0.00%* | *0.00%* |
| Total Trips Generated | 47 | 3 | 17 | 0 | 3 | 0 | 15 | 0 | 0 | 0 | 0 | 46 |
| **Total PM Peak Hour BUILD Volumes** | **240** | **13** | **136** | **0** | **13** | **5** | **148** | **401** | **0** | **11** | **441** | **341** |

| | Entering | Exiting | | |
|---|---|---|---|---|
| Number of Residential Trips Generated | **126** | **44** | A.M. | 100% Residential Development |
| | **177** | **105** | P.M. | |
| Number of Commercial Trips Generated | **94** | **87** | A.M. | 100% Commercial Development |
| | **49** | **49** | P.M. | |
| Number of Office Trips Generated | **175** | **46** | A.M. | 100% Office Development |
| | **98** | **231** | P.M. | |

AM Peak - Other Developments

| | | | | | | | | | | | | |
|---|---|---|---|---|---|---|---|---|---|---|---|---|
| Cielo Apts. Trips | 10 | 1 | 7 | 0 | 1 | 0 | 1 | 0 | 0 | 0 | 0 | 4 |
| Village at Las Soleras Trip | 0 | 0 | 0 | 0 | 0 | 0 | 0 | 0 | 0 | 0 | 0 | 0 |
| Cavan Development Trips | 6 | 0 | 3 | 0 | 1 | 0 | 1 | 0 | 0 | 0 | 0 | 2 |
| 5201 Beckner Rd. Trips | 25 | 1 | 14 | 0 | 1 | 0 | 5 | 0 | 0 | 0 | 0 | 10 |
| Hevenly Santa Fe Trips | 24 | 2 | 5 | 0 | 1 | 0 | 2 | 0 | 0 | 0 | 0 | 8 |
| Presbyterian Medical Offices | 2 | 1 | 1 | 0 | 0 | 0 | 3 | 0 | 0 | 0 | 0 | 4 |
| 5407 Beckner Rd. Trips | 0 | 0 | 0 | 0 | 0 | 0 | 21 | 0 | 0 | 0 | 0 | 40 |
| Subtotal (AM Peak) - Projects Above - | 67 | 5 | 30 | 0 | 4 | 0 | 33 | 0 | 0 | 0 | 0 | 68 |

PM Peak - Other Developments

| | | | | | | | | | | | | |
|---|---|---|---|---|---|---|---|---|---|---|---|---|
| Cielo Apts. Trips | 7 | 1 | 4 | 0 | 1 | 0 | 4 | 0 | 0 | 0 | 0 | 8 |
| Village at Las Soleras Trip | 0 | 0 | 0 | 0 | 0 | 0 | 0 | 0 | 0 | 0 | 0 | 0 |
| Cavan Development Trips | 4 | 0 | 2 | 0 | 1 | 0 | 3 | 0 | 0 | 0 | 0 | 8 |
| 5201 Beckner Rd. Trips | 15 | 1 | 9 | 0 | 1 | 0 | 21 | 0 | 0 | 0 | 0 | 25 |
| Hevenly Santa Fe Trips | 16 | 1 | 4 | 0 | 2 | 0 | 6 | 0 | 0 | 0 | 0 | 27 |
| Presbyterian Medical Offices | 4 | 1 | 2 | 0 | 0 | 0 | 1 | 0 | 0 | 0 | 0 | 2 |
| 5407 Beckner Rd. Trips | 0 | 0 | 0 | 0 | 0 | 0 | 44 | 0 | 0 | 0 | 0 | 80 |
| Subtotal (PM Peak) - Projects Above - | 46 | 4 | 21 | 0 | 5 | 0 | 79 | 0 | 0 | 0 | 0 | 150 |

2035
**NO BUILD**

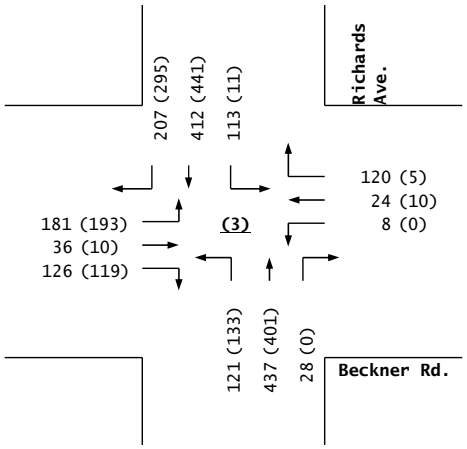


**Trips**

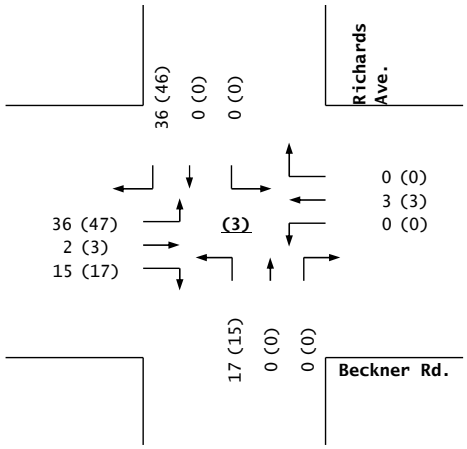


2035
**BUILD**

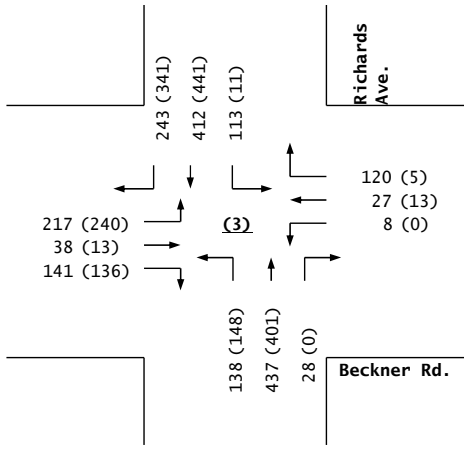


**Beckner Rd. / Richards Ave.**

# *Las Soleras, Tracts 18A & 18B*

Projected Turning Movements Worksheet

***Beckner Rd. / Wellness Way***

**INTERSECTION:** E-W Street: **Beckner Rd.** (4)
N-S Street: **Wellness Way**

Year of Existing Counts 2022
Horizon Year **2035**
**Growth Rates** **2.00%** **2.00%** **2.00%** **2.00%**

| | Eastbound (Beckner Rd.) | | | Westbound (Beckner Rd.) | | | Northbound (Wellness Way) | | | Southbound (Wellness Way) | | |
|---|---|---|---|---|---|---|---|---|---|---|---|---|
| | Left | Thru | Right | Left | Thru | Right | Left | Thru | Right | Left | Thru | Right |
| Existing Volumes | 26 | 136 | 0 | 0 | 71 | 61 | 0 | 0 | 0 | 43 | 0 | 4 |
| Background Traffic Growth | 7 | 35 | 0 | 0 | 18 | 16 | 0 | 0 | 0 | 11 | 0 | 1 |
| *Subtotal* | 33 | 171 | 0 | 0 | 89 | 77 | 0 | 0 | 0 | 54 | 0 | 5 |
| Medical Office Buiding Trips | 0 | 105 | 0 | 0 | 14 | 5 | 0 | 0 | 0 | 19 | 0 | 0 |
| Vista de la Sierra Trips | 0 | 28 | 0 | 0 | 22 | 0 | 0 | 0 | 0 | 0 | 0 | 0 |
| Other Developments (See Below) | 5 | 97 | 0 | 0 | 94 | 31 | 0 | 0 | 0 | 69 | 0 | 52 |
| ***Subtotal (NO BUILD - A.M.)*** | ***38*** | ***401*** | ***0*** | ***0*** | ***219*** | ***113*** | ***0*** | ***0*** | ***0*** | ***142*** | ***0*** | ***57*** |
| *Percent Residential Trips Generated(Entering)* | *0.00%* | ***33.00%*** | *0.00%* | *0.00%* | *0.00%* | *0.00%* | *0.00%* | *0.00%* | *0.00%* | ***36.00%*** | *0.00%* | *0.00%* |
| *Percent Residential Trips Generated(Exiting)* | *0.00%* | *0.00%* | *0.00%* | *0.00%* | ***33.00%*** | ***36.00%*** | *0.00%* | *0.00%* | *0.00%* | *0.00%* | *0.00%* | *0.00%* |
| *Percent Commercial Trips Generated(Entering)* | *0.00%* | ***23.00%*** | *0.00%* | *0.00%* | *0.00%* | *0.00%* | *0.00%* | *0.00%* | *0.00%* | ***40.00%*** | *0.00%* | *0.00%* |
| *Percent Commercial Trips Generated(Exiting)* | *0.00%* | *0.00%* | *0.00%* | *0.00%* | ***23.00%*** | ***40.00%*** | *0.00%* | *0.00%* | *0.00%* | *0.00%* | *0.00%* | *0.00%* |
| *Percent Office Trips Generated(Entering)* | *0.00%* | ***37.00%*** | *0.00%* | *0.00%* | *0.00%* | *0.00%* | *0.00%* | *0.00%* | *0.00%* | ***43.00%*** | *0.00%* | *0.00%* |
| *Percent Office Trips Generated(Exiting)* | *0.00%* | *0.00%* | *0.00%* | *0.00%* | ***37.00%*** | ***43.00%*** | *0.00%* | *0.00%* | *0.00%* | *0.00%* | *0.00%* | *0.00%* |
| Total Trips Generated | 0 | 102 | 0 | 0 | 79 | 100 | 0 | 0 | 0 | 129 | 0 | 0 |
| **Total AM Peak Hour BUILD Volumes** | **38** | **503** | **0** | **0** | **298** | **213** | **0** | **0** | **0** | **271** | **0** | **57** |

| | Eastbound (Beckner Rd.) | | | Westbound (Beckner Rd.) | | | Northbound (Wellness Way) | | | Southbound (Wellness Way) | | |
|---|---|---|---|---|---|---|---|---|---|---|---|---|
| | Left | Thru | Right | Left | Thru | Right | Left | Thru | Right | Left | Thru | Right |
| Existing Volumes | 17 | 66 | 0 | 0 | 86 | 51 | 0 | 0 | 0 | 59 | 0 | 100 |
| Background Traffic Growth | 4 | 17 | 0 | 0 | 22 | 13 | 0 | 0 | 0 | 15 | 0 | 26 |
| *Subtotal* | 21 | 83 | 0 | 0 | 108 | 64 | 0 | 0 | 0 | 74 | 0 | 126 |
| Medical Office Buiding Trips | 0 | 41 | 0 | 0 | 60 | 42 | 0 | 0 | 0 | 9 | 0 | 0 |
| Vista de la Sierra Trips | 0 | 17 | 0 | 0 | 12 | 0 | 0 | 0 | 0 | 0 | 0 | 0 |
| Other Developments (See Below) | 17 | 96 | 0 | 0 | 128 | 74 | 0 | 0 | 0 | 48 | 0 | 44 |
| ***Subtotal (NO BUILD - P.M.)*** | ***38*** | ***237*** | ***0*** | ***0*** | ***308*** | ***180*** | ***0*** | ***0*** | ***0*** | ***131*** | ***0*** | ***170*** |
| *Percent Residential Trips Generated(Entering)* | *0.00%* | ***33.00%*** | *0.00%* | *0.00%* | *0.00%* | *0.00%* | *0.00%* | *0.00%* | *0.00%* | ***36.00%*** | *0.00%* | *0.00%* |
| *Percent Residential Trips Generated(Exiting)* | *0.00%* | *0.00%* | *0.00%* | *0.00%* | ***33.00%*** | ***36.00%*** | *0.00%* | *0.00%* | *0.00%* | *0.00%* | *0.00%* | *0.00%* |
| *Percent Commercial Trips Generated(Entering)* | *0.00%* | ***23.00%*** | *0.00%* | *0.00%* | *0.00%* | *0.00%* | *0.00%* | *0.00%* | *0.00%* | ***40.00%*** | *0.00%* | *0.00%* |
| *Percent Commercial Trips Generated(Exiting)* | *0.00%* | *0.00%* | *0.00%* | *0.00%* | ***23.00%*** | ***40.00%*** | *0.00%* | *0.00%* | *0.00%* | *0.00%* | *0.00%* | *0.00%* |
| *Percent Office Trips Generated(Entering)* | *0.00%* | ***37.00%*** | *0.00%* | *0.00%* | *0.00%* | *0.00%* | *0.00%* | *0.00%* | *0.00%* | ***43.00%*** | *0.00%* | *0.00%* |
| *Percent Office Trips Generated(Exiting)* | *0.00%* | *0.00%* | *0.00%* | *0.00%* | ***37.00%*** | ***43.00%*** | *0.00%* | *0.00%* | *0.00%* | *0.00%* | *0.00%* | *0.00%* |
| Total Trips Generated | 0 | 105 | 0 | 0 | 131 | 157 | 0 | 0 | 0 | 126 | 0 | 0 |
| **Total PM Peak Hour BUILD Volumes** | **38** | **342** | **0** | **0** | **439** | **337** | **0** | **0** | **0** | **257** | **0** | **170** |

| | Entering | Exiting | | |
|---|---|---|---|---|
| Number of Residential Trips Generated | **126** | **44** | A.M. | 100% Residential Development |
| | **177** | **105** | P.M. | |
| Number of Commercial Trips Generated | **94** | **87** | A.M. | 100% Commercial Development |
| | **49** | **49** | P.M. | |
| Number of Office Trips Generated | **175** | **46** | A.M. | 100% Office Development |
| | **98** | **231** | P.M. | |

AM Peak - Other Developments

| | | | | | | | | | | | | |
|---|---|---|---|---|---|---|---|---|---|---|---|---|
| Cielo Apts. Trips | 0 | 14 | 0 | 0 | 5 | 0 | 0 | 0 | 0 | 0 | 0 | 0 |
| Village at Las Soleras Trip | 0 | 0 | 0 | 0 | 0 | 0 | 0 | 0 | 0 | 0 | 0 | 0 |
| Cavan Development Trips | 0 | 9 | 0 | 0 | 3 | 0 | 0 | 0 | 0 | 0 | 0 | 0 |
| 5201 Beckner Rd. Trips | 5 | 0 | 0 | 0 | 0 | 15 | 0 | 0 | 0 | 49 | 0 | 18 |
| Hevenly Santa Fe Trips | 0 | 8 | 0 | 0 | 25 | 12 | 0 | 0 | 0 | 4 | 0 | 0 |
| Presbyterian Medical Offices | 0 | 36 | 0 | 0 | 9 | 4 | 0 | 0 | 0 | 16 | 0 | 0 |
| 5407 Beckner Rd. Trips | 0 | 30 | 0 | 0 | 52 | 0 | 0 | 0 | 0 | 0 | 0 | 34 |
| Subtotal (AM Peak) - Projects Above - | 5 | 97 | 0 | 0 | 94 | 31 | 0 | 0 | 0 | 69 | 0 | 52 |

PM Peak - Other Developments

| | | | | | | | | | | | | |
|---|---|---|---|---|---|---|---|---|---|---|---|---|
| Cielo Apts. Trips | 0 | 11 | 0 | 0 | 12 | 0 | 0 | 0 | 0 | 0 | 0 | 0 |
| Village at Las Soleras Trip | 0 | 0 | 0 | 0 | 0 | 0 | 0 | 0 | 0 | 0 | 0 | 0 |
| Cavan Development Trips | 0 | 11 | 0 | 0 | 6 | 0 | 0 | 0 | 0 | 0 | 0 | 0 |
| 5201 Beckner Rd. Trips | 17 | 0 | 0 | 0 | 0 | 46 | 0 | 0 | 0 | 27 | 0 | 10 |
| Hevenly Santa Fe Trips | 0 | 28 | 0 | 0 | 16 | 8 | 0 | 0 | 0 | 13 | 0 | 0 |
| Presbyterian Medical Offices | 0 | 16 | 0 | 0 | 44 | 20 | 0 | 0 | 0 | 8 | 0 | 0 |
| 5407 Beckner Rd. Trips | 0 | 30 | 0 | 0 | 50 | 0 | 0 | 0 | 0 | 0 | 0 | 34 |
| Subtotal (PM Peak) - Projects Above - | 17 | 96 | 0 | 0 | 128 | 74 | 0 | 0 | 0 | 48 | 0 | 44 |

2035
**NO BUILD**

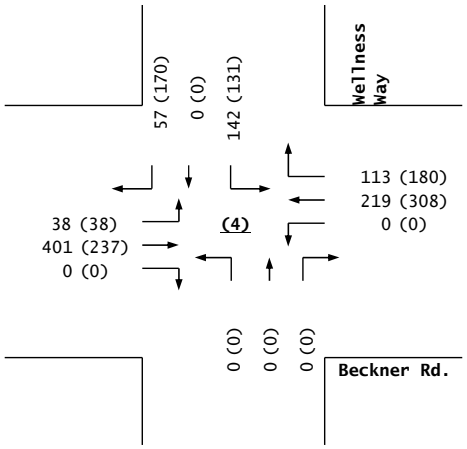


**Trips**

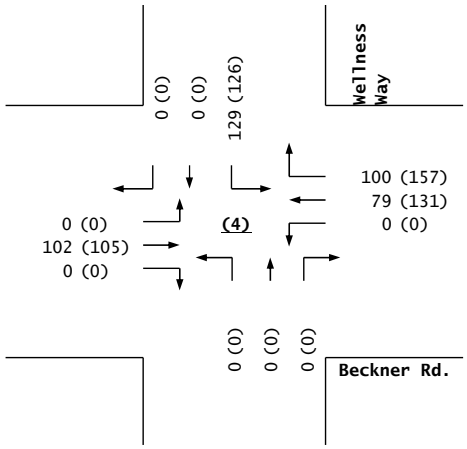


2035
**BUILD**

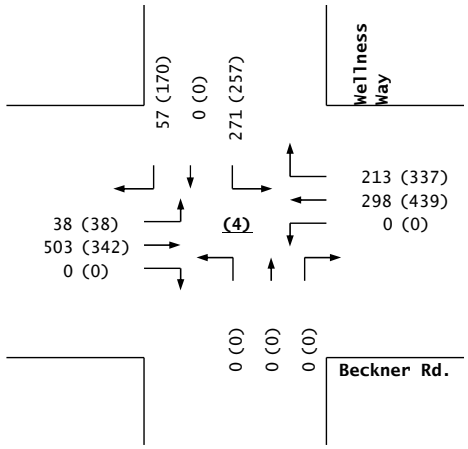


**Beckner Rd. / Wellness Way**

# *Las Soleras, Tracts 18A & 18B*

Projected Turning Movements Worksheet

***Beckner Rd. / Las Soleras Dr.***

**INTERSECTION:** E-W Street: **Beckner Rd.** (5)

N-S Street: **Las Soleras Dr.**

Year of Existing Counts 2022

Horizon Year **2035**

**Growth Rates** **2.00%** **2.00%** **2.00%** **2.00%**

| | Eastbound (Beckner Rd.) | | | Westbound (Beckner Rd.) | | | Northbound (Las Soleras Dr.) | | | Southbound (Las Soleras Dr.) | | |
|---|---|---|---|---|---|---|---|---|---|---|---|---|
| | Left | Thru | Right | Left* | Thru | Right | Left | Thru | Right | Left | Thru | Right |
| Existing Volumes | 4 | 150 | 0 | 0 | 140 | 1 | 0 | 0 | 0 | 1 | 0 | 2 |
| Background Traffic Growth | 1 | 39 | 0 | 0 | 36 | 0 | 0 | 0 | 0 | 0 | 0 | 1 |
| *Subtotal* | 5 | 189 | 0 | 0 | 176 | 1 | 0 | 0 | 0 | 1 | 0 | 3 |
| Medical Office Buiding Trips | 0 | 105 | 0 | 0 | 14 | 0 | 0 | 0 | 0 | 0 | 0 | 0 |
| Vista de la Sierra Trips | 0 | 28 | 0 | 0 | 22 | 0 | 0 | 0 | 0 | 0 | 0 | 0 |
| Other Developments (See Below) | 3 | 112 | 9 | 29 | 103 | 0 | 16 | 0 | 4 | 7 | 44 | 8 |
| ***Subtotal (NO BUILD - A.M.)*** | ***8*** | ***434*** | ***9*** | ***29*** | ***315*** | ***1*** | ***16*** | ***0*** | ***4*** | ***8*** | ***44*** | ***11*** |
| *Percent Residential Trips Generated(Entering)* | *0.00%* | ***69.00%*** | *0.00%* | *0.00%* | *0.00%* | *0.00%* | *0.00%* | *0.00%* | *0.00%* | *0.00%* | *0.00%* | *0.00%* |
| *Percent Residential Trips Generated(Exiting)* | *0.00%* | *0.00%* | *0.00%* | *0.00%* | ***69.00%*** | *0.00%* | *0.00%* | *0.00%* | *0.00%* | *0.00%* | *0.00%* | *0.00%* |
| *Percent Commercial Trips Generated(Entering)* | *0.00%* | ***63.00%*** | *0.00%* | *0.00%* | *0.00%* | *0.00%* | *0.00%* | *0.00%* | *0.00%* | ***1.00%*** | *0.00%* | *0.00%* |
| *Percent Commercial Trips Generated(Exiting)* | *0.00%* | *0.00%* | *0.00%* | *0.00%* | ***63.00%*** | ***1.00%*** | *0.00%* | *0.00%* | *0.00%* | *0.00%* | *0.00%* | *0.00%* |
| *Percent Office Trips Generated(Entering)* | *0.00%* | ***80.00%*** | *0.00%* | *0.00%* | *0.00%* | *0.00%* | *0.00%* | *0.00%* | *0.00%* | *0.00%* | *0.00%* | *0.00%* |
| *Percent Office Trips Generated(Exiting)* | *0.00%* | *0.00%* | *0.00%* | *0.00%* | ***60.00%*** | *0.00%* | *0.00%* | *0.00%* | *0.00%* | *0.00%* | *0.00%* | *0.00%* |
| Total Trips Generated | 0 | 229 | 0 | 0 | 170 | 1 | 0 | 0 | 0 | 1 | 0 | 0 |
| **Total AM Peak Hour BUILD Volumes** | **8** | **663** | **9** | **29** | **485** | **2** | **16** | **0** | **4** | **9** | **44** | **11** |

*** - 4 LT / 25 U-TURNS**

| | Eastbound (Beckner Rd.) | | | Westbound (Beckner Rd.) | | | Northbound (Las Soleras Dr.) | | | Southbound (Las Soleras Dr.) | | |
|---|---|---|---|---|---|---|---|---|---|---|---|---|
| | Left | Thru | Right | Left* | Thru | Right | Left | Thru | Right | Left | Thru | Right |
| Existing Volumes | 7 | 130 | 0 | 0 | 95 | 10 | 0 | 0 | 0 | 7 | 0 | 5 |
| Background Traffic Growth | 2 | 34 | 0 | 0 | 25 | 3 | 0 | 0 | 0 | 2 | 0 | 1 |
| *Subtotal* | 9 | 164 | 0 | 0 | 120 | 13 | 0 | 0 | 0 | 9 | 0 | 6 |
| Medical Office Buiding Trips | 0 | 41 | 0 | 0 | 102 | 0 | 0 | 0 | 0 | 0 | 0 | 0 |
| Vista de la Sierra Trips | 0 | 17 | 0 | 0 | 12 | 0 | 0 | 0 | 0 | 0 | 0 | 0 |
| Other Developments (See Below) | 9 | 106 | 44 | 20 | 139 | 0 | 60 | 0 | 12 | 4 | 20 | 5 |
| ***Subtotal (NO BUILD - P.M.)*** | ***18*** | ***328*** | ***44*** | ***20*** | ***373*** | ***13*** | ***60*** | ***0*** | ***12*** | ***13*** | ***20*** | ***11*** |
| *Percent Residential Trips Generated(Entering)* | *0.00%* | ***69.00%*** | *0.00%* | *0.00%* | *0.00%* | *0.00%* | *0.00%* | *0.00%* | *0.00%* | *0.00%* | *0.00%* | *0.00%* |
| *Percent Residential Trips Generated(Exiting)* | *0.00%* | *0.00%* | *0.00%* | *0.00%* | ***69.00%*** | *0.00%* | *0.00%* | *0.00%* | *0.00%* | *0.00%* | *0.00%* | *0.00%* |
| *Percent Commercial Trips Generated(Entering)* | *0.00%* | ***63.00%*** | *0.00%* | *0.00%* | *0.00%* | *0.00%* | *0.00%* | *0.00%* | *0.00%* | ***1.00%*** | *0.00%* | *0.00%* |
| *Percent Commercial Trips Generated(Exiting)* | *0.00%* | *0.00%* | *0.00%* | *0.00%* | ***63.00%*** | ***1.00%*** | *0.00%* | *0.00%* | *0.00%* | *0.00%* | *0.00%* | *0.00%* |
| *Percent Office Trips Generated(Entering)* | *0.00%* | ***80.00%*** | *0.00%* | *0.00%* | *0.00%* | *0.00%* | *0.00%* | *0.00%* | *0.00%* | *0.00%* | *0.00%* | *0.00%* |
| *Percent Office Trips Generated(Exiting)* | *0.00%* | *0.00%* | *0.00%* | *0.00%* | ***60.00%*** | *0.00%* | *0.00%* | *0.00%* | *0.00%* | *0.00%* | *0.00%* | *0.00%* |
| Total Trips Generated | 0 | 231 | 0 | 0 | 242 | 0 | 0 | 0 | 0 | 0 | 0 | 0 |
| **Total PM Peak Hour BUILD Volumes** | **18** | **559** | **44** | **20** | **615** | **13** | **60** | **0** | **12** | **13** | **20** | **11** |

*** - 4 LT / 16 U-TURNS**

| | Entering | Exiting | | |
|---|---|---|---|---|
| Number of Residential Trips Generated | **126** | **44** | A.M. | 100% Residential Development |
| | **177** | **105** | P.M. | |
| Number of Commercial Trips Generated | **94** | **87** | A.M. | 100% Commercial Development |
| | **49** | **49** | P.M. | |
| Number of Office Trips Generated | **175** | **46** | A.M. | 100% Office Development |
| | **98** | **231** | P.M. | |

AM Peak - Other Developments

| | | | | | | | | | | | | |
|---|---|---|---|---|---|---|---|---|---|---|---|---|
| Cielo Apts. Trips | 0 | 14 | 0 | 0 | 5 | 0 | 0 | 0 | 0 | 0 | 0 | 0 |
| Village at Las Soleras Trip | 0 | 0 | 0 | 0 | 0 | 0 | 0 | 0 | 0 | 0 | 0 | 0 |
| Cavan Development Trips | 0 | 9 | 0 | 0 | 3 | 0 | 0 | 0 | 0 | 0 | 0 | 0 |
| 5201 Beckner Rd. Trips | 0 | 49 | 0 | 0 | 15 | 0 | 0 | 0 | 0 | 0 | 0 | 0 |
| Hevenly Santa Fe Trips | 3 | 10 | 0 | 25 | 28 | 0 | 0 | 0 | 0 | 7 | 0 | 8 |
| Presbyterian Medical Offices | 0 | 0 | 9 | 4 | 0 | 0 | 16 | 0 | 4 | 0 | 44 | 0 |
| 5407 Beckner Rd. Trips | 0 | 30 | 0 | 0 | 52 | 0 | 0 | 0 | 0 | 0 | 0 | 0 |
| Subtotal (AM Peak) - Projects Above - | 3 | 112 | 9 | 29 | 103 | 0 | 16 | 0 | 4 | 7 | 44 | 8 |

PM Peak - Other Developments

| | | | | | | | | | | | | |
|---|---|---|---|---|---|---|---|---|---|---|---|---|
| Cielo Apts. Trips | 0 | 11 | 0 | 0 | 12 | 0 | 0 | 0 | 0 | 0 | 0 | 0 |
| Village at Las Soleras Trip | 0 | 0 | 0 | 0 | 0 | 0 | 0 | 0 | 0 | 0 | 0 | 0 |
| Cavan Development Trips | 0 | 6 | 0 | 0 | 12 | 0 | 0 | 0 | 0 | 0 | 0 | 0 |
| 5201 Beckner Rd. Trips | 0 | 27 | 0 | 0 | 46 | 0 | 0 | 0 | 0 | 0 | 0 | 0 |
| Hevenly Santa Fe Trips | 9 | 32 | 0 | 16 | 19 | 0 | 0 | 0 | 0 | 4 | 0 | 5 |
| Presbyterian Medical Offices | 0 | 0 | 44 | 4 | 0 | 0 | 60 | 0 | 12 | 0 | 20 | 0 |
| 5407 Beckner Rd. Trips | 0 | 30 | 0 | 0 | 50 | 0 | 0 | 0 | 0 | 0 | 0 | 0 |
| Subtotal (PM Peak) - Projects Above - | 9 | 106 | 44 | 20 | 139 | 0 | 60 | 0 | 12 | 4 | 20 | 5 |

2035
**NO BUILD**

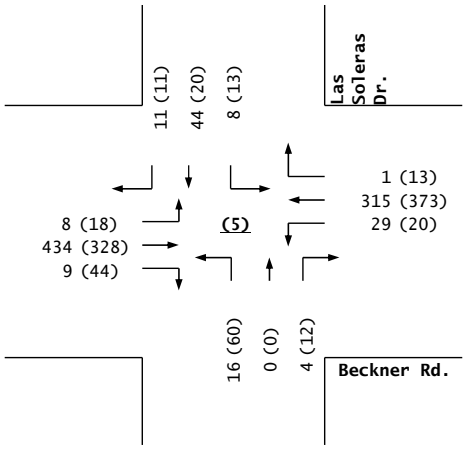


**Trips**

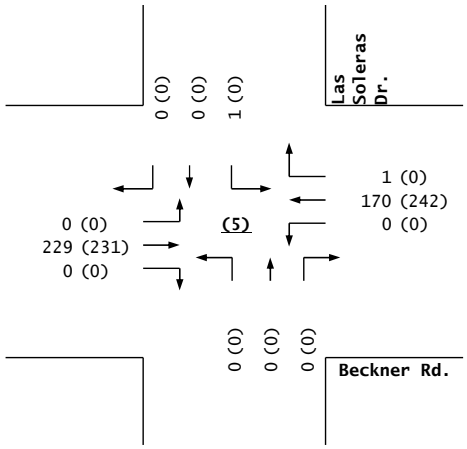


2035
**BUILD**

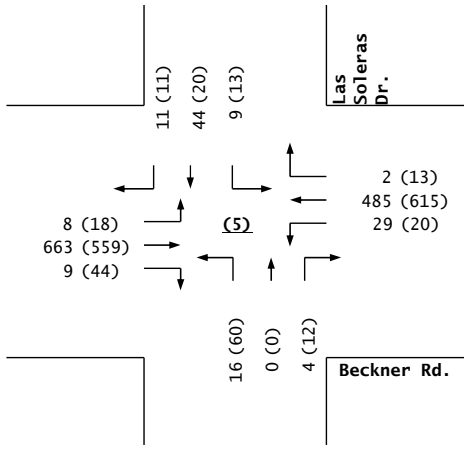


**Beckner Rd. / Las Soleras Dr.**

# *Las Soleras, Tracts 18A & 18B*

Projected Turning Movements Worksheet

***Beckner Rd. / Rail Runner Rd.***

**INTERSECTION:** E-W Street: **Beckner Rd.** (6)

N-S Street: **Rail Runner Rd.**

Year of Existing Counts 2022

Horizon Year **2035**

| **Growth Rates** | **2.00%** | | | **2.00%** | | | **2.00%** | | | **2.00%** | | |
|---|---|---|---|---|---|---|---|---|---|---|---|---|
| | **Eastbound (Beckner Rd.)** | | | **Westbound (Beckner Rd.)** | | | **Northbound (Rail Runner Rd.)** | | | **Southbound (Rail Runner Rd.)** | | |
| | Left | Thru | Right | Left | Thru | Right | Left | Thru | Right | Left | Thru | Right |
| Existing Volumes | 27 | 122 | 0 | 0 | 110 | 60 | 0 | 0 | 0 | 17 | 0 | 29 |
| Background Traffic Growth | 7 | 32 | 0 | 0 | 29 | 16 | 0 | 0 | 0 | 4 | 0 | 8 |
| *Subtotal* | 34 | 154 | 0 | 0 | 139 | 76 | 0 | 0 | 0 | 21 | 0 | 37 |
| Medical Office Buiding Trips | 0 | 105 | 0 | 0 | 14 | 0 | 0 | 0 | 0 | 0 | 0 | 0 |
| Vista de la Sierra Trips | 0 | 28 | 0 | 0 | 22 | 0 | 0 | 0 | 0 | 0 | 0 | 0 |
| Other Developments (See Below) | 21 | 91 | 0 | 0 | 84 | 6 | 0 | 0 | 0 | 17 | 0 | 18 |
| ***Subtotal (NO BUILD - A.M.)*** | ***55*** | ***378*** | ***0*** | ***0*** | ***259*** | ***82*** | ***0*** | ***0*** | ***0*** | ***38*** | ***0*** | ***55*** |
| *Percent Residential Trips Generated(Entering)* | *0.00%* | ***69.00%*** | *0.00%* | *0.00%* | *0.00%* | *0.00%* | *0.00%* | *0.00%* | *0.00%* | ***8.00%*** | *0.00%* | *0.00%* |
| *Percent Residential Trips Generated(Exiting)* | *0.00%* | *0.00%* | *0.00%* | *0.00%* | ***69.00%*** | ***8.00%*** | *0.00%* | *0.00%* | *0.00%* | *0.00%* | *0.00%* | *0.00%* |
| *Percent Commercial Trips Generated(Entering)* | *0.00%* | ***64.00%*** | *0.00%* | *0.00%* | *0.00%* | *0.00%* | *0.00%* | *0.00%* | *0.00%* | ***13.00%*** | *0.00%* | *0.00%* |
| *Percent Commercial Trips Generated(Exiting)* | *0.00%* | *0.00%* | *0.00%* | *0.00%* | ***64.00%*** | ***13.00%*** | *0.00%* | *0.00%* | *0.00%* | *0.00%* | *0.00%* | *0.00%* |
| *Percent Office Trips Generated(Entering)* | *0.00%* | ***80.00%*** | *0.00%* | *0.00%* | *0.00%* | *0.00%* | *0.00%* | *0.00%* | *0.00%* | ***4.00%*** | *0.00%* | *0.00%* |
| *Percent Office Trips Generated(Exiting)* | *0.00%* | *0.00%* | *0.00%* | *0.00%* | ***80.00%*** | ***4.00%*** | *0.00%* | *0.00%* | *0.00%* | *0.00%* | *0.00%* | *0.00%* |
| Total Trips Generated | 0 | 230 | 0 | 0 | 180 | 23 | 0 | 0 | 0 | 23 | 0 | 0 |
| **Total AM Peak Hour BUILD Volumes** | **55** | **608** | **0** | **0** | **439** | **105** | **0** | **0** | **0** | **61** | **0** | **55** |

| | **Eastbound (Beckner Rd.)** | | | **Westbound (Beckner Rd.)** | | | **Northbound (Rail Runner Rd.)** | | | **Southbound (Rail Runner Rd.)** | | |
|---|---|---|---|---|---|---|---|---|---|---|---|---|
| | Left | Thru | Right | Left | Thru | Right | Left | Thru | Right | Left | Thru | Right |
| Existing Volumes | 17 | 122 | 0 | 0 | 90 | 30 | 0 | 0 | 0 | 21 | 0 | 19 |
| Background Traffic Growth | 4 | 32 | 0 | 0 | 23 | 8 | 0 | 0 | 0 | 5 | 0 | 5 |
| *Subtotal* | 21 | 154 | 0 | 0 | 113 | 38 | 0 | 0 | 0 | 26 | 0 | 24 |
| Medical Office Buiding Trips | 0 | 41 | 0 | 0 | 102 | 0 | 0 | 0 | 0 | 0 | 0 | 0 |
| Vista de la Sierra Trips | 0 | 17 | 0 | 0 | 12 | 0 | 0 | 0 | 0 | 0 | 0 | 0 |
| Other Developments (See Below) | 24 | 66 | 0 | 0 | 141 | 19 | 0 | 0 | 0 | 11 | 0 | 27 |
| ***Subtotal (NO BUILD - P.M.)*** | ***45*** | ***278*** | ***0*** | ***0*** | ***368*** | ***57*** | ***0*** | ***0*** | ***0*** | ***37*** | ***0*** | ***51*** |
| *Percent Residential Trips Generated(Entering)* | *0.00%* | ***69.00%*** | *0.00%* | *0.00%* | *0.00%* | *0.00%* | *0.00%* | *0.00%* | *0.00%* | ***8.00%*** | *0.00%* | *0.00%* |
| *Percent Residential Trips Generated(Exiting)* | *0.00%* | *0.00%* | *0.00%* | *0.00%* | ***69.00%*** | ***8.00%*** | *0.00%* | *0.00%* | *0.00%* | *0.00%* | *0.00%* | *0.00%* |
| *Percent Commercial Trips Generated(Entering)* | *0.00%* | ***64.00%*** | *0.00%* | *0.00%* | *0.00%* | *0.00%* | *0.00%* | *0.00%* | *0.00%* | ***13.00%*** | *0.00%* | *0.00%* |
| *Percent Commercial Trips Generated(Exiting)* | *0.00%* | *0.00%* | *0.00%* | *0.00%* | ***64.00%*** | ***13.00%*** | *0.00%* | *0.00%* | *0.00%* | *0.00%* | *0.00%* | *0.00%* |
| *Percent Office Trips Generated(Entering)* | *0.00%* | ***80.00%*** | *0.00%* | *0.00%* | *0.00%* | *0.00%* | *0.00%* | *0.00%* | *0.00%* | ***4.00%*** | *0.00%* | *0.00%* |
| *Percent Office Trips Generated(Exiting)* | *0.00%* | *0.00%* | *0.00%* | *0.00%* | ***80.00%*** | ***4.00%*** | *0.00%* | *0.00%* | *0.00%* | *0.00%* | *0.00%* | *0.00%* |
| Total Trips Generated | 0 | 231 | 0 | 0 | 288 | 23 | 0 | 0 | 0 | 24 | 0 | 0 |
| **Total PM Peak Hour BUILD Volumes** | **45** | **509** | **0** | **0** | **656** | **80** | **0** | **0** | **0** | **61** | **0** | **51** |

| | Entering | Exiting | | |
|---|---|---|---|---|
| Number of Residential Trips Generated | **126** | **44** | A.M. | 100% Residential Development |
| | **177** | **105** | P.M. | |
| Number of Commercial Trips Generated | **94** | **87** | A.M. | 100% Commercial Development |
| | **49** | **49** | P.M. | |
| Number of Office Trips Generated | **175** | **46** | A.M. | 100% Office Development |
| | **98** | **231** | P.M. | |

AM Peak - Other Developments

| | | | | | | | | | | | | |
|---|---|---|---|---|---|---|---|---|---|---|---|---|
| Cielo Apts. Trips | 0 | 14 | 0 | 0 | 5 | 0 | 0 | 0 | 0 | 0 | 0 | 0 |
| Village at Las Soleras Trip | 0 | 0 | 0 | 0 | 0 | 0 | 0 | 0 | 0 | 0 | 0 | 0 |
| Cavan Development Trips | 0 | 9 | 0 | 0 | 3 | 0 | 0 | 0 | 0 | 0 | 0 | 0 |
| 5201 Beckner Rd. Trips | 0 | 49 | 0 | 0 | 15 | 0 | 0 | 0 | 0 | 0 | 0 | 0 |
| Hevenly Santa Fe Trips | 21 | 15 | 0 | 0 | 5 | 6 | 0 | 0 | 0 | 17 | 0 | 18 |
| Presbyterian Medical Offices | 0 | 4 | 0 | 0 | 4 | 0 | 0 | 0 | 0 | 0 | 0 | 0 |
| 5407 Beckner Rd. Trips | 0 | 0 | 0 | 0 | 52 | 0 | 0 | 0 | 0 | 0 | 0 | 0 |
| Subtotal (AM Peak) - Projects Above - | 21 | 91 | 0 | 0 | 84 | 6 | 0 | 0 | 0 | 17 | 0 | 18 |

PM Peak - Other Developments

| | | | | | | | | | | | | |
|---|---|---|---|---|---|---|---|---|---|---|---|---|
| Cielo Apts. Trips | 0 | 11 | 0 | 0 | 12 | 0 | 0 | 0 | 0 | 0 | 0 | 0 |
| Village at Las Soleras Trip | 0 | 0 | 0 | 0 | 0 | 0 | 0 | 0 | 0 | 0 | 0 | 0 |
| Cavan Development Trips | 0 | 6 | 0 | 0 | 12 | 0 | 0 | 0 | 0 | 0 | 0 | 0 |
| 5201 Beckner Rd. Trips | 0 | 27 | 0 | 0 | 46 | 0 | 0 | 0 | 0 | 0 | 0 | 0 |
| Hevenly Santa Fe Trips | 24 | 10 | 0 | 0 | 17 | 19 | 0 | 0 | 0 | 11 | 0 | 27 |
| Presbyterian Medical Offices | 0 | 12 | 0 | 0 | 4 | 0 | 0 | 0 | 0 | 0 | 0 | 0 |
| 5407 Beckner Rd. Trips | 0 | 0 | 0 | 0 | 50 | 0 | 0 | 0 | 0 | 0 | 0 | 0 |
| Subtotal (PM Peak) - Projects Above - | 24 | 66 | 0 | 0 | 141 | 19 | 0 | 0 | 0 | 11 | 0 | 27 |

2035
**NO BUILD**

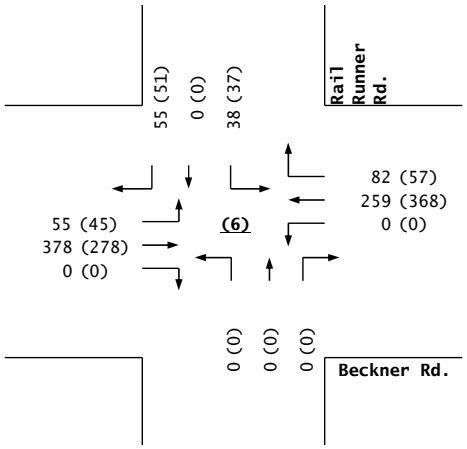


**Trips**

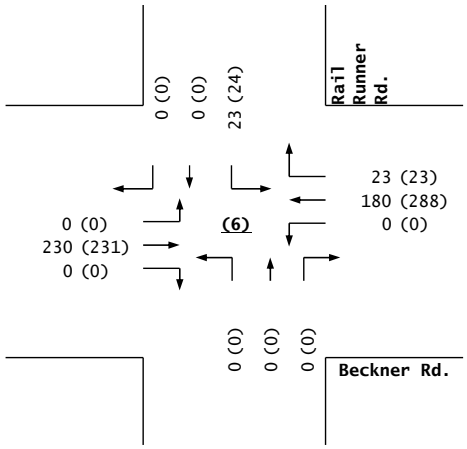


2035
**BUILD**

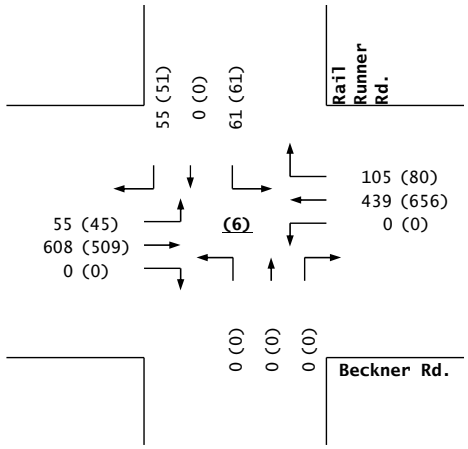


**Beckner Rd. / Rail Runner Rd.**

# *Las Soleras, Tracts 18A & 18B*

Projected Turning Movements Worksheet

***Beckner Rd. / Walking Rain***

**INTERSECTION:** E-W Street: **Beckner Rd.** (7)

N-S Street: **Walking Rain**

Year of Existing Counts 2022

Horizon Year **2035**

| **Growth Rates** | **2.00%** | | | **2.00%** | | | **2.00%** | | | **2.00%** | | |
|---|---|---|---|---|---|---|---|---|---|---|---|---|
| | **Eastbound (Beckner Rd.)** | | | **Westbound (Beckner Rd.)** | | | **Northbound (Walking Rain)** | | | **Southbound (Walking Rain)** | | |
| | Left | Thru | Right | Left | Thru | Right | Left | Thru | Right | Left | Thru | Right |
| Existing Volumes | 18 | 77 | 0 | 0 | 100 | 22 | 0 | 0 | 0 | 44 | 0 | 28 |
| Background Traffic Growth | 5 | 20 | 0 | 0 | 26 | 6 | 0 | 0 | 0 | 11 | 0 | 7 |
| *Subtotal* | 23 | 97 | 0 | 0 | 126 | 28 | 0 | 0 | 0 | 55 | 0 | 35 |
| Medical Office Buiding Trips | 0 | 19 | 140 | 68 | 0 | 0 | 33 | 3 | 8 | 2 | 16 | 0 |
| Vista de la Sierra Trips | 0 | 28 | 0 | 0 | 22 | 0 | 0 | 0 | 0 | 0 | 0 | 0 |
| Other Developments (See Below) | 0 | 108 | 0 | 0 | 90 | 0 | 0 | 0 | 0 | 0 | 0 | 0 |
| ***Subtotal (NO BUILD - A.M.)*** | ***23*** | ***252*** | ***140*** | ***68*** | ***238*** | ***28*** | ***33*** | ***3*** | ***8*** | ***57*** | ***16*** | ***35*** |
| *Percent Residential Trips Generated(Entering)* | *0.00%* | ***77.00%*** | *0.00%* | *0.00%* | *0.00%* | *0.00%* | *0.00%* | *0.00%* | *0.00%* | ***1.00%*** | *0.00%* | *0.00%* |
| *Percent Residential Trips Generated(Exiting)* | *0.00%* | *0.00%* | *0.00%* | *0.00%* | ***77.00%*** | ***1.00%*** | *0.00%* | *0.00%* | *0.00%* | *0.00%* | *0.00%* | *0.00%* |
| *Percent Commercial Trips Generated(Entering)* | *0.00%* | *0.00%* | ***77.00%*** | ***22.00%*** | *0.00%* | *0.00%* | *0.00%* | *0.00%* | *0.00%* | ***1.00%*** | *0.00%* | *0.00%* |
| *Percent Commercial Trips Generated(Exiting)* | *0.00%* | *0.00%* | *0.00%* | *0.00%* | *0.00%* | *0.00%* | ***77.00%*** | ***1.00%*** | ***22.00%*** | *0.00%* | *0.00%* | *0.00%* |
| *Percent Office Trips Generated(Entering)* | *0.00%* | ***34.00%*** | ***50.00%*** | ***15.00%*** | *0.00%* | *0.00%* | *0.00%* | *0.00%* | *0.00%* | *0.00%* | *0.00%* | *0.00%* |
| *Percent Office Trips Generated(Exiting)* | *0.00%* | *0.00%* | *0.00%* | *0.00%* | *0.00%* | *0.00%* | ***84.00%*** | ***1.00%*** | ***10.00%*** | *0.00%* | *0.00%* | *0.00%* |
| Total Trips Generated | 0 | 94 | 160 | 47 | 97 | 1 | 106 | 1 | 24 | 1 | 0 | 0 |
| **Subtotal AM Pk Hr. BUILD Volumes** | **23** | **346** | **300** | **115** | **335** | **29** | **139** | **4** | **32** | **58** | **16** | **35** |
| *Pass-by Trip Adjustments* | *0* | *0* | *0* | *0* | *0* | *0* | *0* | *0* | *0* | *0* | *0* | *0* |
| **Total AM Peak Hour BUILD Volumes** | **23** | **346** | **300** | **115** | **335** | **29** | **139** | **4** | **32** | **58** | **16** | **35** |

| | **Eastbound (Beckner Rd.)** | | | **Westbound (Beckner Rd.)** | | | **Northbound (Walking Rain)** | | | **Southbound (Walking Rain)** | | |
|---|---|---|---|---|---|---|---|---|---|---|---|---|
| | Left | Thru | Right | Left | Thru | Right | Left | Thru | Right | Left | Thru | Right |
| Existing Volumes | 29 | 112 | 0 | 0 | 91 | 35 | 0 | 0 | 0 | 27 | 0 | 17 |
| Background Traffic Growth | 8 | 29 | 0 | 0 | 24 | 9 | 0 | 0 | 0 | 7 | 0 | 4 |
| *Subtotal* | 37 | 141 | 0 | 0 | 115 | 44 | 0 | 0 | 0 | 34 | 0 | 21 |
| Medical Office Buiding Trips | 0 | 11 | 69 | 29 | 0 | 0 | 175 | 21 | 13 | 1 | 8 | 0 |
| Vista de la Sierra Trips | 0 | 17 | 0 | 0 | 12 | 0 | 0 | 0 | 0 | 0 | 0 | 0 |
| Other Developments (See Below) | 0 | 77 | 0 | 0 | 160 | 0 | 0 | 0 | 0 | 0 | 0 | 0 |
| ***Subtotal (NO BUILD - P.M.)*** | ***37*** | ***246*** | ***69*** | ***29*** | ***287*** | ***44*** | ***175*** | ***21*** | ***13*** | ***35*** | ***8*** | ***21*** |
| *Percent Residential Trips Generated(Entering)* | *0.00%* | ***77.00%*** | *0.00%* | *0.00%* | *0.00%* | *0.00%* | *0.00%* | *0.00%* | *0.00%* | ***1.00%*** | *0.00%* | *0.00%* |
| *Percent Residential Trips Generated(Exiting)* | *0.00%* | *0.00%* | *0.00%* | *0.00%* | ***77.00%*** | ***1.00%*** | *0.00%* | *0.00%* | *0.00%* | *0.00%* | *0.00%* | *0.00%* |
| *Percent Commercial Trips Generated(Entering)* | *0.00%* | *0.00%* | ***77.00%*** | ***22.00%*** | *0.00%* | *0.00%* | *0.00%* | *0.00%* | *0.00%* | ***1.00%*** | *0.00%* | *0.00%* |
| *Percent Commercial Trips Generated(Exiting)* | *0.00%* | *0.00%* | *0.00%* | *0.00%* | *0.00%* | *0.00%* | ***77.00%*** | ***1.00%*** | ***22.00%*** | *0.00%* | *0.00%* | *0.00%* |
| *Percent Office Trips Generated(Entering)* | *0.00%* | ***34.00%*** | ***50.00%*** | ***15.00%*** | *0.00%* | *0.00%* | *0.00%* | *0.00%* | *0.00%* | *0.00%* | *0.00%* | *0.00%* |
| *Percent Office Trips Generated(Exiting)* | *0.00%* | *0.00%* | *0.00%* | *0.00%* | *0.00%* | *0.00%* | ***84.00%*** | ***1.00%*** | ***10.00%*** | *0.00%* | *0.00%* | *0.00%* |
| Total Trips Generated | 0 | 169 | 87 | 26 | 81 | 1 | 232 | 2 | 34 | 2 | 0 | 0 |
| **Total PM Peak Hour BUILD Volumes** | **37** | **415** | **156** | **55** | **368** | **45** | **407** | **23** | **47** | **37** | **8** | **21** |

| | Entering | Exiting | | |
|---|---|---|---|---|
| Number of Residential Trips Generated | **126** | **44** | A.M. | 100% Residential Development |
| | **177** | **105** | P.M. | |
| Number of Commercial Trips Generated | **94** | **87** | A.M. | 100% Commercial Development |
| | **49** | **49** | P.M. | |
| Number of Office Trips Generated | **175** | **46** | A.M. | 100% Office Development |
| | **98** | **231** | P.M. | |

| | | | | | | | | | | | | |
|---|---|---|---|---|---|---|---|---|---|---|---|---|
| AM Peak - Other Developments | | | | | | | | | | | | |
| Cielo Apts. Trips | 0 | 14 | 0 | 0 | 5 | 0 | 0 | 0 | 0 | 0 | 0 | 0 |
| Village at Las Soleras Trip | 0 | 0 | 0 | 0 | 0 | 0 | 0 | 0 | 0 | 0 | 0 | 0 |
| Cavan Development Trips | 0 | 9 | 0 | 0 | 3 | 0 | 0 | 0 | 0 | 0 | 0 | 0 |
| 5201 Beckner Rd. Trips | 0 | 49 | 0 | 0 | 15 | 0 | 0 | 0 | 0 | 0 | 0 | 0 |
| Hevenly Santa Fe Trips | 0 | 32 | 0 | 0 | 11 | 0 | 0 | 0 | 0 | 0 | 0 | 0 |
| Presbyterian Medical Offices | 0 | 4 | 0 | 0 | 4 | 0 | 0 | 0 | 0 | 0 | 0 | 0 |
| 5407 Beckner Rd. Trips | 0 | 0 | 0 | 0 | 52 | 0 | 0 | 0 | 0 | 0 | 0 | 0 |
| Subtotal (AM Peak) - Projects Above - | 0 | 108 | 0 | 0 | 90 | 0 | 0 | 0 | 0 | 0 | 0 | 0 |
| PM Peak - Other Developments | | | | | | | | | | | | |
| Cielo Apts. Trips | 0 | 11 | 0 | 0 | 12 | 0 | 0 | 0 | 0 | 0 | 0 | 0 |
| Village at Las Soleras Trip | 0 | 0 | 0 | 0 | 0 | 0 | 0 | 0 | 0 | 0 | 0 | 0 |
| Cavan Development Trips | 0 | 6 | 0 | 0 | 12 | 0 | 0 | 0 | 0 | 0 | 0 | 0 |
| 5201 Beckner Rd. Trips | 0 | 27 | 0 | 0 | 46 | 0 | 0 | 0 | 0 | 0 | 0 | 0 |
| Hevenly Santa Fe Trips | 0 | 21 | 0 | 0 | 36 | 0 | 0 | 0 | 0 | 0 | 0 | 0 |
| Presbyterian Medical Offices | 0 | 12 | 0 | 0 | 4 | 0 | 0 | 0 | 0 | 0 | 0 | 0 |
| 5407 Beckner Rd. Trips | 0 | 0 | 0 | 0 | 50 | 0 | 0 | 0 | 0 | 0 | 0 | 0 |
| Subtotal (PM Peak) - Projects Above - | 0 | 77 | 0 | 0 | 160 | 0 | 0 | 0 | 0 | 0 | 0 | 0 |

2035
**NO BUILD**

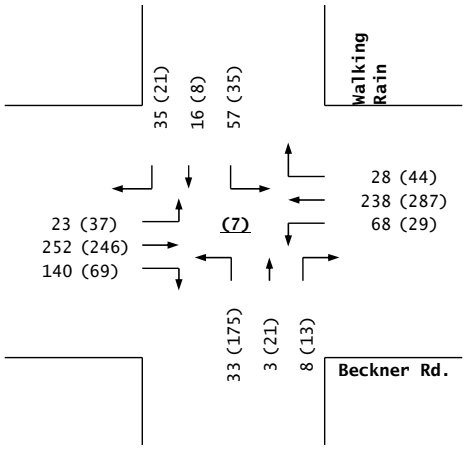


**Trips**

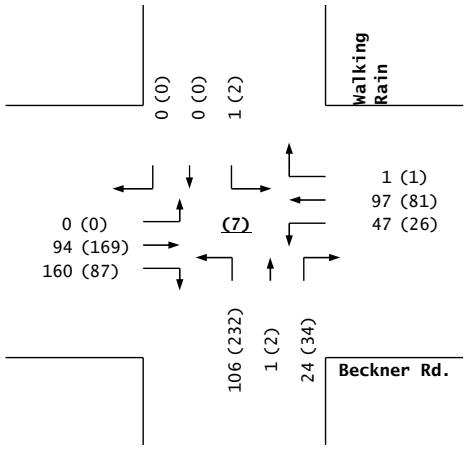


2035
**BUILD**

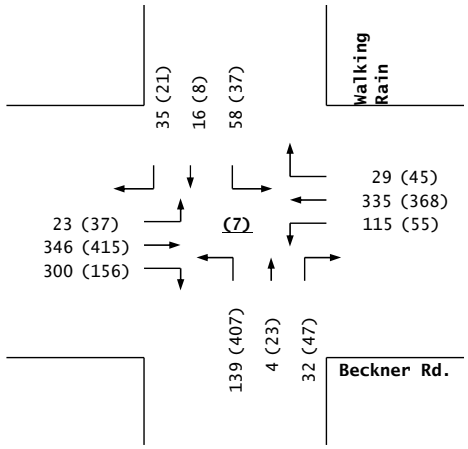


**Beckner Rd. / Walking Rain**

# *Las Soleras, Tracts 18A & 18B*

Projected Turning Movements Worksheet

***Beckner Rd. / Driveway "A"***

**INTERSECTION:** E-W Street: **Beckner Rd.** (8)

N-S Street: **Driveway "A"** **(Right-in, right-out ONLY)**

Year of Existing Counts 2022

Horizon Year **2035**

| **Growth Rates** | **2.00%** | | | **2.00%** | | | **2.00%** | | | **2.00%** | | |
|---|---|---|---|---|---|---|---|---|---|---|---|---|
| | **Eastbound (Beckner Rd.)** | | | **Westbound (Beckner Rd.)** | | | **Northbound (Driveway "A")** | | | **Southbound (Driveway "A")** | | |
| | Left | Thru | Right | Left | Thru | Right | Left | Thru | Right | Left | Thru | Right |
| Existing Volumes | 0 | 121 | 0 | 0 | 122 | 0 | 0 | 0 | 0 | 0 | 0 | 0 |
| Background Traffic Growth | 0 | 31 | 0 | 0 | 32 | 0 | 0 | 0 | 0 | 0 | 0 | 0 |
| *Subtotal* | 0 | 152 | 0 | 0 | 154 | 0 | 0 | 0 | 0 | 0 | 0 | 0 |
| Medical Office Buiding Trips | 0 | 8 | 21 | 0 | 68 | 0 | 0 | 0 | 19 | 0 | 0 | 0 |
| Vista de la Sierra Trips | 0 | 28 | 0 | 0 | 22 | 0 | 0 | 0 | 0 | 0 | 0 | 0 |
| Other Developments (See Below) | 0 | 108 | 0 | 0 | 90 | 0 | 0 | 0 | 0 | 0 | 0 | 0 |
| ***Subtotal (NO BUILD - A.M.)*** | ***0*** | ***296*** | ***21*** | ***0*** | ***334*** | ***0*** | ***0*** | ***0*** | ***19*** | ***0*** | ***0*** | ***0*** |
| *Percent Residential Trips Generated(Entering)* | *0.00%* | ***78.00%*** | *0.00%* | *0.00%* | *0.00%* | *0.00%* | *0.00%* | *0.00%* | *0.00%* | *0.00%* | *0.00%* | *0.00%* |
| *Percent Residential Trips Generated(Exiting)* | *0.00%* | *0.00%* | *0.00%* | *0.00%* | ***78.00%*** | *0.00%* | *0.00%* | *0.00%* | *0.00%* | *0.00%* | *0.00%* | *0.00%* |
| *Percent Commercial Trips Generated(Entering)* | *0.00%* | *0.00%* | *0.00%* | *0.00%* | ***22.00%*** | *0.00%* | *0.00%* | *0.00%* | *0.00%* | *0.00%* | *0.00%* | *0.00%* |
| *Percent Commercial Trips Generated(Exiting)* | *0.00%* | *0.00%* | *0.00%* | *0.00%* | *0.00%* | *0.00%* | *0.00%* | *0.00%* | *0.00%* | *0.00%* | *0.00%* | *0.00%* |
| *Percent Office Trips Generated(Entering)* | *0.00%* | *0.00%* | ***35.00%*** | *0.00%* | ***15.00%*** | *0.00%* | *0.00%* | *0.00%* | *0.00%* | *0.00%* | *0.00%* | *0.00%* |
| *Percent Office Trips Generated(Exiting)* | *0.00%* | ***10.00%*** | *0.00%* | *0.00%* | *0.00%* | *0.00%* | *0.00%* | *0.00%* | ***5.00%*** | *0.00%* | *0.00%* | *0.00%* |
| Total Trips Generated | 0 | 39 | 61 | 0 | 145 | 0 | 0 | 0 | 2 | 0 | 0 | 0 |
| **Subtotal AM Pk Hr. BUILD Volumes** | **0** | **335** | **82** | **0** | **479** | **0** | **0** | **0** | **21** | **0** | **0** | **0** |
| *Pass-by Trip Adjustments* | *0* | *0* | *0* | *0* | *0* | *0* | *0* | *0* | *0* | *0* | *0* | *0* |
| **Total AM Peak Hour BUILD Volumes** | **0** | **335** | **82** | **0** | **479** | **0** | **0** | **0** | **21** | **0** | **0** | **0** |

| | **Eastbound (Beckner Rd.)** | | | **Westbound (Beckner Rd.)** | | | **Northbound (Driveway "A")** | | | **Southbound (Driveway "A")** | | |
|---|---|---|---|---|---|---|---|---|---|---|---|---|
| | Left | Thru | Right | Left | Thru | Right | Left | Thru | Right | Left | Thru | Right |
| Existing Volumes | 0 | 139 | 0 | 0 | 126 | 0 | 0 | 0 | 0 | 0 | 0 | 0 |
| Background Traffic Growth | 0 | 36 | 0 | 0 | 33 | 0 | 0 | 0 | 0 | 0 | 0 | 0 |
| *Subtotal* | 0 | 175 | 0 | 0 | 159 | 0 | 0 | 0 | 0 | 0 | 0 | 0 |
| Medical Office Buiding Trips | 0 | 13 | 12 | 0 | 29 | 0 | 0 | 0 | 52 | 0 | 0 | 0 |
| Vista de la Sierra Trips | 0 | 17 | 0 | 0 | 12 | 0 | 0 | 0 | 0 | 0 | 0 | 0 |
| Other Developments (See Below) | 0 | 77 | 0 | 0 | 160 | 0 | 0 | 0 | 0 | 0 | 0 | 0 |
| ***Subtotal (NO BUILD - P.M.)*** | ***0*** | ***282*** | ***12*** | ***0*** | ***360*** | ***0*** | ***0*** | ***0*** | ***52*** | ***0*** | ***0*** | ***0*** |
| *Percent Residential Trips Generated(Entering)* | *0.00%* | ***78.00%*** | *0.00%* | *0.00%* | *0.00%* | *0.00%* | *0.00%* | *0.00%* | *0.00%* | *0.00%* | *0.00%* | *0.00%* |
| *Percent Residential Trips Generated(Exiting)* | *0.00%* | *0.00%* | *0.00%* | *0.00%* | ***78.00%*** | *0.00%* | *0.00%* | *0.00%* | *0.00%* | *0.00%* | *0.00%* | *0.00%* |
| *Percent Commercial Trips Generated(Entering)* | *0.00%* | *0.00%* | *0.00%* | *0.00%* | ***22.00%*** | *0.00%* | *0.00%* | *0.00%* | *0.00%* | *0.00%* | *0.00%* | *0.00%* |
| *Percent Commercial Trips Generated(Exiting)* | *0.00%* | *0.00%* | *0.00%* | *0.00%* | *0.00%* | *0.00%* | *0.00%* | *0.00%* | *0.00%* | *0.00%* | *0.00%* | *0.00%* |
| *Percent Office Trips Generated(Entering)* | *0.00%* | *0.00%* | ***35.00%*** | *0.00%* | ***15.00%*** | *0.00%* | *0.00%* | *0.00%* | *0.00%* | *0.00%* | *0.00%* | *0.00%* |
| *Percent Office Trips Generated(Exiting)* | *0.00%* | ***10.00%*** | *0.00%* | *0.00%* | *0.00%* | *0.00%* | *0.00%* | *0.00%* | ***5.00%*** | *0.00%* | *0.00%* | *0.00%* |
| Total Trips Generated | 0 | 161 | 34 | 0 | 108 | 0 | 0 | 0 | 12 | 0 | 0 | 0 |
| **Total PM Peak Hour BUILD Volumes** | **0** | **443** | **46** | **0** | **468** | **0** | **0** | **0** | **64** | **0** | **0** | **0** |

| | Entering | Exiting | | |
|---|---|---|---|---|
| Number of Residential Trips Generated | **126** | **44** | A.M. | |
| | **177** | **105** | P.M. | |
| Number of Commercial Trips Generated | **94** | **87** | A.M. | 100% Commercial Development |
| | **49** | **49** | P.M. | |
| Number of Office Trips Generated | **175** | **46** | A.M. | 100% Office Development |
| | **98** | **231** | P.M. | |

| AM Peak - Other Developments | | | | | | | | | | | | |
|---|---|---|---|---|---|---|---|---|---|---|---|---|
| Cielo Apts. Trips | 0 | 14 | 0 | 0 | 5 | 0 | 0 | 0 | 0 | 0 | 0 | 0 |
| Village at Las Soleras Trip | 0 | 0 | 0 | 0 | 0 | 0 | 0 | 0 | 0 | 0 | 0 | 0 |
| Cavan Development Trips | 0 | 9 | 0 | 0 | 3 | 0 | 0 | 0 | 0 | 0 | 0 | 0 |
| 5201 Beckner Rd. Trips | 0 | 49 | 0 | 0 | 15 | 0 | 0 | 0 | 0 | 0 | 0 | 0 |
| Hevenly Santa Fe Trips | 0 | 32 | 0 | 0 | 11 | 0 | 0 | 0 | 0 | 0 | 0 | 0 |
| Presbyterian Medical Offices | 0 | 4 | 0 | 0 | 4 | 0 | 0 | 0 | 0 | 0 | 0 | 0 |
| 5407 Beckner Rd. Trips | 0 | 0 | 0 | 0 | 52 | 0 | 0 | 0 | 0 | 0 | 0 | 0 |
| Subtotal (AM Peak) - Projects Above - | 0 | 108 | 0 | 0 | 90 | 0 | 0 | 0 | 0 | 0 | 0 | 0 |

| PM Peak - Other Developments | | | | | | | | | | | | |
|---|---|---|---|---|---|---|---|---|---|---|---|---|
| Cielo Apts. Trips | 0 | 11 | 0 | 0 | 12 | 0 | 0 | 0 | 0 | 0 | 0 | 0 |
| Village at Las Soleras Trip | 0 | 0 | 0 | 0 | 0 | 0 | 0 | 0 | 0 | 0 | 0 | 0 |
| Cavan Development Trips | 0 | 6 | 0 | 0 | 12 | 0 | 0 | 0 | 0 | 0 | 0 | 0 |
| 5201 Beckner Rd. Trips | 0 | 27 | 0 | 0 | 46 | 0 | 0 | 0 | 0 | 0 | 0 | 0 |
| Hevenly Santa Fe Trips | 0 | 21 | 0 | 0 | 36 | 0 | 0 | 0 | 0 | 0 | 0 | 0 |
| Presbyterian Medical Offices | 0 | 12 | 0 | 0 | 4 | 0 | 0 | 0 | 0 | 0 | 0 | 0 |
| 5407 Beckner Rd. Trips | 0 | 0 | 0 | 0 | 50 | 0 | 0 | 0 | 0 | 0 | 0 | 0 |
| Subtotal (PM Peak) - Projects Above - | 0 | 77 | 0 | 0 | 160 | 0 | 0 | 0 | 0 | 0 | 0 | 0 |

2035
**NO BUILD**

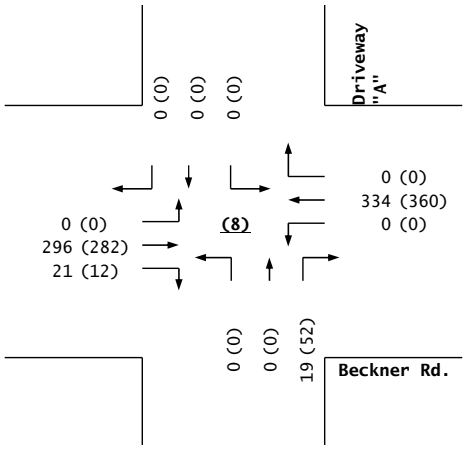


**Trips**

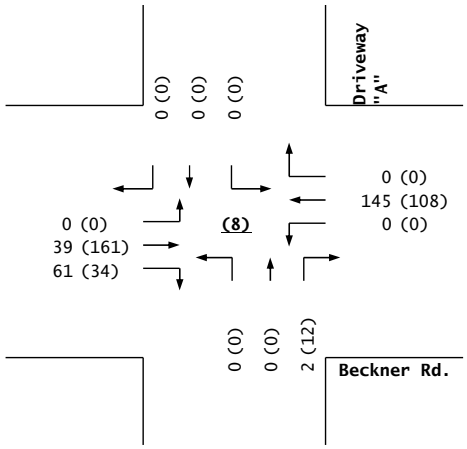


2035
**BUILD**

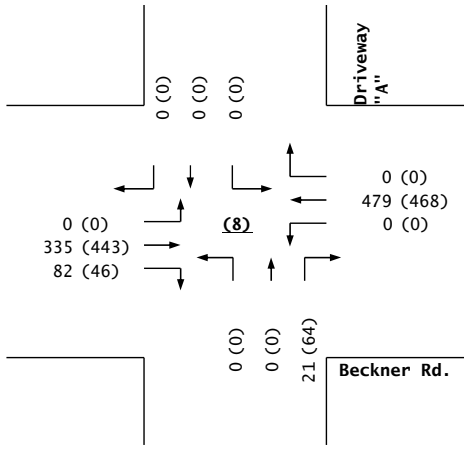


**Beckner Rd. / Driveway "A"**

## *Las Soleras, Tracts 18A & 18B*

Projected Turning Movements Worksheet

***Beckner Rd. / Driveway "B"***

**INTERSECTION:** E-W Street: **Beckner Rd.** (9)

N-S Street: **Driveway "B"**

Year of Existing Counts 2022

Horizon Year **2035**

**Growth Rates** 2.00% 2.00% 2.00% 2.00%

| | Eastbound (Beckner Rd.) | | | Westbound (Beckner Rd.) | | | Northbound (Driveway "B") | | | Southbound (Driveway "B") | | |
|---|---|---|---|---|---|---|---|---|---|---|---|---|
| | Left | Thru | Right | Left | Thru | Right | Left | Thru | Right | Left | Thru | Right |
| ***Subtotal (NO BUILD - A.M.)*** | ***0*** | ***315*** | ***0*** | ***0*** | ***334*** | ***0*** | ***0*** | ***0*** | ***0*** | ***0*** | ***0*** | ***0*** |
| *Percent Residential Trips Generated(Entering)* | *0.00%* | ***52.00%*** | ***26.00%*** | ***7.00%*** | *0.00%* | *0.00%* | *0.00%* | *0.00%* | *0.00%* | *0.00%* | *0.00%* | *0.00%* |
| *Percent Residential Trips Generated(Exiting)* | *0.00%* | *0.00%* | *0.00%* | ***33.00%*** | *0.00%* | *0.00%* | ***26.00%*** | *0.00%* | ***7.00%*** | *0.00%* | *0.00%* | *0.00%* |
| *Percent Commercial Trips Generated(Entering)* | *0.00%* | *0.00%* | *0.00%* | *0.00%* | ***22.00%*** | *0.00%* | *0.00%* | *0.00%* | *0.00%* | *0.00%* | *0.00%* | *0.00%* |
| *Percent Commercial Trips Generated(Exiting)* | *0.00%* | ***22.00%*** | *0.00%* | *0.00%* | *0.00%* | *0.00%* | *0.00%* | *0.00%* | *0.00%* | *0.00%* | *0.00%* | *0.00%* |
| *Percent Office Trips Generated(Entering)* | *0.00%* | *0.00%* | *0.00%* | *0.00%* | ***15.00%*** | *0.00%* | *0.00%* | *0.00%* | *0.00%* | *0.00%* | *0.00%* | *0.00%* |
| *Percent Office Trips Generated(Exiting)* | *0.00%* | ***15.00%*** | *0.00%* | *0.00%* | *0.00%* | *0.00%* | *0.00%* | *0.00%* | *0.00%* | *0.00%* | *0.00%* | *0.00%* |
| Total Trips Generated | 0 | 49 | 11 | 45 | 47 | 0 | 33 | 0 | 9 | 0 | 0 | 0 |
| **Total AM Peak Hour BUILD Volumes** | **0** | **364** | **11** | **45** | **381** | **0** | **33** | **0** | **9** | **0** | **0** | **0** |

| | Eastbound (Beckner Rd.) | | | Westbound (Beckner Rd.) | | | Northbound (Driveway "B") | | | Southbound (Driveway "B") | | |
|---|---|---|---|---|---|---|---|---|---|---|---|---|
| | Left | Thru | Right | Left | Thru | Right | Left | Thru | Right | Left | Thru | Right |
| ***Subtotal (NO BUILD - P.M.)*** | ***0*** | ***334*** | ***0*** | ***0*** | ***360*** | ***0*** | ***0*** | ***0*** | ***0*** | ***0*** | ***0*** | ***0*** |
| *Percent Residential Trips Generated(Entering)* | *0.00%* | ***52.00%*** | ***26.00%*** | ***7.00%*** | *0.00%* | *0.00%* | *0.00%* | *0.00%* | *0.00%* | *0.00%* | *0.00%* | *0.00%* |
| *Percent Residential Trips Generated(Exiting)* | *0.00%* | *0.00%* | *0.00%* | ***33.00%*** | *0.00%* | *0.00%* | ***26.00%*** | *0.00%* | ***7.00%*** | *0.00%* | *0.00%* | *0.00%* |
| *Percent Commercial Trips Generated(Entering)* | *0.00%* | *0.00%* | *0.00%* | *0.00%* | ***22.00%*** | *0.00%* | *0.00%* | *0.00%* | *0.00%* | *0.00%* | *0.00%* | *0.00%* |
| *Percent Commercial Trips Generated(Exiting)* | *0.00%* | ***22.00%*** | *0.00%* | *0.00%* | *0.00%* | *0.00%* | *0.00%* | *0.00%* | *0.00%* | *0.00%* | *0.00%* | *0.00%* |
| *Percent Office Trips Generated(Entering)* | *0.00%* | *0.00%* | *0.00%* | *0.00%* | ***15.00%*** | *0.00%* | *0.00%* | *0.00%* | *0.00%* | *0.00%* | *0.00%* | *0.00%* |
| *Percent Office Trips Generated(Exiting)* | *0.00%* | ***15.00%*** | *0.00%* | *0.00%* | *0.00%* | *0.00%* | *0.00%* | *0.00%* | *0.00%* | *0.00%* | *0.00%* | *0.00%* |
| Total Trips Generated | 0 | 138 | 46 | 47 | 26 | 0 | 27 | 0 | 7 | 0 | 0 | 0 |
| **Total PM Peak Hour BUILD Volumes** | **0** | **472** | **46** | **47** | **386** | **0** | **27** | **0** | **7** | **0** | **0** | **0** |

| | Entering | Exiting | | |
|---|---|---|---|---|
| Number of Residential Trips Generated | **126** | **44** | A.M. | 100% Residential Development |
| | **177** | **105** | P.M. | |
| Number of Commercial Trips Generated | **94** | **87** | A.M. | 100% Commercial Development |
| | **49** | **49** | P.M. | |
| Number of Office Trips Generated | **175** | **46** | A.M. | 100% Office Development |
| | **98** | **231** | P.M. | |

2035
**NO BUILD**

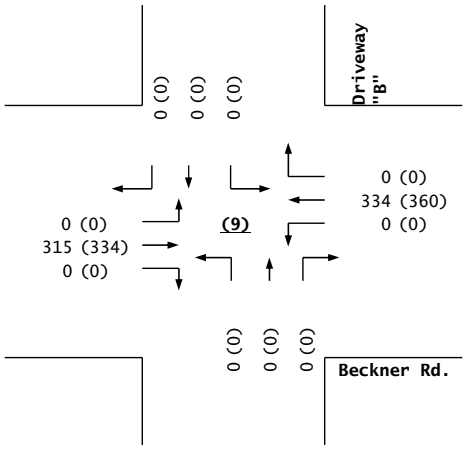


**Trips**

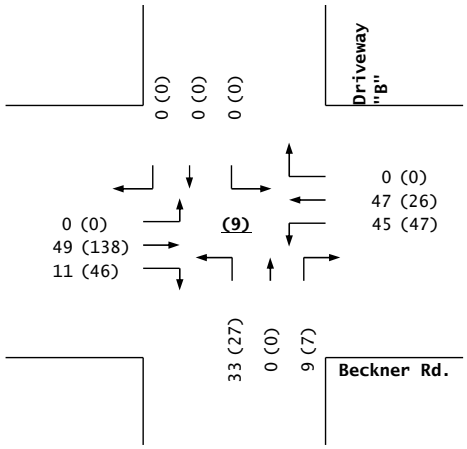


2035
**BUILD**

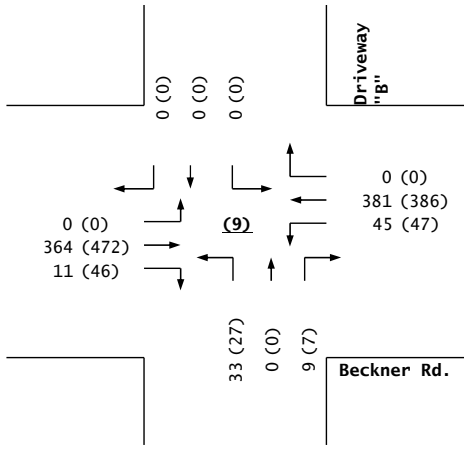


**Beckner Rd. / Driveway "B"**

## *Las Soleras, Tracts 18A & 18B*

Projected Turning Movements Worksheet

***Beckner Rd. / Driveway "C"***

**INTERSECTION:** E-W Street: **Beckner Rd.** (10)

N-S Street: **Driveway "C"**

Year of Existing Counts 2022

Horizon Year **2035**

**Growth Rates** 2.00% 2.00% 2.00% 2.00%

| | Eastbound (Beckner Rd.) | | | Westbound (Beckner Rd.) | | | Northbound (Driveway "C") | | | Southbound (Driveway "C") | | |
|---|---|---|---|---|---|---|---|---|---|---|---|---|
| | Left | Thru | Right | Left | Thru | Right | Left | Thru | Right | Left | Thru | Right |
| ***Subtotal (NO BUILD - A.M.)*** | ***0*** | ***315*** | ***0*** | ***0*** | ***334*** | ***0*** | ***0*** | ***0*** | ***0*** | ***0*** | ***0*** | ***0*** |
| *Percent Residential Trips Generated(Entering)* | *0.00%* | ***26.00%*** | ***26.00%*** | ***7.00%*** | ***7.00%*** | *0.00%* | *0.00%* | *0.00%* | *0.00%* | *0.00%* | *0.00%* | *0.00%* |
| *Percent Residential Trips Generated(Exiting)* | *0.00%* | *0.00%* | *0.00%* | ***33.00%*** | *0.00%* | *0.00%* | ***26.00%*** | *0.00%* | ***7.00%*** | *0.00%* | *0.00%* | *0.00%* |
| *Percent Commercial Trips Generated(Entering)* | *0.00%* | *0.00%* | *0.00%* | *0.00%* | ***22.00%*** | *0.00%* | *0.00%* | *0.00%* | *0.00%* | *0.00%* | *0.00%* | *0.00%* |
| *Percent Commercial Trips Generated(Exiting)* | *0.00%* | ***22.00%*** | *0.00%* | *0.00%* | *0.00%* | *0.00%* | *0.00%* | *0.00%* | *0.00%* | *0.00%* | *0.00%* | *0.00%* |
| *Percent Office Trips Generated(Entering)* | *0.00%* | *0.00%* | *0.00%* | *0.00%* | ***15.00%*** | *0.00%* | *0.00%* | *0.00%* | *0.00%* | *0.00%* | *0.00%* | *0.00%* |
| *Percent Office Trips Generated(Exiting)* | *0.00%* | ***15.00%*** | *0.00%* | *0.00%* | *0.00%* | *0.00%* | *0.00%* | *0.00%* | *0.00%* | *0.00%* | *0.00%* | *0.00%* |
| Total Trips Generated | 0 | 37 | 11 | 45 | 50 | 0 | 33 | 0 | 9 | 0 | 0 | 0 |
| **Total AM Peak Hour BUILD Volumes** | **0** | **352** | **11** | **45** | **384** | **0** | **33** | **0** | **9** | **0** | **0** | **0** |

| | Eastbound (Beckner Rd.) | | | Westbound (Beckner Rd.) | | | Northbound (Driveway "C") | | | Southbound (Driveway "C") | | |
|---|---|---|---|---|---|---|---|---|---|---|---|---|
| | Left | Thru | Right | Left | Thru | Right | Left | Thru | Right | Left | Thru | Right |
| ***Subtotal (NO BUILD - P.M.)*** | ***0*** | ***334*** | ***0*** | ***0*** | ***360*** | ***0*** | ***0*** | ***0*** | ***0*** | ***0*** | ***0*** | ***0*** |
| *Percent Residential Trips Generated(Entering)* | *0.00%* | ***26.00%*** | ***26.00%*** | ***7.00%*** | ***7.00%*** | *0.00%* | *0.00%* | *0.00%* | *0.00%* | *0.00%* | *0.00%* | *0.00%* |
| *Percent Residential Trips Generated(Exiting)* | *0.00%* | *0.00%* | *0.00%* | ***33.00%*** | *0.00%* | *0.00%* | ***26.00%*** | *0.00%* | ***7.00%*** | *0.00%* | *0.00%* | *0.00%* |
| *Percent Commercial Trips Generated(Entering)* | *0.00%* | *0.00%* | *0.00%* | *0.00%* | ***22.00%*** | *0.00%* | *0.00%* | *0.00%* | *0.00%* | *0.00%* | *0.00%* | *0.00%* |
| *Percent Commercial Trips Generated(Exiting)* | *0.00%* | ***22.00%*** | *0.00%* | *0.00%* | *0.00%* | *0.00%* | *0.00%* | *0.00%* | *0.00%* | *0.00%* | *0.00%* | *0.00%* |
| *Percent Office Trips Generated(Entering)* | *0.00%* | *0.00%* | *0.00%* | *0.00%* | ***15.00%*** | *0.00%* | *0.00%* | *0.00%* | *0.00%* | *0.00%* | *0.00%* | *0.00%* |
| *Percent Office Trips Generated(Exiting)* | *0.00%* | ***15.00%*** | *0.00%* | *0.00%* | *0.00%* | *0.00%* | *0.00%* | *0.00%* | *0.00%* | *0.00%* | *0.00%* | *0.00%* |
| Total Trips Generated | 0 | 92 | 46 | 47 | 38 | 0 | 27 | 0 | 7 | 0 | 0 | 0 |
| **Total PM Peak Hour BUILD Volumes** | **0** | **426** | **46** | **47** | **398** | **0** | **27** | **0** | **7** | **0** | **0** | **0** |

| | Entering | Exiting | | |
|---|---|---|---|---|
| Number of Residential Trips Generated | **126** | **44** | A.M. | |
| | **177** | **105** | P.M. | |
| Number of Commercial Trips Generated | **94** | **87** | A.M. | 100% Commercial Development |
| | **49** | **49** | P.M. | |
| Number of Office Trips Generated | **175** | **46** | A.M. | 100% Office Development |
| | **98** | **231** | P.M. | |

2035
**NO BUILD**

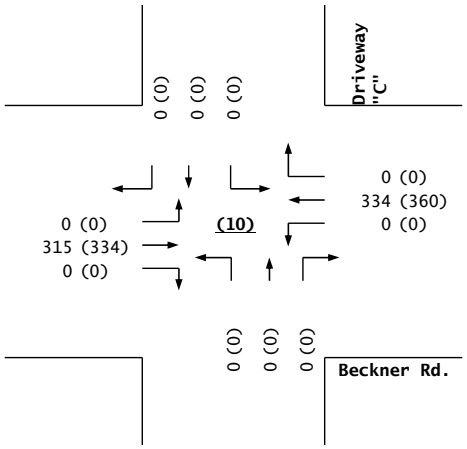


**Trips**

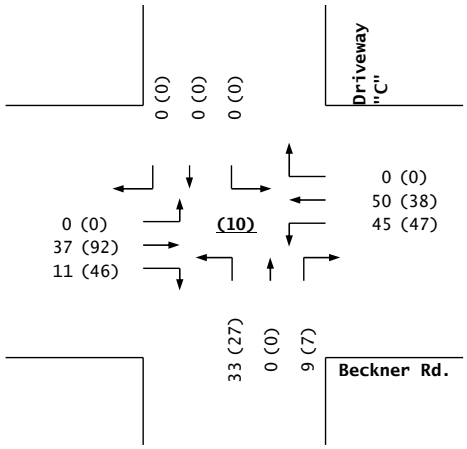


2035
**BUILD**

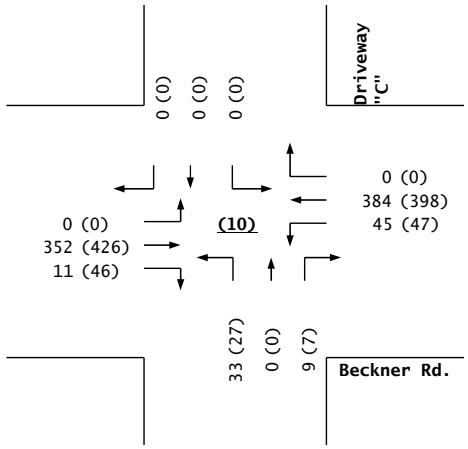


**Beckner Rd. / Driveway "C"**

# *Las Soleras, Tracts 18A & 18B*

Projected Turning Movements Worksheet

***Beckner Rd. / Driveway "D"***

**INTERSECTION:** E-W Street: **Beckner Rd.** (11)

N-S Street: **Driveway "D"**

Year of Existing Counts 2022

Horizon Year **2035**

| **Growth Rates** | 2.00% | | | 2.00% | | | 2.00% | | | 2.00% | | |
|---|---|---|---|---|---|---|---|---|---|---|---|---|
| | **Eastbound (Beckner Rd.)** | | | **Westbound (Beckner Rd.)** | | | **Northbound (Driveway "D")** | | | **Southbound (Driveway "D")** | | |
| | Left | Thru | Right | Left | Thru | Right | Left | Thru | Right | Left | Thru | Right |
| ***Subtotal (NO BUILD - A.M.)*** | ***0*** | ***315*** | ***0*** | ***0*** | ***334*** | ***0*** | ***0*** | ***0*** | ***0*** | ***0*** | ***0*** | ***0*** |
| *Percent Residential Trips Generated(Entering)* | *0.00%* | *0.00%* | ***26.00%*** | ***8.00%*** | ***14.00%*** | *0.00%* | *0.00%* | *0.00%* | *0.00%* | *0.00%* | *0.00%* | *0.00%* |
| *Percent Residential Trips Generated(Exiting)* | *0.00%* | *0.00%* | *0.00%* | ***33.00%*** | *0.00%* | *0.00%* | ***26.00%*** | *0.00%* | ***7.00%*** | *0.00%* | *0.00%* | *0.00%* |
| *Percent Commercial Trips Generated(Entering)* | *0.00%* | *0.00%* | *0.00%* | *0.00%* | ***22.00%*** | *0.00%* | *0.00%* | *0.00%* | *0.00%* | *0.00%* | *0.00%* | *0.00%* |
| *Percent Commercial Trips Generated(Exiting)* | *0.00%* | ***22.00%*** | *0.00%* | *0.00%* | *0.00%* | *0.00%* | *0.00%* | *0.00%* | *0.00%* | *0.00%* | *0.00%* | *0.00%* |
| *Percent Office Trips Generated(Entering)* | *0.00%* | *0.00%* | *0.00%* | *0.00%* | ***15.00%*** | *0.00%* | *0.00%* | *0.00%* | *0.00%* | *0.00%* | *0.00%* | *0.00%* |
| *Percent Office Trips Generated(Exiting)* | *0.00%* | ***15.00%*** | *0.00%* | *0.00%* | *0.00%* | *0.00%* | *0.00%* | *0.00%* | *0.00%* | *0.00%* | *0.00%* | *0.00%* |
| Total Trips Generated | 0 | 26 | 11 | 46 | 53 | 0 | 33 | 0 | 9 | 0 | 0 | 0 |
| **Total AM Peak Hour BUILD Volumes** | **0** | **341** | **11** | **46** | **387** | **0** | **33** | **0** | **9** | **0** | **0** | **0** |

| | **Eastbound (Beckner Rd.)** | | | **Westbound (Beckner Rd.)** | | | **Northbound (Driveway "D")** | | | **Southbound (Driveway "D")** | | |
|---|---|---|---|---|---|---|---|---|---|---|---|---|
| | Left | Thru | Right | Left | Thru | Right | Left | Thru | Right | Left | Thru | Right |
| ***Subtotal (NO BUILD - P.M.)*** | ***0*** | ***334*** | ***0*** | ***0*** | ***360*** | ***0*** | ***0*** | ***0*** | ***0*** | ***0*** | ***0*** | ***0*** |
| *Percent Residential Trips Generated(Entering)* | *0.00%* | *0.00%* | ***26.00%*** | ***8.00%*** | ***14.00%*** | *0.00%* | *0.00%* | *0.00%* | *0.00%* | *0.00%* | *0.00%* | *0.00%* |
| *Percent Residential Trips Generated(Exiting)* | *0.00%* | *0.00%* | *0.00%* | ***33.00%*** | *0.00%* | *0.00%* | ***26.00%*** | *0.00%* | ***7.00%*** | *0.00%* | *0.00%* | *0.00%* |
| *Percent Commercial Trips Generated(Entering)* | *0.00%* | *0.00%* | *0.00%* | *0.00%* | ***22.00%*** | *0.00%* | *0.00%* | *0.00%* | *0.00%* | *0.00%* | *0.00%* | *0.00%* |
| *Percent Commercial Trips Generated(Exiting)* | *0.00%* | ***22.00%*** | *0.00%* | *0.00%* | *0.00%* | *0.00%* | *0.00%* | *0.00%* | *0.00%* | *0.00%* | *0.00%* | *0.00%* |
| *Percent Office Trips Generated(Entering)* | *0.00%* | *0.00%* | *0.00%* | *0.00%* | ***15.00%*** | *0.00%* | *0.00%* | *0.00%* | *0.00%* | *0.00%* | *0.00%* | *0.00%* |
| *Percent Office Trips Generated(Exiting)* | *0.00%* | ***15.00%*** | *0.00%* | *0.00%* | *0.00%* | *0.00%* | *0.00%* | *0.00%* | *0.00%* | *0.00%* | *0.00%* | *0.00%* |
| Total Trips Generated | 0 | 46 | 46 | 49 | 51 | 0 | 27 | 0 | 7 | 0 | 0 | 0 |
| **Total PM Peak Hour BUILD Volumes** | **0** | **380** | **46** | **49** | **411** | **0** | **27** | **0** | **7** | **0** | **0** | **0** |

| | Entering | Exiting | | |
|---|---|---|---|---|
| Number of Residential Trips Generated | **126** | **44** | A.M. | |
| | **177** | **105** | P.M. | |
| Number of Commercial Trips Generated | **94** | **87** | A.M. | 100% Commercial Development |
| | **49** | **49** | P.M. | |
| Number of Office Trips Generated | **175** | **46** | A.M. | 100% Office Development |
| | **98** | **231** | P.M. | |

2035
**NO BUILD**

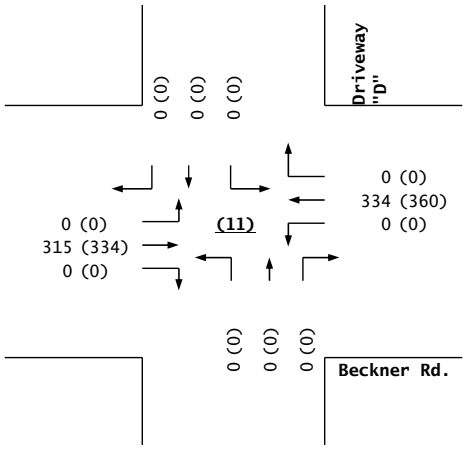


**Trips**

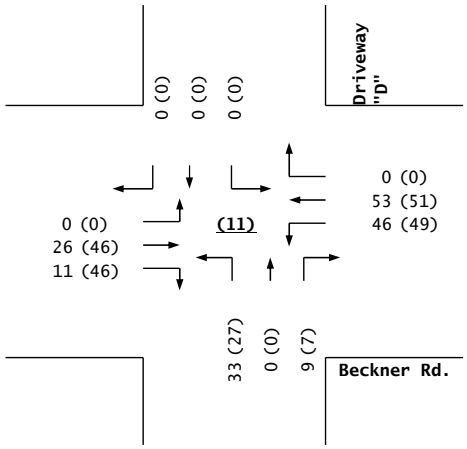


2035
**BUILD**

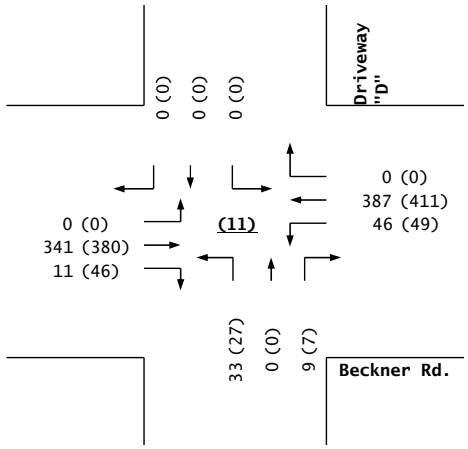


**Beckner Rd. / Driveway "D"**

| Lane Group | EBL | EBT | EBR | WBL | WBT | WBR | NBL | NBT | SBL | SBT | SBR |
|---|---|---|---|---|---|---|---|---|---|---|---|
| Lane Configurations | | | | | | | | | | | |
| Traffic Volume (vph) | 302 | 61 | 70 | 74 | 30 | 21 | 70 | 1149 | 23 | 725 | 153 |
| Future Volume (vph) | 302 | 61 | 70 | 74 | 30 | 21 | 70 | 1149 | 23 | 725 | 153 |
| Turn Type | pm+pt | NA | Free | pm+pt | NA | Perm | pm+pt | NA | pm+pt | NA | Free |
| Protected Phases | 7 | 4 | | 3 | 8 | | 5 | 2 | 1 | 6 | |
| Permitted Phases | 4 | | Free | 8 | | 8 | 2 | | 6 | | Free |
| Detector Phase | 7 | 4 | | 3 | 8 | 8 | 5 | 2 | 1 | 6 | |
| Switch Phase | | | | | | | | | | | |
| Minimum Initial (s) | 30.0 | 25.0 | | 20.0 | 15.0 | 15.0 | 15.0 | 30.0 | 15.0 | 30.0 | |
| Minimum Split (s) | 35.0 | 45.0 | | 35.0 | 30.0 | 30.0 | 30.0 | 35.0 | 20.0 | 35.0 | |
| Total Split (s) | 40.0 | 50.0 | | 40.0 | 50.0 | 50.0 | 35.0 | 50.0 | 25.0 | 40.0 | |
| Total Split (%) | 24.2% | 30.3% | | 24.2% | 30.3% | 30.3% | 21.2% | 30.3% | 15.2% | 24.2% | |
| Yellow Time (s) | 4.0 | 4.0 | | 4.0 | 4.0 | 4.0 | 4.0 | 4.0 | 4.0 | 4.0 | |
| All-Red Time (s) | 1.0 | 1.0 | | 1.0 | 1.0 | 1.0 | 1.0 | 1.0 | 1.0 | 1.0 | |
| Lost Time Adjust (s) | 0.0 | 0.0 | | 0.0 | 0.0 | 0.0 | 0.0 | 0.0 | 0.0 | 0.0 | |
| Total Lost Time (s) | 5.0 | 5.0 | | 5.0 | 5.0 | 5.0 | 5.0 | 5.0 | 5.0 | 5.0 | |
| Lead/Lag | Lead | Lag | | Lead | Lag | Lag | Lead | Lag | Lead | Lag | |
| Lead-Lag Optimize? | | | | | | | | | | | |
| Recall Mode | None | None | | None | None | None | None | C-Max | None | C-Max | |

**Intersection Summary**

Cycle Length: 165
Actuated Cycle Length: 165
Offset: 0 (0%), Referenced to phase 2:NBTL and 6:SBTL, Start of Green
Natural Cycle: 145
Control Type: Actuated-Coordinated

Splits and Phases: 1: Cerrillos Rd. & Beckner Rd.

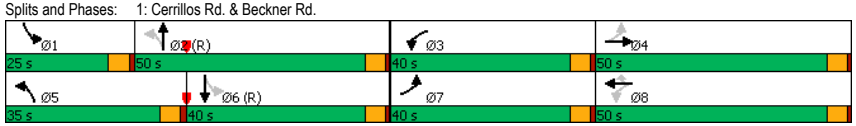






| Movement | EBL | EBT | EBR | WBL | WBT | WBR | NBL | NBT | NBR | SBL | SBT | SBR |
|---|---|---|---|---|---|---|---|---|---|---|---|---|
| Lane Configurations | | | | | | | | | | | | |
| Traffic Volume (veh/h) | 302 | 61 | 70 | 74 | 30 | 21 | 70 | 1149 | 132 | 23 | 725 | 153 |
| Future Volume (veh/h) | 302 | 61 | 70 | 74 | 30 | 21 | 70 | 1149 | 132 | 23 | 725 | 153 |
| Initial Q (Qb), veh | 0 | 0 | 0 | 0 | 0 | 0 | 0 | 0 | 0 | 0 | 0 | 0 |
| Ped-Bike Adj(A_pbT) | 1.00 | | 1.00 | 1.00 | | 1.00 | 1.00 | | 1.00 | 1.00 | | 1.00 |
| Parking Bus, Adj | 1.00 | 1.00 | 1.00 | 1.00 | 1.00 | 1.00 | 1.00 | 1.00 | 1.00 | 1.00 | 1.00 | 1.00 |
| Work Zone On Approach | | No | | | No | | | No | | | No | |
| Adj Sat Flow, veh/h/ln | 1870 | 1870 | 1870 | 1870 | 1870 | 1870 | 1870 | 1870 | 1870 | 1870 | 1870 | 1870 |
| Adj Flow Rate, veh/h | 351 | 71 | 0 | 86 | 35 | 24 | 81 | 1336 | 153 | 27 | 843 | 0 |
| Peak Hour Factor | 0.86 | 0.86 | 0.86 | 0.86 | 0.86 | 0.86 | 0.86 | 0.86 | 0.86 | 0.86 | 0.86 | 0.86 |
| Percent Heavy Veh, % | 2 | 2 | 2 | 2 | 2 | 2 | 2 | 2 | 2 | 2 | 2 | 2 |
| Cap, veh/h | 479 | 301 | | 376 | 170 | 144 | 535 | 2485 | 285 | 281 | 1814 | |
| Arrive On Green | 0.19 | 0.16 | 0.00 | 0.12 | 0.09 | 0.09 | 0.09 | 0.53 | 0.53 | 0.13 | 1.00 | 0.00 |
| Sat Flow, veh/h | 1781 | 1870 | 1585 | 1781 | 1870 | 1585 | 1781 | 4647 | 532 | 1781 | 3554 | 1585 |
| Grp Volume(v), veh/h | 351 | 71 | 0 | 86 | 35 | 24 | 81 | 979 | 510 | 27 | 843 | 0 |
| Grp Sat Flow(s),veh/h/ln | 1781 | 1870 | 1585 | 1781 | 1870 | 1585 | 1781 | 1702 | 1775 | 1781 | 1777 | 1585 |
| Q Serve(g_s), s | 28.7 | 5.5 | 0.0 | 6.6 | 2.9 | 2.3 | 3.1 | 31.0 | 31.0 | 1.0 | 0.0 | 0.0 |
| Cycle Q Clear(g_c), s | 28.7 | 5.5 | 0.0 | 6.6 | 2.9 | 2.3 | 3.1 | 31.0 | 31.0 | 1.0 | 0.0 | 0.0 |
| Prop In Lane | 1.00 | | 1.00 | 1.00 | | 1.00 | 1.00 | | 0.30 | 1.00 | | 1.00 |
| Lane Grp Cap(c), veh/h | 479 | 301 | | 376 | 170 | 144 | 535 | 1820 | 949 | 281 | 1814 | |
| V/C Ratio(X) | 0.73 | 0.24 | | 0.23 | 0.21 | 0.17 | 0.15 | 0.54 | 0.54 | 0.10 | 0.46 | |
| Avail Cap(c_a), veh/h | 520 | 510 | | 542 | 510 | 432 | 701 | 1820 | 949 | 382 | 1814 | |
| HCM Platoon Ratio | 1.00 | 1.00 | 1.00 | 1.00 | 1.00 | 1.00 | 1.00 | 1.00 | 1.00 | 2.00 | 2.00 | 2.00 |
| Upstream Filter(I) | 1.00 | 1.00 | 0.00 | 1.00 | 1.00 | 1.00 | 1.00 | 1.00 | 1.00 | 0.90 | 0.90 | 0.00 |
| Uniform Delay (d), s/veh | 51.7 | 60.4 | 0.0 | 54.1 | 69.5 | 69.2 | 13.5 | 25.1 | 25.1 | 16.3 | 0.0 | 0.0 |
| Incr Delay (d2), s/veh | 4.9 | 0.4 | 0.0 | 0.3 | 0.6 | 0.5 | 0.1 | 1.1 | 2.2 | 0.1 | 0.8 | 0.0 |
| Initial Q Delay(d3),s/veh | 0.0 | 0.0 | 0.0 | 0.0 | 0.0 | 0.0 | 0.0 | 0.0 | 0.0 | 0.0 | 0.0 | 0.0 |
| %ile BackOfQ(50%),veh/ln | 13.3 | 2.6 | 0.0 | 3.0 | 1.4 | 1.0 | 1.2 | 12.5 | 13.3 | 0.4 | 0.2 | 0.0 |
| Unsig. Movement Delay, s/veh | | | | | | | | | | | | |
| LnGrp Delay(d),s/veh | 56.5 | 60.8 | 0.0 | 54.4 | 70.1 | 69.8 | 13.6 | 26.2 | 27.3 | 16.4 | 0.8 | 0.0 |
| LnGrp LOS | E | E | | D | E | E | B | C | C | B | A | |
| Approach Vol, veh/h | | 422 | | | 145 | | | 1570 | | | 870 | |
| Approach Delay, s/veh | | 57.2 | | | 60.8 | | | 25.9 | | | 1.3 | |
| Approach LOS | | E | | | E | | | C | | | A | |

| Timer - Assigned Phs | 1 | 2 | 3 | 4 | 5 | 6 | 7 | 8 |
|---|---|---|---|---|---|---|---|---|
| Phs Duration (G+Y+Rc), s | 15.6 | 93.2 | 24.6 | 31.5 | 19.6 | 89.2 | 36.1 | 20.0 |
| Change Period (Y+Rc), s | 5.0 | 5.0 | 5.0 | 5.0 | 5.0 | 5.0 | 5.0 | 5.0 |
| Max Green Setting (Gmax), s | 20.0 | 45.0 | 35.0 | 45.0 | 30.0 | 35.0 | 35.0 | 45.0 |
| Max Q Clear Time (g_c+I1), s | 3.0 | 33.0 | 8.6 | 7.5 | 5.1 | 2.0 | 30.7 | 4.9 |
| Green Ext Time (p_c), s | 0.0 | 7.1 | 0.2 | 0.3 | 0.2 | 6.1 | 0.4 | 0.2 |

**Intersection Summary**

| | |
|---|---|
| HCM 6th Ctrl Delay | 24.8 |
| HCM 6th LOS | C |

**Notes**

Unsignalized Delay for [EBR, SBR] is excluded from calculations of the approach delay and intersection delay.

| Lane Group | EBL | EBT | EBR | WBL | WBT | WBR | NBL | NBT | SBL | SBT | SBR |
|---|---|---|---|---|---|---|---|---|---|---|---|
| Lane Configurations | | | | | | | | | | | |
| Traffic Volume (vph) | 376 | 113 | 78 | 203 | 72 | 50 | 77 | 1254 | 45 | 778 | 159 |
| Future Volume (vph) | 376 | 113 | 78 | 203 | 72 | 50 | 77 | 1254 | 45 | 778 | 159 |
| Turn Type | pm+pt | NA | Free | pm+pt | NA | Perm | pm+pt | NA | pm+pt | NA | Free |
| Protected Phases | 7 | 4 | | 3 | 8 | | 5 | 2 | 1 | 6 | |
| Permitted Phases | 4 | | Free | 8 | | 8 | 2 | | 6 | | Free |
| Detector Phase | 7 | 4 | | 3 | 8 | 8 | 5 | 2 | 1 | 6 | |
| Switch Phase | | | | | | | | | | | |
| Minimum Initial (s) | 30.0 | 25.0 | | 20.0 | 15.0 | 15.0 | 15.0 | 30.0 | 15.0 | 30.0 | |
| Minimum Split (s) | 35.0 | 45.0 | | 35.0 | 30.0 | 30.0 | 30.0 | 35.0 | 20.0 | 35.0 | |
| Total Split (s) | 40.0 | 50.0 | | 40.0 | 50.0 | 50.0 | 35.0 | 50.0 | 25.0 | 40.0 | |
| Total Split (%) | 24.2% | 30.3% | | 24.2% | 30.3% | 30.3% | 21.2% | 30.3% | 15.2% | 24.2% | |
| Yellow Time (s) | 4.0 | 4.0 | | 4.0 | 4.0 | 4.0 | 4.0 | 4.0 | 4.0 | 4.0 | |
| All-Red Time (s) | 1.0 | 1.0 | | 1.0 | 1.0 | 1.0 | 1.0 | 1.0 | 1.0 | 1.0 | |
| Lost Time Adjust (s) | 0.0 | 0.0 | | 0.0 | 0.0 | 0.0 | 0.0 | 0.0 | 0.0 | 0.0 | |
| Total Lost Time (s) | 5.0 | 5.0 | | 5.0 | 5.0 | 5.0 | 5.0 | 5.0 | 5.0 | 5.0 | |
| Lead/Lag | Lead | Lag | | Lead | Lag | Lag | Lead | Lag | Lead | Lag | |
| Lead-Lag Optimize? | | | | | | | | | | | |
| Recall Mode | None | None | | None | None | None | None | C-Max | None | C-Max | |

**Intersection Summary**

Cycle Length: 165
Actuated Cycle Length: 165
Offset: 0 (0%), Referenced to phase 2:NBTL and 6:SBTL, Start of Green
Natural Cycle: 145
Control Type: Actuated-Coordinated

Splits and Phases: 1: Cerrillos Rd. & Beckner Rd.

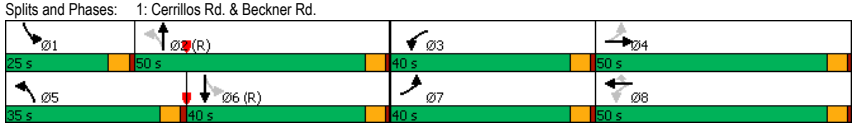






| Movement | EBL | EBT | EBR | WBL | WBT | WBR | NBL | NBT | NBR | SBL | SBT | SBR |
|---|---|---|---|---|---|---|---|---|---|---|---|---|
| Lane Configurations | | | | | | | | | | | | |
| Traffic Volume (veh/h) | 376 | 113 | 78 | 203 | 72 | 50 | 77 | 1254 | 272 | 45 | 778 | 159 |
| Future Volume (veh/h) | 376 | 113 | 78 | 203 | 72 | 50 | 77 | 1254 | 272 | 45 | 778 | 159 |
| Initial Q (Qb), veh | 0 | 0 | 0 | 0 | 0 | 0 | 0 | 0 | 0 | 0 | 0 | 0 |
| Ped-Bike Adj(A_pbT) | 1.00 | | 1.00 | 1.00 | | 1.00 | 1.00 | | 1.00 | 1.00 | | 1.00 |
| Parking Bus, Adj | 1.00 | 1.00 | 1.00 | 1.00 | 1.00 | 1.00 | 1.00 | 1.00 | 1.00 | 1.00 | 1.00 | 1.00 |
| Work Zone On Approach | | No | | | No | | | No | | | No | |
| Adj Sat Flow, veh/h/ln | 1870 | 1870 | 1870 | 1870 | 1870 | 1870 | 1870 | 1870 | 1870 | 1870 | 1870 | 1870 |
| Adj Flow Rate, veh/h | 437 | 131 | 0 | 236 | 84 | 58 | 90 | 1458 | 316 | 52 | 905 | 0 |
| Peak Hour Factor | 0.86 | 0.86 | 0.86 | 0.86 | 0.86 | 0.86 | 0.86 | 0.86 | 0.86 | 0.86 | 0.86 | 0.86 |
| Percent Heavy Veh, % | 2 | 2 | 2 | 2 | 2 | 2 | 2 | 2 | 2 | 2 | 2 | 2 |
| Cap, veh/h | 482 | 317 | | 396 | 170 | 144 | 494 | 2073 | 448 | 250 | 1728 | |
| Arrive On Green | 0.21 | 0.17 | 0.00 | 0.13 | 0.09 | 0.09 | 0.09 | 0.49 | 0.49 | 0.17 | 0.97 | 0.00 |
| Sat Flow, veh/h | 1781 | 1870 | 1585 | 1781 | 1870 | 1585 | 1781 | 4203 | 908 | 1781 | 3554 | 1585 |
| Grp Volume(v), veh/h | 437 | 131 | 0 | 236 | 84 | 58 | 90 | 1180 | 594 | 52 | 905 | 0 |
| Grp Sat Flow(s),veh/h/ln | 1781 | 1870 | 1585 | 1781 | 1870 | 1585 | 1781 | 1702 | 1707 | 1781 | 1777 | 1585 |
| Q Serve(g_s), s | 35.0 | 10.3 | 0.0 | 19.5 | 7.1 | 5.7 | 3.7 | 44.4 | 44.6 | 2.0 | 2.3 | 0.0 |
| Cycle Q Clear(g_c), s | 35.0 | 10.3 | 0.0 | 19.5 | 7.1 | 5.7 | 3.7 | 44.4 | 44.6 | 2.0 | 2.3 | 0.0 |
| Prop In Lane | 1.00 | | 1.00 | 1.00 | | 1.00 | 1.00 | | 0.53 | 1.00 | | 1.00 |
| Lane Grp Cap(c), veh/h | 482 | 317 | | 396 | 170 | 144 | 494 | 1679 | 842 | 250 | 1728 | |
| V/C Ratio(X) | 0.91 | 0.41 | | 0.60 | 0.49 | 0.40 | 0.18 | 0.70 | 0.71 | 0.21 | 0.52 | |
| Avail Cap(c_a), veh/h | 482 | 510 | | 536 | 510 | 432 | 658 | 1679 | 842 | 319 | 1728 | |
| HCM Platoon Ratio | 1.00 | 1.00 | 1.00 | 1.00 | 1.00 | 1.00 | 1.00 | 1.00 | 1.00 | 2.00 | 2.00 | 2.00 |
| Upstream Filter(I) | 1.00 | 1.00 | 0.00 | 1.00 | 1.00 | 1.00 | 1.00 | 1.00 | 1.00 | 0.86 | 0.86 | 0.00 |
| Uniform Delay (d), s/veh | 52.1 | 61.2 | 0.0 | 57.2 | 71.4 | 70.8 | 15.7 | 32.4 | 32.5 | 20.7 | 1.2 | 0.0 |
| Incr Delay (d2), s/veh | 20.9 | 0.9 | 0.0 | 1.4 | 2.2 | 1.8 | 0.2 | 2.5 | 4.9 | 0.3 | 1.0 | 0.0 |
| Initial Q Delay(d3),s/veh | 0.0 | 0.0 | 0.0 | 0.0 | 0.0 | 0.0 | 0.0 | 0.0 | 0.0 | 0.0 | 0.0 | 0.0 |
| %ile BackOfQ(95%),veh/ln | 26.0 | 8.6 | 0.0 | 13.7 | 6.2 | 4.3 | 2.7 | 25.4 | 26.3 | 1.5 | 1.3 | 0.0 |
| Unsig. Movement Delay, s/veh | | | | | | | | | | | | |
| LnGrp Delay(d),s/veh | 73.0 | 62.1 | 0.0 | 58.6 | 73.6 | 72.6 | 15.8 | 34.9 | 37.4 | 21.0 | 2.2 | 0.0 |
| LnGrp LOS | E | E | | E | E | E | B | C | D | C | A | |
| Approach Vol, veh/h | | 568 | | | 378 | | | 1864 | | | 957 | |
| Approach Delay, s/veh | | 70.5 | | | 64.1 | | | 34.8 | | | 3.2 | |
| Approach LOS | | E | | | E | | | C | | | A | |

| Timer - Assigned Phs | 1 | 2 | 3 | 4 | 5 | 6 | 7 | 8 |
|---|---|---|---|---|---|---|---|---|
| Phs Duration (G+Y+Rc), s | 18.6 | 86.4 | 27.1 | 32.9 | 19.8 | 85.2 | 40.0 | 20.0 |
| Change Period (Y+Rc), s | 5.0 | 5.0 | 5.0 | 5.0 | 5.0 | 5.0 | 5.0 | 5.0 |
| Max Green Setting (Gmax), s | 20.0 | 45.0 | 35.0 | 45.0 | 30.0 | 35.0 | 35.0 | 45.0 |
| Max Q Clear Time (g_c+I1), s | 4.0 | 46.6 | 21.5 | 12.3 | 5.7 | 4.3 | 37.0 | 9.1 |
| Green Ext Time (p_c), s | 0.1 | 0.0 | 0.5 | 0.6 | 0.2 | 6.6 | 0.0 | 0.6 |

**Intersection Summary**

| | |
|---|---|
| HCM 6th Ctrl Delay | 35.1 |
| HCM 6th LOS | D |

**Notes**

Unsignalized Delay for [EBR, SBR] is excluded from calculations of the approach delay and intersection delay.

| Lane Group | EBL | EBT | EBR | WBL | WBT | WBR | NBL | NBT | SBL | SBT | SBR |
|---|---|---|---|---|---|---|---|---|---|---|---|
| Lane Configurations | | | | | | | | | | | |
| Traffic Volume (vph) | 376 | 113 | 78 | 203 | 72 | 50 | 77 | 1254 | 45 | 778 | 159 |
| Future Volume (vph) | 376 | 113 | 78 | 203 | 72 | 50 | 77 | 1254 | 45 | 778 | 159 |
| Turn Type | Prot | NA | Free | Prot | NA | pm+ov | pm+pt | NA | pm+pt | NA | Free |
| Protected Phases | 7 | 4 | | 3 | 8 | 1 | 5 | 2 | 1 | 6 | |
| Permitted Phases | | | Free | | | 8 | 2 | | 6 | | Free |
| Detector Phase | 7 | 4 | | 3 | 8 | 1 | 5 | 2 | 1 | 6 | |
| Switch Phase | | | | | | | | | | | |
| Minimum Initial (s) | 30.0 | 25.0 | | 20.0 | 15.0 | 15.0 | 15.0 | 30.0 | 15.0 | 30.0 | |
| Minimum Split (s) | 35.0 | 45.0 | | 35.0 | 30.0 | 20.0 | 30.0 | 35.0 | 20.0 | 35.0 | |
| Total Split (s) | 35.0 | 45.0 | | 35.0 | 45.0 | 20.0 | 30.0 | 65.0 | 20.0 | 55.0 | |
| Total Split (%) | 21.2% | 27.3% | | 21.2% | 27.3% | 12.1% | 18.2% | 39.4% | 12.1% | 33.3% | |
| Yellow Time (s) | 4.0 | 4.0 | | 4.0 | 4.0 | 4.0 | 4.0 | 4.0 | 4.0 | 4.0 | |
| All-Red Time (s) | 1.0 | 1.0 | | 1.0 | 1.0 | 1.0 | 1.0 | 1.0 | 1.0 | 1.0 | |
| Lost Time Adjust (s) | 0.0 | 0.0 | | 0.0 | 0.0 | 0.0 | 0.0 | 0.0 | 0.0 | 0.0 | |
| Total Lost Time (s) | 5.0 | 5.0 | | 5.0 | 5.0 | 5.0 | 5.0 | 5.0 | 5.0 | 5.0 | |
| Lead/Lag | Lead | Lag | | Lead | Lag | Lead | Lead | Lag | Lead | Lag | |
| Lead-Lag Optimize? | | | | | | | | | | | |
| Recall Mode | None | None | | None | None | None | None | C-Max | None | C-Max | |

**Intersection Summary**

Cycle Length: 165
Actuated Cycle Length: 165
Offset: 0 (0%), Referenced to phase 2:NBTL and 6:SBTL, Start of Green
Natural Cycle: 145
Control Type: Actuated-Coordinated

Splits and Phases: 1: Cerrillos Rd. & Beckner Rd.

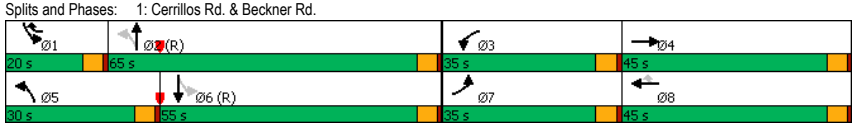






| Movement | EBL | EBT | EBR | WBL | WBT | WBR | NBL | NBT | NBR | SBL | SBT | SBR |
|---|---|---|---|---|---|---|---|---|---|---|---|---|
| Lane Configurations | | | | | | | | | | | | |
| Traffic Volume (veh/h) | 376 | 113 | 78 | 203 | 72 | 50 | 77 | 1254 | 272 | 45 | 778 | 159 |
| Future Volume (veh/h) | 376 | 113 | 78 | 203 | 72 | 50 | 77 | 1254 | 272 | 45 | 778 | 159 |
| Initial Q (Qb), veh | 0 | 0 | 0 | 0 | 0 | 0 | 0 | 0 | 0 | 0 | 0 | 0 |
| Ped-Bike Adj(A_pbT) | 1.00 | | 1.00 | 1.00 | | 1.00 | 1.00 | | 1.00 | 1.00 | | 1.00 |
| Parking Bus, Adj | 1.00 | 1.00 | 1.00 | 1.00 | 1.00 | 1.00 | 1.00 | 1.00 | 1.00 | 1.00 | 1.00 | 1.00 |
| Work Zone On Approach | | No | | | No | | | No | | | No | |
| Adj Sat Flow, veh/h/ln | 1870 | 1870 | 1870 | 1870 | 1870 | 1870 | 1870 | 1870 | 1870 | 1870 | 1870 | 1870 |
| Adj Flow Rate, veh/h | 437 | 131 | 0 | 236 | 84 | 58 | 90 | 1458 | 316 | 52 | 905 | 0 |
| Peak Hour Factor | 0.86 | 0.86 | 0.86 | 0.86 | 0.86 | 0.86 | 0.86 | 0.86 | 0.86 | 0.86 | 0.86 | 0.86 |
| Percent Heavy Veh, % | 2 | 2 | 2 | 2 | 2 | 2 | 2 | 2 | 2 | 2 | 2 | 2 |
| Cap, veh/h | 628 | 283 | | 419 | 170 | 275 | 521 | 2200 | 475 | 263 | 1836 | |
| Arrive On Green | 0.18 | 0.15 | 0.00 | 0.12 | 0.09 | 0.09 | 0.09 | 0.52 | 0.52 | 0.17 | 1.00 | 0.00 |
| Sat Flow, veh/h | 3456 | 1870 | 1585 | 3456 | 1870 | 1585 | 1781 | 4203 | 908 | 1781 | 3554 | 1585 |
| Grp Volume(v), veh/h | 437 | 131 | 0 | 236 | 84 | 58 | 90 | 1180 | 594 | 52 | 905 | 0 |
| Grp Sat Flow(s),veh/h/ln | 1728 | 1870 | 1585 | 1728 | 1870 | 1585 | 1781 | 1702 | 1707 | 1781 | 1777 | 1585 |
| Q Serve(g_s), s | 19.5 | 10.5 | 0.0 | 10.6 | 7.1 | 5.2 | 3.5 | 41.7 | 42.0 | 1.9 | 0.0 | 0.0 |
| Cycle Q Clear(g_c), s | 19.5 | 10.5 | 0.0 | 10.6 | 7.1 | 5.2 | 3.5 | 41.7 | 42.0 | 1.9 | 0.0 | 0.0 |
| Prop In Lane | 1.00 | | 1.00 | 1.00 | | 1.00 | 1.00 | | 0.53 | 1.00 | | 1.00 |
| Lane Grp Cap(c), veh/h | 628 | 283 | | 419 | 170 | 275 | 521 | 1782 | 894 | 263 | 1836 | |
| V/C Ratio(X) | 0.70 | 0.46 | | 0.56 | 0.49 | 0.21 | 0.17 | 0.66 | 0.66 | 0.20 | 0.49 | |
| Avail Cap(c_a), veh/h | 628 | 453 | | 628 | 453 | 515 | 632 | 1782 | 894 | 278 | 1836 | |
| HCM Platoon Ratio | 1.00 | 1.00 | 1.00 | 1.00 | 1.00 | 1.00 | 1.00 | 1.00 | 1.00 | 2.00 | 2.00 | 2.00 |
| Upstream Filter(I) | 1.00 | 1.00 | 0.00 | 1.00 | 1.00 | 1.00 | 1.00 | 1.00 | 1.00 | 0.89 | 0.89 | 0.00 |
| Uniform Delay (d), s/veh | 63.2 | 63.9 | 0.0 | 68.4 | 71.4 | 58.5 | 13.5 | 28.7 | 28.7 | 18.0 | 0.0 | 0.0 |
| Incr Delay (d2), s/veh | 3.3 | 1.2 | 0.0 | 1.2 | 2.2 | 0.4 | 0.2 | 2.0 | 3.9 | 0.3 | 0.8 | 0.0 |
| Initial Q Delay(d3),s/veh | 0.0 | 0.0 | 0.0 | 0.0 | 0.0 | 0.0 | 0.0 | 0.0 | 0.0 | 0.0 | 0.0 | 0.0 |
| %ile BackOfQ(95%),veh/ln | 13.6 | 8.8 | 0.0 | 8.3 | 6.2 | 3.8 | 2.5 | 23.8 | 24.5 | 1.3 | 0.4 | 0.0 |
| Unsig. Movement Delay, s/veh | | | | | | | | | | | | |
| LnGrp Delay(d),s/veh | 66.6 | 65.0 | 0.0 | 69.6 | 73.6 | 58.9 | 13.6 | 30.6 | 32.6 | 18.3 | 0.8 | 0.0 |
| LnGrp LOS | E | E | | E | E | E | B | C | C | B | A | |
| Approach Vol, veh/h | | 568 | | | 378 | | | 1864 | | | 957 | |
| Approach Delay, s/veh | | 66.2 | | | 68.8 | | | 30.4 | | | 1.8 | |
| Approach LOS | | E | | | E | | | C | | | A | |

| Timer - Assigned Phs | 1 | 2 | 3 | 4 | 5 | 6 | 7 | 8 |
|---|---|---|---|---|---|---|---|---|
| Phs Duration (G+Y+Rc), s | 18.6 | 91.4 | 25.0 | 30.0 | 19.8 | 90.2 | 35.0 | 20.0 |
| Change Period (Y+Rc), s | 5.0 | 5.0 | 5.0 | 5.0 | 5.0 | 5.0 | 5.0 | 5.0 |
| Max Green Setting (Gmax), s | 15.0 | 60.0 | 30.0 | 40.0 | 25.0 | 50.0 | 30.0 | 40.0 |
| Max Q Clear Time (g_c+I1), s | 3.9 | 44.0 | 12.6 | 12.5 | 5.5 | 2.0 | 21.5 | 9.1 |
| Green Ext Time (p_c), s | 0.1 | 10.2 | 0.7 | 0.6 | 0.2 | 7.0 | 1.0 | 0.6 |

**Intersection Summary**

| | |
|---|---|
| HCM 6th Ctrl Delay | 32.4 |
| HCM 6th LOS | C |

**Notes**

Unsignalized Delay for [EBR, SBR] is excluded from calculations of the approach delay and intersection delay.

| Lane Group | EBL | EBT | EBR | WBL | WBT | WBR | NBL | NBT | SBL | SBT | SBR |
|---|---|---|---|---|---|---|---|---|---|---|---|
| Lane Configurations | | | | | | | | | | | |
| Traffic Volume (vph) | 376 | 116 | 78 | 227 | 74 | 101 | 77 | 1254 | 108 | 778 | 159 |
| Future Volume (vph) | 376 | 116 | 78 | 227 | 74 | 101 | 77 | 1254 | 108 | 778 | 159 |
| Turn Type | pm+pt | NA | Free | pm+pt | NA | Perm | pm+pt | NA | pm+pt | NA | Free |
| Protected Phases | 7 | 4 | | 3 | 8 | | 5 | 2 | 1 | 6 | |
| Permitted Phases | 4 | | Free | 8 | | 8 | 2 | | 6 | | Free |
| Detector Phase | 7 | 4 | | 3 | 8 | 8 | 5 | 2 | 1 | 6 | |
| Switch Phase | | | | | | | | | | | |
| Minimum Initial (s) | 30.0 | 25.0 | | 20.0 | 15.0 | 15.0 | 15.0 | 30.0 | 15.0 | 30.0 | |
| Minimum Split (s) | 35.0 | 45.0 | | 35.0 | 30.0 | 30.0 | 30.0 | 35.0 | 20.0 | 35.0 | |
| Total Split (s) | 40.0 | 50.0 | | 40.0 | 50.0 | 50.0 | 35.0 | 50.0 | 25.0 | 40.0 | |
| Total Split (%) | 24.2% | 30.3% | | 24.2% | 30.3% | 30.3% | 21.2% | 30.3% | 15.2% | 24.2% | |
| Yellow Time (s) | 4.0 | 4.0 | | 4.0 | 4.0 | 4.0 | 4.0 | 4.0 | 4.0 | 4.0 | |
| All-Red Time (s) | 1.0 | 1.0 | | 1.0 | 1.0 | 1.0 | 1.0 | 1.0 | 1.0 | 1.0 | |
| Lost Time Adjust (s) | 0.0 | 0.0 | | 0.0 | 0.0 | 0.0 | 0.0 | 0.0 | 0.0 | 0.0 | |
| Total Lost Time (s) | 5.0 | 5.0 | | 5.0 | 5.0 | 5.0 | 5.0 | 5.0 | 5.0 | 5.0 | |
| Lead/Lag | Lead | Lag | | Lead | Lag | Lag | Lead | Lag | Lead | Lag | |
| Lead-Lag Optimize? | | | | | | | | | | | |
| Recall Mode | None | None | | None | None | None | None | C-Max | None | C-Max | |

**Intersection Summary**

Cycle Length: 165
Actuated Cycle Length: 165
Offset: 0 (0%), Referenced to phase 2:NBTL and 6:SBTL, Start of Green
Natural Cycle: 145
Control Type: Actuated-Coordinated

Splits and Phases: 1: Cerrillos Rd. & Beckner Rd.

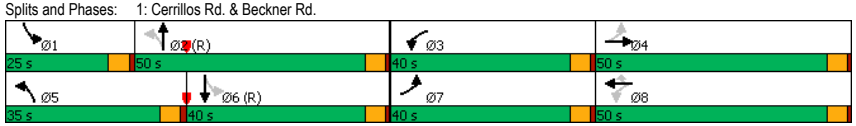






| Movement | EBL | EBT | EBR | WBL | WBT | WBR | NBL | NBT | NBR | SBL | SBT | SBR |
|---|---|---|---|---|---|---|---|---|---|---|---|---|
| Lane Configurations | | | | | | | | | | | | |
| Traffic Volume (veh/h) | 376 | 116 | 78 | 227 | 74 | 101 | 77 | 1254 | 307 | 108 | 778 | 159 |
| Future Volume (veh/h) | 376 | 116 | 78 | 227 | 74 | 101 | 77 | 1254 | 307 | 108 | 778 | 159 |
| Initial Q (Qb), veh | 0 | 0 | 0 | 0 | 0 | 0 | 0 | 0 | 0 | 0 | 0 | 0 |
| Ped-Bike Adj(A_pbT) | 1.00 | | 1.00 | 1.00 | | 1.00 | 1.00 | | 1.00 | 1.00 | | 1.00 |
| Parking Bus, Adj | 1.00 | 1.00 | 1.00 | 1.00 | 1.00 | 1.00 | 1.00 | 1.00 | 1.00 | 1.00 | 1.00 | 1.00 |
| Work Zone On Approach | | No | | | No | | | No | | | No | |
| Adj Sat Flow, veh/h/ln | 1870 | 1870 | 1870 | 1870 | 1870 | 1870 | 1870 | 1870 | 1870 | 1870 | 1870 | 1870 |
| Adj Flow Rate, veh/h | 437 | 135 | 0 | 264 | 86 | 117 | 90 | 1458 | 357 | 126 | 905 | 0 |
| Peak Hour Factor | 0.86 | 0.86 | 0.86 | 0.86 | 0.86 | 0.86 | 0.86 | 0.86 | 0.86 | 0.86 | 0.86 | 0.86 |
| Percent Heavy Veh, % | 2 | 2 | 2 | 2 | 2 | 2 | 2 | 2 | 2 | 2 | 2 | 2 |
| Cap, veh/h | 477 | 290 | | 419 | 170 | 144 | 494 | 1987 | 484 | 256 | 1728 | |
| Arrive On Green | 0.21 | 0.16 | 0.00 | 0.15 | 0.09 | 0.09 | 0.09 | 0.49 | 0.49 | 0.18 | 0.97 | 0.00 |
| Sat Flow, veh/h | 1781 | 1870 | 1585 | 1781 | 1870 | 1585 | 1781 | 4096 | 998 | 1781 | 3554 | 1585 |
| Grp Volume(v), veh/h | 437 | 135 | 0 | 264 | 86 | 117 | 90 | 1210 | 605 | 126 | 905 | 0 |
| Grp Sat Flow(s),veh/h/ln | 1781 | 1870 | 1585 | 1781 | 1870 | 1585 | 1781 | 1702 | 1691 | 1781 | 1777 | 1585 |
| Q Serve(g_s), s | 35.0 | 10.8 | 0.0 | 21.9 | 7.2 | 12.0 | 3.7 | 46.9 | 47.3 | 5.2 | 2.3 | 0.0 |
| Cycle Q Clear(g_c), s | 35.0 | 10.8 | 0.0 | 21.9 | 7.2 | 12.0 | 3.7 | 46.9 | 47.3 | 5.2 | 2.3 | 0.0 |
| Prop In Lane | 1.00 | | 1.00 | 1.00 | | 1.00 | 1.00 | | 0.59 | 1.00 | | 1.00 |
| Lane Grp Cap(c), veh/h | 477 | 290 | | 419 | 170 | 144 | 494 | 1651 | 820 | 256 | 1728 | |
| V/C Ratio(X) | 0.92 | 0.47 | | 0.63 | 0.51 | 0.81 | 0.18 | 0.73 | 0.74 | 0.49 | 0.52 | |
| Avail Cap(c_a), veh/h | 477 | 510 | | 534 | 510 | 432 | 658 | 1651 | 820 | 311 | 1728 | |
| HCM Platoon Ratio | 1.00 | 1.00 | 1.00 | 1.00 | 1.00 | 1.00 | 1.00 | 1.00 | 1.00 | 2.00 | 2.00 | 2.00 |
| Upstream Filter(I) | 1.00 | 1.00 | 0.00 | 1.00 | 1.00 | 1.00 | 1.00 | 1.00 | 1.00 | 0.82 | 0.82 | 0.00 |
| Uniform Delay (d), s/veh | 52.2 | 63.5 | 0.0 | 56.1 | 71.5 | 73.6 | 15.7 | 33.9 | 34.0 | 25.2 | 1.2 | 0.0 |
| Incr Delay (d2), s/veh | 22.4 | 1.2 | 0.0 | 1.6 | 2.3 | 10.4 | 0.2 | 2.9 | 5.9 | 1.2 | 0.9 | 0.0 |
| Initial Q Delay(d3),s/veh | 0.0 | 0.0 | 0.0 | 0.0 | 0.0 | 0.0 | 0.0 | 0.0 | 0.0 | 0.0 | 0.0 | 0.0 |
| %ile BackOfQ(95%),veh/ln | 26.2 | 9.0 | 0.0 | 15.0 | 6.4 | 9.0 | 2.8 | 26.7 | 27.5 | 3.6 | 1.3 | 0.0 |
| Unsig. Movement Delay, s/veh | | | | | | | | | | | | |
| LnGrp Delay(d),s/veh | 74.6 | 64.6 | 0.0 | 57.7 | 73.8 | 84.0 | 15.9 | 36.9 | 39.9 | 26.4 | 2.1 | 0.0 |
| LnGrp LOS | E | E | | E | E | F | B | D | D | C | A | |
| Approach Vol, veh/h | | 572 | | | 467 | | | 1905 | | | 1031 | |
| Approach Delay, s/veh | | 72.3 | | | 67.2 | | | 36.8 | | | 5.1 | |
| Approach LOS | | E | | | E | | | D | | | A | |

| Timer - Assigned Phs | 1 | 2 | 3 | 4 | 5 | 6 | 7 | 8 |
|---|---|---|---|---|---|---|---|---|
| Phs Duration (G+Y+Rc), s | 20.0 | 85.0 | 29.4 | 30.6 | 19.8 | 85.2 | 40.0 | 20.0 |
| Change Period (Y+Rc), s | 5.0 | 5.0 | 5.0 | 5.0 | 5.0 | 5.0 | 5.0 | 5.0 |
| Max Green Setting (Gmax), s | 20.0 | 45.0 | 35.0 | 45.0 | 30.0 | 35.0 | 35.0 | 45.0 |
| Max Q Clear Time (g_c+I1), s | 7.2 | 49.3 | 23.9 | 12.8 | 5.7 | 4.3 | 37.0 | 14.0 |
| Green Ext Time (p_c), s | 0.2 | 0.0 | 0.5 | 0.6 | 0.2 | 6.6 | 0.0 | 0.8 |

**Intersection Summary**

| | |
|---|---|
| HCM 6th Ctrl Delay | 37.3 |
| HCM 6th LOS | D |

**Notes**

Unsignalized Delay for [EBR, SBR] is excluded from calculations of the approach delay and intersection delay.

| Lane Group | EBL | EBT | EBR | WBL | WBT | WBR | NBL | NBT | SBL | SBT | SBR |
|---|---|---|---|---|---|---|---|---|---|---|---|
| Lane Configurations | | | | | | | | | | | |
| Traffic Volume (vph) | 376 | 116 | 78 | 227 | 74 | 101 | 77 | 1254 | 108 | 778 | 159 |
| Future Volume (vph) | 376 | 116 | 78 | 227 | 74 | 101 | 77 | 1254 | 108 | 778 | 159 |
| Turn Type | Prot | NA | Free | Prot | NA | pm+ov | pm+pt | NA | pm+pt | NA | Free |
| Protected Phases | 7 | 4 | | 3 | 8 | 1 | 5 | 2 | 1 | 6 | |
| Permitted Phases | | | Free | | | 8 | 2 | | 6 | | Free |
| Detector Phase | 7 | 4 | | 3 | 8 | 1 | 5 | 2 | 1 | 6 | |
| Switch Phase | | | | | | | | | | | |
| Minimum Initial (s) | 30.0 | 25.0 | | 20.0 | 15.0 | 15.0 | 15.0 | 30.0 | 15.0 | 30.0 | |
| Minimum Split (s) | 35.0 | 45.0 | | 35.0 | 30.0 | 20.0 | 30.0 | 35.0 | 20.0 | 35.0 | |
| Total Split (s) | 35.0 | 45.0 | | 35.0 | 45.0 | 20.0 | 30.0 | 65.0 | 20.0 | 55.0 | |
| Total Split (%) | 21.2% | 27.3% | | 21.2% | 27.3% | 12.1% | 18.2% | 39.4% | 12.1% | 33.3% | |
| Yellow Time (s) | 4.0 | 4.0 | | 4.0 | 4.0 | 4.0 | 4.0 | 4.0 | 4.0 | 4.0 | |
| All-Red Time (s) | 1.0 | 1.0 | | 1.0 | 1.0 | 1.0 | 1.0 | 1.0 | 1.0 | 1.0 | |
| Lost Time Adjust (s) | 0.0 | 0.0 | | 0.0 | 0.0 | 0.0 | 0.0 | 0.0 | 0.0 | 0.0 | |
| Total Lost Time (s) | 5.0 | 5.0 | | 5.0 | 5.0 | 5.0 | 5.0 | 5.0 | 5.0 | 5.0 | |
| Lead/Lag | Lead | Lag | | Lead | Lag | Lead | Lead | Lag | Lead | Lag | |
| Lead-Lag Optimize? | | | | | | | | | | | |
| Recall Mode | None | None | | None | None | None | None | C-Max | None | C-Max | |

**Intersection Summary**

Cycle Length: 165
Actuated Cycle Length: 165
Offset: 0 (0%), Referenced to phase 2:NBTL and 6:SBTL, Start of Green
Natural Cycle: 145
Control Type: Actuated-Coordinated

Splits and Phases: 1: Cerrillos Rd. & Beckner Rd.

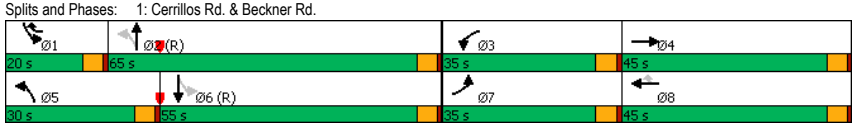






| Movement | EBL | EBT | EBR | WBL | WBT | WBR | NBL | NBT | NBR | SBL | SBT | SBR |
|---|---|---|---|---|---|---|---|---|---|---|---|---|
| Lane Configurations | | | | | | | | | | | | |
| Traffic Volume (veh/h) | 376 | 116 | 78 | 227 | 74 | 101 | 77 | 1254 | 307 | 108 | 778 | 159 |
| Future Volume (veh/h) | 376 | 116 | 78 | 227 | 74 | 101 | 77 | 1254 | 307 | 108 | 778 | 159 |
| Initial Q (Qb), veh | 0 | 0 | 0 | 0 | 0 | 0 | 0 | 0 | 0 | 0 | 0 | 0 |
| Ped-Bike Adj(A_pbT) | 1.00 | | 1.00 | 1.00 | | 1.00 | 1.00 | | 1.00 | 1.00 | | 1.00 |
| Parking Bus, Adj | 1.00 | 1.00 | 1.00 | 1.00 | 1.00 | 1.00 | 1.00 | 1.00 | 1.00 | 1.00 | 1.00 | 1.00 |
| Work Zone On Approach | | No | | | No | | | No | | | No | |
| Adj Sat Flow, veh/h/ln | 1870 | 1870 | 1870 | 1870 | 1870 | 1870 | 1870 | 1870 | 1870 | 1870 | 1870 | 1870 |
| Adj Flow Rate, veh/h | 437 | 135 | 0 | 264 | 86 | 117 | 90 | 1458 | 357 | 126 | 905 | 0 |
| Peak Hour Factor | 0.86 | 0.86 | 0.86 | 0.86 | 0.86 | 0.86 | 0.86 | 0.86 | 0.86 | 0.86 | 0.86 | 0.86 |
| Percent Heavy Veh, % | 2 | 2 | 2 | 2 | 2 | 2 | 2 | 2 | 2 | 2 | 2 | 2 |
| Cap, veh/h | 628 | 283 | | 419 | 170 | 288 | 520 | 2111 | 515 | 268 | 1836 | |
| Arrive On Green | 0.18 | 0.15 | 0.00 | 0.12 | 0.09 | 0.09 | 0.09 | 0.52 | 0.52 | 0.18 | 1.00 | 0.00 |
| Sat Flow, veh/h | 3456 | 1870 | 1585 | 3456 | 1870 | 1585 | 1781 | 4096 | 998 | 1781 | 3554 | 1585 |
| Grp Volume(v), veh/h | 437 | 135 | 0 | 264 | 86 | 117 | 90 | 1210 | 605 | 126 | 905 | 0 |
| Grp Sat Flow(s),veh/h/ln | 1728 | 1870 | 1585 | 1728 | 1870 | 1585 | 1781 | 1702 | 1691 | 1781 | 1777 | 1585 |
| Q Serve(g_s), s | 19.5 | 10.9 | 0.0 | 12.0 | 7.2 | 10.8 | 3.5 | 44.1 | 44.5 | 4.8 | 0.0 | 0.0 |
| Cycle Q Clear(g_c), s | 19.5 | 10.9 | 0.0 | 12.0 | 7.2 | 10.8 | 3.5 | 44.1 | 44.5 | 4.8 | 0.0 | 0.0 |
| Prop In Lane | 1.00 | | 1.00 | 1.00 | | 1.00 | 1.00 | | 0.59 | 1.00 | | 1.00 |
| Lane Grp Cap(c), veh/h | 628 | 283 | | 419 | 170 | 288 | 520 | 1755 | 871 | 268 | 1836 | |
| V/C Ratio(X) | 0.70 | 0.48 | | 0.63 | 0.51 | 0.41 | 0.17 | 0.69 | 0.69 | 0.47 | 0.49 | |
| Avail Cap(c_a), veh/h | 628 | 453 | | 628 | 453 | 528 | 631 | 1755 | 871 | 269 | 1836 | |
| HCM Platoon Ratio | 1.00 | 1.00 | 1.00 | 1.00 | 1.00 | 1.00 | 1.00 | 1.00 | 1.00 | 2.00 | 2.00 | 2.00 |
| Upstream Filter(I) | 1.00 | 1.00 | 0.00 | 1.00 | 1.00 | 1.00 | 1.00 | 1.00 | 1.00 | 0.86 | 0.86 | 0.00 |
| Uniform Delay (d), s/veh | 63.2 | 64.0 | 0.0 | 69.0 | 71.5 | 59.7 | 13.6 | 30.1 | 30.2 | 22.0 | 0.0 | 0.0 |
| Incr Delay (d2), s/veh | 3.3 | 1.2 | 0.0 | 1.6 | 2.3 | 0.9 | 0.2 | 2.2 | 4.5 | 1.1 | 0.8 | 0.0 |
| Initial Q Delay(d3),s/veh | 0.0 | 0.0 | 0.0 | 0.0 | 0.0 | 0.0 | 0.0 | 0.0 | 0.0 | 0.0 | 0.0 | 0.0 |
| %ile BackOfQ(95%),veh/ln | 13.6 | 9.0 | 0.0 | 9.1 | 6.4 | 7.8 | 2.5 | 25.0 | 25.7 | 3.4 | 0.4 | 0.0 |
| Unsig. Movement Delay, s/veh | | | | | | | | | | | | |
| LnGrp Delay(d),s/veh | 66.6 | 65.3 | 0.0 | 70.6 | 73.8 | 60.6 | 13.7 | 32.3 | 34.7 | 23.1 | 0.8 | 0.0 |
| LnGrp LOS | E | E | | E | E | E | B | C | C | C | A | |
| Approach Vol, veh/h | | 572 | | | 467 | | | 1905 | | | 1031 | |
| Approach Delay, s/veh | | 66.3 | | | 68.7 | | | 32.2 | | | 3.5 | |
| Approach LOS | | E | | | E | | | C | | | A | |

| Timer - Assigned Phs | 1 | 2 | 3 | 4 | 5 | 6 | 7 | 8 |
|---|---|---|---|---|---|---|---|---|
| Phs Duration (G+Y+Rc), s | 20.0 | 90.0 | 25.0 | 30.0 | 19.8 | 90.2 | 35.0 | 20.0 |
| Change Period (Y+Rc), s | 5.0 | 5.0 | 5.0 | 5.0 | 5.0 | 5.0 | 5.0 | 5.0 |
| Max Green Setting (Gmax), s | 15.0 | 60.0 | 30.0 | 40.0 | 25.0 | 50.0 | 30.0 | 40.0 |
| Max Q Clear Time (g_c+I1), s | 6.8 | 46.5 | 14.0 | 12.9 | 5.5 | 2.0 | 21.5 | 12.8 |
| Green Ext Time (p_c), s | 0.2 | 9.2 | 0.8 | 0.6 | 0.2 | 7.0 | 1.0 | 0.8 |

**Intersection Summary**

| | |
|---|---|
| HCM 6th Ctrl Delay | 33.9 |
| HCM 6th LOS | C |

**Notes**

Unsignalized Delay for [EBR, SBR] is excluded from calculations of the approach delay and intersection delay.

| Lane Group | EBL | EBT | EBR | WBL | WBT | WBR | NBL | NBT | SBL | SBT | SBR |
|---|---|---|---|---|---|---|---|---|---|---|---|
| Lane Configurations | | | | | | | | | | | |
| Traffic Volume (vph) | 221 | 17 | 47 | 133 | 27 | 55 | 68 | 958 | 30 | 1218 | 270 |
| Future Volume (vph) | 221 | 17 | 47 | 133 | 27 | 55 | 68 | 958 | 30 | 1218 | 270 |
| Turn Type | pm+pt | NA | Free | pm+pt | NA | Perm | pm+pt | NA | pm+pt | NA | Free |
| Protected Phases | 7 | 4 | | 3 | 8 | | 5 | 2 | 1 | 6 | |
| Permitted Phases | 4 | | Free | 8 | | 8 | 2 | | 6 | | Free |
| Detector Phase | 7 | 4 | | 3 | 8 | 8 | 5 | 2 | 1 | 6 | |
| Switch Phase | | | | | | | | | | | |
| Minimum Initial (s) | 30.0 | 25.0 | | 20.0 | 15.0 | 15.0 | 15.0 | 30.0 | 15.0 | 30.0 | |
| Minimum Split (s) | 35.0 | 45.0 | | 35.0 | 30.0 | 30.0 | 30.0 | 35.0 | 20.0 | 35.0 | |
| Total Split (s) | 40.0 | 35.0 | | 30.0 | 25.0 | 25.0 | 25.0 | 95.0 | 25.0 | 95.0 | |
| Total Split (%) | 21.6% | 18.9% | | 16.2% | 13.5% | 13.5% | 13.5% | 51.4% | 13.5% | 51.4% | |
| Yellow Time (s) | 4.0 | 4.0 | | 4.0 | 4.0 | 4.0 | 4.0 | 4.0 | 4.0 | 4.0 | |
| All-Red Time (s) | 1.0 | 1.0 | | 1.0 | 1.0 | 1.0 | 1.0 | 1.0 | 1.0 | 1.0 | |
| Lost Time Adjust (s) | 0.0 | 0.0 | | 0.0 | 0.0 | 0.0 | 0.0 | 0.0 | 0.0 | 0.0 | |
| Total Lost Time (s) | 5.0 | 5.0 | | 5.0 | 5.0 | 5.0 | 5.0 | 5.0 | 5.0 | 5.0 | |
| Lead/Lag | Lead | Lag | | Lead | Lag | Lag | Lead | Lag | Lead | Lag | |
| Lead-Lag Optimize? | | | | | | | | | | | |
| Recall Mode | None | None | | None | None | None | None | C-Max | None | C-Max | |

**Intersection Summary**

Cycle Length: 185
Actuated Cycle Length: 185
Offset: 75 (41%), Referenced to phase 2:NBTL and 6:SBTL, Start of Green
Natural Cycle: 145
Control Type: Actuated-Coordinated

Splits and Phases: 1: Cerrillos Rd. & Beckner Rd.








| Movement | EBL | EBT | EBR | WBL | WBT | WBR | NBL | NBT | NBR | SBL | SBT | SBR |
|---|---|---|---|---|---|---|---|---|---|---|---|---|
| Lane Configurations | | | | | | | | | | | | |
| Traffic Volume (veh/h) | 221 | 17 | 47 | 133 | 27 | 55 | 68 | 958 | 72 | 30 | 1218 | 270 |
| Future Volume (veh/h) | 221 | 17 | 47 | 133 | 27 | 55 | 68 | 958 | 72 | 30 | 1218 | 270 |
| Initial Q (Qb), veh | 0 | 0 | 0 | 0 | 0 | 0 | 0 | 0 | 0 | 0 | 0 | 0 |
| Ped-Bike Adj(A_pbT) | 1.00 | | 1.00 | 1.00 | | 1.00 | 1.00 | | 1.00 | 1.00 | | 1.00 |
| Parking Bus, Adj | 1.00 | 1.00 | 1.00 | 1.00 | 1.00 | 1.00 | 1.00 | 1.00 | 1.00 | 1.00 | 1.00 | 1.00 |
| Work Zone On Approach | | No | | | No | | | No | | | No | |
| Adj Sat Flow, veh/h/ln | 1870 | 1870 | 1870 | 1870 | 1870 | 1870 | 1870 | 1870 | 1870 | 1870 | 1870 | 1870 |
| Adj Flow Rate, veh/h | 230 | 18 | 0 | 139 | 28 | 57 | 71 | 998 | 75 | 31 | 1269 | 0 |
| Peak Hour Factor | 0.96 | 0.96 | 0.96 | 0.96 | 0.96 | 0.96 | 0.96 | 0.96 | 0.96 | 0.96 | 0.96 | 0.96 |
| Percent Heavy Veh, % | 2 | 2 | 2 | 2 | 2 | 2 | 2 | 2 | 2 | 2 | 2 | 2 |
| Cap, veh/h | 416 | 253 | | 344 | 152 | 129 | 428 | 2830 | 212 | 404 | 2024 | |
| Arrive On Green | 0.16 | 0.14 | 0.00 | 0.11 | 0.08 | 0.08 | 0.08 | 0.58 | 0.58 | 0.13 | 1.00 | 0.00 |
| Sat Flow, veh/h | 1781 | 1870 | 1585 | 1781 | 1870 | 1585 | 1781 | 4845 | 364 | 1781 | 3554 | 1585 |
| Grp Volume(v), veh/h | 230 | 18 | 0 | 139 | 28 | 57 | 71 | 701 | 372 | 31 | 1269 | 0 |
| Grp Sat Flow(s),veh/h/ln | 1781 | 1870 | 1585 | 1781 | 1870 | 1585 | 1781 | 1702 | 1805 | 1781 | 1777 | 1585 |
| Q Serve(g_s), s | 20.5 | 1.6 | 0.0 | 12.7 | 2.6 | 6.3 | 2.7 | 19.9 | 20.0 | 1.1 | 0.0 | 0.0 |
| Cycle Q Clear(g_c), s | 20.5 | 1.6 | 0.0 | 12.7 | 2.6 | 6.3 | 2.7 | 19.9 | 20.0 | 1.1 | 0.0 | 0.0 |
| Prop In Lane | 1.00 | | 1.00 | 1.00 | | 1.00 | 1.00 | | 0.20 | 1.00 | | 1.00 |
| Lane Grp Cap(c), veh/h | 416 | 253 | | 344 | 152 | 129 | 428 | 1988 | 1054 | 404 | 2024 | |
| V/C Ratio(X) | 0.55 | 0.07 | | 0.40 | 0.18 | 0.44 | 0.17 | 0.35 | 0.35 | 0.08 | 0.63 | |
| Avail Cap(c_a), veh/h | 464 | 303 | | 393 | 202 | 171 | 480 | 1988 | 1054 | 482 | 2024 | |
| HCM Platoon Ratio | 1.00 | 1.00 | 1.00 | 1.00 | 1.00 | 1.00 | 1.00 | 1.00 | 1.00 | 2.00 | 2.00 | 2.00 |
| Upstream Filter(I) | 1.00 | 1.00 | 0.00 | 1.00 | 1.00 | 1.00 | 1.00 | 1.00 | 1.00 | 0.77 | 0.77 | 0.00 |
| Uniform Delay (d), s/veh | 59.2 | 69.8 | 0.0 | 66.0 | 79.3 | 81.0 | 11.9 | 20.2 | 20.2 | 12.5 | 0.0 | 0.0 |
| Incr Delay (d2), s/veh | 1.2 | 0.1 | 0.0 | 0.8 | 0.6 | 2.4 | 0.2 | 0.5 | 0.9 | 0.1 | 1.1 | 0.0 |
| Initial Q Delay(d3),s/veh | 0.0 | 0.0 | 0.0 | 0.0 | 0.0 | 0.0 | 0.0 | 0.0 | 0.0 | 0.0 | 0.0 | 0.0 |
| %ile BackOfQ(50%),veh/ln | 9.3 | 0.8 | 0.0 | 5.8 | 1.3 | 2.7 | 1.1 | 8.0 | 8.6 | 0.5 | 0.3 | 0.0 |
| Unsig. Movement Delay, s/veh | | | | | | | | | | | | |
| LnGrp Delay(d),s/veh | 60.3 | 70.0 | 0.0 | 66.7 | 79.9 | 83.4 | 12.1 | 20.6 | 21.1 | 12.6 | 1.1 | 0.0 |
| LnGrp LOS | E | E | | E | E | F | B | C | C | B | A | |
| Approach Vol, veh/h | | 248 | | | 224 | | | 1144 | | | 1300 | |
| Approach Delay, s/veh | | 61.0 | | | 72.6 | | | 20.3 | | | 1.4 | |
| Approach LOS | | E | | | E | | | C | | | A | |

| Timer - Assigned Phs | 1 | 2 | 3 | 4 | 5 | 6 | 7 | 8 |
|---|---|---|---|---|---|---|---|---|
| Phs Duration (G+Y+Rc), s | 17.0 | 113.0 | 25.0 | 30.0 | 19.6 | 110.4 | 35.0 | 20.0 |
| Change Period (Y+Rc), s | 5.0 | 5.0 | 5.0 | 5.0 | 5.0 | 5.0 | 5.0 | 5.0 |
| Max Green Setting (Gmax), s | 20.0 | 90.0 | 25.0 | 30.0 | 20.0 | 90.0 | 35.0 | 20.0 |
| Max Q Clear Time (g_c+I1), s | 3.1 | 22.0 | 14.7 | 3.6 | 4.7 | 2.0 | 22.5 | 8.3 |
| Green Ext Time (p_c), s | 0.0 | 8.1 | 0.2 | 0.0 | 0.1 | 12.1 | 0.5 | 0.2 |

**Intersection Summary**

| | |
|---|---|
| HCM 6th Ctrl Delay | 19.3 |
| HCM 6th LOS | B |

**Notes**

Unsignalized Delay for [EBR, SBR] is excluded from calculations of the approach delay and intersection delay.

| Lane Group | EBL | EBT | EBR | WBL | WBT | WBR | NBL | NBT | SBL | SBT | SBR |
|---|---|---|---|---|---|---|---|---|---|---|---|
| Lane Configurations | | | | | | | | | | | |
| Traffic Volume (vph) | 279 | 47 | 52 | 303 | 90 | 116 | 82 | 1085 | 60 | 1280 | 305 |
| Future Volume (vph) | 279 | 47 | 52 | 303 | 90 | 116 | 82 | 1085 | 60 | 1280 | 305 |
| Turn Type | pm+pt | NA | Free | pm+pt | NA | Perm | pm+pt | NA | pm+pt | NA | Free |
| Protected Phases | 7 | 4 | | 3 | 8 | | 5 | 2 | 1 | 6 | |
| Permitted Phases | 4 | | Free | 8 | | 8 | 2 | | 6 | | Free |
| Detector Phase | 7 | 4 | | 3 | 8 | 8 | 5 | 2 | 1 | 6 | |
| Switch Phase | | | | | | | | | | | |
| Minimum Initial (s) | 30.0 | 25.0 | | 20.0 | 15.0 | 15.0 | 15.0 | 30.0 | 15.0 | 30.0 | |
| Minimum Split (s) | 35.0 | 45.0 | | 35.0 | 30.0 | 30.0 | 30.0 | 35.0 | 20.0 | 35.0 | |
| Total Split (s) | 40.0 | 35.0 | | 30.0 | 25.0 | 25.0 | 25.0 | 95.0 | 25.0 | 95.0 | |
| Total Split (%) | 21.6% | 18.9% | | 16.2% | 13.5% | 13.5% | 13.5% | 51.4% | 13.5% | 51.4% | |
| Yellow Time (s) | 4.0 | 4.0 | | 4.0 | 4.0 | 4.0 | 4.0 | 4.0 | 4.0 | 4.0 | |
| All-Red Time (s) | 1.0 | 1.0 | | 1.0 | 1.0 | 1.0 | 1.0 | 1.0 | 1.0 | 1.0 | |
| Lost Time Adjust (s) | 0.0 | 0.0 | | 0.0 | 0.0 | 0.0 | 0.0 | 0.0 | 0.0 | 0.0 | |
| Total Lost Time (s) | 5.0 | 5.0 | | 5.0 | 5.0 | 5.0 | 5.0 | 5.0 | 5.0 | 5.0 | |
| Lead/Lag | Lead | Lag | | Lead | Lag | Lag | Lead | Lag | Lead | Lag | |
| Lead-Lag Optimize? | | | | | | | | | | | |
| Recall Mode | None | None | | None | None | None | None | C-Max | None | C-Max | |

**Intersection Summary**

Cycle Length: 185
Actuated Cycle Length: 185
Offset: 75 (41%), Referenced to phase 2:NBTL and 6:SBTL, Start of Green
Natural Cycle: 145
Control Type: Actuated-Coordinated

Splits and Phases: 1: Cerrillos Rd. & Beckner Rd.








| Movement | EBL | EBT | EBR | WBL | WBT | WBR | NBL | NBT | NBR | SBL | SBT | SBR |
|---|---|---|---|---|---|---|---|---|---|---|---|---|
| Lane Configurations | | | | | | | | | | | | |
| Traffic Volume (veh/h) | 279 | 47 | 52 | 303 | 90 | 116 | 82 | 1085 | 172 | 60 | 1280 | 305 |
| Future Volume (veh/h) | 279 | 47 | 52 | 303 | 90 | 116 | 82 | 1085 | 172 | 60 | 1280 | 305 |
| Initial Q (Qb), veh | 0 | 0 | 0 | 0 | 0 | 0 | 0 | 0 | 0 | 0 | 0 | 0 |
| Ped-Bike Adj(A_pbT) | 1.00 | | 1.00 | 1.00 | | 1.00 | 1.00 | | 1.00 | 1.00 | | 1.00 |
| Parking Bus, Adj | 1.00 | 1.00 | 1.00 | 1.00 | 1.00 | 1.00 | 1.00 | 1.00 | 1.00 | 1.00 | 1.00 | 1.00 |
| Work Zone On Approach | | No | | | No | | | No | | | No | |
| Adj Sat Flow, veh/h/ln | 1870 | 1870 | 1870 | 1870 | 1870 | 1870 | 1870 | 1870 | 1870 | 1870 | 1870 | 1870 |
| Adj Flow Rate, veh/h | 291 | 49 | 0 | 316 | 94 | 121 | 85 | 1130 | 179 | 62 | 1333 | 0 |
| Peak Hour Factor | 0.96 | 0.96 | 0.96 | 0.96 | 0.96 | 0.96 | 0.96 | 0.96 | 0.96 | 0.96 | 0.96 | 0.96 |
| Percent Heavy Veh, % | 2 | 2 | 2 | 2 | 2 | 2 | 2 | 2 | 2 | 2 | 2 | 2 |
| Cap, veh/h | 399 | 253 | | 426 | 202 | 171 | 404 | 2417 | 383 | 341 | 1925 | |
| Arrive On Green | 0.16 | 0.14 | 0.00 | 0.14 | 0.11 | 0.11 | 0.08 | 0.54 | 0.54 | 0.16 | 1.00 | 0.00 |
| Sat Flow, veh/h | 1781 | 1870 | 1585 | 1781 | 1870 | 1585 | 1781 | 4444 | 704 | 1781 | 3554 | 1585 |
| Grp Volume(v), veh/h | 291 | 49 | 0 | 316 | 94 | 121 | 85 | 865 | 444 | 62 | 1333 | 0 |
| Grp Sat Flow(s),veh/h/ln | 1781 | 1870 | 1585 | 1781 | 1870 | 1585 | 1781 | 1702 | 1744 | 1781 | 1777 | 1585 |
| Q Serve(g_s), s | 26.0 | 4.3 | 0.0 | 25.0 | 8.7 | 13.6 | 3.5 | 28.8 | 28.8 | 2.4 | 0.0 | 0.0 |
| Cycle Q Clear(g_c), s | 26.0 | 4.3 | 0.0 | 25.0 | 8.7 | 13.6 | 3.5 | 28.8 | 28.8 | 2.4 | 0.0 | 0.0 |
| Prop In Lane | 1.00 | | 1.00 | 1.00 | | 1.00 | 1.00 | | 0.40 | 1.00 | | 1.00 |
| Lane Grp Cap(c), veh/h | 399 | 253 | | 426 | 202 | 171 | 404 | 1851 | 948 | 341 | 1925 | |
| V/C Ratio(X) | 0.73 | 0.19 | | 0.74 | 0.46 | 0.71 | 0.21 | 0.47 | 0.47 | 0.18 | 0.69 | |
| Avail Cap(c_a), veh/h | 447 | 303 | | 426 | 202 | 171 | 454 | 1851 | 948 | 395 | 1925 | |
| HCM Platoon Ratio | 1.00 | 1.00 | 1.00 | 1.00 | 1.00 | 1.00 | 1.00 | 1.00 | 1.00 | 2.00 | 2.00 | 2.00 |
| Upstream Filter(I) | 1.00 | 1.00 | 0.00 | 1.00 | 1.00 | 1.00 | 1.00 | 1.00 | 1.00 | 0.72 | 0.72 | 0.00 |
| Uniform Delay (d), s/veh | 57.6 | 71.1 | 0.0 | 64.5 | 77.5 | 79.7 | 13.9 | 25.8 | 25.8 | 15.0 | 0.0 | 0.0 |
| Incr Delay (d2), s/veh | 5.3 | 0.4 | 0.0 | 6.8 | 1.7 | 12.4 | 0.3 | 0.9 | 1.7 | 0.2 | 1.5 | 0.0 |
| Initial Q Delay(d3),s/veh | 0.0 | 0.0 | 0.0 | 0.0 | 0.0 | 0.0 | 0.0 | 0.0 | 0.0 | 0.0 | 0.0 | 0.0 |
| %ile BackOfQ(95%),veh/ln | 17.9 | 3.7 | 0.0 | 20.7 | 7.7 | 10.2 | 2.6 | 17.4 | 18.0 | 1.7 | 0.7 | 0.0 |
| Unsig. Movement Delay, s/veh | | | | | | | | | | | | |
| LnGrp Delay(d),s/veh | 62.8 | 71.4 | 0.0 | 71.3 | 79.1 | 92.1 | 14.2 | 26.7 | 27.5 | 15.2 | 1.5 | 0.0 |
| LnGrp LOS | E | E | | E | E | F | B | C | C | B | A | |
| Approach Vol, veh/h | | 340 | | | 531 | | | 1394 | | | 1395 | |
| Approach Delay, s/veh | | 64.1 | | | 77.4 | | | 26.2 | | | 2.1 | |
| Approach LOS | | E | | | E | | | C | | | A | |

| Timer - Assigned Phs | 1 | 2 | 3 | 4 | 5 | 6 | 7 | 8 |
|---|---|---|---|---|---|---|---|---|
| Phs Duration (G+Y+Rc), s | 19.4 | 105.6 | 30.0 | 30.0 | 19.8 | 105.2 | 35.0 | 25.0 |
| Change Period (Y+Rc), s | 5.0 | 5.0 | 5.0 | 5.0 | 5.0 | 5.0 | 5.0 | 5.0 |
| Max Green Setting (Gmax), s | 20.0 | 90.0 | 25.0 | 30.0 | 20.0 | 90.0 | 35.0 | 20.0 |
| Max Q Clear Time (g_c+I1), s | 4.4 | 30.8 | 27.0 | 6.3 | 5.5 | 2.0 | 28.0 | 15.6 |
| Green Ext Time (p_c), s | 0.1 | 11.1 | 0.0 | 0.2 | 0.1 | 13.3 | 0.5 | 0.3 |

**Intersection Summary**

| | |
|---|---|
| HCM 6th Ctrl Delay | 28.0 |
| HCM 6th LOS | C |

**Notes**

Unsignalized Delay for [EBR, SBR] is excluded from calculations of the approach delay and intersection delay.

| Lane Group | EBL | EBT | EBR | WBL | WBT | WBR | NBL | NBT | SBL | SBT | SBR |
|---|---|---|---|---|---|---|---|---|---|---|---|
| Lane Configurations | | | | | | | | | | | |
| Traffic Volume (vph) | 279 | 47 | 52 | 303 | 90 | 116 | 82 | 1085 | 60 | 1280 | 305 |
| Future Volume (vph) | 279 | 47 | 52 | 303 | 90 | 116 | 82 | 1085 | 60 | 1280 | 305 |
| Turn Type | Prot | NA | Free | Prot | NA | pm+ov | pm+pt | NA | pm+pt | NA | Free |
| Protected Phases | 7 | 4 | | 3 | 8 | 1 | 5 | 2 | 1 | 6 | |
| Permitted Phases | | | Free | | | 8 | 2 | | 6 | | Free |
| Detector Phase | 7 | 4 | | 3 | 8 | 1 | 5 | 2 | 1 | 6 | |
| Switch Phase | | | | | | | | | | | |
| Minimum Initial (s) | 30.0 | 25.0 | | 20.0 | 15.0 | 15.0 | 15.0 | 30.0 | 15.0 | 30.0 | |
| Minimum Split (s) | 35.0 | 45.0 | | 35.0 | 30.0 | 20.0 | 30.0 | 35.0 | 20.0 | 35.0 | |
| Total Split (s) | 35.0 | 45.0 | | 35.0 | 45.0 | 20.0 | 30.0 | 85.0 | 20.0 | 75.0 | |
| Total Split (%) | 18.9% | 24.3% | | 18.9% | 24.3% | 10.8% | 16.2% | 45.9% | 10.8% | 40.5% | |
| Yellow Time (s) | 4.0 | 4.0 | | 4.0 | 4.0 | 4.0 | 4.0 | 4.0 | 4.0 | 4.0 | |
| All-Red Time (s) | 1.0 | 1.0 | | 1.0 | 1.0 | 1.0 | 1.0 | 1.0 | 1.0 | 1.0 | |
| Lost Time Adjust (s) | 0.0 | 0.0 | | 0.0 | 0.0 | 0.0 | 0.0 | 0.0 | 0.0 | 0.0 | |
| Total Lost Time (s) | 5.0 | 5.0 | | 5.0 | 5.0 | 5.0 | 5.0 | 5.0 | 5.0 | 5.0 | |
| Lead/Lag | Lead | Lag | | Lead | Lag | Lead | Lead | Lag | Lead | Lag | |
| Lead-Lag Optimize? | | | | | | | | | | | |
| Recall Mode | None | None | | None | None | None | None | C-Max | None | C-Max | |

**Intersection Summary**

Cycle Length: 185
Actuated Cycle Length: 185
Offset: 75 (41%), Referenced to phase 2:NBTL and 6:SBTL, Start of Green
Natural Cycle: 145
Control Type: Actuated-Coordinated

Splits and Phases: 1: Cerrillos Rd. & Beckner Rd.

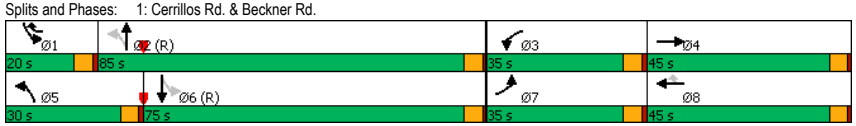






| Movement | EBL | EBT | EBR | WBL | WBT | WBR | NBL | NBT | NBR | SBL | SBT | SBR |
|---|---|---|---|---|---|---|---|---|---|---|---|---|
| Lane Configurations | | | | | | | | | | | | |
| Traffic Volume (veh/h) | 279 | 47 | 52 | 303 | 90 | 116 | 82 | 1085 | 172 | 60 | 1280 | 305 |
| Future Volume (veh/h) | 279 | 47 | 52 | 303 | 90 | 116 | 82 | 1085 | 172 | 60 | 1280 | 305 |
| Initial Q (Qb), veh | 0 | 0 | 0 | 0 | 0 | 0 | 0 | 0 | 0 | 0 | 0 | 0 |
| Ped-Bike Adj(A_pbT) | 1.00 | | 1.00 | 1.00 | | 1.00 | 1.00 | | 1.00 | 1.00 | | 1.00 |
| Parking Bus, Adj | 1.00 | 1.00 | 1.00 | 1.00 | 1.00 | 1.00 | 1.00 | 1.00 | 1.00 | 1.00 | 1.00 | 1.00 |
| Work Zone On Approach | | No | | | No | | | No | | | No | |
| Adj Sat Flow, veh/h/ln | 1870 | 1870 | 1870 | 1870 | 1870 | 1870 | 1870 | 1870 | 1870 | 1870 | 1870 | 1870 |
| Adj Flow Rate, veh/h | 291 | 49 | 0 | 316 | 94 | 121 | 85 | 1130 | 179 | 62 | 1333 | 0 |
| Peak Hour Factor | 0.96 | 0.96 | 0.96 | 0.96 | 0.96 | 0.96 | 0.96 | 0.96 | 0.96 | 0.96 | 0.96 | 0.96 |
| Percent Heavy Veh, % | 2 | 2 | 2 | 2 | 2 | 2 | 2 | 2 | 2 | 2 | 2 | 2 |
| Cap, veh/h | 560 | 259 | | 374 | 158 | 257 | 414 | 2523 | 399 | 354 | 2009 | |
| Arrive On Green | 0.16 | 0.14 | 0.00 | 0.11 | 0.08 | 0.08 | 0.08 | 0.57 | 0.57 | 0.16 | 1.00 | 0.00 |
| Sat Flow, veh/h | 3456 | 1870 | 1585 | 3456 | 1870 | 1585 | 1781 | 4444 | 704 | 1781 | 3554 | 1585 |
| Grp Volume(v), veh/h | 291 | 49 | 0 | 316 | 94 | 121 | 85 | 865 | 444 | 62 | 1333 | 0 |
| Grp Sat Flow(s),veh/h/ln | 1728 | 1870 | 1585 | 1728 | 1870 | 1585 | 1781 | 1702 | 1744 | 1781 | 1777 | 1585 |
| Q Serve(g_s), s | 14.3 | 4.3 | 0.0 | 16.6 | 9.0 | 12.8 | 3.3 | 27.3 | 27.3 | 2.3 | 0.0 | 0.0 |
| Cycle Q Clear(g_c), s | 14.3 | 4.3 | 0.0 | 16.6 | 9.0 | 12.8 | 3.3 | 27.3 | 27.3 | 2.3 | 0.0 | 0.0 |
| Prop In Lane | 1.00 | | 1.00 | 1.00 | | 1.00 | 1.00 | | 0.40 | 1.00 | | 1.00 |
| Lane Grp Cap(c), veh/h | 560 | 259 | | 374 | 158 | 257 | 414 | 1932 | 990 | 354 | 2009 | |
| V/C Ratio(X) | 0.52 | 0.19 | | 0.85 | 0.60 | 0.47 | 0.21 | 0.45 | 0.45 | 0.18 | 0.66 | |
| Avail Cap(c_a), veh/h | 560 | 404 | | 560 | 404 | 466 | 512 | 1932 | 990 | 360 | 2009 | |
| HCM Platoon Ratio | 1.00 | 1.00 | 1.00 | 1.00 | 1.00 | 1.00 | 1.00 | 1.00 | 1.00 | 2.00 | 2.00 | 2.00 |
| Upstream Filter(I) | 1.00 | 1.00 | 0.00 | 1.00 | 1.00 | 1.00 | 1.00 | 1.00 | 1.00 | 0.74 | 0.74 | 0.00 |
| Uniform Delay (d), s/veh | 70.9 | 70.5 | 0.0 | 81.0 | 81.7 | 70.3 | 12.2 | 23.2 | 23.2 | 13.2 | 0.0 | 0.0 |
| Incr Delay (d2), s/veh | 0.9 | 0.4 | 0.0 | 7.5 | 3.6 | 1.3 | 0.2 | 0.8 | 1.5 | 0.2 | 1.3 | 0.0 |
| Initial Q Delay(d3),s/veh | 0.0 | 0.0 | 0.0 | 0.0 | 0.0 | 0.0 | 0.0 | 0.0 | 0.0 | 0.0 | 0.0 | 0.0 |
| %ile BackOfQ(95%),veh/ln | 10.5 | 3.7 | 0.0 | 12.3 | 7.9 | 9.0 | 2.4 | 16.5 | 17.1 | 1.6 | 0.7 | 0.0 |
| Unsig. Movement Delay, s/veh | | | | | | | | | | | | |
| LnGrp Delay(d),s/veh | 71.8 | 70.9 | 0.0 | 88.5 | 85.2 | 71.7 | 12.5 | 23.9 | 24.7 | 13.4 | 1.3 | 0.0 |
| LnGrp LOS | E | E | | F | F | E | B | C | C | B | A | |
| Approach Vol, veh/h | | 340 | | | 531 | | | 1394 | | | 1395 | |
| Approach Delay, s/veh | | 71.6 | | | 84.1 | | | 23.5 | | | 1.8 | |
| Approach LOS | | E | | | F | | | C | | | A | |

| Timer - Assigned Phs | 1 | 2 | 3 | 4 | 5 | 6 | 7 | 8 |
|---|---|---|---|---|---|---|---|---|
| Phs Duration (G+Y+Rc), s | 19.4 | 110.0 | 25.0 | 30.6 | 19.8 | 109.6 | 35.0 | 20.6 |
| Change Period (Y+Rc), s | 5.0 | 5.0 | 5.0 | 5.0 | 5.0 | 5.0 | 5.0 | 5.0 |
| Max Green Setting (Gmax), s | 15.0 | 80.0 | 30.0 | 40.0 | 25.0 | 70.0 | 30.0 | 40.0 |
| Max Q Clear Time (g_c+I1), s | 4.3 | 29.3 | 18.6 | 6.3 | 5.3 | 2.0 | 16.3 | 14.8 |
| Green Ext Time (p_c), s | 0.1 | 10.9 | 0.8 | 0.2 | 0.2 | 13.1 | 0.8 | 0.8 |

**Intersection Summary**

| | |
|---|---|
| HCM 6th Ctrl Delay | 28.5 |
| HCM 6th LOS | C |

**Notes**

Unsignalized Delay for [EBR, SBR] is excluded from calculations of the approach delay and intersection delay.

| Lane Group | EBL | EBT | EBR | WBL | WBT | WBR | NBL | NBT | SBL | SBT | SBR |
|---|---|---|---|---|---|---|---|---|---|---|---|
| Lane Configurations | | | | | | | | | | | |
| Traffic Volume (vph) | 322 | 53 | 61 | 380 | 98 | 204 | 95 | 1273 | 131 | 1518 | 358 |
| Future Volume (vph) | 322 | 53 | 61 | 380 | 98 | 204 | 95 | 1273 | 131 | 1518 | 358 |
| Turn Type | pm+pt | NA | Free | pm+pt | NA | Perm | pm+pt | NA | pm+pt | NA | Free |
| Protected Phases | 7 | 4 | | 3 | 8 | | 5 | 2 | 1 | 6 | |
| Permitted Phases | 4 | | Free | 8 | | 8 | 2 | | 6 | | Free |
| Detector Phase | 7 | 4 | | 3 | 8 | 8 | 5 | 2 | 1 | 6 | |
| Switch Phase | | | | | | | | | | | |
| Minimum Initial (s) | 30.0 | 25.0 | | 20.0 | 15.0 | 15.0 | 15.0 | 30.0 | 15.0 | 30.0 | |
| Minimum Split (s) | 35.0 | 45.0 | | 35.0 | 30.0 | 30.0 | 30.0 | 35.0 | 20.0 | 35.0 | |
| Total Split (s) | 40.0 | 35.0 | | 30.0 | 25.0 | 25.0 | 25.0 | 95.0 | 25.0 | 95.0 | |
| Total Split (%) | 21.6% | 18.9% | | 16.2% | 13.5% | 13.5% | 13.5% | 51.4% | 13.5% | 51.4% | |
| Yellow Time (s) | 4.0 | 4.0 | | 4.0 | 4.0 | 4.0 | 4.0 | 4.0 | 4.0 | 4.0 | |
| All-Red Time (s) | 1.0 | 1.0 | | 1.0 | 1.0 | 1.0 | 1.0 | 1.0 | 1.0 | 1.0 | |
| Lost Time Adjust (s) | 0.0 | 0.0 | | 0.0 | 0.0 | 0.0 | 0.0 | 0.0 | 0.0 | 0.0 | |
| Total Lost Time (s) | 5.0 | 5.0 | | 5.0 | 5.0 | 5.0 | 5.0 | 5.0 | 5.0 | 5.0 | |
| Lead/Lag | Lead | Lag | | Lead | Lag | Lag | Lead | Lag | Lead | Lag | |
| Lead-Lag Optimize? | | | | | | | | | | | |
| Recall Mode | None | None | | None | None | None | None | C-Max | None | C-Max | |

**Intersection Summary**

Cycle Length: 185
Actuated Cycle Length: 185
Offset: 75 (41%), Referenced to phase 2:NBTL and 6:SBTL, Start of Green
Natural Cycle: 145
Control Type: Actuated-Coordinated

Splits and Phases: 1: Cerrillos Rd. & Beckner Rd.








| Movement | EBL | EBT | EBR | WBL | WBT | WBR | NBL | NBT | NBR | SBL | SBT | SBR |
|---|---|---|---|---|---|---|---|---|---|---|---|---|
| Lane Configurations | | | | | | | | | | | | |
| Traffic Volume (veh/h) | 322 | 53 | 61 | 380 | 98 | 204 | 95 | 1273 | 224 | 131 | 1518 | 358 |
| Future Volume (veh/h) | 322 | 53 | 61 | 380 | 98 | 204 | 95 | 1273 | 224 | 131 | 1518 | 358 |
| Initial Q (Qb), veh | 0 | 0 | 0 | 0 | 0 | 0 | 0 | 0 | 0 | 0 | 0 | 0 |
| Ped-Bike Adj(A_pbT) | 1.00 | | 1.00 | 1.00 | | 1.00 | 1.00 | | 1.00 | 1.00 | | 1.00 |
| Parking Bus, Adj | 1.00 | 1.00 | 1.00 | 1.00 | 1.00 | 1.00 | 1.00 | 1.00 | 1.00 | 1.00 | 1.00 | 1.00 |
| Work Zone On Approach | | No | | | No | | | No | | | No | |
| Adj Sat Flow, veh/h/ln | 1870 | 1870 | 1870 | 1870 | 1870 | 1870 | 1870 | 1870 | 1870 | 1870 | 1870 | 1870 |
| Adj Flow Rate, veh/h | 335 | 55 | 0 | 396 | 102 | 212 | 99 | 1326 | 233 | 136 | 1581 | 0 |
| Peak Hour Factor | 0.96 | 0.96 | 0.96 | 0.96 | 0.96 | 0.96 | 0.96 | 0.96 | 0.96 | 0.96 | 0.96 | 0.96 |
| Percent Heavy Veh, % | 2 | 2 | 2 | 2 | 2 | 2 | 2 | 2 | 2 | 2 | 2 | 2 |
| Cap, veh/h | 412 | 278 | | 425 | 202 | 171 | 353 | 2302 | 404 | 289 | 1874 | |
| Arrive On Green | 0.18 | 0.15 | 0.00 | 0.14 | 0.11 | 0.11 | 0.08 | 0.53 | 0.53 | 0.16 | 1.00 | 0.00 |
| Sat Flow, veh/h | 1781 | 1870 | 1585 | 1781 | 1870 | 1585 | 1781 | 4369 | 767 | 1781 | 3554 | 1585 |
| Grp Volume(v), veh/h | 335 | 55 | 0 | 396 | 102 | 212 | 99 | 1033 | 526 | 136 | 1581 | 0 |
| Grp Sat Flow(s),veh/h/ln | 1781 | 1870 | 1585 | 1781 | 1870 | 1585 | 1781 | 1702 | 1732 | 1781 | 1777 | 1585 |
| Q Serve(g_s), s | 30.2 | 4.8 | 0.0 | 25.0 | 9.5 | 20.0 | 4.3 | 38.1 | 38.1 | 6.0 | 0.0 | 0.0 |
| Cycle Q Clear(g_c), s | 30.2 | 4.8 | 0.0 | 25.0 | 9.5 | 20.0 | 4.3 | 38.1 | 38.1 | 6.0 | 0.0 | 0.0 |
| Prop In Lane | 1.00 | | 1.00 | 1.00 | | 1.00 | 1.00 | | 0.44 | 1.00 | | 1.00 |
| Lane Grp Cap(c), veh/h | 412 | 278 | | 425 | 202 | 171 | 353 | 1794 | 913 | 289 | 1874 | |
| V/C Ratio(X) | 0.81 | 0.20 | | 0.93 | 0.50 | 1.24 | 0.28 | 0.58 | 0.58 | 0.47 | 0.84 | |
| Avail Cap(c_a), veh/h | 436 | 303 | | 425 | 202 | 171 | 402 | 1794 | 913 | 338 | 1874 | |
| HCM Platoon Ratio | 1.00 | 1.00 | 1.00 | 1.00 | 1.00 | 1.00 | 1.00 | 1.00 | 1.00 | 2.00 | 2.00 | 2.00 |
| Upstream Filter(I) | 1.00 | 1.00 | 0.00 | 1.00 | 1.00 | 1.00 | 1.00 | 1.00 | 1.00 | 0.38 | 0.38 | 0.00 |
| Uniform Delay (d), s/veh | 57.2 | 69.1 | 0.0 | 69.1 | 77.8 | 82.5 | 15.1 | 29.7 | 29.7 | 19.8 | 0.0 | 0.0 |
| Incr Delay (d2), s/veh | 10.7 | 0.3 | 0.0 | 27.1 | 2.0 | 146.6 | 0.4 | 1.4 | 2.6 | 0.5 | 1.9 | 0.0 |
| Initial Q Delay(d3),s/veh | 0.0 | 0.0 | 0.0 | 0.0 | 0.0 | 0.0 | 0.0 | 0.0 | 0.0 | 0.0 | 0.0 | 0.0 |
| %ile BackOfQ(95%),veh/ln | 21.0 | 4.1 | 0.0 | 14.4 | 8.2 | 23.3 | 3.2 | 22.2 | 23.0 | 3.8 | 0.9 | 0.0 |
| Unsig. Movement Delay, s/veh | | | | | | | | | | | | |
| LnGrp Delay(d),s/veh | 67.9 | 69.4 | 0.0 | 96.2 | 79.8 | 229.1 | 15.5 | 31.1 | 32.4 | 20.2 | 1.9 | 0.0 |
| LnGrp LOS | E | E | | F | E | F | B | C | C | C | A | |
| Approach Vol, veh/h | | 390 | | | 710 | | | 1658 | | | 1717 | |
| Approach Delay, s/veh | | 68.1 | | | 133.5 | | | 30.5 | | | 3.4 | |
| Approach LOS | | E | | | F | | | C | | | A | |

| Timer - Assigned Phs | 1 | 2 | 3 | 4 | 5 | 6 | 7 | 8 |
|---|---|---|---|---|---|---|---|---|
| Phs Duration (G+Y+Rc), s | 20.0 | 102.5 | 30.0 | 32.5 | 19.9 | 102.6 | 37.5 | 25.0 |
| Change Period (Y+Rc), s | 5.0 | 5.0 | 5.0 | 5.0 | 5.0 | 5.0 | 5.0 | 5.0 |
| Max Green Setting (Gmax), s | 20.0 | 90.0 | 25.0 | 30.0 | 20.0 | 90.0 | 35.0 | 20.0 |
| Max Q Clear Time (g_c+I1), s | 8.0 | 40.1 | 27.0 | 6.8 | 6.3 | 2.0 | 32.2 | 22.0 |
| Green Ext Time (p_c), s | 0.2 | 14.5 | 0.0 | 0.2 | 0.2 | 18.7 | 0.3 | 0.0 |

| Intersection Summary | |
|---|---|
| HCM 6th Ctrl Delay | 39.7 |
| HCM 6th LOS | D |

**Notes**

Unsignalized Delay for [EBR, SBR] is excluded from calculations of the approach delay and intersection delay.

| Lane Group | EBL | EBT | EBR | WBL | WBT | WBR | NBL | NBT | SBL | SBT | SBR |
|---|---|---|---|---|---|---|---|---|---|---|---|
| Lane Configurations | | | | | | | | | | | |
| Traffic Volume (vph) | 322 | 53 | 61 | 380 | 98 | 204 | 95 | 1273 | 131 | 1518 | 358 |
| Future Volume (vph) | 322 | 53 | 61 | 380 | 98 | 204 | 95 | 1273 | 131 | 1518 | 358 |
| Turn Type | Prot | NA | Free | Prot | NA | pm+ov | pm+pt | NA | pm+pt | NA | Free |
| Protected Phases | 7 | 4 | | 3 | 8 | 1 | 5 | 2 | 1 | 6 | |
| Permitted Phases | | | Free | | | 8 | 2 | | 6 | | Free |
| Detector Phase | 7 | 4 | | 3 | 8 | 1 | 5 | 2 | 1 | 6 | |
| Switch Phase | | | | | | | | | | | |
| Minimum Initial (s) | 27.0 | 25.0 | | 20.0 | 15.0 | 15.0 | 15.0 | 30.0 | 15.0 | 30.0 | |
| Minimum Split (s) | 32.0 | 45.0 | | 35.0 | 30.0 | 20.0 | 30.0 | 35.0 | 20.0 | 35.0 | |
| Total Split (s) | 32.0 | 45.0 | | 35.0 | 48.0 | 21.0 | 30.0 | 84.0 | 21.0 | 75.0 | |
| Total Split (%) | 17.3% | 24.3% | | 18.9% | 25.9% | 11.4% | 16.2% | 45.4% | 11.4% | 40.5% | |
| Yellow Time (s) | 4.0 | 4.0 | | 4.0 | 4.0 | 4.0 | 4.0 | 4.0 | 4.0 | 4.0 | |
| All-Red Time (s) | 1.0 | 1.0 | | 1.0 | 1.0 | 1.0 | 1.0 | 1.0 | 1.0 | 1.0 | |
| Lost Time Adjust (s) | 0.0 | 0.0 | | 0.0 | 0.0 | 0.0 | 0.0 | 0.0 | 0.0 | 0.0 | |
| Total Lost Time (s) | 5.0 | 5.0 | | 5.0 | 5.0 | 5.0 | 5.0 | 5.0 | 5.0 | 5.0 | |
| Lead/Lag | Lead | Lag | | Lead | Lag | Lead | Lead | Lag | Lead | Lag | |
| Lead-Lag Optimize? | | | | | | | | | | | |
| Recall Mode | None | None | | None | None | None | None | C-Max | None | C-Max | |

**Intersection Summary**

Cycle Length: 185
Actuated Cycle Length: 185
Offset: 75 (41%), Referenced to phase 2:NBTL and 6:SBTL, Start of Green
Natural Cycle: 145
Control Type: Actuated-Coordinated

Splits and Phases: 1: Cerrillos Rd. & Beckner Rd.

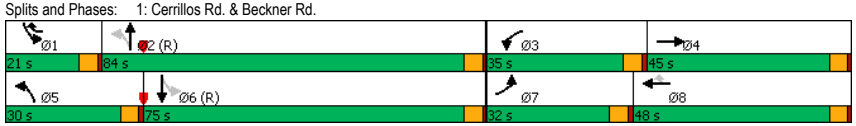






| Movement | EBL | EBT | EBR | WBL | WBT | WBR | NBL | NBT | NBR | SBL | SBT | SBR |
|---|---|---|---|---|---|---|---|---|---|---|---|---|
| Lane Configurations | | | | | | | | | | | | |
| Traffic Volume (veh/h) | 322 | 53 | 61 | 380 | 98 | 204 | 95 | 1273 | 224 | 131 | 1518 | 358 |
| Future Volume (veh/h) | 322 | 53 | 61 | 380 | 98 | 204 | 95 | 1273 | 224 | 131 | 1518 | 358 |
| Initial Q (Qb), veh | 0 | 0 | 0 | 0 | 0 | 0 | 0 | 0 | 0 | 0 | 0 | 0 |
| Ped-Bike Adj(A_pbT) | 1.00 | | 1.00 | 1.00 | | 1.00 | 1.00 | | 1.00 | 1.00 | | 1.00 |
| Parking Bus, Adj | 1.00 | 1.00 | 1.00 | 1.00 | 1.00 | 1.00 | 1.00 | 1.00 | 1.00 | 1.00 | 1.00 | 1.00 |
| Work Zone On Approach | | No | | | No | | | No | | | No | |
| Adj Sat Flow, veh/h/ln | 1870 | 1870 | 1870 | 1870 | 1870 | 1870 | 1870 | 1870 | 1870 | 1870 | 1870 | 1870 |
| Adj Flow Rate, veh/h | 335 | 55 | 0 | 396 | 102 | 212 | 99 | 1326 | 233 | 136 | 1581 | 0 |
| Peak Hour Factor | 0.96 | 0.96 | 0.96 | 0.96 | 0.96 | 0.96 | 0.96 | 0.96 | 0.96 | 0.96 | 0.96 | 0.96 |
| Percent Heavy Veh, % | 2 | 2 | 2 | 2 | 2 | 2 | 2 | 2 | 2 | 2 | 2 | 2 |
| Cap, veh/h | 504 | 290 | | 443 | 257 | 346 | 353 | 2305 | 405 | 290 | 1876 | |
| Arrive On Green | 0.15 | 0.16 | 0.00 | 0.13 | 0.14 | 0.14 | 0.08 | 0.53 | 0.53 | 0.16 | 1.00 | 0.00 |
| Sat Flow, veh/h | 3456 | 1870 | 1585 | 3456 | 1870 | 1585 | 1781 | 4369 | 767 | 1781 | 3554 | 1585 |
| Grp Volume(v), veh/h | 335 | 55 | 0 | 396 | 102 | 212 | 99 | 1033 | 526 | 136 | 1581 | 0 |
| Grp Sat Flow(s),veh/h/ln | 1728 | 1870 | 1585 | 1728 | 1870 | 1585 | 1781 | 1702 | 1732 | 1781 | 1777 | 1585 |
| Q Serve(g_s), s | 17.0 | 4.7 | 0.0 | 20.9 | 9.2 | 22.3 | 4.3 | 38.1 | 38.1 | 5.9 | 0.0 | 0.0 |
| Cycle Q Clear(g_c), s | 17.0 | 4.7 | 0.0 | 20.9 | 9.2 | 22.3 | 4.3 | 38.1 | 38.1 | 5.9 | 0.0 | 0.0 |
| Prop In Lane | 1.00 | | 1.00 | 1.00 | | 1.00 | 1.00 | | 0.44 | 1.00 | | 1.00 |
| Lane Grp Cap(c), veh/h | 504 | 290 | | 443 | 257 | 346 | 353 | 1796 | 914 | 290 | 1876 | |
| V/C Ratio(X) | 0.66 | 0.19 | | 0.89 | 0.40 | 0.61 | 0.28 | 0.58 | 0.58 | 0.47 | 0.84 | |
| Avail Cap(c_a), veh/h | 504 | 404 | | 560 | 435 | 497 | 450 | 1796 | 914 | 299 | 1876 | |
| HCM Platoon Ratio | 1.00 | 1.00 | 1.00 | 1.00 | 1.00 | 1.00 | 1.00 | 1.00 | 1.00 | 2.00 | 2.00 | 2.00 |
| Upstream Filter(I) | 1.00 | 1.00 | 0.00 | 1.00 | 1.00 | 1.00 | 1.00 | 1.00 | 1.00 | 0.45 | 0.45 | 0.00 |
| Uniform Delay (d), s/veh | 74.7 | 68.0 | 0.0 | 79.4 | 72.8 | 65.2 | 15.0 | 29.6 | 29.6 | 19.7 | 0.0 | 0.0 |
| Incr Delay (d2), s/veh | 3.3 | 0.3 | 0.0 | 14.3 | 1.0 | 1.8 | 0.4 | 1.3 | 2.6 | 0.5 | 2.2 | 0.0 |
| Initial Q Delay(d3),s/veh | 0.0 | 0.0 | 0.0 | 0.0 | 0.0 | 0.0 | 0.0 | 0.0 | 0.0 | 0.0 | 0.0 | 0.0 |
| %ile BackOfQ(95%),veh/ln | 12.3 | 4.1 | 0.0 | 15.3 | 7.9 | 14.1 | 3.2 | 22.2 | 22.9 | 3.9 | 1.1 | 0.0 |
| Unsig. Movement Delay, s/veh | | | | | | | | | | | | |
| LnGrp Delay(d),s/veh | 78.0 | 68.3 | 0.0 | 93.7 | 73.8 | 67.0 | 15.5 | 31.0 | 32.3 | 20.2 | 2.2 | 0.0 |
| LnGrp LOS | E | E | | F | E | E | B | C | C | C | A | |
| Approach Vol, veh/h | | 390 | | | 710 | | | 1658 | | | 1717 | |
| Approach Delay, s/veh | | 76.6 | | | 82.9 | | | 30.5 | | | 3.7 | |
| Approach LOS | | E | | | F | | | C | | | A | |

| Timer - Assigned Phs | 1 | 2 | 3 | 4 | 5 | 6 | 7 | 8 |
|---|---|---|---|---|---|---|---|---|
| Phs Duration (G+Y+Rc), s | 20.0 | 102.6 | 28.7 | 33.7 | 19.9 | 102.7 | 32.0 | 30.4 |
| Change Period (Y+Rc), s | 5.0 | 5.0 | 5.0 | 5.0 | 5.0 | 5.0 | 5.0 | 5.0 |
| Max Green Setting (Gmax), s | 16.0 | 79.0 | 30.0 | 40.0 | 25.0 | 70.0 | 27.0 | 43.0 |
| Max Q Clear Time (g_c+I1), s | 7.9 | 40.1 | 22.9 | 6.7 | 6.3 | 2.0 | 19.0 | 24.3 |
| Green Ext Time (p_c), s | 0.2 | 13.7 | 0.8 | 0.2 | 0.2 | 18.2 | 0.7 | 1.1 |

**Intersection Summary**

| | |
|---|---|
| HCM 6th Ctrl Delay | 32.5 |
| HCM 6th LOS | C |

**Notes**

Unsignalized Delay for [EBR, SBR] is excluded from calculations of the approach delay and intersection delay.

| Lane Group | EBL | EBT | EBR | WBL | WBT | WBR | NBL | NBT | SBL | SBT | SBR |
|---|---|---|---|---|---|---|---|---|---|---|---|
| Lane Configurations | | | | | | | | | | | |
| Traffic Volume (vph) | 124 | 64 | 161 | 84 | 86 | 38 | 240 | 1073 | 47 | 684 | 63 |
| Future Volume (vph) | 124 | 64 | 161 | 84 | 86 | 38 | 240 | 1073 | 47 | 684 | 63 |
| Turn Type | Prot | NA | Perm | Prot | NA | Perm | pm+pt | NA | pm+pt | NA | Perm |
| Protected Phases | 7 | 4 | | 3 | 8 | | 5 | 2 | 1 | 6 | |
| Permitted Phases | | | 4 | | | 8 | 2 | | 6 | | 6 |
| Detector Phase | 7 | 4 | 4 | 3 | 8 | 8 | 5 | 2 | 1 | 6 | 6 |
| Switch Phase | | | | | | | | | | | |
| Minimum Initial (s) | 15.0 | 15.0 | 15.0 | 20.0 | 20.0 | 20.0 | 20.0 | 40.0 | 15.0 | 35.0 | 35.0 |
| Minimum Split (s) | 20.0 | 23.0 | 23.0 | 25.0 | 25.0 | 25.0 | 25.0 | 45.0 | 20.0 | 40.0 | 40.0 |
| Total Split (s) | 33.0 | 36.0 | 36.0 | 38.0 | 41.0 | 41.0 | 38.0 | 58.0 | 33.0 | 53.0 | 53.0 |
| Total Split (%) | 20.0% | 21.8% | 21.8% | 23.0% | 24.8% | 24.8% | 23.0% | 35.2% | 20.0% | 32.1% | 32.1% |
| Yellow Time (s) | 4.0 | 4.0 | 4.0 | 4.0 | 4.0 | 4.0 | 4.0 | 4.0 | 4.0 | 4.0 | 4.0 |
| All-Red Time (s) | 1.0 | 1.0 | 1.0 | 1.0 | 1.0 | 1.0 | 1.0 | 1.0 | 1.0 | 1.0 | 1.0 |
| Lost Time Adjust (s) | 0.0 | 0.0 | 0.0 | 0.0 | 0.0 | 0.0 | 0.0 | 0.0 | 0.0 | 0.0 | 0.0 |
| Total Lost Time (s) | 5.0 | 5.0 | 5.0 | 5.0 | 5.0 | 5.0 | 5.0 | 5.0 | 5.0 | 5.0 | 5.0 |
| Lead/Lag | Lead | Lag | Lag | Lead | Lag | Lag | Lead | Lag | Lead | Lag | Lag |
| Lead-Lag Optimize? | | | | | | | | | | | |
| Recall Mode | None | None | None | None | None | None | None | C-Max | None | C-Max | C-Max |

**Intersection Summary**

Cycle Length: 165
Actuated Cycle Length: 165
Offset: 40 (24%), Referenced to phase 2:NBTL and 6:SBTL, Start of Green
Natural Cycle: 115
Control Type: Actuated-Coordinated
Description: Wellness Way (Herrera)

Splits and Phases: 2: Cerrillos Rd. & Herrera Dr./Wellness Way

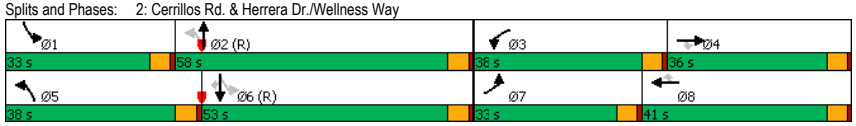






| Movement | EBL | EBT | EBR | WBL | WBT | WBR | NBL | NBT | NBR | SBL | SBT | SBR |
|---|---|---|---|---|---|---|---|---|---|---|---|---|
| Lane Configurations | | | | | | | | | | | | |
| Traffic Volume (veh/h) | 124 | 64 | 161 | 84 | 86 | 38 | 240 | 1073 | 95 | 47 | 684 | 63 |
| Future Volume (veh/h) | 124 | 64 | 161 | 84 | 86 | 38 | 240 | 1073 | 95 | 47 | 684 | 63 |
| Initial Q (Qb), veh | 0 | 0 | 0 | 0 | 0 | 0 | 0 | 0 | 0 | 0 | 0 | 0 |
| Ped-Bike Adj(A_pbT) | 1.00 | | 1.00 | 1.00 | | 1.00 | 1.00 | | 1.00 | 1.00 | | 1.00 |
| Parking Bus, Adj | 1.00 | 1.00 | 1.00 | 1.00 | 1.00 | 1.00 | 1.00 | 1.00 | 1.00 | 1.00 | 1.00 | 1.00 |
| Work Zone On Approach | | No | | | No | | | No | | | No | |
| Adj Sat Flow, veh/h/ln | 1870 | 1870 | 1870 | 1870 | 1870 | 1870 | 1870 | 1870 | 1870 | 1870 | 1870 | 1870 |
| Adj Flow Rate, veh/h | 146 | 75 | 189 | 99 | 101 | 45 | 282 | 1262 | 112 | 55 | 805 | 74 |
| Peak Hour Factor | 0.85 | 0.85 | 0.85 | 0.85 | 0.85 | 0.85 | 0.85 | 0.85 | 0.85 | 0.85 | 0.85 | 0.85 |
| Percent Heavy Veh, % | 2 | 2 | 2 | 2 | 2 | 2 | 2 | 2 | 2 | 2 | 2 | 2 |
| Cap, veh/h | 314 | 475 | 212 | 414 | 305 | 258 | 486 | 2585 | 229 | 392 | 1791 | 799 |
| Arrive On Green | 0.09 | 0.13 | 0.13 | 0.12 | 0.16 | 0.16 | 0.24 | 1.00 | 1.00 | 0.08 | 0.50 | 0.50 |
| Sat Flow, veh/h | 3456 | 3554 | 1585 | 3456 | 1870 | 1585 | 1781 | 4774 | 424 | 1781 | 3554 | 1585 |
| Grp Volume(v), veh/h | 146 | 75 | 189 | 99 | 101 | 45 | 282 | 900 | 474 | 55 | 805 | 74 |
| Grp Sat Flow(s),veh/h/ln | 1728 | 1777 | 1585 | 1728 | 1870 | 1585 | 1781 | 1702 | 1794 | 1781 | 1777 | 1585 |
| Q Serve(g_s), s | 6.6 | 3.1 | 19.3 | 4.3 | 7.9 | 4.0 | 12.0 | 0.0 | 0.0 | 2.2 | 24.0 | 4.0 |
| Cycle Q Clear(g_c), s | 6.6 | 3.1 | 19.3 | 4.3 | 7.9 | 4.0 | 12.0 | 0.0 | 0.0 | 2.2 | 24.0 | 4.0 |
| Prop In Lane | 1.00 | | 1.00 | 1.00 | | 1.00 | 1.00 | | 0.24 | 1.00 | | 1.00 |
| Lane Grp Cap(c), veh/h | 314 | 475 | 212 | 414 | 305 | 258 | 486 | 1843 | 972 | 392 | 1791 | 799 |
| V/C Ratio(X) | 0.47 | 0.16 | 0.89 | 0.24 | 0.33 | 0.17 | 0.58 | 0.49 | 0.49 | 0.14 | 0.45 | 0.09 |
| Avail Cap(c_a), veh/h | 586 | 668 | 298 | 691 | 408 | 346 | 626 | 1843 | 972 | 545 | 1791 | 799 |
| HCM Platoon Ratio | 1.00 | 1.00 | 1.00 | 1.00 | 1.00 | 1.00 | 2.00 | 2.00 | 2.00 | 1.00 | 1.00 | 1.00 |
| Upstream Filter(I) | 1.00 | 1.00 | 1.00 | 1.00 | 1.00 | 1.00 | 0.80 | 0.80 | 0.80 | 1.00 | 1.00 | 1.00 |
| Uniform Delay (d), s/veh | 71.2 | 63.2 | 70.3 | 65.8 | 61.1 | 59.5 | 14.1 | 0.0 | 0.0 | 14.5 | 26.3 | 21.3 |
| Incr Delay (d2), s/veh | 1.1 | 0.2 | 20.9 | 0.3 | 0.6 | 0.3 | 0.9 | 0.7 | 1.4 | 0.2 | 0.8 | 0.2 |
| Initial Q Delay(d3),s/veh | 0.0 | 0.0 | 0.0 | 0.0 | 0.0 | 0.0 | 0.0 | 0.0 | 0.0 | 0.0 | 0.0 | 0.0 |
| %ile BackOfQ(50%),veh/ln | 3.0 | 1.4 | 9.1 | 1.9 | 3.8 | 1.7 | 3.8 | 0.2 | 0.4 | 0.9 | 10.2 | 1.6 |
| Unsig. Movement Delay, s/veh | | | | | | | | | | | | |
| LnGrp Delay(d),s/veh | 72.3 | 63.4 | 91.1 | 66.1 | 61.7 | 59.8 | 15.0 | 0.7 | 1.4 | 14.6 | 27.1 | 21.5 |
| LnGrp LOS | E | E | F | E | E | E | B | A | A | B | C | C |
| Approach Vol, veh/h | | 410 | | | 245 | | | 1656 | | | 934 | |
| Approach Delay, s/veh | | 79.3 | | | 63.1 | | | 3.4 | | | 25.9 | |
| Approach LOS | | E | | | E | | | A | | | C | |

| Timer - Assigned Phs | 1 | 2 | 3 | 4 | 5 | 6 | 7 | 8 |
|---|---|---|---|---|---|---|---|---|
| Phs Duration (G+Y+Rc), s | 18.8 | 94.3 | 24.8 | 27.1 | 25.0 | 88.1 | 20.0 | 31.9 |
| Change Period (Y+Rc), s | 5.0 | 5.0 | 5.0 | 5.0 | 5.0 | 5.0 | 5.0 | 5.0 |
| Max Green Setting (Gmax), s | 28.0 | 53.0 | 33.0 | 31.0 | 33.0 | 48.0 | 28.0 | 36.0 |
| Max Q Clear Time (g_c+I1), s | 4.2 | 2.0 | 6.3 | 21.3 | 14.0 | 26.0 | 8.6 | 9.9 |
| Green Ext Time (p_c), s | 0.1 | 11.7 | 0.3 | 0.7 | 0.7 | 5.5 | 0.4 | 0.7 |

**Intersection Summary**

| | |
|---|---|
| HCM 6th Ctrl Delay | 24.0 |
| HCM 6th LOS | C |



| Lane Group | EBL | EBT | EBR | WBL | WBT | WBR | NBL | NBT | SBL | SBT | SBR |
|---|---|---|---|---|---|---|---|---|---|---|---|
| Lane Configurations | | | | | | | | | | | |
| Traffic Volume (vph) | 129 | 121 | 184 | 92 | 131 | 68 | 275 | 1160 | 87 | 738 | 66 |
| Future Volume (vph) | 129 | 121 | 184 | 92 | 131 | 68 | 275 | 1160 | 87 | 738 | 66 |
| Turn Type | Prot | NA | Perm | Prot | NA | Perm | pm+pt | NA | pm+pt | NA | Perm |
| Protected Phases | 7 | 4 | | 3 | 8 | | 5 | 2 | 1 | 6 | |
| Permitted Phases | | | 4 | | | 8 | 2 | | 6 | | 6 |
| Detector Phase | 7 | 4 | 4 | 3 | 8 | 8 | 5 | 2 | 1 | 6 | 6 |
| Switch Phase | | | | | | | | | | | |
| Minimum Initial (s) | 15.0 | 15.0 | 15.0 | 20.0 | 20.0 | 20.0 | 20.0 | 40.0 | 15.0 | 35.0 | 35.0 |
| Minimum Split (s) | 20.0 | 23.0 | 23.0 | 25.0 | 25.0 | 25.0 | 25.0 | 45.0 | 20.0 | 40.0 | 40.0 |
| Total Split (s) | 33.0 | 36.0 | 36.0 | 38.0 | 41.0 | 41.0 | 38.0 | 58.0 | 33.0 | 53.0 | 53.0 |
| Total Split (%) | 20.0% | 21.8% | 21.8% | 23.0% | 24.8% | 24.8% | 23.0% | 35.2% | 20.0% | 32.1% | 32.1% |
| Yellow Time (s) | 4.0 | 4.0 | 4.0 | 4.0 | 4.0 | 4.0 | 4.0 | 4.0 | 4.0 | 4.0 | 4.0 |
| All-Red Time (s) | 1.0 | 1.0 | 1.0 | 1.0 | 1.0 | 1.0 | 1.0 | 1.0 | 1.0 | 1.0 | 1.0 |
| Lost Time Adjust (s) | 0.0 | 0.0 | 0.0 | 0.0 | 0.0 | 0.0 | 0.0 | 0.0 | 0.0 | 0.0 | 0.0 |
| Total Lost Time (s) | 5.0 | 5.0 | 5.0 | 5.0 | 5.0 | 5.0 | 5.0 | 5.0 | 5.0 | 5.0 | 5.0 |
| Lead/Lag | Lead | Lag | Lag | Lead | Lag | Lag | Lead | Lag | Lead | Lag | Lag |
| Lead-Lag Optimize? | | | | | | | | | | | |
| Recall Mode | None | None | None | None | None | None | None | C-Max | None | C-Max | C-Max |

**Intersection Summary**

Cycle Length: 165
Actuated Cycle Length: 165
Offset: 40 (24%), Referenced to phase 2:NBTL and 6:SBTL, Start of Green
Natural Cycle: 115
Control Type: Actuated-Coordinated
Description: Wellness Way (Herrera)

Splits and Phases: 2: Cerrillos Rd. & Herrera Dr./Wellness Way

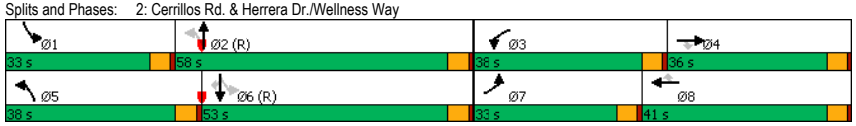








| Movement | EBL | EBT | EBR | WBL | WBT | WBR | NBL | NBT | NBR | SBL | SBT | SBR |
|---|---|---|---|---|---|---|---|---|---|---|---|---|
| Lane Configurations | | | | | | | | | | | | |
| Traffic Volume (veh/h) | 129 | 121 | 184 | 92 | 131 | 68 | 275 | 1160 | 151 | 87 | 738 | 66 |
| Future Volume (veh/h) | 129 | 121 | 184 | 92 | 131 | 68 | 275 | 1160 | 151 | 87 | 738 | 66 |
| Initial Q (Qb), veh | 0 | 0 | 0 | 0 | 0 | 0 | 0 | 0 | 0 | 0 | 0 | 0 |
| Ped-Bike Adj(A_pbT) | 1.00 | | 1.00 | 1.00 | | 1.00 | 1.00 | | 1.00 | 1.00 | | 1.00 |
| Parking Bus, Adj | 1.00 | 1.00 | 1.00 | 1.00 | 1.00 | 1.00 | 1.00 | 1.00 | 1.00 | 1.00 | 1.00 | 1.00 |
| Work Zone On Approach | | No | | | No | | | No | | | No | |
| Adj Sat Flow, veh/h/ln | 1870 | 1870 | 1870 | 1870 | 1870 | 1870 | 1870 | 1870 | 1870 | 1870 | 1870 | 1870 |
| Adj Flow Rate, veh/h | 152 | 142 | 216 | 108 | 154 | 80 | 324 | 1365 | 178 | 102 | 868 | 78 |
| Peak Hour Factor | 0.85 | 0.85 | 0.85 | 0.85 | 0.85 | 0.85 | 0.85 | 0.85 | 0.85 | 0.85 | 0.85 | 0.85 |
| Percent Heavy Veh, % | 2 | 2 | 2 | 2 | 2 | 2 | 2 | 2 | 2 | 2 | 2 | 2 |
| Cap, veh/h | 314 | 538 | 240 | 416 | 339 | 287 | 449 | 2363 | 308 | 367 | 1726 | 770 |
| Arrive On Green | 0.09 | 0.15 | 0.15 | 0.12 | 0.18 | 0.18 | 0.24 | 1.00 | 1.00 | 0.09 | 0.49 | 0.49 |
| Sat Flow, veh/h | 3456 | 3554 | 1585 | 3456 | 1870 | 1585 | 1781 | 4571 | 596 | 1781 | 3554 | 1585 |
| Grp Volume(v), veh/h | 152 | 142 | 216 | 108 | 154 | 80 | 324 | 1016 | 527 | 102 | 868 | 78 |
| Grp Sat Flow(s),veh/h/ln | 1728 | 1777 | 1585 | 1728 | 1870 | 1585 | 1781 | 1702 | 1763 | 1781 | 1777 | 1585 |
| Q Serve(g_s), s | 6.9 | 5.8 | 22.1 | 4.7 | 12.1 | 7.2 | 15.5 | 0.0 | 0.0 | 4.3 | 27.4 | 4.4 |
| Cycle Q Clear(g_c), s | 6.9 | 5.8 | 22.1 | 4.7 | 12.1 | 7.2 | 15.5 | 0.0 | 0.0 | 4.3 | 27.4 | 4.4 |
| Prop In Lane | 1.00 | | 1.00 | 1.00 | | 1.00 | 1.00 | | 0.34 | 1.00 | | 1.00 |
| Lane Grp Cap(c), veh/h | 314 | 538 | 240 | 416 | 339 | 287 | 449 | 1759 | 911 | 367 | 1726 | 770 |
| V/C Ratio(X) | 0.48 | 0.26 | 0.90 | 0.26 | 0.45 | 0.28 | 0.72 | 0.58 | 0.58 | 0.28 | 0.50 | 0.10 |
| Avail Cap(c_a), veh/h | 586 | 668 | 298 | 691 | 408 | 346 | 589 | 1759 | 911 | 509 | 1726 | 770 |
| HCM Platoon Ratio | 1.00 | 1.00 | 1.00 | 1.00 | 1.00 | 1.00 | 2.00 | 2.00 | 2.00 | 1.00 | 1.00 | 1.00 |
| Upstream Filter(I) | 1.00 | 1.00 | 1.00 | 1.00 | 1.00 | 1.00 | 0.60 | 0.60 | 0.60 | 1.00 | 1.00 | 1.00 |
| Uniform Delay (d), s/veh | 71.3 | 61.9 | 68.8 | 65.9 | 60.3 | 58.3 | 17.1 | 0.0 | 0.0 | 15.7 | 28.9 | 23.0 |
| Incr Delay (d2), s/veh | 1.2 | 0.3 | 24.7 | 0.3 | 1.0 | 0.5 | 1.8 | 0.8 | 1.6 | 0.4 | 1.1 | 0.3 |
| Initial Q Delay(d3),s/veh | 0.0 | 0.0 | 0.0 | 0.0 | 0.0 | 0.0 | 0.0 | 0.0 | 0.0 | 0.0 | 0.0 | 0.0 |
| %ile BackOfQ(95%),veh/ln | 5.6 | 4.8 | 16.0 | 3.8 | 9.9 | 5.3 | 7.6 | 0.4 | 0.7 | 3.2 | 17.4 | 3.2 |
| Unsig. Movement Delay, s/veh | | | | | | | | | | | | |
| LnGrp Delay(d),s/veh | 72.5 | 62.1 | 93.5 | 66.2 | 61.3 | 58.8 | 19.0 | 0.8 | 1.6 | 16.2 | 29.9 | 23.2 |
| LnGrp LOS | E | E | F | E | E | E | B | A | A | B | C | C |
| Approach Vol, veh/h | | 510 | | | 342 | | | 1867 | | | 1048 | |
| Approach Delay, s/veh | | 78.5 | | | 62.2 | | | 4.2 | | | 28.1 | |
| Approach LOS | | E | | | E | | | A | | | C | |

| Timer - Assigned Phs | 1 | 2 | 3 | 4 | 5 | 6 | 7 | 8 |
|---|---|---|---|---|---|---|---|---|
| Phs Duration (G+Y+Rc), s | 19.9 | 90.3 | 24.9 | 30.0 | 25.0 | 85.1 | 20.0 | 34.9 |
| Change Period (Y+Rc), s | 5.0 | 5.0 | 5.0 | 5.0 | 5.0 | 5.0 | 5.0 | 5.0 |
| Max Green Setting (Gmax), s | 28.0 | 53.0 | 33.0 | 31.0 | 33.0 | 48.0 | 28.0 | 36.0 |
| Max Q Clear Time (g_c+I1), s | 6.3 | 2.0 | 6.7 | 24.1 | 17.5 | 29.4 | 8.9 | 14.1 |
| Green Ext Time (p_c), s | 0.2 | 14.3 | 0.3 | 0.9 | 0.8 | 5.6 | 0.4 | 1.1 |

**Intersection Summary**

| | |
|---|---|
| HCM 6th Ctrl Delay | 26.2 |
| HCM 6th LOS | C |



| Lane Group | EBL | EBT | EBR | WBL | WBT | WBR | NBL | NBT | SBL | SBT | SBR |
|---|---|---|---|---|---|---|---|---|---|---|---|
| Lane Configurations | | | | | | | | | | | |
| Traffic Volume (vph) | 129 | 121 | 184 | 92 | 131 | 68 | 275 | 1160 | 87 | 738 | 66 |
| Future Volume (vph) | 129 | 121 | 184 | 92 | 131 | 68 | 275 | 1160 | 87 | 738 | 66 |
| Turn Type | Prot | NA | pm+ov | Prot | NA | pm+ov | pm+pt | NA | pm+pt | NA | Perm |
| Protected Phases | 7 | 4 | 5 | 3 | 8 | 1 | 5 | 2 | 1 | 6 | |
| Permitted Phases | | | 4 | | | 8 | 2 | | 6 | | 6 |
| Detector Phase | 7 | 4 | 5 | 3 | 8 | 1 | 5 | 2 | 1 | 6 | 6 |
| Switch Phase | | | | | | | | | | | |
| Minimum Initial (s) | 15.0 | 15.0 | 20.0 | 20.0 | 20.0 | 15.0 | 20.0 | 40.0 | 15.0 | 35.0 | 35.0 |
| Minimum Split (s) | 20.0 | 23.0 | 25.0 | 25.0 | 25.0 | 20.0 | 25.0 | 45.0 | 20.0 | 40.0 | 40.0 |
| Total Split (s) | 33.0 | 36.0 | 38.0 | 38.0 | 41.0 | 33.0 | 38.0 | 58.0 | 33.0 | 53.0 | 53.0 |
| Total Split (%) | 20.0% | 21.8% | 23.0% | 23.0% | 24.8% | 20.0% | 23.0% | 35.2% | 20.0% | 32.1% | 32.1% |
| Yellow Time (s) | 4.0 | 4.0 | 4.0 | 4.0 | 4.0 | 4.0 | 4.0 | 4.0 | 4.0 | 4.0 | 4.0 |
| All-Red Time (s) | 1.0 | 1.0 | 1.0 | 1.0 | 1.0 | 1.0 | 1.0 | 1.0 | 1.0 | 1.0 | 1.0 |
| Lost Time Adjust (s) | 0.0 | 0.0 | 0.0 | 0.0 | 0.0 | 0.0 | 0.0 | 0.0 | 0.0 | 0.0 | 0.0 |
| Total Lost Time (s) | 5.0 | 5.0 | 5.0 | 5.0 | 5.0 | 5.0 | 5.0 | 5.0 | 5.0 | 5.0 | 5.0 |
| Lead/Lag | Lead | Lag | Lead | Lead | Lag | Lead | Lead | Lag | Lead | Lag | Lag |
| Lead-Lag Optimize? | | | | | | | | | | | |
| Recall Mode | None | None | None | None | None | None | None | C-Max | None | C-Max | C-Max |

**Intersection Summary**

Cycle Length: 165
Actuated Cycle Length: 165
Offset: 40 (24%), Referenced to phase 2:NBTL and 6:SBTL, Start of Green
Natural Cycle: 115
Control Type: Actuated-Coordinated
Description: Wellness Way (Herrera)

Splits and Phases: 2: Cerrillos Rd. & Herrera Dr./Wellness Way










| Movement | EBL | EBT | EBR | WBL | WBT | WBR | NBL | NBT | NBR | SBL | SBT | SBR |
|---|---|---|---|---|---|---|---|---|---|---|---|---|
| Lane Configurations | | | | | | | | | | | | |
| Traffic Volume (veh/h) | 129 | 121 | 184 | 92 | 131 | 68 | 275 | 1160 | 151 | 87 | 738 | 66 |
| Future Volume (veh/h) | 129 | 121 | 184 | 92 | 131 | 68 | 275 | 1160 | 151 | 87 | 738 | 66 |
| Initial Q (Qb), veh | 0 | 0 | 0 | 0 | 0 | 0 | 0 | 0 | 0 | 0 | 0 | 0 |
| Ped-Bike Adj(A_pbT) | 1.00 | | 1.00 | 1.00 | | 1.00 | 1.00 | | 1.00 | 1.00 | | 1.00 |
| Parking Bus, Adj | 1.00 | 1.00 | 1.00 | 1.00 | 1.00 | 1.00 | 1.00 | 1.00 | 1.00 | 1.00 | 1.00 | 1.00 |
| Work Zone On Approach | | No | | | No | | | No | | | No | |
| Adj Sat Flow, veh/h/ln | 1870 | 1870 | 1870 | 1870 | 1870 | 1870 | 1870 | 1870 | 1870 | 1870 | 1870 | 1870 |
| Adj Flow Rate, veh/h | 152 | 142 | 216 | 108 | 154 | 80 | 324 | 1365 | 178 | 102 | 868 | 78 |
| Peak Hour Factor | 0.85 | 0.85 | 0.85 | 0.85 | 0.85 | 0.85 | 0.85 | 0.85 | 0.85 | 0.85 | 0.85 | 0.85 |
| Percent Heavy Veh, % | 2 | 2 | 2 | 2 | 2 | 2 | 2 | 2 | 2 | 2 | 2 | 2 |
| Cap, veh/h | 314 | 484 | 408 | 416 | 310 | 405 | 461 | 2433 | 317 | 372 | 1781 | 794 |
| Arrive On Green | 0.09 | 0.14 | 0.14 | 0.12 | 0.17 | 0.17 | 0.24 | 1.00 | 1.00 | 0.09 | 0.50 | 0.50 |
| Sat Flow, veh/h | 3456 | 3554 | 1585 | 3456 | 1870 | 1585 | 1781 | 4571 | 596 | 1781 | 3554 | 1585 |
| Grp Volume(v), veh/h | 152 | 142 | 216 | 108 | 154 | 80 | 324 | 1016 | 527 | 102 | 868 | 78 |
| Grp Sat Flow(s),veh/h/ln | 1728 | 1777 | 1585 | 1728 | 1870 | 1585 | 1781 | 1702 | 1763 | 1781 | 1777 | 1585 |
| Q Serve(g_s), s | 6.9 | 5.9 | 19.3 | 4.7 | 12.4 | 6.5 | 14.9 | 0.0 | 0.0 | 4.1 | 26.6 | 4.3 |
| Cycle Q Clear(g_c), s | 6.9 | 5.9 | 19.3 | 4.7 | 12.4 | 6.5 | 14.9 | 0.0 | 0.0 | 4.1 | 26.6 | 4.3 |
| Prop In Lane | 1.00 | | 1.00 | 1.00 | | 1.00 | 1.00 | | 0.34 | 1.00 | | 1.00 |
| Lane Grp Cap(c), veh/h | 314 | 484 | 408 | 416 | 310 | 405 | 461 | 1812 | 938 | 372 | 1781 | 794 |
| V/C Ratio(X) | 0.48 | 0.29 | 0.53 | 0.26 | 0.50 | 0.20 | 0.70 | 0.56 | 0.56 | 0.27 | 0.49 | 0.10 |
| Avail Cap(c_a), veh/h | 586 | 668 | 490 | 691 | 408 | 489 | 601 | 1812 | 938 | 514 | 1781 | 794 |
| HCM Platoon Ratio | 1.00 | 1.00 | 1.00 | 1.00 | 1.00 | 1.00 | 2.00 | 2.00 | 2.00 | 1.00 | 1.00 | 1.00 |
| Upstream Filter(I) | 1.00 | 1.00 | 1.00 | 1.00 | 1.00 | 1.00 | 0.67 | 0.67 | 0.67 | 1.00 | 1.00 | 1.00 |
| Uniform Delay (d), s/veh | 71.3 | 64.1 | 52.7 | 65.9 | 62.6 | 48.1 | 15.9 | 0.0 | 0.0 | 14.6 | 27.2 | 21.6 |
| Incr Delay (d2), s/veh | 1.2 | 0.3 | 1.1 | 0.3 | 1.2 | 0.2 | 1.7 | 0.8 | 1.6 | 0.4 | 1.0 | 0.2 |
| Initial Q Delay(d3),s/veh | 0.0 | 0.0 | 0.0 | 0.0 | 0.0 | 0.0 | 0.0 | 0.0 | 0.0 | 0.0 | 0.0 | 0.0 |
| %ile BackOfQ(95%),veh/ln | 5.6 | 4.9 | 12.5 | 3.8 | 10.1 | 4.8 | 7.4 | 0.4 | 0.8 | 3.0 | 16.8 | 3.0 |
| Unsig. Movement Delay, s/veh | | | | | | | | | | | | |
| LnGrp Delay(d),s/veh | 72.5 | 64.5 | 53.8 | 66.2 | 63.8 | 48.4 | 17.6 | 0.8 | 1.6 | 15.0 | 28.1 | 21.8 |
| LnGrp LOS | E | E | D | E | E | D | B | A | A | B | C | C |
| Approach Vol, veh/h | | 510 | | | 342 | | | 1867 | | | 1048 | |
| Approach Delay, s/veh | | 62.3 | | | 61.0 | | | 4.0 | | | 26.4 | |
| Approach LOS | | E | | | E | | | A | | | C | |

| Timer - Assigned Phs | 1 | 2 | 3 | 4 | 5 | 6 | 7 | 8 |
|---|---|---|---|---|---|---|---|---|
| Phs Duration (G+Y+Rc), s | 19.9 | 92.8 | 24.9 | 27.5 | 25.0 | 87.7 | 20.0 | 32.3 |
| Change Period (Y+Rc), s | 5.0 | 5.0 | 5.0 | 5.0 | 5.0 | 5.0 | 5.0 | 5.0 |
| Max Green Setting (Gmax), s | 28.0 | 53.0 | 33.0 | 31.0 | 33.0 | 48.0 | 28.0 | 36.0 |
| Max Q Clear Time (g_c+I1), s | 6.1 | 2.0 | 6.7 | 21.3 | 16.9 | 28.6 | 8.9 | 14.4 |
| Green Ext Time (p_c), s | 0.2 | 14.3 | 0.3 | 1.1 | 0.8 | 5.7 | 0.4 | 1.1 |

**Intersection Summary**

| | |
|---|---|
| HCM 6th Ctrl Delay | 23.3 |
| HCM 6th LOS | C |

| Lane Group | EBL | EBT | EBR | WBL | WBT | WBR | NBL | NBT | SBL | SBT | SBR |
|---|---|---|---|---|---|---|---|---|---|---|---|
| Lane Configurations | | | | | | | | | | | |
| Traffic Volume (vph) | 129 | 156 | 214 | 92 | 145 | 120 | 275 | 1177 | 186 | 801 | 66 |
| Future Volume (vph) | 129 | 156 | 214 | 92 | 145 | 120 | 275 | 1177 | 186 | 801 | 66 |
| Turn Type | Prot | NA | Perm | Prot | NA | Perm | pm+pt | NA | pm+pt | NA | Perm |
| Protected Phases | 7 | 4 | | 3 | 8 | | 5 | 2 | 1 | 6 | |
| Permitted Phases | | | 4 | | | 8 | 2 | | 6 | | 6 |
| Detector Phase | 7 | 4 | 4 | 3 | 8 | 8 | 5 | 2 | 1 | 6 | 6 |
| Switch Phase | | | | | | | | | | | |
| Minimum Initial (s) | 15.0 | 15.0 | 15.0 | 20.0 | 20.0 | 20.0 | 20.0 | 40.0 | 15.0 | 35.0 | 35.0 |
| Minimum Split (s) | 20.0 | 23.0 | 23.0 | 25.0 | 25.0 | 25.0 | 25.0 | 45.0 | 20.0 | 40.0 | 40.0 |
| Total Split (s) | 33.0 | 36.0 | 36.0 | 38.0 | 41.0 | 41.0 | 38.0 | 58.0 | 33.0 | 53.0 | 53.0 |
| Total Split (%) | 20.0% | 21.8% | 21.8% | 23.0% | 24.8% | 24.8% | 23.0% | 35.2% | 20.0% | 32.1% | 32.1% |
| Yellow Time (s) | 4.0 | 4.0 | 4.0 | 4.0 | 4.0 | 4.0 | 4.0 | 4.0 | 4.0 | 4.0 | 4.0 |
| All-Red Time (s) | 1.0 | 1.0 | 1.0 | 1.0 | 1.0 | 1.0 | 1.0 | 1.0 | 1.0 | 1.0 | 1.0 |
| Lost Time Adjust (s) | 0.0 | 0.0 | 0.0 | 0.0 | 0.0 | 0.0 | 0.0 | 0.0 | 0.0 | 0.0 | 0.0 |
| Total Lost Time (s) | 5.0 | 5.0 | 5.0 | 5.0 | 5.0 | 5.0 | 5.0 | 5.0 | 5.0 | 5.0 | 5.0 |
| Lead/Lag | Lead | Lag | Lag | Lead | Lag | Lag | Lead | Lag | Lead | Lag | Lag |
| Lead-Lag Optimize? | | | | | | | | | | | |
| Recall Mode | None | None | None | None | None | None | None | C-Max | None | C-Max | C-Max |

**Intersection Summary**

Cycle Length: 165
Actuated Cycle Length: 165
Offset: 40 (24%), Referenced to phase 2:NBTL and 6:SBTL, Start of Green
Natural Cycle: 115
Control Type: Actuated-Coordinated
Description: Wellness Way (Herrera)

Splits and Phases: 2: Cerrillos Rd. & Herrera Dr./Wellness Way

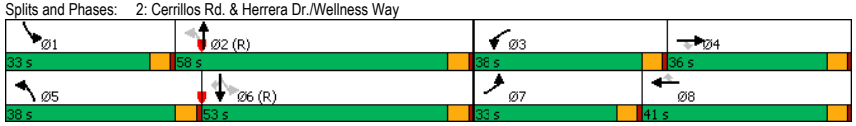






| Movement | EBL | EBT | EBR | WBL | WBT | WBR | NBL | NBT | NBR | SBL | SBT | SBR |
|---|---|---|---|---|---|---|---|---|---|---|---|---|
| Lane Configurations | | | | | | | | | | | | |
| Traffic Volume (veh/h) | 129 | 156 | 214 | 92 | 145 | 120 | 275 | 1177 | 151 | 186 | 801 | 66 |
| Future Volume (veh/h) | 129 | 156 | 214 | 92 | 145 | 120 | 275 | 1177 | 151 | 186 | 801 | 66 |
| Initial Q (Qb), veh | 0 | 0 | 0 | 0 | 0 | 0 | 0 | 0 | 0 | 0 | 0 | 0 |
| Ped-Bike Adj(A_pbT) | 1.00 | | 1.00 | 1.00 | | 1.00 | 1.00 | | 1.00 | 1.00 | | 1.00 |
| Parking Bus, Adj | 1.00 | 1.00 | 1.00 | 1.00 | 1.00 | 1.00 | 1.00 | 1.00 | 1.00 | 1.00 | 1.00 | 1.00 |
| Work Zone On Approach | | No | | | No | | | No | | | No | |
| Adj Sat Flow, veh/h/ln | 1870 | 1870 | 1870 | 1870 | 1870 | 1870 | 1870 | 1870 | 1870 | 1870 | 1870 | 1870 |
| Adj Flow Rate, veh/h | 152 | 184 | 252 | 108 | 171 | 141 | 324 | 1385 | 178 | 219 | 942 | 78 |
| Peak Hour Factor | 0.85 | 0.85 | 0.85 | 0.85 | 0.85 | 0.85 | 0.85 | 0.85 | 0.85 | 0.85 | 0.85 | 0.85 |
| Percent Heavy Veh, % | 2 | 2 | 2 | 2 | 2 | 2 | 2 | 2 | 2 | 2 | 2 | 2 |
| Cap, veh/h | 314 | 613 | 273 | 416 | 378 | 320 | 410 | 2267 | 291 | 359 | 1651 | 737 |
| Arrive On Green | 0.09 | 0.17 | 0.17 | 0.12 | 0.20 | 0.20 | 0.24 | 0.99 | 0.99 | 0.09 | 0.46 | 0.46 |
| Sat Flow, veh/h | 3456 | 3554 | 1585 | 3456 | 1870 | 1585 | 1781 | 4580 | 588 | 1781 | 3554 | 1585 |
| Grp Volume(v), veh/h | 152 | 184 | 252 | 108 | 171 | 141 | 324 | 1029 | 534 | 219 | 942 | 78 |
| Grp Sat Flow(s),veh/h/ln | 1728 | 1777 | 1585 | 1728 | 1870 | 1585 | 1781 | 1702 | 1764 | 1781 | 1777 | 1585 |
| Q Serve(g_s), s | 6.9 | 7.5 | 25.8 | 4.7 | 13.2 | 12.9 | 16.3 | 1.3 | 1.3 | 10.3 | 31.9 | 4.6 |
| Cycle Q Clear(g_c), s | 6.9 | 7.5 | 25.8 | 4.7 | 13.2 | 12.9 | 16.3 | 1.3 | 1.3 | 10.3 | 31.9 | 4.6 |
| Prop In Lane | 1.00 | | 1.00 | 1.00 | | 1.00 | 1.00 | | 0.33 | 1.00 | | 1.00 |
| Lane Grp Cap(c), veh/h | 314 | 613 | 273 | 416 | 378 | 320 | 410 | 1685 | 873 | 359 | 1651 | 737 |
| V/C Ratio(X) | 0.48 | 0.30 | 0.92 | 0.26 | 0.45 | 0.44 | 0.79 | 0.61 | 0.61 | 0.61 | 0.57 | 0.11 |
| Avail Cap(c_a), veh/h | 586 | 668 | 298 | 691 | 408 | 346 | 550 | 1685 | 873 | 499 | 1651 | 737 |
| HCM Platoon Ratio | 1.00 | 1.00 | 1.00 | 1.00 | 1.00 | 1.00 | 2.00 | 2.00 | 2.00 | 1.00 | 1.00 | 1.00 |
| Upstream Filter(I) | 1.00 | 1.00 | 1.00 | 1.00 | 1.00 | 1.00 | 0.53 | 0.53 | 0.53 | 1.00 | 1.00 | 1.00 |
| Uniform Delay (d), s/veh | 71.3 | 59.6 | 67.2 | 65.9 | 57.8 | 57.7 | 20.4 | 0.4 | 0.4 | 18.6 | 32.2 | 24.9 |
| Incr Delay (d2), s/veh | 1.2 | 0.3 | 31.2 | 0.3 | 0.8 | 1.0 | 3.0 | 0.9 | 1.7 | 1.7 | 1.4 | 0.3 |
| Initial Q Delay(d3),s/veh | 0.0 | 0.0 | 0.0 | 0.0 | 0.0 | 0.0 | 0.0 | 0.0 | 0.0 | 0.0 | 0.0 | 0.0 |
| %ile BackOfQ(95%),veh/ln | 5.6 | 6.2 | 18.7 | 3.8 | 10.6 | 9.1 | 8.0 | 0.7 | 1.1 | 7.8 | 19.9 | 3.3 |
| Unsig. Movement Delay, s/veh | | | | | | | | | | | | |
| LnGrp Delay(d),s/veh | 72.5 | 59.8 | 98.3 | 66.2 | 58.7 | 58.6 | 23.4 | 1.3 | 2.1 | 20.3 | 33.6 | 25.2 |
| LnGrp LOS | E | E | F | E | E | E | C | A | A | C | C | C |
| Approach Vol, veh/h | | 588 | | | 420 | | | 1887 | | | 1239 | |
| Approach Delay, s/veh | | 79.6 | | | 60.6 | | | 5.3 | | | 30.7 | |
| Approach LOS | | E | | | E | | | A | | | C | |

| Timer - Assigned Phs | 1 | 2 | 3 | 4 | 5 | 6 | 7 | 8 |
|---|---|---|---|---|---|---|---|---|
| Phs Duration (G+Y+Rc), s | 20.0 | 86.7 | 24.9 | 33.5 | 25.0 | 81.7 | 20.0 | 38.3 |
| Change Period (Y+Rc), s | 5.0 | 5.0 | 5.0 | 5.0 | 5.0 | 5.0 | 5.0 | 5.0 |
| Max Green Setting (Gmax), s | 28.0 | 53.0 | 33.0 | 31.0 | 33.0 | 48.0 | 28.0 | 36.0 |
| Max Q Clear Time (g_c+I1), s | 12.3 | 3.3 | 6.7 | 27.8 | 18.3 | 33.9 | 8.9 | 15.2 |
| Green Ext Time (p_c), s | 0.5 | 14.5 | 0.3 | 0.7 | 0.8 | 5.4 | 0.4 | 1.4 |

**Intersection Summary**

HCM 6th Ctrl Delay 29.1
HCM 6th LOS C

| Lane Group | EBL | EBT | EBR | WBL | WBT | WBR | NBL | NBT | SBL | SBT | SBR |
|---|---|---|---|---|---|---|---|---|---|---|---|
| Lane Configurations | | | | | | | | | | | |
| Traffic Volume (vph) | 129 | 156 | 214 | 92 | 145 | 120 | 275 | 1177 | 186 | 801 | 66 |
| Future Volume (vph) | 129 | 156 | 214 | 92 | 145 | 120 | 275 | 1177 | 186 | 801 | 66 |
| Turn Type | Prot | NA | pm+ov | Prot | NA | Perm | pm+pt | NA | pm+pt | NA | Perm |
| Protected Phases | 7 | 4 | 5 | 3 | 8 | | 5 | 2 | 1 | 6 | |
| Permitted Phases | | | 4 | | | 8 | 2 | | 6 | | 6 |
| Detector Phase | 7 | 4 | 5 | 3 | 8 | 8 | 5 | 2 | 1 | 6 | 6 |
| Switch Phase | | | | | | | | | | | |
| Minimum Initial (s) | 15.0 | 15.0 | 20.0 | 20.0 | 20.0 | 20.0 | 20.0 | 40.0 | 15.0 | 35.0 | 35.0 |
| Minimum Split (s) | 20.0 | 23.0 | 25.0 | 25.0 | 25.0 | 25.0 | 25.0 | 45.0 | 20.0 | 40.0 | 40.0 |
| Total Split (s) | 20.0 | 31.0 | 41.0 | 25.0 | 36.0 | 36.0 | 41.0 | 76.0 | 33.0 | 68.0 | 68.0 |
| Total Split (%) | 12.1% | 18.8% | 24.8% | 15.2% | 21.8% | 21.8% | 24.8% | 46.1% | 20.0% | 41.2% | 41.2% |
| Yellow Time (s) | 4.0 | 4.0 | 4.0 | 4.0 | 4.0 | 4.0 | 4.0 | 4.0 | 4.0 | 4.0 | 4.0 |
| All-Red Time (s) | 1.0 | 1.0 | 1.0 | 1.0 | 1.0 | 1.0 | 1.0 | 1.0 | 1.0 | 1.0 | 1.0 |
| Lost Time Adjust (s) | 0.0 | 0.0 | 0.0 | 0.0 | 0.0 | 0.0 | 0.0 | 0.0 | 0.0 | 0.0 | 0.0 |
| Total Lost Time (s) | 5.0 | 5.0 | 5.0 | 5.0 | 5.0 | 5.0 | 5.0 | 5.0 | 5.0 | 5.0 | 5.0 |
| Lead/Lag | Lead | Lag | Lead | Lead | Lag | Lag | Lead | Lag | Lead | Lag | Lag |
| Lead-Lag Optimize? | | | | | | | | | | | |
| Recall Mode | None | None | None | None | None | None | None | C-Max | None | C-Max | C-Max |

**Intersection Summary**

Cycle Length: 165
Actuated Cycle Length: 165
Offset: 40 (24%), Referenced to phase 2:NBTL and 6:SBTL, Start of Green
Natural Cycle: 115
Control Type: Actuated-Coordinated
Description: Wellness Way (Herrera)

Splits and Phases: 2: Cerrillos Rd. & Herrera Dr./Wellness Way








| Movement | EBL | EBT | EBR | WBL | WBT | WBR | NBL | NBT | NBR | SBL | SBT | SBR |
|---|---|---|---|---|---|---|---|---|---|---|---|---|
| Lane Configurations | | | | | | | | | | | | |
| Traffic Volume (veh/h) | 129 | 156 | 214 | 92 | 145 | 120 | 275 | 1177 | 151 | 186 | 801 | 66 |
| Future Volume (veh/h) | 129 | 156 | 214 | 92 | 145 | 120 | 275 | 1177 | 151 | 186 | 801 | 66 |
| Initial Q (Qb), veh | 0 | 0 | 0 | 0 | 0 | 0 | 0 | 0 | 0 | 0 | 0 | 0 |
| Ped-Bike Adj(A_pbT) | 1.00 | | 1.00 | 1.00 | | 1.00 | 1.00 | | 1.00 | 1.00 | | 1.00 |
| Parking Bus, Adj | 1.00 | 1.00 | 1.00 | 1.00 | 1.00 | 1.00 | 1.00 | 1.00 | 1.00 | 1.00 | 1.00 | 1.00 |
| Work Zone On Approach | | No | | | No | | | No | | | No | |
| Adj Sat Flow, veh/h/ln | 1870 | 1870 | 1870 | 1870 | 1870 | 1870 | 1870 | 1870 | 1870 | 1870 | 1870 | 1870 |
| Adj Flow Rate, veh/h | 152 | 184 | 252 | 108 | 171 | 141 | 324 | 1385 | 178 | 219 | 942 | 78 |
| Peak Hour Factor | 0.85 | 0.85 | 0.85 | 0.85 | 0.85 | 0.85 | 0.85 | 0.85 | 0.85 | 0.85 | 0.85 | 0.85 |
| Percent Heavy Veh, % | 2 | 2 | 2 | 2 | 2 | 2 | 2 | 2 | 2 | 2 | 2 | 2 |
| Cap, veh/h | 314 | 538 | 432 | 416 | 338 | 287 | 426 | 2364 | 304 | 366 | 1726 | 770 |
| Arrive On Green | 0.09 | 0.15 | 0.15 | 0.12 | 0.18 | 0.18 | 0.24 | 1.00 | 1.00 | 0.09 | 0.49 | 0.49 |
| Sat Flow, veh/h | 3456 | 3554 | 1585 | 3456 | 1870 | 1585 | 1781 | 4580 | 588 | 1781 | 3554 | 1585 |
| Grp Volume(v), veh/h | 152 | 184 | 252 | 108 | 171 | 141 | 324 | 1029 | 534 | 219 | 942 | 78 |
| Grp Sat Flow(s),veh/h/ln | 1728 | 1777 | 1585 | 1728 | 1870 | 1585 | 1781 | 1702 | 1764 | 1781 | 1777 | 1585 |
| Q Serve(g_s), s | 6.9 | 7.6 | 22.7 | 4.7 | 13.6 | 13.2 | 15.5 | 0.0 | 0.0 | 9.8 | 30.6 | 4.4 |
| Cycle Q Clear(g_c), s | 6.9 | 7.6 | 22.7 | 4.7 | 13.6 | 13.2 | 15.5 | 0.0 | 0.0 | 9.8 | 30.6 | 4.4 |
| Prop In Lane | 1.00 | | 1.00 | 1.00 | | 1.00 | 1.00 | | 0.33 | 1.00 | | 1.00 |
| Lane Grp Cap(c), veh/h | 314 | 538 | 432 | 416 | 338 | 287 | 426 | 1757 | 911 | 366 | 1726 | 770 |
| V/C Ratio(X) | 0.48 | 0.34 | 0.58 | 0.26 | 0.51 | 0.49 | 0.76 | 0.59 | 0.59 | 0.60 | 0.55 | 0.10 |
| Avail Cap(c_a), veh/h | 314 | 560 | 442 | 419 | 351 | 298 | 598 | 1757 | 911 | 506 | 1726 | 770 |
| HCM Platoon Ratio | 1.00 | 1.00 | 1.00 | 1.00 | 1.00 | 1.00 | 2.00 | 2.00 | 2.00 | 1.00 | 1.00 | 1.00 |
| Upstream Filter(I) | 1.00 | 1.00 | 1.00 | 1.00 | 1.00 | 1.00 | 0.66 | 0.66 | 0.66 | 1.00 | 1.00 | 1.00 |
| Uniform Delay (d), s/veh | 71.3 | 62.7 | 51.9 | 65.9 | 60.9 | 60.7 | 18.5 | 0.0 | 0.0 | 16.9 | 29.7 | 22.9 |
| Incr Delay (d2), s/veh | 1.2 | 0.4 | 1.9 | 0.3 | 1.2 | 1.3 | 2.4 | 1.0 | 1.8 | 1.6 | 1.2 | 0.3 |
| Initial Q Delay(d3),s/veh | 0.0 | 0.0 | 0.0 | 0.0 | 0.0 | 0.0 | 0.0 | 0.0 | 0.0 | 0.0 | 0.0 | 0.0 |
| %ile BackOfQ(95%),veh/ln | 5.6 | 6.3 | 14.4 | 3.8 | 10.9 | 9.3 | 7.8 | 0.4 | 0.8 | 7.4 | 19.1 | 3.2 |
| Unsig. Movement Delay, s/veh | | | | | | | | | | | | |
| LnGrp Delay(d),s/veh | 72.5 | 63.0 | 53.8 | 66.2 | 62.1 | 62.1 | 20.9 | 1.0 | 1.8 | 18.4 | 30.9 | 23.2 |
| LnGrp LOS | E | E | D | E | E | E | C | A | A | B | C | C |
| Approach Vol, veh/h | | 588 | | | 420 | | | 1887 | | | 1239 | |
| Approach Delay, s/veh | | 61.5 | | | 63.1 | | | 4.6 | | | 28.2 | |
| Approach LOS | | E | | | E | | | A | | | C | |

| Timer - Assigned Phs | 1 | 2 | 3 | 4 | 5 | 6 | 7 | 8 |
|---|---|---|---|---|---|---|---|---|
| Phs Duration (G+Y+Rc), s | 20.0 | 90.2 | 24.9 | 30.0 | 25.0 | 85.2 | 20.0 | 34.9 |
| Change Period (Y+Rc), s | 5.0 | 5.0 | 5.0 | 5.0 | 5.0 | 5.0 | 5.0 | 5.0 |
| Max Green Setting (Gmax), s | 28.0 | 71.0 | 20.0 | 26.0 | 36.0 | 63.0 | 15.0 | 31.0 |
| Max Q Clear Time (g_c+I1), s | 11.8 | 2.0 | 6.7 | 24.7 | 17.5 | 32.6 | 8.9 | 15.6 |
| Green Ext Time (p_c), s | 0.5 | 15.2 | 0.2 | 0.3 | 0.9 | 7.2 | 0.2 | 1.2 |

**Intersection Summary**

HCM 6th Ctrl Delay 25.7
HCM 6th LOS C

| Lane Group | EBL | EBT | EBR | WBL | WBT | WBR | NBL | NBT | SBL | SBT | SBR |
|---|---|---|---|---|---|---|---|---|---|---|---|
| Lane Configurations | | | | | | | | | | | |
| Traffic Volume (vph) | 86 | 57 | 190 | 126 | 66 | 70 | 211 | 936 | 27 | 1212 | 54 |
| Future Volume (vph) | 86 | 57 | 190 | 126 | 66 | 70 | 211 | 936 | 27 | 1212 | 54 |
| Turn Type | Prot | NA | Perm | Prot | NA | Perm | pm+pt | NA | pm+pt | NA | Perm |
| Protected Phases | 7 | 4 | | 3 | 8 | | 5 | 2 | 1 | 6 | |
| Permitted Phases | | | 4 | | | 8 | 2 | | 6 | | 6 |
| Detector Phase | 7 | 4 | 4 | 3 | 8 | 8 | 5 | 2 | 1 | 6 | 6 |
| Switch Phase | | | | | | | | | | | |
| Minimum Initial (s) | 15.0 | 15.0 | 15.0 | 20.0 | 20.0 | 20.0 | 20.0 | 40.0 | 15.0 | 35.0 | 35.0 |
| Minimum Split (s) | 20.0 | 23.0 | 23.0 | 25.0 | 25.0 | 25.0 | 25.0 | 45.0 | 20.0 | 40.0 | 40.0 |
| Total Split (s) | 25.0 | 25.0 | 25.0 | 30.0 | 30.0 | 30.0 | 30.0 | 105.0 | 25.0 | 100.0 | 100.0 |
| Total Split (%) | 13.5% | 13.5% | 13.5% | 16.2% | 16.2% | 16.2% | 16.2% | 56.8% | 13.5% | 54.1% | 54.1% |
| Yellow Time (s) | 4.0 | 4.0 | 4.0 | 4.0 | 4.0 | 4.0 | 4.0 | 4.0 | 4.0 | 4.0 | 4.0 |
| All-Red Time (s) | 1.0 | 1.0 | 1.0 | 1.0 | 1.0 | 1.0 | 1.0 | 1.0 | 1.0 | 1.0 | 1.0 |
| Lost Time Adjust (s) | 0.0 | 0.0 | 0.0 | 0.0 | 0.0 | 0.0 | 0.0 | 0.0 | 0.0 | 0.0 | 0.0 |
| Total Lost Time (s) | 5.0 | 5.0 | 5.0 | 5.0 | 5.0 | 5.0 | 5.0 | 5.0 | 5.0 | 5.0 | 5.0 |
| Lead/Lag | Lead | Lag | Lag | Lead | Lag | Lag | Lead | Lag | Lead | Lag | Lag |
| Lead-Lag Optimize? | | | | | | | | | | | |
| Recall Mode | None | None | None | None | None | None | None | C-Max | None | C-Max | C-Max |

**Intersection Summary**

Cycle Length: 185
Actuated Cycle Length: 185
Offset: 60 (32%), Referenced to phase 2:NBTL and 6:SBTL, Start of Green
Natural Cycle: 115
Control Type: Actuated-Coordinated
Description: Wellness Way (Herrera)

Splits and Phases: 2: Cerrillos Rd. & Herrera Dr./Wellness Way








| Movement | EBL | EBT | EBR | WBL | WBT | WBR | NBL | NBT | NBR | SBL | SBT | SBR |
|---|---|---|---|---|---|---|---|---|---|---|---|---|
| Lane Configurations | | | | | | | | | | | | |
| Traffic Volume (veh/h) | 86 | 57 | 190 | 126 | 66 | 70 | 211 | 936 | 54 | 27 | 1212 | 54 |
| Future Volume (veh/h) | 86 | 57 | 190 | 126 | 66 | 70 | 211 | 936 | 54 | 27 | 1212 | 54 |
| Initial Q (Qb), veh | 0 | 0 | 0 | 0 | 0 | 0 | 0 | 0 | 0 | 0 | 0 | 0 |
| Ped-Bike Adj(A_pbT) | 1.00 | | 1.00 | 1.00 | | 1.00 | 1.00 | | 1.00 | 1.00 | | 1.00 |
| Parking Bus, Adj | 1.00 | 1.00 | 1.00 | 1.00 | 1.00 | 1.00 | 1.00 | 1.00 | 1.00 | 1.00 | 1.00 | 1.00 |
| Work Zone On Approach | | No | | | No | | | No | | | No | |
| Adj Sat Flow, veh/h/ln | 1870 | 1870 | 1870 | 1870 | 1870 | 1870 | 1870 | 1870 | 1870 | 1870 | 1870 | 1870 |
| Adj Flow Rate, veh/h | 91 | 60 | 200 | 133 | 69 | 74 | 222 | 985 | 57 | 28 | 1276 | 57 |
| Peak Hour Factor | 0.95 | 0.95 | 0.95 | 0.95 | 0.95 | 0.95 | 0.95 | 0.95 | 0.95 | 0.95 | 0.95 | 0.95 |
| Percent Heavy Veh, % | 2 | 2 | 2 | 2 | 2 | 2 | 2 | 2 | 2 | 2 | 2 | 2 |
| Cap, veh/h | 278 | 384 | 171 | 373 | 254 | 215 | 365 | 3032 | 175 | 456 | 2017 | 900 |
| Arrive On Green | 0.08 | 0.11 | 0.11 | 0.11 | 0.14 | 0.14 | 0.22 | 1.00 | 1.00 | 0.06 | 0.57 | 0.57 |
| Sat Flow, veh/h | 3456 | 3554 | 1585 | 3456 | 1870 | 1585 | 1781 | 4938 | 285 | 1781 | 3554 | 1585 |
| Grp Volume(v), veh/h | 91 | 60 | 200 | 133 | 69 | 74 | 222 | 679 | 363 | 28 | 1276 | 57 |
| Grp Sat Flow(s),veh/h/ln | 1728 | 1777 | 1585 | 1728 | 1870 | 1585 | 1781 | 1702 | 1819 | 1781 | 1777 | 1585 |
| Q Serve(g_s), s | 4.6 | 2.8 | 20.0 | 6.6 | 6.1 | 7.8 | 8.5 | 0.0 | 0.0 | 1.1 | 44.8 | 3.0 |
| Cycle Q Clear(g_c), s | 4.6 | 2.8 | 20.0 | 6.6 | 6.1 | 7.8 | 8.5 | 0.0 | 0.0 | 1.1 | 44.8 | 3.0 |
| Prop In Lane | 1.00 | | 1.00 | 1.00 | | 1.00 | 1.00 | | 0.16 | 1.00 | | 1.00 |
| Lane Grp Cap(c), veh/h | 278 | 384 | 171 | 373 | 254 | 215 | 365 | 2090 | 1117 | 456 | 2017 | 900 |
| V/C Ratio(X) | 0.33 | 0.16 | 1.17 | 0.36 | 0.27 | 0.34 | 0.61 | 0.32 | 0.33 | 0.06 | 0.63 | 0.06 |
| Avail Cap(c_a), veh/h | 374 | 384 | 171 | 467 | 254 | 215 | 413 | 2090 | 1117 | 539 | 2017 | 900 |
| HCM Platoon Ratio | 1.00 | 1.00 | 1.00 | 1.00 | 1.00 | 1.00 | 2.00 | 2.00 | 2.00 | 1.00 | 1.00 | 1.00 |
| Upstream Filter(I) | 1.00 | 1.00 | 1.00 | 1.00 | 1.00 | 1.00 | 0.93 | 0.93 | 0.93 | 1.00 | 1.00 | 1.00 |
| Uniform Delay (d), s/veh | 80.4 | 74.8 | 82.5 | 76.5 | 71.7 | 72.5 | 19.1 | 0.0 | 0.0 | 12.9 | 27.0 | 17.9 |
| Incr Delay (d2), s/veh | 0.7 | 0.2 | 120.9 | 0.6 | 0.6 | 0.9 | 1.9 | 0.4 | 0.7 | 0.1 | 1.5 | 0.1 |
| Initial Q Delay(d3),s/veh | 0.0 | 0.0 | 0.0 | 0.0 | 0.0 | 0.0 | 0.0 | 0.0 | 0.0 | 0.0 | 0.0 | 0.0 |
| %ile BackOfQ(50%),veh/ln | 2.1 | 1.3 | 14.0 | 3.0 | 3.0 | 3.3 | 3.7 | 0.1 | 0.2 | 0.4 | 19.0 | 1.2 |
| Unsig. Movement Delay, s/veh | | | | | | | | | | | | |
| LnGrp Delay(d),s/veh | 81.0 | 75.0 | 203.4 | 77.1 | 72.3 | 73.4 | 21.0 | 0.4 | 0.7 | 13.0 | 28.5 | 18.1 |
| LnGrp LOS | F | E | F | E | E | E | C | A | A | B | C | B |
| Approach Vol, veh/h | | 351 | | | 276 | | | 1264 | | | 1361 | |
| Approach Delay, s/veh | | 149.7 | | | 74.9 | | | 4.1 | | | 27.7 | |
| Approach LOS | | F | | | E | | | A | | | C | |

| Timer - Assigned Phs | 1 | 2 | 3 | 4 | 5 | 6 | 7 | 8 |
|---|---|---|---|---|---|---|---|---|
| Phs Duration (G+Y+Rc), s | 16.4 | 118.6 | 25.0 | 25.0 | 25.0 | 110.0 | 19.9 | 30.1 |
| Change Period (Y+Rc), s | 5.0 | 5.0 | 5.0 | 5.0 | 5.0 | 5.0 | 5.0 | 5.0 |
| Max Green Setting (Gmax), s | 20.0 | 100.0 | 25.0 | 20.0 | 25.0 | 95.0 | 20.0 | 25.0 |
| Max Q Clear Time (g_c+I1), s | 3.1 | 2.0 | 8.6 | 22.0 | 10.5 | 46.8 | 6.6 | 9.8 |
| Green Ext Time (p_c), s | 0.0 | 7.8 | 0.3 | 0.0 | 0.5 | 12.0 | 0.2 | 0.4 |

**Intersection Summary**

| | |
|---|---|
| HCM 6th Ctrl Delay | 35.7 |
| HCM 6th LOS | D |

| Lane Group | EBL | EBT | EBR | WBL | WBT | WBR | NBL | NBT | SBL | SBT | SBR |
|---|---|---|---|---|---|---|---|---|---|---|---|
| Lane Configurations | | | | | | | | | | | |
| Traffic Volume (vph) | 89 | 100 | 214 | 134 | 128 | 144 | 246 | 1036 | 71 | 1277 | 56 |
| Future Volume (vph) | 89 | 100 | 214 | 134 | 128 | 144 | 246 | 1036 | 71 | 1277 | 56 |
| Turn Type | Prot | NA | Perm | Prot | NA | Perm | pm+pt | NA | pm+pt | NA | Perm |
| Protected Phases | 7 | 4 | | 3 | 8 | | 5 | 2 | 1 | 6 | |
| Permitted Phases | | | 4 | | | 8 | 2 | | 6 | | 6 |
| Detector Phase | 7 | 4 | 4 | 3 | 8 | 8 | 5 | 2 | 1 | 6 | 6 |
| Switch Phase | | | | | | | | | | | |
| Minimum Initial (s) | 15.0 | 15.0 | 15.0 | 20.0 | 20.0 | 20.0 | 20.0 | 40.0 | 15.0 | 35.0 | 35.0 |
| Minimum Split (s) | 20.0 | 23.0 | 23.0 | 25.0 | 25.0 | 25.0 | 25.0 | 45.0 | 20.0 | 40.0 | 40.0 |
| Total Split (s) | 25.0 | 25.0 | 25.0 | 30.0 | 30.0 | 30.0 | 30.0 | 105.0 | 25.0 | 100.0 | 100.0 |
| Total Split (%) | 13.5% | 13.5% | 13.5% | 16.2% | 16.2% | 16.2% | 16.2% | 56.8% | 13.5% | 54.1% | 54.1% |
| Yellow Time (s) | 4.0 | 4.0 | 4.0 | 4.0 | 4.0 | 4.0 | 4.0 | 4.0 | 4.0 | 4.0 | 4.0 |
| All-Red Time (s) | 1.0 | 1.0 | 1.0 | 1.0 | 1.0 | 1.0 | 1.0 | 1.0 | 1.0 | 1.0 | 1.0 |
| Lost Time Adjust (s) | 0.0 | 0.0 | 0.0 | 0.0 | 0.0 | 0.0 | 0.0 | 0.0 | 0.0 | 0.0 | 0.0 |
| Total Lost Time (s) | 5.0 | 5.0 | 5.0 | 5.0 | 5.0 | 5.0 | 5.0 | 5.0 | 5.0 | 5.0 | 5.0 |
| Lead/Lag | Lead | Lag | Lag | Lead | Lag | Lag | Lead | Lag | Lead | Lag | Lag |
| Lead-Lag Optimize? | | | | | | | | | | | |
| Recall Mode | None | None | None | None | None | None | None | C-Max | None | C-Max | C-Max |

**Intersection Summary**

Cycle Length: 185
Actuated Cycle Length: 185
Offset: 60 (32%), Referenced to phase 2:NBTL and 6:SBTL, Start of Green
Natural Cycle: 115
Control Type: Actuated-Coordinated
Description: Wellness Way (Herrera)

Splits and Phases: 2: Cerrillos Rd. & Herrera Dr./Wellness Way








| Movement | EBL | EBT | EBR | WBL | WBT | WBR | NBL | NBT | NBR | SBL | SBT | SBR |
|---|---|---|---|---|---|---|---|---|---|---|---|---|
| Lane Configurations | | | | | | | | | | | | |
| Traffic Volume (veh/h) | 89 | 100 | 214 | 134 | 128 | 144 | 246 | 1036 | 110 | 71 | 1277 | 56 |
| Future Volume (veh/h) | 89 | 100 | 214 | 134 | 128 | 144 | 246 | 1036 | 110 | 71 | 1277 | 56 |
| Initial Q (Qb), veh | 0 | 0 | 0 | 0 | 0 | 0 | 0 | 0 | 0 | 0 | 0 | 0 |
| Ped-Bike Adj(A_pbT) | 1.00 | | 1.00 | 1.00 | | 1.00 | 1.00 | | 1.00 | 1.00 | | 1.00 |
| Parking Bus, Adj | 1.00 | 1.00 | 1.00 | 1.00 | 1.00 | 1.00 | 1.00 | 1.00 | 1.00 | 1.00 | 1.00 | 1.00 |
| Work Zone On Approach | | No | | | No | | | No | | | No | |
| Adj Sat Flow, veh/h/ln | 1870 | 1870 | 1870 | 1870 | 1870 | 1870 | 1870 | 1870 | 1870 | 1870 | 1870 | 1870 |
| Adj Flow Rate, veh/h | 94 | 105 | 225 | 141 | 135 | 152 | 259 | 1091 | 116 | 75 | 1344 | 59 |
| Peak Hour Factor | 0.95 | 0.95 | 0.95 | 0.95 | 0.95 | 0.95 | 0.95 | 0.95 | 0.95 | 0.95 | 0.95 | 0.95 |
| Percent Heavy Veh, % | 2 | 2 | 2 | 2 | 2 | 2 | 2 | 2 | 2 | 2 | 2 | 2 |
| Cap, veh/h | 278 | 384 | 171 | 373 | 254 | 215 | 349 | 2795 | 297 | 443 | 2017 | 900 |
| Arrive On Green | 0.08 | 0.11 | 0.11 | 0.11 | 0.14 | 0.14 | 0.22 | 1.00 | 1.00 | 0.08 | 0.57 | 0.57 |
| Sat Flow, veh/h | 3456 | 3554 | 1585 | 3456 | 1870 | 1585 | 1781 | 4687 | 498 | 1781 | 3554 | 1585 |
| Grp Volume(v), veh/h | 94 | 105 | 225 | 141 | 135 | 152 | 259 | 792 | 415 | 75 | 1344 | 59 |
| Grp Sat Flow(s),veh/h/ln | 1728 | 1777 | 1585 | 1728 | 1870 | 1585 | 1781 | 1702 | 1781 | 1781 | 1777 | 1585 |
| Q Serve(g_s), s | 4.8 | 5.0 | 20.0 | 7.0 | 12.4 | 17.0 | 10.4 | 0.0 | 0.0 | 2.9 | 48.6 | 3.1 |
| Cycle Q Clear(g_c), s | 4.8 | 5.0 | 20.0 | 7.0 | 12.4 | 17.0 | 10.4 | 0.0 | 0.0 | 2.9 | 48.6 | 3.1 |
| Prop In Lane | 1.00 | | 1.00 | 1.00 | | 1.00 | 1.00 | | 0.28 | 1.00 | | 1.00 |
| Lane Grp Cap(c), veh/h | 278 | 384 | 171 | 373 | 254 | 215 | 349 | 2030 | 1062 | 443 | 2017 | 900 |
| V/C Ratio(X) | 0.34 | 0.27 | 1.31 | 0.38 | 0.53 | 0.71 | 0.74 | 0.39 | 0.39 | 0.17 | 0.67 | 0.07 |
| Avail Cap(c_a), veh/h | 374 | 384 | 171 | 467 | 254 | 215 | 397 | 2030 | 1062 | 494 | 2017 | 900 |
| HCM Platoon Ratio | 1.00 | 1.00 | 1.00 | 1.00 | 1.00 | 1.00 | 2.00 | 2.00 | 2.00 | 1.00 | 1.00 | 1.00 |
| Upstream Filter(I) | 1.00 | 1.00 | 1.00 | 1.00 | 1.00 | 1.00 | 0.84 | 0.84 | 0.84 | 1.00 | 1.00 | 1.00 |
| Uniform Delay (d), s/veh | 80.4 | 75.8 | 82.5 | 76.7 | 74.5 | 76.4 | 23.9 | 0.0 | 0.0 | 12.0 | 27.8 | 18.0 |
| Incr Delay (d2), s/veh | 0.7 | 0.4 | 176.1 | 0.6 | 2.1 | 10.1 | 5.5 | 0.5 | 0.9 | 0.2 | 1.8 | 0.1 |
| Initial Q Delay(d3),s/veh | 0.0 | 0.0 | 0.0 | 0.0 | 0.0 | 0.0 | 0.0 | 0.0 | 0.0 | 0.0 | 0.0 | 0.0 |
| %ile BackOfQ(95%),veh/ln | 3.9 | 4.2 | 25.8 | 5.7 | 10.3 | 12.1 | 10.2 | 0.2 | 0.5 | 2.1 | 28.1 | 2.2 |
| Unsig. Movement Delay, s/veh | | | | | | | | | | | | |
| LnGrp Delay(d),s/veh | 81.1 | 76.2 | 258.6 | 77.4 | 76.6 | 86.5 | 29.4 | 0.5 | 0.9 | 12.2 | 29.6 | 18.1 |
| LnGrp LOS | F | E | F | E | E | F | C | A | A | B | C | B |
| Approach Vol, veh/h | | 424 | | | 428 | | | 1466 | | | 1478 | |
| Approach Delay, s/veh | | 174.1 | | | 80.4 | | | 5.7 | | | 28.2 | |
| Approach LOS | | F | | | F | | | A | | | C | |

| Timer - Assigned Phs | 1 | 2 | 3 | 4 | 5 | 6 | 7 | 8 |
|---|---|---|---|---|---|---|---|---|
| Phs Duration (G+Y+Rc), s | 19.7 | 115.3 | 25.0 | 25.0 | 25.0 | 110.0 | 19.9 | 30.1 |
| Change Period (Y+Rc), s | 5.0 | 5.0 | 5.0 | 5.0 | 5.0 | 5.0 | 5.0 | 5.0 |
| Max Green Setting (Gmax), s | 20.0 | 100.0 | 25.0 | 20.0 | 25.0 | 95.0 | 20.0 | 25.0 |
| Max Q Clear Time (g_c+I1), s | 4.9 | 2.0 | 9.0 | 22.0 | 12.4 | 50.6 | 6.8 | 19.0 |
| Green Ext Time (p_c), s | 0.1 | 9.8 | 0.4 | 0.0 | 0.6 | 12.9 | 0.2 | 0.6 |

**Intersection Summary**

| | |
|---|---|
| HCM 6th Ctrl Delay | 41.7 |
| HCM 6th LOS | D |

| Lane Group | EBL | EBT | EBR | WBL | WBT | WBR | NBL | NBT | SBL | SBT | SBR |
|---|---|---|---|---|---|---|---|---|---|---|---|
| Lane Configurations | | | | | | | | | | | |
| Traffic Volume (vph) | 89 | 100 | 214 | 134 | 128 | 144 | 246 | 1036 | 71 | 1277 | 56 |
| Future Volume (vph) | 89 | 100 | 214 | 134 | 128 | 144 | 246 | 1036 | 71 | 1277 | 56 |
| Turn Type | Prot | NA | pm+ov | Prot | NA | pm+ov | pm+pt | NA | pm+pt | NA | Perm |
| Protected Phases | 7 | 4 | 5 | 3 | 8 | 1 | 5 | 2 | 1 | 6 | |
| Permitted Phases | | | 4 | | | 8 | 2 | | 6 | | 6 |
| Detector Phase | 7 | 4 | 5 | 3 | 8 | 1 | 5 | 2 | 1 | 6 | 6 |
| Switch Phase | | | | | | | | | | | |
| Minimum Initial (s) | 15.0 | 15.0 | 20.0 | 20.0 | 20.0 | 15.0 | 20.0 | 40.0 | 15.0 | 35.0 | 35.0 |
| Minimum Split (s) | 20.0 | 23.0 | 25.0 | 25.0 | 25.0 | 20.0 | 25.0 | 45.0 | 20.0 | 40.0 | 40.0 |
| Total Split (s) | 25.0 | 25.0 | 30.0 | 30.0 | 30.0 | 25.0 | 30.0 | 105.0 | 25.0 | 100.0 | 100.0 |
| Total Split (%) | 13.5% | 13.5% | 16.2% | 16.2% | 16.2% | 13.5% | 16.2% | 56.8% | 13.5% | 54.1% | 54.1% |
| Yellow Time (s) | 4.0 | 4.0 | 4.0 | 4.0 | 4.0 | 4.0 | 4.0 | 4.0 | 4.0 | 4.0 | 4.0 |
| All-Red Time (s) | 1.0 | 1.0 | 1.0 | 1.0 | 1.0 | 1.0 | 1.0 | 1.0 | 1.0 | 1.0 | 1.0 |
| Lost Time Adjust (s) | 0.0 | 0.0 | 0.0 | 0.0 | 0.0 | 0.0 | 0.0 | 0.0 | 0.0 | 0.0 | 0.0 |
| Total Lost Time (s) | 5.0 | 5.0 | 5.0 | 5.0 | 5.0 | 5.0 | 5.0 | 5.0 | 5.0 | 5.0 | 5.0 |
| Lead/Lag | Lead | Lag | Lead | Lead | Lag | Lead | Lead | Lag | Lead | Lag | Lag |
| Lead-Lag Optimize? | | | | | | | | | | | |
| Recall Mode | None | None | None | None | None | None | None | C-Max | None | C-Max | C-Max |

**Intersection Summary**

Cycle Length: 185
Actuated Cycle Length: 185
Offset: 60 (32%), Referenced to phase 2:NBTL and 6:SBTL, Start of Green
Natural Cycle: 115
Control Type: Actuated-Coordinated
Description: Wellness Way (Herrera)

Splits and Phases: 2: Cerrillos Rd. & Herrera Dr./Wellness Way








| Movement | EBL | EBT | EBR | WBL | WBT | WBR | NBL | NBT | NBR | SBL | SBT | SBR |
|---|---|---|---|---|---|---|---|---|---|---|---|---|
| Lane Configurations | | | | | | | | | | | | |
| Traffic Volume (veh/h) | 89 | 100 | 214 | 134 | 128 | 144 | 246 | 1036 | 110 | 71 | 1277 | 56 |
| Future Volume (veh/h) | 89 | 100 | 214 | 134 | 128 | 144 | 246 | 1036 | 110 | 71 | 1277 | 56 |
| Initial Q (Qb), veh | 0 | 0 | 0 | 0 | 0 | 0 | 0 | 0 | 0 | 0 | 0 | 0 |
| Ped-Bike Adj(A_pbT) | 1.00 | | 1.00 | 1.00 | | 1.00 | 1.00 | | 1.00 | 1.00 | | 1.00 |
| Parking Bus, Adj | 1.00 | 1.00 | 1.00 | 1.00 | 1.00 | 1.00 | 1.00 | 1.00 | 1.00 | 1.00 | 1.00 | 1.00 |
| Work Zone On Approach | | No | | | No | | | No | | | No | |
| Adj Sat Flow, veh/h/ln | 1870 | 1870 | 1870 | 1870 | 1870 | 1870 | 1870 | 1870 | 1870 | 1870 | 1870 | 1870 |
| Adj Flow Rate, veh/h | 94 | 105 | 225 | 141 | 135 | 152 | 259 | 1091 | 116 | 75 | 1344 | 59 |
| Peak Hour Factor | 0.95 | 0.95 | 0.95 | 0.95 | 0.95 | 0.95 | 0.95 | 0.95 | 0.95 | 0.95 | 0.95 | 0.95 |
| Percent Heavy Veh, % | 2 | 2 | 2 | 2 | 2 | 2 | 2 | 2 | 2 | 2 | 2 | 2 |
| Cap, veh/h | 278 | 384 | 343 | 373 | 254 | 341 | 349 | 2795 | 297 | 443 | 2017 | 900 |
| Arrive On Green | 0.08 | 0.11 | 0.11 | 0.11 | 0.14 | 0.14 | 0.22 | 1.00 | 1.00 | 0.08 | 0.57 | 0.57 |
| Sat Flow, veh/h | 3456 | 3554 | 1585 | 3456 | 1870 | 1585 | 1781 | 4687 | 498 | 1781 | 3554 | 1585 |
| Grp Volume(v), veh/h | 94 | 105 | 225 | 141 | 135 | 152 | 259 | 792 | 415 | 75 | 1344 | 59 |
| Grp Sat Flow(s),veh/h/ln | 1728 | 1777 | 1585 | 1728 | 1870 | 1585 | 1781 | 1702 | 1781 | 1781 | 1777 | 1585 |
| Q Serve(g_s), s | 4.8 | 5.0 | 20.0 | 7.0 | 12.4 | 15.4 | 10.4 | 0.0 | 0.0 | 2.9 | 48.6 | 3.1 |
| Cycle Q Clear(g_c), s | 4.8 | 5.0 | 20.0 | 7.0 | 12.4 | 15.4 | 10.4 | 0.0 | 0.0 | 2.9 | 48.6 | 3.1 |
| Prop In Lane | 1.00 | | 1.00 | 1.00 | | 1.00 | 1.00 | | 0.28 | 1.00 | | 1.00 |
| Lane Grp Cap(c), veh/h | 278 | 384 | 343 | 373 | 254 | 341 | 349 | 2030 | 1062 | 443 | 2017 | 900 |
| V/C Ratio(X) | 0.34 | 0.27 | 0.66 | 0.38 | 0.53 | 0.45 | 0.74 | 0.39 | 0.39 | 0.17 | 0.67 | 0.07 |
| Avail Cap(c_a), veh/h | 374 | 384 | 343 | 467 | 254 | 341 | 397 | 2030 | 1062 | 494 | 2017 | 900 |
| HCM Platoon Ratio | 1.00 | 1.00 | 1.00 | 1.00 | 1.00 | 1.00 | 2.00 | 2.00 | 2.00 | 1.00 | 1.00 | 1.00 |
| Upstream Filter(I) | 1.00 | 1.00 | 1.00 | 1.00 | 1.00 | 1.00 | 0.88 | 0.88 | 0.88 | 1.00 | 1.00 | 1.00 |
| Uniform Delay (d), s/veh | 80.4 | 75.8 | 66.2 | 76.7 | 74.5 | 63.0 | 23.9 | 0.0 | 0.0 | 12.0 | 27.8 | 18.0 |
| Incr Delay (d2), s/veh | 0.7 | 0.4 | 4.5 | 0.6 | 2.1 | 0.9 | 5.7 | 0.5 | 1.0 | 0.2 | 1.8 | 0.1 |
| Initial Q Delay(d3),s/veh | 0.0 | 0.0 | 0.0 | 0.0 | 0.0 | 0.0 | 0.0 | 0.0 | 0.0 | 0.0 | 0.0 | 0.0 |
| %ile BackOfQ(95%),veh/ln | 3.9 | 4.2 | 15.5 | 5.7 | 10.3 | 10.5 | 10.3 | 0.3 | 0.5 | 2.1 | 28.1 | 2.2 |
| Unsig. Movement Delay, s/veh | | | | | | | | | | | | |
| LnGrp Delay(d),s/veh | 81.1 | 76.2 | 70.7 | 77.4 | 76.6 | 64.0 | 29.6 | 0.5 | 1.0 | 12.2 | 29.6 | 18.1 |
| LnGrp LOS | F | E | E | E | E | E | C | A | A | B | C | B |
| Approach Vol, veh/h | | 424 | | | 428 | | | 1466 | | | 1478 | |
| Approach Delay, s/veh | | 74.4 | | | 72.4 | | | 5.8 | | | 28.2 | |
| Approach LOS | | E | | | E | | | A | | | C | |

| Timer - Assigned Phs | 1 | 2 | 3 | 4 | 5 | 6 | 7 | 8 |
|---|---|---|---|---|---|---|---|---|
| Phs Duration (G+Y+Rc), s | 19.7 | 115.3 | 25.0 | 25.0 | 25.0 | 110.0 | 19.9 | 30.1 |
| Change Period (Y+Rc), s | 5.0 | 5.0 | 5.0 | 5.0 | 5.0 | 5.0 | 5.0 | 5.0 |
| Max Green Setting (Gmax), s | 20.0 | 100.0 | 25.0 | 20.0 | 25.0 | 95.0 | 20.0 | 25.0 |
| Max Q Clear Time (g_c+I1), s | 4.9 | 2.0 | 9.0 | 22.0 | 12.4 | 50.6 | 6.8 | 17.4 |
| Green Ext Time (p_c), s | 0.1 | 9.8 | 0.4 | 0.0 | 0.6 | 12.9 | 0.2 | 0.7 |

**Intersection Summary**

| | |
|---|---|
| HCM 6th Ctrl Delay | 29.7 |
| HCM 6th LOS | C |

| Lane Group | EBL | EBT | EBR | WBL | WBT | WBR | NBL | NBT | SBL | SBT | SBR |
|---|---|---|---|---|---|---|---|---|---|---|---|
| Lane Configurations | | | | | | | | | | | |
| Traffic Volume (vph) | 106 | 140 | 268 | 159 | 177 | 259 | 288 | 1230 | 175 | 1580 | 67 |
| Future Volume (vph) | 106 | 140 | 268 | 159 | 177 | 259 | 288 | 1230 | 175 | 1580 | 67 |
| Turn Type | Prot | NA | Perm | Prot | NA | Perm | pm+pt | NA | pm+pt | NA | Perm |
| Protected Phases | 7 | 4 | | 3 | 8 | | 5 | 2 | 1 | 6 | |
| Permitted Phases | | | 4 | | | 8 | 2 | | 6 | | 6 |
| Detector Phase | 7 | 4 | 4 | 3 | 8 | 8 | 5 | 2 | 1 | 6 | 6 |
| Switch Phase | | | | | | | | | | | |
| Minimum Initial (s) | 15.0 | 15.0 | 15.0 | 20.0 | 20.0 | 20.0 | 20.0 | 40.0 | 15.0 | 35.0 | 35.0 |
| Minimum Split (s) | 20.0 | 23.0 | 23.0 | 25.0 | 25.0 | 25.0 | 25.0 | 45.0 | 20.0 | 40.0 | 40.0 |
| Total Split (s) | 25.0 | 25.0 | 25.0 | 30.0 | 30.0 | 30.0 | 30.0 | 105.0 | 25.0 | 100.0 | 100.0 |
| Total Split (%) | 13.5% | 13.5% | 13.5% | 16.2% | 16.2% | 16.2% | 16.2% | 56.8% | 13.5% | 54.1% | 54.1% |
| Yellow Time (s) | 4.0 | 4.0 | 4.0 | 4.0 | 4.0 | 4.0 | 4.0 | 4.0 | 4.0 | 4.0 | 4.0 |
| All-Red Time (s) | 1.0 | 1.0 | 1.0 | 1.0 | 1.0 | 1.0 | 1.0 | 1.0 | 1.0 | 1.0 | 1.0 |
| Lost Time Adjust (s) | 0.0 | 0.0 | 0.0 | 0.0 | 0.0 | 0.0 | 0.0 | 0.0 | 0.0 | 0.0 | 0.0 |
| Total Lost Time (s) | 5.0 | 5.0 | 5.0 | 5.0 | 5.0 | 5.0 | 5.0 | 5.0 | 5.0 | 5.0 | 5.0 |
| Lead/Lag | Lead | Lag | Lag | Lead | Lag | Lag | Lead | Lag | Lead | Lag | Lag |
| Lead-Lag Optimize? | | | | | | | | | | | |
| Recall Mode | None | None | None | None | None | None | None | C-Max | None | C-Max | C-Max |

**Intersection Summary**

Cycle Length: 185
Actuated Cycle Length: 185
Offset: 60 (32%), Referenced to phase 2:NBTL and 6:SBTL, Start of Green
Natural Cycle: 125
Control Type: Actuated-Coordinated
Description: Wellness Way (Herrera)

Splits and Phases: 2: Cerrillos Rd. & Herrera Dr./Wellness Way








| Movement | EBL | EBT | EBR | WBL | WBT | WBR | NBL | NBT | NBR | SBL | SBT | SBR |
|---|---|---|---|---|---|---|---|---|---|---|---|---|
| Lane Configurations | | | | | | | | | | | | |
| Traffic Volume (veh/h) | 106 | 140 | 268 | 159 | 177 | 259 | 288 | 1230 | 121 | 175 | 1580 | 67 |
| Future Volume (veh/h) | 106 | 140 | 268 | 159 | 177 | 259 | 288 | 1230 | 121 | 175 | 1580 | 67 |
| Initial Q (Qb), veh | 0 | 0 | 0 | 0 | 0 | 0 | 0 | 0 | 0 | 0 | 0 | 0 |
| Ped-Bike Adj(A_pbT) | 1.00 | | 1.00 | 1.00 | | 1.00 | 1.00 | | 1.00 | 1.00 | | 1.00 |
| Parking Bus, Adj | 1.00 | 1.00 | 1.00 | 1.00 | 1.00 | 1.00 | 1.00 | 1.00 | 1.00 | 1.00 | 1.00 | 1.00 |
| Work Zone On Approach | | No | | | No | | | No | | | No | |
| Adj Sat Flow, veh/h/ln | 1870 | 1870 | 1870 | 1870 | 1870 | 1870 | 1870 | 1870 | 1870 | 1870 | 1870 | 1870 |
| Adj Flow Rate, veh/h | 112 | 147 | 282 | 167 | 186 | 273 | 303 | 1295 | 127 | 184 | 1663 | 71 |
| Peak Hour Factor | 0.95 | 0.95 | 0.95 | 0.95 | 0.95 | 0.95 | 0.95 | 0.95 | 0.95 | 0.95 | 0.95 | 0.95 |
| Percent Heavy Veh, % | 2 | 2 | 2 | 2 | 2 | 2 | 2 | 2 | 2 | 2 | 2 | 2 |
| Cap, veh/h | 279 | 384 | 171 | 374 | 253 | 215 | 316 | 2811 | 276 | 388 | 1926 | 859 |
| Arrive On Green | 0.08 | 0.11 | 0.11 | 0.11 | 0.14 | 0.14 | 0.27 | 1.00 | 1.00 | 0.08 | 0.54 | 0.54 |
| Sat Flow, veh/h | 3456 | 3554 | 1585 | 3456 | 1870 | 1585 | 1781 | 4727 | 464 | 1781 | 3554 | 1585 |
| Grp Volume(v), veh/h | 112 | 147 | 282 | 167 | 186 | 273 | 303 | 932 | 490 | 184 | 1663 | 71 |
| Grp Sat Flow(s),veh/h/ln | 1728 | 1777 | 1585 | 1728 | 1870 | 1585 | 1781 | 1702 | 1787 | 1781 | 1777 | 1585 |
| Q Serve(g_s), s | 5.7 | 7.1 | 20.0 | 8.4 | 17.7 | 25.0 | 22.7 | 0.0 | 0.0 | 8.0 | 74.5 | 4.0 |
| Cycle Q Clear(g_c), s | 5.7 | 7.1 | 20.0 | 8.4 | 17.7 | 25.0 | 22.7 | 0.0 | 0.0 | 8.0 | 74.5 | 4.0 |
| Prop In Lane | 1.00 | | 1.00 | 1.00 | | 1.00 | 1.00 | | 0.26 | 1.00 | | 1.00 |
| Lane Grp Cap(c), veh/h | 279 | 384 | 171 | 374 | 253 | 215 | 316 | 2024 | 1063 | 388 | 1926 | 859 |
| V/C Ratio(X) | 0.40 | 0.38 | 1.65 | 0.45 | 0.73 | 1.27 | 0.96 | 0.46 | 0.46 | 0.47 | 0.86 | 0.08 |
| Avail Cap(c_a), veh/h | 374 | 384 | 171 | 467 | 253 | 215 | 318 | 2024 | 1063 | 436 | 1926 | 859 |
| HCM Platoon Ratio | 1.00 | 1.00 | 1.00 | 1.00 | 1.00 | 1.00 | 2.00 | 2.00 | 2.00 | 1.00 | 1.00 | 1.00 |
| Upstream Filter(I) | 1.00 | 1.00 | 1.00 | 1.00 | 1.00 | 1.00 | 0.74 | 0.74 | 0.74 | 1.00 | 1.00 | 1.00 |
| Uniform Delay (d), s/veh | 80.8 | 76.8 | 82.5 | 77.3 | 76.8 | 80.0 | 47.6 | 0.0 | 0.0 | 14.7 | 36.5 | 20.3 |
| Incr Delay (d2), s/veh | 0.9 | 0.6 | 315.2 | 0.8 | 10.6 | 153.8 | 32.8 | 0.6 | 1.1 | 0.9 | 5.4 | 0.2 |
| Initial Q Delay(d3),s/veh | 0.0 | 0.0 | 0.0 | 0.0 | 0.0 | 0.0 | 0.0 | 0.0 | 0.0 | 0.0 | 0.0 | 0.0 |
| %ile BackOfQ(95%),veh/ln | 4.7 | 6.0 | 36.6 | 6.9 | 14.3 | 29.6 | 20.3 | 0.3 | 0.6 | 6.0 | 42.1 | 2.8 |
| Unsig. Movement Delay, s/veh | | | | | | | | | | | | |
| LnGrp Delay(d),s/veh | 81.7 | 77.4 | 397.7 | 78.2 | 87.3 | 233.8 | 80.4 | 0.6 | 1.1 | 15.6 | 41.9 | 20.5 |
| LnGrp LOS | F | E | F | E | F | F | F | A | A | B | D | C |
| Approach Vol, veh/h | | 541 | | | 626 | | | 1725 | | | 1918 | |
| Approach Delay, s/veh | | 245.3 | | | 148.7 | | | 14.7 | | | 38.6 | |
| Approach LOS | | F | | | F | | | B | | | D | |

| Timer - Assigned Phs | 1 | 2 | 3 | 4 | 5 | 6 | 7 | 8 |
|---|---|---|---|---|---|---|---|---|
| Phs Duration (G+Y+Rc), s | 20.0 | 115.0 | 25.0 | 25.0 | 29.7 | 105.3 | 20.0 | 30.0 |
| Change Period (Y+Rc), s | 5.0 | 5.0 | 5.0 | 5.0 | 5.0 | 5.0 | 5.0 | 5.0 |
| Max Green Setting (Gmax), s | 20.0 | 100.0 | 25.0 | 20.0 | 25.0 | 95.0 | 20.0 | 25.0 |
| Max Q Clear Time (g_c+I1), s | 10.0 | 2.0 | 10.4 | 22.0 | 24.7 | 76.5 | 7.7 | 27.0 |
| Green Ext Time (p_c), s | 0.3 | 12.9 | 0.4 | 0.0 | 0.0 | 11.6 | 0.2 | 0.0 |

**Intersection Summary**

| | |
|---|---|
| HCM 6th Ctrl Delay | 67.6 |
| HCM 6th LOS | E |

| Lane Group | EBL | EBT | EBR | WBL | WBT | WBR | NBL | NBT | SBL | SBT | SBR |
|---|---|---|---|---|---|---|---|---|---|---|---|
| Lane Configurations | | | | | | | | | | | |
| Traffic Volume (vph) | 106 | 140 | 268 | 159 | 177 | 259 | 288 | 1230 | 175 | 1580 | 67 |
| Future Volume (vph) | 106 | 140 | 268 | 159 | 177 | 259 | 288 | 1230 | 175 | 1580 | 67 |
| Turn Type | Prot | NA | pm+ov | Prot | NA | pm+ov | pm+pt | NA | pm+pt | NA | Perm |
| Protected Phases | 7 | 4 | 5 | 3 | 8 | 1 | 5 | 2 | 1 | 6 | |
| Permitted Phases | | | 4 | | | 8 | 2 | | 6 | | 6 |
| Detector Phase | 7 | 4 | 5 | 3 | 8 | 1 | 5 | 2 | 1 | 6 | 6 |
| Switch Phase | | | | | | | | | | | |
| Minimum Initial (s) | 15.0 | 15.0 | 20.0 | 20.0 | 20.0 | 15.0 | 20.0 | 40.0 | 15.0 | 35.0 | 35.0 |
| Minimum Split (s) | 20.0 | 23.0 | 25.0 | 25.0 | 25.0 | 20.0 | 25.0 | 45.0 | 20.0 | 40.0 | 40.0 |
| Total Split (s) | 25.0 | 25.0 | 30.0 | 30.0 | 30.0 | 25.0 | 30.0 | 105.0 | 25.0 | 100.0 | 100.0 |
| Total Split (%) | 13.5% | 13.5% | 16.2% | 16.2% | 16.2% | 13.5% | 16.2% | 56.8% | 13.5% | 54.1% | 54.1% |
| Yellow Time (s) | 4.0 | 4.0 | 4.0 | 4.0 | 4.0 | 4.0 | 4.0 | 4.0 | 4.0 | 4.0 | 4.0 |
| All-Red Time (s) | 1.0 | 1.0 | 1.0 | 1.0 | 1.0 | 1.0 | 1.0 | 1.0 | 1.0 | 1.0 | 1.0 |
| Lost Time Adjust (s) | 0.0 | 0.0 | 0.0 | 0.0 | 0.0 | 0.0 | 0.0 | 0.0 | 0.0 | 0.0 | 0.0 |
| Total Lost Time (s) | 5.0 | 5.0 | 5.0 | 5.0 | 5.0 | 5.0 | 5.0 | 5.0 | 5.0 | 5.0 | 5.0 |
| Lead/Lag | Lead | Lag | Lead | Lead | Lag | Lead | Lead | Lag | Lead | Lag | Lag |
| Lead-Lag Optimize? | | | | | | | | | | | |
| Recall Mode | None | None | None | None | None | None | None | C-Max | None | C-Max | C-Max |

**Intersection Summary**

Cycle Length: 185
Actuated Cycle Length: 185
Offset: 60 (32%), Referenced to phase 2:NBTL and 6:SBTL, Start of Green
Natural Cycle: 125
Control Type: Actuated-Coordinated
Description: Wellness Way (Herrera)

Splits and Phases: 2: Cerrillos Rd. & Herrera Dr./Wellness Way








| Movement | EBL | EBT | EBR | WBL | WBT | WBR | NBL | NBT | NBR | SBL | SBT | SBR |
|---|---|---|---|---|---|---|---|---|---|---|---|---|
| Lane Configurations | | | | | | | | | | | | |
| Traffic Volume (veh/h) | 106 | 140 | 268 | 159 | 177 | 259 | 288 | 1230 | 121 | 175 | 1580 | 67 |
| Future Volume (veh/h) | 106 | 140 | 268 | 159 | 177 | 259 | 288 | 1230 | 121 | 175 | 1580 | 67 |
| Initial Q (Qb), veh | 0 | 0 | 0 | 0 | 0 | 0 | 0 | 0 | 0 | 0 | 0 | 0 |
| Ped-Bike Adj(A_pbT) | 1.00 | | 1.00 | 1.00 | | 1.00 | 1.00 | | 1.00 | 1.00 | | 1.00 |
| Parking Bus, Adj | 1.00 | 1.00 | 1.00 | 1.00 | 1.00 | 1.00 | 1.00 | 1.00 | 1.00 | 1.00 | 1.00 | 1.00 |
| Work Zone On Approach | | No | | | No | | | No | | | No | |
| Adj Sat Flow, veh/h/ln | 1870 | 1870 | 1870 | 1870 | 1870 | 1870 | 1870 | 1870 | 1870 | 1870 | 1870 | 1870 |
| Adj Flow Rate, veh/h | 112 | 147 | 282 | 167 | 186 | 273 | 303 | 1295 | 127 | 184 | 1663 | 71 |
| Peak Hour Factor | 0.95 | 0.95 | 0.95 | 0.95 | 0.95 | 0.95 | 0.95 | 0.95 | 0.95 | 0.95 | 0.95 | 0.95 |
| Percent Heavy Veh, % | 2 | 2 | 2 | 2 | 2 | 2 | 2 | 2 | 2 | 2 | 2 | 2 |
| Cap, veh/h | 279 | 384 | 383 | 374 | 253 | 343 | 316 | 2811 | 276 | 388 | 1926 | 859 |
| Arrive On Green | 0.08 | 0.11 | 0.11 | 0.11 | 0.14 | 0.14 | 0.27 | 1.00 | 1.00 | 0.08 | 0.54 | 0.54 |
| Sat Flow, veh/h | 3456 | 3554 | 1585 | 3456 | 1870 | 1585 | 1781 | 4727 | 464 | 1781 | 3554 | 1585 |
| Grp Volume(v), veh/h | 112 | 147 | 282 | 167 | 186 | 273 | 303 | 932 | 490 | 184 | 1663 | 71 |
| Grp Sat Flow(s),veh/h/ln | 1728 | 1777 | 1585 | 1728 | 1870 | 1585 | 1781 | 1702 | 1787 | 1781 | 1777 | 1585 |
| Q Serve(g_s), s | 5.7 | 7.1 | 20.0 | 8.4 | 17.7 | 25.0 | 22.7 | 0.0 | 0.0 | 8.0 | 74.5 | 4.0 |
| Cycle Q Clear(g_c), s | 5.7 | 7.1 | 20.0 | 8.4 | 17.7 | 25.0 | 22.7 | 0.0 | 0.0 | 8.0 | 74.5 | 4.0 |
| Prop In Lane | 1.00 | | 1.00 | 1.00 | | 1.00 | 1.00 | | 0.26 | 1.00 | | 1.00 |
| Lane Grp Cap(c), veh/h | 279 | 384 | 383 | 374 | 253 | 343 | 316 | 2024 | 1063 | 388 | 1926 | 859 |
| V/C Ratio(X) | 0.40 | 0.38 | 0.74 | 0.45 | 0.73 | 0.80 | 0.96 | 0.46 | 0.46 | 0.47 | 0.86 | 0.08 |
| Avail Cap(c_a), veh/h | 374 | 384 | 383 | 467 | 253 | 343 | 318 | 2024 | 1063 | 436 | 1926 | 859 |
| HCM Platoon Ratio | 1.00 | 1.00 | 1.00 | 1.00 | 1.00 | 1.00 | 2.00 | 2.00 | 2.00 | 1.00 | 1.00 | 1.00 |
| Upstream Filter(I) | 1.00 | 1.00 | 1.00 | 1.00 | 1.00 | 1.00 | 0.78 | 0.78 | 0.78 | 1.00 | 1.00 | 1.00 |
| Uniform Delay (d), s/veh | 80.8 | 76.8 | 64.7 | 77.3 | 76.8 | 68.6 | 47.6 | 0.0 | 0.0 | 14.7 | 36.5 | 20.3 |
| Incr Delay (d2), s/veh | 0.9 | 0.6 | 7.2 | 0.8 | 10.6 | 12.3 | 33.9 | 0.6 | 1.1 | 0.9 | 5.4 | 0.2 |
| Initial Q Delay(d3),s/veh | 0.0 | 0.0 | 0.0 | 0.0 | 0.0 | 0.0 | 0.0 | 0.0 | 0.0 | 0.0 | 0.0 | 0.0 |
| %ile BackOfQ(95%),veh/ln | 4.7 | 6.0 | 19.1 | 6.9 | 14.3 | 19.5 | 20.5 | 0.3 | 0.6 | 6.0 | 42.1 | 2.8 |
| Unsig. Movement Delay, s/veh | | | | | | | | | | | | |
| LnGrp Delay(d),s/veh | 81.7 | 77.4 | 71.9 | 78.2 | 87.3 | 80.9 | 81.5 | 0.6 | 1.1 | 15.6 | 41.9 | 20.5 |
| LnGrp LOS | F | E | E | E | F | F | F | A | A | B | D | C |
| Approach Vol, veh/h | | 541 | | | 626 | | | 1725 | | | 1918 | |
| Approach Delay, s/veh | | 75.4 | | | 82.1 | | | 14.9 | | | 38.6 | |
| Approach LOS | | E | | | F | | | B | | | D | |

| Timer - Assigned Phs | 1 | 2 | 3 | 4 | 5 | 6 | 7 | 8 |
|---|---|---|---|---|---|---|---|---|
| Phs Duration (G+Y+Rc), s | 20.0 | 115.0 | 25.0 | 25.0 | 29.7 | 105.3 | 20.0 | 30.0 |
| Change Period (Y+Rc), s | 5.0 | 5.0 | 5.0 | 5.0 | 5.0 | 5.0 | 5.0 | 5.0 |
| Max Green Setting (Gmax), s | 20.0 | 100.0 | 25.0 | 20.0 | 25.0 | 95.0 | 20.0 | 25.0 |
| Max Q Clear Time (g_c+I1), s | 10.0 | 2.0 | 10.4 | 22.0 | 24.7 | 76.5 | 7.7 | 27.0 |
| Green Ext Time (p_c), s | 0.3 | 12.9 | 0.4 | 0.0 | 0.0 | 11.6 | 0.2 | 0.0 |

**Intersection Summary**

| | |
|---|---|
| HCM 6th Ctrl Delay | 39.9 |
| HCM 6th LOS | D |

| Lane Group | EBL | EBT | EBR | WBL | WBT | NBL | NBT | SBL | SBT | SBR |
|---|---|---|---|---|---|---|---|---|---|---|
| Lane Configurations | | | | | | | | | | |
| Traffic Volume (vph) | 66 | 20 | 63 | 6 | 8 | 51 | 354 | 92 | 334 | 81 |
| Future Volume (vph) | 66 | 20 | 63 | 6 | 8 | 51 | 354 | 92 | 334 | 81 |
| Turn Type | Perm | NA | pm+ov | Perm | NA | pm+pt | NA | pm+pt | NA | Perm |
| Protected Phases | | 4 | 5 | | 8 | 5 | 2 | 1 | 6 | |
| Permitted Phases | 4 | | 4 | 8 | | 2 | | 6 | | 6 |
| Detector Phase | 4 | 4 | 5 | 8 | 8 | 5 | 2 | 1 | 6 | 6 |
| Switch Phase | | | | | | | | | | |
| Minimum Initial (s) | 5.0 | 5.0 | 5.0 | 5.0 | 5.0 | 5.0 | 5.0 | 5.0 | 5.0 | 5.0 |
| Minimum Split (s) | 23.0 | 23.0 | 10.0 | 23.0 | 23.0 | 10.0 | 23.0 | 10.0 | 23.0 | 23.0 |
| Total Split (s) | 23.0 | 23.0 | 10.0 | 23.0 | 23.0 | 10.0 | 27.0 | 10.0 | 27.0 | 27.0 |
| Total Split (%) | 38.3% | 38.3% | 16.7% | 38.3% | 38.3% | 16.7% | 45.0% | 16.7% | 45.0% | 45.0% |
| Yellow Time (s) | 4.0 | 4.0 | 4.0 | 4.0 | 4.0 | 4.0 | 4.0 | 4.0 | 4.0 | 4.0 |
| All-Red Time (s) | 1.0 | 1.0 | 1.0 | 1.0 | 1.0 | 1.0 | 1.0 | 1.0 | 1.0 | 1.0 |
| Lost Time Adjust (s) | 0.0 | 0.0 | 0.0 | 0.0 | 0.0 | 0.0 | 0.0 | 0.0 | 0.0 | 0.0 |
| Total Lost Time (s) | 5.0 | 5.0 | 5.0 | 5.0 | 5.0 | 5.0 | 5.0 | 5.0 | 5.0 | 5.0 |
| Lead/Lag | | | Lead | | | Lead | Lag | Lead | Lag | Lag |
| Lead-Lag Optimize? | | | | | | | | | | |
| Recall Mode | None | None | None | None | None | None | C-Max | None | C-Max | C-Max |

**Intersection Summary**

Cycle Length: 60
Actuated Cycle Length: 60
Offset: 0 (0%), Referenced to phase 2:NBTL and 6:SBTL, Start of Green
Natural Cycle: 60
Control Type: Actuated-Coordinated

Splits and Phases: 3: Richards Ave. & Beckner Rd.








| Movement | EBL | EBT | EBR | WBL | WBT | WBR | NBL | NBT | NBR | SBL | SBT | SBR |
|---|---|---|---|---|---|---|---|---|---|---|---|---|
| Lane Configurations | | | | | | | | | | | | |
| Traffic Volume (veh/h) | 66 | 20 | 63 | 6 | 8 | 97 | 51 | 354 | 22 | 92 | 334 | 81 |
| Future Volume (veh/h) | 66 | 20 | 63 | 6 | 8 | 97 | 51 | 354 | 22 | 92 | 334 | 81 |
| Initial Q (Qb), veh | 0 | 0 | 0 | 0 | 0 | 0 | 0 | 0 | 0 | 0 | 0 | 0 |
| Ped-Bike Adj(A_pbT) | 1.00 | | 1.00 | 1.00 | | 1.00 | 1.00 | | 1.00 | 1.00 | | 1.00 |
| Parking Bus, Adj | 1.00 | 1.00 | 1.00 | 1.00 | 1.00 | 1.00 | 1.00 | 1.00 | 1.00 | 1.00 | 1.00 | 1.00 |
| Work Zone On Approach | | No | | | No | | | No | | | No | |
| Adj Sat Flow, veh/h/ln | 1870 | 1870 | 1870 | 1870 | 1870 | 1870 | 1870 | 1870 | 1870 | 1870 | 1870 | 1870 |
| Adj Flow Rate, veh/h | 97 | 29 | 93 | 9 | 12 | 143 | 75 | 521 | 32 | 135 | 491 | 119 |
| Peak Hour Factor | 0.68 | 0.68 | 0.68 | 0.68 | 0.68 | 0.68 | 0.68 | 0.68 | 0.68 | 0.68 | 0.68 | 0.68 |
| Percent Heavy Veh, % | 2 | 2 | 2 | 2 | 2 | 2 | 2 | 2 | 2 | 2 | 2 | 2 |
| Cap, veh/h | 261 | 374 | 412 | 358 | 25 | 296 | 476 | 829 | 51 | 468 | 917 | 777 |
| Arrive On Green | 0.20 | 0.20 | 0.20 | 0.20 | 0.20 | 0.20 | 0.06 | 0.48 | 0.48 | 0.07 | 0.49 | 0.49 |
| Sat Flow, veh/h | 1232 | 1870 | 1585 | 1269 | 124 | 1480 | 1781 | 1744 | 107 | 1781 | 1870 | 1585 |
| Grp Volume(v), veh/h | 97 | 29 | 93 | 9 | 0 | 155 | 75 | 0 | 553 | 135 | 491 | 119 |
| Grp Sat Flow(s),veh/h/ln | 1232 | 1870 | 1585 | 1269 | 0 | 1604 | 1781 | 0 | 1851 | 1781 | 1870 | 1585 |
| Q Serve(g_s), s | 4.5 | 0.8 | 2.8 | 0.3 | 0.0 | 5.1 | 1.2 | 0.0 | 13.4 | 2.2 | 10.9 | 2.5 |
| Cycle Q Clear(g_c), s | 9.7 | 0.8 | 2.8 | 1.1 | 0.0 | 5.1 | 1.2 | 0.0 | 13.4 | 2.2 | 10.9 | 2.5 |
| Prop In Lane | 1.00 | | 1.00 | 1.00 | | 0.92 | 1.00 | | 0.06 | 1.00 | | 1.00 |
| Lane Grp Cap(c), veh/h | 261 | 374 | 412 | 358 | 0 | 321 | 476 | 0 | 880 | 468 | 917 | 777 |
| V/C Ratio(X) | 0.37 | 0.08 | 0.23 | 0.03 | 0.00 | 0.48 | 0.16 | 0.00 | 0.63 | 0.29 | 0.54 | 0.15 |
| Avail Cap(c_a), veh/h | 384 | 561 | 570 | 485 | 0 | 481 | 519 | 0 | 880 | 484 | 917 | 777 |
| HCM Platoon Ratio | 1.00 | 1.00 | 1.00 | 1.00 | 1.00 | 1.00 | 1.00 | 1.00 | 1.00 | 1.00 | 1.00 | 1.00 |
| Upstream Filter(I) | 1.00 | 1.00 | 1.00 | 1.00 | 0.00 | 1.00 | 1.00 | 0.00 | 1.00 | 1.00 | 1.00 | 1.00 |
| Uniform Delay (d), s/veh | 25.5 | 19.5 | 17.5 | 19.9 | 0.0 | 21.2 | 7.7 | 0.0 | 11.8 | 8.4 | 10.6 | 8.4 |
| Incr Delay (d2), s/veh | 0.9 | 0.1 | 0.3 | 0.0 | 0.0 | 1.1 | 0.2 | 0.0 | 3.4 | 0.3 | 2.2 | 0.4 |
| Initial Q Delay(d3),s/veh | 0.0 | 0.0 | 0.0 | 0.0 | 0.0 | 0.0 | 0.0 | 0.0 | 0.0 | 0.0 | 0.0 | 0.0 |
| %ile BackOfQ(50%),veh/ln | 1.2 | 0.3 | 0.9 | 0.1 | 0.0 | 1.8 | 0.4 | 0.0 | 5.3 | 0.7 | 4.2 | 0.8 |
| Unsig. Movement Delay, s/veh | | | | | | | | | | | | |
| LnGrp Delay(d),s/veh | 26.4 | 19.6 | 17.7 | 20.0 | 0.0 | 22.4 | 7.8 | 0.0 | 15.2 | 8.7 | 12.8 | 8.8 |
| LnGrp LOS | C | B | B | B | A | C | A | A | B | A | B | A |
| Approach Vol, veh/h | | 219 | | | 164 | | | 628 | | | 745 | |
| Approach Delay, s/veh | | 21.8 | | | 22.2 | | | 14.3 | | | 11.4 | |
| Approach LOS | | C | | | C | | | B | | | B | |

| Timer - Assigned Phs | 1 | 2 | | 4 | 5 | 6 | | 8 | | | | |
|---|---|---|---|---|---|---|---|---|---|---|---|---|
| Phs Duration (G+Y+Rc), s | 9.5 | 33.5 | | 17.0 | 8.6 | 34.4 | | 17.0 | | | | |
| Change Period (Y+Rc), s | 5.0 | 5.0 | | 5.0 | 5.0 | 5.0 | | 5.0 | | | | |
| Max Green Setting (Gmax), s | 5.0 | 22.0 | | 18.0 | 5.0 | 22.0 | | 18.0 | | | | |
| Max Q Clear Time (g_c+I1), s | 4.2 | 15.4 | | 11.7 | 3.2 | 12.9 | | 7.1 | | | | |
| Green Ext Time (p_c), s | 0.0 | 1.9 | | 0.4 | 0.0 | 2.3 | | 0.6 | | | | |

| Intersection Summary | | | | | | | | | | | | |
|---|---|---|---|---|---|---|---|---|---|---|---|---|
| HCM 6th Ctrl Delay | | | 14.8 | | | | | | | | | |
| HCM 6th LOS | | | B | | | | | | | | | |

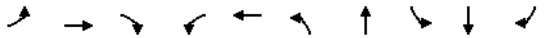

| Lane Group | EBL | EBT | EBR | WBL | WBT | NBL | NBT | SBL | SBT | SBR |
|---|---|---|---|---|---|---|---|---|---|---|
| Lane Configurations | | | | | | | | | | |
| Traffic Volume (vph) | 168 | 32 | 114 | 6 | 22 | 111 | 368 | 95 | 347 | 191 |
| Future Volume (vph) | 168 | 32 | 114 | 6 | 22 | 111 | 368 | 95 | 347 | 191 |
| Turn Type | Perm | NA | pm+ov | Perm | NA | pm+pt | NA | pm+pt | NA | Perm |
| Protected Phases | | 4 | 5 | | 8 | 5 | 2 | 1 | 6 | |
| Permitted Phases | 4 | | 4 | 8 | | 2 | | 6 | | 6 |
| Detector Phase | 4 | 4 | 5 | 8 | 8 | 5 | 2 | 1 | 6 | 6 |
| Switch Phase | | | | | | | | | | |
| Minimum Initial (s) | 5.0 | 5.0 | 5.0 | 5.0 | 5.0 | 5.0 | 5.0 | 5.0 | 5.0 | 5.0 |
| Minimum Split (s) | 23.0 | 23.0 | 10.0 | 23.0 | 23.0 | 10.0 | 23.0 | 10.0 | 23.0 | 23.0 |
| Total Split (s) | 23.0 | 23.0 | 10.0 | 23.0 | 23.0 | 10.0 | 27.0 | 10.0 | 27.0 | 27.0 |
| Total Split (%) | 38.3% | 38.3% | 16.7% | 38.3% | 38.3% | 16.7% | 45.0% | 16.7% | 45.0% | 45.0% |
| Yellow Time (s) | 4.0 | 4.0 | 4.0 | 4.0 | 4.0 | 4.0 | 4.0 | 4.0 | 4.0 | 4.0 |
| All-Red Time (s) | 1.0 | 1.0 | 1.0 | 1.0 | 1.0 | 1.0 | 1.0 | 1.0 | 1.0 | 1.0 |
| Lost Time Adjust (s) | 0.0 | 0.0 | 0.0 | 0.0 | 0.0 | 0.0 | 0.0 | 0.0 | 0.0 | 0.0 |
| Total Lost Time (s) | 5.0 | 5.0 | 5.0 | 5.0 | 5.0 | 5.0 | 5.0 | 5.0 | 5.0 | 5.0 |
| Lead/Lag | | | Lead | | | Lead | Lag | Lead | Lag | Lag |
| Lead-Lag Optimize? | | | | | | | | | | |
| Recall Mode | None | None | None | None | None | None | C-Max | None | C-Max | C-Max |

**Intersection Summary**

Cycle Length: 60
Actuated Cycle Length: 60
Offset: 0 (0%), Referenced to phase 2:NBTL and 6:SBTL, Start of Green
Natural Cycle: 60
Control Type: Actuated-Coordinated

Splits and Phases: 3: Richards Ave. & Beckner Rd.










| Movement | EBL | EBT | EBR | WBL | WBT | WBR | NBL | NBT | NBR | SBL | SBT | SBR |
|---|---|---|---|---|---|---|---|---|---|---|---|---|
| Lane Configurations | | | | | | | | | | | | |
| Traffic Volume (veh/h) | 168 | 32 | 114 | 6 | 22 | 101 | 111 | 368 | 23 | 95 | 347 | 191 |
| Future Volume (veh/h) | 168 | 32 | 114 | 6 | 22 | 101 | 111 | 368 | 23 | 95 | 347 | 191 |
| Initial Q (Qb), veh | 0 | 0 | 0 | 0 | 0 | 0 | 0 | 0 | 0 | 0 | 0 | 0 |
| Ped-Bike Adj(A_pbT) | 1.00 | | 1.00 | 1.00 | | 1.00 | 1.00 | | 1.00 | 1.00 | | 1.00 |
| Parking Bus, Adj | 1.00 | 1.00 | 1.00 | 1.00 | 1.00 | 1.00 | 1.00 | 1.00 | 1.00 | 1.00 | 1.00 | 1.00 |
| Work Zone On Approach | | No | | | No | | | No | | | No | |
| Adj Sat Flow, veh/h/ln | 1870 | 1870 | 1870 | 1870 | 1870 | 1870 | 1870 | 1870 | 1870 | 1870 | 1870 | 1870 |
| Adj Flow Rate, veh/h | 247 | 47 | 168 | 9 | 32 | 149 | 163 | 541 | 34 | 140 | 510 | 281 |
| Peak Hour Factor | 0.68 | 0.68 | 0.68 | 0.68 | 0.68 | 0.68 | 0.68 | 0.68 | 0.68 | 0.68 | 0.68 | 0.68 |
| Percent Heavy Veh, % | 2 | 2 | 2 | 2 | 2 | 2 | 2 | 2 | 2 | 2 | 2 | 2 |
| Cap, veh/h | 376 | 561 | 607 | 449 | 86 | 402 | 357 | 653 | 41 | 332 | 687 | 582 |
| Arrive On Green | 0.30 | 0.30 | 0.30 | 0.30 | 0.30 | 0.30 | 0.08 | 0.37 | 0.37 | 0.08 | 0.37 | 0.37 |
| Sat Flow, veh/h | 1203 | 1870 | 1585 | 1166 | 288 | 1341 | 1781 | 1741 | 109 | 1781 | 1870 | 1585 |
| Grp Volume(v), veh/h | 247 | 47 | 168 | 9 | 0 | 181 | 163 | 0 | 575 | 140 | 510 | 281 |
| Grp Sat Flow(s),veh/h/ln | 1203 | 1870 | 1585 | 1166 | 0 | 1629 | 1781 | 0 | 1851 | 1781 | 1870 | 1585 |
| Q Serve(g_s), s | 12.2 | 1.1 | 4.4 | 0.3 | 0.0 | 5.3 | 3.3 | 0.0 | 16.9 | 2.9 | 14.2 | 8.2 |
| Cycle Q Clear(g_c), s | 17.5 | 1.1 | 4.4 | 1.4 | 0.0 | 5.3 | 3.3 | 0.0 | 16.9 | 2.9 | 14.2 | 8.2 |
| Prop In Lane | 1.00 | | 1.00 | 1.00 | | 0.82 | 1.00 | | 0.06 | 1.00 | | 1.00 |
| Lane Grp Cap(c), veh/h | 376 | 561 | 607 | 449 | 0 | 489 | 357 | 0 | 694 | 332 | 687 | 582 |
| V/C Ratio(X) | 0.66 | 0.08 | 0.28 | 0.02 | 0.00 | 0.37 | 0.46 | 0.00 | 0.83 | 0.42 | 0.74 | 0.48 |
| Avail Cap(c_a), veh/h | 376 | 561 | 607 | 449 | 0 | 489 | 357 | 0 | 694 | 346 | 687 | 582 |
| HCM Platoon Ratio | 1.00 | 1.00 | 1.00 | 1.00 | 1.00 | 1.00 | 1.00 | 1.00 | 1.00 | 1.00 | 1.00 | 1.00 |
| Upstream Filter(I) | 1.00 | 1.00 | 1.00 | 1.00 | 0.00 | 1.00 | 1.00 | 0.00 | 1.00 | 1.00 | 1.00 | 1.00 |
| Uniform Delay (d), s/veh | 23.4 | 15.1 | 12.8 | 15.6 | 0.0 | 16.5 | 12.2 | 0.0 | 17.0 | 12.8 | 16.5 | 14.6 |
| Incr Delay (d2), s/veh | 4.1 | 0.1 | 0.2 | 0.0 | 0.0 | 0.5 | 0.9 | 0.0 | 11.0 | 0.9 | 7.1 | 2.9 |
| Initial Q Delay(d3),s/veh | 0.0 | 0.0 | 0.0 | 0.0 | 0.0 | 0.0 | 0.0 | 0.0 | 0.0 | 0.0 | 0.0 | 0.0 |
| %ile BackOfQ(95%),veh/ln | 6.1 | 0.7 | 2.3 | 0.1 | 0.0 | 3.1 | 2.1 | 0.0 | 12.9 | 1.8 | 10.8 | 5.4 |
| Unsig. Movement Delay, s/veh | | | | | | | | | | | | |
| LnGrp Delay(d),s/veh | 27.6 | 15.1 | 13.0 | 15.6 | 0.0 | 17.0 | 13.1 | 0.0 | 28.0 | 13.7 | 23.6 | 17.5 |
| LnGrp LOS | C | B | B | B | A | B | B | A | C | B | C | B |
| Approach Vol, veh/h | | 462 | | | 190 | | | 738 | | | 931 | |
| Approach Delay, s/veh | | 21.0 | | | 16.9 | | | 24.7 | | | 20.3 | |
| Approach LOS | | C | | | B | | | C | | | C | |

| Timer - Assigned Phs | 1 | 2 | | 4 | 5 | 6 | | 8 | | | | |
|---|---|---|---|---|---|---|---|---|---|---|---|---|
| Phs Duration (G+Y+Rc), s | 9.5 | 27.5 | | 23.0 | 10.0 | 27.0 | | 23.0 | | | | |
| Change Period (Y+Rc), s | 5.0 | 5.0 | | 5.0 | 5.0 | 5.0 | | 5.0 | | | | |
| Max Green Setting (Gmax), s | 5.0 | 22.0 | | 18.0 | 5.0 | 22.0 | | 18.0 | | | | |
| Max Q Clear Time (g_c+I1), s | 4.9 | 18.9 | | 19.5 | 5.3 | 16.2 | | 7.3 | | | | |
| Green Ext Time (p_c), s | 0.0 | 1.1 | | 0.0 | 0.0 | 2.1 | | 0.7 | | | | |

| Intersection Summary | | |
|---|---|---|
| HCM 6th Ctrl Delay | 21.6 | |
| HCM 6th LOS | C | |

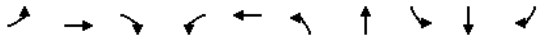

| Lane Group | EBL | EBT | EBR | WBL | WBT | NBL | NBT | SBL | SBT | SBR |
|---|---|---|---|---|---|---|---|---|---|---|
| Lane Configurations | | | | | | | | | | |
| Traffic Volume (vph) | 168 | 32 | 114 | 6 | 22 | 111 | 368 | 95 | 347 | 191 |
| Future Volume (vph) | 168 | 32 | 114 | 6 | 22 | 111 | 368 | 95 | 347 | 191 |
| Turn Type | Perm | NA | pm+ov | Perm | NA | pm+pt | NA | pm+pt | NA | Perm |
| Protected Phases | | 4 | 5 | | 8 | 5 | 2 | 1 | 6 | |
| Permitted Phases | 4 | | 4 | 8 | | 2 | | 6 | | 6 |
| Detector Phase | 4 | 4 | 5 | 8 | 8 | 5 | 2 | 1 | 6 | 6 |
| Switch Phase | | | | | | | | | | |
| Minimum Initial (s) | 5.0 | 5.0 | 5.0 | 5.0 | 5.0 | 5.0 | 5.0 | 5.0 | 5.0 | 5.0 |
| Minimum Split (s) | 23.0 | 23.0 | 10.0 | 23.0 | 23.0 | 10.0 | 23.0 | 10.0 | 23.0 | 23.0 |
| Total Split (s) | 23.0 | 23.0 | 10.0 | 23.0 | 23.0 | 10.0 | 27.0 | 10.0 | 27.0 | 27.0 |
| Total Split (%) | 38.3% | 38.3% | 16.7% | 38.3% | 38.3% | 16.7% | 45.0% | 16.7% | 45.0% | 45.0% |
| Yellow Time (s) | 4.0 | 4.0 | 4.0 | 4.0 | 4.0 | 4.0 | 4.0 | 4.0 | 4.0 | 4.0 |
| All-Red Time (s) | 1.0 | 1.0 | 1.0 | 1.0 | 1.0 | 1.0 | 1.0 | 1.0 | 1.0 | 1.0 |
| Lost Time Adjust (s) | 0.0 | 0.0 | 0.0 | 0.0 | 0.0 | 0.0 | 0.0 | 0.0 | 0.0 | 0.0 |
| Total Lost Time (s) | 5.0 | 5.0 | 5.0 | 5.0 | 5.0 | 5.0 | 5.0 | 5.0 | 5.0 | 5.0 |
| Lead/Lag | | | Lead | | | Lead | Lag | Lead | Lag | Lag |
| Lead-Lag Optimize? | | | | | | | | | | |
| Recall Mode | None | None | None | None | None | None | C-Max | None | C-Max | C-Max |

**Intersection Summary**

Cycle Length: 60
Actuated Cycle Length: 60
Offset: 0 (0%), Referenced to phase 2:NBTL and 6:SBTL, Start of Green
Natural Cycle: 60
Control Type: Actuated-Coordinated

Splits and Phases: 3: Richards Ave. & Beckner Rd.










| Movement | EBL | EBT | EBR | WBL | WBT | WBR | NBL | NBT | NBR | SBL | SBT | SBR |
|---|---|---|---|---|---|---|---|---|---|---|---|---|
| Lane Configurations | | | | | | | | | | | | |
| Traffic Volume (veh/h) | 168 | 32 | 114 | 6 | 22 | 101 | 111 | 368 | 23 | 95 | 347 | 191 |
| Future Volume (veh/h) | 168 | 32 | 114 | 6 | 22 | 101 | 111 | 368 | 23 | 95 | 347 | 191 |
| Initial Q (Qb), veh | 0 | 0 | 0 | 0 | 0 | 0 | 0 | 0 | 0 | 0 | 0 | 0 |
| Ped-Bike Adj(A_pbT) | 1.00 | | 1.00 | 1.00 | | 1.00 | 1.00 | | 1.00 | 1.00 | | 1.00 |
| Parking Bus, Adj | 1.00 | 1.00 | 1.00 | 1.00 | 1.00 | 1.00 | 1.00 | 1.00 | 1.00 | 1.00 | 1.00 | 1.00 |
| Work Zone On Approach | | No | | | No | | | No | | | No | |
| Adj Sat Flow, veh/h/ln | 1870 | 1870 | 1870 | 1870 | 1870 | 1870 | 1870 | 1870 | 1870 | 1870 | 1870 | 1870 |
| Adj Flow Rate, veh/h | 247 | 47 | 168 | 9 | 32 | 149 | 163 | 541 | 34 | 140 | 510 | 281 |
| Peak Hour Factor | 0.68 | 0.68 | 0.68 | 0.68 | 0.68 | 0.68 | 0.68 | 0.68 | 0.68 | 0.68 | 0.68 | 0.68 |
| Percent Heavy Veh, % | 2 | 2 | 2 | 2 | 2 | 2 | 2 | 2 | 2 | 2 | 2 | 2 |
| Cap, veh/h | 376 | 561 | 607 | 449 | 86 | 402 | 357 | 653 | 41 | 332 | 687 | 582 |
| Arrive On Green | 0.30 | 0.30 | 0.30 | 0.30 | 0.30 | 0.30 | 0.08 | 0.37 | 0.37 | 0.08 | 0.37 | 0.37 |
| Sat Flow, veh/h | 1203 | 1870 | 1585 | 1166 | 288 | 1341 | 1781 | 1741 | 109 | 1781 | 1870 | 1585 |
| Grp Volume(v), veh/h | 247 | 47 | 168 | 9 | 0 | 181 | 163 | 0 | 575 | 140 | 510 | 281 |
| Grp Sat Flow(s),veh/h/ln | 1203 | 1870 | 1585 | 1166 | 0 | 1629 | 1781 | 0 | 1851 | 1781 | 1870 | 1585 |
| Q Serve(g_s), s | 12.2 | 1.1 | 4.4 | 0.3 | 0.0 | 5.3 | 3.3 | 0.0 | 16.9 | 2.9 | 14.2 | 8.2 |
| Cycle Q Clear(g_c), s | 17.5 | 1.1 | 4.4 | 1.4 | 0.0 | 5.3 | 3.3 | 0.0 | 16.9 | 2.9 | 14.2 | 8.2 |
| Prop In Lane | 1.00 | | 1.00 | 1.00 | | 0.82 | 1.00 | | 0.06 | 1.00 | | 1.00 |
| Lane Grp Cap(c), veh/h | 376 | 561 | 607 | 449 | 0 | 489 | 357 | 0 | 694 | 332 | 687 | 582 |
| V/C Ratio(X) | 0.66 | 0.08 | 0.28 | 0.02 | 0.00 | 0.37 | 0.46 | 0.00 | 0.83 | 0.42 | 0.74 | 0.48 |
| Avail Cap(c_a), veh/h | 376 | 561 | 607 | 449 | 0 | 489 | 357 | 0 | 694 | 346 | 687 | 582 |
| HCM Platoon Ratio | 1.00 | 1.00 | 1.00 | 1.00 | 1.00 | 1.00 | 1.00 | 1.00 | 1.00 | 1.00 | 1.00 | 1.00 |
| Upstream Filter(I) | 1.00 | 1.00 | 1.00 | 1.00 | 0.00 | 1.00 | 1.00 | 0.00 | 1.00 | 1.00 | 1.00 | 1.00 |
| Uniform Delay (d), s/veh | 23.4 | 15.1 | 12.8 | 15.6 | 0.0 | 16.5 | 12.2 | 0.0 | 17.0 | 12.8 | 16.5 | 14.6 |
| Incr Delay (d2), s/veh | 4.1 | 0.1 | 0.2 | 0.0 | 0.0 | 0.5 | 0.9 | 0.0 | 11.0 | 0.9 | 7.1 | 2.9 |
| Initial Q Delay(d3),s/veh | 0.0 | 0.0 | 0.0 | 0.0 | 0.0 | 0.0 | 0.0 | 0.0 | 0.0 | 0.0 | 0.0 | 0.0 |
| %ile BackOfQ(95%),veh/ln | 6.1 | 0.7 | 2.3 | 0.1 | 0.0 | 3.1 | 2.1 | 0.0 | 12.9 | 1.8 | 10.8 | 5.4 |
| Unsig. Movement Delay, s/veh | | | | | | | | | | | | |
| LnGrp Delay(d),s/veh | 27.6 | 15.1 | 13.0 | 15.6 | 0.0 | 17.0 | 13.1 | 0.0 | 28.0 | 13.7 | 23.6 | 17.5 |
| LnGrp LOS | C | B | B | B | A | B | B | A | C | B | C | B |
| Approach Vol, veh/h | | 462 | | | 190 | | | 738 | | | 931 | |
| Approach Delay, s/veh | | 21.0 | | | 16.9 | | | 24.7 | | | 20.3 | |
| Approach LOS | | C | | | B | | | C | | | C | |

| Timer - Assigned Phs | 1 | 2 | | 4 | 5 | 6 | | 8 | | | | |
|---|---|---|---|---|---|---|---|---|---|---|---|---|
| Phs Duration (G+Y+Rc), s | 9.5 | 27.5 | | 23.0 | 10.0 | 27.0 | | 23.0 | | | | |
| Change Period (Y+Rc), s | 5.0 | 5.0 | | 5.0 | 5.0 | 5.0 | | 5.0 | | | | |
| Max Green Setting (Gmax), s | 5.0 | 22.0 | | 18.0 | 5.0 | 22.0 | | 18.0 | | | | |
| Max Q Clear Time (g_c+I1), s | 4.9 | 18.9 | | 19.5 | 5.3 | 16.2 | | 7.3 | | | | |
| Green Ext Time (p_c), s | 0.0 | 1.1 | | 0.0 | 0.0 | 2.1 | | 0.7 | | | | |

| Intersection Summary | | |
|---|---|---|
| HCM 6th Ctrl Delay | 21.6 | |
| HCM 6th LOS | C | |

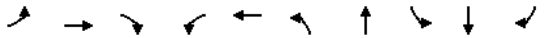

| Lane Group | EBL | EBT | EBR | WBL | WBT | NBL | NBT | SBL | SBT | SBR |
|---|---|---|---|---|---|---|---|---|---|---|
| Lane Configurations | | | | | | | | | | |
| Traffic Volume (vph) | 204 | 34 | 129 | 6 | 25 | 128 | 368 | 95 | 347 | 227 |
| Future Volume (vph) | 204 | 34 | 129 | 6 | 25 | 128 | 368 | 95 | 347 | 227 |
| Turn Type | Perm | NA | pm+ov | Perm | NA | pm+pt | NA | pm+pt | NA | Perm |
| Protected Phases | | 4 | 5 | | 8 | 5 | 2 | 1 | 6 | |
| Permitted Phases | 4 | | 4 | 8 | | 2 | | 6 | | 6 |
| Detector Phase | 4 | 4 | 5 | 8 | 8 | 5 | 2 | 1 | 6 | 6 |
| Switch Phase | | | | | | | | | | |
| Minimum Initial (s) | 5.0 | 5.0 | 5.0 | 5.0 | 5.0 | 5.0 | 5.0 | 5.0 | 5.0 | 5.0 |
| Minimum Split (s) | 23.0 | 23.0 | 10.0 | 23.0 | 23.0 | 10.0 | 23.0 | 10.0 | 23.0 | 23.0 |
| Total Split (s) | 23.0 | 23.0 | 10.0 | 23.0 | 23.0 | 10.0 | 27.0 | 10.0 | 27.0 | 27.0 |
| Total Split (%) | 38.3% | 38.3% | 16.7% | 38.3% | 38.3% | 16.7% | 45.0% | 16.7% | 45.0% | 45.0% |
| Yellow Time (s) | 4.0 | 4.0 | 4.0 | 4.0 | 4.0 | 4.0 | 4.0 | 4.0 | 4.0 | 4.0 |
| All-Red Time (s) | 1.0 | 1.0 | 1.0 | 1.0 | 1.0 | 1.0 | 1.0 | 1.0 | 1.0 | 1.0 |
| Lost Time Adjust (s) | 0.0 | 0.0 | 0.0 | 0.0 | 0.0 | 0.0 | 0.0 | 0.0 | 0.0 | 0.0 |
| Total Lost Time (s) | 5.0 | 5.0 | 5.0 | 5.0 | 5.0 | 5.0 | 5.0 | 5.0 | 5.0 | 5.0 |
| Lead/Lag | | | Lead | | | Lead | Lag | Lead | Lag | Lag |
| Lead-Lag Optimize? | | | | | | | | | | |
| Recall Mode | None | None | None | None | None | None | C-Max | None | C-Max | C-Max |

**Intersection Summary**

Cycle Length: 60
Actuated Cycle Length: 60
Offset: 0 (0%), Referenced to phase 2:NBTL and 6:SBTL, Start of Green
Natural Cycle: 60
Control Type: Actuated-Coordinated

Splits and Phases: 3: Richards Ave. & Beckner Rd.










| Movement | EBL | EBT | EBR | WBL | WBT | WBR | NBL | NBT | NBR | SBL | SBT | SBR |
|---|---|---|---|---|---|---|---|---|---|---|---|---|
| Lane Configurations | | | | | | | | | | | | |
| Traffic Volume (veh/h) | 204 | 34 | 129 | 6 | 25 | 101 | 128 | 368 | 23 | 95 | 347 | 227 |
| Future Volume (veh/h) | 204 | 34 | 129 | 6 | 25 | 101 | 128 | 368 | 23 | 95 | 347 | 227 |
| Initial Q (Qb), veh | 0 | 0 | 0 | 0 | 0 | 0 | 0 | 0 | 0 | 0 | 0 | 0 |
| Ped-Bike Adj(A_pbT) | 1.00 | | 1.00 | 1.00 | | 1.00 | 1.00 | | 1.00 | 1.00 | | 1.00 |
| Parking Bus, Adj | 1.00 | 1.00 | 1.00 | 1.00 | 1.00 | 1.00 | 1.00 | 1.00 | 1.00 | 1.00 | 1.00 | 1.00 |
| Work Zone On Approach | | No | | | No | | | No | | | No | |
| Adj Sat Flow, veh/h/ln | 1870 | 1870 | 1870 | 1870 | 1870 | 1870 | 1870 | 1870 | 1870 | 1870 | 1870 | 1870 |
| Adj Flow Rate, veh/h | 300 | 50 | 190 | 9 | 37 | 149 | 188 | 541 | 34 | 140 | 510 | 334 |
| Peak Hour Factor | 0.68 | 0.68 | 0.68 | 0.68 | 0.68 | 0.68 | 0.68 | 0.68 | 0.68 | 0.68 | 0.68 | 0.68 |
| Percent Heavy Veh, % | 2 | 2 | 2 | 2 | 2 | 2 | 2 | 2 | 2 | 2 | 2 | 2 |
| Cap, veh/h | 372 | 561 | 608 | 440 | 98 | 393 | 353 | 653 | 41 | 332 | 686 | 581 |
| Arrive On Green | 0.30 | 0.30 | 0.30 | 0.30 | 0.30 | 0.30 | 0.08 | 0.37 | 0.37 | 0.08 | 0.37 | 0.37 |
| Sat Flow, veh/h | 1198 | 1870 | 1585 | 1140 | 325 | 1309 | 1781 | 1741 | 109 | 1781 | 1870 | 1585 |
| Grp Volume(v), veh/h | 300 | 50 | 190 | 9 | 0 | 186 | 188 | 0 | 575 | 140 | 510 | 334 |
| Grp Sat Flow(s),veh/h/ln | 1198 | 1870 | 1585 | 1140 | 0 | 1635 | 1781 | 0 | 1851 | 1781 | 1870 | 1585 |
| Q Serve(g_s), s | 12.6 | 1.2 | 5.0 | 0.3 | 0.0 | 5.4 | 3.9 | 0.0 | 16.9 | 2.9 | 14.2 | 10.1 |
| Cycle Q Clear(g_c), s | 18.0 | 1.2 | 5.0 | 1.5 | 0.0 | 5.4 | 3.9 | 0.0 | 16.9 | 2.9 | 14.2 | 10.1 |
| Prop In Lane | 1.00 | | 1.00 | 1.00 | | 0.80 | 1.00 | | 0.06 | 1.00 | | 1.00 |
| Lane Grp Cap(c), veh/h | 372 | 561 | 608 | 440 | 0 | 490 | 353 | 0 | 694 | 332 | 686 | 581 |
| V/C Ratio(X) | 0.81 | 0.09 | 0.31 | 0.02 | 0.00 | 0.38 | 0.53 | 0.00 | 0.83 | 0.42 | 0.74 | 0.57 |
| Avail Cap(c_a), veh/h | 372 | 561 | 608 | 440 | 0 | 490 | 353 | 0 | 694 | 346 | 686 | 581 |
| HCM Platoon Ratio | 1.00 | 1.00 | 1.00 | 1.00 | 1.00 | 1.00 | 1.00 | 1.00 | 1.00 | 1.00 | 1.00 | 1.00 |
| Upstream Filter(I) | 1.00 | 1.00 | 1.00 | 1.00 | 0.00 | 1.00 | 1.00 | 0.00 | 1.00 | 1.00 | 1.00 | 1.00 |
| Uniform Delay (d), s/veh | 24.7 | 15.1 | 13.0 | 15.6 | 0.0 | 16.6 | 12.5 | 0.0 | 17.0 | 12.8 | 16.5 | 15.2 |
| Incr Delay (d2), s/veh | 12.4 | 0.1 | 0.3 | 0.0 | 0.0 | 0.5 | 1.5 | 0.0 | 11.0 | 0.9 | 7.2 | 4.1 |
| Initial Q Delay(d3),s/veh | 0.0 | 0.0 | 0.0 | 0.0 | 0.0 | 0.0 | 0.0 | 0.0 | 0.0 | 0.0 | 0.0 | 0.0 |
| %ile BackOfQ(95%),veh/ln | 8.8 | 0.8 | 2.7 | 0.1 | 0.0 | 3.2 | 2.5 | 0.0 | 12.9 | 1.8 | 10.8 | 6.9 |
| Unsig. Movement Delay, s/veh | | | | | | | | | | | | |
| LnGrp Delay(d),s/veh | 37.1 | 15.2 | 13.3 | 15.7 | 0.0 | 17.1 | 14.1 | 0.0 | 28.0 | 13.7 | 23.7 | 19.3 |
| LnGrp LOS | D | B | B | B | A | B | B | A | C | B | C | B |
| Approach Vol, veh/h | | 540 | | | 195 | | | 763 | | | 984 | |
| Approach Delay, s/veh | | 26.7 | | | 17.0 | | | 24.6 | | | 20.8 | |
| Approach LOS | | C | | | B | | | C | | | C | |

| Timer - Assigned Phs | 1 | 2 | | 4 | 5 | 6 | | 8 | | | | |
|---|---|---|---|---|---|---|---|---|---|---|---|---|
| Phs Duration (G+Y+Rc), s | 9.5 | 27.5 | | 23.0 | 10.0 | 27.0 | | 23.0 | | | | |
| Change Period (Y+Rc), s | 5.0 | 5.0 | | 5.0 | 5.0 | 5.0 | | 5.0 | | | | |
| Max Green Setting (Gmax), s | 5.0 | 22.0 | | 18.0 | 5.0 | 22.0 | | 18.0 | | | | |
| Max Q Clear Time (g_c+I1), s | 4.9 | 18.9 | | 20.0 | 5.9 | 16.2 | | 7.4 | | | | |
| Green Ext Time (p_c), s | 0.0 | 1.1 | | 0.0 | 0.0 | 2.2 | | 0.7 | | | | |

| Intersection Summary | | | |
|---|---|---|---|
| HCM 6th Ctrl Delay | | 22.9 | |
| HCM 6th LOS | | C | |

| Lane Group | EBL | EBT | EBR | WBL | WBT | NBL | NBT | SBL | SBT | SBR |
|---|---|---|---|---|---|---|---|---|---|---|
| Lane Configurations | | | | | | | | | | |
| Traffic Volume (vph) | 204 | 34 | 129 | 6 | 25 | 128 | 368 | 95 | 347 | 227 |
| Future Volume (vph) | 204 | 34 | 129 | 6 | 25 | 128 | 368 | 95 | 347 | 227 |
| Turn Type | Perm | NA | pm+ov | Perm | NA | pm+pt | NA | pm+pt | NA | Perm |
| Protected Phases | | 4 | 5 | | 8 | 5 | 2 | 1 | 6 | |
| Permitted Phases | 4 | | 4 | 8 | | 2 | | 6 | | 6 |
| Detector Phase | 4 | 4 | 5 | 8 | 8 | 5 | 2 | 1 | 6 | 6 |
| Switch Phase | | | | | | | | | | |
| Minimum Initial (s) | 5.0 | 5.0 | 5.0 | 5.0 | 5.0 | 5.0 | 5.0 | 5.0 | 5.0 | 5.0 |
| Minimum Split (s) | 23.0 | 23.0 | 10.0 | 23.0 | 23.0 | 10.0 | 23.0 | 10.0 | 23.0 | 23.0 |
| Total Split (s) | 23.0 | 23.0 | 10.0 | 23.0 | 23.0 | 10.0 | 27.0 | 10.0 | 27.0 | 27.0 |
| Total Split (%) | 38.3% | 38.3% | 16.7% | 38.3% | 38.3% | 16.7% | 45.0% | 16.7% | 45.0% | 45.0% |
| Yellow Time (s) | 4.0 | 4.0 | 4.0 | 4.0 | 4.0 | 4.0 | 4.0 | 4.0 | 4.0 | 4.0 |
| All-Red Time (s) | 1.0 | 1.0 | 1.0 | 1.0 | 1.0 | 1.0 | 1.0 | 1.0 | 1.0 | 1.0 |
| Lost Time Adjust (s) | 0.0 | 0.0 | 0.0 | 0.0 | 0.0 | 0.0 | 0.0 | 0.0 | 0.0 | 0.0 |
| Total Lost Time (s) | 5.0 | 5.0 | 5.0 | 5.0 | 5.0 | 5.0 | 5.0 | 5.0 | 5.0 | 5.0 |
| Lead/Lag | | | Lead | | | Lead | Lag | Lead | Lag | Lag |
| Lead-Lag Optimize? | | | | | | | | | | |
| Recall Mode | None | None | None | None | None | None | C-Max | None | C-Max | C-Max |

**Intersection Summary**

Cycle Length: 60
Actuated Cycle Length: 60
Offset: 0 (0%), Referenced to phase 2:NBTL and 6:SBTL, Start of Green
Natural Cycle: 60
Control Type: Actuated-Coordinated

Splits and Phases: 3: Richards Ave. & Beckner Rd.








| Movement | EBL | EBT | EBR | WBL | WBT | WBR | NBL | NBT | NBR | SBL | SBT | SBR |
|---|---|---|---|---|---|---|---|---|---|---|---|---|
| Lane Configurations | | | | | | | | | | | | |
| Traffic Volume (veh/h) | 204 | 34 | 129 | 6 | 25 | 101 | 128 | 368 | 23 | 95 | 347 | 227 |
| Future Volume (veh/h) | 204 | 34 | 129 | 6 | 25 | 101 | 128 | 368 | 23 | 95 | 347 | 227 |
| Initial Q (Qb), veh | 0 | 0 | 0 | 0 | 0 | 0 | 0 | 0 | 0 | 0 | 0 | 0 |
| Ped-Bike Adj(A_pbT) | 1.00 | | 1.00 | 1.00 | | 1.00 | 1.00 | | 1.00 | 1.00 | | 1.00 |
| Parking Bus, Adj | 1.00 | 1.00 | 1.00 | 1.00 | 1.00 | 1.00 | 1.00 | 1.00 | 1.00 | 1.00 | 1.00 | 1.00 |
| Work Zone On Approach | | No | | | No | | | No | | | No | |
| Adj Sat Flow, veh/h/ln | 1870 | 1870 | 1870 | 1870 | 1870 | 1870 | 1870 | 1870 | 1870 | 1870 | 1870 | 1870 |
| Adj Flow Rate, veh/h | 300 | 50 | 190 | 9 | 37 | 149 | 188 | 541 | 34 | 140 | 510 | 334 |
| Peak Hour Factor | 0.68 | 0.68 | 0.68 | 0.68 | 0.68 | 0.68 | 0.68 | 0.68 | 0.68 | 0.68 | 0.68 | 0.68 |
| Percent Heavy Veh, % | 2 | 2 | 2 | 2 | 2 | 2 | 2 | 2 | 2 | 2 | 2 | 2 |
| Cap, veh/h | 372 | 561 | 608 | 440 | 98 | 393 | 353 | 653 | 41 | 332 | 686 | 581 |
| Arrive On Green | 0.30 | 0.30 | 0.30 | 0.30 | 0.30 | 0.30 | 0.08 | 0.37 | 0.37 | 0.08 | 0.37 | 0.37 |
| Sat Flow, veh/h | 1198 | 1870 | 1585 | 1140 | 325 | 1309 | 1781 | 1741 | 109 | 1781 | 1870 | 1585 |
| Grp Volume(v), veh/h | 300 | 50 | 190 | 9 | 0 | 186 | 188 | 0 | 575 | 140 | 510 | 334 |
| Grp Sat Flow(s),veh/h/ln | 1198 | 1870 | 1585 | 1140 | 0 | 1635 | 1781 | 0 | 1851 | 1781 | 1870 | 1585 |
| Q Serve(g_s), s | 12.6 | 1.2 | 5.0 | 0.3 | 0.0 | 5.4 | 3.9 | 0.0 | 16.9 | 2.9 | 14.2 | 10.1 |
| Cycle Q Clear(g_c), s | 18.0 | 1.2 | 5.0 | 1.5 | 0.0 | 5.4 | 3.9 | 0.0 | 16.9 | 2.9 | 14.2 | 10.1 |
| Prop In Lane | 1.00 | | 1.00 | 1.00 | | 0.80 | 1.00 | | 0.06 | 1.00 | | 1.00 |
| Lane Grp Cap(c), veh/h | 372 | 561 | 608 | 440 | 0 | 490 | 353 | 0 | 694 | 332 | 686 | 581 |
| V/C Ratio(X) | 0.81 | 0.09 | 0.31 | 0.02 | 0.00 | 0.38 | 0.53 | 0.00 | 0.83 | 0.42 | 0.74 | 0.57 |
| Avail Cap(c_a), veh/h | 372 | 561 | 608 | 440 | 0 | 490 | 353 | 0 | 694 | 346 | 686 | 581 |
| HCM Platoon Ratio | 1.00 | 1.00 | 1.00 | 1.00 | 1.00 | 1.00 | 1.00 | 1.00 | 1.00 | 1.00 | 1.00 | 1.00 |
| Upstream Filter(I) | 1.00 | 1.00 | 1.00 | 1.00 | 0.00 | 1.00 | 1.00 | 0.00 | 1.00 | 1.00 | 1.00 | 1.00 |
| Uniform Delay (d), s/veh | 24.7 | 15.1 | 13.0 | 15.6 | 0.0 | 16.6 | 12.5 | 0.0 | 17.0 | 12.8 | 16.5 | 15.2 |
| Incr Delay (d2), s/veh | 12.4 | 0.1 | 0.3 | 0.0 | 0.0 | 0.5 | 1.5 | 0.0 | 11.0 | 0.9 | 7.2 | 4.1 |
| Initial Q Delay(d3),s/veh | 0.0 | 0.0 | 0.0 | 0.0 | 0.0 | 0.0 | 0.0 | 0.0 | 0.0 | 0.0 | 0.0 | 0.0 |
| %ile BackOfQ(95%),veh/ln | 8.8 | 0.8 | 2.7 | 0.1 | 0.0 | 3.2 | 2.5 | 0.0 | 12.9 | 1.8 | 10.8 | 6.9 |
| Unsig. Movement Delay, s/veh | | | | | | | | | | | | |
| LnGrp Delay(d),s/veh | 37.1 | 15.2 | 13.3 | 15.7 | 0.0 | 17.1 | 14.1 | 0.0 | 28.0 | 13.7 | 23.7 | 19.3 |
| LnGrp LOS | D | B | B | B | A | B | B | A | C | B | C | B |
| Approach Vol, veh/h | | 540 | | | 195 | | | 763 | | | 984 | |
| Approach Delay, s/veh | | 26.7 | | | 17.0 | | | 24.6 | | | 20.8 | |
| Approach LOS | | C | | | B | | | C | | | C | |

| Timer - Assigned Phs | 1 | 2 | | 4 | 5 | 6 | | 8 | | | | |
|---|---|---|---|---|---|---|---|---|---|---|---|---|
| Phs Duration (G+Y+Rc), s | 9.5 | 27.5 | | 23.0 | 10.0 | 27.0 | | 23.0 | | | | |
| Change Period (Y+Rc), s | 5.0 | 5.0 | | 5.0 | 5.0 | 5.0 | | 5.0 | | | | |
| Max Green Setting (Gmax), s | 5.0 | 22.0 | | 18.0 | 5.0 | 22.0 | | 18.0 | | | | |
| Max Q Clear Time (g_c+I1), s | 4.9 | 18.9 | | 20.0 | 5.9 | 16.2 | | 7.4 | | | | |
| Green Ext Time (p_c), s | 0.0 | 1.1 | | 0.0 | 0.0 | 2.2 | | 0.7 | | | | |

| Intersection Summary | | | |
|---|---|---|---|
| HCM 6th Ctrl Delay | | 22.9 | |
| HCM 6th LOS | | C | |

| Lane Group | EBL | EBT | EBR | WBL | WBT | NBL | NBT | SBL | SBT | SBR |
|---|---|---|---|---|---|---|---|---|---|---|
| Lane Configurations | | | | | | | | | | |
| Traffic Volume (vph) | 75 | 3 | 62 | 1 | 2 | 41 | 324 | 9 | 357 | 96 |
| Future Volume (vph) | 75 | 3 | 62 | 1 | 2 | 41 | 324 | 9 | 357 | 96 |
| Turn Type | Perm | NA | pm+ov | Perm | NA | pm+pt | NA | pm+pt | NA | Perm |
| Protected Phases | | 4 | 5 | | 8 | 5 | 2 | 1 | 6 | |
| Permitted Phases | 4 | | 4 | 8 | | 2 | | 6 | | 6 |
| Detector Phase | 4 | 4 | 5 | 8 | 8 | 5 | 2 | 1 | 6 | 6 |
| Switch Phase | | | | | | | | | | |
| Minimum Initial (s) | 5.0 | 5.0 | 5.0 | 5.0 | 5.0 | 5.0 | 5.0 | 5.0 | 5.0 | 5.0 |
| Minimum Split (s) | 23.0 | 23.0 | 10.0 | 23.0 | 23.0 | 10.0 | 23.0 | 10.0 | 23.0 | 23.0 |
| Total Split (s) | 23.0 | 23.0 | 10.0 | 23.0 | 23.0 | 10.0 | 27.0 | 10.0 | 27.0 | 27.0 |
| Total Split (%) | 38.3% | 38.3% | 16.7% | 38.3% | 38.3% | 16.7% | 45.0% | 16.7% | 45.0% | 45.0% |
| Yellow Time (s) | 4.0 | 4.0 | 4.0 | 4.0 | 4.0 | 4.0 | 4.0 | 4.0 | 4.0 | 4.0 |
| All-Red Time (s) | 1.0 | 1.0 | 1.0 | 1.0 | 1.0 | 1.0 | 1.0 | 1.0 | 1.0 | 1.0 |
| Lost Time Adjust (s) | 0.0 | 0.0 | 0.0 | 0.0 | 0.0 | 0.0 | 0.0 | 0.0 | 0.0 | 0.0 |
| Total Lost Time (s) | 5.0 | 5.0 | 5.0 | 5.0 | 5.0 | 5.0 | 5.0 | 5.0 | 5.0 | 5.0 |
| Lead/Lag | | | Lead | | | Lead | Lag | Lead | Lag | Lag |
| Lead-Lag Optimize? | | | | | | | | | | |
| Recall Mode | None | None | None | None | None | None | C-Max | None | C-Max | C-Max |

**Intersection Summary**

Cycle Length: 60
Actuated Cycle Length: 60
Offset: 0 (0%), Referenced to phase 2:NBTL and 6:SBTL, Start of Green
Natural Cycle: 60
Control Type: Actuated-Coordinated
Description: Beckner Rd.

Splits and Phases: 3: Richards Ave. & Beckner Rd.

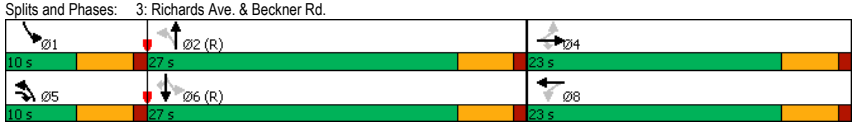






| Movement | EBL | EBT | EBR | WBL | WBT | WBR | NBL | NBT | NBR | SBL | SBT | SBR |
|---|---|---|---|---|---|---|---|---|---|---|---|---|
| Lane Configurations | | | | | | | | | | | | |
| Traffic Volume (veh/h) | 75 | 3 | 62 | 1 | 2 | 4 | 41 | 324 | 1 | 9 | 357 | 96 |
| Future Volume (veh/h) | 75 | 3 | 62 | 1 | 2 | 4 | 41 | 324 | 1 | 9 | 357 | 96 |
| Initial Q (Qb), veh | 0 | 0 | 0 | 0 | 0 | 0 | 0 | 0 | 0 | 0 | 0 | 0 |
| Ped-Bike Adj(A_pbT) | 1.00 | | 1.00 | 1.00 | | 1.00 | 1.00 | | 1.00 | 1.00 | | 1.00 |
| Parking Bus, Adj | 1.00 | 1.00 | 1.00 | 1.00 | 1.00 | 1.00 | 1.00 | 1.00 | 1.00 | 1.00 | 1.00 | 1.00 |
| Work Zone On Approach | | No | | | No | | | No | | | No | |
| Adj Sat Flow, veh/h/ln | 1870 | 1870 | 1870 | 1870 | 1870 | 1870 | 1870 | 1870 | 1870 | 1870 | 1870 | 1870 |
| Adj Flow Rate, veh/h | 78 | 3 | 65 | 1 | 2 | 4 | 43 | 338 | 1 | 9 | 372 | 100 |
| Peak Hour Factor | 0.96 | 0.96 | 0.96 | 0.96 | 0.96 | 0.96 | 0.96 | 0.96 | 0.96 | 0.96 | 0.96 | 0.96 |
| Percent Heavy Veh, % | 2 | 2 | 2 | 2 | 2 | 2 | 2 | 2 | 2 | 2 | 2 | 2 |
| Cap, veh/h | 239 | 164 | 206 | 235 | 49 | 97 | 680 | 1213 | 4 | 738 | 1159 | 982 |
| Arrive On Green | 0.09 | 0.09 | 0.09 | 0.09 | 0.09 | 0.09 | 0.04 | 0.65 | 0.65 | 0.01 | 0.62 | 0.62 |
| Sat Flow, veh/h | 1410 | 1870 | 1585 | 1333 | 557 | 1113 | 1781 | 1864 | 6 | 1781 | 1870 | 1585 |
| Grp Volume(v), veh/h | 78 | 3 | 65 | 1 | 0 | 6 | 43 | 0 | 339 | 9 | 372 | 100 |
| Grp Sat Flow(s),veh/h/ln | 1410 | 1870 | 1585 | 1333 | 0 | 1670 | 1781 | 0 | 1869 | 1781 | 1870 | 1585 |
| Q Serve(g_s), s | 3.2 | 0.1 | 2.2 | 0.0 | 0.0 | 0.2 | 0.5 | 0.0 | 4.6 | 0.1 | 5.7 | 1.5 |
| Cycle Q Clear(g_c), s | 3.4 | 0.1 | 2.2 | 0.1 | 0.0 | 0.2 | 0.5 | 0.0 | 4.6 | 0.1 | 5.7 | 1.5 |
| Prop In Lane | 1.00 | | 1.00 | 1.00 | | 0.67 | 1.00 | | 0.00 | 1.00 | | 1.00 |
| Lane Grp Cap(c), veh/h | 239 | 164 | 206 | 235 | 0 | 146 | 680 | 0 | 1217 | 738 | 1159 | 982 |
| V/C Ratio(X) | 0.33 | 0.02 | 0.32 | 0.00 | 0.00 | 0.04 | 0.06 | 0.00 | 0.28 | 0.01 | 0.32 | 0.10 |
| Avail Cap(c_a), veh/h | 538 | 561 | 543 | 518 | 0 | 501 | 753 | 0 | 1217 | 866 | 1159 | 982 |
| HCM Platoon Ratio | 1.00 | 1.00 | 1.00 | 1.00 | 1.00 | 1.00 | 1.00 | 1.00 | 1.00 | 1.00 | 1.00 | 1.00 |
| Upstream Filter(I) | 1.00 | 1.00 | 1.00 | 1.00 | 0.00 | 1.00 | 1.00 | 0.00 | 1.00 | 1.00 | 1.00 | 1.00 |
| Uniform Delay (d), s/veh | 26.6 | 25.0 | 23.7 | 25.1 | 0.0 | 25.1 | 3.8 | 0.0 | 4.5 | 4.2 | 5.4 | 4.6 |
| Incr Delay (d2), s/veh | 0.8 | 0.0 | 0.9 | 0.0 | 0.0 | 0.1 | 0.0 | 0.0 | 0.6 | 0.0 | 0.7 | 0.2 |
| Initial Q Delay(d3),s/veh | 0.0 | 0.0 | 0.0 | 0.0 | 0.0 | 0.0 | 0.0 | 0.0 | 0.0 | 0.0 | 0.0 | 0.0 |
| %ile BackOfQ(50%),veh/ln | 1.0 | 0.0 | 0.8 | 0.0 | 0.0 | 0.1 | 0.1 | 0.0 | 1.3 | 0.0 | 1.7 | 0.4 |
| Unsig. Movement Delay, s/veh | | | | | | | | | | | | |
| LnGrp Delay(d),s/veh | 27.4 | 25.1 | 24.5 | 25.1 | 0.0 | 25.2 | 3.8 | 0.0 | 5.0 | 4.2 | 6.1 | 4.8 |
| LnGrp LOS | C | C | C | C | A | C | A | A | A | A | A | A |
| Approach Vol, veh/h | | 146 | | | 7 | | | 382 | | | 481 | |
| Approach Delay, s/veh | | 26.1 | | | 25.2 | | | 4.9 | | | 5.8 | |
| Approach LOS | | C | | | C | | | A | | | A | |

| Timer - Assigned Phs | 1 | 2 | | 4 | 5 | 6 | | 8 | | | | |
|---|---|---|---|---|---|---|---|---|---|---|---|---|
| Phs Duration (G+Y+Rc), s | 5.7 | 44.1 | | 10.3 | 7.6 | 42.2 | | 10.3 | | | | |
| Change Period (Y+Rc), s | 5.0 | 5.0 | | 5.0 | 5.0 | 5.0 | | 5.0 | | | | |
| Max Green Setting (Gmax), s | 5.0 | 22.0 | | 18.0 | 5.0 | 22.0 | | 18.0 | | | | |
| Max Q Clear Time (g_c+I1), s | 2.1 | 6.6 | | 5.4 | 2.5 | 7.7 | | 2.2 | | | | |
| Green Ext Time (p_c), s | 0.0 | 1.7 | | 0.3 | 0.0 | 2.1 | | 0.0 | | | | |

**Intersection Summary**

| | |
|---|---|
| HCM 6th Ctrl Delay | 8.5 |
| HCM 6th LOS | A |

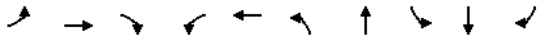

| Lane Group | EBL | EBT | EBR | WBL | WBT | NBL | NBT | SBL | SBT | SBR |
|---|---|---|---|---|---|---|---|---|---|---|
| Lane Configurations | | | | | | | | | | |
| Traffic Volume (vph) | 178 | 9 | 107 | 1 | 9 | 125 | 337 | 10 | 371 | 277 |
| Future Volume (vph) | 178 | 9 | 107 | 1 | 9 | 125 | 337 | 10 | 371 | 277 |
| Turn Type | Perm | NA | pm+ov | Perm | NA | pm+pt | NA | pm+pt | NA | Perm |
| Protected Phases | | 4 | 5 | | 8 | 5 | 2 | 1 | 6 | |
| Permitted Phases | 4 | | 4 | 8 | | 2 | | 6 | | 6 |
| Detector Phase | 4 | 4 | 5 | 8 | 8 | 5 | 2 | 1 | 6 | 6 |
| Switch Phase | | | | | | | | | | |
| Minimum Initial (s) | 5.0 | 5.0 | 5.0 | 5.0 | 5.0 | 5.0 | 5.0 | 5.0 | 5.0 | 5.0 |
| Minimum Split (s) | 23.0 | 23.0 | 10.0 | 23.0 | 23.0 | 10.0 | 23.0 | 10.0 | 23.0 | 23.0 |
| Total Split (s) | 23.0 | 23.0 | 10.0 | 23.0 | 23.0 | 10.0 | 27.0 | 10.0 | 27.0 | 27.0 |
| Total Split (%) | 38.3% | 38.3% | 16.7% | 38.3% | 38.3% | 16.7% | 45.0% | 16.7% | 45.0% | 45.0% |
| Yellow Time (s) | 4.0 | 4.0 | 4.0 | 4.0 | 4.0 | 4.0 | 4.0 | 4.0 | 4.0 | 4.0 |
| All-Red Time (s) | 1.0 | 1.0 | 1.0 | 1.0 | 1.0 | 1.0 | 1.0 | 1.0 | 1.0 | 1.0 |
| Lost Time Adjust (s) | 0.0 | 0.0 | 0.0 | 0.0 | 0.0 | 0.0 | 0.0 | 0.0 | 0.0 | 0.0 |
| Total Lost Time (s) | 5.0 | 5.0 | 5.0 | 5.0 | 5.0 | 5.0 | 5.0 | 5.0 | 5.0 | 5.0 |
| Lead/Lag | | | Lead | | | Lead | Lag | Lead | Lag | Lag |
| Lead-Lag Optimize? | | | | | | | | | | |
| Recall Mode | None | None | None | None | None | None | C-Max | None | C-Max | C-Max |

**Intersection Summary**

Cycle Length: 60
Actuated Cycle Length: 60
Offset: 0 (0%), Referenced to phase 2:NBTL and 6:SBTL, Start of Green
Natural Cycle: 60
Control Type: Actuated-Coordinated
Description: Beckner Rd.

Splits and Phases: 3: Richards Ave. & Beckner Rd.

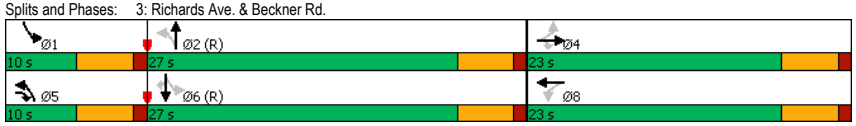








| Movement | EBL | EBT | EBR | WBL | WBT | WBR | NBL | NBT | NBR | SBL | SBT | SBR |
|---|---|---|---|---|---|---|---|---|---|---|---|---|
| Lane Configurations | | | | | | | | | | | | |
| Traffic Volume (veh/h) | 178 | 9 | 107 | 1 | 9 | 4 | 125 | 337 | 1 | 10 | 371 | 277 |
| Future Volume (veh/h) | 178 | 9 | 107 | 1 | 9 | 4 | 125 | 337 | 1 | 10 | 371 | 277 |
| Initial Q (Qb), veh | 0 | 0 | 0 | 0 | 0 | 0 | 0 | 0 | 0 | 0 | 0 | 0 |
| Ped-Bike Adj(A_pbT) | 1.00 | | 1.00 | 1.00 | | 1.00 | 1.00 | | 1.00 | 1.00 | | 1.00 |
| Parking Bus, Adj | 1.00 | 1.00 | 1.00 | 1.00 | 1.00 | 1.00 | 1.00 | 1.00 | 1.00 | 1.00 | 1.00 | 1.00 |
| Work Zone On Approach | | No | | | No | | | No | | | No | |
| Adj Sat Flow, veh/h/ln | 1870 | 1870 | 1870 | 1870 | 1870 | 1870 | 1870 | 1870 | 1870 | 1870 | 1870 | 1870 |
| Adj Flow Rate, veh/h | 185 | 9 | 111 | 1 | 9 | 4 | 130 | 351 | 1 | 10 | 386 | 289 |
| Peak Hour Factor | 0.96 | 0.96 | 0.96 | 0.96 | 0.96 | 0.96 | 0.96 | 0.96 | 0.96 | 0.96 | 0.96 | 0.96 |
| Percent Heavy Veh, % | 2 | 2 | 2 | 2 | 2 | 2 | 2 | 2 | 2 | 2 | 2 | 2 |
| Cap, veh/h | 356 | 326 | 394 | 337 | 214 | 95 | 536 | 1049 | 3 | 617 | 938 | 795 |
| Arrive On Green | 0.17 | 0.17 | 0.17 | 0.17 | 0.17 | 0.17 | 0.07 | 0.56 | 0.56 | 0.01 | 0.50 | 0.50 |
| Sat Flow, veh/h | 1401 | 1870 | 1585 | 1272 | 1227 | 545 | 1781 | 1864 | 5 | 1781 | 1870 | 1585 |
| Grp Volume(v), veh/h | 185 | 9 | 111 | 1 | 0 | 13 | 130 | 0 | 352 | 10 | 386 | 289 |
| Grp Sat Flow(s),veh/h/ln | 1401 | 1870 | 1585 | 1272 | 0 | 1772 | 1781 | 0 | 1869 | 1781 | 1870 | 1585 |
| Q Serve(g_s), s | 7.6 | 0.2 | 3.4 | 0.0 | 0.0 | 0.4 | 2.0 | 0.0 | 6.1 | 0.2 | 7.8 | 6.7 |
| Cycle Q Clear(g_c), s | 8.0 | 0.2 | 3.4 | 0.3 | 0.0 | 0.4 | 2.0 | 0.0 | 6.1 | 0.2 | 7.8 | 6.7 |
| Prop In Lane | 1.00 | | 1.00 | 1.00 | | 0.31 | 1.00 | | 0.00 | 1.00 | | 1.00 |
| Lane Grp Cap(c), veh/h | 356 | 326 | 394 | 337 | 0 | 309 | 536 | 0 | 1052 | 617 | 938 | 795 |
| V/C Ratio(X) | 0.52 | 0.03 | 0.28 | 0.00 | 0.00 | 0.04 | 0.24 | 0.00 | 0.33 | 0.02 | 0.41 | 0.36 |
| Avail Cap(c_a), veh/h | 532 | 561 | 592 | 496 | 0 | 532 | 553 | 0 | 1052 | 743 | 938 | 795 |
| HCM Platoon Ratio | 1.00 | 1.00 | 1.00 | 1.00 | 1.00 | 1.00 | 1.00 | 1.00 | 1.00 | 1.00 | 1.00 | 1.00 |
| Upstream Filter(I) | 1.00 | 1.00 | 1.00 | 1.00 | 0.00 | 1.00 | 1.00 | 0.00 | 1.00 | 1.00 | 1.00 | 1.00 |
| Uniform Delay (d), s/veh | 23.9 | 20.5 | 18.2 | 20.7 | 0.0 | 20.6 | 6.2 | 0.0 | 7.1 | 7.2 | 9.4 | 9.1 |
| Incr Delay (d2), s/veh | 1.2 | 0.0 | 0.4 | 0.0 | 0.0 | 0.1 | 0.2 | 0.0 | 0.9 | 0.0 | 1.3 | 1.3 |
| Initial Q Delay(d3),s/veh | 0.0 | 0.0 | 0.0 | 0.0 | 0.0 | 0.0 | 0.0 | 0.0 | 0.0 | 0.0 | 0.0 | 0.0 |
| %ile BackOfQ(95%),veh/ln | 4.1 | 0.2 | 2.0 | 0.0 | 0.0 | 0.2 | 1.0 | 0.0 | 3.7 | 0.1 | 5.2 | 3.8 |
| Unsig. Movement Delay, s/veh | | | | | | | | | | | | |
| LnGrp Delay(d),s/veh | 25.1 | 20.6 | 18.6 | 20.7 | 0.0 | 20.6 | 6.5 | 0.0 | 7.9 | 7.2 | 10.7 | 10.4 |
| LnGrp LOS | C | C | B | C | A | C | A | A | A | A | B | B |
| Approach Vol, veh/h | | 305 | | | 14 | | | 482 | | | 685 | |
| Approach Delay, s/veh | | 22.6 | | | 20.6 | | | 7.5 | | | 10.5 | |
| Approach LOS | | C | | | C | | | A | | | B | |

| Timer - Assigned Phs | 1 | 2 | | 4 | 5 | 6 | | 8 | | | | |
|---|---|---|---|---|---|---|---|---|---|---|---|---|
| Phs Duration (G+Y+Rc), s | 5.8 | 38.8 | | 15.5 | 9.4 | 35.1 | | 15.5 | | | | |
| Change Period (Y+Rc), s | 5.0 | 5.0 | | 5.0 | 5.0 | 5.0 | | 5.0 | | | | |
| Max Green Setting (Gmax), s | 5.0 | 22.0 | | 18.0 | 5.0 | 22.0 | | 18.0 | | | | |
| Max Q Clear Time (g_c+I1), s | 2.2 | 8.1 | | 10.0 | 4.0 | 9.8 | | 2.4 | | | | |
| Green Ext Time (p_c), s | 0.0 | 1.7 | | 0.6 | 0.0 | 2.7 | | 0.0 | | | | |

| Intersection Summary | | |
|---|---|---|
| HCM 6th Ctrl Delay | 12.1 | |
| HCM 6th LOS | B | |

| Lane Group | EBL | EBT | EBR | WBL | WBT | NBL | NBT | SBL | SBT | SBR |
|---|---|---|---|---|---|---|---|---|---|---|
| Lane Configurations | | | | | | | | | | |
| Traffic Volume (vph) | 178 | 9 | 107 | 1 | 9 | 125 | 337 | 10 | 371 | 277 |
| Future Volume (vph) | 178 | 9 | 107 | 1 | 9 | 125 | 337 | 10 | 371 | 277 |
| Turn Type | Perm | NA | pm+ov | Perm | NA | pm+pt | NA | pm+pt | NA | Perm |
| Protected Phases | | 4 | 5 | | 8 | 5 | 2 | 1 | 6 | |
| Permitted Phases | 4 | | 4 | 8 | | 2 | | 6 | | 6 |
| Detector Phase | 4 | 4 | 5 | 8 | 8 | 5 | 2 | 1 | 6 | 6 |
| Switch Phase | | | | | | | | | | |
| Minimum Initial (s) | 5.0 | 5.0 | 5.0 | 5.0 | 5.0 | 5.0 | 5.0 | 5.0 | 5.0 | 5.0 |
| Minimum Split (s) | 23.0 | 23.0 | 10.0 | 23.0 | 23.0 | 10.0 | 23.0 | 10.0 | 23.0 | 23.0 |
| Total Split (s) | 23.0 | 23.0 | 10.0 | 23.0 | 23.0 | 10.0 | 27.0 | 10.0 | 27.0 | 27.0 |
| Total Split (%) | 38.3% | 38.3% | 16.7% | 38.3% | 38.3% | 16.7% | 45.0% | 16.7% | 45.0% | 45.0% |
| Yellow Time (s) | 4.0 | 4.0 | 4.0 | 4.0 | 4.0 | 4.0 | 4.0 | 4.0 | 4.0 | 4.0 |
| All-Red Time (s) | 1.0 | 1.0 | 1.0 | 1.0 | 1.0 | 1.0 | 1.0 | 1.0 | 1.0 | 1.0 |
| Lost Time Adjust (s) | 0.0 | 0.0 | 0.0 | 0.0 | 0.0 | 0.0 | 0.0 | 0.0 | 0.0 | 0.0 |
| Total Lost Time (s) | 5.0 | 5.0 | 5.0 | 5.0 | 5.0 | 5.0 | 5.0 | 5.0 | 5.0 | 5.0 |
| Lead/Lag | | | Lead | | | Lead | Lag | Lead | Lag | Lag |
| Lead-Lag Optimize? | | | | | | | | | | |
| Recall Mode | None | None | None | None | None | None | C-Max | None | C-Max | C-Max |

**Intersection Summary**

Cycle Length: 60
Actuated Cycle Length: 60
Offset: 0 (0%), Referenced to phase 2:NBTL and 6:SBTL, Start of Green
Natural Cycle: 60
Control Type: Actuated-Coordinated
Description: Beckner Rd.

Splits and Phases: 3: Richards Ave. & Beckner Rd.

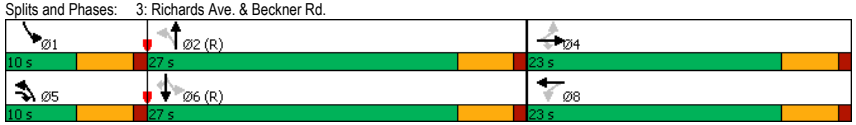






| Movement | EBL | EBT | EBR | WBL | WBT | WBR | NBL | NBT | NBR | SBL | SBT | SBR |
|---|---|---|---|---|---|---|---|---|---|---|---|---|
| Lane Configurations | | | | | | | | | | | | |
| Traffic Volume (veh/h) | 178 | 9 | 107 | 1 | 9 | 4 | 125 | 337 | 1 | 10 | 371 | 277 |
| Future Volume (veh/h) | 178 | 9 | 107 | 1 | 9 | 4 | 125 | 337 | 1 | 10 | 371 | 277 |
| Initial Q (Qb), veh | 0 | 0 | 0 | 0 | 0 | 0 | 0 | 0 | 0 | 0 | 0 | 0 |
| Ped-Bike Adj(A_pbT) | 1.00 | | 1.00 | 1.00 | | 1.00 | 1.00 | | 1.00 | 1.00 | | 1.00 |
| Parking Bus, Adj | 1.00 | 1.00 | 1.00 | 1.00 | 1.00 | 1.00 | 1.00 | 1.00 | 1.00 | 1.00 | 1.00 | 1.00 |
| Work Zone On Approach | | No | | | No | | | No | | | No | |
| Adj Sat Flow, veh/h/ln | 1870 | 1870 | 1870 | 1870 | 1870 | 1870 | 1870 | 1870 | 1870 | 1870 | 1870 | 1870 |
| Adj Flow Rate, veh/h | 185 | 9 | 111 | 1 | 9 | 4 | 130 | 351 | 1 | 10 | 386 | 289 |
| Peak Hour Factor | 0.96 | 0.96 | 0.96 | 0.96 | 0.96 | 0.96 | 0.96 | 0.96 | 0.96 | 0.96 | 0.96 | 0.96 |
| Percent Heavy Veh, % | 2 | 2 | 2 | 2 | 2 | 2 | 2 | 2 | 2 | 2 | 2 | 2 |
| Cap, veh/h | 356 | 326 | 394 | 337 | 214 | 95 | 536 | 1049 | 3 | 617 | 938 | 795 |
| Arrive On Green | 0.17 | 0.17 | 0.17 | 0.17 | 0.17 | 0.17 | 0.07 | 0.56 | 0.56 | 0.01 | 0.50 | 0.50 |
| Sat Flow, veh/h | 1401 | 1870 | 1585 | 1272 | 1227 | 545 | 1781 | 1864 | 5 | 1781 | 1870 | 1585 |
| Grp Volume(v), veh/h | 185 | 9 | 111 | 1 | 0 | 13 | 130 | 0 | 352 | 10 | 386 | 289 |
| Grp Sat Flow(s),veh/h/ln | 1401 | 1870 | 1585 | 1272 | 0 | 1772 | 1781 | 0 | 1869 | 1781 | 1870 | 1585 |
| Q Serve(g_s), s | 7.6 | 0.2 | 3.4 | 0.0 | 0.0 | 0.4 | 2.0 | 0.0 | 6.1 | 0.2 | 7.8 | 6.7 |
| Cycle Q Clear(g_c), s | 8.0 | 0.2 | 3.4 | 0.3 | 0.0 | 0.4 | 2.0 | 0.0 | 6.1 | 0.2 | 7.8 | 6.7 |
| Prop In Lane | 1.00 | | 1.00 | 1.00 | | 0.31 | 1.00 | | 0.00 | 1.00 | | 1.00 |
| Lane Grp Cap(c), veh/h | 356 | 326 | 394 | 337 | 0 | 309 | 536 | 0 | 1052 | 617 | 938 | 795 |
| V/C Ratio(X) | 0.52 | 0.03 | 0.28 | 0.00 | 0.00 | 0.04 | 0.24 | 0.00 | 0.33 | 0.02 | 0.41 | 0.36 |
| Avail Cap(c_a), veh/h | 532 | 561 | 592 | 496 | 0 | 532 | 553 | 0 | 1052 | 743 | 938 | 795 |
| HCM Platoon Ratio | 1.00 | 1.00 | 1.00 | 1.00 | 1.00 | 1.00 | 1.00 | 1.00 | 1.00 | 1.00 | 1.00 | 1.00 |
| Upstream Filter(I) | 1.00 | 1.00 | 1.00 | 1.00 | 0.00 | 1.00 | 1.00 | 0.00 | 1.00 | 1.00 | 1.00 | 1.00 |
| Uniform Delay (d), s/veh | 23.9 | 20.5 | 18.2 | 20.7 | 0.0 | 20.6 | 6.2 | 0.0 | 7.1 | 7.2 | 9.4 | 9.1 |
| Incr Delay (d2), s/veh | 1.2 | 0.0 | 0.4 | 0.0 | 0.0 | 0.1 | 0.2 | 0.0 | 0.9 | 0.0 | 1.3 | 1.3 |
| Initial Q Delay(d3),s/veh | 0.0 | 0.0 | 0.0 | 0.0 | 0.0 | 0.0 | 0.0 | 0.0 | 0.0 | 0.0 | 0.0 | 0.0 |
| %ile BackOfQ(95%),veh/ln | 4.1 | 0.2 | 2.0 | 0.0 | 0.0 | 0.2 | 1.0 | 0.0 | 3.7 | 0.1 | 5.2 | 3.8 |
| Unsig. Movement Delay, s/veh | | | | | | | | | | | | |
| LnGrp Delay(d),s/veh | 25.1 | 20.6 | 18.6 | 20.7 | 0.0 | 20.6 | 6.5 | 0.0 | 7.9 | 7.2 | 10.7 | 10.4 |
| LnGrp LOS | C | C | B | C | A | C | A | A | A | A | B | B |
| Approach Vol, veh/h | | 305 | | | 14 | | | 482 | | | 685 | |
| Approach Delay, s/veh | | 22.6 | | | 20.6 | | | 7.5 | | | 10.5 | |
| Approach LOS | | C | | | C | | | A | | | B | |

| Timer - Assigned Phs | 1 | 2 | | 4 | 5 | 6 | | 8 | | | | |
|---|---|---|---|---|---|---|---|---|---|---|---|---|
| Phs Duration (G+Y+Rc), s | 5.8 | 38.8 | | 15.5 | 9.4 | 35.1 | | 15.5 | | | | |
| Change Period (Y+Rc), s | 5.0 | 5.0 | | 5.0 | 5.0 | 5.0 | | 5.0 | | | | |
| Max Green Setting (Gmax), s | 5.0 | 22.0 | | 18.0 | 5.0 | 22.0 | | 18.0 | | | | |
| Max Q Clear Time (g_c+I1), s | 2.2 | 8.1 | | 10.0 | 4.0 | 9.8 | | 2.4 | | | | |
| Green Ext Time (p_c), s | 0.0 | 1.7 | | 0.6 | 0.0 | 2.7 | | 0.0 | | | | |

| Intersection Summary | | |
|---|---|---|
| HCM 6th Ctrl Delay | 12.1 | |
| HCM 6th LOS | B | |

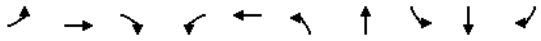

| Lane Group | EBL | EBT | EBR | WBL | WBT | NBL | NBT | SBL | SBT | SBR |
|---|---|---|---|---|---|---|---|---|---|---|
| Lane Configurations | | | | | | | | | | |
| Traffic Volume (vph) | 240 | 13 | 136 | 1 | 13 | 148 | 401 | 11 | 441 | 341 |
| Future Volume (vph) | 240 | 13 | 136 | 1 | 13 | 148 | 401 | 11 | 441 | 341 |
| Turn Type | Perm | NA | pm+ov | Perm | NA | pm+pt | NA | pm+pt | NA | Perm |
| Protected Phases | | 4 | 5 | | 8 | 5 | 2 | 1 | 6 | |
| Permitted Phases | 4 | | 4 | 8 | | 2 | | 6 | | 6 |
| Detector Phase | 4 | 4 | 5 | 8 | 8 | 5 | 2 | 1 | 6 | 6 |
| Switch Phase | | | | | | | | | | |
| Minimum Initial (s) | 5.0 | 5.0 | 5.0 | 5.0 | 5.0 | 5.0 | 5.0 | 5.0 | 5.0 | 5.0 |
| Minimum Split (s) | 23.0 | 23.0 | 10.0 | 23.0 | 23.0 | 10.0 | 23.0 | 10.0 | 23.0 | 23.0 |
| Total Split (s) | 23.0 | 23.0 | 10.0 | 23.0 | 23.0 | 10.0 | 27.0 | 10.0 | 27.0 | 27.0 |
| Total Split (%) | 38.3% | 38.3% | 16.7% | 38.3% | 38.3% | 16.7% | 45.0% | 16.7% | 45.0% | 45.0% |
| Yellow Time (s) | 4.0 | 4.0 | 4.0 | 4.0 | 4.0 | 4.0 | 4.0 | 4.0 | 4.0 | 4.0 |
| All-Red Time (s) | 1.0 | 1.0 | 1.0 | 1.0 | 1.0 | 1.0 | 1.0 | 1.0 | 1.0 | 1.0 |
| Lost Time Adjust (s) | 0.0 | 0.0 | 0.0 | 0.0 | 0.0 | 0.0 | 0.0 | 0.0 | 0.0 | 0.0 |
| Total Lost Time (s) | 5.0 | 5.0 | 5.0 | 5.0 | 5.0 | 5.0 | 5.0 | 5.0 | 5.0 | 5.0 |
| Lead/Lag | | | Lead | | | Lead | Lag | Lead | Lag | Lag |
| Lead-Lag Optimize? | | | | | | | | | | |
| Recall Mode | None | None | None | None | None | None | C-Max | None | C-Max | C-Max |

**Intersection Summary**

Cycle Length: 60
Actuated Cycle Length: 60
Offset: 0 (0%), Referenced to phase 2:NBTL and 6:SBTL, Start of Green
Natural Cycle: 60
Control Type: Actuated-Coordinated
Description: Beckner Rd.

Splits and Phases: 3: Richards Ave. & Beckner Rd.

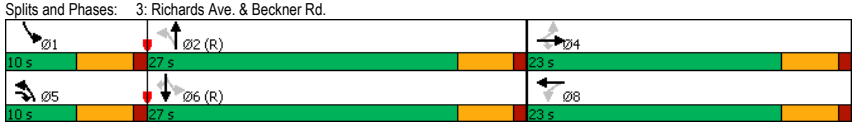








| Movement | EBL | EBT | EBR | WBL | WBT | WBR | NBL | NBT | NBR | SBL | SBT | SBR |
|---|---|---|---|---|---|---|---|---|---|---|---|---|
| Lane Configurations | | | | | | | | | | | | |
| Traffic Volume (veh/h) | 240 | 13 | 136 | 1 | 13 | 5 | 148 | 401 | 1 | 11 | 441 | 341 |
| Future Volume (veh/h) | 240 | 13 | 136 | 1 | 13 | 5 | 148 | 401 | 1 | 11 | 441 | 341 |
| Initial Q (Qb), veh | 0 | 0 | 0 | 0 | 0 | 0 | 0 | 0 | 0 | 0 | 0 | 0 |
| Ped-Bike Adj(A_pbT) | 1.00 | | 1.00 | 1.00 | | 1.00 | 1.00 | | 1.00 | 1.00 | | 1.00 |
| Parking Bus, Adj | 1.00 | 1.00 | 1.00 | 1.00 | 1.00 | 1.00 | 1.00 | 1.00 | 1.00 | 1.00 | 1.00 | 1.00 |
| Work Zone On Approach | | No | | | No | | | No | | | No | |
| Adj Sat Flow, veh/h/ln | 1870 | 1870 | 1870 | 1870 | 1870 | 1870 | 1870 | 1870 | 1870 | 1870 | 1870 | 1870 |
| Adj Flow Rate, veh/h | 250 | 14 | 142 | 1 | 14 | 5 | 154 | 418 | 1 | 11 | 459 | 355 |
| Peak Hour Factor | 0.96 | 0.96 | 0.96 | 0.96 | 0.96 | 0.96 | 0.96 | 0.96 | 0.96 | 0.96 | 0.96 | 0.96 |
| Percent Heavy Veh, % | 2 | 2 | 2 | 2 | 2 | 2 | 2 | 2 | 2 | 2 | 2 | 2 |
| Cap, veh/h | 420 | 418 | 476 | 388 | 294 | 105 | 439 | 956 | 2 | 505 | 841 | 713 |
| Arrive On Green | 0.22 | 0.22 | 0.22 | 0.22 | 0.22 | 0.22 | 0.08 | 0.51 | 0.51 | 0.01 | 0.45 | 0.45 |
| Sat Flow, veh/h | 1393 | 1870 | 1585 | 1231 | 1316 | 470 | 1781 | 1865 | 4 | 1781 | 1870 | 1585 |
| Grp Volume(v), veh/h | 250 | 14 | 142 | 1 | 0 | 19 | 154 | 0 | 419 | 11 | 459 | 355 |
| Grp Sat Flow(s),veh/h/ln | 1393 | 1870 | 1585 | 1231 | 0 | 1786 | 1781 | 0 | 1870 | 1781 | 1870 | 1585 |
| Q Serve(g_s), s | 10.3 | 0.4 | 4.1 | 0.0 | 0.0 | 0.5 | 2.6 | 0.0 | 8.4 | 0.2 | 10.7 | 9.5 |
| Cycle Q Clear(g_c), s | 10.8 | 0.4 | 4.1 | 0.4 | 0.0 | 0.5 | 2.6 | 0.0 | 8.4 | 0.2 | 10.7 | 9.5 |
| Prop In Lane | 1.00 | | 1.00 | 1.00 | | 0.26 | 1.00 | | 0.00 | 1.00 | | 1.00 |
| Lane Grp Cap(c), veh/h | 420 | 418 | 476 | 388 | 0 | 399 | 439 | 0 | 958 | 505 | 841 | 713 |
| V/C Ratio(X) | 0.60 | 0.03 | 0.30 | 0.00 | 0.00 | 0.05 | 0.35 | 0.00 | 0.44 | 0.02 | 0.55 | 0.50 |
| Avail Cap(c_a), veh/h | 526 | 561 | 597 | 482 | 0 | 536 | 450 | 0 | 958 | 628 | 841 | 713 |
| HCM Platoon Ratio | 1.00 | 1.00 | 1.00 | 1.00 | 1.00 | 1.00 | 1.00 | 1.00 | 1.00 | 1.00 | 1.00 | 1.00 |
| Upstream Filter(I) | 1.00 | 1.00 | 1.00 | 1.00 | 0.00 | 1.00 | 1.00 | 0.00 | 1.00 | 1.00 | 1.00 | 1.00 |
| Uniform Delay (d), s/veh | 22.5 | 18.2 | 16.1 | 18.4 | 0.0 | 18.3 | 8.4 | 0.0 | 9.2 | 8.9 | 12.0 | 11.7 |
| Incr Delay (d2), s/veh | 1.4 | 0.0 | 0.3 | 0.0 | 0.0 | 0.0 | 0.5 | 0.0 | 1.5 | 0.0 | 2.5 | 2.5 |
| Initial Q Delay(d3),s/veh | 0.0 | 0.0 | 0.0 | 0.0 | 0.0 | 0.0 | 0.0 | 0.0 | 0.0 | 0.0 | 0.0 | 0.0 |
| %ile BackOfQ(95%),veh/ln | 5.5 | 0.2 | 2.3 | 0.0 | 0.0 | 0.3 | 1.5 | 0.0 | 5.6 | 0.1 | 7.7 | 5.9 |
| Unsig. Movement Delay, s/veh | | | | | | | | | | | | |
| LnGrp Delay(d),s/veh | 23.9 | 18.3 | 16.5 | 18.4 | 0.0 | 18.3 | 8.9 | 0.0 | 10.6 | 8.9 | 14.6 | 14.2 |
| LnGrp LOS | C | B | B | B | A | B | A | A | B | A | B | B |
| Approach Vol, veh/h | | 406 | | | 20 | | | 573 | | | 825 | |
| Approach Delay, s/veh | | 21.1 | | | 18.3 | | | 10.2 | | | 14.3 | |
| Approach LOS | | C | | | B | | | B | | | B | |

| Timer - Assigned Phs | 1 | 2 | | 4 | 5 | 6 | | 8 | | | | |
|---|---|---|---|---|---|---|---|---|---|---|---|---|
| Phs Duration (G+Y+Rc), s | 5.8 | 35.8 | | 18.4 | 9.6 | 32.0 | | 18.4 | | | | |
| Change Period (Y+Rc), s | 5.0 | 5.0 | | 5.0 | 5.0 | 5.0 | | 5.0 | | | | |
| Max Green Setting (Gmax), s | 5.0 | 22.0 | | 18.0 | 5.0 | 22.0 | | 18.0 | | | | |
| Max Q Clear Time (g_c+I1), s | 2.2 | 10.4 | | 12.8 | 4.6 | 12.7 | | 2.5 | | | | |
| Green Ext Time (p_c), s | 0.0 | 1.9 | | 0.6 | 0.0 | 2.9 | | 0.0 | | | | |

| Intersection Summary | | | | | | | | | | | | |
|---|---|---|---|---|---|---|---|---|---|---|---|---|
| HCM 6th Ctrl Delay | | | 14.6 | | | | | | | | | |
| HCM 6th LOS | | | B | | | | | | | | | |

| Lane Group | EBL | EBT | EBR | WBL | WBT | NBL | NBT | SBL | SBT | SBR |
|---|---|---|---|---|---|---|---|---|---|---|
| Lane Configurations | | | | | | | | | | |
| Traffic Volume (vph) | 240 | 13 | 136 | 1 | 13 | 148 | 401 | 11 | 441 | 341 |
| Future Volume (vph) | 240 | 13 | 136 | 1 | 13 | 148 | 401 | 11 | 441 | 341 |
| Turn Type | Perm | NA | pm+ov | Perm | NA | pm+pt | NA | pm+pt | NA | Perm |
| Protected Phases | | 4 | 5 | | 8 | 5 | 2 | 1 | 6 | |
| Permitted Phases | 4 | | 4 | 8 | | 2 | | 6 | | 6 |
| Detector Phase | 4 | 4 | 5 | 8 | 8 | 5 | 2 | 1 | 6 | 6 |
| Switch Phase | | | | | | | | | | |
| Minimum Initial (s) | 5.0 | 5.0 | 5.0 | 5.0 | 5.0 | 5.0 | 5.0 | 5.0 | 5.0 | 5.0 |
| Minimum Split (s) | 23.0 | 23.0 | 10.0 | 23.0 | 23.0 | 10.0 | 23.0 | 10.0 | 23.0 | 23.0 |
| Total Split (s) | 23.0 | 23.0 | 10.0 | 23.0 | 23.0 | 10.0 | 27.0 | 10.0 | 27.0 | 27.0 |
| Total Split (%) | 38.3% | 38.3% | 16.7% | 38.3% | 38.3% | 16.7% | 45.0% | 16.7% | 45.0% | 45.0% |
| Yellow Time (s) | 4.0 | 4.0 | 4.0 | 4.0 | 4.0 | 4.0 | 4.0 | 4.0 | 4.0 | 4.0 |
| All-Red Time (s) | 1.0 | 1.0 | 1.0 | 1.0 | 1.0 | 1.0 | 1.0 | 1.0 | 1.0 | 1.0 |
| Lost Time Adjust (s) | 0.0 | 0.0 | 0.0 | 0.0 | 0.0 | 0.0 | 0.0 | 0.0 | 0.0 | 0.0 |
| Total Lost Time (s) | 5.0 | 5.0 | 5.0 | 5.0 | 5.0 | 5.0 | 5.0 | 5.0 | 5.0 | 5.0 |
| Lead/Lag | | | Lead | | | Lead | Lag | Lead | Lag | Lag |
| Lead-Lag Optimize? | | | | | | | | | | |
| Recall Mode | None | None | None | None | None | None | C-Max | None | C-Max | C-Max |

**Intersection Summary**

Cycle Length: 60
Actuated Cycle Length: 60
Offset: 0 (0%), Referenced to phase 2:NBTL and 6:SBTL, Start of Green
Natural Cycle: 60
Control Type: Actuated-Coordinated
Description: Beckner Rd.

Splits and Phases: 3: Richards Ave. & Beckner Rd.

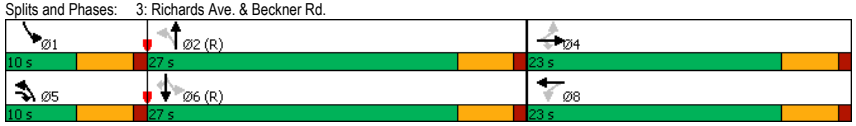






| Movement | EBL | EBT | EBR | WBL | WBT | WBR | NBL | NBT | NBR | SBL | SBT | SBR |
|---|---|---|---|---|---|---|---|---|---|---|---|---|
| Lane Configurations | | | | | | | | | | | | |
| Traffic Volume (veh/h) | 240 | 13 | 136 | 1 | 13 | 5 | 148 | 401 | 1 | 11 | 441 | 341 |
| Future Volume (veh/h) | 240 | 13 | 136 | 1 | 13 | 5 | 148 | 401 | 1 | 11 | 441 | 341 |
| Initial Q (Qb), veh | 0 | 0 | 0 | 0 | 0 | 0 | 0 | 0 | 0 | 0 | 0 | 0 |
| Ped-Bike Adj(A_pbT) | 1.00 | | 1.00 | 1.00 | | 1.00 | 1.00 | | 1.00 | 1.00 | | 1.00 |
| Parking Bus, Adj | 1.00 | 1.00 | 1.00 | 1.00 | 1.00 | 1.00 | 1.00 | 1.00 | 1.00 | 1.00 | 1.00 | 1.00 |
| Work Zone On Approach | | No | | | No | | | No | | | No | |
| Adj Sat Flow, veh/h/ln | 1870 | 1870 | 1870 | 1870 | 1870 | 1870 | 1870 | 1870 | 1870 | 1870 | 1870 | 1870 |
| Adj Flow Rate, veh/h | 250 | 14 | 142 | 1 | 14 | 5 | 154 | 418 | 1 | 11 | 459 | 355 |
| Peak Hour Factor | 0.96 | 0.96 | 0.96 | 0.96 | 0.96 | 0.96 | 0.96 | 0.96 | 0.96 | 0.96 | 0.96 | 0.96 |
| Percent Heavy Veh, % | 2 | 2 | 2 | 2 | 2 | 2 | 2 | 2 | 2 | 2 | 2 | 2 |
| Cap, veh/h | 420 | 418 | 476 | 388 | 294 | 105 | 439 | 956 | 2 | 505 | 841 | 713 |
| Arrive On Green | 0.22 | 0.22 | 0.22 | 0.22 | 0.22 | 0.22 | 0.08 | 0.51 | 0.51 | 0.01 | 0.45 | 0.45 |
| Sat Flow, veh/h | 1393 | 1870 | 1585 | 1231 | 1316 | 470 | 1781 | 1865 | 4 | 1781 | 1870 | 1585 |
| Grp Volume(v), veh/h | 250 | 14 | 142 | 1 | 0 | 19 | 154 | 0 | 419 | 11 | 459 | 355 |
| Grp Sat Flow(s),veh/h/ln | 1393 | 1870 | 1585 | 1231 | 0 | 1786 | 1781 | 0 | 1870 | 1781 | 1870 | 1585 |
| Q Serve(g_s), s | 10.3 | 0.4 | 4.1 | 0.0 | 0.0 | 0.5 | 2.6 | 0.0 | 8.4 | 0.2 | 10.7 | 9.5 |
| Cycle Q Clear(g_c), s | 10.8 | 0.4 | 4.1 | 0.4 | 0.0 | 0.5 | 2.6 | 0.0 | 8.4 | 0.2 | 10.7 | 9.5 |
| Prop In Lane | 1.00 | | 1.00 | 1.00 | | 0.26 | 1.00 | | 0.00 | 1.00 | | 1.00 |
| Lane Grp Cap(c), veh/h | 420 | 418 | 476 | 388 | 0 | 399 | 439 | 0 | 958 | 505 | 841 | 713 |
| V/C Ratio(X) | 0.60 | 0.03 | 0.30 | 0.00 | 0.00 | 0.05 | 0.35 | 0.00 | 0.44 | 0.02 | 0.55 | 0.50 |
| Avail Cap(c_a), veh/h | 526 | 561 | 597 | 482 | 0 | 536 | 450 | 0 | 958 | 628 | 841 | 713 |
| HCM Platoon Ratio | 1.00 | 1.00 | 1.00 | 1.00 | 1.00 | 1.00 | 1.00 | 1.00 | 1.00 | 1.00 | 1.00 | 1.00 |
| Upstream Filter(I) | 1.00 | 1.00 | 1.00 | 1.00 | 0.00 | 1.00 | 1.00 | 0.00 | 1.00 | 1.00 | 1.00 | 1.00 |
| Uniform Delay (d), s/veh | 22.5 | 18.2 | 16.1 | 18.4 | 0.0 | 18.3 | 8.4 | 0.0 | 9.2 | 8.9 | 12.0 | 11.7 |
| Incr Delay (d2), s/veh | 1.4 | 0.0 | 0.3 | 0.0 | 0.0 | 0.0 | 0.5 | 0.0 | 1.5 | 0.0 | 2.5 | 2.5 |
| Initial Q Delay(d3),s/veh | 0.0 | 0.0 | 0.0 | 0.0 | 0.0 | 0.0 | 0.0 | 0.0 | 0.0 | 0.0 | 0.0 | 0.0 |
| %ile BackOfQ(95%),veh/ln | 5.5 | 0.2 | 2.3 | 0.0 | 0.0 | 0.3 | 1.5 | 0.0 | 5.6 | 0.1 | 7.7 | 5.9 |
| Unsig. Movement Delay, s/veh | | | | | | | | | | | | |
| LnGrp Delay(d),s/veh | 23.9 | 18.3 | 16.5 | 18.4 | 0.0 | 18.3 | 8.9 | 0.0 | 10.6 | 8.9 | 14.6 | 14.2 |
| LnGrp LOS | C | B | B | B | A | B | A | A | B | A | B | B |
| Approach Vol, veh/h | | 406 | | | 20 | | | 573 | | | 825 | |
| Approach Delay, s/veh | | 21.1 | | | 18.3 | | | 10.2 | | | 14.3 | |
| Approach LOS | | C | | | B | | | B | | | B | |

| Timer - Assigned Phs | 1 | 2 | | 4 | 5 | 6 | | 8 | | | | |
|---|---|---|---|---|---|---|---|---|---|---|---|---|
| Phs Duration (G+Y+Rc), s | 5.8 | 35.8 | | 18.4 | 9.6 | 32.0 | | 18.4 | | | | |
| Change Period (Y+Rc), s | 5.0 | 5.0 | | 5.0 | 5.0 | 5.0 | | 5.0 | | | | |
| Max Green Setting (Gmax), s | 5.0 | 22.0 | | 18.0 | 5.0 | 22.0 | | 18.0 | | | | |
| Max Q Clear Time (g_c+I1), s | 2.2 | 10.4 | | 12.8 | 4.6 | 12.7 | | 2.5 | | | | |
| Green Ext Time (p_c), s | 0.0 | 1.9 | | 0.6 | 0.0 | 2.9 | | 0.0 | | | | |

**Intersection Summary**

| | | | |
|---|---|---|---|
| HCM 6th Ctrl Delay | | 14.6 | |
| HCM 6th LOS | | B | |

| Intersection | |
|---|---|
| Intersection Delay, s/veh | 3.4 |
| Intersection LOS | A |

| Approach | EB | WB | SB |
|---|---|---|---|
| Entry Lanes | 2 | 2 | 1 |
| Conflicting Circle Lanes | 2 | 2 | 2 |
| Adj Approach Flow, veh/h | 231 | 186 | 67 |
| Demand Flow Rate, veh/h | 236 | 190 | 68 |
| Vehicles Circulating, veh/h | 62 | 39 | 102 |
| Vehicles Exiting, veh/h | 108 | 259 | 127 |
| Ped Vol Crossing Leg, #/h | 0 | 0 | 0 |
| Ped Cap Adj | 1.000 | 1.000 | 1.000 |
| Approach Delay, s/veh | 3.5 | 3.3 | 3.2 |
| Approach LOS | A | A | A |

| Lane | Left | Right | Left | Right | Left |
|---|---|---|---|---|---|
| Designated Moves | LT | TR | LT | TR | LR |
| Assumed Moves | LT | TR | LT | TR | LR |
| RT Channelized | | | | | |
| Lane Util | 0.470 | 0.530 | 0.468 | 0.532 | 1.000 |
| Follow-Up Headway, s | 2.667 | 2.535 | 2.667 | 2.535 | 2.535 |
| Critical Headway, s | 4.645 | 4.328 | 4.645 | 4.328 | 4.328 |
| Entry Flow, veh/h | 111 | 125 | 89 | 101 | 68 |
| Cap Entry Lane, veh/h | 1275 | 1347 | 1302 | 1374 | 1302 |
| Entry HV Adj Factor | 0.979 | 0.980 | 0.982 | 0.976 | 0.985 |
| Flow Entry, veh/h | 109 | 123 | 87 | 99 | 67 |
| Cap Entry, veh/h | 1248 | 1320 | 1279 | 1341 | 1283 |
| V/C Ratio | 0.087 | 0.093 | 0.068 | 0.074 | 0.052 |
| Control Delay, s/veh | 3.6 | 3.5 | 3.4 | 3.3 | 3.2 |
| LOS | A | A | A | A | A |
| 95th %tile Queue, veh | 0 | 0 | 0 | 0 | 0 |

| Intersection | |
|---|---|
| Intersection Delay, s/veh | 5.0 |
| Intersection LOS | A |

| Approach | EB | WB | SB |
|---|---|---|---|
| Entry Lanes | 2 | 2 | 1 |
| Conflicting Circle Lanes | 2 | 2 | 2 |
| Adj Approach Flow, veh/h | 565 | 425 | 264 |
| Demand Flow Rate, veh/h | 576 | 434 | 270 |
| Vehicles Circulating, veh/h | 190 | 47 | 291 |
| Vehicles Exiting, veh/h | 371 | 719 | 190 |
| Ped Vol Crossing Leg, #/h | 0 | 0 | 0 |
| Ped Cap Adj | 1.000 | 1.000 | 1.000 |
| Approach Delay, s/veh | 5.4 | 4.1 | 5.6 |
| Approach LOS | A | A | A |

| Lane | Left | Right | Left | Right | Left |
|---|---|---|---|---|---|
| Designated Moves | LT | TR | LT | TR | LR |
| Assumed Moves | LT | TR | LT | TR | LR |
| RT Channelized | | | | | |
| Lane Util | 0.470 | 0.530 | 0.470 | 0.530 | 1.000 |
| Follow-Up Headway, s | 2.667 | 2.535 | 2.667 | 2.535 | 2.535 |
| Critical Headway, s | 4.645 | 4.328 | 4.645 | 4.328 | 4.328 |
| Entry Flow, veh/h | 271 | 305 | 204 | 230 | 270 |
| Cap Entry Lane, veh/h | 1133 | 1208 | 1293 | 1364 | 1109 |
| Entry HV Adj Factor | 0.979 | 0.981 | 0.980 | 0.980 | 0.978 |
| Flow Entry, veh/h | 265 | 299 | 200 | 225 | 264 |
| Cap Entry, veh/h | 1110 | 1186 | 1267 | 1337 | 1084 |
| V/C Ratio | 0.239 | 0.252 | 0.158 | 0.169 | 0.243 |
| Control Delay, s/veh | 5.5 | 5.3 | 4.2 | 4.1 | 5.6 |
| LOS | A | A | A | A | A |
| 95th %tile Queue, veh | 1 | 1 | 1 | 1 | 1 |

| Intersection | |
|---|---|
| Intersection Delay, s/veh | 6.9 |
| Intersection LOS | A |

| Approach | EB | WB | SB |
|---|---|---|---|
| Entry Lanes | 2 | 2 | 1 |
| Conflicting Circle Lanes | 2 | 2 | 2 |
| Adj Approach Flow, veh/h | 707 | 673 | 443 |
| Demand Flow Rate, veh/h | 721 | 687 | 452 |
| Vehicles Circulating, veh/h | 372 | 47 | 402 |
| Vehicles Exiting, veh/h | 482 | 1046 | 332 |
| Ped Vol Crossing Leg, #/h | 0 | 0 | 0 |
| Ped Cap Adj | 1.000 | 1.000 | 1.000 |
| Approach Delay, s/veh | 7.6 | 5.0 | 8.8 |
| Approach LOS | A | A | A |

| Lane | Left | Right | Left | Right | Left |
|---|---|---|---|---|---|
| Designated Moves | LT | TR | LT | TR | LR |
| Assumed Moves | LT | TR | LT | TR | LR |
| RT Channelized | | | | | |
| Lane Util | 0.470 | 0.530 | 0.470 | 0.530 | 1.000 |
| Follow-Up Headway, s | 2.667 | 2.535 | 2.667 | 2.535 | 2.535 |
| Critical Headway, s | 4.645 | 4.328 | 4.645 | 4.328 | 4.328 |
| Entry Flow, veh/h | 339 | 382 | 323 | 364 | 452 |
| Cap Entry Lane, veh/h | 959 | 1035 | 1293 | 1364 | 1009 |
| Entry HV Adj Factor | 0.980 | 0.981 | 0.979 | 0.980 | 0.980 |
| Flow Entry, veh/h | 332 | 375 | 316 | 357 | 443 |
| Cap Entry, veh/h | 939 | 1015 | 1266 | 1337 | 989 |
| V/C Ratio | 0.354 | 0.369 | 0.250 | 0.267 | 0.448 |
| Control Delay, s/veh | 7.7 | 7.5 | 5.0 | 5.0 | 8.8 |
| LOS | A | A | A | A | A |
| 95th %tile Queue, veh | 2 | 2 | 1 | 1 | 2 |

| Intersection | |
|---|---|
| Intersection Delay, s/veh | 3.5 |
| Intersection LOS | A |

| Approach | EB | WB | SB |
|---|---|---|---|
| Entry Lanes | 2 | 2 | 1 |
| Conflicting Circle Lanes | 2 | 2 | 2 |
| Adj Approach Flow, veh/h | 95 | 159 | 184 |
| Demand Flow Rate, veh/h | 97 | 162 | 187 |
| Vehicles Circulating, veh/h | 69 | 19 | 102 |
| Vehicles Exiting, veh/h | 220 | 147 | 79 |
| Ped Vol Crossing Leg, #/h | 0 | 0 | 0 |
| Ped Cap Adj | 1.000 | 1.000 | 1.000 |
| Approach Delay, s/veh | 3.1 | 3.2 | 4.0 |
| Approach LOS | A | A | A |

| Lane | Left | Right | Left | Right | Left |
|---|---|---|---|---|---|
| Designated Moves | LT | TR | LT | TR | LR |
| Assumed Moves | LT | TR | LT | TR | LR |
| RT Channelized | | | | | |
| Lane Util | 0.474 | 0.526 | 0.469 | 0.531 | 1.000 |
| Follow-Up Headway, s | 2.667 | 2.535 | 2.667 | 2.535 | 2.535 |
| Critical Headway, s | 4.645 | 4.328 | 4.645 | 4.328 | 4.328 |
| Entry Flow, veh/h | 46 | 51 | 76 | 86 | 187 |
| Cap Entry Lane, veh/h | 1267 | 1339 | 1326 | 1397 | 1302 |
| Entry HV Adj Factor | 0.975 | 0.992 | 0.983 | 0.980 | 0.984 |
| Flow Entry, veh/h | 45 | 51 | 75 | 84 | 184 |
| Cap Entry, veh/h | 1236 | 1329 | 1304 | 1369 | 1281 |
| V/C Ratio | 0.036 | 0.038 | 0.057 | 0.062 | 0.144 |
| Control Delay, s/veh | 3.2 | 3.0 | 3.2 | 3.1 | 4.0 |
| LOS | A | A | A | A | A |
| 95th %tile Queue, veh | 0 | 0 | 0 | 0 | 1 |

| Intersection | |
|---|---|
| Intersection Delay, s/veh | 4.8 |
| Intersection LOS | A |

| Approach | EB | WB | SB |
|---|---|---|---|
| Entry Lanes | 2 | 2 | 1 |
| Conflicting Circle Lanes | 2 | 2 | 2 |
| Adj Approach Flow, veh/h | 295 | 524 | 306 |
| Demand Flow Rate, veh/h | 301 | 535 | 312 |
| Vehicles Circulating, veh/h | 139 | 41 | 338 |
| Vehicles Exiting, veh/h | 511 | 399 | 238 |
| Ped Vol Crossing Leg, #/h | 0 | 0 | 0 |
| Ped Cap Adj | 1.000 | 1.000 | 1.000 |
| Approach Delay, s/veh | 4.0 | 4.4 | 6.3 |
| Approach LOS | A | A | A |

| Lane | Left | Right | Left | Right | Left |
|---|---|---|---|---|---|
| Designated Moves | LT | TR | LT | TR | LR |
| Assumed Moves | LT | TR | LT | TR | LR |
| RT Channelized | | | | | |
| Lane Util | 0.468 | 0.532 | 0.469 | 0.531 | 1.000 |
| Follow-Up Headway, s | 2.667 | 2.535 | 2.667 | 2.535 | 2.535 |
| Critical Headway, s | 4.645 | 4.328 | 4.645 | 4.328 | 4.328 |
| Entry Flow, veh/h | 141 | 160 | 251 | 284 | 312 |
| Cap Entry Lane, veh/h | 1188 | 1262 | 1300 | 1371 | 1065 |
| Entry HV Adj Factor | 0.983 | 0.977 | 0.982 | 0.979 | 0.981 |
| Flow Entry, veh/h | 139 | 156 | 246 | 278 | 306 |
| Cap Entry, veh/h | 1168 | 1233 | 1276 | 1342 | 1045 |
| V/C Ratio | 0.119 | 0.127 | 0.193 | 0.207 | 0.293 |
| Control Delay, s/veh | 4.1 | 4.0 | 4.5 | 4.4 | 6.3 |
| LOS | A | A | A | A | A |
| 95th %tile Queue, veh | 0 | 0 | 1 | 1 | 1 |

| Intersection | |
|---|---|
| Intersection Delay, s/veh | 6.7 |
| Intersection LOS | A |

| Approach | EB | WB | SB |
|---|---|---|---|
| Entry Lanes | 2 | 2 | 1 |
| Conflicting Circle Lanes | 2 | 2 | 2 |
| Adj Approach Flow, veh/h | 414 | 852 | 450 |
| Demand Flow Rate, veh/h | 422 | 869 | 459 |
| Vehicles Circulating, veh/h | 286 | 41 | 490 |
| Vehicles Exiting, veh/h | 663 | 667 | 420 |
| Ped Vol Crossing Leg, #/h | 0 | 0 | 0 |
| Ped Cap Adj | 1.000 | 1.000 | 1.000 |
| Approach Delay, s/veh | 5.2 | 5.7 | 10.1 |
| Approach LOS | A | A | B |

| Lane | Left | Right | Left | Right | Left |
|---|---|---|---|---|---|
| Designated Moves | LT | TR | LT | TR | LR |
| Assumed Moves | LT | TR | LT | TR | LR |
| RT Channelized | | | | | |
| Lane Util | 0.469 | 0.531 | 0.470 | 0.530 | 1.000 |
| Follow-Up Headway, s | 2.667 | 2.535 | 2.667 | 2.535 | 2.535 |
| Critical Headway, s | 4.645 | 4.328 | 4.645 | 4.328 | 4.328 |
| Entry Flow, veh/h | 198 | 224 | 408 | 461 | 459 |
| Cap Entry Lane, veh/h | 1038 | 1114 | 1300 | 1371 | 936 |
| Entry HV Adj Factor | 0.982 | 0.978 | 0.982 | 0.980 | 0.980 |
| Flow Entry, veh/h | 194 | 219 | 401 | 452 | 450 |
| Cap Entry, veh/h | 1019 | 1090 | 1276 | 1344 | 918 |
| V/C Ratio | 0.191 | 0.201 | 0.314 | 0.336 | 0.490 |
| Control Delay, s/veh | 5.3 | 5.1 | 5.7 | 5.7 | 10.1 |
| LOS | A | A | A | A | B |
| 95th %tile Queue, veh | 1 | 1 | 1 | 1 | 3 |

| Intersection | |
|---|---|
| Intersection Delay, s/veh | 3.2 |
| Intersection LOS | A |

| Approach | EB | WB | NB | SB |
|---|---|---|---|---|
| Entry Lanes | 2 | 2 | 1 | 1 |
| Conflicting Circle Lanes | 2 | 2 | 2 | 2 |
| Adj Approach Flow, veh/h | 181 | 165 | 0 | 3 |
| Demand Flow Rate, veh/h | 185 | 168 | 0 | 3 |
| Vehicles Circulating, veh/h | 1 | 5 | 186 | 167 |
| Vehicles Exiting, veh/h | 169 | 181 | 0 | 6 |
| Ped Vol Crossing Leg, #/h | 0 | 0 | 0 | 0 |
| Ped Cap Adj | 1.000 | 1.000 | 1.000 | 1.000 |
| Approach Delay, s/veh | 3.2 | 3.1 | 0.0 | 2.9 |
| Approach LOS | A | A | - | A |

| Lane | Left | Right | Left | Right | Left | Left |
|---|---|---|---|---|---|---|
| Designated Moves | LT | TR | LT | TR | LTR | LTR |
| Assumed Moves | LT | TR | LT | TR | LTR | LTR |
| RT Channelized | | | | | | |
| Lane Util | 0.470 | 0.530 | 0.470 | 0.530 | 1.000 | 1.000 |
| Follow-Up Headway, s | 2.667 | 2.535 | 2.667 | 2.535 | 2.535 | 2.535 |
| Critical Headway, s | 4.645 | 4.328 | 4.645 | 4.328 | 4.328 | 4.328 |
| Entry Flow, veh/h | 87 | 98 | 79 | 89 | 0 | 3 |
| Cap Entry Lane, veh/h | 1349 | 1419 | 1344 | 1414 | 1212 | 1232 |
| Entry HV Adj Factor | 0.980 | 0.981 | 0.980 | 0.981 | 1.000 | 1.000 |
| Flow Entry, veh/h | 85 | 96 | 77 | 87 | 0 | 3 |
| Cap Entry, veh/h | 1322 | 1393 | 1317 | 1387 | 1212 | 1232 |
| V/C Ratio | 0.065 | 0.069 | 0.059 | 0.063 | 0.000 | 0.002 |
| Control Delay, s/veh | 3.2 | 3.1 | 3.2 | 3.1 | 3.0 | 2.9 |
| LOS | A | A | A | A | A | A |
| 95th %tile Queue, veh | 0 | 0 | 0 | 0 | 0 | 0 |

| Intersection | |
|---|---|
| Intersection Delay, s/veh | 4.2 |
| Intersection LOS | A |

| Approach | EB | WB | NB | SB |
|---|---|---|---|---|
| Entry Lanes | 2 | 2 | 1 | 1 |
| Conflicting Circle Lanes | 2 | 2 | 2 | 2 |
| Adj Approach Flow, veh/h | 482 | 363 | 23 | 71 |
| Demand Flow Rate, veh/h | 491 | 371 | 23 | 72 |
| Vehicles Circulating, veh/h | 94 | 26 | 518 | 388 |
| Vehicles Exiting, veh/h | 366 | 515 | 67 | 9 |
| Ped Vol Crossing Leg, #/h | 0 | 0 | 0 | 0 |
| Ped Cap Adj | 1.000 | 1.000 | 1.000 | 1.000 |
| Approach Delay, s/veh | 4.5 | 3.8 | 4.2 | 4.2 |
| Approach LOS | A | A | A | A |

| Lane | Left | Right | Left | Right | Left | Left |
|---|---|---|---|---|---|---|
| Designated Moves | LT | TR | LT | TR | LTR | LTR |
| Assumed Moves | LT | TR | LT | TR | LTR | LTR |
| RT Channelized | | | | | | |
| Lane Util | 0.470 | 0.530 | 0.469 | 0.531 | 1.000 | 1.000 |
| Follow-Up Headway, s | 2.667 | 2.535 | 2.667 | 2.535 | 2.535 | 2.535 |
| Critical Headway, s | 4.645 | 4.328 | 4.645 | 4.328 | 4.328 | 4.328 |
| Entry Flow, veh/h | 231 | 260 | 174 | 197 | 23 | 72 |
| Cap Entry Lane, veh/h | 1238 | 1311 | 1318 | 1389 | 914 | 1021 |
| Entry HV Adj Factor | 0.980 | 0.982 | 0.983 | 0.979 | 1.000 | 0.986 |
| Flow Entry, veh/h | 226 | 255 | 171 | 193 | 23 | 71 |
| Cap Entry, veh/h | 1213 | 1287 | 1295 | 1360 | 914 | 1007 |
| V/C Ratio | 0.187 | 0.198 | 0.132 | 0.142 | 0.025 | 0.071 |
| Control Delay, s/veh | 4.6 | 4.5 | 3.9 | 3.8 | 4.2 | 4.2 |
| LOS | A | A | A | A | A | A |
| 95th %tile Queue, veh | 1 | 1 | 0 | 0 | 0 | 0 |

| Intersection | |
|---|---|
| Intersection Delay, s/veh | 5.1 |
| Intersection LOS | A |

| Approach | EB | WB | NB | SB |
|---|---|---|---|---|
| Entry Lanes | 2 | 2 | 1 | 1 |
| Conflicting Circle Lanes | 2 | 2 | 2 | 2 |
| Adj Approach Flow, veh/h | 746 | 559 | 23 | 72 |
| Demand Flow Rate, veh/h | 761 | 571 | 23 | 73 |
| Vehicles Circulating, veh/h | 95 | 26 | 789 | 586 |
| Vehicles Exiting, veh/h | 564 | 786 | 67 | 10 |
| Ped Vol Crossing Leg, #/h | 0 | 0 | 0 | 0 |
| Ped Cap Adj | 1.000 | 1.000 | 1.000 | 1.000 |
| Approach Delay, s/veh | 5.6 | 4.5 | 5.3 | 5.0 |
| Approach LOS | A | A | A | A |

| Lane | Left | Right | Left | Right | Left | Left |
|---|---|---|---|---|---|---|
| Designated Moves | LT | TR | LT | TR | LTR | LTR |
| Assumed Moves | LT | TR | LT | TR | LTR | LTR |
| RT Channelized | | | | | | |
| Lane Util | 0.470 | 0.530 | 0.469 | 0.531 | 1.000 | 1.000 |
| Follow-Up Headway, s | 2.667 | 2.535 | 2.667 | 2.535 | 2.535 | 2.535 |
| Critical Headway, s | 4.645 | 4.328 | 4.645 | 4.328 | 4.328 | 4.328 |
| Entry Flow, veh/h | 358 | 403 | 268 | 303 | 23 | 73 |
| Cap Entry Lane, veh/h | 1237 | 1310 | 1318 | 1389 | 726 | 863 |
| Entry HV Adj Factor | 0.980 | 0.982 | 0.982 | 0.979 | 1.000 | 0.986 |
| Flow Entry, veh/h | 351 | 396 | 263 | 297 | 23 | 72 |
| Cap Entry, veh/h | 1212 | 1286 | 1294 | 1361 | 726 | 851 |
| V/C Ratio | 0.289 | 0.308 | 0.203 | 0.218 | 0.032 | 0.085 |
| Control Delay, s/veh | 5.6 | 5.6 | 4.5 | 4.5 | 5.3 | 5.0 |
| LOS | A | A | A | A | A | A |
| 95th %tile Queue, veh | 1 | 1 | 1 | 1 | 0 | 0 |

| Intersection | |
|---|---|
| Intersection Delay, s/veh | 3.2 |
| Intersection LOS | A |

| Approach | EB | WB | NB | SB |
|---|---|---|---|---|
| Entry Lanes | 2 | 2 | 1 | 1 |
| Conflicting Circle Lanes | 2 | 2 | 2 | 2 |
| Adj Approach Flow, veh/h | 222 | 170 | 0 | 31 |
| Demand Flow Rate, veh/h | 226 | 173 | 0 | 31 |
| Vehicles Circulating, veh/h | 11 | 11 | 237 | 157 |
| Vehicles Exiting, veh/h | 177 | 226 | 0 | 27 |
| Ped Vol Crossing Leg, #/h | 0 | 0 | 0 | 0 |
| Ped Cap Adj | 1.000 | 1.000 | 1.000 | 1.000 |
| Approach Delay, s/veh | 3.3 | 3.2 | 0.0 | 3.1 |
| Approach LOS | A | A | - | A |

| Lane | Left | Right | Left | Right | Left | Left |
|---|---|---|---|---|---|---|
| Designated Moves | LT | TR | LT | TR | LTR | LTR |
| Assumed Moves | LT | TR | LT | TR | LTR | LTR |
| RT Channelized | | | | | | |
| Lane Util | 0.469 | 0.531 | 0.468 | 0.532 | 1.000 | 1.000 |
| Follow-Up Headway, s | 2.667 | 2.535 | 2.667 | 2.535 | 2.535 | 2.535 |
| Critical Headway, s | 4.645 | 4.328 | 4.645 | 4.328 | 4.328 | 4.328 |
| Entry Flow, veh/h | 106 | 120 | 81 | 92 | 0 | 31 |
| Cap Entry Lane, veh/h | 1336 | 1407 | 1336 | 1407 | 1161 | 1243 |
| Entry HV Adj Factor | 0.983 | 0.980 | 0.986 | 0.979 | 1.000 | 1.000 |
| Flow Entry, veh/h | 104 | 118 | 80 | 90 | 0 | 31 |
| Cap Entry, veh/h | 1314 | 1378 | 1317 | 1377 | 1161 | 1243 |
| V/C Ratio | 0.079 | 0.085 | 0.061 | 0.065 | 0.000 | 0.025 |
| Control Delay, s/veh | 3.4 | 3.3 | 3.2 | 3.1 | 3.1 | 3.1 |
| LOS | A | A | A | A | A | A |
| 95th %tile Queue, veh | 0 | 0 | 0 | 0 | 0 | 0 |

| Intersection | |
|---|---|
| Intersection Delay, s/veh | 5.1 |
| Intersection LOS | A |

| Approach | EB | WB | NB | SB |
|---|---|---|---|---|
| Entry Lanes | 2 | 2 | 1 | 1 |
| Conflicting Circle Lanes | 2 | 2 | 2 | 2 |
| Adj Approach Flow, veh/h | 574 | 602 | 116 | 89 |
| Demand Flow Rate, veh/h | 586 | 613 | 118 | 91 |
| Vehicles Circulating, veh/h | 73 | 124 | 548 | 693 |
| Vehicles Exiting, veh/h | 711 | 542 | 110 | 44 |
| Ped Vol Crossing Leg, #/h | 0 | 0 | 0 | 0 |
| Ped Cap Adj | 1.000 | 1.000 | 1.000 | 1.000 |
| Approach Delay, s/veh | 4.8 | 5.2 | 5.4 | 5.8 |
| Approach LOS | A | A | A | A |

| Lane | Left | Right | Left | Right | Left | Left |
|---|---|---|---|---|---|---|
| Designated Moves | LT | TR | LT | TR | LTR | LTR |
| Assumed Moves | LT | TR | LT | TR | LTR | LTR |
| RT Channelized | | | | | | |
| Lane Util | 0.469 | 0.531 | 0.470 | 0.530 | 1.000 | 1.000 |
| Follow-Up Headway, s | 2.667 | 2.535 | 2.667 | 2.535 | 2.535 | 2.535 |
| Critical Headway, s | 4.645 | 4.328 | 4.645 | 4.328 | 4.328 | 4.328 |
| Entry Flow, veh/h | 275 | 311 | 288 | 325 | 118 | 91 |
| Cap Entry Lane, veh/h | 1262 | 1335 | 1204 | 1278 | 891 | 788 |
| Entry HV Adj Factor | 0.982 | 0.979 | 0.982 | 0.981 | 0.983 | 0.982 |
| Flow Entry, veh/h | 270 | 304 | 283 | 319 | 116 | 89 |
| Cap Entry, veh/h | 1239 | 1307 | 1182 | 1253 | 876 | 774 |
| V/C Ratio | 0.218 | 0.233 | 0.239 | 0.254 | 0.132 | 0.115 |
| Control Delay, s/veh | 4.8 | 4.8 | 5.2 | 5.1 | 5.4 | 5.8 |
| LOS | A | A | A | A | A | A |
| 95th %tile Queue, veh | 1 | 1 | 1 | 1 | 0 | 0 |

| Intersection | |
|---|---|
| Intersection Delay, s/veh | 6.8 |
| Intersection LOS | A |

| Approach | EB | WB | NB | SB |
|---|---|---|---|---|
| Entry Lanes | 2 | 2 | 1 | 1 |
| Conflicting Circle Lanes | 2 | 2 | 2 | 2 |
| Adj Approach Flow, veh/h | 941 | 986 | 116 | 89 |
| Demand Flow Rate, veh/h | 960 | 1005 | 118 | 91 |
| Vehicles Circulating, veh/h | 73 | 124 | 922 | 1085 |
| Vehicles Exiting, veh/h | 1103 | 916 | 110 | 44 |
| Ped Vol Crossing Leg, #/h | 0 | 0 | 0 | 0 |
| Ped Cap Adj | 1.000 | 1.000 | 1.000 | 1.000 |
| Approach Delay, s/veh | 6.3 | 7.0 | 7.8 | 8.5 |
| Approach LOS | A | A | A | A |

| Lane | Left | Right | Left | Right | Left | Left |
|---|---|---|---|---|---|---|
| Designated Moves | LT | TR | LT | TR | LTR | LTR |
| Assumed Moves | LT | TR | LT | TR | LTR | LTR |
| RT Channelized | | | | | | |
| Lane Util | 0.470 | 0.530 | 0.470 | 0.530 | 1.000 | 1.000 |
| Follow-Up Headway, s | 2.667 | 2.535 | 2.667 | 2.535 | 2.535 | 2.535 |
| Critical Headway, s | 4.645 | 4.328 | 4.645 | 4.328 | 4.328 | 4.328 |
| Entry Flow, veh/h | 451 | 509 | 472 | 533 | 118 | 91 |
| Cap Entry Lane, veh/h | 1262 | 1335 | 1204 | 1278 | 649 | 565 |
| Entry HV Adj Factor | 0.981 | 0.980 | 0.982 | 0.980 | 0.983 | 0.982 |
| Flow Entry, veh/h | 442 | 499 | 463 | 522 | 116 | 89 |
| Cap Entry, veh/h | 1238 | 1308 | 1182 | 1253 | 637 | 554 |
| V/C Ratio | 0.357 | 0.381 | 0.392 | 0.417 | 0.182 | 0.161 |
| Control Delay, s/veh | 6.3 | 6.3 | 7.0 | 7.0 | 7.8 | 8.5 |
| LOS | A | A | A | A | A | A |
| 95th %tile Queue, veh | 2 | 2 | 2 | 2 | 1 | 1 |

| Intersection | |
|---|---|
| Intersection Delay, s/veh | 4.0 |
| Intersection LOS | A |

| Approach | EB | WB | SB |
|---|---|---|---|
| Entry Lanes | 1 | 1 | 1 |
| Conflicting Circle Lanes | 1 | 1 | 1 |
| Adj Approach Flow, veh/h | 195 | 222 | 60 |
| Demand Flow Rate, veh/h | 199 | 227 | 61 |
| Vehicles Circulating, veh/h | 22 | 37 | 147 |
| Vehicles Exiting, veh/h | 186 | 184 | 117 |
| Ped Vol Crossing Leg, #/h | 0 | 0 | 0 |
| Ped Cap Adj | 1.000 | 1.000 | 1.000 |
| Approach Delay, s/veh | 3.9 | 4.2 | 3.5 |
| Approach LOS | A | A | A |

| Lane | Left | Left | Left |
|---|---|---|---|
| Designated Moves | LT | TR | LR |
| Assumed Moves | LT | TR | LR |
| RT Channelized | | | |
| Lane Util | 1.000 | 1.000 | 1.000 |
| Follow-Up Headway, s | 2.609 | 2.609 | 2.609 |
| Critical Headway, s | 4.976 | 4.976 | 4.976 |
| Entry Flow, veh/h | 199 | 227 | 61 |
| Cap Entry Lane, veh/h | 1349 | 1329 | 1188 |
| Entry HV Adj Factor | 0.979 | 0.978 | 0.984 |
| Flow Entry, veh/h | 195 | 222 | 60 |
| Cap Entry, veh/h | 1321 | 1300 | 1168 |
| V/C Ratio | 0.147 | 0.171 | 0.051 |
| Control Delay, s/veh | 3.9 | 4.2 | 3.5 |
| LOS | A | A | A |
| 95th %tile Queue, veh | 1 | 1 | 0 |

| Intersection | |
|---|---|
| Intersection Delay, s/veh | 6.1 |
| Intersection LOS | A |

| Approach | EB | WB | SB |
|---|---|---|---|
| Entry Lanes | 1 | 1 | 1 |
| Conflicting Circle Lanes | 1 | 1 | 1 |
| Adj Approach Flow, veh/h | 517 | 394 | 108 |
| Demand Flow Rate, veh/h | 527 | 402 | 110 |
| Vehicles Circulating, veh/h | 46 | 65 | 310 |
| Vehicles Exiting, veh/h | 374 | 508 | 157 |
| Ped Vol Crossing Leg, #/h | 0 | 0 | 0 |
| Ped Cap Adj | 1.000 | 1.000 | 1.000 |
| Approach Delay, s/veh | 6.6 | 5.7 | 4.6 |
| Approach LOS | A | A | A |

| Lane | Left | Left | Left |
|---|---|---|---|
| Designated Moves | LT | TR | LR |
| Assumed Moves | LT | TR | LR |
| RT Channelized | | | |
| Lane Util | 1.000 | 1.000 | 1.000 |
| Follow-Up Headway, s | 2.609 | 2.609 | 2.609 |
| Critical Headway, s | 4.976 | 4.976 | 4.976 |
| Entry Flow, veh/h | 527 | 402 | 110 |
| Cap Entry Lane, veh/h | 1317 | 1291 | 1006 |
| Entry HV Adj Factor | 0.981 | 0.980 | 0.982 |
| Flow Entry, veh/h | 517 | 394 | 108 |
| Cap Entry, veh/h | 1291 | 1265 | 988 |
| V/C Ratio | 0.400 | 0.311 | 0.109 |
| Control Delay, s/veh | 6.6 | 5.7 | 4.6 |
| LOS | A | A | A |
| 95th %tile Queue, veh | 2 | 1 | 0 |

| Intersection | |
|---|---|
| Intersection Delay, s/veh | 9.7 |
| Intersection LOS | A |

| Approach | EB | WB | SB |
|---|---|---|---|
| Entry Lanes | 1 | 1 | 1 |
| Conflicting Circle Lanes | 1 | 1 | 1 |
| Adj Approach Flow, veh/h | 811 | 654 | 137 |
| Demand Flow Rate, veh/h | 827 | 667 | 139 |
| Vehicles Circulating, veh/h | 75 | 65 | 546 |
| Vehicles Exiting, veh/h | 610 | 837 | 186 |
| Ped Vol Crossing Leg, #/h | 0 | 0 | 0 |
| Ped Cap Adj | 1.000 | 1.000 | 1.000 |
| Approach Delay, s/veh | 11.2 | 8.4 | 6.5 |
| Approach LOS | B | A | A |

| Lane | Left | Left | Left |
|---|---|---|---|
| Designated Moves | LT | TR | LR |
| Assumed Moves | LT | TR | LR |
| RT Channelized | | | |
| Lane Util | 1.000 | 1.000 | 1.000 |
| Follow-Up Headway, s | 2.609 | 2.609 | 2.609 |
| Critical Headway, s | 4.976 | 4.976 | 4.976 |
| Entry Flow, veh/h | 827 | 667 | 139 |
| Cap Entry Lane, veh/h | 1278 | 1291 | 791 |
| Entry HV Adj Factor | 0.981 | 0.981 | 0.986 |
| Flow Entry, veh/h | 811 | 654 | 137 |
| Cap Entry, veh/h | 1254 | 1267 | 779 |
| V/C Ratio | 0.647 | 0.517 | 0.176 |
| Control Delay, s/veh | 11.2 | 8.4 | 6.5 |
| LOS | B | A | A |
| 95th %tile Queue, veh | 5 | 3 | 1 |

| Intersection | |
|---|---|
| Intersection Delay, s/veh | 3.6 |
| Intersection LOS | A |

| Approach | EB | WB | SB |
|---|---|---|---|
| Entry Lanes | 1 | 1 | 1 |
| Conflicting Circle Lanes | 1 | 1 | 1 |
| Adj Approach Flow, veh/h | 166 | 144 | 47 |
| Demand Flow Rate, veh/h | 169 | 147 | 48 |
| Vehicles Circulating, veh/h | 25 | 20 | 110 |
| Vehicles Exiting, veh/h | 132 | 174 | 57 |
| Ped Vol Crossing Leg, #/h | 0 | 0 | 0 |
| Ped Cap Adj | 1.000 | 1.000 | 1.000 |
| Approach Delay, s/veh | 3.7 | 3.6 | 3.3 |
| Approach LOS | A | A | A |

| Lane | Left | Left | Left |
|---|---|---|---|
| Designated Moves | LT | TR | LR |
| Assumed Moves | LT | TR | LR |
| RT Channelized | | | |
| Lane Util | 1.000 | 1.000 | 1.000 |
| Follow-Up Headway, s | 2.609 | 2.609 | 2.609 |
| Critical Headway, s | 4.976 | 4.976 | 4.976 |
| Entry Flow, veh/h | 169 | 147 | 48 |
| Cap Entry Lane, veh/h | 1345 | 1352 | 1233 |
| Entry HV Adj Factor | 0.983 | 0.979 | 0.979 |
| Flow Entry, veh/h | 166 | 144 | 47 |
| Cap Entry, veh/h | 1322 | 1323 | 1208 |
| V/C Ratio | 0.126 | 0.109 | 0.039 |
| Control Delay, s/veh | 3.7 | 3.6 | 3.3 |
| LOS | A | A | A |
| 95th %tile Queue, veh | 0 | 0 | 0 |

| Intersection | |
|---|---|
| Intersection Delay, s/veh | 5.7 |
| Intersection LOS | A |

| Approach | EB | WB | SB |
|---|---|---|---|
| Entry Lanes | 1 | 1 | 1 |
| Conflicting Circle Lanes | 1 | 1 | 1 |
| Adj Approach Flow, veh/h | 347 | 472 | 94 |
| Demand Flow Rate, veh/h | 354 | 481 | 96 |
| Vehicles Circulating, veh/h | 40 | 50 | 420 |
| Vehicles Exiting, veh/h | 476 | 344 | 111 |
| Ped Vol Crossing Leg, #/h | 0 | 0 | 0 |
| Ped Cap Adj | 1.000 | 1.000 | 1.000 |
| Approach Delay, s/veh | 5.1 | 6.2 | 5.1 |
| Approach LOS | A | A | A |

| Lane | Left | Left | Left |
|---|---|---|---|
| Designated Moves | LT | TR | LR |
| Assumed Moves | LT | TR | LR |
| RT Channelized | | | |
| Lane Util | 1.000 | 1.000 | 1.000 |
| Follow-Up Headway, s | 2.609 | 2.609 | 2.609 |
| Critical Headway, s | 4.976 | 4.976 | 4.976 |
| Entry Flow, veh/h | 354 | 481 | 96 |
| Cap Entry Lane, veh/h | 1325 | 1311 | 899 |
| Entry HV Adj Factor | 0.980 | 0.981 | 0.979 |
| Flow Entry, veh/h | 347 | 472 | 94 |
| Cap Entry, veh/h | 1299 | 1286 | 880 |
| V/C Ratio | 0.267 | 0.367 | 0.107 |
| Control Delay, s/veh | 5.1 | 6.2 | 5.1 |
| LOS | A | A | A |
| 95th %tile Queue, veh | 1 | 2 | 0 |

| Intersection | |
|---|---|
| Intersection Delay, s/veh | 9.7 |
| Intersection LOS | A |

| Approach | EB | WB | SB |
|---|---|---|---|
| Entry Lanes | 1 | 1 | 1 |
| Conflicting Circle Lanes | 1 | 1 | 1 |
| Adj Approach Flow, veh/h | 618 | 838 | 122 |
| Demand Flow Rate, veh/h | 630 | 855 | 124 |
| Vehicles Circulating, veh/h | 68 | 50 | 766 |
| Vehicles Exiting, veh/h | 822 | 648 | 139 |
| Ped Vol Crossing Leg, #/h | 0 | 0 | 0 |
| Ped Cap Adj | 1.000 | 1.000 | 1.000 |
| Approach Delay, s/veh | 8.0 | 11.1 | 8.2 |
| Approach LOS | A | B | A |

| Lane | Left | Left | Left |
|---|---|---|---|
| Designated Moves | LT | TR | LR |
| Assumed Moves | LT | TR | LR |
| RT Channelized | | | |
| Lane Util | 1.000 | 1.000 | 1.000 |
| Follow-Up Headway, s | 2.609 | 2.609 | 2.609 |
| Critical Headway, s | 4.976 | 4.976 | 4.976 |
| Entry Flow, veh/h | 630 | 855 | 124 |
| Cap Entry Lane, veh/h | 1287 | 1311 | 632 |
| Entry HV Adj Factor | 0.980 | 0.980 | 0.984 |
| Flow Entry, veh/h | 618 | 838 | 122 |
| Cap Entry, veh/h | 1262 | 1285 | 622 |
| V/C Ratio | 0.489 | 0.652 | 0.196 |
| Control Delay, s/veh | 8.0 | 11.1 | 8.2 |
| LOS | A | B | A |
| 95th %tile Queue, veh | 3 | 5 | 1 |

| Intersection | |
|---|---|
| Intersection Delay, s/veh | 3.5 |
| Intersection LOS | A |

| Approach | EB | WB | NB | SB |
|---|---|---|---|---|
| Entry Lanes | 1 | 1 | 1 | 1 |
| Conflicting Circle Lanes | 1 | 1 | 1 | 1 |
| Adj Approach Flow, veh/h | 104 | 134 | 0 | 79 |
| Demand Flow Rate, veh/h | 106 | 136 | 0 | 81 |
| Vehicles Circulating, veh/h | 49 | 19 | 155 | 112 |
| Vehicles Exiting, veh/h | 144 | 136 | 0 | 43 |
| Ped Vol Crossing Leg, #/h | 0 | 0 | 0 | 0 |
| Ped Cap Adj | 1.000 | 1.000 | 1.000 | 1.000 |
| Approach Delay, s/veh | 3.4 | 3.5 | 0.0 | 3.5 |
| Approach LOS | A | A | - | A |

| Lane | Left | Left | Left | Left |
|---|---|---|---|---|
| Designated Moves | LTR | LTR | LTR | LTR |
| Assumed Moves | LTR | LTR | LTR | LTR |
| RT Channelized | | | | |
| Lane Util | 1.000 | 1.000 | 1.000 | 1.000 |
| Follow-Up Headway, s | 2.609 | 2.609 | 2.609 | 2.609 |
| Critical Headway, s | 4.976 | 4.976 | 4.976 | 4.976 |
| Entry Flow, veh/h | 106 | 136 | 0 | 81 |
| Cap Entry Lane, veh/h | 1313 | 1353 | 1178 | 1231 |
| Entry HV Adj Factor | 0.984 | 0.984 | 1.000 | 0.975 |
| Flow Entry, veh/h | 104 | 134 | 0 | 79 |
| Cap Entry, veh/h | 1291 | 1332 | 1178 | 1201 |
| V/C Ratio | 0.081 | 0.100 | 0.000 | 0.066 |
| Control Delay, s/veh | 3.4 | 3.5 | 3.1 | 3.5 |
| LOS | A | A | A | A |
| 95th %tile Queue, veh | 0 | 0 | 0 | 0 |

| Intersection | |
|---|---|
| Intersection Delay, s/veh | 5.8 |
| Intersection LOS | A |

| Approach | EB | WB | NB | SB |
|---|---|---|---|---|
| Entry Lanes | 1 | 1 | 1 | 1 |
| Conflicting Circle Lanes | 1 | 1 | 1 | 1 |
| Adj Approach Flow, veh/h | 426 | 332 | 47 | 102 |
| Demand Flow Rate, veh/h | 434 | 339 | 48 | 104 |
| Vehicles Circulating, veh/h | 145 | 59 | 334 | 349 |
| Vehicles Exiting, veh/h | 308 | 323 | 245 | 48 |
| Ped Vol Crossing Leg, #/h | 0 | 0 | 0 | 0 |
| Ped Cap Adj | 1.000 | 1.000 | 1.000 | 1.000 |
| Approach Delay, s/veh | 6.7 | 5.1 | 4.2 | 4.8 |
| Approach LOS | A | A | A | A |

| Lane | Left | Left | Left | Left |
|---|---|---|---|---|
| Designated Moves | LTR | LTR | LTR | LTR |
| Assumed Moves | LTR | LTR | LTR | LTR |
| RT Channelized | | | | |
| Lane Util | 1.000 | 1.000 | 1.000 | 1.000 |
| Follow-Up Headway, s | 2.609 | 2.609 | 2.609 | 2.609 |
| Critical Headway, s | 4.976 | 4.976 | 4.976 | 4.976 |
| Entry Flow, veh/h | 434 | 339 | 48 | 104 |
| Cap Entry Lane, veh/h | 1190 | 1299 | 982 | 967 |
| Entry HV Adj Factor | 0.981 | 0.980 | 0.978 | 0.978 |
| Flow Entry, veh/h | 426 | 332 | 47 | 102 |
| Cap Entry, veh/h | 1168 | 1274 | 960 | 945 |
| V/C Ratio | 0.365 | 0.261 | 0.049 | 0.108 |
| Control Delay, s/veh | 6.7 | 5.1 | 4.2 | 4.8 |
| LOS | A | A | A | A |
| 95th %tile Queue, veh | 2 | 1 | 0 | 0 |

| Intersection | |
|---|---|
| Intersection Delay, s/veh | 9.4 |
| Intersection LOS | A |

| Approach | EB | WB | NB | SB |
|---|---|---|---|---|
| Entry Lanes | 1 | 1 | 1 | 1 |
| Conflicting Circle Lanes | 1 | 1 | 1 | 1 |
| Adj Approach Flow, veh/h | 699 | 489 | 187 | 103 |
| Demand Flow Rate, veh/h | 712 | 499 | 191 | 105 |
| Vehicles Circulating, veh/h | 198 | 176 | 438 | 624 |
| Vehicles Exiting, veh/h | 531 | 453 | 472 | 51 |
| Ped Vol Crossing Leg, #/h | 0 | 0 | 0 | 0 |
| Ped Cap Adj | 1.000 | 1.000 | 1.000 | 1.000 |
| Approach Delay, s/veh | 11.8 | 7.8 | 6.4 | 6.6 |
| Approach LOS | B | A | A | A |

| Lane | Left | Left | Left | Left |
|---|---|---|---|---|
| Designated Moves | LTR | LTR | LTR | LTR |
| Assumed Moves | LTR | LTR | LTR | LTR |
| RT Channelized | | | | |
| Lane Util | 1.000 | 1.000 | 1.000 | 1.000 |
| Follow-Up Headway, s | 2.609 | 2.609 | 2.609 | 2.609 |
| Critical Headway, s | 4.976 | 4.976 | 4.976 | 4.976 |
| Entry Flow, veh/h | 712 | 499 | 191 | 105 |
| Cap Entry Lane, veh/h | 1128 | 1153 | 883 | 730 |
| Entry HV Adj Factor | 0.982 | 0.980 | 0.979 | 0.978 |
| Flow Entry, veh/h | 699 | 489 | 187 | 103 |
| Cap Entry, veh/h | 1107 | 1131 | 864 | 714 |
| V/C Ratio | 0.631 | 0.433 | 0.216 | 0.144 |
| Control Delay, s/veh | 11.8 | 7.8 | 6.4 | 6.6 |
| LOS | B | A | A | A |
| 95th %tile Queue, veh | 5 | 2 | 1 | 1 |

| Intersection | |
|---|---|
| Intersection Delay, s/veh | 3.6 |
| Intersection LOS | A |

| Approach | EB | WB | NB | SB |
|---|---|---|---|---|
| Entry Lanes | 1 | 1 | 1 | 1 |
| Conflicting Circle Lanes | 1 | 1 | 1 | 1 |
| Adj Approach Flow, veh/h | 152 | 136 | 0 | 47 |
| Demand Flow Rate, veh/h | 155 | 139 | 0 | 48 |
| Vehicles Circulating, veh/h | 30 | 33 | 185 | 100 |
| Vehicles Exiting, veh/h | 118 | 152 | 0 | 72 |
| Ped Vol Crossing Leg, #/h | 0 | 0 | 0 | 0 |
| Ped Cap Adj | 1.000 | 1.000 | 1.000 | 1.000 |
| Approach Delay, s/veh | 3.7 | 3.6 | 0.0 | 3.3 |
| Approach LOS | A | A | - | A |

| Lane | Left | Left | Left | Left |
|---|---|---|---|---|
| Designated Moves | LTR | LTR | LTR | LTR |
| Assumed Moves | LTR | LTR | LTR | LTR |
| RT Channelized | | | | |
| Lane Util | 1.000 | 1.000 | 1.000 | 1.000 |
| Follow-Up Headway, s | 2.609 | 2.609 | 2.609 | 2.609 |
| Critical Headway, s | 4.976 | 4.976 | 4.976 | 4.976 |
| Entry Flow, veh/h | 155 | 139 | 0 | 48 |
| Cap Entry Lane, veh/h | 1338 | 1334 | 1143 | 1246 |
| Entry HV Adj Factor | 0.978 | 0.979 | 1.000 | 0.979 |
| Flow Entry, veh/h | 152 | 136 | 0 | 47 |
| Cap Entry, veh/h | 1309 | 1306 | 1143 | 1220 |
| V/C Ratio | 0.116 | 0.104 | 0.000 | 0.039 |
| Control Delay, s/veh | 3.7 | 3.6 | 3.2 | 3.3 |
| LOS | A | A | A | A |
| 95th %tile Queue, veh | 0 | 0 | 0 | 0 |

| Intersection | |
|---|---|
| Intersection Delay, s/veh | 5.9 |
| Intersection LOS | A |

| Approach | EB | WB | NB | SB |
|---|---|---|---|---|
| Entry Lanes | 1 | 1 | 1 | 1 |
| Conflicting Circle Lanes | 1 | 1 | 1 | 1 |
| Adj Approach Flow, veh/h | 342 | 352 | 220 | 59 |
| Demand Flow Rate, veh/h | 349 | 360 | 224 | 60 |
| Vehicles Circulating, veh/h | 73 | 244 | 308 | 508 |
| Vehicles Exiting, veh/h | 495 | 288 | 114 | 96 |
| Ped Vol Crossing Leg, #/h | 0 | 0 | 0 | 0 |
| Ped Cap Adj | 1.000 | 1.000 | 1.000 | 1.000 |
| Approach Delay, s/veh | 5.3 | 6.8 | 5.8 | 5.2 |
| Approach LOS | A | A | A | A |

| Lane | Left | Left | Left | Left |
|---|---|---|---|---|
| Designated Moves | LTR | LTR | LTR | LTR |
| Assumed Moves | LTR | LTR | LTR | LTR |
| RT Channelized | | | | |
| Lane Util | 1.000 | 1.000 | 1.000 | 1.000 |
| Follow-Up Headway, s | 2.609 | 2.609 | 2.609 | 2.609 |
| Critical Headway, s | 4.976 | 4.976 | 4.976 | 4.976 |
| Entry Flow, veh/h | 349 | 360 | 224 | 60 |
| Cap Entry Lane, veh/h | 1281 | 1076 | 1008 | 822 |
| Entry HV Adj Factor | 0.981 | 0.979 | 0.980 | 0.981 |
| Flow Entry, veh/h | 342 | 352 | 220 | 59 |
| Cap Entry, veh/h | 1256 | 1053 | 988 | 806 |
| V/C Ratio | 0.272 | 0.335 | 0.222 | 0.073 |
| Control Delay, s/veh | 5.3 | 6.8 | 5.8 | 5.2 |
| LOS | A | A | A | A |
| 95th %tile Queue, veh | 1 | 1 | 1 | 0 |

| Intersection | |
|---|---|
| Intersection Delay, s/veh | 11.4 |
| Intersection LOS | B |

| Approach | EB | WB | NB | SB |
|---|---|---|---|---|
| Entry Lanes | 1 | 1 | 1 | 1 |
| Conflicting Circle Lanes | 1 | 1 | 1 | 1 |
| Adj Approach Flow, veh/h | 611 | 465 | 501 | 61 |
| Demand Flow Rate, veh/h | 623 | 474 | 511 | 62 |
| Vehicles Circulating, veh/h | 102 | 495 | 491 | 870 |
| Vehicles Exiting, veh/h | 830 | 507 | 234 | 99 |
| Ped Vol Crossing Leg, #/h | 0 | 0 | 0 | 0 |
| Ped Cap Adj | 1.000 | 1.000 | 1.000 | 1.000 |
| Approach Delay, s/veh | 8.4 | 12.9 | 14.1 | 7.8 |
| Approach LOS | A | B | B | A |

| Lane | Left | Left | Left | Left |
|---|---|---|---|---|
| Designated Moves | LTR | LTR | LTR | LTR |
| Assumed Moves | LTR | LTR | LTR | LTR |
| RT Channelized | | | | |
| Lane Util | 1.000 | 1.000 | 1.000 | 1.000 |
| Follow-Up Headway, s | 2.609 | 2.609 | 2.609 | 2.609 |
| Critical Headway, s | 4.976 | 4.976 | 4.976 | 4.976 |
| Entry Flow, veh/h | 623 | 474 | 511 | 62 |
| Cap Entry Lane, veh/h | 1244 | 833 | 836 | 568 |
| Entry HV Adj Factor | 0.980 | 0.980 | 0.980 | 0.981 |
| Flow Entry, veh/h | 611 | 465 | 501 | 61 |
| Cap Entry, veh/h | 1219 | 816 | 819 | 558 |
| V/C Ratio | 0.501 | 0.569 | 0.611 | 0.109 |
| Control Delay, s/veh | 8.4 | 12.9 | 14.1 | 7.8 |
| LOS | A | B | B | A |
| 95th %tile Queue, veh | 3 | 4 | 4 | 0 |

| Intersection | |
|---|---|
| Int Delay, s/veh | 0.2 |

| Movement | EBT | EBR | WBL | WBT | NBL | NBR |
|---|---|---|---|---|---|---|
| Lane Configurations | ↑ | ↱ | | ↑ | | ↱ |
| Traffic Vol, veh/h | 311 | 82 | 0 | 454 | 0 | 21 |
| Future Vol, veh/h | 311 | 82 | 0 | 454 | 0 | 21 |
| Conflicting Peds, #/hr | 0 | 0 | 0 | 0 | 0 | 0 |
| Sign Control | Free | Free | Free | Free | Stop | Stop |
| RT Channelized | - | None | - | None | - | None |
| Storage Length | - | 0 | - | - | - | 0 |
| Veh in Median Storage, # | 0 | - | - | 0 | 0 | - |
| Grade, % | 0 | - | - | 0 | 0 | - |
| Peak Hour Factor | 90 | 90 | 90 | 90 | 90 | 90 |
| Heavy Vehicles, % | 2 | 2 | 2 | 2 | 2 | 2 |
| Mvmt Flow | 346 | 91 | 0 | 504 | 0 | 23 |

| Major/Minor | Major1 | | Major2 | | Minor1 | |
|---|---|---|---|---|---|---|
| Conflicting Flow All | 0 | 0 | - | - | - | 346 |
| Stage 1 | - | - | - | - | - | - |
| Stage 2 | - | - | - | - | - | - |
| Critical Hdwy | - | - | - | - | - | 6.22 |
| Critical Hdwy Stg 1 | - | - | - | - | - | - |
| Critical Hdwy Stg 2 | - | - | - | - | - | - |
| Follow-up Hdwy | - | - | - | - | - | 3.318 |
| Pot Cap-1 Maneuver | - | - | 0 | - | 0 | 697 |
| Stage 1 | - | - | 0 | - | 0 | - |
| Stage 2 | - | - | 0 | - | 0 | - |
| Platoon blocked, % | - | - | | - | | |
| Mov Cap-1 Maneuver | - | - | - | - | - | 697 |
| Mov Cap-2 Maneuver | - | - | - | - | - | - |
| Stage 1 | - | - | - | - | - | - |
| Stage 2 | - | - | - | - | - | - |

| Approach | EB | WB | NB |
|---|---|---|---|
| HCM Control Delay, s | 0 | 0 | 10.3 |
| HCM LOS | | | B |

| Minor Lane/Major Mvmt | NBLn1 | EBT | EBR | WBT |
|---|---|---|---|---|
| Capacity (veh/h) | 697 | - | - | - |
| HCM Lane V/C Ratio | 0.033 | - | - | - |
| HCM Control Delay (s) | 10.3 | - | - | - |
| HCM Lane LOS | B | - | - | - |
| HCM 95th %tile Q(veh) | 0.1 | - | - | - |

| Intersection | |
|---|---|
| Int Delay, s/veh | 0.8 |

| Movement | EBT | EBR | WBL | WBT | NBL | NBR |
|---|---|---|---|---|---|---|
| Lane Configurations | ↑ | ↱ | | ↑ | | ↱ |
| Traffic Vol, veh/h | 254 | 12 | 0 | 335 | 0 | 52 |
| Future Vol, veh/h | 254 | 12 | 0 | 335 | 0 | 52 |
| Conflicting Peds, #/hr | 0 | 0 | 0 | 0 | 0 | 0 |
| Sign Control | Free | Free | Free | Free | Stop | Stop |
| RT Channelized | - | None | - | None | - | None |
| Storage Length | - | 0 | - | - | - | 0 |
| Veh in Median Storage, # | 0 | - | - | 0 | 0 | - |
| Grade, % | 0 | - | - | 0 | 0 | - |
| Peak Hour Factor | 90 | 90 | 90 | 90 | 90 | 90 |
| Heavy Vehicles, % | 2 | 2 | 2 | 2 | 2 | 2 |
| Mvmt Flow | 282 | 13 | 0 | 372 | 0 | 58 |

| Major/Minor | Major1 | | Major2 | | Minor1 | |
|---|---|---|---|---|---|---|
| Conflicting Flow All | 0 | 0 | - | - | - | 282 |
| Stage 1 | - | - | - | - | - | - |
| Stage 2 | - | - | - | - | - | - |
| Critical Hdwy | - | - | - | - | - | 6.22 |
| Critical Hdwy Stg 1 | - | - | - | - | - | - |
| Critical Hdwy Stg 2 | - | - | - | - | - | - |
| Follow-up Hdwy | - | - | - | - | - | 3.318 |
| Pot Cap-1 Maneuver | - | - | 0 | - | 0 | 757 |
| Stage 1 | - | - | 0 | - | 0 | - |
| Stage 2 | - | - | 0 | - | 0 | - |
| Platoon blocked, % | - | - | | - | | |
| Mov Cap-1 Maneuver | - | - | - | - | - | 757 |
| Mov Cap-2 Maneuver | - | - | - | - | - | - |
| Stage 1 | - | - | - | - | - | - |
| Stage 2 | - | - | - | - | - | - |

| Approach | EB | WB | NB |
|---|---|---|---|
| HCM Control Delay, s | 0 | 0 | 10.1 |
| HCM LOS | | | B |

| Minor Lane/Major Mvmt | NBLn1 | EBT | EBR | WBT |
|---|---|---|---|---|
| Capacity (veh/h) | 757 | - | - | - |
| HCM Lane V/C Ratio | 0.076 | - | - | - |
| HCM Control Delay (s) | 10.1 | - | - | - |
| HCM Lane LOS | B | - | - | - |
| HCM 95th %tile Q(veh) | 0.2 | - | - | - |

| Lane Group | EBL | EBT | EBR | WBL | WBT | WBR | NBL | NBT | SBL | SBT | SBR |
|---|---|---|---|---|---|---|---|---|---|---|---|
| Lane Configurations | | | | | | | | | | | |
| Traffic Volume (vph) | 435 | 125 | 92 | 218 | 78 | 54 | 91 | 1479 | 50 | 920 | 189 |
| Future Volume (vph) | 435 | 125 | 92 | 218 | 78 | 54 | 91 | 1479 | 50 | 920 | 189 |
| Turn Type | pm+pt | NA | Free | pm+pt | NA | Perm | pm+pt | NA | pm+pt | NA | Free |
| Protected Phases | 7 | 4 | | 3 | 8 | | 5 | 2 | 1 | 6 | |
| Permitted Phases | 4 | | Free | 8 | | 8 | 2 | | 6 | | Free |
| Detector Phase | 7 | 4 | | 3 | 8 | 8 | 5 | 2 | 1 | 6 | |
| Switch Phase | | | | | | | | | | | |
| Minimum Initial (s) | 30.0 | 25.0 | | 20.0 | 15.0 | 15.0 | 15.0 | 30.0 | 15.0 | 30.0 | |
| Minimum Split (s) | 35.0 | 45.0 | | 35.0 | 30.0 | 30.0 | 30.0 | 35.0 | 20.0 | 35.0 | |
| Total Split (s) | 40.0 | 50.0 | | 40.0 | 50.0 | 50.0 | 35.0 | 50.0 | 25.0 | 40.0 | |
| Total Split (%) | 24.2% | 30.3% | | 24.2% | 30.3% | 30.3% | 21.2% | 30.3% | 15.2% | 24.2% | |
| Yellow Time (s) | 4.0 | 4.0 | | 4.0 | 4.0 | 4.0 | 4.0 | 4.0 | 4.0 | 4.0 | |
| All-Red Time (s) | 1.0 | 1.0 | | 1.0 | 1.0 | 1.0 | 1.0 | 1.0 | 1.0 | 1.0 | |
| Lost Time Adjust (s) | 0.0 | 0.0 | | 0.0 | 0.0 | 0.0 | 0.0 | 0.0 | 0.0 | 0.0 | |
| Total Lost Time (s) | 5.0 | 5.0 | | 5.0 | 5.0 | 5.0 | 5.0 | 5.0 | 5.0 | 5.0 | |
| Lead/Lag | Lead | Lag | | Lead | Lag | Lag | Lead | Lag | Lead | Lag | |
| Lead-Lag Optimize? | | | | | | | | | | | |
| Recall Mode | None | None | | None | None | None | None | C-Max | None | C-Max | |

**Intersection Summary**

Cycle Length: 165
Actuated Cycle Length: 165
Offset: 0 (0%), Referenced to phase 2:NBTL and 6:SBTL, Start of Green
Natural Cycle: 145
Control Type: Actuated-Coordinated

Splits and Phases: 1: Cerrillos Rd. & Beckner Rd.

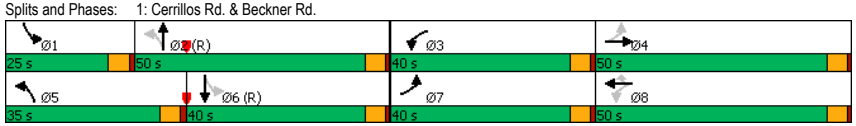






| Movement | EBL | EBT | EBR | WBL | WBT | WBR | NBL | NBT | NBR | SBL | SBT | SBR |
|---|---|---|---|---|---|---|---|---|---|---|---|---|
| Lane Configurations | | | | | | | | | | | | |
| Traffic Volume (veh/h) | 435 | 125 | 92 | 218 | 78 | 54 | 91 | 1479 | 298 | 50 | 920 | 189 |
| Future Volume (veh/h) | 435 | 125 | 92 | 218 | 78 | 54 | 91 | 1479 | 298 | 50 | 920 | 189 |
| Initial Q (Qb), veh | 0 | 0 | 0 | 0 | 0 | 0 | 0 | 0 | 0 | 0 | 0 | 0 |
| Ped-Bike Adj(A_pbT) | 1.00 | | 1.00 | 1.00 | | 1.00 | 1.00 | | 1.00 | 1.00 | | 1.00 |
| Parking Bus, Adj | 1.00 | 1.00 | 1.00 | 1.00 | 1.00 | 1.00 | 1.00 | 1.00 | 1.00 | 1.00 | 1.00 | 1.00 |
| Work Zone On Approach | | No | | | No | | | No | | | No | |
| Adj Sat Flow, veh/h/ln | 1870 | 1870 | 1870 | 1870 | 1870 | 1870 | 1870 | 1870 | 1870 | 1870 | 1870 | 1870 |
| Adj Flow Rate, veh/h | 506 | 145 | 0 | 253 | 91 | 63 | 106 | 1720 | 347 | 58 | 1070 | 0 |
| Peak Hour Factor | 0.86 | 0.86 | 0.86 | 0.86 | 0.86 | 0.86 | 0.86 | 0.86 | 0.86 | 0.86 | 0.86 | 0.86 |
| Percent Heavy Veh, % | 2 | 2 | 2 | 2 | 2 | 2 | 2 | 2 | 2 | 2 | 2 | 2 |
| Cap, veh/h | 476 | 301 | | 409 | 170 | 144 | 367 | 2097 | 418 | 223 | 1726 | |
| Arrive On Green | 0.21 | 0.16 | 0.00 | 0.14 | 0.09 | 0.09 | 0.09 | 0.49 | 0.49 | 0.11 | 0.65 | 0.00 |
| Sat Flow, veh/h | 1781 | 1870 | 1585 | 1781 | 1870 | 1585 | 1781 | 4270 | 852 | 1781 | 3554 | 1585 |
| Grp Volume(v), veh/h | 506 | 145 | 0 | 253 | 91 | 63 | 106 | 1367 | 700 | 58 | 1070 | 0 |
| Grp Sat Flow(s),veh/h/ln | 1781 | 1870 | 1585 | 1781 | 1870 | 1585 | 1781 | 1702 | 1717 | 1781 | 1777 | 1585 |
| Q Serve(g_s), s | 35.0 | 11.6 | 0.0 | 20.9 | 7.7 | 6.2 | 4.4 | 56.4 | 57.7 | 2.3 | 29.4 | 0.0 |
| Cycle Q Clear(g_c), s | 35.0 | 11.6 | 0.0 | 20.9 | 7.7 | 6.2 | 4.4 | 56.4 | 57.7 | 2.3 | 29.4 | 0.0 |
| Prop In Lane | 1.00 | | 1.00 | 1.00 | | 1.00 | 1.00 | | 0.50 | 1.00 | | 1.00 |
| Lane Grp Cap(c), veh/h | 476 | 301 | | 409 | 170 | 144 | 367 | 1672 | 843 | 223 | 1726 | |
| V/C Ratio(X) | 1.06 | 0.48 | | 0.62 | 0.54 | 0.44 | 0.29 | 0.82 | 0.83 | 0.26 | 0.62 | |
| Avail Cap(c_a), veh/h | 476 | 510 | | 534 | 510 | 432 | 530 | 1672 | 843 | 288 | 1726 | |
| HCM Platoon Ratio | 1.00 | 1.00 | 1.00 | 1.00 | 1.00 | 1.00 | 1.00 | 1.00 | 1.00 | 1.33 | 1.33 | 1.33 |
| Upstream Filter(I) | 1.00 | 1.00 | 0.00 | 1.00 | 1.00 | 1.00 | 1.00 | 1.00 | 1.00 | 0.73 | 0.73 | 0.00 |
| Uniform Delay (d), s/veh | 54.7 | 63.0 | 0.0 | 56.5 | 71.7 | 71.0 | 19.1 | 35.7 | 36.0 | 28.4 | 20.2 | 0.0 |
| Incr Delay (d2), s/veh | 58.8 | 1.2 | 0.0 | 1.5 | 2.6 | 2.1 | 0.4 | 4.6 | 9.3 | 0.4 | 1.2 | 0.0 |
| Initial Q Delay(d3),s/veh | 0.0 | 0.0 | 0.0 | 0.0 | 0.0 | 0.0 | 0.0 | 0.0 | 0.0 | 0.0 | 0.0 | 0.0 |
| %ile BackOfQ(95%),veh/ln | 16.4 | 9.5 | 0.0 | 14.5 | 6.8 | 4.6 | 3.3 | 31.6 | 33.8 | 1.8 | 15.1 | 0.0 |
| Unsig. Movement Delay, s/veh | | | | | | | | | | | | |
| LnGrp Delay(d),s/veh | 113.5 | 64.2 | 0.0 | 58.1 | 74.3 | 73.1 | 19.5 | 40.3 | 45.3 | 28.9 | 21.5 | 0.0 |
| LnGrp LOS | F | E | | E | E | E | B | D | D | C | C | |
| Approach Vol, veh/h | | 651 | | | 407 | | | 2173 | | | 1128 | |
| Approach Delay, s/veh | | 102.5 | | | 64.0 | | | 40.9 | | | 21.8 | |
| Approach LOS | | F | | | E | | | D | | | C | |

| Timer - Assigned Phs | 1 | 2 | 3 | 4 | 5 | 6 | 7 | 8 |
|---|---|---|---|---|---|---|---|---|
| Phs Duration (G+Y+Rc), s | 18.9 | 86.1 | 28.5 | 31.5 | 19.9 | 85.1 | 40.0 | 20.0 |
| Change Period (Y+Rc), s | 5.0 | 5.0 | 5.0 | 5.0 | 5.0 | 5.0 | 5.0 | 5.0 |
| Max Green Setting (Gmax), s | 20.0 | 45.0 | 35.0 | 45.0 | 30.0 | 35.0 | 35.0 | 45.0 |
| Max Q Clear Time (g_c+I1), s | 4.3 | 59.7 | 22.9 | 13.6 | 6.4 | 31.4 | 37.0 | 9.7 |
| Green Ext Time (p_c), s | 0.1 | 0.0 | 0.5 | 0.7 | 0.2 | 2.2 | 0.0 | 0.6 |

| Intersection Summary | |
|---|---|
| HCM 6th Ctrl Delay | 47.3 |
| HCM 6th LOS | D |

**Notes**

Unsignalized Delay for [EBR, SBR] is excluded from calculations of the approach delay and intersection delay.

| Lane Group | EBL | EBT | EBR | WBL | WBT | WBR | NBL | NBT | SBL | SBT | SBR |
|---|---|---|---|---|---|---|---|---|---|---|---|
| Lane Configurations | | | | | | | | | | | |
| Traffic Volume (vph) | 435 | 125 | 92 | 218 | 78 | 54 | 91 | 1479 | 50 | 920 | 189 |
| Future Volume (vph) | 435 | 125 | 92 | 218 | 78 | 54 | 91 | 1479 | 50 | 920 | 189 |
| Turn Type | Prot | NA | Free | Prot | NA | pm+ov | pm+pt | NA | pm+pt | NA | Free |
| Protected Phases | 7 | 4 | | 3 | 8 | 1 | 5 | 2 | 1 | 6 | |
| Permitted Phases | | | Free | | | 8 | 2 | | 6 | | Free |
| Detector Phase | 7 | 4 | | 3 | 8 | 1 | 5 | 2 | 1 | 6 | |
| Switch Phase | | | | | | | | | | | |
| Minimum Initial (s) | 30.0 | 25.0 | | 20.0 | 15.0 | 15.0 | 15.0 | 30.0 | 15.0 | 30.0 | |
| Minimum Split (s) | 35.0 | 45.0 | | 35.0 | 30.0 | 20.0 | 30.0 | 35.0 | 20.0 | 35.0 | |
| Total Split (s) | 35.0 | 45.0 | | 35.0 | 45.0 | 20.0 | 30.0 | 65.0 | 20.0 | 55.0 | |
| Total Split (%) | 21.2% | 27.3% | | 21.2% | 27.3% | 12.1% | 18.2% | 39.4% | 12.1% | 33.3% | |
| Yellow Time (s) | 4.0 | 4.0 | | 4.0 | 4.0 | 4.0 | 4.0 | 4.0 | 4.0 | 4.0 | |
| All-Red Time (s) | 1.0 | 1.0 | | 1.0 | 1.0 | 1.0 | 1.0 | 1.0 | 1.0 | 1.0 | |
| Lost Time Adjust (s) | 0.0 | 0.0 | | 0.0 | 0.0 | 0.0 | 0.0 | 0.0 | 0.0 | 0.0 | |
| Total Lost Time (s) | 5.0 | 5.0 | | 5.0 | 5.0 | 5.0 | 5.0 | 5.0 | 5.0 | 5.0 | |
| Lead/Lag | Lead | Lag | | Lead | Lag | Lead | Lead | Lag | Lead | Lag | |
| Lead-Lag Optimize? | | | | | | | | | | | |
| Recall Mode | None | None | | None | None | None | None | C-Max | None | C-Max | |

**Intersection Summary**

Cycle Length: 165
Actuated Cycle Length: 165
Offset: 0 (0%), Referenced to phase 2:NBTL and 6:SBTL, Start of Green
Natural Cycle: 145
Control Type: Actuated-Coordinated

Splits and Phases: 1: Cerrillos Rd. & Beckner Rd.

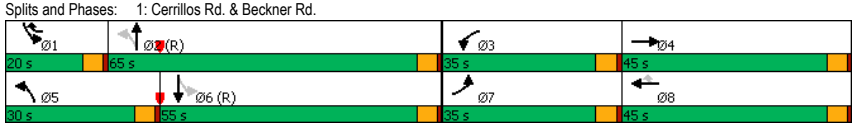






| Movement | EBL | EBT | EBR | WBL | WBT | WBR | NBL | NBT | NBR | SBL | SBT | SBR |
|---|---|---|---|---|---|---|---|---|---|---|---|---|
| Lane Configurations | | | | | | | | | | | | |
| Traffic Volume (veh/h) | 435 | 125 | 92 | 218 | 78 | 54 | 91 | 1479 | 298 | 50 | 920 | 189 |
| Future Volume (veh/h) | 435 | 125 | 92 | 218 | 78 | 54 | 91 | 1479 | 298 | 50 | 920 | 189 |
| Initial Q (Qb), veh | 0 | 0 | 0 | 0 | 0 | 0 | 0 | 0 | 0 | 0 | 0 | 0 |
| Ped-Bike Adj(A_pbT) | 1.00 | | 1.00 | 1.00 | | 1.00 | 1.00 | | 1.00 | 1.00 | | 1.00 |
| Parking Bus, Adj | 1.00 | 1.00 | 1.00 | 1.00 | 1.00 | 1.00 | 1.00 | 1.00 | 1.00 | 1.00 | 1.00 | 1.00 |
| Work Zone On Approach | | No | | | No | | | No | | | No | |
| Adj Sat Flow, veh/h/ln | 1870 | 1870 | 1870 | 1870 | 1870 | 1870 | 1870 | 1870 | 1870 | 1870 | 1870 | 1870 |
| Adj Flow Rate, veh/h | 506 | 145 | 0 | 253 | 91 | 63 | 106 | 1720 | 347 | 58 | 1070 | 0 |
| Peak Hour Factor | 0.86 | 0.86 | 0.86 | 0.86 | 0.86 | 0.86 | 0.86 | 0.86 | 0.86 | 0.86 | 0.86 | 0.86 |
| Percent Heavy Veh, % | 2 | 2 | 2 | 2 | 2 | 2 | 2 | 2 | 2 | 2 | 2 | 2 |
| Cap, veh/h | 628 | 283 | | 419 | 170 | 278 | 476 | 2227 | 444 | 233 | 1833 | |
| Arrive On Green | 0.18 | 0.15 | 0.00 | 0.12 | 0.09 | 0.09 | 0.09 | 0.52 | 0.52 | 0.17 | 1.00 | 0.00 |
| Sat Flow, veh/h | 3456 | 1870 | 1585 | 3456 | 1870 | 1585 | 1781 | 4270 | 852 | 1781 | 3554 | 1585 |
| Grp Volume(v), veh/h | 506 | 145 | 0 | 253 | 91 | 63 | 106 | 1367 | 700 | 58 | 1070 | 0 |
| Grp Sat Flow(s),veh/h/ln | 1728 | 1870 | 1585 | 1728 | 1870 | 1585 | 1781 | 1702 | 1717 | 1781 | 1777 | 1585 |
| Q Serve(g_s), s | 23.2 | 11.8 | 0.0 | 11.5 | 7.7 | 5.6 | 4.1 | 53.0 | 54.3 | 2.1 | 0.0 | 0.0 |
| Cycle Q Clear(g_c), s | 23.2 | 11.8 | 0.0 | 11.5 | 7.7 | 5.6 | 4.1 | 53.0 | 54.3 | 2.1 | 0.0 | 0.0 |
| Prop In Lane | 1.00 | | 1.00 | 1.00 | | 1.00 | 1.00 | | 0.50 | 1.00 | | 1.00 |
| Lane Grp Cap(c), veh/h | 628 | 283 | | 419 | 170 | 278 | 476 | 1775 | 895 | 233 | 1833 | |
| V/C Ratio(X) | 0.81 | 0.51 | | 0.60 | 0.54 | 0.23 | 0.22 | 0.77 | 0.78 | 0.25 | 0.58 | |
| Avail Cap(c_a), veh/h | 628 | 453 | | 628 | 453 | 518 | 586 | 1775 | 895 | 244 | 1833 | |
| HCM Platoon Ratio | 1.00 | 1.00 | 1.00 | 1.00 | 1.00 | 1.00 | 1.00 | 1.00 | 1.00 | 2.00 | 2.00 | 2.00 |
| Upstream Filter(I) | 1.00 | 1.00 | 0.00 | 1.00 | 1.00 | 1.00 | 1.00 | 1.00 | 1.00 | 0.78 | 0.78 | 0.00 |
| Uniform Delay (d), s/veh | 64.7 | 64.4 | 0.0 | 68.7 | 71.7 | 58.4 | 13.6 | 31.6 | 31.9 | 22.9 | 0.0 | 0.0 |
| Incr Delay (d2), s/veh | 7.6 | 1.4 | 0.0 | 1.4 | 2.6 | 0.4 | 0.2 | 3.3 | 6.7 | 0.4 | 1.1 | 0.0 |
| Initial Q Delay(d3),s/veh | 0.0 | 0.0 | 0.0 | 0.0 | 0.0 | 0.0 | 0.0 | 0.0 | 0.0 | 0.0 | 0.0 | 0.0 |
| %ile BackOfQ(95%),veh/ln | 16.1 | 9.6 | 0.0 | 8.8 | 6.8 | 4.1 | 3.0 | 29.5 | 31.3 | 1.5 | 0.5 | 0.0 |
| Unsig. Movement Delay, s/veh | | | | | | | | | | | | |
| LnGrp Delay(d),s/veh | 72.3 | 65.8 | 0.0 | 70.2 | 74.3 | 58.8 | 13.8 | 34.9 | 38.6 | 23.4 | 1.1 | 0.0 |
| LnGrp LOS | E | E | | E | E | E | B | C | D | C | A | |
| Approach Vol, veh/h | | 651 | | | 407 | | | 2173 | | | 1128 | |
| Approach Delay, s/veh | | 70.8 | | | 69.3 | | | 35.0 | | | 2.2 | |
| Approach LOS | | E | | | E | | | D | | | A | |

| Timer - Assigned Phs | 1 | 2 | 3 | 4 | 5 | 6 | 7 | 8 |
|---|---|---|---|---|---|---|---|---|
| Phs Duration (G+Y+Rc), s | 18.9 | 91.1 | 25.0 | 30.0 | 19.9 | 90.1 | 35.0 | 20.0 |
| Change Period (Y+Rc), s | 5.0 | 5.0 | 5.0 | 5.0 | 5.0 | 5.0 | 5.0 | 5.0 |
| Max Green Setting (Gmax), s | 15.0 | 60.0 | 30.0 | 40.0 | 25.0 | 50.0 | 30.0 | 40.0 |
| Max Q Clear Time (g_c+I1), s | 4.1 | 56.3 | 13.5 | 13.8 | 6.1 | 2.0 | 25.2 | 9.7 |
| Green Ext Time (p_c), s | 0.1 | 3.2 | 0.7 | 0.7 | 0.2 | 8.9 | 0.9 | 0.6 |

**Intersection Summary**

| | |
|---|---|
| HCM 6th Ctrl Delay | 35.1 |
| HCM 6th LOS | D |

**Notes**

Unsignalized Delay for [EBR, SBR] is excluded from calculations of the approach delay and intersection delay.

| Lane Group | EBL | EBT | EBR | WBL | WBT | WBR | NBL | NBT | SBL | SBT | SBR |
|---|---|---|---|---|---|---|---|---|---|---|---|
| Lane Configurations | | | | | | | | | | | |
| Traffic Volume (vph) | 435 | 128 | 92 | 242 | 80 | 105 | 91 | 1479 | 113 | 920 | 189 |
| Future Volume (vph) | 435 | 128 | 92 | 242 | 80 | 105 | 91 | 1479 | 113 | 920 | 189 |
| Turn Type | pm+pt | NA | Free | pm+pt | NA | Perm | pm+pt | NA | pm+pt | NA | Free |
| Protected Phases | 7 | 4 | | 3 | 8 | | 5 | 2 | 1 | 6 | |
| Permitted Phases | 4 | | Free | 8 | | 8 | 2 | | 6 | | Free |
| Detector Phase | 7 | 4 | | 3 | 8 | 8 | 5 | 2 | 1 | 6 | |
| Switch Phase | | | | | | | | | | | |
| Minimum Initial (s) | 30.0 | 25.0 | | 20.0 | 15.0 | 15.0 | 15.0 | 30.0 | 15.0 | 30.0 | |
| Minimum Split (s) | 35.0 | 45.0 | | 35.0 | 30.0 | 30.0 | 30.0 | 35.0 | 20.0 | 35.0 | |
| Total Split (s) | 40.0 | 50.0 | | 40.0 | 50.0 | 50.0 | 35.0 | 50.0 | 25.0 | 40.0 | |
| Total Split (%) | 24.2% | 30.3% | | 24.2% | 30.3% | 30.3% | 21.2% | 30.3% | 15.2% | 24.2% | |
| Yellow Time (s) | 4.0 | 4.0 | | 4.0 | 4.0 | 4.0 | 4.0 | 4.0 | 4.0 | 4.0 | |
| All-Red Time (s) | 1.0 | 1.0 | | 1.0 | 1.0 | 1.0 | 1.0 | 1.0 | 1.0 | 1.0 | |
| Lost Time Adjust (s) | 0.0 | 0.0 | | 0.0 | 0.0 | 0.0 | 0.0 | 0.0 | 0.0 | 0.0 | |
| Total Lost Time (s) | 5.0 | 5.0 | | 5.0 | 5.0 | 5.0 | 5.0 | 5.0 | 5.0 | 5.0 | |
| Lead/Lag | Lead | Lag | | Lead | Lag | Lag | Lead | Lag | Lead | Lag | |
| Lead-Lag Optimize? | | | | | | | | | | | |
| Recall Mode | None | None | | None | None | None | None | C-Max | None | C-Max | |

**Intersection Summary**

Cycle Length: 165
Actuated Cycle Length: 165
Offset: 0 (0%), Referenced to phase 2:NBTL and 6:SBTL, Start of Green
Natural Cycle: 145
Control Type: Actuated-Coordinated

Splits and Phases: 1: Cerrillos Rd. & Beckner Rd.

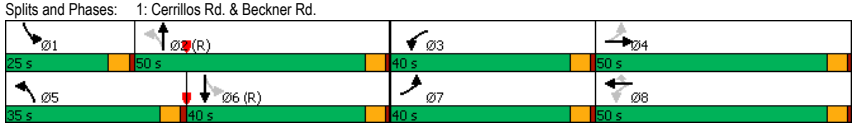






| Movement | EBL | EBT | EBR | WBL | WBT | WBR | NBL | NBT | NBR | SBL | SBT | SBR |
|---|---|---|---|---|---|---|---|---|---|---|---|---|
| Lane Configurations | | | | | | | | | | | | |
| Traffic Volume (veh/h) | 435 | 128 | 92 | 242 | 80 | 105 | 91 | 1479 | 333 | 113 | 920 | 189 |
| Future Volume (veh/h) | 435 | 128 | 92 | 242 | 80 | 105 | 91 | 1479 | 333 | 113 | 920 | 189 |
| Initial Q (Qb), veh | 0 | 0 | 0 | 0 | 0 | 0 | 0 | 0 | 0 | 0 | 0 | 0 |
| Ped-Bike Adj(A_pbT) | 1.00 | | 1.00 | 1.00 | | 1.00 | 1.00 | | 1.00 | 1.00 | | 1.00 |
| Parking Bus, Adj | 1.00 | 1.00 | 1.00 | 1.00 | 1.00 | 1.00 | 1.00 | 1.00 | 1.00 | 1.00 | 1.00 | 1.00 |
| Work Zone On Approach | | No | | | No | | | No | | | No | |
| Adj Sat Flow, veh/h/ln | 1870 | 1870 | 1870 | 1870 | 1870 | 1870 | 1870 | 1870 | 1870 | 1870 | 1870 | 1870 |
| Adj Flow Rate, veh/h | 506 | 149 | 0 | 281 | 93 | 122 | 106 | 1720 | 387 | 131 | 1070 | 0 |
| Peak Hour Factor | 0.86 | 0.86 | 0.86 | 0.86 | 0.86 | 0.86 | 0.86 | 0.86 | 0.86 | 0.86 | 0.86 | 0.86 |
| Percent Heavy Veh, % | 2 | 2 | 2 | 2 | 2 | 2 | 2 | 2 | 2 | 2 | 2 | 2 |
| Cap, veh/h | 477 | 283 | | 418 | 178 | 151 | 363 | 2010 | 446 | 226 | 1710 | |
| Arrive On Green | 0.21 | 0.15 | 0.00 | 0.16 | 0.10 | 0.10 | 0.09 | 0.48 | 0.48 | 0.12 | 0.64 | 0.00 |
| Sat Flow, veh/h | 1781 | 1870 | 1585 | 1781 | 1870 | 1585 | 1781 | 4180 | 927 | 1781 | 3554 | 1585 |
| Grp Volume(v), veh/h | 506 | 149 | 0 | 281 | 93 | 122 | 106 | 1396 | 711 | 131 | 1070 | 0 |
| Grp Sat Flow(s),veh/h/ln | 1781 | 1870 | 1585 | 1781 | 1870 | 1585 | 1781 | 1702 | 1703 | 1781 | 1777 | 1585 |
| Q Serve(g_s), s | 35.0 | 12.1 | 0.0 | 23.1 | 7.8 | 12.4 | 4.5 | 59.6 | 61.4 | 5.6 | 29.8 | 0.0 |
| Cycle Q Clear(g_c), s | 35.0 | 12.1 | 0.0 | 23.1 | 7.8 | 12.4 | 4.5 | 59.6 | 61.4 | 5.6 | 29.8 | 0.0 |
| Prop In Lane | 1.00 | | 1.00 | 1.00 | | 1.00 | 1.00 | | 0.54 | 1.00 | | 1.00 |
| Lane Grp Cap(c), veh/h | 477 | 283 | | 418 | 178 | 151 | 363 | 1637 | 819 | 226 | 1710 | |
| V/C Ratio(X) | 1.06 | 0.53 | | 0.67 | 0.52 | 0.81 | 0.29 | 0.85 | 0.87 | 0.58 | 0.63 | |
| Avail Cap(c_a), veh/h | 477 | 510 | | 518 | 510 | 432 | 526 | 1637 | 819 | 281 | 1710 | |
| HCM Platoon Ratio | 1.00 | 1.00 | 1.00 | 1.00 | 1.00 | 1.00 | 1.00 | 1.00 | 1.00 | 1.33 | 1.33 | 1.33 |
| Upstream Filter(I) | 1.00 | 1.00 | 0.00 | 1.00 | 1.00 | 1.00 | 1.00 | 1.00 | 1.00 | 0.66 | 0.66 | 0.00 |
| Uniform Delay (d), s/veh | 54.2 | 64.5 | 0.0 | 55.0 | 71.1 | 73.2 | 19.5 | 37.7 | 38.2 | 32.8 | 20.8 | 0.0 |
| Incr Delay (d2), s/veh | 58.1 | 1.5 | 0.0 | 2.5 | 2.4 | 9.8 | 0.4 | 5.9 | 12.0 | 1.5 | 1.2 | 0.0 |
| Initial Q Delay(d3),s/veh | 0.0 | 0.0 | 0.0 | 0.0 | 0.0 | 0.0 | 0.0 | 0.0 | 0.0 | 0.0 | 0.0 | 0.0 |
| %ile BackOfQ(95%),veh/ln | 16.4 | 9.8 | 0.0 | 15.9 | 6.9 | 9.2 | 3.3 | 33.5 | 36.0 | 4.4 | 15.1 | 0.0 |
| Unsig. Movement Delay, s/veh | | | | | | | | | | | | |
| LnGrp Delay(d),s/veh | 112.2 | 66.0 | 0.0 | 57.4 | 73.4 | 83.0 | 19.9 | 43.6 | 50.2 | 34.4 | 21.9 | 0.0 |
| LnGrp LOS | F | E | | E | E | F | B | D | D | C | C | |
| Approach Vol, veh/h | | 655 | | | 496 | | | 2213 | | | 1201 | |
| Approach Delay, s/veh | | 101.7 | | | 66.7 | | | 44.6 | | | 23.3 | |
| Approach LOS | | F | | | E | | | D | | | C | |

| Timer - Assigned Phs | 1 | 2 | 3 | 4 | 5 | 6 | 7 | 8 |
|---|---|---|---|---|---|---|---|---|
| Phs Duration (G+Y+Rc), s | 20.0 | 84.3 | 30.7 | 30.0 | 19.9 | 84.4 | 40.0 | 20.7 |
| Change Period (Y+Rc), s | 5.0 | 5.0 | 5.0 | 5.0 | 5.0 | 5.0 | 5.0 | 5.0 |
| Max Green Setting (Gmax), s | 20.0 | 45.0 | 35.0 | 45.0 | 30.0 | 35.0 | 35.0 | 45.0 |
| Max Q Clear Time (g_c+I1), s | 7.6 | 63.4 | 25.1 | 14.1 | 6.5 | 31.8 | 37.0 | 14.4 |
| Green Ext Time (p_c), s | 0.2 | 0.0 | 0.6 | 0.7 | 0.2 | 1.9 | 0.0 | 0.8 |

**Intersection Summary**

HCM 6th Ctrl Delay 49.6
HCM 6th LOS D

**Notes**

Unsignalized Delay for [EBR, SBR] is excluded from calculations of the approach delay and intersection delay.

| Lane Group | EBL | EBT | EBR | WBL | WBT | WBR | NBL | NBT | SBL | SBT | SBR |
|---|---|---|---|---|---|---|---|---|---|---|---|
| Lane Configurations | | | | | | | | | | | |
| Traffic Volume (vph) | 435 | 128 | 92 | 242 | 80 | 105 | 91 | 1479 | 113 | 920 | 189 |
| Future Volume (vph) | 435 | 128 | 92 | 242 | 80 | 105 | 91 | 1479 | 113 | 920 | 189 |
| Turn Type | Prot | NA | Free | Prot | NA | pm+ov | pm+pt | NA | pm+pt | NA | Free |
| Protected Phases | 7 | 4 | | 3 | 8 | 1 | 5 | 2 | 1 | 6 | |
| Permitted Phases | | | Free | | | 8 | 2 | | 6 | | Free |
| Detector Phase | 7 | 4 | | 3 | 8 | 1 | 5 | 2 | 1 | 6 | |
| Switch Phase | | | | | | | | | | | |
| Minimum Initial (s) | 30.0 | 25.0 | | 20.0 | 15.0 | 15.0 | 15.0 | 30.0 | 15.0 | 30.0 | |
| Minimum Split (s) | 35.0 | 45.0 | | 35.0 | 30.0 | 20.0 | 30.0 | 35.0 | 20.0 | 35.0 | |
| Total Split (s) | 35.0 | 45.0 | | 35.0 | 45.0 | 20.0 | 30.0 | 65.0 | 20.0 | 55.0 | |
| Total Split (%) | 21.2% | 27.3% | | 21.2% | 27.3% | 12.1% | 18.2% | 39.4% | 12.1% | 33.3% | |
| Yellow Time (s) | 4.0 | 4.0 | | 4.0 | 4.0 | 4.0 | 4.0 | 4.0 | 4.0 | 4.0 | |
| All-Red Time (s) | 1.0 | 1.0 | | 1.0 | 1.0 | 1.0 | 1.0 | 1.0 | 1.0 | 1.0 | |
| Lost Time Adjust (s) | 0.0 | 0.0 | | 0.0 | 0.0 | 0.0 | 0.0 | 0.0 | 0.0 | 0.0 | |
| Total Lost Time (s) | 5.0 | 5.0 | | 5.0 | 5.0 | 5.0 | 5.0 | 5.0 | 5.0 | 5.0 | |
| Lead/Lag | Lead | Lag | | Lead | Lag | Lead | Lead | Lag | Lead | Lag | |
| Lead-Lag Optimize? | | | | | | | | | | | |
| Recall Mode | None | None | | None | None | None | None | C-Max | None | C-Max | |

**Intersection Summary**

Cycle Length: 165
Actuated Cycle Length: 165
Offset: 0 (0%), Referenced to phase 2:NBTL and 6:SBTL, Start of Green
Natural Cycle: 145
Control Type: Actuated-Coordinated

Splits and Phases: 1: Cerrillos Rd. & Beckner Rd.

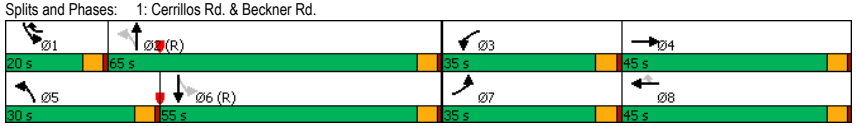






| Movement | EBL | EBT | EBR | WBL | WBT | WBR | NBL | NBT | NBR | SBL | SBT | SBR |
|---|---|---|---|---|---|---|---|---|---|---|---|---|
| Lane Configurations | | | | | | | | | | | | |
| Traffic Volume (veh/h) | 435 | 128 | 92 | 242 | 80 | 105 | 91 | 1479 | 333 | 113 | 920 | 189 |
| Future Volume (veh/h) | 435 | 128 | 92 | 242 | 80 | 105 | 91 | 1479 | 333 | 113 | 920 | 189 |
| Initial Q (Qb), veh | 0 | 0 | 0 | 0 | 0 | 0 | 0 | 0 | 0 | 0 | 0 | 0 |
| Ped-Bike Adj(A_pbT) | 1.00 | | 1.00 | 1.00 | | 1.00 | 1.00 | | 1.00 | 1.00 | | 1.00 |
| Parking Bus, Adj | 1.00 | 1.00 | 1.00 | 1.00 | 1.00 | 1.00 | 1.00 | 1.00 | 1.00 | 1.00 | 1.00 | 1.00 |
| Work Zone On Approach | | No | | | No | | | No | | | No | |
| Adj Sat Flow, veh/h/ln | 1870 | 1870 | 1870 | 1870 | 1870 | 1870 | 1870 | 1870 | 1870 | 1870 | 1870 | 1870 |
| Adj Flow Rate, veh/h | 506 | 149 | 0 | 281 | 93 | 122 | 106 | 1720 | 387 | 131 | 1070 | 0 |
| Peak Hour Factor | 0.86 | 0.86 | 0.86 | 0.86 | 0.86 | 0.86 | 0.86 | 0.86 | 0.86 | 0.86 | 0.86 | 0.86 |
| Percent Heavy Veh, % | 2 | 2 | 2 | 2 | 2 | 2 | 2 | 2 | 2 | 2 | 2 | 2 |
| Cap, veh/h | 628 | 283 | | 419 | 170 | 288 | 476 | 2154 | 478 | 238 | 1833 | |
| Arrive On Green | 0.18 | 0.15 | 0.00 | 0.12 | 0.09 | 0.09 | 0.09 | 0.52 | 0.52 | 0.18 | 1.00 | 0.00 |
| Sat Flow, veh/h | 3456 | 1870 | 1585 | 3456 | 1870 | 1585 | 1781 | 4180 | 927 | 1781 | 3554 | 1585 |
| Grp Volume(v), veh/h | 506 | 149 | 0 | 281 | 93 | 122 | 106 | 1396 | 711 | 131 | 1070 | 0 |
| Grp Sat Flow(s),veh/h/ln | 1728 | 1870 | 1585 | 1728 | 1870 | 1585 | 1781 | 1702 | 1703 | 1781 | 1777 | 1585 |
| Q Serve(g_s), s | 23.2 | 12.1 | 0.0 | 12.8 | 7.8 | 11.3 | 4.1 | 55.6 | 57.3 | 5.0 | 0.0 | 0.0 |
| Cycle Q Clear(g_c), s | 23.2 | 12.1 | 0.0 | 12.8 | 7.8 | 11.3 | 4.1 | 55.6 | 57.3 | 5.0 | 0.0 | 0.0 |
| Prop In Lane | 1.00 | | 1.00 | 1.00 | | 1.00 | 1.00 | | 0.54 | 1.00 | | 1.00 |
| Lane Grp Cap(c), veh/h | 628 | 283 | | 419 | 170 | 288 | 476 | 1754 | 878 | 238 | 1833 | |
| V/C Ratio(X) | 0.81 | 0.53 | | 0.67 | 0.55 | 0.42 | 0.22 | 0.80 | 0.81 | 0.55 | 0.58 | |
| Avail Cap(c_a), veh/h | 628 | 453 | | 628 | 453 | 528 | 585 | 1754 | 878 | 238 | 1833 | |
| HCM Platoon Ratio | 1.00 | 1.00 | 1.00 | 1.00 | 1.00 | 1.00 | 1.00 | 1.00 | 1.00 | 2.00 | 2.00 | 2.00 |
| Upstream Filter(I) | 1.00 | 1.00 | 0.00 | 1.00 | 1.00 | 1.00 | 1.00 | 1.00 | 1.00 | 0.74 | 0.74 | 0.00 |
| Uniform Delay (d), s/veh | 64.7 | 64.5 | 0.0 | 69.4 | 71.7 | 59.9 | 13.6 | 32.8 | 33.3 | 28.7 | 0.0 | 0.0 |
| Incr Delay (d2), s/veh | 7.6 | 1.5 | 0.0 | 1.9 | 2.7 | 1.0 | 0.2 | 3.8 | 8.0 | 2.0 | 1.0 | 0.0 |
| Initial Q Delay(d3),s/veh | 0.0 | 0.0 | 0.0 | 0.0 | 0.0 | 0.0 | 0.0 | 0.0 | 0.0 | 0.0 | 0.0 | 0.0 |
| %ile BackOfQ(95%),veh/ln | 16.1 | 9.8 | 0.0 | 9.7 | 6.9 | 8.1 | 3.0 | 30.9 | 32.9 | 4.5 | 0.5 | 0.0 |
| Unsig. Movement Delay, s/veh | | | | | | | | | | | | |
| LnGrp Delay(d),s/veh | 72.3 | 66.0 | 0.0 | 71.2 | 74.5 | 60.9 | 13.9 | 36.7 | 41.2 | 30.7 | 1.0 | 0.0 |
| LnGrp LOS | E | E | | E | E | E | B | D | D | C | A | |
| Approach Vol, veh/h | | 655 | | | 496 | | | 2213 | | | 1201 | |
| Approach Delay, s/veh | | 70.9 | | | 69.3 | | | 37.1 | | | 4.3 | |
| Approach LOS | | E | | | E | | | D | | | A | |

| Timer - Assigned Phs | 1 | 2 | 3 | 4 | 5 | 6 | 7 | 8 |
|---|---|---|---|---|---|---|---|---|
| Phs Duration (G+Y+Rc), s | 20.0 | 90.0 | 25.0 | 30.0 | 19.9 | 90.1 | 35.0 | 20.0 |
| Change Period (Y+Rc), s | 5.0 | 5.0 | 5.0 | 5.0 | 5.0 | 5.0 | 5.0 | 5.0 |
| Max Green Setting (Gmax), s | 15.0 | 60.0 | 30.0 | 40.0 | 25.0 | 50.0 | 30.0 | 40.0 |
| Max Q Clear Time (g_c+I1), s | 7.0 | 59.3 | 14.8 | 14.1 | 6.1 | 2.0 | 25.2 | 13.3 |
| Green Ext Time (p_c), s | 0.2 | 0.7 | 0.8 | 0.7 | 0.2 | 8.9 | 0.9 | 0.8 |

**Intersection Summary**

| | |
|---|---|
| HCM 6th Ctrl Delay | 36.8 |
| HCM 6th LOS | D |

**Notes**

Unsignalized Delay for [EBR, SBR] is excluded from calculations of the approach delay and intersection delay.

| Lane Group | EBL | EBT | EBR | WBL | WBT | WBR | NBL | NBT | SBL | SBT | SBR |
|---|---|---|---|---|---|---|---|---|---|---|---|
| Lane Configurations | | | | | | | | | | | |
| Traffic Volume (vph) | 322 | 50 | 61 | 329 | 95 | 127 | 95 | 1273 | 66 | 1518 | 358 |
| Future Volume (vph) | 322 | 50 | 61 | 329 | 95 | 127 | 95 | 1273 | 66 | 1518 | 358 |
| Turn Type | pm+pt | NA | Free | pm+pt | NA | Perm | pm+pt | NA | pm+pt | NA | Free |
| Protected Phases | 7 | 4 | | 3 | 8 | | 5 | 2 | 1 | 6 | |
| Permitted Phases | 4 | | Free | 8 | | 8 | 2 | | 6 | | Free |
| Detector Phase | 7 | 4 | | 3 | 8 | 8 | 5 | 2 | 1 | 6 | |
| Switch Phase | | | | | | | | | | | |
| Minimum Initial (s) | 30.0 | 25.0 | | 20.0 | 15.0 | 15.0 | 15.0 | 30.0 | 15.0 | 30.0 | |
| Minimum Split (s) | 35.0 | 45.0 | | 35.0 | 30.0 | 30.0 | 30.0 | 35.0 | 20.0 | 35.0 | |
| Total Split (s) | 40.0 | 35.0 | | 30.0 | 25.0 | 25.0 | 25.0 | 95.0 | 25.0 | 95.0 | |
| Total Split (%) | 21.6% | 18.9% | | 16.2% | 13.5% | 13.5% | 13.5% | 51.4% | 13.5% | 51.4% | |
| Yellow Time (s) | 4.0 | 4.0 | | 4.0 | 4.0 | 4.0 | 4.0 | 4.0 | 4.0 | 4.0 | |
| All-Red Time (s) | 1.0 | 1.0 | | 1.0 | 1.0 | 1.0 | 1.0 | 1.0 | 1.0 | 1.0 | |
| Lost Time Adjust (s) | 0.0 | 0.0 | | 0.0 | 0.0 | 0.0 | 0.0 | 0.0 | 0.0 | 0.0 | |
| Total Lost Time (s) | 5.0 | 5.0 | | 5.0 | 5.0 | 5.0 | 5.0 | 5.0 | 5.0 | 5.0 | |
| Lead/Lag | Lead | Lag | | Lead | Lag | Lag | Lead | Lag | Lead | Lag | |
| Lead-Lag Optimize? | | | | | | | | | | | |
| Recall Mode | None | None | | None | None | None | None | C-Max | None | C-Max | |

**Intersection Summary**

Cycle Length: 185
Actuated Cycle Length: 185
Offset: 75 (41%), Referenced to phase 2:NBTL and 6:SBTL, Start of Green
Natural Cycle: 145
Control Type: Actuated-Coordinated

Splits and Phases: 1: Cerrillos Rd. & Beckner Rd.








| Movement | EBL | EBT | EBR | WBL | WBT | WBR | NBL | NBT | NBR | SBL | SBT | SBR |
|---|---|---|---|---|---|---|---|---|---|---|---|---|
| Lane Configurations | | | | | | | | | | | | |
| Traffic Volume (veh/h) | 322 | 50 | 61 | 329 | 95 | 127 | 95 | 1273 | 186 | 66 | 1518 | 358 |
| Future Volume (veh/h) | 322 | 50 | 61 | 329 | 95 | 127 | 95 | 1273 | 186 | 66 | 1518 | 358 |
| Initial Q (Qb), veh | 0 | 0 | 0 | 0 | 0 | 0 | 0 | 0 | 0 | 0 | 0 | 0 |
| Ped-Bike Adj(A_pbT) | 1.00 | | 1.00 | 1.00 | | 1.00 | 1.00 | | 1.00 | 1.00 | | 1.00 |
| Parking Bus, Adj | 1.00 | 1.00 | 1.00 | 1.00 | 1.00 | 1.00 | 1.00 | 1.00 | 1.00 | 1.00 | 1.00 | 1.00 |
| Work Zone On Approach | | No | | | No | | | No | | | No | |
| Adj Sat Flow, veh/h/ln | 1870 | 1870 | 1870 | 1870 | 1870 | 1870 | 1870 | 1870 | 1870 | 1870 | 1870 | 1870 |
| Adj Flow Rate, veh/h | 335 | 52 | 0 | 343 | 99 | 132 | 99 | 1326 | 194 | 69 | 1581 | 0 |
| Peak Hour Factor | 0.96 | 0.96 | 0.96 | 0.96 | 0.96 | 0.96 | 0.96 | 0.96 | 0.96 | 0.96 | 0.96 | 0.96 |
| Percent Heavy Veh, % | 2 | 2 | 2 | 2 | 2 | 2 | 2 | 2 | 2 | 2 | 2 | 2 |
| Cap, veh/h | 406 | 257 | | 407 | 176 | 149 | 357 | 2432 | 356 | 299 | 1915 | |
| Arrive On Green | 0.18 | 0.14 | 0.00 | 0.14 | 0.09 | 0.09 | 0.08 | 0.54 | 0.54 | 0.16 | 1.00 | 0.00 |
| Sat Flow, veh/h | 1781 | 1870 | 1585 | 1781 | 1870 | 1585 | 1781 | 4498 | 658 | 1781 | 3554 | 1585 |
| Grp Volume(v), veh/h | 335 | 52 | 0 | 343 | 99 | 132 | 99 | 1003 | 517 | 69 | 1581 | 0 |
| Grp Sat Flow(s),veh/h/ln | 1781 | 1870 | 1585 | 1781 | 1870 | 1585 | 1781 | 1702 | 1752 | 1781 | 1777 | 1585 |
| Q Serve(g_s), s | 30.7 | 4.6 | 0.0 | 25.0 | 9.4 | 15.2 | 4.1 | 35.5 | 35.5 | 2.7 | 0.0 | 0.0 |
| Cycle Q Clear(g_c), s | 30.7 | 4.6 | 0.0 | 25.0 | 9.4 | 15.2 | 4.1 | 35.5 | 35.5 | 2.7 | 0.0 | 0.0 |
| Prop In Lane | 1.00 | | 1.00 | 1.00 | | 1.00 | 1.00 | | 0.38 | 1.00 | | 1.00 |
| Lane Grp Cap(c), veh/h | 406 | 257 | | 407 | 176 | 149 | 357 | 1841 | 947 | 299 | 1915 | |
| V/C Ratio(X) | 0.82 | 0.20 | | 0.84 | 0.56 | 0.88 | 0.28 | 0.55 | 0.55 | 0.23 | 0.83 | |
| Avail Cap(c_a), veh/h | 426 | 303 | | 407 | 202 | 171 | 406 | 1841 | 947 | 351 | 1915 | |
| HCM Platoon Ratio | 1.00 | 1.00 | 1.00 | 1.00 | 1.00 | 1.00 | 1.00 | 1.00 | 1.00 | 2.00 | 2.00 | 2.00 |
| Upstream Filter(I) | 1.00 | 1.00 | 0.00 | 1.00 | 1.00 | 1.00 | 1.00 | 1.00 | 1.00 | 0.45 | 0.45 | 0.00 |
| Uniform Delay (d), s/veh | 59.0 | 70.8 | 0.0 | 68.4 | 80.1 | 82.8 | 14.2 | 27.7 | 27.7 | 16.6 | 0.0 | 0.0 |
| Incr Delay (d2), s/veh | 12.0 | 0.4 | 0.0 | 14.7 | 2.8 | 35.0 | 0.4 | 1.2 | 2.3 | 0.2 | 2.0 | 0.0 |
| Initial Q Delay(d3),s/veh | 0.0 | 0.0 | 0.0 | 0.0 | 0.0 | 0.0 | 0.0 | 0.0 | 0.0 | 0.0 | 0.0 | 0.0 |
| %ile BackOfQ(50%),veh/ln | 15.1 | 2.2 | 0.0 | 4.8 | 4.6 | 7.6 | 1.7 | 14.5 | 15.3 | 1.1 | 0.5 | 0.0 |
| Unsig. Movement Delay, s/veh | | | | | | | | | | | | |
| LnGrp Delay(d),s/veh | 71.0 | 71.2 | 0.0 | 83.1 | 82.9 | 117.7 | 14.6 | 28.8 | 29.9 | 16.8 | 2.0 | 0.0 |
| LnGrp LOS | E | E | | F | F | F | B | C | C | B | A | |
| Approach Vol, veh/h | | 387 | | | 574 | | | 1619 | | | 1650 | |
| Approach Delay, s/veh | | 71.0 | | | 91.1 | | | 28.3 | | | 2.6 | |
| Approach LOS | | E | | | F | | | C | | | A | |

| Timer - Assigned Phs | 1 | 2 | 3 | 4 | 5 | 6 | 7 | 8 |
|---|---|---|---|---|---|---|---|---|
| Phs Duration (G+Y+Rc), s | 19.6 | 105.0 | 30.0 | 30.4 | 19.9 | 104.7 | 38.0 | 22.4 |
| Change Period (Y+Rc), s | 5.0 | 5.0 | 5.0 | 5.0 | 5.0 | 5.0 | 5.0 | 5.0 |
| Max Green Setting (Gmax), s | 20.0 | 90.0 | 25.0 | 30.0 | 20.0 | 90.0 | 35.0 | 20.0 |
| Max Q Clear Time (g_c+I1), s | 4.7 | 37.5 | 27.0 | 6.6 | 6.1 | 2.0 | 32.7 | 17.2 |
| Green Ext Time (p_c), s | 0.1 | 14.0 | 0.0 | 0.2 | 0.2 | 18.7 | 0.2 | 0.2 |

**Intersection Summary**

| | |
|---|---|
| HCM 6th Ctrl Delay | 30.7 |
| HCM 6th LOS | C |

**Notes**

Unsignalized Delay for [EBR, SBR] is excluded from calculations of the approach delay and intersection delay.

| Lane Group | EBL | EBT | EBR | WBL | WBT | WBR | NBL | NBT | SBL | SBT | SBR |
|---|---|---|---|---|---|---|---|---|---|---|---|
| Lane Configurations | | | | | | | | | | | |
| Traffic Volume (vph) | 322 | 50 | 61 | 329 | 95 | 127 | 95 | 1273 | 66 | 1518 | 358 |
| Future Volume (vph) | 322 | 50 | 61 | 329 | 95 | 127 | 95 | 1273 | 66 | 1518 | 358 |
| Turn Type | Prot | NA | Free | Prot | NA | pm+ov | pm+pt | NA | pm+pt | NA | Free |
| Protected Phases | 7 | 4 | | 3 | 8 | 1 | 5 | 2 | 1 | 6 | |
| Permitted Phases | | | Free | | | 8 | 2 | | 6 | | Free |
| Detector Phase | 7 | 4 | | 3 | 8 | 1 | 5 | 2 | 1 | 6 | |
| Switch Phase | | | | | | | | | | | |
| Minimum Initial (s) | 30.0 | 25.0 | | 20.0 | 15.0 | 15.0 | 15.0 | 30.0 | 15.0 | 30.0 | |
| Minimum Split (s) | 35.0 | 45.0 | | 35.0 | 30.0 | 20.0 | 30.0 | 35.0 | 20.0 | 35.0 | |
| Total Split (s) | 35.0 | 45.0 | | 35.0 | 45.0 | 20.0 | 30.0 | 85.0 | 20.0 | 75.0 | |
| Total Split (%) | 18.9% | 24.3% | | 18.9% | 24.3% | 10.8% | 16.2% | 45.9% | 10.8% | 40.5% | |
| Yellow Time (s) | 4.0 | 4.0 | | 4.0 | 4.0 | 4.0 | 4.0 | 4.0 | 4.0 | 4.0 | |
| All-Red Time (s) | 1.0 | 1.0 | | 1.0 | 1.0 | 1.0 | 1.0 | 1.0 | 1.0 | 1.0 | |
| Lost Time Adjust (s) | 0.0 | 0.0 | | 0.0 | 0.0 | 0.0 | 0.0 | 0.0 | 0.0 | 0.0 | |
| Total Lost Time (s) | 5.0 | 5.0 | | 5.0 | 5.0 | 5.0 | 5.0 | 5.0 | 5.0 | 5.0 | |
| Lead/Lag | Lead | Lag | | Lead | Lag | Lead | Lead | Lag | Lead | Lag | |
| Lead-Lag Optimize? | | | | | | | | | | | |
| Recall Mode | None | None | | None | None | None | None | C-Max | None | C-Max | |

**Intersection Summary**

Cycle Length: 185
Actuated Cycle Length: 185
Offset: 75 (41%), Referenced to phase 2:NBTL and 6:SBTL, Start of Green
Natural Cycle: 145
Control Type: Actuated-Coordinated

Splits and Phases: 1: Cerrillos Rd. & Beckner Rd.

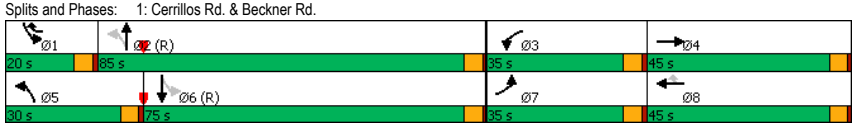






| Movement | EBL | EBT | EBR | WBL | WBT | WBR | NBL | NBT | NBR | SBL | SBT | SBR |
|---|---|---|---|---|---|---|---|---|---|---|---|---|
| Lane Configurations | | | | | | | | | | | | |
| Traffic Volume (veh/h) | 322 | 50 | 61 | 329 | 95 | 127 | 95 | 1273 | 186 | 66 | 1518 | 358 |
| Future Volume (veh/h) | 322 | 50 | 61 | 329 | 95 | 127 | 95 | 1273 | 186 | 66 | 1518 | 358 |
| Initial Q (Qb), veh | 0 | 0 | 0 | 0 | 0 | 0 | 0 | 0 | 0 | 0 | 0 | 0 |
| Ped-Bike Adj(A_pbT) | 1.00 | | 1.00 | 1.00 | | 1.00 | 1.00 | | 1.00 | 1.00 | | 1.00 |
| Parking Bus, Adj | 1.00 | 1.00 | 1.00 | 1.00 | 1.00 | 1.00 | 1.00 | 1.00 | 1.00 | 1.00 | 1.00 | 1.00 |
| Work Zone On Approach | | No | | | No | | | No | | | No | |
| Adj Sat Flow, veh/h/ln | 1870 | 1870 | 1870 | 1870 | 1870 | 1870 | 1870 | 1870 | 1870 | 1870 | 1870 | 1870 |
| Adj Flow Rate, veh/h | 335 | 52 | 0 | 343 | 99 | 132 | 99 | 1326 | 194 | 69 | 1581 | 0 |
| Peak Hour Factor | 0.96 | 0.96 | 0.96 | 0.96 | 0.96 | 0.96 | 0.96 | 0.96 | 0.96 | 0.96 | 0.96 | 0.96 |
| Percent Heavy Veh, % | 2 | 2 | 2 | 2 | 2 | 2 | 2 | 2 | 2 | 2 | 2 | 2 |
| Cap, veh/h | 560 | 262 | | 391 | 170 | 269 | 363 | 2520 | 369 | 308 | 1984 | |
| Arrive On Green | 0.16 | 0.14 | 0.00 | 0.11 | 0.09 | 0.09 | 0.08 | 0.56 | 0.56 | 0.16 | 1.00 | 0.00 |
| Sat Flow, veh/h | 3456 | 1870 | 1585 | 3456 | 1870 | 1585 | 1781 | 4498 | 658 | 1781 | 3554 | 1585 |
| Grp Volume(v), veh/h | 335 | 52 | 0 | 343 | 99 | 132 | 99 | 1003 | 517 | 69 | 1581 | 0 |
| Grp Sat Flow(s),veh/h/ln | 1728 | 1870 | 1585 | 1728 | 1870 | 1585 | 1781 | 1702 | 1752 | 1781 | 1777 | 1585 |
| Q Serve(g_s), s | 16.6 | 4.6 | 0.0 | 18.1 | 9.4 | 14.0 | 3.9 | 34.0 | 34.0 | 2.6 | 0.0 | 0.0 |
| Cycle Q Clear(g_c), s | 16.6 | 4.6 | 0.0 | 18.1 | 9.4 | 14.0 | 3.9 | 34.0 | 34.0 | 2.6 | 0.0 | 0.0 |
| Prop In Lane | 1.00 | | 1.00 | 1.00 | | 1.00 | 1.00 | | 0.38 | 1.00 | | 1.00 |
| Lane Grp Cap(c), veh/h | 560 | 262 | | 391 | 170 | 269 | 363 | 1907 | 981 | 308 | 1984 | |
| V/C Ratio(X) | 0.60 | 0.20 | | 0.88 | 0.58 | 0.49 | 0.27 | 0.53 | 0.53 | 0.22 | 0.80 | |
| Avail Cap(c_a), veh/h | 560 | 404 | | 560 | 404 | 468 | 460 | 1907 | 981 | 312 | 1984 | |
| HCM Platoon Ratio | 1.00 | 1.00 | 1.00 | 1.00 | 1.00 | 1.00 | 1.00 | 1.00 | 1.00 | 2.00 | 2.00 | 2.00 |
| Upstream Filter(I) | 1.00 | 1.00 | 0.00 | 1.00 | 1.00 | 1.00 | 1.00 | 1.00 | 1.00 | 0.51 | 0.51 | 0.00 |
| Uniform Delay (d), s/veh | 71.9 | 70.4 | 0.0 | 80.8 | 80.7 | 69.6 | 12.8 | 25.4 | 25.4 | 15.0 | 0.0 | 0.0 |
| Incr Delay (d2), s/veh | 1.7 | 0.4 | 0.0 | 10.8 | 3.1 | 1.4 | 0.4 | 1.0 | 2.0 | 0.2 | 1.8 | 0.0 |
| Initial Q Delay(d3),s/veh | 0.0 | 0.0 | 0.0 | 0.0 | 0.0 | 0.0 | 0.0 | 0.0 | 0.0 | 0.0 | 0.0 | 0.0 |
| %ile BackOfQ(50%),veh/ln | 7.5 | 2.2 | 0.0 | 8.6 | 4.7 | 5.7 | 1.6 | 13.8 | 14.5 | 1.0 | 0.5 | 0.0 |
| Unsig. Movement Delay, s/veh | | | | | | | | | | | | |
| LnGrp Delay(d),s/veh | 73.6 | 70.7 | 0.0 | 91.6 | 83.9 | 71.0 | 13.2 | 26.4 | 27.4 | 15.2 | 1.8 | 0.0 |
| LnGrp LOS | E | E | | F | F | E | B | C | C | B | A | |
| Approach Vol, veh/h | | 387 | | | 574 | | | 1619 | | | 1650 | |
| Approach Delay, s/veh | | 73.3 | | | 85.5 | | | 25.9 | | | 2.3 | |
| Approach LOS | | E | | | F | | | C | | | A | |

| Timer - Assigned Phs | 1 | 2 | 3 | 4 | 5 | 6 | 7 | 8 |
|---|---|---|---|---|---|---|---|---|
| Phs Duration (G+Y+Rc), s | 19.6 | 108.6 | 25.9 | 30.9 | 19.9 | 108.3 | 35.0 | 21.8 |
| Change Period (Y+Rc), s | 5.0 | 5.0 | 5.0 | 5.0 | 5.0 | 5.0 | 5.0 | 5.0 |
| Max Green Setting (Gmax), s | 15.0 | 80.0 | 30.0 | 40.0 | 25.0 | 70.0 | 30.0 | 40.0 |
| Max Q Clear Time (g_c+I1), s | 4.6 | 36.0 | 20.1 | 6.6 | 5.9 | 2.0 | 18.6 | 16.0 |
| Green Ext Time (p_c), s | 0.1 | 13.5 | 0.8 | 0.2 | 0.2 | 18.2 | 0.9 | 0.8 |

**Intersection Summary**

| | |
|---|---|
| HCM 6th Ctrl Delay | 29.1 |
| HCM 6th LOS | C |

**Notes**

Unsignalized Delay for [EBR, SBR] is excluded from calculations of the approach delay and intersection delay.

| Lane Group | EBL | EBT | EBR | WBL | WBT | WBR | NBL | NBT | SBL | SBT | SBR |
|---|---|---|---|---|---|---|---|---|---|---|---|
| Lane Configurations | | | | | | | | | | | |
| Traffic Volume (vph) | 322 | 53 | 61 | 380 | 98 | 204 | 95 | 1273 | 131 | 1518 | 358 |
| Future Volume (vph) | 322 | 53 | 61 | 380 | 98 | 204 | 95 | 1273 | 131 | 1518 | 358 |
| Turn Type | pm+pt | NA | Free | pm+pt | NA | Perm | pm+pt | NA | pm+pt | NA | Free |
| Protected Phases | 7 | 4 | | 3 | 8 | | 5 | 2 | 1 | 6 | |
| Permitted Phases | 4 | | Free | 8 | | 8 | 2 | | 6 | | Free |
| Detector Phase | 7 | 4 | | 3 | 8 | 8 | 5 | 2 | 1 | 6 | |
| Switch Phase | | | | | | | | | | | |
| Minimum Initial (s) | 30.0 | 25.0 | | 20.0 | 15.0 | 15.0 | 15.0 | 30.0 | 15.0 | 30.0 | |
| Minimum Split (s) | 35.0 | 45.0 | | 35.0 | 30.0 | 30.0 | 30.0 | 35.0 | 20.0 | 35.0 | |
| Total Split (s) | 40.0 | 35.0 | | 30.0 | 25.0 | 25.0 | 25.0 | 95.0 | 25.0 | 95.0 | |
| Total Split (%) | 21.6% | 18.9% | | 16.2% | 13.5% | 13.5% | 13.5% | 51.4% | 13.5% | 51.4% | |
| Yellow Time (s) | 4.0 | 4.0 | | 4.0 | 4.0 | 4.0 | 4.0 | 4.0 | 4.0 | 4.0 | |
| All-Red Time (s) | 1.0 | 1.0 | | 1.0 | 1.0 | 1.0 | 1.0 | 1.0 | 1.0 | 1.0 | |
| Lost Time Adjust (s) | 0.0 | 0.0 | | 0.0 | 0.0 | 0.0 | 0.0 | 0.0 | 0.0 | 0.0 | |
| Total Lost Time (s) | 5.0 | 5.0 | | 5.0 | 5.0 | 5.0 | 5.0 | 5.0 | 5.0 | 5.0 | |
| Lead/Lag | Lead | Lag | | Lead | Lag | Lag | Lead | Lag | Lead | Lag | |
| Lead-Lag Optimize? | | | | | | | | | | | |
| Recall Mode | None | None | | None | None | None | None | C-Max | None | C-Max | |

**Intersection Summary**

Cycle Length: 185
Actuated Cycle Length: 185
Offset: 75 (41%), Referenced to phase 2:NBTL and 6:SBTL, Start of Green
Natural Cycle: 145
Control Type: Actuated-Coordinated

Splits and Phases: 1: Cerrillos Rd. & Beckner Rd.








| Movement | EBL | EBT | EBR | WBL | WBT | WBR | NBL | NBT | NBR | SBL | SBT | SBR |
|---|---|---|---|---|---|---|---|---|---|---|---|---|
| Lane Configurations | | | | | | | | | | | | |
| Traffic Volume (veh/h) | 322 | 53 | 61 | 380 | 98 | 204 | 95 | 1273 | 224 | 131 | 1518 | 358 |
| Future Volume (veh/h) | 322 | 53 | 61 | 380 | 98 | 204 | 95 | 1273 | 224 | 131 | 1518 | 358 |
| Initial Q (Qb), veh | 0 | 0 | 0 | 0 | 0 | 0 | 0 | 0 | 0 | 0 | 0 | 0 |
| Ped-Bike Adj(A_pbT) | 1.00 | | 1.00 | 1.00 | | 1.00 | 1.00 | | 1.00 | 1.00 | | 1.00 |
| Parking Bus, Adj | 1.00 | 1.00 | 1.00 | 1.00 | 1.00 | 1.00 | 1.00 | 1.00 | 1.00 | 1.00 | 1.00 | 1.00 |
| Work Zone On Approach | | No | | | No | | | No | | | No | |
| Adj Sat Flow, veh/h/ln | 1870 | 1870 | 1870 | 1870 | 1870 | 1870 | 1870 | 1870 | 1870 | 1870 | 1870 | 1870 |
| Adj Flow Rate, veh/h | 335 | 55 | 0 | 396 | 102 | 212 | 99 | 1326 | 233 | 136 | 1581 | 0 |
| Peak Hour Factor | 0.96 | 0.96 | 0.96 | 0.96 | 0.96 | 0.96 | 0.96 | 0.96 | 0.96 | 0.96 | 0.96 | 0.96 |
| Percent Heavy Veh, % | 2 | 2 | 2 | 2 | 2 | 2 | 2 | 2 | 2 | 2 | 2 | 2 |
| Cap, veh/h | 412 | 278 | | 425 | 202 | 171 | 353 | 2302 | 404 | 289 | 1874 | |
| Arrive On Green | 0.18 | 0.15 | 0.00 | 0.14 | 0.11 | 0.11 | 0.08 | 0.53 | 0.53 | 0.16 | 1.00 | 0.00 |
| Sat Flow, veh/h | 1781 | 1870 | 1585 | 1781 | 1870 | 1585 | 1781 | 4369 | 767 | 1781 | 3554 | 1585 |
| Grp Volume(v), veh/h | 335 | 55 | 0 | 396 | 102 | 212 | 99 | 1033 | 526 | 136 | 1581 | 0 |
| Grp Sat Flow(s),veh/h/ln | 1781 | 1870 | 1585 | 1781 | 1870 | 1585 | 1781 | 1702 | 1732 | 1781 | 1777 | 1585 |
| Q Serve(g_s), s | 30.2 | 4.8 | 0.0 | 25.0 | 9.5 | 20.0 | 4.3 | 38.1 | 38.1 | 6.0 | 0.0 | 0.0 |
| Cycle Q Clear(g_c), s | 30.2 | 4.8 | 0.0 | 25.0 | 9.5 | 20.0 | 4.3 | 38.1 | 38.1 | 6.0 | 0.0 | 0.0 |
| Prop In Lane | 1.00 | | 1.00 | 1.00 | | 1.00 | 1.00 | | 0.44 | 1.00 | | 1.00 |
| Lane Grp Cap(c), veh/h | 412 | 278 | | 425 | 202 | 171 | 353 | 1794 | 913 | 289 | 1874 | |
| V/C Ratio(X) | 0.81 | 0.20 | | 0.93 | 0.50 | 1.24 | 0.28 | 0.58 | 0.58 | 0.47 | 0.84 | |
| Avail Cap(c_a), veh/h | 436 | 303 | | 425 | 202 | 171 | 402 | 1794 | 913 | 338 | 1874 | |
| HCM Platoon Ratio | 1.00 | 1.00 | 1.00 | 1.00 | 1.00 | 1.00 | 1.00 | 1.00 | 1.00 | 2.00 | 2.00 | 2.00 |
| Upstream Filter(I) | 1.00 | 1.00 | 0.00 | 1.00 | 1.00 | 1.00 | 1.00 | 1.00 | 1.00 | 0.38 | 0.38 | 0.00 |
| Uniform Delay (d), s/veh | 57.2 | 69.1 | 0.0 | 69.1 | 77.8 | 82.5 | 15.1 | 29.7 | 29.7 | 19.8 | 0.0 | 0.0 |
| Incr Delay (d2), s/veh | 10.7 | 0.3 | 0.0 | 27.1 | 2.0 | 146.6 | 0.4 | 1.4 | 2.6 | 0.5 | 1.9 | 0.0 |
| Initial Q Delay(d3),s/veh | 0.0 | 0.0 | 0.0 | 0.0 | 0.0 | 0.0 | 0.0 | 0.0 | 0.0 | 0.0 | 0.0 | 0.0 |
| %ile BackOfQ(95%),veh/ln | 21.0 | 4.1 | 0.0 | 14.4 | 8.2 | 23.3 | 3.2 | 22.2 | 23.0 | 3.8 | 0.9 | 0.0 |
| Unsig. Movement Delay, s/veh | | | | | | | | | | | | |
| LnGrp Delay(d),s/veh | 67.9 | 69.4 | 0.0 | 96.2 | 79.8 | 229.1 | 15.5 | 31.1 | 32.4 | 20.2 | 1.9 | 0.0 |
| LnGrp LOS | E | E | | F | E | F | B | C | C | C | A | |
| Approach Vol, veh/h | | 390 | | | 710 | | | 1658 | | | 1717 | |
| Approach Delay, s/veh | | 68.1 | | | 133.5 | | | 30.5 | | | 3.4 | |
| Approach LOS | | E | | | F | | | C | | | A | |

| Timer - Assigned Phs | 1 | 2 | 3 | 4 | 5 | 6 | 7 | 8 |
|---|---|---|---|---|---|---|---|---|
| Phs Duration (G+Y+Rc), s | 20.0 | 102.5 | 30.0 | 32.5 | 19.9 | 102.6 | 37.5 | 25.0 |
| Change Period (Y+Rc), s | 5.0 | 5.0 | 5.0 | 5.0 | 5.0 | 5.0 | 5.0 | 5.0 |
| Max Green Setting (Gmax), s | 20.0 | 90.0 | 25.0 | 30.0 | 20.0 | 90.0 | 35.0 | 20.0 |
| Max Q Clear Time (g_c+I1), s | 8.0 | 40.1 | 27.0 | 6.8 | 6.3 | 2.0 | 32.2 | 22.0 |
| Green Ext Time (p_c), s | 0.2 | 14.5 | 0.0 | 0.2 | 0.2 | 18.7 | 0.3 | 0.0 |

**Intersection Summary**

| | |
|---|---|
| HCM 6th Ctrl Delay | 39.7 |
| HCM 6th LOS | D |

**Notes**

Unsignalized Delay for [EBR, SBR] is excluded from calculations of the approach delay and intersection delay.

| Lane Group | EBL | EBT | EBR | WBL | WBT | WBR | NBL | NBT | SBL | SBT | SBR |
|---|---|---|---|---|---|---|---|---|---|---|---|
| Lane Configurations | | | | | | | | | | | |
| Traffic Volume (vph) | 322 | 53 | 61 | 380 | 98 | 204 | 95 | 1273 | 131 | 1518 | 358 |
| Future Volume (vph) | 322 | 53 | 61 | 380 | 98 | 204 | 95 | 1273 | 131 | 1518 | 358 |
| Turn Type | Prot | NA | Free | Prot | NA | pm+ov | pm+pt | NA | pm+pt | NA | Free |
| Protected Phases | 7 | 4 | | 3 | 8 | 1 | 5 | 2 | 1 | 6 | |
| Permitted Phases | | | Free | | | 8 | 2 | | 6 | | Free |
| Detector Phase | 7 | 4 | | 3 | 8 | 1 | 5 | 2 | 1 | 6 | |
| Switch Phase | | | | | | | | | | | |
| Minimum Initial (s) | 27.0 | 25.0 | | 20.0 | 15.0 | 15.0 | 15.0 | 30.0 | 15.0 | 30.0 | |
| Minimum Split (s) | 32.0 | 45.0 | | 35.0 | 30.0 | 20.0 | 30.0 | 35.0 | 20.0 | 35.0 | |
| Total Split (s) | 32.0 | 45.0 | | 35.0 | 48.0 | 21.0 | 30.0 | 84.0 | 21.0 | 75.0 | |
| Total Split (%) | 17.3% | 24.3% | | 18.9% | 25.9% | 11.4% | 16.2% | 45.4% | 11.4% | 40.5% | |
| Yellow Time (s) | 4.0 | 4.0 | | 4.0 | 4.0 | 4.0 | 4.0 | 4.0 | 4.0 | 4.0 | |
| All-Red Time (s) | 1.0 | 1.0 | | 1.0 | 1.0 | 1.0 | 1.0 | 1.0 | 1.0 | 1.0 | |
| Lost Time Adjust (s) | 0.0 | 0.0 | | 0.0 | 0.0 | 0.0 | 0.0 | 0.0 | 0.0 | 0.0 | |
| Total Lost Time (s) | 5.0 | 5.0 | | 5.0 | 5.0 | 5.0 | 5.0 | 5.0 | 5.0 | 5.0 | |
| Lead/Lag | Lead | Lag | | Lead | Lag | Lead | Lead | Lag | Lead | Lag | |
| Lead-Lag Optimize? | | | | | | | | | | | |
| Recall Mode | None | None | | None | None | None | None | C-Max | None | C-Max | |

**Intersection Summary**

Cycle Length: 185
Actuated Cycle Length: 185
Offset: 75 (41%), Referenced to phase 2:NBTL and 6:SBTL, Start of Green
Natural Cycle: 145
Control Type: Actuated-Coordinated

Splits and Phases: 1: Cerrillos Rd. & Beckner Rd.

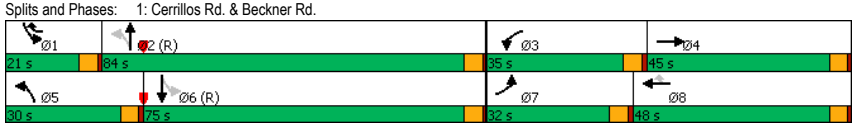






| Movement | EBL | EBT | EBR | WBL | WBT | WBR | NBL | NBT | NBR | SBL | SBT | SBR |
|---|---|---|---|---|---|---|---|---|---|---|---|---|
| Lane Configurations | | | | | | | | | | | | |
| Traffic Volume (veh/h) | 322 | 53 | 61 | 380 | 98 | 204 | 95 | 1273 | 224 | 131 | 1518 | 358 |
| Future Volume (veh/h) | 322 | 53 | 61 | 380 | 98 | 204 | 95 | 1273 | 224 | 131 | 1518 | 358 |
| Initial Q (Qb), veh | 0 | 0 | 0 | 0 | 0 | 0 | 0 | 0 | 0 | 0 | 0 | 0 |
| Ped-Bike Adj(A_pbT) | 1.00 | | 1.00 | 1.00 | | 1.00 | 1.00 | | 1.00 | 1.00 | | 1.00 |
| Parking Bus, Adj | 1.00 | 1.00 | 1.00 | 1.00 | 1.00 | 1.00 | 1.00 | 1.00 | 1.00 | 1.00 | 1.00 | 1.00 |
| Work Zone On Approach | | No | | | No | | | No | | | No | |
| Adj Sat Flow, veh/h/ln | 1870 | 1870 | 1870 | 1870 | 1870 | 1870 | 1870 | 1870 | 1870 | 1870 | 1870 | 1870 |
| Adj Flow Rate, veh/h | 335 | 55 | 0 | 396 | 102 | 212 | 99 | 1326 | 233 | 136 | 1581 | 0 |
| Peak Hour Factor | 0.96 | 0.96 | 0.96 | 0.96 | 0.96 | 0.96 | 0.96 | 0.96 | 0.96 | 0.96 | 0.96 | 0.96 |
| Percent Heavy Veh, % | 2 | 2 | 2 | 2 | 2 | 2 | 2 | 2 | 2 | 2 | 2 | 2 |
| Cap, veh/h | 504 | 290 | | 443 | 257 | 346 | 353 | 2305 | 405 | 290 | 1876 | |
| Arrive On Green | 0.15 | 0.16 | 0.00 | 0.13 | 0.14 | 0.14 | 0.08 | 0.53 | 0.53 | 0.16 | 1.00 | 0.00 |
| Sat Flow, veh/h | 3456 | 1870 | 1585 | 3456 | 1870 | 1585 | 1781 | 4369 | 767 | 1781 | 3554 | 1585 |
| Grp Volume(v), veh/h | 335 | 55 | 0 | 396 | 102 | 212 | 99 | 1033 | 526 | 136 | 1581 | 0 |
| Grp Sat Flow(s),veh/h/ln | 1728 | 1870 | 1585 | 1728 | 1870 | 1585 | 1781 | 1702 | 1732 | 1781 | 1777 | 1585 |
| Q Serve(g_s), s | 17.0 | 4.7 | 0.0 | 20.9 | 9.2 | 22.3 | 4.3 | 38.1 | 38.1 | 5.9 | 0.0 | 0.0 |
| Cycle Q Clear(g_c), s | 17.0 | 4.7 | 0.0 | 20.9 | 9.2 | 22.3 | 4.3 | 38.1 | 38.1 | 5.9 | 0.0 | 0.0 |
| Prop In Lane | 1.00 | | 1.00 | 1.00 | | 1.00 | 1.00 | | 0.44 | 1.00 | | 1.00 |
| Lane Grp Cap(c), veh/h | 504 | 290 | | 443 | 257 | 346 | 353 | 1796 | 914 | 290 | 1876 | |
| V/C Ratio(X) | 0.66 | 0.19 | | 0.89 | 0.40 | 0.61 | 0.28 | 0.58 | 0.58 | 0.47 | 0.84 | |
| Avail Cap(c_a), veh/h | 504 | 404 | | 560 | 435 | 497 | 450 | 1796 | 914 | 299 | 1876 | |
| HCM Platoon Ratio | 1.00 | 1.00 | 1.00 | 1.00 | 1.00 | 1.00 | 1.00 | 1.00 | 1.00 | 2.00 | 2.00 | 2.00 |
| Upstream Filter(I) | 1.00 | 1.00 | 0.00 | 1.00 | 1.00 | 1.00 | 1.00 | 1.00 | 1.00 | 0.45 | 0.45 | 0.00 |
| Uniform Delay (d), s/veh | 74.7 | 68.0 | 0.0 | 79.4 | 72.8 | 65.2 | 15.0 | 29.6 | 29.6 | 19.7 | 0.0 | 0.0 |
| Incr Delay (d2), s/veh | 3.3 | 0.3 | 0.0 | 14.3 | 1.0 | 1.8 | 0.4 | 1.3 | 2.6 | 0.5 | 2.2 | 0.0 |
| Initial Q Delay(d3),s/veh | 0.0 | 0.0 | 0.0 | 0.0 | 0.0 | 0.0 | 0.0 | 0.0 | 0.0 | 0.0 | 0.0 | 0.0 |
| %ile BackOfQ(95%),veh/ln | 12.3 | 4.1 | 0.0 | 15.3 | 7.9 | 14.1 | 3.2 | 22.2 | 22.9 | 3.9 | 1.1 | 0.0 |
| Unsig. Movement Delay, s/veh | | | | | | | | | | | | |
| LnGrp Delay(d),s/veh | 78.0 | 68.3 | 0.0 | 93.7 | 73.8 | 67.0 | 15.5 | 31.0 | 32.3 | 20.2 | 2.2 | 0.0 |
| LnGrp LOS | E | E | | F | E | E | B | C | C | C | A | |
| Approach Vol, veh/h | | 390 | | | 710 | | | 1658 | | | 1717 | |
| Approach Delay, s/veh | | 76.6 | | | 82.9 | | | 30.5 | | | 3.7 | |
| Approach LOS | | E | | | F | | | C | | | A | |

| Timer - Assigned Phs | 1 | 2 | 3 | 4 | 5 | 6 | 7 | 8 |
|---|---|---|---|---|---|---|---|---|
| Phs Duration (G+Y+Rc), s | 20.0 | 102.6 | 28.7 | 33.7 | 19.9 | 102.7 | 32.0 | 30.4 |
| Change Period (Y+Rc), s | 5.0 | 5.0 | 5.0 | 5.0 | 5.0 | 5.0 | 5.0 | 5.0 |
| Max Green Setting (Gmax), s | 16.0 | 79.0 | 30.0 | 40.0 | 25.0 | 70.0 | 27.0 | 43.0 |
| Max Q Clear Time (g_c+I1), s | 7.9 | 40.1 | 22.9 | 6.7 | 6.3 | 2.0 | 19.0 | 24.3 |
| Green Ext Time (p_c), s | 0.2 | 13.7 | 0.8 | 0.2 | 0.2 | 18.2 | 0.7 | 1.1 |

**Intersection Summary**

| | |
|---|---|
| HCM 6th Ctrl Delay | 32.5 |
| HCM 6th LOS | C |

**Notes**

Unsignalized Delay for [EBR, SBR] is excluded from calculations of the approach delay and intersection delay.



| Lane Group | EBL | EBT | EBR | WBL | WBT | WBR | NBL | NBT | SBL | SBT | SBR |
|---|---|---|---|---|---|---|---|---|---|---|---|
| Lane Configurations | | | | | | | | | | | |
| Traffic Volume (vph) | 154 | 133 | 216 | 108 | 148 | 76 | 322 | 1371 | 96 | 872 | 78 |
| Future Volume (vph) | 154 | 133 | 216 | 108 | 148 | 76 | 322 | 1371 | 96 | 872 | 78 |
| Turn Type | Prot | NA | Perm | Prot | NA | Perm | pm+pt | NA | pm+pt | NA | Perm |
| Protected Phases | 7 | 4 | | 3 | 8 | | 5 | 2 | 1 | 6 | |
| Permitted Phases | | | 4 | | | 8 | 2 | | 6 | | 6 |
| Detector Phase | 7 | 4 | 4 | 3 | 8 | 8 | 5 | 2 | 1 | 6 | 6 |
| Switch Phase | | | | | | | | | | | |
| Minimum Initial (s) | 15.0 | 15.0 | 15.0 | 20.0 | 20.0 | 20.0 | 20.0 | 40.0 | 15.0 | 35.0 | 35.0 |
| Minimum Split (s) | 20.0 | 23.0 | 23.0 | 25.0 | 25.0 | 25.0 | 25.0 | 45.0 | 20.0 | 40.0 | 40.0 |
| Total Split (s) | 33.0 | 36.0 | 36.0 | 38.0 | 41.0 | 41.0 | 38.0 | 58.0 | 33.0 | 53.0 | 53.0 |
| Total Split (%) | 20.0% | 21.8% | 21.8% | 23.0% | 24.8% | 24.8% | 23.0% | 35.2% | 20.0% | 32.1% | 32.1% |
| Yellow Time (s) | 4.0 | 4.0 | 4.0 | 4.0 | 4.0 | 4.0 | 4.0 | 4.0 | 4.0 | 4.0 | 4.0 |
| All-Red Time (s) | 1.0 | 1.0 | 1.0 | 1.0 | 1.0 | 1.0 | 1.0 | 1.0 | 1.0 | 1.0 | 1.0 |
| Lost Time Adjust (s) | 0.0 | 0.0 | 0.0 | 0.0 | 0.0 | 0.0 | 0.0 | 0.0 | 0.0 | 0.0 | 0.0 |
| Total Lost Time (s) | 5.0 | 5.0 | 5.0 | 5.0 | 5.0 | 5.0 | 5.0 | 5.0 | 5.0 | 5.0 | 5.0 |
| Lead/Lag | Lead | Lag | Lag | Lead | Lag | Lag | Lead | Lag | Lead | Lag | Lag |
| Lead-Lag Optimize? | | | | | | | | | | | |
| Recall Mode | None | None | None | None | None | None | None | C-Max | None | C-Max | C-Max |

**Intersection Summary**

Cycle Length: 165
Actuated Cycle Length: 165
Offset: 40 (24%), Referenced to phase 2:NBTL and 6:SBTL, Start of Green
Natural Cycle: 115
Control Type: Actuated-Coordinated
Description: Wellness Way (Herrera)

Splits and Phases: 2: Cerrillos Rd. & Herrera Dr./Wellness Way

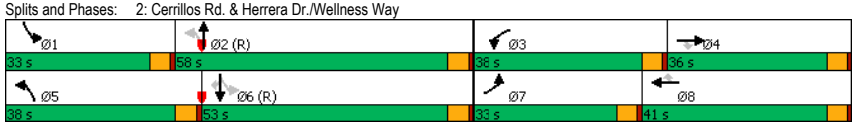








| Movement | EBL | EBT | EBR | WBL | WBT | WBR | NBL | NBT | NBR | SBL | SBT | SBR |
|---|---|---|---|---|---|---|---|---|---|---|---|---|
| Lane Configurations | | | | | | | | | | | | |
| Traffic Volume (veh/h) | 154 | 133 | 216 | 108 | 148 | 76 | 322 | 1371 | 169 | 96 | 872 | 78 |
| Future Volume (veh/h) | 154 | 133 | 216 | 108 | 148 | 76 | 322 | 1371 | 169 | 96 | 872 | 78 |
| Initial Q (Qb), veh | 0 | 0 | 0 | 0 | 0 | 0 | 0 | 0 | 0 | 0 | 0 | 0 |
| Ped-Bike Adj(A_pbT) | 1.00 | | 1.00 | 1.00 | | 1.00 | 1.00 | | 1.00 | 1.00 | | 1.00 |
| Parking Bus, Adj | 1.00 | 1.00 | 1.00 | 1.00 | 1.00 | 1.00 | 1.00 | 1.00 | 1.00 | 1.00 | 1.00 | 1.00 |
| Work Zone On Approach | | No | | | No | | | No | | | No | |
| Adj Sat Flow, veh/h/ln | 1870 | 1870 | 1870 | 1870 | 1870 | 1870 | 1870 | 1870 | 1870 | 1870 | 1870 | 1870 |
| Adj Flow Rate, veh/h | 181 | 156 | 254 | 127 | 174 | 89 | 379 | 1613 | 199 | 113 | 1026 | 92 |
| Peak Hour Factor | 0.85 | 0.85 | 0.85 | 0.85 | 0.85 | 0.85 | 0.85 | 0.85 | 0.85 | 0.85 | 0.85 | 0.85 |
| Percent Heavy Veh, % | 2 | 2 | 2 | 2 | 2 | 2 | 2 | 2 | 2 | 2 | 2 | 2 |
| Cap, veh/h | 314 | 616 | 275 | 418 | 380 | 322 | 406 | 2276 | 280 | 319 | 1573 | 702 |
| Arrive On Green | 0.09 | 0.17 | 0.17 | 0.12 | 0.20 | 0.20 | 0.28 | 0.99 | 0.99 | 0.09 | 0.44 | 0.44 |
| Sat Flow, veh/h | 3456 | 3554 | 1585 | 3456 | 1870 | 1585 | 1781 | 4606 | 567 | 1781 | 3554 | 1585 |
| Grp Volume(v), veh/h | 181 | 156 | 254 | 127 | 174 | 89 | 379 | 1191 | 621 | 113 | 1026 | 92 |
| Grp Sat Flow(s),veh/h/ln | 1728 | 1777 | 1585 | 1728 | 1870 | 1585 | 1781 | 1702 | 1768 | 1781 | 1777 | 1585 |
| Q Serve(g_s), s | 8.3 | 6.3 | 26.0 | 5.5 | 13.5 | 7.8 | 20.6 | 2.2 | 2.2 | 5.2 | 37.3 | 5.7 |
| Cycle Q Clear(g_c), s | 8.3 | 6.3 | 26.0 | 5.5 | 13.5 | 7.8 | 20.6 | 2.2 | 2.2 | 5.2 | 37.3 | 5.7 |
| Prop In Lane | 1.00 | | 1.00 | 1.00 | | 1.00 | 1.00 | | 0.32 | 1.00 | | 1.00 |
| Lane Grp Cap(c), veh/h | 314 | 616 | 275 | 418 | 380 | 322 | 406 | 1683 | 874 | 319 | 1573 | 702 |
| V/C Ratio(X) | 0.58 | 0.25 | 0.92 | 0.30 | 0.46 | 0.28 | 0.93 | 0.71 | 0.71 | 0.35 | 0.65 | 0.13 |
| Avail Cap(c_a), veh/h | 586 | 668 | 298 | 691 | 408 | 346 | 509 | 1683 | 874 | 460 | 1573 | 702 |
| HCM Platoon Ratio | 1.00 | 1.00 | 1.00 | 1.00 | 1.00 | 1.00 | 2.00 | 2.00 | 2.00 | 1.00 | 1.00 | 1.00 |
| Upstream Filter(I) | 1.00 | 1.00 | 1.00 | 1.00 | 1.00 | 1.00 | 0.39 | 0.39 | 0.39 | 1.00 | 1.00 | 1.00 |
| Uniform Delay (d), s/veh | 72.0 | 59.0 | 67.1 | 66.2 | 57.7 | 55.5 | 23.8 | 0.5 | 0.5 | 19.2 | 36.0 | 27.2 |
| Incr Delay (d2), s/veh | 1.7 | 0.2 | 31.9 | 0.4 | 0.9 | 0.5 | 10.8 | 1.0 | 1.9 | 0.7 | 2.1 | 0.4 |
| Initial Q Delay(d3),s/veh | 0.0 | 0.0 | 0.0 | 0.0 | 0.0 | 0.0 | 0.0 | 0.0 | 0.0 | 0.0 | 0.0 | 0.0 |
| %ile BackOfQ(95%),veh/ln | 6.8 | 5.2 | 18.9 | 4.5 | 10.7 | 5.8 | 9.6 | 0.9 | 1.3 | 4.0 | 22.9 | 4.1 |
| Unsig. Movement Delay, s/veh | | | | | | | | | | | | |
| LnGrp Delay(d),s/veh | 73.6 | 59.2 | 99.1 | 66.6 | 58.6 | 55.9 | 34.6 | 1.5 | 2.4 | 19.9 | 38.1 | 27.6 |
| LnGrp LOS | E | E | F | E | E | E | C | A | A | B | D | C |
| Approach Vol, veh/h | | 591 | | | 390 | | | 2191 | | | 1231 | |
| Approach Delay, s/veh | | 80.7 | | | 60.6 | | | 7.5 | | | 35.7 | |
| Approach LOS | | F | | | E | | | A | | | D | |

| Timer - Assigned Phs | 1 | 2 | 3 | 4 | 5 | 6 | 7 | 8 |
|---|---|---|---|---|---|---|---|---|
| Phs Duration (G+Y+Rc), s | 19.9 | 86.6 | 24.9 | 33.6 | 28.4 | 78.1 | 20.0 | 38.5 |
| Change Period (Y+Rc), s | 5.0 | 5.0 | 5.0 | 5.0 | 5.0 | 5.0 | 5.0 | 5.0 |
| Max Green Setting (Gmax), s | 28.0 | 53.0 | 33.0 | 31.0 | 33.0 | 48.0 | 28.0 | 36.0 |
| Max Q Clear Time (g_c+I1), s | 7.2 | 4.2 | 7.5 | 28.0 | 22.6 | 39.3 | 10.3 | 15.5 |
| Green Ext Time (p_c), s | 0.2 | 18.6 | 0.4 | 0.6 | 0.8 | 4.4 | 0.5 | 1.2 |

**Intersection Summary**

HCM 6th Ctrl Delay 29.9
HCM 6th LOS C



| Lane Group | EBL | EBT | EBR | WBL | WBT | WBR | NBL | NBT | SBL | SBT | SBR |
|---|---|---|---|---|---|---|---|---|---|---|---|
| Lane Configurations | | | | | | | | | | | |
| Traffic Volume (vph) | 154 | 133 | 216 | 108 | 148 | 76 | 322 | 1371 | 96 | 872 | 78 |
| Future Volume (vph) | 154 | 133 | 216 | 108 | 148 | 76 | 322 | 1371 | 96 | 872 | 78 |
| Turn Type | Prot | NA | pm+ov | Prot | NA | pm+ov | pm+pt | NA | pm+pt | NA | Perm |
| Protected Phases | 7 | 4 | 5 | 3 | 8 | 1 | 5 | 2 | 1 | 6 | |
| Permitted Phases | | | 4 | | | 8 | 2 | | 6 | | 6 |
| Detector Phase | 7 | 4 | 5 | 3 | 8 | 1 | 5 | 2 | 1 | 6 | 6 |
| Switch Phase | | | | | | | | | | | |
| Minimum Initial (s) | 15.0 | 15.0 | 20.0 | 20.0 | 20.0 | 15.0 | 20.0 | 40.0 | 15.0 | 35.0 | 35.0 |
| Minimum Split (s) | 20.0 | 23.0 | 25.0 | 25.0 | 25.0 | 20.0 | 25.0 | 45.0 | 20.0 | 40.0 | 40.0 |
| Total Split (s) | 33.0 | 36.0 | 38.0 | 38.0 | 41.0 | 33.0 | 38.0 | 58.0 | 33.0 | 53.0 | 53.0 |
| Total Split (%) | 20.0% | 21.8% | 23.0% | 23.0% | 24.8% | 20.0% | 23.0% | 35.2% | 20.0% | 32.1% | 32.1% |
| Yellow Time (s) | 4.0 | 4.0 | 4.0 | 4.0 | 4.0 | 4.0 | 4.0 | 4.0 | 4.0 | 4.0 | 4.0 |
| All-Red Time (s) | 1.0 | 1.0 | 1.0 | 1.0 | 1.0 | 1.0 | 1.0 | 1.0 | 1.0 | 1.0 | 1.0 |
| Lost Time Adjust (s) | 0.0 | 0.0 | 0.0 | 0.0 | 0.0 | 0.0 | 0.0 | 0.0 | 0.0 | 0.0 | 0.0 |
| Total Lost Time (s) | 5.0 | 5.0 | 5.0 | 5.0 | 5.0 | 5.0 | 5.0 | 5.0 | 5.0 | 5.0 | 5.0 |
| Lead/Lag | Lead | Lag | Lead | Lead | Lag | Lead | Lead | Lag | Lead | Lag | Lag |
| Lead-Lag Optimize? | | | | | | | | | | | |
| Recall Mode | None | None | None | None | None | None | None | C-Max | None | C-Max | C-Max |

**Intersection Summary**

Cycle Length: 165
Actuated Cycle Length: 165
Offset: 40 (24%), Referenced to phase 2:NBTL and 6:SBTL, Start of Green
Natural Cycle: 115
Control Type: Actuated-Coordinated
Description: Wellness Way (Herrera)

Splits and Phases: 2: Cerrillos Rd. & Herrera Dr./Wellness Way










| Movement | EBL | EBT | EBR | WBL | WBT | WBR | NBL | NBT | NBR | SBL | SBT | SBR |
|---|---|---|---|---|---|---|---|---|---|---|---|---|
| Lane Configurations | | | | | | | | | | | | |
| Traffic Volume (veh/h) | 154 | 133 | 216 | 108 | 148 | 76 | 322 | 1371 | 169 | 96 | 872 | 78 |
| Future Volume (veh/h) | 154 | 133 | 216 | 108 | 148 | 76 | 322 | 1371 | 169 | 96 | 872 | 78 |
| Initial Q (Qb), veh | 0 | 0 | 0 | 0 | 0 | 0 | 0 | 0 | 0 | 0 | 0 | 0 |
| Ped-Bike Adj(A_pbT) | 1.00 | | 1.00 | 1.00 | | 1.00 | 1.00 | | 1.00 | 1.00 | | 1.00 |
| Parking Bus, Adj | 1.00 | 1.00 | 1.00 | 1.00 | 1.00 | 1.00 | 1.00 | 1.00 | 1.00 | 1.00 | 1.00 | 1.00 |
| Work Zone On Approach | | No | | | No | | | No | | | No | |
| Adj Sat Flow, veh/h/ln | 1870 | 1870 | 1870 | 1870 | 1870 | 1870 | 1870 | 1870 | 1870 | 1870 | 1870 | 1870 |
| Adj Flow Rate, veh/h | 181 | 156 | 254 | 127 | 174 | 89 | 379 | 1613 | 199 | 113 | 1026 | 92 |
| Peak Hour Factor | 0.85 | 0.85 | 0.85 | 0.85 | 0.85 | 0.85 | 0.85 | 0.85 | 0.85 | 0.85 | 0.85 | 0.85 |
| Percent Heavy Veh, % | 2 | 2 | 2 | 2 | 2 | 2 | 2 | 2 | 2 | 2 | 2 | 2 |
| Cap, veh/h | 314 | 546 | 461 | 418 | 344 | 435 | 414 | 2366 | 291 | 326 | 1660 | 740 |
| Arrive On Green | 0.09 | 0.15 | 0.15 | 0.12 | 0.18 | 0.18 | 0.27 | 1.00 | 1.00 | 0.09 | 0.47 | 0.47 |
| Sat Flow, veh/h | 3456 | 3554 | 1585 | 3456 | 1870 | 1585 | 1781 | 4606 | 567 | 1781 | 3554 | 1585 |
| Grp Volume(v), veh/h | 181 | 156 | 254 | 127 | 174 | 89 | 379 | 1191 | 621 | 113 | 1026 | 92 |
| Grp Sat Flow(s),veh/h/ln | 1728 | 1777 | 1585 | 1728 | 1870 | 1585 | 1781 | 1702 | 1768 | 1781 | 1777 | 1585 |
| Q Serve(g_s), s | 8.3 | 6.4 | 22.3 | 5.5 | 13.8 | 7.1 | 19.7 | 0.0 | 0.0 | 4.9 | 35.7 | 5.4 |
| Cycle Q Clear(g_c), s | 8.3 | 6.4 | 22.3 | 5.5 | 13.8 | 7.1 | 19.7 | 0.0 | 0.0 | 4.9 | 35.7 | 5.4 |
| Prop In Lane | 1.00 | | 1.00 | 1.00 | | 1.00 | 1.00 | | 0.32 | 1.00 | | 1.00 |
| Lane Grp Cap(c), veh/h | 314 | 546 | 461 | 418 | 344 | 435 | 414 | 1749 | 909 | 326 | 1660 | 740 |
| V/C Ratio(X) | 0.58 | 0.29 | 0.55 | 0.30 | 0.51 | 0.20 | 0.92 | 0.68 | 0.68 | 0.35 | 0.62 | 0.12 |
| Avail Cap(c_a), veh/h | 586 | 668 | 515 | 691 | 408 | 489 | 526 | 1749 | 909 | 467 | 1660 | 740 |
| HCM Platoon Ratio | 1.00 | 1.00 | 1.00 | 1.00 | 1.00 | 1.00 | 2.00 | 2.00 | 2.00 | 1.00 | 1.00 | 1.00 |
| Upstream Filter(I) | 1.00 | 1.00 | 1.00 | 1.00 | 1.00 | 1.00 | 0.51 | 0.51 | 0.51 | 1.00 | 1.00 | 1.00 |
| Uniform Delay (d), s/veh | 72.0 | 61.8 | 49.4 | 66.2 | 60.6 | 46.1 | 22.4 | 0.0 | 0.0 | 17.2 | 32.9 | 24.9 |
| Incr Delay (d2), s/veh | 1.7 | 0.3 | 1.0 | 0.4 | 1.2 | 0.2 | 10.5 | 1.1 | 2.1 | 0.6 | 1.7 | 0.3 |
| Initial Q Delay(d3),s/veh | 0.0 | 0.0 | 0.0 | 0.0 | 0.0 | 0.0 | 0.0 | 0.0 | 0.0 | 0.0 | 0.0 | 0.0 |
| %ile BackOfQ(95%),veh/ln | 6.8 | 5.3 | 14.0 | 4.5 | 11.0 | 5.2 | 10.2 | 0.5 | 1.0 | 3.7 | 21.9 | 3.9 |
| Unsig. Movement Delay, s/veh | | | | | | | | | | | | |
| LnGrp Delay(d),s/veh | 73.6 | 62.1 | 50.4 | 66.6 | 61.8 | 46.3 | 33.0 | 1.1 | 2.1 | 17.9 | 34.7 | 25.2 |
| LnGrp LOS | E | E | D | E | E | D | C | A | A | B | C | C |
| Approach Vol, veh/h | | 591 | | | 390 | | | 2191 | | | 1231 | |
| Approach Delay, s/veh | | 60.6 | | | 59.8 | | | 6.9 | | | 32.4 | |
| Approach LOS | | E | | | E | | | A | | | C | |

| Timer - Assigned Phs | 1 | 2 | 3 | 4 | 5 | 6 | 7 | 8 |
|---|---|---|---|---|---|---|---|---|
| Phs Duration (G+Y+Rc), s | 19.9 | 89.8 | 24.9 | 30.4 | 27.6 | 82.1 | 20.0 | 35.3 |
| Change Period (Y+Rc), s | 5.0 | 5.0 | 5.0 | 5.0 | 5.0 | 5.0 | 5.0 | 5.0 |
| Max Green Setting (Gmax), s | 28.0 | 53.0 | 33.0 | 31.0 | 33.0 | 48.0 | 28.0 | 36.0 |
| Max Q Clear Time (g_c+I1), s | 6.9 | 2.0 | 7.5 | 24.3 | 21.7 | 37.7 | 10.3 | 15.8 |
| Green Ext Time (p_c), s | 0.2 | 18.9 | 0.4 | 1.0 | 0.9 | 4.9 | 0.5 | 1.2 |

**Intersection Summary**

| | |
|---|---|
| HCM 6th Ctrl Delay | 25.9 |
| HCM 6th LOS | C |



| Lane Group | EBL | EBT | EBR | WBL | WBT | WBR | NBL | NBT | SBL | SBT | SBR |
|---|---|---|---|---|---|---|---|---|---|---|---|
| Lane Configurations | | | | | | | | | | | |
| Traffic Volume (vph) | 154 | 168 | 246 | 108 | 162 | 128 | 322 | 1388 | 195 | 935 | 78 |
| Future Volume (vph) | 154 | 168 | 246 | 108 | 162 | 128 | 322 | 1388 | 195 | 935 | 78 |
| Turn Type | Prot | NA | Perm | Prot | NA | Perm | pm+pt | NA | pm+pt | NA | Perm |
| Protected Phases | 7 | 4 | | 3 | 8 | | 5 | 2 | 1 | 6 | |
| Permitted Phases | | | 4 | | | 8 | 2 | | 6 | | 6 |
| Detector Phase | 7 | 4 | 4 | 3 | 8 | 8 | 5 | 2 | 1 | 6 | 6 |
| Switch Phase | | | | | | | | | | | |
| Minimum Initial (s) | 15.0 | 15.0 | 15.0 | 20.0 | 20.0 | 20.0 | 20.0 | 40.0 | 15.0 | 35.0 | 35.0 |
| Minimum Split (s) | 20.0 | 23.0 | 23.0 | 25.0 | 25.0 | 25.0 | 25.0 | 45.0 | 20.0 | 40.0 | 40.0 |
| Total Split (s) | 33.0 | 36.0 | 36.0 | 38.0 | 41.0 | 41.0 | 38.0 | 58.0 | 33.0 | 53.0 | 53.0 |
| Total Split (%) | 20.0% | 21.8% | 21.8% | 23.0% | 24.8% | 24.8% | 23.0% | 35.2% | 20.0% | 32.1% | 32.1% |
| Yellow Time (s) | 4.0 | 4.0 | 4.0 | 4.0 | 4.0 | 4.0 | 4.0 | 4.0 | 4.0 | 4.0 | 4.0 |
| All-Red Time (s) | 1.0 | 1.0 | 1.0 | 1.0 | 1.0 | 1.0 | 1.0 | 1.0 | 1.0 | 1.0 | 1.0 |
| Lost Time Adjust (s) | 0.0 | 0.0 | 0.0 | 0.0 | 0.0 | 0.0 | 0.0 | 0.0 | 0.0 | 0.0 | 0.0 |
| Total Lost Time (s) | 5.0 | 5.0 | 5.0 | 5.0 | 5.0 | 5.0 | 5.0 | 5.0 | 5.0 | 5.0 | 5.0 |
| Lead/Lag | Lead | Lag | Lag | Lead | Lag | Lag | Lead | Lag | Lead | Lag | Lag |
| Lead-Lag Optimize? | | | | | | | | | | | |
| Recall Mode | None | None | None | None | None | None | None | C-Max | None | C-Max | C-Max |

**Intersection Summary**

Cycle Length: 165
Actuated Cycle Length: 165
Offset: 40 (24%), Referenced to phase 2:NBTL and 6:SBTL, Start of Green
Natural Cycle: 115
Control Type: Actuated-Coordinated
Description: Wellness Way (Herrera)

Splits and Phases: 2: Cerrillos Rd. & Herrera Dr./Wellness Way

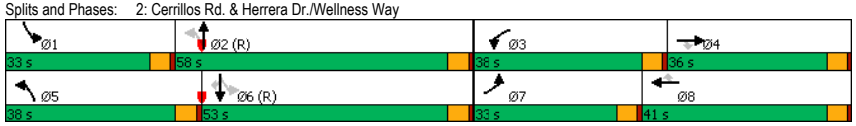








| Movement | EBL | EBT | EBR | WBL | WBT | WBR | NBL | NBT | NBR | SBL | SBT | SBR |
|---|---|---|---|---|---|---|---|---|---|---|---|---|
| Lane Configurations | | | | | | | | | | | | |
| Traffic Volume (veh/h) | 154 | 168 | 246 | 108 | 162 | 128 | 322 | 1388 | 169 | 195 | 935 | 78 |
| Future Volume (veh/h) | 154 | 168 | 246 | 108 | 162 | 128 | 322 | 1388 | 169 | 195 | 935 | 78 |
| Initial Q (Qb), veh | 0 | 0 | 0 | 0 | 0 | 0 | 0 | 0 | 0 | 0 | 0 | 0 |
| Ped-Bike Adj(A_pbT) | 1.00 | | 1.00 | 1.00 | | 1.00 | 1.00 | | 1.00 | 1.00 | | 1.00 |
| Parking Bus, Adj | 1.00 | 1.00 | 1.00 | 1.00 | 1.00 | 1.00 | 1.00 | 1.00 | 1.00 | 1.00 | 1.00 | 1.00 |
| Work Zone On Approach | | No | | | No | | | No | | | No | |
| Adj Sat Flow, veh/h/ln | 1870 | 1870 | 1870 | 1870 | 1870 | 1870 | 1870 | 1870 | 1870 | 1870 | 1870 | 1870 |
| Adj Flow Rate, veh/h | 181 | 198 | 289 | 127 | 191 | 151 | 379 | 1633 | 199 | 229 | 1100 | 92 |
| Peak Hour Factor | 0.85 | 0.85 | 0.85 | 0.85 | 0.85 | 0.85 | 0.85 | 0.85 | 0.85 | 0.85 | 0.85 | 0.85 |
| Percent Heavy Veh, % | 2 | 2 | 2 | 2 | 2 | 2 | 2 | 2 | 2 | 2 | 2 | 2 |
| Cap, veh/h | 314 | 668 | 298 | 418 | 407 | 345 | 396 | 2210 | 269 | 310 | 1461 | 652 |
| Arrive On Green | 0.09 | 0.19 | 0.19 | 0.12 | 0.22 | 0.22 | 0.32 | 0.96 | 0.96 | 0.09 | 0.41 | 0.41 |
| Sat Flow, veh/h | 3456 | 3554 | 1585 | 3456 | 1870 | 1585 | 1781 | 4613 | 561 | 1781 | 3554 | 1585 |
| Grp Volume(v), veh/h | 181 | 198 | 289 | 127 | 191 | 151 | 379 | 1204 | 628 | 229 | 1100 | 92 |
| Grp Sat Flow(s),veh/h/ln | 1728 | 1777 | 1585 | 1728 | 1870 | 1585 | 1781 | 1702 | 1769 | 1781 | 1777 | 1585 |
| Q Serve(g_s), s | 8.3 | 7.9 | 29.9 | 5.5 | 14.7 | 13.6 | 23.5 | 8.3 | 8.4 | 12.1 | 43.6 | 6.0 |
| Cycle Q Clear(g_c), s | 8.3 | 7.9 | 29.9 | 5.5 | 14.7 | 13.6 | 23.5 | 8.3 | 8.4 | 12.1 | 43.6 | 6.0 |
| Prop In Lane | 1.00 | | 1.00 | 1.00 | | 1.00 | 1.00 | | 0.32 | 1.00 | | 1.00 |
| Lane Grp Cap(c), veh/h | 314 | 668 | 298 | 418 | 407 | 345 | 396 | 1631 | 848 | 310 | 1461 | 652 |
| V/C Ratio(X) | 0.58 | 0.30 | 0.97 | 0.30 | 0.47 | 0.44 | 0.96 | 0.74 | 0.74 | 0.74 | 0.75 | 0.14 |
| Avail Cap(c_a), veh/h | 586 | 668 | 298 | 691 | 408 | 346 | 469 | 1631 | 848 | 450 | 1461 | 652 |
| HCM Platoon Ratio | 1.00 | 1.00 | 1.00 | 1.00 | 1.00 | 1.00 | 2.00 | 2.00 | 2.00 | 1.00 | 1.00 | 1.00 |
| Upstream Filter(I) | 1.00 | 1.00 | 1.00 | 1.00 | 1.00 | 1.00 | 0.27 | 0.27 | 0.27 | 1.00 | 1.00 | 1.00 |
| Uniform Delay (d), s/veh | 72.0 | 57.6 | 66.5 | 66.2 | 56.2 | 55.8 | 29.1 | 2.0 | 2.0 | 23.5 | 41.4 | 30.4 |
| Incr Delay (d2), s/veh | 1.7 | 0.2 | 44.0 | 0.4 | 0.8 | 0.9 | 11.9 | 0.8 | 1.6 | 3.7 | 3.6 | 0.5 |
| Initial Q Delay(d3),s/veh | 0.0 | 0.0 | 0.0 | 0.0 | 0.0 | 0.0 | 0.0 | 0.0 | 0.0 | 0.0 | 0.0 | 0.0 |
| %ile BackOfQ(95%),veh/ln | 6.8 | 6.5 | 22.3 | 4.5 | 11.5 | 9.5 | 10.7 | 2.1 | 2.5 | 9.2 | 26.6 | 4.4 |
| Unsig. Movement Delay, s/veh | | | | | | | | | | | | |
| LnGrp Delay(d),s/veh | 73.6 | 57.9 | 110.5 | 66.6 | 57.1 | 56.7 | 41.1 | 2.8 | 3.6 | 27.1 | 45.1 | 30.8 |
| LnGrp LOS | E | E | F | E | E | E | D | A | A | C | D | C |
| Approach Vol, veh/h | | 668 | | | 469 | | | 2211 | | | 1421 | |
| Approach Delay, s/veh | | 84.9 | | | 59.5 | | | 9.6 | | | 41.3 | |
| Approach LOS | | F | | | E | | | A | | | D | |

| Timer - Assigned Phs | 1 | 2 | 3 | 4 | 5 | 6 | 7 | 8 |
|---|---|---|---|---|---|---|---|---|
| Phs Duration (G+Y+Rc), s | 20.0 | 84.1 | 24.9 | 36.0 | 31.2 | 72.8 | 20.0 | 40.9 |
| Change Period (Y+Rc), s | 5.0 | 5.0 | 5.0 | 5.0 | 5.0 | 5.0 | 5.0 | 5.0 |
| Max Green Setting (Gmax), s | 28.0 | 53.0 | 33.0 | 31.0 | 33.0 | 48.0 | 28.0 | 36.0 |
| Max Q Clear Time (g_c+I1), s | 14.1 | 10.4 | 7.5 | 31.9 | 25.5 | 45.6 | 10.3 | 16.7 |
| Green Ext Time (p_c), s | 0.5 | 18.1 | 0.4 | 0.0 | 0.7 | 1.6 | 0.5 | 1.5 |

**Intersection Summary**

| | |
|---|---|
| HCM 6th Ctrl Delay | 34.5 |
| HCM 6th LOS | C |

| Lane Group | EBL | EBT | EBR | WBL | WBT | WBR | NBL | NBT | SBL | SBT | SBR |
|---|---|---|---|---|---|---|---|---|---|---|---|
| Lane Configurations | | | | | | | | | | | |
| Traffic Volume (vph) | 154 | 168 | 246 | 108 | 162 | 128 | 322 | 1388 | 195 | 935 | 78 |
| Future Volume (vph) | 154 | 168 | 246 | 108 | 162 | 128 | 322 | 1388 | 195 | 935 | 78 |
| Turn Type | Prot | NA | pm+ov | Prot | NA | Perm | pm+pt | NA | pm+pt | NA | Perm |
| Protected Phases | 7 | 4 | 5 | 3 | 8 | | 5 | 2 | 1 | 6 | |
| Permitted Phases | | | 4 | | | 8 | 2 | | 6 | | 6 |
| Detector Phase | 7 | 4 | 5 | 3 | 8 | 8 | 5 | 2 | 1 | 6 | 6 |
| Switch Phase | | | | | | | | | | | |
| Minimum Initial (s) | 15.0 | 15.0 | 20.0 | 20.0 | 20.0 | 20.0 | 20.0 | 40.0 | 15.0 | 35.0 | 35.0 |
| Minimum Split (s) | 20.0 | 23.0 | 25.0 | 25.0 | 25.0 | 25.0 | 25.0 | 45.0 | 20.0 | 40.0 | 40.0 |
| Total Split (s) | 20.0 | 31.0 | 41.0 | 25.0 | 36.0 | 36.0 | 41.0 | 76.0 | 33.0 | 68.0 | 68.0 |
| Total Split (%) | 12.1% | 18.8% | 24.8% | 15.2% | 21.8% | 21.8% | 24.8% | 46.1% | 20.0% | 41.2% | 41.2% |
| Yellow Time (s) | 4.0 | 4.0 | 4.0 | 4.0 | 4.0 | 4.0 | 4.0 | 4.0 | 4.0 | 4.0 | 4.0 |
| All-Red Time (s) | 1.0 | 1.0 | 1.0 | 1.0 | 1.0 | 1.0 | 1.0 | 1.0 | 1.0 | 1.0 | 1.0 |
| Lost Time Adjust (s) | 0.0 | 0.0 | 0.0 | 0.0 | 0.0 | 0.0 | 0.0 | 0.0 | 0.0 | 0.0 | 0.0 |
| Total Lost Time (s) | 5.0 | 5.0 | 5.0 | 5.0 | 5.0 | 5.0 | 5.0 | 5.0 | 5.0 | 5.0 | 5.0 |
| Lead/Lag | Lead | Lag | Lead | Lead | Lag | Lag | Lead | Lag | Lead | Lag | Lag |
| Lead-Lag Optimize? | | | | | | | | | | | |
| Recall Mode | None | None | None | None | None | None | None | C-Max | None | C-Max | C-Max |

**Intersection Summary**

Cycle Length: 165
Actuated Cycle Length: 165
Offset: 40 (24%), Referenced to phase 2:NBTL and 6:SBTL, Start of Green
Natural Cycle: 115
Control Type: Actuated-Coordinated
Description: Wellness Way (Herrera)

Splits and Phases: 2: Cerrillos Rd. & Herrera Dr./Wellness Way








| Movement | EBL | EBT | EBR | WBL | WBT | WBR | NBL | NBT | NBR | SBL | SBT | SBR |
|---|---|---|---|---|---|---|---|---|---|---|---|---|
| Lane Configurations | | | | | | | | | | | | |
| Traffic Volume (veh/h) | 154 | 168 | 246 | 108 | 162 | 128 | 322 | 1388 | 169 | 195 | 935 | 78 |
| Future Volume (veh/h) | 154 | 168 | 246 | 108 | 162 | 128 | 322 | 1388 | 169 | 195 | 935 | 78 |
| Initial Q (Qb), veh | 0 | 0 | 0 | 0 | 0 | 0 | 0 | 0 | 0 | 0 | 0 | 0 |
| Ped-Bike Adj(A_pbT) | 1.00 | | 1.00 | 1.00 | | 1.00 | 1.00 | | 1.00 | 1.00 | | 1.00 |
| Parking Bus, Adj | 1.00 | 1.00 | 1.00 | 1.00 | 1.00 | 1.00 | 1.00 | 1.00 | 1.00 | 1.00 | 1.00 | 1.00 |
| Work Zone On Approach | | No | | | No | | | No | | | No | |
| Adj Sat Flow, veh/h/ln | 1870 | 1870 | 1870 | 1870 | 1870 | 1870 | 1870 | 1870 | 1870 | 1870 | 1870 | 1870 |
| Adj Flow Rate, veh/h | 181 | 198 | 289 | 127 | 191 | 151 | 379 | 1633 | 199 | 229 | 1100 | 92 |
| Peak Hour Factor | 0.85 | 0.85 | 0.85 | 0.85 | 0.85 | 0.85 | 0.85 | 0.85 | 0.85 | 0.85 | 0.85 | 0.85 |
| Percent Heavy Veh, % | 2 | 2 | 2 | 2 | 2 | 2 | 2 | 2 | 2 | 2 | 2 | 2 |
| Cap, veh/h | 314 | 560 | 474 | 418 | 351 | 297 | 397 | 2350 | 286 | 322 | 1631 | 727 |
| Arrive On Green | 0.09 | 0.16 | 0.16 | 0.12 | 0.19 | 0.19 | 0.28 | 1.00 | 1.00 | 0.09 | 0.46 | 0.46 |
| Sat Flow, veh/h | 3456 | 3554 | 1585 | 3456 | 1870 | 1585 | 1781 | 4613 | 561 | 1781 | 3554 | 1585 |
| Grp Volume(v), veh/h | 181 | 198 | 289 | 127 | 191 | 151 | 379 | 1204 | 628 | 229 | 1100 | 92 |
| Grp Sat Flow(s),veh/h/ln | 1728 | 1777 | 1585 | 1728 | 1870 | 1585 | 1781 | 1702 | 1769 | 1781 | 1777 | 1585 |
| Q Serve(g_s), s | 8.3 | 8.2 | 25.8 | 5.5 | 15.2 | 14.1 | 20.4 | 0.0 | 0.0 | 11.0 | 40.0 | 5.5 |
| Cycle Q Clear(g_c), s | 8.3 | 8.2 | 25.8 | 5.5 | 15.2 | 14.1 | 20.4 | 0.0 | 0.0 | 11.0 | 40.0 | 5.5 |
| Prop In Lane | 1.00 | | 1.00 | 1.00 | | 1.00 | 1.00 | | 0.32 | 1.00 | | 1.00 |
| Lane Grp Cap(c), veh/h | 314 | 560 | 474 | 418 | 351 | 297 | 397 | 1734 | 901 | 322 | 1631 | 727 |
| V/C Ratio(X) | 0.58 | 0.35 | 0.61 | 0.30 | 0.54 | 0.51 | 0.95 | 0.69 | 0.70 | 0.71 | 0.67 | 0.13 |
| Avail Cap(c_a), veh/h | 314 | 560 | 474 | 419 | 351 | 298 | 534 | 1734 | 901 | 462 | 1631 | 727 |
| HCM Platoon Ratio | 1.00 | 1.00 | 1.00 | 1.00 | 1.00 | 1.00 | 2.00 | 2.00 | 2.00 | 1.00 | 1.00 | 1.00 |
| Upstream Filter(I) | 1.00 | 1.00 | 1.00 | 1.00 | 1.00 | 1.00 | 0.48 | 0.48 | 0.48 | 1.00 | 1.00 | 1.00 |
| Uniform Delay (d), s/veh | 72.0 | 62.0 | 49.6 | 66.2 | 60.7 | 60.2 | 24.9 | 0.0 | 0.0 | 19.2 | 35.0 | 25.6 |
| Incr Delay (d2), s/veh | 2.6 | 0.4 | 2.3 | 0.4 | 1.7 | 1.4 | 14.5 | 1.1 | 2.2 | 2.9 | 2.3 | 0.4 |
| Initial Q Delay(d3),s/veh | 0.0 | 0.0 | 0.0 | 0.0 | 0.0 | 0.0 | 0.0 | 0.0 | 0.0 | 0.0 | 0.0 | 0.0 |
| %ile BackOfQ(95%),veh/ln | 6.9 | 6.8 | 16.0 | 4.5 | 12.0 | 9.8 | 10.4 | 0.5 | 1.0 | 8.3 | 24.3 | 4.0 |
| Unsig. Movement Delay, s/veh | | | | | | | | | | | | |
| LnGrp Delay(d),s/veh | 74.5 | 62.4 | 51.8 | 66.6 | 62.4 | 61.6 | 39.4 | 1.1 | 2.2 | 22.1 | 37.2 | 26.0 |
| LnGrp LOS | E | E | D | E | E | E | D | A | A | C | D | C |
| Approach Vol, veh/h | | 668 | | | 469 | | | 2211 | | | 1421 | |
| Approach Delay, s/veh | | 61.1 | | | 63.3 | | | 8.0 | | | 34.1 | |
| Approach LOS | | E | | | E | | | A | | | C | |

| Timer - Assigned Phs | 1 | 2 | 3 | 4 | 5 | 6 | 7 | 8 |
|---|---|---|---|---|---|---|---|---|
| Phs Duration (G+Y+Rc), s | 20.0 | 89.1 | 24.9 | 31.0 | 28.3 | 80.7 | 20.0 | 35.9 |
| Change Period (Y+Rc), s | 5.0 | 5.0 | 5.0 | 5.0 | 5.0 | 5.0 | 5.0 | 5.0 |
| Max Green Setting (Gmax), s | 28.0 | 71.0 | 20.0 | 26.0 | 36.0 | 63.0 | 15.0 | 31.0 |
| Max Q Clear Time (g_c+I1), s | 13.0 | 2.0 | 7.5 | 27.8 | 22.4 | 42.0 | 10.3 | 17.2 |
| Green Ext Time (p_c), s | 0.5 | 20.7 | 0.3 | 0.0 | 0.9 | 7.8 | 0.2 | 1.3 |

**Intersection Summary**

| | |
|---|---|
| HCM 6th Ctrl Delay | 28.6 |
| HCM 6th LOS | C |

| Lane Group | EBL | EBT | EBR | WBL | WBT | WBR | NBL | NBT | SBL | SBT | SBR |
|---|---|---|---|---|---|---|---|---|---|---|---|
| Lane Configurations | | | | | | | | | | | |
| Traffic Volume (vph) | 106 | 112 | 251 | 159 | 141 | 158 | 288 | 1220 | 76 | 1515 | 67 |
| Future Volume (vph) | 106 | 112 | 251 | 159 | 141 | 158 | 288 | 1220 | 76 | 1515 | 67 |
| Turn Type | Prot | NA | Perm | Prot | NA | Perm | pm+pt | NA | pm+pt | NA | Perm |
| Protected Phases | 7 | 4 | | 3 | 8 | | 5 | 2 | 1 | 6 | |
| Permitted Phases | | | 4 | | | 8 | 2 | | 6 | | 6 |
| Detector Phase | 7 | 4 | 4 | 3 | 8 | 8 | 5 | 2 | 1 | 6 | 6 |
| Switch Phase | | | | | | | | | | | |
| Minimum Initial (s) | 15.0 | 15.0 | 15.0 | 20.0 | 20.0 | 20.0 | 20.0 | 40.0 | 15.0 | 35.0 | 35.0 |
| Minimum Split (s) | 20.0 | 23.0 | 23.0 | 25.0 | 25.0 | 25.0 | 25.0 | 45.0 | 20.0 | 40.0 | 40.0 |
| Total Split (s) | 25.0 | 25.0 | 25.0 | 30.0 | 30.0 | 30.0 | 30.0 | 105.0 | 25.0 | 100.0 | 100.0 |
| Total Split (%) | 13.5% | 13.5% | 13.5% | 16.2% | 16.2% | 16.2% | 16.2% | 56.8% | 13.5% | 54.1% | 54.1% |
| Yellow Time (s) | 4.0 | 4.0 | 4.0 | 4.0 | 4.0 | 4.0 | 4.0 | 4.0 | 4.0 | 4.0 | 4.0 |
| All-Red Time (s) | 1.0 | 1.0 | 1.0 | 1.0 | 1.0 | 1.0 | 1.0 | 1.0 | 1.0 | 1.0 | 1.0 |
| Lost Time Adjust (s) | 0.0 | 0.0 | 0.0 | 0.0 | 0.0 | 0.0 | 0.0 | 0.0 | 0.0 | 0.0 | 0.0 |
| Total Lost Time (s) | 5.0 | 5.0 | 5.0 | 5.0 | 5.0 | 5.0 | 5.0 | 5.0 | 5.0 | 5.0 | 5.0 |
| Lead/Lag | Lead | Lag | Lag | Lead | Lag | Lag | Lead | Lag | Lead | Lag | Lag |
| Lead-Lag Optimize? | | | | | | | | | | | |
| Recall Mode | None | None | None | None | None | None | None | C-Max | None | C-Max | C-Max |

**Intersection Summary**

Cycle Length: 185
Actuated Cycle Length: 185
Offset: 60 (32%), Referenced to phase 2:NBTL and 6:SBTL, Start of Green
Natural Cycle: 125
Control Type: Actuated-Coordinated
Description: Wellness Way (Herrera)

Splits and Phases: 2: Cerrillos Rd. & Herrera Dr./Wellness Way








| Movement | EBL | EBT | EBR | WBL | WBT | WBR | NBL | NBT | NBR | SBL | SBT | SBR |
|---|---|---|---|---|---|---|---|---|---|---|---|---|
| Lane Configurations | | | | | | | | | | | | |
| Traffic Volume (veh/h) | 106 | 112 | 251 | 159 | 141 | 158 | 288 | 1220 | 121 | 76 | 1515 | 67 |
| Future Volume (veh/h) | 106 | 112 | 251 | 159 | 141 | 158 | 288 | 1220 | 121 | 76 | 1515 | 67 |
| Initial Q (Qb), veh | 0 | 0 | 0 | 0 | 0 | 0 | 0 | 0 | 0 | 0 | 0 | 0 |
| Ped-Bike Adj(A_pbT) | 1.00 | | 1.00 | 1.00 | | 1.00 | 1.00 | | 1.00 | 1.00 | | 1.00 |
| Parking Bus, Adj | 1.00 | 1.00 | 1.00 | 1.00 | 1.00 | 1.00 | 1.00 | 1.00 | 1.00 | 1.00 | 1.00 | 1.00 |
| Work Zone On Approach | | No | | | No | | | No | | | No | |
| Adj Sat Flow, veh/h/ln | 1870 | 1870 | 1870 | 1870 | 1870 | 1870 | 1870 | 1870 | 1870 | 1870 | 1870 | 1870 |
| Adj Flow Rate, veh/h | 112 | 118 | 264 | 167 | 148 | 166 | 303 | 1284 | 127 | 80 | 1595 | 71 |
| Peak Hour Factor | 0.95 | 0.95 | 0.95 | 0.95 | 0.95 | 0.95 | 0.95 | 0.95 | 0.95 | 0.95 | 0.95 | 0.95 |
| Percent Heavy Veh, % | 2 | 2 | 2 | 2 | 2 | 2 | 2 | 2 | 2 | 2 | 2 | 2 |
| Cap, veh/h | 279 | 384 | 171 | 374 | 253 | 215 | 317 | 2815 | 278 | 391 | 1956 | 873 |
| Arrive On Green | 0.08 | 0.11 | 0.11 | 0.11 | 0.14 | 0.14 | 0.25 | 1.00 | 1.00 | 0.08 | 0.55 | 0.55 |
| Sat Flow, veh/h | 3456 | 3554 | 1585 | 3456 | 1870 | 1585 | 1781 | 4723 | 467 | 1781 | 3554 | 1585 |
| Grp Volume(v), veh/h | 112 | 118 | 264 | 167 | 148 | 166 | 303 | 925 | 486 | 80 | 1595 | 71 |
| Grp Sat Flow(s),veh/h/ln | 1728 | 1777 | 1585 | 1728 | 1870 | 1585 | 1781 | 1702 | 1786 | 1781 | 1777 | 1585 |
| Q Serve(g_s), s | 5.7 | 5.7 | 20.0 | 8.4 | 13.7 | 18.7 | 21.0 | 0.0 | 0.0 | 3.2 | 67.7 | 3.9 |
| Cycle Q Clear(g_c), s | 5.7 | 5.7 | 20.0 | 8.4 | 13.7 | 18.7 | 21.0 | 0.0 | 0.0 | 3.2 | 67.7 | 3.9 |
| Prop In Lane | 1.00 | | 1.00 | 1.00 | | 1.00 | 1.00 | | 0.26 | 1.00 | | 1.00 |
| Lane Grp Cap(c), veh/h | 279 | 384 | 171 | 374 | 253 | 215 | 317 | 2029 | 1065 | 391 | 1956 | 873 |
| V/C Ratio(X) | 0.40 | 0.31 | 1.54 | 0.45 | 0.58 | 0.77 | 0.96 | 0.46 | 0.46 | 0.20 | 0.82 | 0.08 |
| Avail Cap(c_a), veh/h | 374 | 384 | 171 | 467 | 253 | 215 | 335 | 2029 | 1065 | 441 | 1956 | 873 |
| HCM Platoon Ratio | 1.00 | 1.00 | 1.00 | 1.00 | 1.00 | 1.00 | 2.00 | 2.00 | 2.00 | 1.00 | 1.00 | 1.00 |
| Upstream Filter(I) | 1.00 | 1.00 | 1.00 | 1.00 | 1.00 | 1.00 | 0.76 | 0.76 | 0.76 | 1.00 | 1.00 | 1.00 |
| Uniform Delay (d), s/veh | 80.8 | 76.1 | 82.5 | 77.3 | 75.1 | 77.2 | 44.2 | 0.0 | 0.0 | 13.2 | 33.9 | 19.6 |
| Incr Delay (d2), s/veh | 0.9 | 0.4 | 270.2 | 0.8 | 3.4 | 16.0 | 31.1 | 0.6 | 1.1 | 0.3 | 3.9 | 0.2 |
| Initial Q Delay(d3),s/veh | 0.0 | 0.0 | 0.0 | 0.0 | 0.0 | 0.0 | 0.0 | 0.0 | 0.0 | 0.0 | 0.0 | 0.0 |
| %ile BackOfQ(50%),veh/ln | 2.6 | 2.6 | 21.1 | 3.8 | 6.9 | 8.7 | 14.7 | 0.2 | 0.3 | 1.3 | 29.3 | 1.5 |
| Unsig. Movement Delay, s/veh | | | | | | | | | | | | |
| LnGrp Delay(d),s/veh | 81.7 | 76.6 | 352.7 | 78.2 | 78.5 | 93.2 | 75.3 | 0.6 | 1.1 | 13.5 | 37.8 | 19.7 |
| LnGrp LOS | F | E | F | E | E | F | E | A | A | B | D | B |
| Approach Vol, veh/h | | 494 | | | 481 | | | 1714 | | | 1746 | |
| Approach Delay, s/veh | | 225.3 | | | 83.5 | | | 13.9 | | | 35.9 | |
| Approach LOS | | F | | | F | | | B | | | D | |

| Timer - Assigned Phs | 1 | 2 | 3 | 4 | 5 | 6 | 7 | 8 |
|---|---|---|---|---|---|---|---|---|
| Phs Duration (G+Y+Rc), s | 19.8 | 115.2 | 25.0 | 25.0 | 28.2 | 106.8 | 20.0 | 30.0 |
| Change Period (Y+Rc), s | 5.0 | 5.0 | 5.0 | 5.0 | 5.0 | 5.0 | 5.0 | 5.0 |
| Max Green Setting (Gmax), s | 20.0 | 100.0 | 25.0 | 20.0 | 25.0 | 95.0 | 20.0 | 25.0 |
| Max Q Clear Time (g_c+I1), s | 5.2 | 2.0 | 10.4 | 22.0 | 23.0 | 69.7 | 7.7 | 20.7 |
| Green Ext Time (p_c), s | 0.1 | 12.8 | 0.4 | 0.0 | 0.2 | 13.4 | 0.2 | 0.5 |

**Intersection Summary**

HCM 6th Ctrl Delay 53.7
HCM 6th LOS D

| Lane Group | EBL | EBT | EBR | WBL | WBT | WBR | NBL | NBT | SBL | SBT | SBR |
|---|---|---|---|---|---|---|---|---|---|---|---|
| Lane Configurations | | | | | | | | | | | |
| Traffic Volume (vph) | 106 | 112 | 251 | 159 | 141 | 158 | 288 | 1220 | 76 | 1515 | 67 |
| Future Volume (vph) | 106 | 112 | 251 | 159 | 141 | 158 | 288 | 1220 | 76 | 1515 | 67 |
| Turn Type | Prot | NA | pm+ov | Prot | NA | pm+ov | pm+pt | NA | pm+pt | NA | Perm |
| Protected Phases | 7 | 4 | 5 | 3 | 8 | 1 | 5 | 2 | 1 | 6 | |
| Permitted Phases | | | 4 | | | 8 | 2 | | 6 | | 6 |
| Detector Phase | 7 | 4 | 5 | 3 | 8 | 1 | 5 | 2 | 1 | 6 | 6 |
| Switch Phase | | | | | | | | | | | |
| Minimum Initial (s) | 15.0 | 15.0 | 20.0 | 20.0 | 20.0 | 15.0 | 20.0 | 40.0 | 15.0 | 35.0 | 35.0 |
| Minimum Split (s) | 20.0 | 23.0 | 25.0 | 25.0 | 25.0 | 20.0 | 25.0 | 45.0 | 20.0 | 40.0 | 40.0 |
| Total Split (s) | 25.0 | 25.0 | 30.0 | 30.0 | 30.0 | 25.0 | 30.0 | 105.0 | 25.0 | 100.0 | 100.0 |
| Total Split (%) | 13.5% | 13.5% | 16.2% | 16.2% | 16.2% | 13.5% | 16.2% | 56.8% | 13.5% | 54.1% | 54.1% |
| Yellow Time (s) | 4.0 | 4.0 | 4.0 | 4.0 | 4.0 | 4.0 | 4.0 | 4.0 | 4.0 | 4.0 | 4.0 |
| All-Red Time (s) | 1.0 | 1.0 | 1.0 | 1.0 | 1.0 | 1.0 | 1.0 | 1.0 | 1.0 | 1.0 | 1.0 |
| Lost Time Adjust (s) | 0.0 | 0.0 | 0.0 | 0.0 | 0.0 | 0.0 | 0.0 | 0.0 | 0.0 | 0.0 | 0.0 |
| Total Lost Time (s) | 5.0 | 5.0 | 5.0 | 5.0 | 5.0 | 5.0 | 5.0 | 5.0 | 5.0 | 5.0 | 5.0 |
| Lead/Lag | Lead | Lag | Lead | Lead | Lag | Lead | Lead | Lag | Lead | Lag | Lag |
| Lead-Lag Optimize? | | | | | | | | | | | |
| Recall Mode | None | None | None | None | None | None | None | C-Max | None | C-Max | C-Max |

**Intersection Summary**

Cycle Length: 185
Actuated Cycle Length: 185
Offset: 60 (32%), Referenced to phase 2:NBTL and 6:SBTL, Start of Green
Natural Cycle: 125
Control Type: Actuated-Coordinated
Description: Wellness Way (Herrera)

Splits and Phases: 2: Cerrillos Rd. & Herrera Dr./Wellness Way








| Movement | EBL | EBT | EBR | WBL | WBT | WBR | NBL | NBT | NBR | SBL | SBT | SBR |
|---|---|---|---|---|---|---|---|---|---|---|---|---|
| Lane Configurations | | | | | | | | | | | | |
| Traffic Volume (veh/h) | 106 | 112 | 251 | 159 | 141 | 158 | 288 | 1220 | 121 | 76 | 1515 | 67 |
| Future Volume (veh/h) | 106 | 112 | 251 | 159 | 141 | 158 | 288 | 1220 | 121 | 76 | 1515 | 67 |
| Initial Q (Qb), veh | 0 | 0 | 0 | 0 | 0 | 0 | 0 | 0 | 0 | 0 | 0 | 0 |
| Ped-Bike Adj(A_pbT) | 1.00 | | 1.00 | 1.00 | | 1.00 | 1.00 | | 1.00 | 1.00 | | 1.00 |
| Parking Bus, Adj | 1.00 | 1.00 | 1.00 | 1.00 | 1.00 | 1.00 | 1.00 | 1.00 | 1.00 | 1.00 | 1.00 | 1.00 |
| Work Zone On Approach | | No | | | No | | | No | | | No | |
| Adj Sat Flow, veh/h/ln | 1870 | 1870 | 1870 | 1870 | 1870 | 1870 | 1870 | 1870 | 1870 | 1870 | 1870 | 1870 |
| Adj Flow Rate, veh/h | 112 | 118 | 264 | 167 | 148 | 166 | 303 | 1284 | 127 | 80 | 1595 | 71 |
| Peak Hour Factor | 0.95 | 0.95 | 0.95 | 0.95 | 0.95 | 0.95 | 0.95 | 0.95 | 0.95 | 0.95 | 0.95 | 0.95 |
| Percent Heavy Veh, % | 2 | 2 | 2 | 2 | 2 | 2 | 2 | 2 | 2 | 2 | 2 | 2 |
| Cap, veh/h | 279 | 384 | 370 | 374 | 253 | 341 | 317 | 2815 | 278 | 391 | 1956 | 873 |
| Arrive On Green | 0.08 | 0.11 | 0.11 | 0.11 | 0.14 | 0.14 | 0.25 | 1.00 | 1.00 | 0.08 | 0.55 | 0.55 |
| Sat Flow, veh/h | 3456 | 3554 | 1585 | 3456 | 1870 | 1585 | 1781 | 4723 | 467 | 1781 | 3554 | 1585 |
| Grp Volume(v), veh/h | 112 | 118 | 264 | 167 | 148 | 166 | 303 | 925 | 486 | 80 | 1595 | 71 |
| Grp Sat Flow(s),veh/h/ln | 1728 | 1777 | 1585 | 1728 | 1870 | 1585 | 1781 | 1702 | 1786 | 1781 | 1777 | 1585 |
| Q Serve(g_s), s | 5.7 | 5.7 | 20.0 | 8.4 | 13.7 | 17.0 | 21.0 | 0.0 | 0.0 | 3.2 | 67.7 | 3.9 |
| Cycle Q Clear(g_c), s | 5.7 | 5.7 | 20.0 | 8.4 | 13.7 | 17.0 | 21.0 | 0.0 | 0.0 | 3.2 | 67.7 | 3.9 |
| Prop In Lane | 1.00 | | 1.00 | 1.00 | | 1.00 | 1.00 | | 0.26 | 1.00 | | 1.00 |
| Lane Grp Cap(c), veh/h | 279 | 384 | 370 | 374 | 253 | 341 | 317 | 2029 | 1065 | 391 | 1956 | 873 |
| V/C Ratio(X) | 0.40 | 0.31 | 0.71 | 0.45 | 0.58 | 0.49 | 0.96 | 0.46 | 0.46 | 0.20 | 0.82 | 0.08 |
| Avail Cap(c_a), veh/h | 374 | 384 | 370 | 467 | 253 | 341 | 335 | 2029 | 1065 | 441 | 1956 | 873 |
| HCM Platoon Ratio | 1.00 | 1.00 | 1.00 | 1.00 | 1.00 | 1.00 | 2.00 | 2.00 | 2.00 | 1.00 | 1.00 | 1.00 |
| Upstream Filter(I) | 1.00 | 1.00 | 1.00 | 1.00 | 1.00 | 1.00 | 0.82 | 0.82 | 0.82 | 1.00 | 1.00 | 1.00 |
| Uniform Delay (d), s/veh | 80.8 | 76.1 | 65.2 | 77.3 | 75.1 | 63.6 | 44.2 | 0.0 | 0.0 | 13.2 | 33.9 | 19.6 |
| Incr Delay (d2), s/veh | 0.9 | 0.4 | 6.4 | 0.8 | 3.4 | 1.1 | 32.6 | 0.6 | 1.2 | 0.3 | 3.9 | 0.2 |
| Initial Q Delay(d3),s/veh | 0.0 | 0.0 | 0.0 | 0.0 | 0.0 | 0.0 | 0.0 | 0.0 | 0.0 | 0.0 | 0.0 | 0.0 |
| %ile BackOfQ(50%),veh/ln | 2.6 | 2.6 | 12.2 | 3.8 | 6.9 | 7.0 | 14.8 | 0.2 | 0.3 | 1.3 | 29.3 | 1.5 |
| Unsig. Movement Delay, s/veh | | | | | | | | | | | | |
| LnGrp Delay(d),s/veh | 81.7 | 76.6 | 71.6 | 78.2 | 78.5 | 64.7 | 76.8 | 0.6 | 1.2 | 13.5 | 37.8 | 19.7 |
| LnGrp LOS | F | E | E | E | E | E | E | A | A | B | D | B |
| Approach Vol, veh/h | | 494 | | | 481 | | | 1714 | | | 1746 | |
| Approach Delay, s/veh | | 75.1 | | | 73.6 | | | 14.2 | | | 35.9 | |
| Approach LOS | | E | | | E | | | B | | | D | |

| Timer - Assigned Phs | 1 | 2 | 3 | 4 | 5 | 6 | 7 | 8 |
|---|---|---|---|---|---|---|---|---|
| Phs Duration (G+Y+Rc), s | 19.8 | 115.2 | 25.0 | 25.0 | 28.2 | 106.8 | 20.0 | 30.0 |
| Change Period (Y+Rc), s | 5.0 | 5.0 | 5.0 | 5.0 | 5.0 | 5.0 | 5.0 | 5.0 |
| Max Green Setting (Gmax), s | 20.0 | 100.0 | 25.0 | 20.0 | 25.0 | 95.0 | 20.0 | 25.0 |
| Max Q Clear Time (g_c+I1), s | 5.2 | 2.0 | 10.4 | 22.0 | 23.0 | 69.7 | 7.7 | 19.0 |
| Green Ext Time (p_c), s | 0.1 | 12.8 | 0.4 | 0.0 | 0.2 | 13.4 | 0.2 | 0.7 |

**Intersection Summary**

| | |
|---|---|
| HCM 6th Ctrl Delay | 36.0 |
| HCM 6th LOS | D |

| Lane Group | EBL | EBT | EBR | WBL | WBT | WBR | NBL | NBT | SBL | SBT | SBR |
|---|---|---|---|---|---|---|---|---|---|---|---|
| Lane Configurations | | | | | | | | | | | |
| Traffic Volume (vph) | 106 | 140 | 268 | 159 | 177 | 259 | 288 | 1230 | 175 | 1580 | 67 |
| Future Volume (vph) | 106 | 140 | 268 | 159 | 177 | 259 | 288 | 1230 | 175 | 1580 | 67 |
| Turn Type | Prot | NA | Perm | Prot | NA | Perm | pm+pt | NA | pm+pt | NA | Perm |
| Protected Phases | 7 | 4 | | 3 | 8 | | 5 | 2 | 1 | 6 | |
| Permitted Phases | | | 4 | | | 8 | 2 | | 6 | | 6 |
| Detector Phase | 7 | 4 | 4 | 3 | 8 | 8 | 5 | 2 | 1 | 6 | 6 |
| Switch Phase | | | | | | | | | | | |
| Minimum Initial (s) | 15.0 | 15.0 | 15.0 | 20.0 | 20.0 | 20.0 | 20.0 | 40.0 | 15.0 | 35.0 | 35.0 |
| Minimum Split (s) | 20.0 | 23.0 | 23.0 | 25.0 | 25.0 | 25.0 | 25.0 | 45.0 | 20.0 | 40.0 | 40.0 |
| Total Split (s) | 25.0 | 25.0 | 25.0 | 30.0 | 30.0 | 30.0 | 30.0 | 105.0 | 25.0 | 100.0 | 100.0 |
| Total Split (%) | 13.5% | 13.5% | 13.5% | 16.2% | 16.2% | 16.2% | 16.2% | 56.8% | 13.5% | 54.1% | 54.1% |
| Yellow Time (s) | 4.0 | 4.0 | 4.0 | 4.0 | 4.0 | 4.0 | 4.0 | 4.0 | 4.0 | 4.0 | 4.0 |
| All-Red Time (s) | 1.0 | 1.0 | 1.0 | 1.0 | 1.0 | 1.0 | 1.0 | 1.0 | 1.0 | 1.0 | 1.0 |
| Lost Time Adjust (s) | 0.0 | 0.0 | 0.0 | 0.0 | 0.0 | 0.0 | 0.0 | 0.0 | 0.0 | 0.0 | 0.0 |
| Total Lost Time (s) | 5.0 | 5.0 | 5.0 | 5.0 | 5.0 | 5.0 | 5.0 | 5.0 | 5.0 | 5.0 | 5.0 |
| Lead/Lag | Lead | Lag | Lag | Lead | Lag | Lag | Lead | Lag | Lead | Lag | Lag |
| Lead-Lag Optimize? | | | | | | | | | | | |
| Recall Mode | None | None | None | None | None | None | None | C-Max | None | C-Max | C-Max |

**Intersection Summary**

Cycle Length: 185
Actuated Cycle Length: 185
Offset: 60 (32%), Referenced to phase 2:NBTL and 6:SBTL, Start of Green
Natural Cycle: 125
Control Type: Actuated-Coordinated
Description: Wellness Way (Herrera)

Splits and Phases: 2: Cerrillos Rd. & Herrera Dr./Wellness Way








| Movement | EBL | EBT | EBR | WBL | WBT | WBR | NBL | NBT | NBR | SBL | SBT | SBR |
|---|---|---|---|---|---|---|---|---|---|---|---|---|
| Lane Configurations | | | | | | | | | | | | |
| Traffic Volume (veh/h) | 106 | 140 | 268 | 159 | 177 | 259 | 288 | 1230 | 121 | 175 | 1580 | 67 |
| Future Volume (veh/h) | 106 | 140 | 268 | 159 | 177 | 259 | 288 | 1230 | 121 | 175 | 1580 | 67 |
| Initial Q (Qb), veh | 0 | 0 | 0 | 0 | 0 | 0 | 0 | 0 | 0 | 0 | 0 | 0 |
| Ped-Bike Adj(A_pbT) | 1.00 | | 1.00 | 1.00 | | 1.00 | 1.00 | | 1.00 | 1.00 | | 1.00 |
| Parking Bus, Adj | 1.00 | 1.00 | 1.00 | 1.00 | 1.00 | 1.00 | 1.00 | 1.00 | 1.00 | 1.00 | 1.00 | 1.00 |
| Work Zone On Approach | | No | | | No | | | No | | | No | |
| Adj Sat Flow, veh/h/ln | 1870 | 1870 | 1870 | 1870 | 1870 | 1870 | 1870 | 1870 | 1870 | 1870 | 1870 | 1870 |
| Adj Flow Rate, veh/h | 112 | 147 | 282 | 167 | 186 | 273 | 303 | 1295 | 127 | 184 | 1663 | 71 |
| Peak Hour Factor | 0.95 | 0.95 | 0.95 | 0.95 | 0.95 | 0.95 | 0.95 | 0.95 | 0.95 | 0.95 | 0.95 | 0.95 |
| Percent Heavy Veh, % | 2 | 2 | 2 | 2 | 2 | 2 | 2 | 2 | 2 | 2 | 2 | 2 |
| Cap, veh/h | 279 | 384 | 171 | 374 | 253 | 215 | 316 | 2811 | 276 | 388 | 1926 | 859 |
| Arrive On Green | 0.08 | 0.11 | 0.11 | 0.11 | 0.14 | 0.14 | 0.27 | 1.00 | 1.00 | 0.08 | 0.54 | 0.54 |
| Sat Flow, veh/h | 3456 | 3554 | 1585 | 3456 | 1870 | 1585 | 1781 | 4727 | 464 | 1781 | 3554 | 1585 |
| Grp Volume(v), veh/h | 112 | 147 | 282 | 167 | 186 | 273 | 303 | 932 | 490 | 184 | 1663 | 71 |
| Grp Sat Flow(s),veh/h/ln | 1728 | 1777 | 1585 | 1728 | 1870 | 1585 | 1781 | 1702 | 1787 | 1781 | 1777 | 1585 |
| Q Serve(g_s), s | 5.7 | 7.1 | 20.0 | 8.4 | 17.7 | 25.0 | 22.7 | 0.0 | 0.0 | 8.0 | 74.5 | 4.0 |
| Cycle Q Clear(g_c), s | 5.7 | 7.1 | 20.0 | 8.4 | 17.7 | 25.0 | 22.7 | 0.0 | 0.0 | 8.0 | 74.5 | 4.0 |
| Prop In Lane | 1.00 | | 1.00 | 1.00 | | 1.00 | 1.00 | | 0.26 | 1.00 | | 1.00 |
| Lane Grp Cap(c), veh/h | 279 | 384 | 171 | 374 | 253 | 215 | 316 | 2024 | 1063 | 388 | 1926 | 859 |
| V/C Ratio(X) | 0.40 | 0.38 | 1.65 | 0.45 | 0.73 | 1.27 | 0.96 | 0.46 | 0.46 | 0.47 | 0.86 | 0.08 |
| Avail Cap(c_a), veh/h | 374 | 384 | 171 | 467 | 253 | 215 | 318 | 2024 | 1063 | 436 | 1926 | 859 |
| HCM Platoon Ratio | 1.00 | 1.00 | 1.00 | 1.00 | 1.00 | 1.00 | 2.00 | 2.00 | 2.00 | 1.00 | 1.00 | 1.00 |
| Upstream Filter(I) | 1.00 | 1.00 | 1.00 | 1.00 | 1.00 | 1.00 | 0.74 | 0.74 | 0.74 | 1.00 | 1.00 | 1.00 |
| Uniform Delay (d), s/veh | 80.8 | 76.8 | 82.5 | 77.3 | 76.8 | 80.0 | 47.6 | 0.0 | 0.0 | 14.7 | 36.5 | 20.3 |
| Incr Delay (d2), s/veh | 0.9 | 0.6 | 315.2 | 0.8 | 10.6 | 153.8 | 32.8 | 0.6 | 1.1 | 0.9 | 5.4 | 0.2 |
| Initial Q Delay(d3),s/veh | 0.0 | 0.0 | 0.0 | 0.0 | 0.0 | 0.0 | 0.0 | 0.0 | 0.0 | 0.0 | 0.0 | 0.0 |
| %ile BackOfQ(95%),veh/ln | 4.7 | 6.0 | 36.6 | 6.9 | 14.3 | 29.6 | 20.3 | 0.3 | 0.6 | 6.0 | 42.1 | 2.8 |
| Unsig. Movement Delay, s/veh | | | | | | | | | | | | |
| LnGrp Delay(d),s/veh | 81.7 | 77.4 | 397.7 | 78.2 | 87.3 | 233.8 | 80.4 | 0.6 | 1.1 | 15.6 | 41.9 | 20.5 |
| LnGrp LOS | F | E | F | E | F | F | F | A | A | B | D | C |
| Approach Vol, veh/h | | 541 | | | 626 | | | 1725 | | | 1918 | |
| Approach Delay, s/veh | | 245.3 | | | 148.7 | | | 14.7 | | | 38.6 | |
| Approach LOS | | F | | | F | | | B | | | D | |

| Timer - Assigned Phs | 1 | 2 | 3 | 4 | 5 | 6 | 7 | 8 |
|---|---|---|---|---|---|---|---|---|
| Phs Duration (G+Y+Rc), s | 20.0 | 115.0 | 25.0 | 25.0 | 29.7 | 105.3 | 20.0 | 30.0 |
| Change Period (Y+Rc), s | 5.0 | 5.0 | 5.0 | 5.0 | 5.0 | 5.0 | 5.0 | 5.0 |
| Max Green Setting (Gmax), s | 20.0 | 100.0 | 25.0 | 20.0 | 25.0 | 95.0 | 20.0 | 25.0 |
| Max Q Clear Time (g_c+I1), s | 10.0 | 2.0 | 10.4 | 22.0 | 24.7 | 76.5 | 7.7 | 27.0 |
| Green Ext Time (p_c), s | 0.3 | 12.9 | 0.4 | 0.0 | 0.0 | 11.6 | 0.2 | 0.0 |

**Intersection Summary**

| | |
|---|---|
| HCM 6th Ctrl Delay | 67.6 |
| HCM 6th LOS | E |

| Lane Group | EBL | EBT | EBR | WBL | WBT | WBR | NBL | NBT | SBL | SBT | SBR |
|---|---|---|---|---|---|---|---|---|---|---|---|
| Lane Configurations | | | | | | | | | | | |
| Traffic Volume (vph) | 106 | 140 | 268 | 159 | 177 | 259 | 288 | 1230 | 175 | 1580 | 67 |
| Future Volume (vph) | 106 | 140 | 268 | 159 | 177 | 259 | 288 | 1230 | 175 | 1580 | 67 |
| Turn Type | Prot | NA | pm+ov | Prot | NA | pm+ov | pm+pt | NA | pm+pt | NA | Perm |
| Protected Phases | 7 | 4 | 5 | 3 | 8 | 1 | 5 | 2 | 1 | 6 | |
| Permitted Phases | | | 4 | | | 8 | 2 | | 6 | | 6 |
| Detector Phase | 7 | 4 | 5 | 3 | 8 | 1 | 5 | 2 | 1 | 6 | 6 |
| Switch Phase | | | | | | | | | | | |
| Minimum Initial (s) | 15.0 | 15.0 | 20.0 | 20.0 | 20.0 | 15.0 | 20.0 | 40.0 | 15.0 | 35.0 | 35.0 |
| Minimum Split (s) | 20.0 | 23.0 | 25.0 | 25.0 | 25.0 | 20.0 | 25.0 | 45.0 | 20.0 | 40.0 | 40.0 |
| Total Split (s) | 25.0 | 25.0 | 30.0 | 30.0 | 30.0 | 25.0 | 30.0 | 105.0 | 25.0 | 100.0 | 100.0 |
| Total Split (%) | 13.5% | 13.5% | 16.2% | 16.2% | 16.2% | 13.5% | 16.2% | 56.8% | 13.5% | 54.1% | 54.1% |
| Yellow Time (s) | 4.0 | 4.0 | 4.0 | 4.0 | 4.0 | 4.0 | 4.0 | 4.0 | 4.0 | 4.0 | 4.0 |
| All-Red Time (s) | 1.0 | 1.0 | 1.0 | 1.0 | 1.0 | 1.0 | 1.0 | 1.0 | 1.0 | 1.0 | 1.0 |
| Lost Time Adjust (s) | 0.0 | 0.0 | 0.0 | 0.0 | 0.0 | 0.0 | 0.0 | 0.0 | 0.0 | 0.0 | 0.0 |
| Total Lost Time (s) | 5.0 | 5.0 | 5.0 | 5.0 | 5.0 | 5.0 | 5.0 | 5.0 | 5.0 | 5.0 | 5.0 |
| Lead/Lag | Lead | Lag | Lead | Lead | Lag | Lead | Lead | Lag | Lead | Lag | Lag |
| Lead-Lag Optimize? | | | | | | | | | | | |
| Recall Mode | None | None | None | None | None | None | None | C-Max | None | C-Max | C-Max |

**Intersection Summary**

Cycle Length: 185
Actuated Cycle Length: 185
Offset: 60 (32%), Referenced to phase 2:NBTL and 6:SBTL, Start of Green
Natural Cycle: 125
Control Type: Actuated-Coordinated
Description: Wellness Way (Herrera)

Splits and Phases: 2: Cerrillos Rd. & Herrera Dr./Wellness Way








| Movement | EBL | EBT | EBR | WBL | WBT | WBR | NBL | NBT | NBR | SBL | SBT | SBR |
|---|---|---|---|---|---|---|---|---|---|---|---|---|
| Lane Configurations | | | | | | | | | | | | |
| Traffic Volume (veh/h) | 106 | 140 | 268 | 159 | 177 | 259 | 288 | 1230 | 121 | 175 | 1580 | 67 |
| Future Volume (veh/h) | 106 | 140 | 268 | 159 | 177 | 259 | 288 | 1230 | 121 | 175 | 1580 | 67 |
| Initial Q (Qb), veh | 0 | 0 | 0 | 0 | 0 | 0 | 0 | 0 | 0 | 0 | 0 | 0 |
| Ped-Bike Adj(A_pbT) | 1.00 | | 1.00 | 1.00 | | 1.00 | 1.00 | | 1.00 | 1.00 | | 1.00 |
| Parking Bus, Adj | 1.00 | 1.00 | 1.00 | 1.00 | 1.00 | 1.00 | 1.00 | 1.00 | 1.00 | 1.00 | 1.00 | 1.00 |
| Work Zone On Approach | | No | | | No | | | No | | | No | |
| Adj Sat Flow, veh/h/ln | 1870 | 1870 | 1870 | 1870 | 1870 | 1870 | 1870 | 1870 | 1870 | 1870 | 1870 | 1870 |
| Adj Flow Rate, veh/h | 112 | 147 | 282 | 167 | 186 | 273 | 303 | 1295 | 127 | 184 | 1663 | 71 |
| Peak Hour Factor | 0.95 | 0.95 | 0.95 | 0.95 | 0.95 | 0.95 | 0.95 | 0.95 | 0.95 | 0.95 | 0.95 | 0.95 |
| Percent Heavy Veh, % | 2 | 2 | 2 | 2 | 2 | 2 | 2 | 2 | 2 | 2 | 2 | 2 |
| Cap, veh/h | 279 | 384 | 383 | 374 | 253 | 343 | 316 | 2811 | 276 | 388 | 1926 | 859 |
| Arrive On Green | 0.08 | 0.11 | 0.11 | 0.11 | 0.14 | 0.14 | 0.27 | 1.00 | 1.00 | 0.08 | 0.54 | 0.54 |
| Sat Flow, veh/h | 3456 | 3554 | 1585 | 3456 | 1870 | 1585 | 1781 | 4727 | 464 | 1781 | 3554 | 1585 |
| Grp Volume(v), veh/h | 112 | 147 | 282 | 167 | 186 | 273 | 303 | 932 | 490 | 184 | 1663 | 71 |
| Grp Sat Flow(s),veh/h/ln | 1728 | 1777 | 1585 | 1728 | 1870 | 1585 | 1781 | 1702 | 1787 | 1781 | 1777 | 1585 |
| Q Serve(g_s), s | 5.7 | 7.1 | 20.0 | 8.4 | 17.7 | 25.0 | 22.7 | 0.0 | 0.0 | 8.0 | 74.5 | 4.0 |
| Cycle Q Clear(g_c), s | 5.7 | 7.1 | 20.0 | 8.4 | 17.7 | 25.0 | 22.7 | 0.0 | 0.0 | 8.0 | 74.5 | 4.0 |
| Prop In Lane | 1.00 | | 1.00 | 1.00 | | 1.00 | 1.00 | | 0.26 | 1.00 | | 1.00 |
| Lane Grp Cap(c), veh/h | 279 | 384 | 383 | 374 | 253 | 343 | 316 | 2024 | 1063 | 388 | 1926 | 859 |
| V/C Ratio(X) | 0.40 | 0.38 | 0.74 | 0.45 | 0.73 | 0.80 | 0.96 | 0.46 | 0.46 | 0.47 | 0.86 | 0.08 |
| Avail Cap(c_a), veh/h | 374 | 384 | 383 | 467 | 253 | 343 | 318 | 2024 | 1063 | 436 | 1926 | 859 |
| HCM Platoon Ratio | 1.00 | 1.00 | 1.00 | 1.00 | 1.00 | 1.00 | 2.00 | 2.00 | 2.00 | 1.00 | 1.00 | 1.00 |
| Upstream Filter(I) | 1.00 | 1.00 | 1.00 | 1.00 | 1.00 | 1.00 | 0.78 | 0.78 | 0.78 | 1.00 | 1.00 | 1.00 |
| Uniform Delay (d), s/veh | 80.8 | 76.8 | 64.7 | 77.3 | 76.8 | 68.6 | 47.6 | 0.0 | 0.0 | 14.7 | 36.5 | 20.3 |
| Incr Delay (d2), s/veh | 0.9 | 0.6 | 7.2 | 0.8 | 10.6 | 12.3 | 33.9 | 0.6 | 1.1 | 0.9 | 5.4 | 0.2 |
| Initial Q Delay(d3),s/veh | 0.0 | 0.0 | 0.0 | 0.0 | 0.0 | 0.0 | 0.0 | 0.0 | 0.0 | 0.0 | 0.0 | 0.0 |
| %ile BackOfQ(95%),veh/ln | 4.7 | 6.0 | 19.1 | 6.9 | 14.3 | 19.5 | 20.5 | 0.3 | 0.6 | 6.0 | 42.1 | 2.8 |
| Unsig. Movement Delay, s/veh | | | | | | | | | | | | |
| LnGrp Delay(d),s/veh | 81.7 | 77.4 | 71.9 | 78.2 | 87.3 | 80.9 | 81.5 | 0.6 | 1.1 | 15.6 | 41.9 | 20.5 |
| LnGrp LOS | F | E | E | E | F | F | F | A | A | B | D | C |
| Approach Vol, veh/h | | 541 | | | 626 | | | 1725 | | | 1918 | |
| Approach Delay, s/veh | | 75.4 | | | 82.1 | | | 14.9 | | | 38.6 | |
| Approach LOS | | E | | | F | | | B | | | D | |

| Timer - Assigned Phs | 1 | 2 | 3 | 4 | 5 | 6 | 7 | 8 |
|---|---|---|---|---|---|---|---|---|
| Phs Duration (G+Y+Rc), s | 20.0 | 115.0 | 25.0 | 25.0 | 29.7 | 105.3 | 20.0 | 30.0 |
| Change Period (Y+Rc), s | 5.0 | 5.0 | 5.0 | 5.0 | 5.0 | 5.0 | 5.0 | 5.0 |
| Max Green Setting (Gmax), s | 20.0 | 100.0 | 25.0 | 20.0 | 25.0 | 95.0 | 20.0 | 25.0 |
| Max Q Clear Time (g_c+I1), s | 10.0 | 2.0 | 10.4 | 22.0 | 24.7 | 76.5 | 7.7 | 27.0 |
| Green Ext Time (p_c), s | 0.3 | 12.9 | 0.4 | 0.0 | 0.0 | 11.6 | 0.2 | 0.0 |

**Intersection Summary**

HCM 6th Ctrl Delay 39.9
HCM 6th LOS D

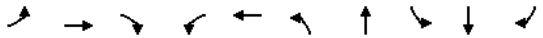

| Lane Group | EBL | EBT | EBR | WBL | WBT | NBL | NBT | SBL | SBT | SBR |
|---|---|---|---|---|---|---|---|---|---|---|
| Lane Configurations | | | | | | | | | | |
| Traffic Volume (vph) | 181 | 36 | 126 | 8 | 24 | 121 | 437 | 113 | 412 | 207 |
| Future Volume (vph) | 181 | 36 | 126 | 8 | 24 | 121 | 437 | 113 | 412 | 207 |
| Turn Type | Perm | NA | pm+ov | Perm | NA | pm+pt | NA | pm+pt | NA | Perm |
| Protected Phases | | 4 | 5 | | 8 | 5 | 2 | 1 | 6 | |
| Permitted Phases | 4 | | 4 | 8 | | 2 | | 6 | | 6 |
| Detector Phase | 4 | 4 | 5 | 8 | 8 | 5 | 2 | 1 | 6 | 6 |
| Switch Phase | | | | | | | | | | |
| Minimum Initial (s) | 5.0 | 5.0 | 5.0 | 5.0 | 5.0 | 5.0 | 5.0 | 5.0 | 5.0 | 5.0 |
| Minimum Split (s) | 23.0 | 23.0 | 10.0 | 23.0 | 23.0 | 10.0 | 23.0 | 10.0 | 23.0 | 23.0 |
| Total Split (s) | 23.0 | 23.0 | 10.0 | 23.0 | 23.0 | 10.0 | 27.0 | 10.0 | 27.0 | 27.0 |
| Total Split (%) | 38.3% | 38.3% | 16.7% | 38.3% | 38.3% | 16.7% | 45.0% | 16.7% | 45.0% | 45.0% |
| Yellow Time (s) | 4.0 | 4.0 | 4.0 | 4.0 | 4.0 | 4.0 | 4.0 | 4.0 | 4.0 | 4.0 |
| All-Red Time (s) | 1.0 | 1.0 | 1.0 | 1.0 | 1.0 | 1.0 | 1.0 | 1.0 | 1.0 | 1.0 |
| Lost Time Adjust (s) | 0.0 | 0.0 | 0.0 | 0.0 | 0.0 | 0.0 | 0.0 | 0.0 | 0.0 | 0.0 |
| Total Lost Time (s) | 5.0 | 5.0 | 5.0 | 5.0 | 5.0 | 5.0 | 5.0 | 5.0 | 5.0 | 5.0 |
| Lead/Lag | | | Lead | | | Lead | Lag | Lead | Lag | Lag |
| Lead-Lag Optimize? | | | | | | | | | | |
| Recall Mode | None | None | None | None | None | None | C-Max | None | C-Max | C-Max |

**Intersection Summary**

Cycle Length: 60
Actuated Cycle Length: 60
Offset: 0 (0%), Referenced to phase 2:NBTL and 6:SBTL, Start of Green
Natural Cycle: 75
Control Type: Actuated-Coordinated

Splits and Phases: 3: Richards Ave. & Beckner Rd.










| Movement | EBL | EBT | EBR | WBL | WBT | WBR | NBL | NBT | NBR | SBL | SBT | SBR |
|---|---|---|---|---|---|---|---|---|---|---|---|---|
| Lane Configurations | | | | | | | | | | | | |
| Traffic Volume (veh/h) | 181 | 36 | 126 | 8 | 24 | 120 | 121 | 437 | 28 | 113 | 412 | 207 |
| Future Volume (veh/h) | 181 | 36 | 126 | 8 | 24 | 120 | 121 | 437 | 28 | 113 | 412 | 207 |
| Initial Q (Qb), veh | 0 | 0 | 0 | 0 | 0 | 0 | 0 | 0 | 0 | 0 | 0 | 0 |
| Ped-Bike Adj(A_pbT) | 1.00 | | 1.00 | 1.00 | | 1.00 | 1.00 | | 1.00 | 1.00 | | 1.00 |
| Parking Bus, Adj | 1.00 | 1.00 | 1.00 | 1.00 | 1.00 | 1.00 | 1.00 | 1.00 | 1.00 | 1.00 | 1.00 | 1.00 |
| Work Zone On Approach | | No | | | No | | | No | | | No | |
| Adj Sat Flow, veh/h/ln | 1870 | 1870 | 1870 | 1870 | 1870 | 1870 | 1870 | 1870 | 1870 | 1870 | 1870 | 1870 |
| Adj Flow Rate, veh/h | 266 | 53 | 185 | 12 | 35 | 176 | 178 | 643 | 41 | 166 | 606 | 304 |
| Peak Hour Factor | 0.68 | 0.68 | 0.68 | 0.68 | 0.68 | 0.68 | 0.68 | 0.68 | 0.68 | 0.68 | 0.68 | 0.68 |
| Percent Heavy Veh, % | 2 | 2 | 2 | 2 | 2 | 2 | 2 | 2 | 2 | 2 | 2 | 2 |
| Cap, veh/h | 349 | 561 | 608 | 439 | 81 | 407 | 307 | 638 | 41 | 268 | 686 | 581 |
| Arrive On Green | 0.30 | 0.30 | 0.30 | 0.30 | 0.30 | 0.30 | 0.08 | 0.37 | 0.37 | 0.08 | 0.37 | 0.37 |
| Sat Flow, veh/h | 1171 | 1870 | 1585 | 1142 | 270 | 1356 | 1781 | 1739 | 111 | 1781 | 1870 | 1585 |
| Grp Volume(v), veh/h | 266 | 53 | 185 | 12 | 0 | 211 | 178 | 0 | 684 | 166 | 606 | 304 |
| Grp Sat Flow(s),veh/h/ln | 1171 | 1870 | 1585 | 1142 | 0 | 1626 | 1781 | 0 | 1850 | 1781 | 1870 | 1585 |
| Q Serve(g_s), s | 11.7 | 1.2 | 4.9 | 0.5 | 0.0 | 6.3 | 3.7 | 0.0 | 22.0 | 3.4 | 18.2 | 9.0 |
| Cycle Q Clear(g_c), s | 18.0 | 1.2 | 4.9 | 1.7 | 0.0 | 6.3 | 3.7 | 0.0 | 22.0 | 3.4 | 18.2 | 9.0 |
| Prop In Lane | 1.00 | | 1.00 | 1.00 | | 0.83 | 1.00 | | 0.06 | 1.00 | | 1.00 |
| Lane Grp Cap(c), veh/h | 349 | 561 | 608 | 439 | 0 | 488 | 307 | 0 | 678 | 268 | 686 | 581 |
| V/C Ratio(X) | 0.76 | 0.09 | 0.30 | 0.03 | 0.00 | 0.43 | 0.58 | 0.00 | 1.01 | 0.62 | 0.88 | 0.52 |
| Avail Cap(c_a), veh/h | 349 | 561 | 608 | 439 | 0 | 488 | 307 | 0 | 678 | 268 | 686 | 581 |
| HCM Platoon Ratio | 1.00 | 1.00 | 1.00 | 1.00 | 1.00 | 1.00 | 1.00 | 1.00 | 1.00 | 1.00 | 1.00 | 1.00 |
| Upstream Filter(I) | 1.00 | 1.00 | 1.00 | 1.00 | 0.00 | 1.00 | 1.00 | 0.00 | 1.00 | 1.00 | 1.00 | 1.00 |
| Uniform Delay (d), s/veh | 24.9 | 15.1 | 12.9 | 15.7 | 0.0 | 16.9 | 13.7 | 0.0 | 19.0 | 14.0 | 17.8 | 14.9 |
| Incr Delay (d2), s/veh | 9.5 | 0.1 | 0.3 | 0.0 | 0.0 | 0.6 | 2.7 | 0.0 | 36.6 | 4.3 | 15.4 | 3.3 |
| Initial Q Delay(d3),s/veh | 0.0 | 0.0 | 0.0 | 0.0 | 0.0 | 0.0 | 0.0 | 0.0 | 0.0 | 0.0 | 0.0 | 0.0 |
| %ile BackOfQ(95%),veh/ln | 7.7 | 0.8 | 2.6 | 0.2 | 0.0 | 3.7 | 2.6 | 0.0 | 21.3 | 2.6 | 14.7 | 6.0 |
| Unsig. Movement Delay, s/veh | | | | | | | | | | | | |
| LnGrp Delay(d),s/veh | 34.5 | 15.2 | 13.2 | 15.8 | 0.0 | 17.5 | 16.4 | 0.0 | 55.6 | 18.3 | 33.2 | 18.2 |
| LnGrp LOS | C | B | B | B | A | B | B | A | F | B | C | B |
| Approach Vol, veh/h | | 504 | | | 223 | | | 862 | | | 1076 | |
| Approach Delay, s/veh | | 24.6 | | | 17.4 | | | 47.5 | | | 26.7 | |
| Approach LOS | | C | | | B | | | D | | | C | |

| Timer - Assigned Phs | 1 | 2 | | 4 | 5 | 6 | | 8 | | | | |
|---|---|---|---|---|---|---|---|---|---|---|---|---|
| Phs Duration (G+Y+Rc), s | 10.0 | 27.0 | | 23.0 | 10.0 | 27.0 | | 23.0 | | | | |
| Change Period (Y+Rc), s | 5.0 | 5.0 | | 5.0 | 5.0 | 5.0 | | 5.0 | | | | |
| Max Green Setting (Gmax), s | 5.0 | 22.0 | | 18.0 | 5.0 | 22.0 | | 18.0 | | | | |
| Max Q Clear Time (g_c+I1), s | 5.4 | 24.0 | | 20.0 | 5.7 | 20.2 | | 8.3 | | | | |
| Green Ext Time (p_c), s | 0.0 | 0.0 | | 0.0 | 0.0 | 0.9 | | 0.8 | | | | |

| Intersection Summary | | | | | | | | | | | | |
|---|---|---|---|---|---|---|---|---|---|---|---|---|
| HCM 6th Ctrl Delay | | | 32.2 | | | | | | | | | |
| HCM 6th LOS | | | C | | | | | | | | | |

| Lane Group | EBL | EBT | EBR | WBL | WBT | NBL | NBT | SBL | SBT | SBR |
|---|---|---|---|---|---|---|---|---|---|---|
| Lane Configurations | | | | | | | | | | |
| Traffic Volume (vph) | 181 | 36 | 126 | 8 | 24 | 121 | 437 | 113 | 412 | 207 |
| Future Volume (vph) | 181 | 36 | 126 | 8 | 24 | 121 | 437 | 113 | 412 | 207 |
| Turn Type | Perm | NA | pm+ov | Perm | NA | pm+pt | NA | pm+pt | NA | Perm |
| Protected Phases | | 4 | 5 | | 8 | 5 | 2 | 1 | 6 | |
| Permitted Phases | 4 | | 4 | 8 | | 2 | | 6 | | 6 |
| Detector Phase | 4 | 4 | 5 | 8 | 8 | 5 | 2 | 1 | 6 | 6 |
| Switch Phase | | | | | | | | | | |
| Minimum Initial (s) | 5.0 | 5.0 | 5.0 | 5.0 | 5.0 | 5.0 | 5.0 | 5.0 | 5.0 | 5.0 |
| Minimum Split (s) | 23.0 | 23.0 | 10.0 | 23.0 | 23.0 | 10.0 | 23.0 | 10.0 | 23.0 | 23.0 |
| Total Split (s) | 23.0 | 23.0 | 10.0 | 23.0 | 23.0 | 10.0 | 27.0 | 10.0 | 27.0 | 27.0 |
| Total Split (%) | 38.3% | 38.3% | 16.7% | 38.3% | 38.3% | 16.7% | 45.0% | 16.7% | 45.0% | 45.0% |
| Yellow Time (s) | 4.0 | 4.0 | 4.0 | 4.0 | 4.0 | 4.0 | 4.0 | 4.0 | 4.0 | 4.0 |
| All-Red Time (s) | 1.0 | 1.0 | 1.0 | 1.0 | 1.0 | 1.0 | 1.0 | 1.0 | 1.0 | 1.0 |
| Lost Time Adjust (s) | 0.0 | 0.0 | 0.0 | 0.0 | 0.0 | 0.0 | 0.0 | 0.0 | 0.0 | 0.0 |
| Total Lost Time (s) | 5.0 | 5.0 | 5.0 | 5.0 | 5.0 | 5.0 | 5.0 | 5.0 | 5.0 | 5.0 |
| Lead/Lag | | | Lead | | | Lead | Lag | Lead | Lag | Lag |
| Lead-Lag Optimize? | | | | | | | | | | |
| Recall Mode | None | None | None | None | None | None | C-Max | None | C-Max | C-Max |

**Intersection Summary**

Cycle Length: 60
Actuated Cycle Length: 60
Offset: 0 (0%), Referenced to phase 2:NBTL and 6:SBTL, Start of Green
Natural Cycle: 75
Control Type: Actuated-Coordinated

Splits and Phases: 3: Richards Ave. & Beckner Rd.








| Movement | EBL | EBT | EBR | WBL | WBT | WBR | NBL | NBT | NBR | SBL | SBT | SBR |
|---|---|---|---|---|---|---|---|---|---|---|---|---|
| Lane Configurations | | | | | | | | | | | | |
| Traffic Volume (veh/h) | 181 | 36 | 126 | 8 | 24 | 120 | 121 | 437 | 28 | 113 | 412 | 207 |
| Future Volume (veh/h) | 181 | 36 | 126 | 8 | 24 | 120 | 121 | 437 | 28 | 113 | 412 | 207 |
| Initial Q (Qb), veh | 0 | 0 | 0 | 0 | 0 | 0 | 0 | 0 | 0 | 0 | 0 | 0 |
| Ped-Bike Adj(A_pbT) | 1.00 | | 1.00 | 1.00 | | 1.00 | 1.00 | | 1.00 | 1.00 | | 1.00 |
| Parking Bus, Adj | 1.00 | 1.00 | 1.00 | 1.00 | 1.00 | 1.00 | 1.00 | 1.00 | 1.00 | 1.00 | 1.00 | 1.00 |
| Work Zone On Approach | | No | | | No | | | No | | | No | |
| Adj Sat Flow, veh/h/ln | 1870 | 1870 | 1870 | 1870 | 1870 | 1870 | 1870 | 1870 | 1870 | 1870 | 1870 | 1870 |
| Adj Flow Rate, veh/h | 266 | 53 | 185 | 12 | 35 | 176 | 178 | 643 | 41 | 166 | 606 | 304 |
| Peak Hour Factor | 0.68 | 0.68 | 0.68 | 0.68 | 0.68 | 0.68 | 0.68 | 0.68 | 0.68 | 0.68 | 0.68 | 0.68 |
| Percent Heavy Veh, % | 2 | 2 | 2 | 2 | 2 | 2 | 2 | 2 | 2 | 2 | 2 | 2 |
| Cap, veh/h | 349 | 561 | 608 | 439 | 81 | 407 | 307 | 638 | 41 | 268 | 686 | 581 |
| Arrive On Green | 0.30 | 0.30 | 0.30 | 0.30 | 0.30 | 0.30 | 0.08 | 0.37 | 0.37 | 0.08 | 0.37 | 0.37 |
| Sat Flow, veh/h | 1171 | 1870 | 1585 | 1142 | 270 | 1356 | 1781 | 1739 | 111 | 1781 | 1870 | 1585 |
| Grp Volume(v), veh/h | 266 | 53 | 185 | 12 | 0 | 211 | 178 | 0 | 684 | 166 | 606 | 304 |
| Grp Sat Flow(s),veh/h/ln | 1171 | 1870 | 1585 | 1142 | 0 | 1626 | 1781 | 0 | 1850 | 1781 | 1870 | 1585 |
| Q Serve(g_s), s | 11.7 | 1.2 | 4.9 | 0.5 | 0.0 | 6.3 | 3.7 | 0.0 | 22.0 | 3.4 | 18.2 | 9.0 |
| Cycle Q Clear(g_c), s | 18.0 | 1.2 | 4.9 | 1.7 | 0.0 | 6.3 | 3.7 | 0.0 | 22.0 | 3.4 | 18.2 | 9.0 |
| Prop In Lane | 1.00 | | 1.00 | 1.00 | | 0.83 | 1.00 | | 0.06 | 1.00 | | 1.00 |
| Lane Grp Cap(c), veh/h | 349 | 561 | 608 | 439 | 0 | 488 | 307 | 0 | 678 | 268 | 686 | 581 |
| V/C Ratio(X) | 0.76 | 0.09 | 0.30 | 0.03 | 0.00 | 0.43 | 0.58 | 0.00 | 1.01 | 0.62 | 0.88 | 0.52 |
| Avail Cap(c_a), veh/h | 349 | 561 | 608 | 439 | 0 | 488 | 307 | 0 | 678 | 268 | 686 | 581 |
| HCM Platoon Ratio | 1.00 | 1.00 | 1.00 | 1.00 | 1.00 | 1.00 | 1.00 | 1.00 | 1.00 | 1.00 | 1.00 | 1.00 |
| Upstream Filter(I) | 1.00 | 1.00 | 1.00 | 1.00 | 0.00 | 1.00 | 1.00 | 0.00 | 1.00 | 1.00 | 1.00 | 1.00 |
| Uniform Delay (d), s/veh | 24.9 | 15.1 | 12.9 | 15.7 | 0.0 | 16.9 | 13.7 | 0.0 | 19.0 | 14.0 | 17.8 | 14.9 |
| Incr Delay (d2), s/veh | 9.5 | 0.1 | 0.3 | 0.0 | 0.0 | 0.6 | 2.7 | 0.0 | 36.6 | 4.3 | 15.4 | 3.3 |
| Initial Q Delay(d3),s/veh | 0.0 | 0.0 | 0.0 | 0.0 | 0.0 | 0.0 | 0.0 | 0.0 | 0.0 | 0.0 | 0.0 | 0.0 |
| %ile BackOfQ(95%),veh/ln | 7.7 | 0.8 | 2.6 | 0.2 | 0.0 | 3.7 | 2.6 | 0.0 | 21.3 | 2.6 | 14.7 | 6.0 |
| Unsig. Movement Delay, s/veh | | | | | | | | | | | | |
| LnGrp Delay(d),s/veh | 34.5 | 15.2 | 13.2 | 15.8 | 0.0 | 17.5 | 16.4 | 0.0 | 55.6 | 18.3 | 33.2 | 18.2 |
| LnGrp LOS | C | B | B | B | A | B | B | A | F | B | C | B |
| Approach Vol, veh/h | | 504 | | | 223 | | | 862 | | | 1076 | |
| Approach Delay, s/veh | | 24.6 | | | 17.4 | | | 47.5 | | | 26.7 | |
| Approach LOS | | C | | | B | | | D | | | C | |

| Timer - Assigned Phs | 1 | 2 | | 4 | 5 | 6 | | 8 | | | | |
|---|---|---|---|---|---|---|---|---|---|---|---|---|
| Phs Duration (G+Y+Rc), s | 10.0 | 27.0 | | 23.0 | 10.0 | 27.0 | | 23.0 | | | | |
| Change Period (Y+Rc), s | 5.0 | 5.0 | | 5.0 | 5.0 | 5.0 | | 5.0 | | | | |
| Max Green Setting (Gmax), s | 5.0 | 22.0 | | 18.0 | 5.0 | 22.0 | | 18.0 | | | | |
| Max Q Clear Time (g_c+I1), s | 5.4 | 24.0 | | 20.0 | 5.7 | 20.2 | | 8.3 | | | | |
| Green Ext Time (p_c), s | 0.0 | 0.0 | | 0.0 | 0.0 | 0.9 | | 0.8 | | | | |

**Intersection Summary**

| | | |
|---|---|---|
| HCM 6th Ctrl Delay | 32.2 | |
| HCM 6th LOS | C | |

| Lane Group | EBL | EBT | EBR | WBL | WBT | NBL | NBT | SBL | SBT | SBR |
|---|---|---|---|---|---|---|---|---|---|---|
| Lane Configurations | | | | | | | | | | |
| Traffic Volume (vph) | 217 | 38 | 141 | 8 | 27 | 138 | 437 | 113 | 412 | 243 |
| Future Volume (vph) | 217 | 38 | 141 | 8 | 27 | 138 | 437 | 113 | 412 | 243 |
| Turn Type | Perm | NA | pm+ov | Perm | NA | pm+pt | NA | pm+pt | NA | Perm |
| Protected Phases | | 4 | 5 | | 8 | 5 | 2 | 1 | 6 | |
| Permitted Phases | 4 | | 4 | 8 | | 2 | | 6 | | 6 |
| Detector Phase | 4 | 4 | 5 | 8 | 8 | 5 | 2 | 1 | 6 | 6 |
| Switch Phase | | | | | | | | | | |
| Minimum Initial (s) | 5.0 | 5.0 | 5.0 | 5.0 | 5.0 | 5.0 | 5.0 | 5.0 | 5.0 | 5.0 |
| Minimum Split (s) | 23.0 | 23.0 | 10.0 | 23.0 | 23.0 | 10.0 | 23.0 | 10.0 | 23.0 | 23.0 |
| Total Split (s) | 23.0 | 23.0 | 10.0 | 23.0 | 23.0 | 10.0 | 27.0 | 10.0 | 27.0 | 27.0 |
| Total Split (%) | 38.3% | 38.3% | 16.7% | 38.3% | 38.3% | 16.7% | 45.0% | 16.7% | 45.0% | 45.0% |
| Yellow Time (s) | 4.0 | 4.0 | 4.0 | 4.0 | 4.0 | 4.0 | 4.0 | 4.0 | 4.0 | 4.0 |
| All-Red Time (s) | 1.0 | 1.0 | 1.0 | 1.0 | 1.0 | 1.0 | 1.0 | 1.0 | 1.0 | 1.0 |
| Lost Time Adjust (s) | 0.0 | 0.0 | 0.0 | 0.0 | 0.0 | 0.0 | 0.0 | 0.0 | 0.0 | 0.0 |
| Total Lost Time (s) | 5.0 | 5.0 | 5.0 | 5.0 | 5.0 | 5.0 | 5.0 | 5.0 | 5.0 | 5.0 |
| Lead/Lag | | | Lead | | | Lead | Lag | Lead | Lag | Lag |
| Lead-Lag Optimize? | | | | | | | | | | |
| Recall Mode | None | None | None | None | None | None | C-Max | None | C-Max | C-Max |

**Intersection Summary**

Cycle Length: 60
Actuated Cycle Length: 60
Offset: 0 (0%), Referenced to phase 2:NBTL and 6:SBTL, Start of Green
Natural Cycle: 80
Control Type: Actuated-Coordinated

Splits and Phases: 3: Richards Ave. & Beckner Rd.








| Movement | EBL | EBT | EBR | WBL | WBT | WBR | NBL | NBT | NBR | SBL | SBT | SBR |
|---|---|---|---|---|---|---|---|---|---|---|---|---|
| Lane Configurations | | | | | | | | | | | | |
| Traffic Volume (veh/h) | 217 | 38 | 141 | 8 | 27 | 120 | 138 | 437 | 28 | 113 | 412 | 243 |
| Future Volume (veh/h) | 217 | 38 | 141 | 8 | 27 | 120 | 138 | 437 | 28 | 113 | 412 | 243 |
| Initial Q (Qb), veh | 0 | 0 | 0 | 0 | 0 | 0 | 0 | 0 | 0 | 0 | 0 | 0 |
| Ped-Bike Adj(A_pbT) | 1.00 | | 1.00 | 1.00 | | 1.00 | 1.00 | | 1.00 | 1.00 | | 1.00 |
| Parking Bus, Adj | 1.00 | 1.00 | 1.00 | 1.00 | 1.00 | 1.00 | 1.00 | 1.00 | 1.00 | 1.00 | 1.00 | 1.00 |
| Work Zone On Approach | | No | | | No | | | No | | | No | |
| Adj Sat Flow, veh/h/ln | 1870 | 1870 | 1870 | 1870 | 1870 | 1870 | 1870 | 1870 | 1870 | 1870 | 1870 | 1870 |
| Adj Flow Rate, veh/h | 319 | 56 | 207 | 12 | 40 | 176 | 203 | 643 | 41 | 166 | 606 | 357 |
| Peak Hour Factor | 0.68 | 0.68 | 0.68 | 0.68 | 0.68 | 0.68 | 0.68 | 0.68 | 0.68 | 0.68 | 0.68 | 0.68 |
| Percent Heavy Veh, % | 2 | 2 | 2 | 2 | 2 | 2 | 2 | 2 | 2 | 2 | 2 | 2 |
| Cap, veh/h | 345 | 561 | 608 | 431 | 91 | 399 | 305 | 638 | 41 | 268 | 686 | 581 |
| Arrive On Green | 0.30 | 0.30 | 0.30 | 0.30 | 0.30 | 0.30 | 0.08 | 0.37 | 0.37 | 0.08 | 0.37 | 0.37 |
| Sat Flow, veh/h | 1165 | 1870 | 1585 | 1116 | 302 | 1329 | 1781 | 1739 | 111 | 1781 | 1870 | 1585 |
| Grp Volume(v), veh/h | 319 | 56 | 207 | 12 | 0 | 216 | 203 | 0 | 684 | 166 | 606 | 357 |
| Grp Sat Flow(s),veh/h/ln | 1165 | 1870 | 1585 | 1116 | 0 | 1631 | 1781 | 0 | 1850 | 1781 | 1870 | 1585 |
| Q Serve(g_s), s | 11.6 | 1.3 | 5.6 | 0.5 | 0.0 | 6.4 | 4.2 | 0.0 | 22.0 | 3.4 | 18.2 | 11.0 |
| Cycle Q Clear(g_c), s | 18.0 | 1.3 | 5.6 | 1.8 | 0.0 | 6.4 | 4.2 | 0.0 | 22.0 | 3.4 | 18.2 | 11.0 |
| Prop In Lane | 1.00 | | 1.00 | 1.00 | | 0.81 | 1.00 | | 0.06 | 1.00 | | 1.00 |
| Lane Grp Cap(c), veh/h | 345 | 561 | 608 | 431 | 0 | 489 | 305 | 0 | 678 | 268 | 686 | 581 |
| V/C Ratio(X) | 0.92 | 0.10 | 0.34 | 0.03 | 0.00 | 0.44 | 0.67 | 0.00 | 1.01 | 0.62 | 0.88 | 0.61 |
| Avail Cap(c_a), veh/h | 345 | 561 | 608 | 431 | 0 | 489 | 305 | 0 | 678 | 268 | 686 | 581 |
| HCM Platoon Ratio | 1.00 | 1.00 | 1.00 | 1.00 | 1.00 | 1.00 | 1.00 | 1.00 | 1.00 | 1.00 | 1.00 | 1.00 |
| Upstream Filter(I) | 1.00 | 1.00 | 1.00 | 1.00 | 0.00 | 1.00 | 1.00 | 0.00 | 1.00 | 1.00 | 1.00 | 1.00 |
| Uniform Delay (d), s/veh | 25.9 | 15.2 | 13.1 | 15.8 | 0.0 | 16.9 | 13.9 | 0.0 | 19.0 | 14.0 | 17.8 | 15.5 |
| Incr Delay (d2), s/veh | 29.9 | 0.1 | 0.3 | 0.0 | 0.0 | 0.6 | 5.4 | 0.0 | 36.6 | 4.3 | 15.4 | 4.8 |
| Initial Q Delay(d3),s/veh | 0.0 | 0.0 | 0.0 | 0.0 | 0.0 | 0.0 | 0.0 | 0.0 | 0.0 | 0.0 | 0.0 | 0.0 |
| %ile BackOfQ(95%),veh/ln | 11.4 | 0.9 | 3.0 | 0.2 | 0.0 | 3.8 | 3.3 | 0.0 | 21.3 | 2.6 | 14.7 | 7.6 |
| Unsig. Movement Delay, s/veh | | | | | | | | | | | | |
| LnGrp Delay(d),s/veh | 55.8 | 15.2 | 13.5 | 15.8 | 0.0 | 17.6 | 19.3 | 0.0 | 55.6 | 18.3 | 33.2 | 20.3 |
| LnGrp LOS | E | B | B | B | A | B | B | A | F | B | C | C |
| Approach Vol, veh/h | | 582 | | | 228 | | | 887 | | | 1129 | |
| Approach Delay, s/veh | | 36.9 | | | 17.5 | | | 47.3 | | | 26.9 | |
| Approach LOS | | D | | | B | | | D | | | C | |

| Timer - Assigned Phs | 1 | 2 | | 4 | 5 | 6 | | 8 | | | | |
|---|---|---|---|---|---|---|---|---|---|---|---|---|
| Phs Duration (G+Y+Rc), s | 10.0 | 27.0 | | 23.0 | 10.0 | 27.0 | | 23.0 | | | | |
| Change Period (Y+Rc), s | 5.0 | 5.0 | | 5.0 | 5.0 | 5.0 | | 5.0 | | | | |
| Max Green Setting (Gmax), s | 5.0 | 22.0 | | 18.0 | 5.0 | 22.0 | | 18.0 | | | | |
| Max Q Clear Time (g_c+I1), s | 5.4 | 24.0 | | 20.0 | 6.2 | 20.2 | | 8.4 | | | | |
| Green Ext Time (p_c), s | 0.0 | 0.0 | | 0.0 | 0.0 | 1.0 | | 0.8 | | | | |

**Intersection Summary**

| | | | |
|---|---|---|---|
| HCM 6th Ctrl Delay | | 34.6 | |
| HCM 6th LOS | | C | |

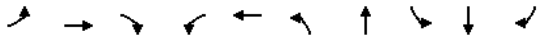

| Lane Group | EBL | EBT | EBR | WBL | WBT | NBL | NBT | SBL | SBT | SBR |
|---|---|---|---|---|---|---|---|---|---|---|
| Lane Configurations | | | | | | | | | | |
| Traffic Volume (vph) | 217 | 38 | 141 | 8 | 27 | 138 | 437 | 113 | 412 | 243 |
| Future Volume (vph) | 217 | 38 | 141 | 8 | 27 | 138 | 437 | 113 | 412 | 243 |
| Turn Type | Perm | NA | pm+ov | Perm | NA | pm+pt | NA | pm+pt | NA | Perm |
| Protected Phases | | 4 | 5 | | 8 | 5 | 2 | 1 | 6 | |
| Permitted Phases | 4 | | 4 | 8 | | 2 | | 6 | | 6 |
| Detector Phase | 4 | 4 | 5 | 8 | 8 | 5 | 2 | 1 | 6 | 6 |
| Switch Phase | | | | | | | | | | |
| Minimum Initial (s) | 5.0 | 5.0 | 5.0 | 5.0 | 5.0 | 5.0 | 5.0 | 5.0 | 5.0 | 5.0 |
| Minimum Split (s) | 23.0 | 23.0 | 10.0 | 23.0 | 23.0 | 10.0 | 23.0 | 10.0 | 23.0 | 23.0 |
| Total Split (s) | 23.0 | 23.0 | 10.0 | 23.0 | 23.0 | 10.0 | 27.0 | 10.0 | 27.0 | 27.0 |
| Total Split (%) | 38.3% | 38.3% | 16.7% | 38.3% | 38.3% | 16.7% | 45.0% | 16.7% | 45.0% | 45.0% |
| Yellow Time (s) | 4.0 | 4.0 | 4.0 | 4.0 | 4.0 | 4.0 | 4.0 | 4.0 | 4.0 | 4.0 |
| All-Red Time (s) | 1.0 | 1.0 | 1.0 | 1.0 | 1.0 | 1.0 | 1.0 | 1.0 | 1.0 | 1.0 |
| Lost Time Adjust (s) | 0.0 | 0.0 | 0.0 | 0.0 | 0.0 | 0.0 | 0.0 | 0.0 | 0.0 | 0.0 |
| Total Lost Time (s) | 5.0 | 5.0 | 5.0 | 5.0 | 5.0 | 5.0 | 5.0 | 5.0 | 5.0 | 5.0 |
| Lead/Lag | | | Lead | | | Lead | Lag | Lead | Lag | Lag |
| Lead-Lag Optimize? | | | | | | | | | | |
| Recall Mode | None | None | None | None | None | None | C-Max | None | C-Max | C-Max |

**Intersection Summary**

Cycle Length: 60
Actuated Cycle Length: 60
Offset: 0 (0%), Referenced to phase 2:NBTL and 6:SBTL, Start of Green
Natural Cycle: 80
Control Type: Actuated-Coordinated

Splits and Phases: 3: Richards Ave. & Beckner Rd.










| Movement | EBL | EBT | EBR | WBL | WBT | WBR | NBL | NBT | NBR | SBL | SBT | SBR |
|---|---|---|---|---|---|---|---|---|---|---|---|---|
| Lane Configurations | | | | | | | | | | | | |
| Traffic Volume (veh/h) | 217 | 38 | 141 | 8 | 27 | 120 | 138 | 437 | 28 | 113 | 412 | 243 |
| Future Volume (veh/h) | 217 | 38 | 141 | 8 | 27 | 120 | 138 | 437 | 28 | 113 | 412 | 243 |
| Initial Q (Qb), veh | 0 | 0 | 0 | 0 | 0 | 0 | 0 | 0 | 0 | 0 | 0 | 0 |
| Ped-Bike Adj(A_pbT) | 1.00 | | 1.00 | 1.00 | | 1.00 | 1.00 | | 1.00 | 1.00 | | 1.00 |
| Parking Bus, Adj | 1.00 | 1.00 | 1.00 | 1.00 | 1.00 | 1.00 | 1.00 | 1.00 | 1.00 | 1.00 | 1.00 | 1.00 |
| Work Zone On Approach | | No | | | No | | | No | | | No | |
| Adj Sat Flow, veh/h/ln | 1870 | 1870 | 1870 | 1870 | 1870 | 1870 | 1870 | 1870 | 1870 | 1870 | 1870 | 1870 |
| Adj Flow Rate, veh/h | 319 | 56 | 207 | 12 | 40 | 176 | 203 | 643 | 41 | 166 | 606 | 357 |
| Peak Hour Factor | 0.68 | 0.68 | 0.68 | 0.68 | 0.68 | 0.68 | 0.68 | 0.68 | 0.68 | 0.68 | 0.68 | 0.68 |
| Percent Heavy Veh, % | 2 | 2 | 2 | 2 | 2 | 2 | 2 | 2 | 2 | 2 | 2 | 2 |
| Cap, veh/h | 345 | 561 | 608 | 431 | 91 | 399 | 305 | 638 | 41 | 268 | 686 | 581 |
| Arrive On Green | 0.30 | 0.30 | 0.30 | 0.30 | 0.30 | 0.30 | 0.08 | 0.37 | 0.37 | 0.08 | 0.37 | 0.37 |
| Sat Flow, veh/h | 1165 | 1870 | 1585 | 1116 | 302 | 1329 | 1781 | 1739 | 111 | 1781 | 1870 | 1585 |
| Grp Volume(v), veh/h | 319 | 56 | 207 | 12 | 0 | 216 | 203 | 0 | 684 | 166 | 606 | 357 |
| Grp Sat Flow(s),veh/h/ln | 1165 | 1870 | 1585 | 1116 | 0 | 1631 | 1781 | 0 | 1850 | 1781 | 1870 | 1585 |
| Q Serve(g_s), s | 11.6 | 1.3 | 5.6 | 0.5 | 0.0 | 6.4 | 4.2 | 0.0 | 22.0 | 3.4 | 18.2 | 11.0 |
| Cycle Q Clear(g_c), s | 18.0 | 1.3 | 5.6 | 1.8 | 0.0 | 6.4 | 4.2 | 0.0 | 22.0 | 3.4 | 18.2 | 11.0 |
| Prop In Lane | 1.00 | | 1.00 | 1.00 | | 0.81 | 1.00 | | 0.06 | 1.00 | | 1.00 |
| Lane Grp Cap(c), veh/h | 345 | 561 | 608 | 431 | 0 | 489 | 305 | 0 | 678 | 268 | 686 | 581 |
| V/C Ratio(X) | 0.92 | 0.10 | 0.34 | 0.03 | 0.00 | 0.44 | 0.67 | 0.00 | 1.01 | 0.62 | 0.88 | 0.61 |
| Avail Cap(c_a), veh/h | 345 | 561 | 608 | 431 | 0 | 489 | 305 | 0 | 678 | 268 | 686 | 581 |
| HCM Platoon Ratio | 1.00 | 1.00 | 1.00 | 1.00 | 1.00 | 1.00 | 1.00 | 1.00 | 1.00 | 1.00 | 1.00 | 1.00 |
| Upstream Filter(I) | 1.00 | 1.00 | 1.00 | 1.00 | 0.00 | 1.00 | 1.00 | 0.00 | 1.00 | 1.00 | 1.00 | 1.00 |
| Uniform Delay (d), s/veh | 25.9 | 15.2 | 13.1 | 15.8 | 0.0 | 16.9 | 13.9 | 0.0 | 19.0 | 14.0 | 17.8 | 15.5 |
| Incr Delay (d2), s/veh | 29.9 | 0.1 | 0.3 | 0.0 | 0.0 | 0.6 | 5.4 | 0.0 | 36.6 | 4.3 | 15.4 | 4.8 |
| Initial Q Delay(d3),s/veh | 0.0 | 0.0 | 0.0 | 0.0 | 0.0 | 0.0 | 0.0 | 0.0 | 0.0 | 0.0 | 0.0 | 0.0 |
| %ile BackOfQ(95%),veh/ln | 11.4 | 0.9 | 3.0 | 0.2 | 0.0 | 3.8 | 3.3 | 0.0 | 21.3 | 2.6 | 14.7 | 7.6 |
| Unsig. Movement Delay, s/veh | | | | | | | | | | | | |
| LnGrp Delay(d),s/veh | 55.8 | 15.2 | 13.5 | 15.8 | 0.0 | 17.6 | 19.3 | 0.0 | 55.6 | 18.3 | 33.2 | 20.3 |
| LnGrp LOS | E | B | B | B | A | B | B | A | F | B | C | C |
| Approach Vol, veh/h | | 582 | | | 228 | | | 887 | | | 1129 | |
| Approach Delay, s/veh | | 36.9 | | | 17.5 | | | 47.3 | | | 26.9 | |
| Approach LOS | | D | | | B | | | D | | | C | |

| Timer - Assigned Phs | 1 | 2 | | 4 | 5 | 6 | | 8 | | | | |
|---|---|---|---|---|---|---|---|---|---|---|---|---|
| Phs Duration (G+Y+Rc), s | 10.0 | 27.0 | | 23.0 | 10.0 | 27.0 | | 23.0 | | | | |
| Change Period (Y+Rc), s | 5.0 | 5.0 | | 5.0 | 5.0 | 5.0 | | 5.0 | | | | |
| Max Green Setting (Gmax), s | 5.0 | 22.0 | | 18.0 | 5.0 | 22.0 | | 18.0 | | | | |
| Max Q Clear Time (g_c+I1), s | 5.4 | 24.0 | | 20.0 | 6.2 | 20.2 | | 8.4 | | | | |
| Green Ext Time (p_c), s | 0.0 | 0.0 | | 0.0 | 0.0 | 1.0 | | 0.8 | | | | |

| Intersection Summary | | | | | | | | | | | | |
|---|---|---|---|---|---|---|---|---|---|---|---|---|
| HCM 6th Ctrl Delay | | | 34.6 | | | | | | | | | |
| HCM 6th LOS | | | C | | | | | | | | | |

| Lane Group | EBL | EBT | EBR | WBL | WBT | NBL | NBT | SBL | SBT | SBR |
|---|---|---|---|---|---|---|---|---|---|---|
| Lane Configurations | | | | | | | | | | |
| Traffic Volume (vph) | 193 | 10 | 119 | 1 | 10 | 133 | 401 | 11 | 441 | 295 |
| Future Volume (vph) | 193 | 10 | 119 | 1 | 10 | 133 | 401 | 11 | 441 | 295 |
| Turn Type | Perm | NA | pm+ov | Perm | NA | pm+pt | NA | pm+pt | NA | Perm |
| Protected Phases | | 4 | 5 | | 8 | 5 | 2 | 1 | 6 | |
| Permitted Phases | 4 | | 4 | 8 | | 2 | | 6 | | 6 |
| Detector Phase | 4 | 4 | 5 | 8 | 8 | 5 | 2 | 1 | 6 | 6 |
| Switch Phase | | | | | | | | | | |
| Minimum Initial (s) | 5.0 | 5.0 | 5.0 | 5.0 | 5.0 | 5.0 | 5.0 | 5.0 | 5.0 | 5.0 |
| Minimum Split (s) | 23.0 | 23.0 | 10.0 | 23.0 | 23.0 | 10.0 | 23.0 | 10.0 | 23.0 | 23.0 |
| Total Split (s) | 23.0 | 23.0 | 10.0 | 23.0 | 23.0 | 10.0 | 27.0 | 10.0 | 27.0 | 27.0 |
| Total Split (%) | 38.3% | 38.3% | 16.7% | 38.3% | 38.3% | 16.7% | 45.0% | 16.7% | 45.0% | 45.0% |
| Yellow Time (s) | 4.0 | 4.0 | 4.0 | 4.0 | 4.0 | 4.0 | 4.0 | 4.0 | 4.0 | 4.0 |
| All-Red Time (s) | 1.0 | 1.0 | 1.0 | 1.0 | 1.0 | 1.0 | 1.0 | 1.0 | 1.0 | 1.0 |
| Lost Time Adjust (s) | 0.0 | 0.0 | 0.0 | 0.0 | 0.0 | 0.0 | 0.0 | 0.0 | 0.0 | 0.0 |
| Total Lost Time (s) | 5.0 | 5.0 | 5.0 | 5.0 | 5.0 | 5.0 | 5.0 | 5.0 | 5.0 | 5.0 |
| Lead/Lag | | | Lead | | | Lead | Lag | Lead | Lag | Lag |
| Lead-Lag Optimize? | | | | | | | | | | |
| Recall Mode | None | None | None | None | None | None | C-Max | None | C-Max | C-Max |

**Intersection Summary**

Cycle Length: 60
Actuated Cycle Length: 60
Offset: 0 (0%), Referenced to phase 2:NBTL and 6:SBTL, Start of Green
Natural Cycle: 60
Control Type: Actuated-Coordinated
Description: Beckner Rd.

Splits and Phases: 3: Richards Ave. & Beckner Rd.

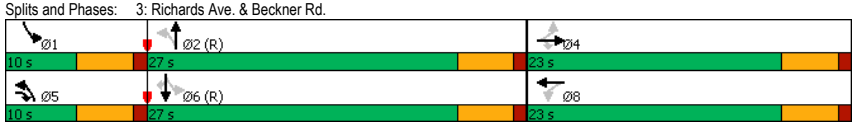






| Movement | EBL | EBT | EBR | WBL | WBT | WBR | NBL | NBT | NBR | SBL | SBT | SBR |
|---|---|---|---|---|---|---|---|---|---|---|---|---|
| Lane Configurations | | | | | | | | | | | | |
| Traffic Volume (veh/h) | 193 | 10 | 119 | 1 | 10 | 5 | 133 | 401 | 1 | 11 | 441 | 295 |
| Future Volume (veh/h) | 193 | 10 | 119 | 1 | 10 | 5 | 133 | 401 | 1 | 11 | 441 | 295 |
| Initial Q (Qb), veh | 0 | 0 | 0 | 0 | 0 | 0 | 0 | 0 | 0 | 0 | 0 | 0 |
| Ped-Bike Adj(A_pbT) | 1.00 | | 1.00 | 1.00 | | 1.00 | 1.00 | | 1.00 | 1.00 | | 1.00 |
| Parking Bus, Adj | 1.00 | 1.00 | 1.00 | 1.00 | 1.00 | 1.00 | 1.00 | 1.00 | 1.00 | 1.00 | 1.00 | 1.00 |
| Work Zone On Approach | | No | | | No | | | No | | | No | |
| Adj Sat Flow, veh/h/ln | 1870 | 1870 | 1870 | 1870 | 1870 | 1870 | 1870 | 1870 | 1870 | 1870 | 1870 | 1870 |
| Adj Flow Rate, veh/h | 201 | 10 | 124 | 1 | 10 | 5 | 139 | 418 | 1 | 11 | 459 | 307 |
| Peak Hour Factor | 0.96 | 0.96 | 0.96 | 0.96 | 0.96 | 0.96 | 0.96 | 0.96 | 0.96 | 0.96 | 0.96 | 0.96 |
| Percent Heavy Veh, % | 2 | 2 | 2 | 2 | 2 | 2 | 2 | 2 | 2 | 2 | 2 | 2 |
| Cap, veh/h | 372 | 351 | 416 | 350 | 220 | 110 | 479 | 1023 | 2 | 550 | 912 | 773 |
| Arrive On Green | 0.19 | 0.19 | 0.19 | 0.19 | 0.19 | 0.19 | 0.08 | 0.55 | 0.55 | 0.01 | 0.49 | 0.49 |
| Sat Flow, veh/h | 1398 | 1870 | 1585 | 1256 | 1176 | 588 | 1781 | 1865 | 4 | 1781 | 1870 | 1585 |
| Grp Volume(v), veh/h | 201 | 10 | 124 | 1 | 0 | 15 | 139 | 0 | 419 | 11 | 459 | 307 |
| Grp Sat Flow(s),veh/h/ln | 1398 | 1870 | 1585 | 1256 | 0 | 1764 | 1781 | 0 | 1870 | 1781 | 1870 | 1585 |
| Q Serve(g_s), s | 8.3 | 0.3 | 3.8 | 0.0 | 0.0 | 0.4 | 2.2 | 0.0 | 7.8 | 0.2 | 10.0 | 7.4 |
| Cycle Q Clear(g_c), s | 8.7 | 0.3 | 3.8 | 0.3 | 0.0 | 0.4 | 2.2 | 0.0 | 7.8 | 0.2 | 10.0 | 7.4 |
| Prop In Lane | 1.00 | | 1.00 | 1.00 | | 0.33 | 1.00 | | 0.00 | 1.00 | | 1.00 |
| Lane Grp Cap(c), veh/h | 372 | 351 | 416 | 350 | 0 | 331 | 479 | 0 | 1026 | 550 | 912 | 773 |
| V/C Ratio(X) | 0.54 | 0.03 | 0.30 | 0.00 | 0.00 | 0.05 | 0.29 | 0.00 | 0.41 | 0.02 | 0.50 | 0.40 |
| Avail Cap(c_a), veh/h | 530 | 561 | 595 | 491 | 0 | 529 | 494 | 0 | 1026 | 673 | 912 | 773 |
| HCM Platoon Ratio | 1.00 | 1.00 | 1.00 | 1.00 | 1.00 | 1.00 | 1.00 | 1.00 | 1.00 | 1.00 | 1.00 | 1.00 |
| Upstream Filter(I) | 1.00 | 1.00 | 1.00 | 1.00 | 0.00 | 1.00 | 1.00 | 0.00 | 1.00 | 1.00 | 1.00 | 1.00 |
| Uniform Delay (d), s/veh | 23.5 | 19.9 | 17.7 | 20.0 | 0.0 | 20.0 | 7.1 | 0.0 | 7.9 | 7.6 | 10.4 | 9.8 |
| Incr Delay (d2), s/veh | 1.2 | 0.0 | 0.4 | 0.0 | 0.0 | 0.1 | 0.3 | 0.0 | 1.2 | 0.0 | 2.0 | 1.5 |
| Initial Q Delay(d3),s/veh | 0.0 | 0.0 | 0.0 | 0.0 | 0.0 | 0.0 | 0.0 | 0.0 | 0.0 | 0.0 | 0.0 | 0.0 |
| %ile BackOfQ(50%),veh/ln | 2.5 | 0.1 | 1.2 | 0.0 | 0.0 | 0.2 | 0.6 | 0.0 | 2.7 | 0.1 | 3.8 | 2.4 |
| Unsig. Movement Delay, s/veh | | | | | | | | | | | | |
| LnGrp Delay(d),s/veh | 24.8 | 19.9 | 18.1 | 20.0 | 0.0 | 20.0 | 7.4 | 0.0 | 9.1 | 7.7 | 12.4 | 11.3 |
| LnGrp LOS | C | B | B | C | A | C | A | A | A | A | B | B |
| Approach Vol, veh/h | | 335 | | | 16 | | | 558 | | | 777 | |
| Approach Delay, s/veh | | 22.1 | | | 20.0 | | | 8.7 | | | 11.9 | |
| Approach LOS | | C | | | C | | | A | | | B | |

| Timer - Assigned Phs | 1 | 2 | | 4 | 5 | 6 | | 8 | | | | |
|---|---|---|---|---|---|---|---|---|---|---|---|---|
| Phs Duration (G+Y+Rc), s | 5.8 | 37.9 | | 16.2 | 9.5 | 34.2 | | 16.2 | | | | |
| Change Period (Y+Rc), s | 5.0 | 5.0 | | 5.0 | 5.0 | 5.0 | | 5.0 | | | | |
| Max Green Setting (Gmax), s | 5.0 | 22.0 | | 18.0 | 5.0 | 22.0 | | 18.0 | | | | |
| Max Q Clear Time (g_c+I1), s | 2.2 | 9.8 | | 10.7 | 4.2 | 12.0 | | 2.4 | | | | |
| Green Ext Time (p_c), s | 0.0 | 2.0 | | 0.6 | 0.0 | 2.9 | | 0.0 | | | | |

**Intersection Summary**

| | | | |
|---|---|---|---|
| HCM 6th Ctrl Delay | | 13.0 | |
| HCM 6th LOS | | B | |

| Lane Group | EBL | EBT | EBR | WBL | WBT | NBL | NBT | SBL | SBT | SBR |
|---|---|---|---|---|---|---|---|---|---|---|
| Lane Configurations | | | | | | | | | | |
| Traffic Volume (vph) | 193 | 10 | 119 | 1 | 10 | 133 | 401 | 11 | 441 | 295 |
| Future Volume (vph) | 193 | 10 | 119 | 1 | 10 | 133 | 401 | 11 | 441 | 295 |
| Turn Type | Perm | NA | pm+ov | Perm | NA | pm+pt | NA | pm+pt | NA | Perm |
| Protected Phases | | 4 | 5 | | 8 | 5 | 2 | 1 | 6 | |
| Permitted Phases | 4 | | 4 | 8 | | 2 | | 6 | | 6 |
| Detector Phase | 4 | 4 | 5 | 8 | 8 | 5 | 2 | 1 | 6 | 6 |
| Switch Phase | | | | | | | | | | |
| Minimum Initial (s) | 5.0 | 5.0 | 5.0 | 5.0 | 5.0 | 5.0 | 5.0 | 5.0 | 5.0 | 5.0 |
| Minimum Split (s) | 23.0 | 23.0 | 10.0 | 23.0 | 23.0 | 10.0 | 23.0 | 10.0 | 23.0 | 23.0 |
| Total Split (s) | 23.0 | 23.0 | 10.0 | 23.0 | 23.0 | 10.0 | 27.0 | 10.0 | 27.0 | 27.0 |
| Total Split (%) | 38.3% | 38.3% | 16.7% | 38.3% | 38.3% | 16.7% | 45.0% | 16.7% | 45.0% | 45.0% |
| Yellow Time (s) | 4.0 | 4.0 | 4.0 | 4.0 | 4.0 | 4.0 | 4.0 | 4.0 | 4.0 | 4.0 |
| All-Red Time (s) | 1.0 | 1.0 | 1.0 | 1.0 | 1.0 | 1.0 | 1.0 | 1.0 | 1.0 | 1.0 |
| Lost Time Adjust (s) | 0.0 | 0.0 | 0.0 | 0.0 | 0.0 | 0.0 | 0.0 | 0.0 | 0.0 | 0.0 |
| Total Lost Time (s) | 5.0 | 5.0 | 5.0 | 5.0 | 5.0 | 5.0 | 5.0 | 5.0 | 5.0 | 5.0 |
| Lead/Lag | | | Lead | | | Lead | Lag | Lead | Lag | Lag |
| Lead-Lag Optimize? | | | | | | | | | | |
| Recall Mode | None | None | None | None | None | None | C-Max | None | C-Max | C-Max |

**Intersection Summary**

Cycle Length: 60
Actuated Cycle Length: 60
Offset: 0 (0%), Referenced to phase 2:NBTL and 6:SBTL, Start of Green
Natural Cycle: 60
Control Type: Actuated-Coordinated
Description: Beckner Rd.

Splits and Phases: 3: Richards Ave. & Beckner Rd.

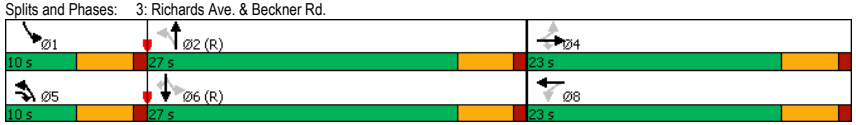






| Movement | EBL | EBT | EBR | WBL | WBT | WBR | NBL | NBT | NBR | SBL | SBT | SBR |
|---|---|---|---|---|---|---|---|---|---|---|---|---|
| Lane Configurations | | | | | | | | | | | | |
| Traffic Volume (veh/h) | 193 | 10 | 119 | 1 | 10 | 5 | 133 | 401 | 1 | 11 | 441 | 295 |
| Future Volume (veh/h) | 193 | 10 | 119 | 1 | 10 | 5 | 133 | 401 | 1 | 11 | 441 | 295 |
| Initial Q (Qb), veh | 0 | 0 | 0 | 0 | 0 | 0 | 0 | 0 | 0 | 0 | 0 | 0 |
| Ped-Bike Adj(A_pbT) | 1.00 | | 1.00 | 1.00 | | 1.00 | 1.00 | | 1.00 | 1.00 | | 1.00 |
| Parking Bus, Adj | 1.00 | 1.00 | 1.00 | 1.00 | 1.00 | 1.00 | 1.00 | 1.00 | 1.00 | 1.00 | 1.00 | 1.00 |
| Work Zone On Approach | | No | | | No | | | No | | | No | |
| Adj Sat Flow, veh/h/ln | 1870 | 1870 | 1870 | 1870 | 1870 | 1870 | 1870 | 1870 | 1870 | 1870 | 1870 | 1870 |
| Adj Flow Rate, veh/h | 201 | 10 | 124 | 1 | 10 | 5 | 139 | 418 | 1 | 11 | 459 | 307 |
| Peak Hour Factor | 0.96 | 0.96 | 0.96 | 0.96 | 0.96 | 0.96 | 0.96 | 0.96 | 0.96 | 0.96 | 0.96 | 0.96 |
| Percent Heavy Veh, % | 2 | 2 | 2 | 2 | 2 | 2 | 2 | 2 | 2 | 2 | 2 | 2 |
| Cap, veh/h | 372 | 351 | 416 | 350 | 220 | 110 | 479 | 1023 | 2 | 550 | 912 | 773 |
| Arrive On Green | 0.19 | 0.19 | 0.19 | 0.19 | 0.19 | 0.19 | 0.08 | 0.55 | 0.55 | 0.01 | 0.49 | 0.49 |
| Sat Flow, veh/h | 1398 | 1870 | 1585 | 1256 | 1176 | 588 | 1781 | 1865 | 4 | 1781 | 1870 | 1585 |
| Grp Volume(v), veh/h | 201 | 10 | 124 | 1 | 0 | 15 | 139 | 0 | 419 | 11 | 459 | 307 |
| Grp Sat Flow(s),veh/h/ln | 1398 | 1870 | 1585 | 1256 | 0 | 1764 | 1781 | 0 | 1870 | 1781 | 1870 | 1585 |
| Q Serve(g_s), s | 8.3 | 0.3 | 3.8 | 0.0 | 0.0 | 0.4 | 2.2 | 0.0 | 7.8 | 0.2 | 10.0 | 7.4 |
| Cycle Q Clear(g_c), s | 8.7 | 0.3 | 3.8 | 0.3 | 0.0 | 0.4 | 2.2 | 0.0 | 7.8 | 0.2 | 10.0 | 7.4 |
| Prop In Lane | 1.00 | | 1.00 | 1.00 | | 0.33 | 1.00 | | 0.00 | 1.00 | | 1.00 |
| Lane Grp Cap(c), veh/h | 372 | 351 | 416 | 350 | 0 | 331 | 479 | 0 | 1026 | 550 | 912 | 773 |
| V/C Ratio(X) | 0.54 | 0.03 | 0.30 | 0.00 | 0.00 | 0.05 | 0.29 | 0.00 | 0.41 | 0.02 | 0.50 | 0.40 |
| Avail Cap(c_a), veh/h | 530 | 561 | 595 | 491 | 0 | 529 | 494 | 0 | 1026 | 673 | 912 | 773 |
| HCM Platoon Ratio | 1.00 | 1.00 | 1.00 | 1.00 | 1.00 | 1.00 | 1.00 | 1.00 | 1.00 | 1.00 | 1.00 | 1.00 |
| Upstream Filter(I) | 1.00 | 1.00 | 1.00 | 1.00 | 0.00 | 1.00 | 1.00 | 0.00 | 1.00 | 1.00 | 1.00 | 1.00 |
| Uniform Delay (d), s/veh | 23.5 | 19.9 | 17.7 | 20.0 | 0.0 | 20.0 | 7.1 | 0.0 | 7.9 | 7.6 | 10.4 | 9.8 |
| Incr Delay (d2), s/veh | 1.2 | 0.0 | 0.4 | 0.0 | 0.0 | 0.1 | 0.3 | 0.0 | 1.2 | 0.0 | 2.0 | 1.5 |
| Initial Q Delay(d3),s/veh | 0.0 | 0.0 | 0.0 | 0.0 | 0.0 | 0.0 | 0.0 | 0.0 | 0.0 | 0.0 | 0.0 | 0.0 |
| %ile BackOfQ(50%),veh/ln | 2.5 | 0.1 | 1.2 | 0.0 | 0.0 | 0.2 | 0.6 | 0.0 | 2.7 | 0.1 | 3.8 | 2.4 |
| Unsig. Movement Delay, s/veh | | | | | | | | | | | | |
| LnGrp Delay(d),s/veh | 24.8 | 19.9 | 18.1 | 20.0 | 0.0 | 20.0 | 7.4 | 0.0 | 9.1 | 7.7 | 12.4 | 11.3 |
| LnGrp LOS | C | B | B | C | A | C | A | A | A | A | B | B |
| Approach Vol, veh/h | | 335 | | | 16 | | | 558 | | | 777 | |
| Approach Delay, s/veh | | 22.1 | | | 20.0 | | | 8.7 | | | 11.9 | |
| Approach LOS | | C | | | C | | | A | | | B | |

| Timer - Assigned Phs | 1 | 2 | | 4 | 5 | 6 | | 8 | | | | |
|---|---|---|---|---|---|---|---|---|---|---|---|---|
| Phs Duration (G+Y+Rc), s | 5.8 | 37.9 | | 16.2 | 9.5 | 34.2 | | 16.2 | | | | |
| Change Period (Y+Rc), s | 5.0 | 5.0 | | 5.0 | 5.0 | 5.0 | | 5.0 | | | | |
| Max Green Setting (Gmax), s | 5.0 | 22.0 | | 18.0 | 5.0 | 22.0 | | 18.0 | | | | |
| Max Q Clear Time (g_c+I1), s | 2.2 | 9.8 | | 10.7 | 4.2 | 12.0 | | 2.4 | | | | |
| Green Ext Time (p_c), s | 0.0 | 2.0 | | 0.6 | 0.0 | 2.9 | | 0.0 | | | | |

**Intersection Summary**

| | | |
|---|---|---|
| HCM 6th Ctrl Delay | 13.0 | |
| HCM 6th LOS | B | |

| Lane Group | EBL | EBT | EBR | WBL | WBT | NBL | NBT | SBL | SBT | SBR |
|---|---|---|---|---|---|---|---|---|---|---|
| Lane Configurations | | | | | | | | | | |
| Traffic Volume (vph) | 240 | 13 | 136 | 1 | 13 | 148 | 401 | 11 | 441 | 341 |
| Future Volume (vph) | 240 | 13 | 136 | 1 | 13 | 148 | 401 | 11 | 441 | 341 |
| Turn Type | Perm | NA | pm+ov | Perm | NA | pm+pt | NA | pm+pt | NA | Perm |
| Protected Phases | | 4 | 5 | | 8 | 5 | 2 | 1 | 6 | |
| Permitted Phases | 4 | | 4 | 8 | | 2 | | 6 | | 6 |
| Detector Phase | 4 | 4 | 5 | 8 | 8 | 5 | 2 | 1 | 6 | 6 |
| Switch Phase | | | | | | | | | | |
| Minimum Initial (s) | 5.0 | 5.0 | 5.0 | 5.0 | 5.0 | 5.0 | 5.0 | 5.0 | 5.0 | 5.0 |
| Minimum Split (s) | 23.0 | 23.0 | 10.0 | 23.0 | 23.0 | 10.0 | 23.0 | 10.0 | 23.0 | 23.0 |
| Total Split (s) | 23.0 | 23.0 | 10.0 | 23.0 | 23.0 | 10.0 | 27.0 | 10.0 | 27.0 | 27.0 |
| Total Split (%) | 38.3% | 38.3% | 16.7% | 38.3% | 38.3% | 16.7% | 45.0% | 16.7% | 45.0% | 45.0% |
| Yellow Time (s) | 4.0 | 4.0 | 4.0 | 4.0 | 4.0 | 4.0 | 4.0 | 4.0 | 4.0 | 4.0 |
| All-Red Time (s) | 1.0 | 1.0 | 1.0 | 1.0 | 1.0 | 1.0 | 1.0 | 1.0 | 1.0 | 1.0 |
| Lost Time Adjust (s) | 0.0 | 0.0 | 0.0 | 0.0 | 0.0 | 0.0 | 0.0 | 0.0 | 0.0 | 0.0 |
| Total Lost Time (s) | 5.0 | 5.0 | 5.0 | 5.0 | 5.0 | 5.0 | 5.0 | 5.0 | 5.0 | 5.0 |
| Lead/Lag | | | Lead | | | Lead | Lag | Lead | Lag | Lag |
| Lead-Lag Optimize? | | | | | | | | | | |
| Recall Mode | None | None | None | None | None | None | C-Max | None | C-Max | C-Max |

**Intersection Summary**

Cycle Length: 60
Actuated Cycle Length: 60
Offset: 0 (0%), Referenced to phase 2:NBTL and 6:SBTL, Start of Green
Natural Cycle: 60
Control Type: Actuated-Coordinated
Description: Beckner Rd.

Splits and Phases: 3: Richards Ave. & Beckner Rd.

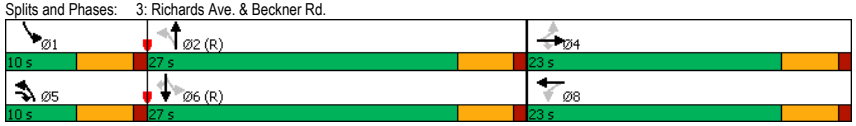






| Movement | EBL | EBT | EBR | WBL | WBT | WBR | NBL | NBT | NBR | SBL | SBT | SBR |
|---|---|---|---|---|---|---|---|---|---|---|---|---|
| Lane Configurations | | | | | | | | | | | | |
| Traffic Volume (veh/h) | 240 | 13 | 136 | 1 | 13 | 5 | 148 | 401 | 1 | 11 | 441 | 341 |
| Future Volume (veh/h) | 240 | 13 | 136 | 1 | 13 | 5 | 148 | 401 | 1 | 11 | 441 | 341 |
| Initial Q (Qb), veh | 0 | 0 | 0 | 0 | 0 | 0 | 0 | 0 | 0 | 0 | 0 | 0 |
| Ped-Bike Adj(A_pbT) | 1.00 | | 1.00 | 1.00 | | 1.00 | 1.00 | | 1.00 | 1.00 | | 1.00 |
| Parking Bus, Adj | 1.00 | 1.00 | 1.00 | 1.00 | 1.00 | 1.00 | 1.00 | 1.00 | 1.00 | 1.00 | 1.00 | 1.00 |
| Work Zone On Approach | | No | | | No | | | No | | | No | |
| Adj Sat Flow, veh/h/ln | 1870 | 1870 | 1870 | 1870 | 1870 | 1870 | 1870 | 1870 | 1870 | 1870 | 1870 | 1870 |
| Adj Flow Rate, veh/h | 250 | 14 | 142 | 1 | 14 | 5 | 154 | 418 | 1 | 11 | 459 | 355 |
| Peak Hour Factor | 0.96 | 0.96 | 0.96 | 0.96 | 0.96 | 0.96 | 0.96 | 0.96 | 0.96 | 0.96 | 0.96 | 0.96 |
| Percent Heavy Veh, % | 2 | 2 | 2 | 2 | 2 | 2 | 2 | 2 | 2 | 2 | 2 | 2 |
| Cap, veh/h | 420 | 418 | 476 | 388 | 294 | 105 | 439 | 956 | 2 | 505 | 841 | 713 |
| Arrive On Green | 0.22 | 0.22 | 0.22 | 0.22 | 0.22 | 0.22 | 0.08 | 0.51 | 0.51 | 0.01 | 0.45 | 0.45 |
| Sat Flow, veh/h | 1393 | 1870 | 1585 | 1231 | 1316 | 470 | 1781 | 1865 | 4 | 1781 | 1870 | 1585 |
| Grp Volume(v), veh/h | 250 | 14 | 142 | 1 | 0 | 19 | 154 | 0 | 419 | 11 | 459 | 355 |
| Grp Sat Flow(s),veh/h/ln | 1393 | 1870 | 1585 | 1231 | 0 | 1786 | 1781 | 0 | 1870 | 1781 | 1870 | 1585 |
| Q Serve(g_s), s | 10.3 | 0.4 | 4.1 | 0.0 | 0.0 | 0.5 | 2.6 | 0.0 | 8.4 | 0.2 | 10.7 | 9.5 |
| Cycle Q Clear(g_c), s | 10.8 | 0.4 | 4.1 | 0.4 | 0.0 | 0.5 | 2.6 | 0.0 | 8.4 | 0.2 | 10.7 | 9.5 |
| Prop In Lane | 1.00 | | 1.00 | 1.00 | | 0.26 | 1.00 | | 0.00 | 1.00 | | 1.00 |
| Lane Grp Cap(c), veh/h | 420 | 418 | 476 | 388 | 0 | 399 | 439 | 0 | 958 | 505 | 841 | 713 |
| V/C Ratio(X) | 0.60 | 0.03 | 0.30 | 0.00 | 0.00 | 0.05 | 0.35 | 0.00 | 0.44 | 0.02 | 0.55 | 0.50 |
| Avail Cap(c_a), veh/h | 526 | 561 | 597 | 482 | 0 | 536 | 450 | 0 | 958 | 628 | 841 | 713 |
| HCM Platoon Ratio | 1.00 | 1.00 | 1.00 | 1.00 | 1.00 | 1.00 | 1.00 | 1.00 | 1.00 | 1.00 | 1.00 | 1.00 |
| Upstream Filter(I) | 1.00 | 1.00 | 1.00 | 1.00 | 0.00 | 1.00 | 1.00 | 0.00 | 1.00 | 1.00 | 1.00 | 1.00 |
| Uniform Delay (d), s/veh | 22.5 | 18.2 | 16.1 | 18.4 | 0.0 | 18.3 | 8.4 | 0.0 | 9.2 | 8.9 | 12.0 | 11.7 |
| Incr Delay (d2), s/veh | 1.4 | 0.0 | 0.3 | 0.0 | 0.0 | 0.0 | 0.5 | 0.0 | 1.5 | 0.0 | 2.5 | 2.5 |
| Initial Q Delay(d3),s/veh | 0.0 | 0.0 | 0.0 | 0.0 | 0.0 | 0.0 | 0.0 | 0.0 | 0.0 | 0.0 | 0.0 | 0.0 |
| %ile BackOfQ(95%),veh/ln | 5.5 | 0.2 | 2.3 | 0.0 | 0.0 | 0.3 | 1.5 | 0.0 | 5.6 | 0.1 | 7.7 | 5.9 |
| Unsig. Movement Delay, s/veh | | | | | | | | | | | | |
| LnGrp Delay(d),s/veh | 23.9 | 18.3 | 16.5 | 18.4 | 0.0 | 18.3 | 8.9 | 0.0 | 10.6 | 8.9 | 14.6 | 14.2 |
| LnGrp LOS | C | B | B | B | A | B | A | A | B | A | B | B |
| Approach Vol, veh/h | | 406 | | | 20 | | | 573 | | | 825 | |
| Approach Delay, s/veh | | 21.1 | | | 18.3 | | | 10.2 | | | 14.3 | |
| Approach LOS | | C | | | B | | | B | | | B | |

| Timer - Assigned Phs | 1 | 2 | | 4 | 5 | 6 | | 8 | | | | |
|---|---|---|---|---|---|---|---|---|---|---|---|---|
| Phs Duration (G+Y+Rc), s | 5.8 | 35.8 | | 18.4 | 9.6 | 32.0 | | 18.4 | | | | |
| Change Period (Y+Rc), s | 5.0 | 5.0 | | 5.0 | 5.0 | 5.0 | | 5.0 | | | | |
| Max Green Setting (Gmax), s | 5.0 | 22.0 | | 18.0 | 5.0 | 22.0 | | 18.0 | | | | |
| Max Q Clear Time (g_c+I1), s | 2.2 | 10.4 | | 12.8 | 4.6 | 12.7 | | 2.5 | | | | |
| Green Ext Time (p_c), s | 0.0 | 1.9 | | 0.6 | 0.0 | 2.9 | | 0.0 | | | | |

**Intersection Summary**

| | | | |
|---|---|---|---|
| HCM 6th Ctrl Delay | | 14.6 | |
| HCM 6th LOS | | B | |

| Lane Group | EBL | EBT | EBR | WBL | WBT | NBL | NBT | SBL | SBT | SBR |
|---|---|---|---|---|---|---|---|---|---|---|
| Lane Configurations | | | | | | | | | | |
| Traffic Volume (vph) | 240 | 13 | 136 | 1 | 13 | 148 | 401 | 11 | 441 | 341 |
| Future Volume (vph) | 240 | 13 | 136 | 1 | 13 | 148 | 401 | 11 | 441 | 341 |
| Turn Type | Perm | NA | pm+ov | Perm | NA | pm+pt | NA | pm+pt | NA | Perm |
| Protected Phases | | 4 | 5 | | 8 | 5 | 2 | 1 | 6 | |
| Permitted Phases | 4 | | 4 | 8 | | 2 | | 6 | | 6 |
| Detector Phase | 4 | 4 | 5 | 8 | 8 | 5 | 2 | 1 | 6 | 6 |
| Switch Phase | | | | | | | | | | |
| Minimum Initial (s) | 5.0 | 5.0 | 5.0 | 5.0 | 5.0 | 5.0 | 5.0 | 5.0 | 5.0 | 5.0 |
| Minimum Split (s) | 23.0 | 23.0 | 10.0 | 23.0 | 23.0 | 10.0 | 23.0 | 10.0 | 23.0 | 23.0 |
| Total Split (s) | 23.0 | 23.0 | 10.0 | 23.0 | 23.0 | 10.0 | 27.0 | 10.0 | 27.0 | 27.0 |
| Total Split (%) | 38.3% | 38.3% | 16.7% | 38.3% | 38.3% | 16.7% | 45.0% | 16.7% | 45.0% | 45.0% |
| Yellow Time (s) | 4.0 | 4.0 | 4.0 | 4.0 | 4.0 | 4.0 | 4.0 | 4.0 | 4.0 | 4.0 |
| All-Red Time (s) | 1.0 | 1.0 | 1.0 | 1.0 | 1.0 | 1.0 | 1.0 | 1.0 | 1.0 | 1.0 |
| Lost Time Adjust (s) | 0.0 | 0.0 | 0.0 | 0.0 | 0.0 | 0.0 | 0.0 | 0.0 | 0.0 | 0.0 |
| Total Lost Time (s) | 5.0 | 5.0 | 5.0 | 5.0 | 5.0 | 5.0 | 5.0 | 5.0 | 5.0 | 5.0 |
| Lead/Lag | | | Lead | | | Lead | Lag | Lead | Lag | Lag |
| Lead-Lag Optimize? | | | | | | | | | | |
| Recall Mode | None | None | None | None | None | None | C-Max | None | C-Max | C-Max |

**Intersection Summary**

Cycle Length: 60
Actuated Cycle Length: 60
Offset: 0 (0%), Referenced to phase 2:NBTL and 6:SBTL, Start of Green
Natural Cycle: 60
Control Type: Actuated-Coordinated
Description: Beckner Rd.

Splits and Phases: 3: Richards Ave. & Beckner Rd.

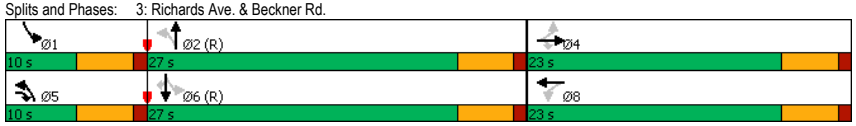






| Movement | EBL | EBT | EBR | WBL | WBT | WBR | NBL | NBT | NBR | SBL | SBT | SBR |
|---|---|---|---|---|---|---|---|---|---|---|---|---|
| Lane Configurations | | | | | | | | | | | | |
| Traffic Volume (veh/h) | 240 | 13 | 136 | 1 | 13 | 5 | 148 | 401 | 1 | 11 | 441 | 341 |
| Future Volume (veh/h) | 240 | 13 | 136 | 1 | 13 | 5 | 148 | 401 | 1 | 11 | 441 | 341 |
| Initial Q (Qb), veh | 0 | 0 | 0 | 0 | 0 | 0 | 0 | 0 | 0 | 0 | 0 | 0 |
| Ped-Bike Adj(A_pbT) | 1.00 | | 1.00 | 1.00 | | 1.00 | 1.00 | | 1.00 | 1.00 | | 1.00 |
| Parking Bus, Adj | 1.00 | 1.00 | 1.00 | 1.00 | 1.00 | 1.00 | 1.00 | 1.00 | 1.00 | 1.00 | 1.00 | 1.00 |
| Work Zone On Approach | | No | | | No | | | No | | | No | |
| Adj Sat Flow, veh/h/ln | 1870 | 1870 | 1870 | 1870 | 1870 | 1870 | 1870 | 1870 | 1870 | 1870 | 1870 | 1870 |
| Adj Flow Rate, veh/h | 250 | 14 | 142 | 1 | 14 | 5 | 154 | 418 | 1 | 11 | 459 | 355 |
| Peak Hour Factor | 0.96 | 0.96 | 0.96 | 0.96 | 0.96 | 0.96 | 0.96 | 0.96 | 0.96 | 0.96 | 0.96 | 0.96 |
| Percent Heavy Veh, % | 2 | 2 | 2 | 2 | 2 | 2 | 2 | 2 | 2 | 2 | 2 | 2 |
| Cap, veh/h | 420 | 418 | 476 | 388 | 294 | 105 | 439 | 956 | 2 | 505 | 841 | 713 |
| Arrive On Green | 0.22 | 0.22 | 0.22 | 0.22 | 0.22 | 0.22 | 0.08 | 0.51 | 0.51 | 0.01 | 0.45 | 0.45 |
| Sat Flow, veh/h | 1393 | 1870 | 1585 | 1231 | 1316 | 470 | 1781 | 1865 | 4 | 1781 | 1870 | 1585 |
| Grp Volume(v), veh/h | 250 | 14 | 142 | 1 | 0 | 19 | 154 | 0 | 419 | 11 | 459 | 355 |
| Grp Sat Flow(s),veh/h/ln | 1393 | 1870 | 1585 | 1231 | 0 | 1786 | 1781 | 0 | 1870 | 1781 | 1870 | 1585 |
| Q Serve(g_s), s | 10.3 | 0.4 | 4.1 | 0.0 | 0.0 | 0.5 | 2.6 | 0.0 | 8.4 | 0.2 | 10.7 | 9.5 |
| Cycle Q Clear(g_c), s | 10.8 | 0.4 | 4.1 | 0.4 | 0.0 | 0.5 | 2.6 | 0.0 | 8.4 | 0.2 | 10.7 | 9.5 |
| Prop In Lane | 1.00 | | 1.00 | 1.00 | | 0.26 | 1.00 | | 0.00 | 1.00 | | 1.00 |
| Lane Grp Cap(c), veh/h | 420 | 418 | 476 | 388 | 0 | 399 | 439 | 0 | 958 | 505 | 841 | 713 |
| V/C Ratio(X) | 0.60 | 0.03 | 0.30 | 0.00 | 0.00 | 0.05 | 0.35 | 0.00 | 0.44 | 0.02 | 0.55 | 0.50 |
| Avail Cap(c_a), veh/h | 526 | 561 | 597 | 482 | 0 | 536 | 450 | 0 | 958 | 628 | 841 | 713 |
| HCM Platoon Ratio | 1.00 | 1.00 | 1.00 | 1.00 | 1.00 | 1.00 | 1.00 | 1.00 | 1.00 | 1.00 | 1.00 | 1.00 |
| Upstream Filter(I) | 1.00 | 1.00 | 1.00 | 1.00 | 0.00 | 1.00 | 1.00 | 0.00 | 1.00 | 1.00 | 1.00 | 1.00 |
| Uniform Delay (d), s/veh | 22.5 | 18.2 | 16.1 | 18.4 | 0.0 | 18.3 | 8.4 | 0.0 | 9.2 | 8.9 | 12.0 | 11.7 |
| Incr Delay (d2), s/veh | 1.4 | 0.0 | 0.3 | 0.0 | 0.0 | 0.0 | 0.5 | 0.0 | 1.5 | 0.0 | 2.5 | 2.5 |
| Initial Q Delay(d3),s/veh | 0.0 | 0.0 | 0.0 | 0.0 | 0.0 | 0.0 | 0.0 | 0.0 | 0.0 | 0.0 | 0.0 | 0.0 |
| %ile BackOfQ(95%),veh/ln | 5.5 | 0.2 | 2.3 | 0.0 | 0.0 | 0.3 | 1.5 | 0.0 | 5.6 | 0.1 | 7.7 | 5.9 |
| Unsig. Movement Delay, s/veh | | | | | | | | | | | | |
| LnGrp Delay(d),s/veh | 23.9 | 18.3 | 16.5 | 18.4 | 0.0 | 18.3 | 8.9 | 0.0 | 10.6 | 8.9 | 14.6 | 14.2 |
| LnGrp LOS | C | B | B | B | A | B | A | A | B | A | B | B |
| Approach Vol, veh/h | | 406 | | | 20 | | | 573 | | | 825 | |
| Approach Delay, s/veh | | 21.1 | | | 18.3 | | | 10.2 | | | 14.3 | |
| Approach LOS | | C | | | B | | | B | | | B | |

| Timer - Assigned Phs | 1 | 2 | | 4 | 5 | 6 | | 8 | | | | |
|---|---|---|---|---|---|---|---|---|---|---|---|---|
| Phs Duration (G+Y+Rc), s | 5.8 | 35.8 | | 18.4 | 9.6 | 32.0 | | 18.4 | | | | |
| Change Period (Y+Rc), s | 5.0 | 5.0 | | 5.0 | 5.0 | 5.0 | | 5.0 | | | | |
| Max Green Setting (Gmax), s | 5.0 | 22.0 | | 18.0 | 5.0 | 22.0 | | 18.0 | | | | |
| Max Q Clear Time (g_c+I1), s | 2.2 | 10.4 | | 12.8 | 4.6 | 12.7 | | 2.5 | | | | |
| Green Ext Time (p_c), s | 0.0 | 1.9 | | 0.6 | 0.0 | 2.9 | | 0.0 | | | | |

**Intersection Summary**

| | | | |
|---|---|---|---|
| HCM 6th Ctrl Delay | | 14.6 | |
| HCM 6th LOS | | B | |

| Intersection | |
|---|---|
| Intersection Delay, s/veh | 5.2 |
| Intersection LOS | A |

| Approach | EB | WB | SB |
|---|---|---|---|
| Entry Lanes | 2 | 2 | 1 |
| Conflicting Circle Lanes | 2 | 2 | 2 |
| Adj Approach Flow, veh/h | 610 | 461 | 276 |
| Demand Flow Rate, veh/h | 622 | 470 | 282 |
| Vehicles Circulating, veh/h | 201 | 54 | 310 |
| Vehicles Exiting, veh/h | 391 | 769 | 214 |
| Ped Vol Crossing Leg, #/h | 0 | 0 | 0 |
| Ped Cap Adj | 1.000 | 1.000 | 1.000 |
| Approach Delay, s/veh | 5.7 | 4.3 | 5.8 |
| Approach LOS | A | A | A |

| Lane | Left | Right | Left | Right | Left |
|---|---|---|---|---|---|
| Designated Moves | LT | TR | LT | TR | LR |
| Assumed Moves | LT | TR | LT | TR | LR |
| RT Channelized | | | | | |
| Lane Util | 0.469 | 0.531 | 0.470 | 0.530 | 1.000 |
| Follow-Up Headway, s | 2.667 | 2.535 | 2.667 | 2.535 | 2.535 |
| Critical Headway, s | 4.645 | 4.328 | 4.645 | 4.328 | 4.328 |
| Entry Flow, veh/h | 292 | 330 | 221 | 249 | 282 |
| Cap Entry Lane, veh/h | 1122 | 1197 | 1284 | 1356 | 1091 |
| Entry HV Adj Factor | 0.982 | 0.979 | 0.980 | 0.981 | 0.979 |
| Flow Entry, veh/h | 287 | 323 | 217 | 244 | 276 |
| Cap Entry, veh/h | 1101 | 1172 | 1259 | 1331 | 1068 |
| V/C Ratio | 0.260 | 0.276 | 0.172 | 0.184 | 0.258 |
| Control Delay, s/veh | 5.7 | 5.6 | 4.3 | 4.2 | 5.8 |
| LOS | A | A | A | A | A |
| 95th %tile Queue, veh | 1 | 1 | 1 | 1 | 1 |

| Intersection | |
|---|---|
| Intersection Delay, s/veh | 7.3 |
| Intersection LOS | A |

| Approach | EB | WB | SB |
|---|---|---|---|
| Entry Lanes | 2 | 2 | 1 |
| Conflicting Circle Lanes | 2 | 2 | 2 |
| Adj Approach Flow, veh/h | 752 | 710 | 455 |
| Demand Flow Rate, veh/h | 767 | 724 | 465 |
| Vehicles Circulating, veh/h | 384 | 54 | 422 |
| Vehicles Exiting, veh/h | 503 | 1097 | 356 |
| Ped Vol Crossing Leg, #/h | 0 | 0 | 0 |
| Ped Cap Adj | 1.000 | 1.000 | 1.000 |
| Approach Delay, s/veh | 8.0 | 5.2 | 9.3 |
| Approach LOS | A | A | A |

| Lane | Left | Right | Left | Right | Left |
|---|---|---|---|---|---|
| Designated Moves | LT | TR | LT | TR | LR |
| Assumed Moves | LT | TR | LT | TR | LR |
| RT Channelized | | | | | |
| Lane Util | 0.469 | 0.531 | 0.470 | 0.530 | 1.000 |
| Follow-Up Headway, s | 2.667 | 2.535 | 2.667 | 2.535 | 2.535 |
| Critical Headway, s | 4.645 | 4.328 | 4.645 | 4.328 | 4.328 |
| Entry Flow, veh/h | 360 | 407 | 340 | 384 | 465 |
| Cap Entry Lane, veh/h | 948 | 1025 | 1284 | 1356 | 992 |
| Entry HV Adj Factor | 0.982 | 0.979 | 0.981 | 0.980 | 0.978 |
| Flow Entry, veh/h | 353 | 399 | 334 | 376 | 455 |
| Cap Entry, veh/h | 931 | 1003 | 1260 | 1329 | 971 |
| V/C Ratio | 0.380 | 0.397 | 0.265 | 0.283 | 0.469 |
| Control Delay, s/veh | 8.1 | 7.9 | 5.2 | 5.2 | 9.3 |
| LOS | A | A | A | A | A |
| 95th %tile Queue, veh | 2 | 2 | 1 | 1 | 3 |

| Intersection | |
|---|---|
| Intersection Delay, s/veh | 5.1 |
| Intersection LOS | A |

| Approach | EB | WB | SB |
|---|---|---|---|
| Entry Lanes | 2 | 2 | 1 |
| Conflicting Circle Lanes | 2 | 2 | 2 |
| Adj Approach Flow, veh/h | 312 | 555 | 342 |
| Demand Flow Rate, veh/h | 318 | 566 | 349 |
| Vehicles Circulating, veh/h | 152 | 44 | 357 |
| Vehicles Exiting, veh/h | 554 | 426 | 253 |
| Ped Vol Crossing Leg, #/h | 0 | 0 | 0 |
| Ped Cap Adj | 1.000 | 1.000 | 1.000 |
| Approach Delay, s/veh | 4.1 | 4.6 | 6.9 |
| Approach LOS | A | A | A |

| Lane | Left | Right | Left | Right | Left |
|---|---|---|---|---|---|
| Designated Moves | LT | TR | LT | TR | LR |
| Assumed Moves | LT | TR | LT | TR | LR |
| RT Channelized | | | | | |
| Lane Util | 0.469 | 0.531 | 0.470 | 0.530 | 1.000 |
| Follow-Up Headway, s | 2.667 | 2.535 | 2.667 | 2.535 | 2.535 |
| Critical Headway, s | 4.645 | 4.328 | 4.645 | 4.328 | 4.328 |
| Entry Flow, veh/h | 149 | 169 | 266 | 300 | 349 |
| Cap Entry Lane, veh/h | 1174 | 1248 | 1296 | 1368 | 1048 |
| Entry HV Adj Factor | 0.983 | 0.977 | 0.981 | 0.980 | 0.980 |
| Flow Entry, veh/h | 146 | 165 | 261 | 294 | 342 |
| Cap Entry, veh/h | 1154 | 1220 | 1271 | 1341 | 1027 |
| V/C Ratio | 0.127 | 0.135 | 0.205 | 0.219 | 0.333 |
| Control Delay, s/veh | 4.2 | 4.1 | 4.6 | 4.5 | 6.9 |
| LOS | A | A | A | A | A |
| 95th %tile Queue, veh | 0 | 0 | 1 | 1 | 1 |

| Intersection | |
|---|---|
| Intersection Delay, s/veh | 7.2 |
| Intersection LOS | A |

| Approach | EB | WB | SB |
|---|---|---|---|
| Entry Lanes | 2 | 2 | 1 |
| Conflicting Circle Lanes | 2 | 2 | 2 |
| Adj Approach Flow, veh/h | 432 | 882 | 485 |
| Demand Flow Rate, veh/h | 441 | 900 | 495 |
| Vehicles Circulating, veh/h | 298 | 44 | 509 |
| Vehicles Exiting, veh/h | 706 | 695 | 435 |
| Ped Vol Crossing Leg, #/h | 0 | 0 | 0 |
| Ped Cap Adj | 1.000 | 1.000 | 1.000 |
| Approach Delay, s/veh | 5.4 | 5.8 | 11.2 |
| Approach LOS | A | A | B |

| Lane | Left | Right | Left | Right | Left |
|---|---|---|---|---|---|
| Designated Moves | LT | TR | LT | TR | LR |
| Assumed Moves | LT | TR | LT | TR | LR |
| RT Channelized | | | | | |
| Lane Util | 0.469 | 0.531 | 0.470 | 0.530 | 1.000 |
| Follow-Up Headway, s | 2.667 | 2.535 | 2.667 | 2.535 | 2.535 |
| Critical Headway, s | 4.645 | 4.328 | 4.645 | 4.328 | 4.328 |
| Entry Flow, veh/h | 207 | 234 | 423 | 477 | 495 |
| Cap Entry Lane, veh/h | 1026 | 1102 | 1296 | 1368 | 921 |
| Entry HV Adj Factor | 0.981 | 0.979 | 0.980 | 0.980 | 0.980 |
| Flow Entry, veh/h | 203 | 229 | 415 | 467 | 485 |
| Cap Entry, veh/h | 1007 | 1079 | 1270 | 1341 | 903 |
| V/C Ratio | 0.202 | 0.212 | 0.326 | 0.349 | 0.537 |
| Control Delay, s/veh | 5.5 | 5.3 | 5.8 | 5.9 | 11.2 |
| LOS | A | A | A | A | B |
| 95th %tile Queue, veh | 1 | 1 | 1 | 2 | 3 |

| Intersection | |
|---|---|
| Intersection Delay, s/veh | 4.3 |
| Intersection LOS | A |

| Approach | EB | WB | NB | SB |
|---|---|---|---|---|
| Entry Lanes | 2 | 2 | 1 | 1 |
| Conflicting Circle Lanes | 2 | 2 | 2 | 2 |
| Adj Approach Flow, veh/h | 518 | 395 | 23 | 73 |
| Demand Flow Rate, veh/h | 528 | 402 | 23 | 74 |
| Vehicles Circulating, veh/h | 93 | 27 | 550 | 419 |
| Vehicles Exiting, veh/h | 400 | 546 | 71 | 10 |
| Ped Vol Crossing Leg, #/h | 0 | 0 | 0 | 0 |
| Ped Cap Adj | 1.000 | 1.000 | 1.000 | 1.000 |
| Approach Delay, s/veh | 4.7 | 3.9 | 4.3 | 4.3 |
| Approach LOS | A | A | A | A |

| Lane | Left | Right | Left | Right | Left | Left |
|---|---|---|---|---|---|---|
| Designated Moves | LT | TR | LT | TR | LTR | LTR |
| Assumed Moves | LT | TR | LT | TR | LTR | LTR |
| RT Channelized | | | | | | |
| Lane Util | 0.470 | 0.530 | 0.470 | 0.530 | 1.000 | 1.000 |
| Follow-Up Headway, s | 2.667 | 2.535 | 2.667 | 2.535 | 2.535 | 2.535 |
| Critical Headway, s | 4.645 | 4.328 | 4.645 | 4.328 | 4.328 | 4.328 |
| Entry Flow, veh/h | 248 | 280 | 189 | 213 | 23 | 74 |
| Cap Entry Lane, veh/h | 1239 | 1312 | 1317 | 1388 | 890 | 995 |
| Entry HV Adj Factor | 0.982 | 0.981 | 0.981 | 0.981 | 1.000 | 0.986 |
| Flow Entry, veh/h | 243 | 275 | 185 | 209 | 23 | 73 |
| Cap Entry, veh/h | 1217 | 1287 | 1291 | 1362 | 890 | 981 |
| V/C Ratio | 0.200 | 0.213 | 0.144 | 0.153 | 0.026 | 0.074 |
| Control Delay, s/veh | 4.7 | 4.6 | 4.0 | 3.9 | 4.3 | 4.3 |
| LOS | A | A | A | A | A | A |
| 95th %tile Queue, veh | 1 | 1 | 1 | 1 | 0 | 0 |

| Intersection | |
|---|---|
| Intersection Delay, s/veh | 5.3 |
| Intersection LOS | A |

| Approach | EB | WB | NB | SB |
|---|---|---|---|---|
| Entry Lanes | 2 | 2 | 1 | 1 |
| Conflicting Circle Lanes | 2 | 2 | 2 | 2 |
| Adj Approach Flow, veh/h | 781 | 591 | 23 | 74 |
| Demand Flow Rate, veh/h | 796 | 603 | 23 | 75 |
| Vehicles Circulating, veh/h | 95 | 27 | 824 | 619 |
| Vehicles Exiting, veh/h | 599 | 820 | 67 | 11 |
| Ped Vol Crossing Leg, #/h | 0 | 0 | 0 | 0 |
| Ped Cap Adj | 1.000 | 1.000 | 1.000 | 1.000 |
| Approach Delay, s/veh | 5.7 | 4.6 | 5.4 | 5.2 |
| Approach LOS | A | A | A | A |

| Lane | Left | Right | Left | Right | Left | Left |
|---|---|---|---|---|---|---|
| Designated Moves | LT | TR | LT | TR | LTR | LTR |
| Assumed Moves | LT | TR | LT | TR | LTR | LTR |
| RT Channelized | | | | | | |
| Lane Util | 0.470 | 0.530 | 0.469 | 0.531 | 1.000 | 1.000 |
| Follow-Up Headway, s | 2.667 | 2.535 | 2.667 | 2.535 | 2.535 | 2.535 |
| Critical Headway, s | 4.645 | 4.328 | 4.645 | 4.328 | 4.328 | 4.328 |
| Entry Flow, veh/h | 374 | 422 | 283 | 320 | 23 | 75 |
| Cap Entry Lane, veh/h | 1237 | 1310 | 1317 | 1388 | 705 | 839 |
| Entry HV Adj Factor | 0.981 | 0.981 | 0.982 | 0.979 | 1.000 | 0.986 |
| Flow Entry, veh/h | 367 | 414 | 278 | 313 | 23 | 74 |
| Cap Entry, veh/h | 1214 | 1284 | 1293 | 1359 | 705 | 828 |
| V/C Ratio | 0.302 | 0.322 | 0.215 | 0.231 | 0.033 | 0.089 |
| Control Delay, s/veh | 5.8 | 5.7 | 4.6 | 4.6 | 5.4 | 5.2 |
| LOS | A | A | A | A | A | A |
| 95th %tile Queue, veh | 1 | 1 | 1 | 1 | 0 | 0 |

| Intersection | |
|---|---|
| Intersection Delay, s/veh | 5.3 |
| Intersection LOS | A |

| Approach | EB | WB | NB | SB |
|---|---|---|---|---|
| Entry Lanes | 2 | 2 | 1 | 1 |
| Conflicting Circle Lanes | 2 | 2 | 2 | 2 |
| Adj Approach Flow, veh/h | 620 | 636 | 116 | 97 |
| Demand Flow Rate, veh/h | 632 | 648 | 118 | 99 |
| Vehicles Circulating, veh/h | 77 | 129 | 599 | 724 |
| Vehicles Exiting, veh/h | 746 | 588 | 110 | 53 |
| Ped Vol Crossing Leg, #/h | 0 | 0 | 0 | 0 |
| Ped Cap Adj | 1.000 | 1.000 | 1.000 | 1.000 |
| Approach Delay, s/veh | 5.0 | 5.3 | 5.7 | 6.1 |
| Approach LOS | A | A | A | A |

| Lane | Left | Right | Left | Right | Left | Left |
|---|---|---|---|---|---|---|
| Designated Moves | LT | TR | LT | TR | LTR | LTR |
| Assumed Moves | LT | TR | LT | TR | LTR | LTR |
| RT Channelized | | | | | | |
| Lane Util | 0.470 | 0.530 | 0.471 | 0.529 | 1.000 | 1.000 |
| Follow-Up Headway, s | 2.667 | 2.535 | 2.667 | 2.535 | 2.535 | 2.535 |
| Critical Headway, s | 4.645 | 4.328 | 4.645 | 4.328 | 4.328 | 4.328 |
| Entry Flow, veh/h | 297 | 335 | 305 | 343 | 118 | 99 |
| Cap Entry Lane, veh/h | 1258 | 1330 | 1199 | 1273 | 853 | 767 |
| Entry HV Adj Factor | 0.980 | 0.980 | 0.980 | 0.982 | 0.983 | 0.983 |
| Flow Entry, veh/h | 291 | 328 | 299 | 337 | 116 | 97 |
| Cap Entry, veh/h | 1233 | 1304 | 1175 | 1250 | 839 | 755 |
| V/C Ratio | 0.236 | 0.252 | 0.254 | 0.270 | 0.138 | 0.129 |
| Control Delay, s/veh | 5.0 | 4.9 | 5.4 | 5.3 | 5.7 | 6.1 |
| LOS | A | A | A | A | A | A |
| 95th %tile Queue, veh | 1 | 1 | 1 | 1 | 0 | 0 |

| Intersection | |
|---|---|
| Intersection Delay, s/veh | 7.1 |
| Intersection LOS | A |

| Approach | EB | WB | NB | SB |
|---|---|---|---|---|
| Entry Lanes | 2 | 2 | 1 | 1 |
| Conflicting Circle Lanes | 2 | 2 | 2 | 2 |
| Adj Approach Flow, veh/h | 986 | 1026 | 116 | 97 |
| Demand Flow Rate, veh/h | 1006 | 1047 | 118 | 99 |
| Vehicles Circulating, veh/h | 83 | 129 | 960 | 1122 |
| Vehicles Exiting, veh/h | 1138 | 949 | 129 | 53 |
| Ped Vol Crossing Leg, #/h | 0 | 0 | 0 | 0 |
| Ped Cap Adj | 1.000 | 1.000 | 1.000 | 1.000 |
| Approach Delay, s/veh | 6.6 | 7.3 | 8.1 | 9.1 |
| Approach LOS | A | A | A | A |

| Lane | Left | Right | Left | Right | Left | Left |
|---|---|---|---|---|---|---|
| Designated Moves | LT | TR | LT | TR | LTR | LTR |
| Assumed Moves | LT | TR | LT | TR | LTR | LTR |
| RT Channelized | | | | | | |
| Lane Util | 0.470 | 0.530 | 0.470 | 0.530 | 1.000 | 1.000 |
| Follow-Up Headway, s | 2.667 | 2.535 | 2.667 | 2.535 | 2.535 | 2.535 |
| Critical Headway, s | 4.645 | 4.328 | 4.645 | 4.328 | 4.328 | 4.328 |
| Entry Flow, veh/h | 473 | 533 | 492 | 555 | 118 | 99 |
| Cap Entry Lane, veh/h | 1251 | 1323 | 1199 | 1273 | 628 | 547 |
| Entry HV Adj Factor | 0.980 | 0.981 | 0.980 | 0.980 | 0.983 | 0.983 |
| Flow Entry, veh/h | 464 | 523 | 482 | 544 | 116 | 97 |
| Cap Entry, veh/h | 1226 | 1298 | 1175 | 1247 | 617 | 538 |
| V/C Ratio | 0.378 | 0.403 | 0.410 | 0.436 | 0.188 | 0.181 |
| Control Delay, s/veh | 6.6 | 6.6 | 7.2 | 7.3 | 8.1 | 9.1 |
| LOS | A | A | A | A | A | A |
| 95th %tile Queue, veh | 2 | 2 | 2 | 2 | 1 | 1 |

| Intersection | |
|---|---|
| Intersection Delay, s/veh | 6.5 |
| Intersection LOS | A |

| Approach | EB | WB | SB |
|---|---|---|---|
| Entry Lanes | 1 | 1 | 1 |
| Conflicting Circle Lanes | 1 | 1 | 1 |
| Adj Approach Flow, veh/h | 556 | 437 | 120 |
| Demand Flow Rate, veh/h | 567 | 446 | 122 |
| Vehicles Circulating, veh/h | 50 | 72 | 339 |
| Vehicles Exiting, veh/h | 411 | 545 | 179 |
| Ped Vol Crossing Leg, #/h | 0 | 0 | 0 |
| Ped Cap Adj | 1.000 | 1.000 | 1.000 |
| Approach Delay, s/veh | 7.1 | 6.1 | 4.9 |
| Approach LOS | A | A | A |

| Lane | Left | Left | Left |
|---|---|---|---|
| Designated Moves | LT | TR | LR |
| Assumed Moves | LT | TR | LR |
| RT Channelized | | | |
| Lane Util | 1.000 | 1.000 | 1.000 |
| Follow-Up Headway, s | 2.609 | 2.609 | 2.609 |
| Critical Headway, s | 4.976 | 4.976 | 4.976 |
| Entry Flow, veh/h | 567 | 446 | 122 |
| Cap Entry Lane, veh/h | 1311 | 1282 | 977 |
| Entry HV Adj Factor | 0.981 | 0.981 | 0.984 |
| Flow Entry, veh/h | 556 | 437 | 120 |
| Cap Entry, veh/h | 1286 | 1257 | 961 |
| V/C Ratio | 0.432 | 0.348 | 0.125 |
| Control Delay, s/veh | 7.1 | 6.1 | 4.9 |
| LOS | A | A | A |
| 95th %tile Queue, veh | 2 | 2 | 0 |

| Intersection | |
|---|---|
| Intersection Delay, s/veh | 10.5 |
| Intersection LOS | B |

| Approach | EB | WB | SB |
|---|---|---|---|
| Entry Lanes | 1 | 1 | 1 |
| Conflicting Circle Lanes | 1 | 1 | 1 |
| Adj Approach Flow, veh/h | 850 | 698 | 149 |
| Demand Flow Rate, veh/h | 867 | 712 | 152 |
| Vehicles Circulating, veh/h | 80 | 72 | 574 |
| Vehicles Exiting, veh/h | 646 | 875 | 210 |
| Ped Vol Crossing Leg, #/h | 0 | 0 | 0 |
| Ped Cap Adj | 1.000 | 1.000 | 1.000 |
| Approach Delay, s/veh | 12.2 | 9.2 | 6.9 |
| Approach LOS | B | A | A |

| Lane | Left | Left | Left |
|---|---|---|---|
| Designated Moves | LT | TR | LR |
| Assumed Moves | LT | TR | LR |
| RT Channelized | | | |
| Lane Util | 1.000 | 1.000 | 1.000 |
| Follow-Up Headway, s | 2.609 | 2.609 | 2.609 |
| Critical Headway, s | 4.976 | 4.976 | 4.976 |
| Entry Flow, veh/h | 867 | 712 | 152 |
| Cap Entry Lane, veh/h | 1272 | 1282 | 768 |
| Entry HV Adj Factor | 0.981 | 0.980 | 0.980 |
| Flow Entry, veh/h | 850 | 698 | 149 |
| Cap Entry, veh/h | 1247 | 1256 | 753 |
| V/C Ratio | 0.682 | 0.555 | 0.198 |
| Control Delay, s/veh | 12.2 | 9.2 | 6.9 |
| LOS | B | A | A |
| 95th %tile Queue, veh | 6 | 4 | 1 |

| Intersection | |
|---|---|
| Intersection Delay, s/veh | 6.0 |
| Intersection LOS | A |

| Approach | EB | WB | SB |
|---|---|---|---|
| Entry Lanes | 1 | 1 | 1 |
| Conflicting Circle Lanes | 1 | 1 | 1 |
| Adj Approach Flow, veh/h | 380 | 500 | 104 |
| Demand Flow Rate, veh/h | 388 | 510 | 106 |
| Vehicles Circulating, veh/h | 45 | 54 | 442 |
| Vehicles Exiting, veh/h | 503 | 379 | 122 |
| Ped Vol Crossing Leg, #/h | 0 | 0 | 0 |
| Ped Cap Adj | 1.000 | 1.000 | 1.000 |
| Approach Delay, s/veh | 5.4 | 6.6 | 5.3 |
| Approach LOS | A | A | A |

| Lane | Left | Left | Left |
|---|---|---|---|
| Designated Moves | LT | TR | LR |
| Assumed Moves | LT | TR | LR |
| RT Channelized | | | |
| Lane Util | 1.000 | 1.000 | 1.000 |
| Follow-Up Headway, s | 2.609 | 2.609 | 2.609 |
| Critical Headway, s | 4.976 | 4.976 | 4.976 |
| Entry Flow, veh/h | 388 | 510 | 106 |
| Cap Entry Lane, veh/h | 1318 | 1306 | 879 |
| Entry HV Adj Factor | 0.981 | 0.981 | 0.981 |
| Flow Entry, veh/h | 380 | 500 | 104 |
| Cap Entry, veh/h | 1292 | 1281 | 863 |
| V/C Ratio | 0.294 | 0.391 | 0.121 |
| Control Delay, s/veh | 5.4 | 6.6 | 5.3 |
| LOS | A | A | A |
| 95th %tile Queue, veh | 1 | 2 | 0 |

| Intersection | |
|---|---|
| Intersection Delay, s/veh | 10.3 |
| Intersection LOS | B |

| Approach | EB | WB | SB |
|---|---|---|---|
| Entry Lanes | 1 | 1 | 1 |
| Conflicting Circle Lanes | 1 | 1 | 1 |
| Adj Approach Flow, veh/h | 652 | 866 | 132 |
| Demand Flow Rate, veh/h | 665 | 883 | 134 |
| Vehicles Circulating, veh/h | 73 | 54 | 787 |
| Vehicles Exiting, veh/h | 848 | 684 | 150 |
| Ped Vol Crossing Leg, #/h | 0 | 0 | 0 |
| Ped Cap Adj | 1.000 | 1.000 | 1.000 |
| Approach Delay, s/veh | 8.5 | 11.8 | 8.6 |
| Approach LOS | A | B | A |

| Lane | Left | Left | Left |
|---|---|---|---|
| Designated Moves | LT | TR | LR |
| Assumed Moves | LT | TR | LR |
| RT Channelized | | | |
| Lane Util | 1.000 | 1.000 | 1.000 |
| Follow-Up Headway, s | 2.609 | 2.609 | 2.609 |
| Critical Headway, s | 4.976 | 4.976 | 4.976 |
| Entry Flow, veh/h | 665 | 883 | 134 |
| Cap Entry Lane, veh/h | 1281 | 1306 | 618 |
| Entry HV Adj Factor | 0.980 | 0.980 | 0.985 |
| Flow Entry, veh/h | 652 | 866 | 132 |
| Cap Entry, veh/h | 1256 | 1280 | 609 |
| V/C Ratio | 0.519 | 0.676 | 0.217 |
| Control Delay, s/veh | 8.5 | 11.8 | 8.6 |
| LOS | A | B | A |
| 95th %tile Queue, veh | 3 | 6 | 1 |

| Intersection | |
|---|---|
| Intersection Delay, s/veh | 6.0 |
| Intersection LOS | A |

| Approach | EB | WB | NB | SB |
|---|---|---|---|---|
| Entry Lanes | 1 | 1 | 1 | 1 |
| Conflicting Circle Lanes | 1 | 1 | 1 | 1 |
| Adj Approach Flow, veh/h | 447 | 359 | 47 | 116 |
| Demand Flow Rate, veh/h | 456 | 366 | 48 | 118 |
| Vehicles Circulating, veh/h | 153 | 64 | 363 | 371 |
| Vehicles Exiting, veh/h | 336 | 347 | 245 | 59 |
| Ped Vol Crossing Leg, #/h | 0 | 0 | 0 | 0 |
| Ped Cap Adj | 1.000 | 1.000 | 1.000 | 1.000 |
| Approach Delay, s/veh | 7.0 | 5.4 | 4.3 | 5.1 |
| Approach LOS | A | A | A | A |

| Lane | Left | Left | Left | Left |
|---|---|---|---|---|
| Designated Moves | LTR | LTR | LTR | LTR |
| Assumed Moves | LTR | LTR | LTR | LTR |
| RT Channelized | | | | |
| Lane Util | 1.000 | 1.000 | 1.000 | 1.000 |
| Follow-Up Headway, s | 2.609 | 2.609 | 2.609 | 2.609 |
| Critical Headway, s | 4.976 | 4.976 | 4.976 | 4.976 |
| Entry Flow, veh/h | 456 | 366 | 48 | 118 |
| Cap Entry Lane, veh/h | 1180 | 1293 | 953 | 945 |
| Entry HV Adj Factor | 0.979 | 0.981 | 0.978 | 0.980 |
| Flow Entry, veh/h | 447 | 359 | 47 | 116 |
| Cap Entry, veh/h | 1156 | 1268 | 932 | 926 |
| V/C Ratio | 0.386 | 0.283 | 0.050 | 0.125 |
| Control Delay, s/veh | 7.0 | 5.4 | 4.3 | 5.1 |
| LOS | A | A | A | A |
| 95th %tile Queue, veh | 2 | 1 | 0 | 0 |

| Intersection | |
|---|---|
| Intersection Delay, s/veh | 10.0 |
| Intersection LOS | A |

| Approach | EB | WB | NB | SB |
|---|---|---|---|---|
| Entry Lanes | 1 | 1 | 1 | 1 |
| Conflicting Circle Lanes | 1 | 1 | 1 | 1 |
| Adj Approach Flow, veh/h | 720 | 515 | 187 | 117 |
| Demand Flow Rate, veh/h | 734 | 525 | 191 | 119 |
| Vehicles Circulating, veh/h | 206 | 181 | 467 | 645 |
| Vehicles Exiting, veh/h | 558 | 477 | 472 | 61 |
| Ped Vol Crossing Leg, #/h | 0 | 0 | 0 | 0 |
| Ped Cap Adj | 1.000 | 1.000 | 1.000 | 1.000 |
| Approach Delay, s/veh | 12.6 | 8.2 | 6.6 | 7.0 |
| Approach LOS | B | A | A | A |

| Lane | Left | Left | Left | Left |
|---|---|---|---|---|
| Designated Moves | LTR | LTR | LTR | LTR |
| Assumed Moves | LTR | LTR | LTR | LTR |
| RT Channelized | | | | |
| Lane Util | 1.000 | 1.000 | 1.000 | 1.000 |
| Follow-Up Headway, s | 2.609 | 2.609 | 2.609 | 2.609 |
| Critical Headway, s | 4.976 | 4.976 | 4.976 | 4.976 |
| Entry Flow, veh/h | 734 | 525 | 191 | 119 |
| Cap Entry Lane, veh/h | 1118 | 1147 | 857 | 715 |
| Entry HV Adj Factor | 0.980 | 0.981 | 0.979 | 0.980 |
| Flow Entry, veh/h | 720 | 515 | 187 | 117 |
| Cap Entry, veh/h | 1096 | 1125 | 839 | 701 |
| V/C Ratio | 0.656 | 0.458 | 0.223 | 0.166 |
| Control Delay, s/veh | 12.6 | 8.2 | 6.6 | 7.0 |
| LOS | B | A | A | A |
| 95th %tile Queue, veh | 5 | 2 | 1 | 1 |

| Intersection | |
|---|---|
| Intersection Delay, s/veh | 6.3 |
| Intersection LOS | A |

| Approach | EB | WB | NB | SB |
|---|---|---|---|---|
| Entry Lanes | 1 | 1 | 1 | 1 |
| Conflicting Circle Lanes | 1 | 1 | 1 | 1 |
| Adj Approach Flow, veh/h | 371 | 379 | 220 | 67 |
| Demand Flow Rate, veh/h | 378 | 387 | 224 | 68 |
| Vehicles Circulating, veh/h | 78 | 250 | 342 | 528 |
| Vehicles Exiting, veh/h | 518 | 316 | 114 | 109 |
| Ped Vol Crossing Leg, #/h | 0 | 0 | 0 | 0 |
| Ped Cap Adj | 1.000 | 1.000 | 1.000 | 1.000 |
| Approach Delay, s/veh | 5.6 | 7.2 | 6.0 | 5.4 |
| Approach LOS | A | A | A | A |

| Lane | Left | Left | Left | Left |
|---|---|---|---|---|
| Designated Moves | LTR | LTR | LTR | LTR |
| Assumed Moves | LTR | LTR | LTR | LTR |
| RT Channelized | | | | |
| Lane Util | 1.000 | 1.000 | 1.000 | 1.000 |
| Follow-Up Headway, s | 2.609 | 2.609 | 2.609 | 2.609 |
| Critical Headway, s | 4.976 | 4.976 | 4.976 | 4.976 |
| Entry Flow, veh/h | 378 | 387 | 224 | 68 |
| Cap Entry Lane, veh/h | 1274 | 1069 | 974 | 805 |
| Entry HV Adj Factor | 0.981 | 0.979 | 0.980 | 0.983 |
| Flow Entry, veh/h | 371 | 379 | 220 | 67 |
| Cap Entry, veh/h | 1250 | 1047 | 954 | 792 |
| V/C Ratio | 0.297 | 0.362 | 0.230 | 0.084 |
| Control Delay, s/veh | 5.6 | 7.2 | 6.0 | 5.4 |
| LOS | A | A | A | A |
| 95th %tile Queue, veh | 1 | 2 | 1 | 0 |

| Intersection | |
|---|---|
| Intersection Delay, s/veh | 12.2 |
| Intersection LOS | B |

| Approach | EB | WB | NB | SB |
|---|---|---|---|---|
| Entry Lanes | 1 | 1 | 1 | 1 |
| Conflicting Circle Lanes | 1 | 1 | 1 | 1 |
| Adj Approach Flow, veh/h | 640 | 492 | 501 | 69 |
| Demand Flow Rate, veh/h | 653 | 502 | 511 | 70 |
| Vehicles Circulating, veh/h | 107 | 501 | 526 | 891 |
| Vehicles Exiting, veh/h | 854 | 536 | 234 | 112 |
| Ped Vol Crossing Leg, #/h | 0 | 0 | 0 | 0 |
| Ped Cap Adj | 1.000 | 1.000 | 1.000 | 1.000 |
| Approach Delay, s/veh | 8.9 | 14.1 | 15.2 | 8.2 |
| Approach LOS | A | B | C | A |

| Lane | Left | Left | Left | Left |
|---|---|---|---|---|
| Designated Moves | LTR | LTR | LTR | LTR |
| Assumed Moves | LTR | LTR | LTR | LTR |
| RT Channelized | | | | |
| Lane Util | 1.000 | 1.000 | 1.000 | 1.000 |
| Follow-Up Headway, s | 2.609 | 2.609 | 2.609 | 2.609 |
| Critical Headway, s | 4.976 | 4.976 | 4.976 | 4.976 |
| Entry Flow, veh/h | 653 | 502 | 511 | 70 |
| Cap Entry Lane, veh/h | 1237 | 828 | 807 | 556 |
| Entry HV Adj Factor | 0.980 | 0.981 | 0.980 | 0.983 |
| Flow Entry, veh/h | 640 | 492 | 501 | 69 |
| Cap Entry, veh/h | 1213 | 812 | 790 | 547 |
| V/C Ratio | 0.528 | 0.606 | 0.633 | 0.126 |
| Control Delay, s/veh | 8.9 | 14.1 | 15.2 | 8.2 |
| LOS | A | B | C | A |
| 95th %tile Queue, veh | 3 | 4 | 5 | 0 |

| Intersection | |
|---|---|
| Int Delay, s/veh | 0.3 |

| Movement | EBT | EBR | WBL | WBT | NBL | NBR |
|---|---|---|---|---|---|---|
| Lane Configurations | ↑ | ↱ | | ↑ | | ↱ |
| Traffic Vol, veh/h | 296 | 21 | 0 | 334 | 0 | 19 |
| Future Vol, veh/h | 296 | 21 | 0 | 334 | 0 | 19 |
| Conflicting Peds, #/hr | 0 | 0 | 0 | 0 | 0 | 0 |
| Sign Control | Free | Free | Free | Free | Stop | Stop |
| RT Channelized | - | None | - | None | - | None |
| Storage Length | - | 0 | - | - | - | 0 |
| Veh in Median Storage, # | 0 | - | - | 0 | 0 | - |
| Grade, % | 0 | - | - | 0 | 0 | - |
| Peak Hour Factor | 90 | 90 | 90 | 90 | 90 | 90 |
| Heavy Vehicles, % | 2 | 2 | 2 | 2 | 2 | 2 |
| Mvmt Flow | 329 | 23 | 0 | 371 | 0 | 21 |

| Major/Minor | Major1 | | Major2 | | Minor1 | |
|---|---|---|---|---|---|---|
| Conflicting Flow All | 0 | 0 | - | - | - | 329 |
| Stage 1 | - | - | - | - | - | - |
| Stage 2 | - | - | - | - | - | - |
| Critical Hdwy | - | - | - | - | - | 6.22 |
| Critical Hdwy Stg 1 | - | - | - | - | - | - |
| Critical Hdwy Stg 2 | - | - | - | - | - | - |
| Follow-up Hdwy | - | - | - | - | - | 3.318 |
| Pot Cap-1 Maneuver | - | - | 0 | - | 0 | 712 |
| Stage 1 | - | - | 0 | - | 0 | - |
| Stage 2 | - | - | 0 | - | 0 | - |
| Platoon blocked, % | - | - | | - | | |
| Mov Cap-1 Maneuver | - | - | - | - | - | 712 |
| Mov Cap-2 Maneuver | - | - | - | - | - | - |
| Stage 1 | - | - | - | - | - | - |
| Stage 2 | - | - | - | - | - | - |

| Approach | EB | WB | NB |
|---|---|---|---|
| HCM Control Delay, s | 0 | 0 | 10.2 |
| HCM LOS | | | B |

| Minor Lane/Major Mvmt | NBLn1 | EBT | EBR | WBT |
|---|---|---|---|---|
| Capacity (veh/h) | 712 | - | - | - |
| HCM Lane V/C Ratio | 0.03 | - | - | - |
| HCM Control Delay (s) | 10.2 | - | - | - |
| HCM Lane LOS | B | - | - | - |
| HCM 95th %tile Q(veh) | 0.1 | - | - | - |

| Intersection | |
|---|---|
| Int Delay, s/veh | 0.2 |

| Movement | EBT | EBR | WBL | WBT | NBL | NBR |
|---|---|---|---|---|---|---|
| Lane Configurations | ↑ | ↱ | | ↑ | | ↱ |
| Traffic Vol, veh/h | 335 | 82 | 0 | 479 | 0 | 21 |
| Future Vol, veh/h | 335 | 82 | 0 | 479 | 0 | 21 |
| Conflicting Peds, #/hr | 0 | 0 | 0 | 0 | 0 | 0 |
| Sign Control | Free | Free | Free | Free | Stop | Stop |
| RT Channelized | - | None | - | None | - | None |
| Storage Length | - | 0 | - | - | - | 0 |
| Veh in Median Storage, # | 0 | - | - | 0 | 0 | - |
| Grade, % | 0 | - | - | 0 | 0 | - |
| Peak Hour Factor | 90 | 90 | 90 | 90 | 90 | 90 |
| Heavy Vehicles, % | 2 | 2 | 2 | 2 | 2 | 2 |
| Mvmt Flow | 372 | 91 | 0 | 532 | 0 | 23 |

| Major/Minor | Major1 | | Major2 | | Minor1 | |
|---|---|---|---|---|---|---|
| Conflicting Flow All | 0 | 0 | - | - | - | 372 |
| Stage 1 | - | - | - | - | - | - |
| Stage 2 | - | - | - | - | - | - |
| Critical Hdwy | - | - | - | - | - | 6.22 |
| Critical Hdwy Stg 1 | - | - | - | - | - | - |
| Critical Hdwy Stg 2 | - | - | - | - | - | - |
| Follow-up Hdwy | - | - | - | - | - | 3.318 |
| Pot Cap-1 Maneuver | - | - | 0 | - | 0 | 674 |
| Stage 1 | - | - | 0 | - | 0 | - |
| Stage 2 | - | - | 0 | - | 0 | - |
| Platoon blocked, % | - | - | | - | | |
| Mov Cap-1 Maneuver | - | - | - | - | - | 674 |
| Mov Cap-2 Maneuver | - | - | - | - | - | - |
| Stage 1 | - | - | - | - | - | - |
| Stage 2 | - | - | - | - | - | - |

| Approach | EB | WB | NB |
|---|---|---|---|
| HCM Control Delay, s | 0 | 0 | 10.5 |
| HCM LOS | | | B |

| Minor Lane/Major Mvmt | NBLn1 | EBT | EBR | WBT |
|---|---|---|---|---|
| Capacity (veh/h) | 674 | - | - | - |
| HCM Lane V/C Ratio | 0.035 | - | - | - |
| HCM Control Delay (s) | 10.5 | - | - | - |
| HCM Lane LOS | B | - | - | - |
| HCM 95th %tile Q(veh) | 0.1 | - | - | - |

| Intersection | |
|---|---|
| Int Delay, s/veh | 0.8 |

| Movement | EBT | EBR | WBL | WBT | NBL | NBR |
|---|---|---|---|---|---|---|
| Lane Configurations | ↑ | ↱ | | ↑ | | ↱ |
| Traffic Vol, veh/h | 282 | 12 | 0 | 360 | 0 | 52 |
| Future Vol, veh/h | 282 | 12 | 0 | 360 | 0 | 52 |
| Conflicting Peds, #/hr | 0 | 0 | 0 | 0 | 0 | 0 |
| Sign Control | Free | Free | Free | Free | Stop | Stop |
| RT Channelized | - | None | - | None | - | None |
| Storage Length | - | 0 | - | - | - | 0 |
| Veh in Median Storage, # | 0 | - | - | 0 | 0 | - |
| Grade, % | 0 | - | - | 0 | 0 | - |
| Peak Hour Factor | 90 | 90 | 90 | 90 | 90 | 90 |
| Heavy Vehicles, % | 2 | 2 | 2 | 2 | 2 | 2 |
| Mvmt Flow | 313 | 13 | 0 | 400 | 0 | 58 |

| Major/Minor | Major1 | | Major2 | | Minor1 | |
|---|---|---|---|---|---|---|
| Conflicting Flow All | 0 | 0 | - | - | - | 313 |
| Stage 1 | - | - | - | - | - | - |
| Stage 2 | - | - | - | - | - | - |
| Critical Hdwy | - | - | - | - | - | 6.22 |
| Critical Hdwy Stg 1 | - | - | - | - | - | - |
| Critical Hdwy Stg 2 | - | - | - | - | - | - |
| Follow-up Hdwy | - | - | - | - | - | 3.318 |
| Pot Cap-1 Maneuver | - | - | 0 | - | 0 | 727 |
| Stage 1 | - | - | 0 | - | 0 | - |
| Stage 2 | - | - | 0 | - | 0 | - |
| Platoon blocked, % | - | - | | - | | |
| Mov Cap-1 Maneuver | - | - | - | - | - | 727 |
| Mov Cap-2 Maneuver | - | - | - | - | - | - |
| Stage 1 | - | - | - | - | - | - |
| Stage 2 | - | - | - | - | - | - |

| Approach | EB | WB | NB |
|---|---|---|---|
| HCM Control Delay, s | 0 | 0 | 10.4 |
| HCM LOS | | | B |

| Minor Lane/Major Mvmt | NBLn1 | EBT | EBR | WBT |
|---|---|---|---|---|
| Capacity (veh/h) | 727 | - | - | - |
| HCM Lane V/C Ratio | 0.079 | - | - | - |
| HCM Control Delay (s) | 10.4 | - | - | - |
| HCM Lane LOS | B | - | - | - |
| HCM 95th %tile Q(veh) | 0.3 | - | - | - |

| Intersection | |
|---|---|
| Int Delay, s/veh | 0.8 |

| Movement | EBT | EBR | WBL | WBT | NBL | NBR |
|---|---|---|---|---|---|---|
| Lane Configurations | ↑ | ↱ | | ↑ | | ↱ |
| Traffic Vol, veh/h | 443 | 46 | 0 | 468 | 0 | 64 |
| Future Vol, veh/h | 443 | 46 | 0 | 468 | 0 | 64 |
| Conflicting Peds, #/hr | 0 | 0 | 0 | 0 | 0 | 0 |
| Sign Control | Free | Free | Free | Free | Stop | Stop |
| RT Channelized | - | None | - | None | - | None |
| Storage Length | - | 0 | - | - | - | 0 |
| Veh in Median Storage, # | 0 | - | - | 0 | 0 | - |
| Grade, % | 0 | - | - | 0 | 0 | - |
| Peak Hour Factor | 90 | 90 | 90 | 90 | 90 | 90 |
| Heavy Vehicles, % | 2 | 2 | 2 | 2 | 2 | 2 |
| Mvmt Flow | 492 | 51 | 0 | 520 | 0 | 71 |

| Major/Minor | Major1 | | Major2 | | Minor1 | |
|---|---|---|---|---|---|---|
| Conflicting Flow All | 0 | 0 | - | - | - | 492 |
| Stage 1 | - | - | - | - | - | - |
| Stage 2 | - | - | - | - | - | - |
| Critical Hdwy | - | - | - | - | - | 6.22 |
| Critical Hdwy Stg 1 | - | - | - | - | - | - |
| Critical Hdwy Stg 2 | - | - | - | - | - | - |
| Follow-up Hdwy | - | - | - | - | - | 3.318 |
| Pot Cap-1 Maneuver | - | - | 0 | - | 0 | 577 |
| Stage 1 | - | - | 0 | - | 0 | - |
| Stage 2 | - | - | 0 | - | 0 | - |
| Platoon blocked, % | - | - | | - | | |
| Mov Cap-1 Maneuver | - | - | - | - | - | 577 |
| Mov Cap-2 Maneuver | - | - | - | - | - | - |
| Stage 1 | - | - | - | - | - | - |
| Stage 2 | - | - | - | - | - | - |

| Approach | EB | WB | NB |
|---|---|---|---|
| HCM Control Delay, s | 0 | 0 | 12.1 |
| HCM LOS | | | B |

| Minor Lane/Major Mvmt | NBLn1 | EBT | EBR | WBT |
|---|---|---|---|---|
| Capacity (veh/h) | 577 | - | - | - |
| HCM Lane V/C Ratio | 0.123 | - | - | - |
| HCM Control Delay (s) | 12.1 | - | - | - |
| HCM Lane LOS | B | - | - | - |
| HCM 95th %tile Q(veh) | 0.4 | - | - | - |

Future Theoretical
Conceptual Driveways
for Tract 18A

# HCS Two-Way Stop-Control Report

## General Information

| | |
|---|---|
| Analyst | tob |
| Agency/Co. | Tierra West, LLC |
| Date Performed | 1/7/2024 |
| Analysis Year | 2025 |
| Time Analyzed | AM Peak |
| Intersection Orientation | East-West |
| Project Description | Las Soleras, Tracts 18A & 18B |

## Site Information

| | |
|---|---|
| Intersection | Beckner Rd. / Driveway "B" ("C") |
| Jurisdiction | City of Santa Fe |
| East/West Street | Beckner Rd. |
| North/South Street | Driveway "B" ("C") |
| Peak Hour Factor | 0.92 |
| Analysis Time Period (hrs) | 0.25 |

## Lanes

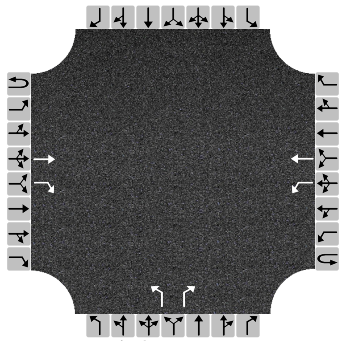


## Vehicle Volumes and Adjustments

| Approach | Eastbound | | | | Westbound | | | | Northbound | | | | Southbound | | | |
|---|---|---|---|---|---|---|---|---|---|---|---|---|---|---|---|---|
| Movement | U | L | T | R | U | L | T | R | U | L | T | R | U | L | T | R |
| Priority | 1U | 1 | 2 | 3 | 4U | 4 | 5 | 6 | | 7 | 8 | 9 | | 10 | 11 | 12 |
| Number of Lanes | 0 | 0 | 1 | 1 | 0 | 1 | 1 | 0 | | 1 | 0 | 1 | | 0 | 0 | 0 |
| Configuration | | | T | R | | L | T | | | L | | R | | | | |
| Volume (veh/h) | | | 350 | 11 | | 45 | 310 | | | 33 | | 9 | | | | |
| Percent Heavy Vehicles (%) | | | | | | 3 | | | | 3 | | 3 | | | | |
| Proportion Time Blocked | | | | | | | | | | | | | | | | |
| Percent Grade (%) | | | | | | | | | | 0 | | | | | | |
| Right Turn Channelized | | | No | | | | | | | No | | | | | | |
| Median Type \| Storage | | | Left Only | | | | | | | 1 | | | | | | |

## Critical and Follow-up Headways

| | | | | | | | | | | | | | | | | |
|---|---|---|---|---|---|---|---|---|---|---|---|---|---|---|---|---|
| Base Critical Headway (sec) | | | | | | 4.1 | | | | 7.1 | | 6.2 | | | | |
| Critical Headway (sec) | | | | | | 4.13 | | | | 6.43 | | 6.23 | | | | |
| Base Follow-Up Headway (sec) | | | | | | 2.2 | | | | 3.5 | | 3.3 | | | | |
| Follow-Up Headway (sec) | | | | | | 2.23 | | | | 3.53 | | 3.33 | | | | |

## Delay, Queue Length, and Level of Service

| | | | | | | | | | | | | | | | | |
|---|---|---|---|---|---|---|---|---|---|---|---|---|---|---|---|---|
| Flow Rate, v (veh/h) | | | | | | 49 | | | | 36 | | 10 | | | | |
| Capacity, c (veh/h) | | | | | | 1161 | | | | 449 | | 664 | | | | |
| v/c Ratio | | | | | | 0.04 | | | | 0.08 | | 0.01 | | | | |
| 95% Queue Length, $Q_{95}$ (veh) | | | | | | 0.1 | | | | 0.3 | | 0.0 | | | | |
| Control Delay (s/veh) | | | | | | 8.2 | | | | 13.7 | | 10.5 | | | | |
| Level of Service (LOS) | | | | | | A | | | | B | | B | | | | |
| Approach Delay (s/veh) | | | | | | 1.0 | | | | 13.0 | | | | | | |
| Approach LOS | | | | | | A | | | | B | | | | | | |

Copyright © 2024 University of Florida. All Rights Reserved.

# HCS Two-Way Stop-Control Report

## General Information

| | |
|---|---|
| Analyst | tob |
| Agency/Co. | Tierra West, LLC |
| Date Performed | 1/7/2024 |
| Analysis Year | 2025 |
| Time Analyzed | PM Peak |
| Intersection Orientation | East-West |
| Project Description | Las Soleras, Tracts 18A & 18B |

## Site Information

| | |
|---|---|
| Intersection | Beckner Rd. / Driveway "B" ("C") |
| Jurisdiction | City of Santa Fe |
| East/West Street | Beckner Rd. |
| North/South Street | Driveway "B" ("C") |
| Peak Hour Factor | 0.92 |
| Analysis Time Period (hrs) | 0.25 |

## Lanes

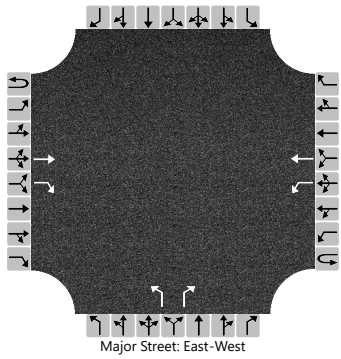


## Vehicle Volumes and Adjustments

| Approach | Eastbound | | | | Westbound | | | | Northbound | | | | Southbound | | | |
|---|---|---|---|---|---|---|---|---|---|---|---|---|---|---|---|---|
| Movement | U | L | T | R | U | L | T | R | U | L | T | R | U | L | T | R |
| Priority | 1U | 1 | 2 | 3 | 4U | 4 | 5 | 6 | | 7 | 8 | 9 | | 10 | 11 | 12 |
| Number of Lanes | 0 | 0 | 1 | 1 | 0 | 1 | 1 | 0 | | 1 | 0 | 1 | | 0 | 0 | 0 |
| Configuration | | | T | R | | L | T | | | L | | R | | | | |
| Volume (veh/h) | | | 450 | 50 | | 50 | 361 | | | 27 | | 7 | | | | |
| Percent Heavy Vehicles (%) | | | | | | 3 | | | | 3 | | 3 | | | | |
| Proportion Time Blocked | | | | | | | | | | | | | | | | |
| Percent Grade (%) | | | | | | | | | | 0 | | | | | | |
| Right Turn Channelized | | | No | | | | | | | No | | | | | | |
| Median Type \| Storage | | | Left Only | | | | | | | 1 | | | | | | |

## Critical and Follow-up Headways

| | | | | | | | | | | | | | | | | |
|---|---|---|---|---|---|---|---|---|---|---|---|---|---|---|---|---|
| Base Critical Headway (sec) | | | | | | 4.1 | | | | 7.1 | | 6.2 | | | | |
| Critical Headway (sec) | | | | | | 4.13 | | | | 6.43 | | 6.23 | | | | |
| Base Follow-Up Headway (sec) | | | | | | 2.2 | | | | 3.5 | | 3.3 | | | | |
| Follow-Up Headway (sec) | | | | | | 2.23 | | | | 3.53 | | 3.33 | | | | |

## Delay, Queue Length, and Level of Service

| | | | | | | | | | | | | | | | | |
|---|---|---|---|---|---|---|---|---|---|---|---|---|---|---|---|---|
| Flow Rate, v (veh/h) | | | | | | 54 | | | | 29 | | 8 | | | | |
| Capacity, c (veh/h) | | | | | | 1020 | | | | 388 | | 577 | | | | |
| v/c Ratio | | | | | | 0.05 | | | | 0.08 | | 0.01 | | | | |
| 95% Queue Length, $Q_{95}$ (veh) | | | | | | 0.2 | | | | 0.2 | | 0.0 | | | | |
| Control Delay (s/veh) | | | | | | 8.7 | | | | 15.0 | | 11.3 | | | | |
| Level of Service (LOS) | | | | | | A | | | | C | | B | | | | |
| Approach Delay (s/veh) | | | | | | 1.1 | | | | 14.3 | | | | | | |
| Approach LOS | | | | | | A | | | | B | | | | | | |

Copyright © 2024 University of Florida. All Rights Reserved.

# HCS Two-Way Stop-Control Report

## General Information

| | |
|---|---|
| Analyst | tob |
| Agency/Co. | Tierra West, LLC |
| Date Performed | 1/7/2024 |
| Analysis Year | 2025 |
| Time Analyzed | AM Peak |
| Intersection Orientation | East-West |
| Project Description | Las Soleras, Tracts 18A & 18B |

## Site Information

| | |
|---|---|
| Intersection | Beckner Rd. / Driveway "B" ("C") |
| Jurisdiction | City of Santa Fe |
| East/West Street | Beckner Rd. |
| North/South Street | Driveway "B" ("C") |
| Peak Hour Factor | 0.92 |
| Analysis Time Period (hrs) | 0.25 |

## Lanes

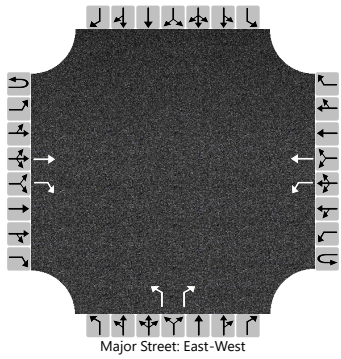


## Vehicle Volumes and Adjustments

| Approach | Eastbound | | | | Westbound | | | | Northbound | | | | Southbound | | | |
|---|---|---|---|---|---|---|---|---|---|---|---|---|---|---|---|---|
| Movement | U | L | T | R | U | L | T | R | U | L | T | R | U | L | T | R |
| Priority | 1U | 1 | 2 | 3 | 4U | 4 | 5 | 6 | | 7 | 8 | 9 | | 10 | 11 | 12 |
| Number of Lanes | 0 | 0 | 1 | 1 | 0 | 1 | 1 | 0 | | 1 | 0 | 1 | | 0 | 0 | 0 |
| Configuration | | | T | R | | L | T | | | L | | R | | | | |
| Volume (veh/h) | | | 400 | 11 | | 45 | 400 | | | 33 | | 9 | | | | |
| Percent Heavy Vehicles (%) | | | | | | 3 | | | | 3 | | 3 | | | | |
| Proportion Time Blocked | | | | | | | | | | | | | | | | |
| Percent Grade (%) | | | | | | | | | | 0 | | | | | | |
| Right Turn Channelized | | | No | | | | | | | No | | | | | | |
| Median Type \| Storage | | | Left Only | | | | | | | 1 | | | | | | |

## Critical and Follow-up Headways

| | | | | | | | | | | | | | | | | |
|---|---|---|---|---|---|---|---|---|---|---|---|---|---|---|---|---|
| Base Critical Headway (sec) | | | | | | 4.1 | | | | 7.1 | | 6.2 | | | | |
| Critical Headway (sec) | | | | | | 4.13 | | | | 6.43 | | 6.23 | | | | |
| Base Follow-Up Headway (sec) | | | | | | 2.2 | | | | 3.5 | | 3.3 | | | | |
| Follow-Up Headway (sec) | | | | | | 2.23 | | | | 3.53 | | 3.33 | | | | |

## Delay, Queue Length, and Level of Service

| | | | | | | | | | | | | | | | | |
|---|---|---|---|---|---|---|---|---|---|---|---|---|---|---|---|---|
| Flow Rate, v (veh/h) | | | | | | 49 | | | | 36 | | 10 | | | | |
| Capacity, c (veh/h) | | | | | | 1108 | | | | 396 | | 619 | | | | |
| v/c Ratio | | | | | | 0.04 | | | | 0.09 | | 0.02 | | | | |
| 95% Queue Length, $Q_{95}$ (veh) | | | | | | 0.1 | | | | 0.3 | | 0.0 | | | | |
| Control Delay (s/veh) | | | | | | 8.4 | | | | 15.0 | | 10.9 | | | | |
| Level of Service (LOS) | | | | | | A | | | | B | | B | | | | |
| Approach Delay (s/veh) | | | | | | 0.8 | | | | 14.1 | | | | | | |
| Approach LOS | | | | | | A | | | | B | | | | | | |

Copyright © 2024 University of Florida. All Rights Reserved.

# HCS Two-Way Stop-Control Report

## General Information

| | |
|---|---|
| Analyst | tob |
| Agency/Co. | Tierra West, LLC |
| Date Performed | 1/7/2024 |
| Analysis Year | 2035 |
| Time Analyzed | PM Peak |
| Intersection Orientation | East-West |
| Project Description | Las Soleras, Tracts 18A & 18B |

## Site Information

| | |
|---|---|
| Intersection | Beckner Rd. / Driveway "B" ("C") |
| Jurisdiction | City of Santa Fe |
| East/West Street | Beckner Rd. |
| North/South Street | Driveway "B" ("C") |
| Peak Hour Factor | 0.92 |
| Analysis Time Period (hrs) | 0.25 |

## Lanes

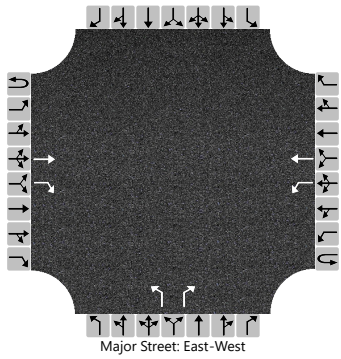


## Vehicle Volumes and Adjustments

| Approach | Eastbound | | | | Westbound | | | | Northbound | | | | Southbound | | | |
|---|---|---|---|---|---|---|---|---|---|---|---|---|---|---|---|---|
| Movement | U | L | T | R | U | L | T | R | U | L | T | R | U | L | T | R |
| Priority | 1U | 1 | 2 | 3 | 4U | 4 | 5 | 6 | | 7 | 8 | 9 | | 10 | 11 | 12 |
| Number of Lanes | 0 | 0 | 1 | 1 | 0 | 1 | 1 | 0 | | 1 | 0 | 1 | | 0 | 0 | 0 |
| Configuration | | | T | R | | L | T | | | L | | R | | | | |
| Volume (veh/h) | | | 500 | 50 | | 50 | 400 | | | 27 | | 7 | | | | |
| Percent Heavy Vehicles (%) | | | | | | 3 | | | | 3 | | 3 | | | | |
| Proportion Time Blocked | | | | | | | | | | | | | | | | |
| Percent Grade (%) | | | | | | | | | | 0 | | | | | | |
| Right Turn Channelized | | | No | | | | | | | No | | | | | | |
| Median Type \| Storage | | | Left Only | | | | | | | 1 | | | | | | |

## Critical and Follow-up Headways

| | | | | | | | | | | | | | | | | |
|---|---|---|---|---|---|---|---|---|---|---|---|---|---|---|---|---|
| Base Critical Headway (sec) | | | | | | 4.1 | | | | 7.1 | | 6.2 | | | | |
| Critical Headway (sec) | | | | | | 4.13 | | | | 6.43 | | 6.23 | | | | |
| Base Follow-Up Headway (sec) | | | | | | 2.2 | | | | 3.5 | | 3.3 | | | | |
| Follow-Up Headway (sec) | | | | | | 2.23 | | | | 3.53 | | 3.33 | | | | |

## Delay, Queue Length, and Level of Service

| | | | | | | | | | | | | | | | | |
|---|---|---|---|---|---|---|---|---|---|---|---|---|---|---|---|---|
| Flow Rate, v (veh/h) | | | | | | 54 | | | | 29 | | 8 | | | | |
| Capacity, c (veh/h) | | | | | | 974 | | | | 360 | | 537 | | | | |
| v/c Ratio | | | | | | 0.06 | | | | 0.08 | | 0.01 | | | | |
| 95% Queue Length, $Q_{95}$ (veh) | | | | | | 0.2 | | | | 0.3 | | 0.0 | | | | |
| Control Delay (s/veh) | | | | | | 8.9 | | | | 15.9 | | 11.8 | | | | |
| Level of Service (LOS) | | | | | | A | | | | C | | B | | | | |
| Approach Delay (s/veh) | | | | | | 1.0 | | | | 15.1 | | | | | | |
| Approach LOS | | | | | | A | | | | C | | | | | | |

Copyright © 2024 University of Florida. All Rights Reserved.

# HCS Roundabouts Report

## General Information

| | |
|---|---|
| Analyst | tob |
| Agency or Co. | Tierra West, LLC |
| Date Performed | 1/7/2024 |
| Analysis Year | 2025 |
| Time Analyzed | AM |
| Project Description | |

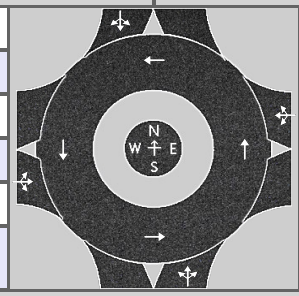


## Site Information

| | |
|---|---|
| Intersection | Beckner Rd. / Driveway "D" |
| E/W Street Name | Beckner Rd. |
| N/S Street Name | Driveway "D" (Calle de Alegr... |
| Analysis Time Period, hrs | 0.25 |
| Peak Hour Factor | 0.92 |
| Jurisdiction | City of Santa Fe |

## Volume Adjustments and Site Characteristics

| Approach | EB | | | | WB | | | | NB | | | | SB | | | |
|---|---|---|---|---|---|---|---|---|---|---|---|---|---|---|---|---|
| Movement | U | L | T | R | U | L | T | R | U | L | T | R | U | L | T | R |
| Number of Lanes (N) | 0 | 0 | 1 | 0 | 0 | 0 | 1 | 0 | 0 | 0 | 1 | 0 | 0 | 0 | 1 | 0 |
| Lane Assignment | | | LTR | | | | LTR | | | | LTR | | | | LTR | |
| Volume (V), veh/h | 0 | 50 | 300 | 15 | 0 | 50 | 400 | 50 | 0 | 40 | 5 | 10 | 0 | 50 | 5 | 50 |
| Percent Heavy Vehicles, % | 3 | 3 | 3 | 3 | 3 | 3 | 3 | 3 | 3 | 3 | 3 | 3 | 3 | 3 | 3 | 3 |
| Flow Rate ($v_{PCE}$), pc/h | 0 | 56 | 336 | 17 | 0 | 56 | 448 | 56 | 0 | 45 | 6 | 11 | 0 | 56 | 6 | 56 |
| Right-Turn Bypass | None | | | | None | | | | None | | | | None | | | |
| Conflicting Lanes | 1 | | | | 1 | | | | 1 | | | | 1 | | | |
| Pedestrians Crossing, p/h | 0 | | | | 0 | | | | 0 | | | | 0 | | | |
| Proportion of CAVs | 0 | | | | | | | | | | | | | | | |

## Critical and Follow-Up Headway Adjustment

| Approach | EB | | | WB | | | NB | | | SB | | |
|---|---|---|---|---|---|---|---|---|---|---|---|---|
| Lane | Left | Right | Bypass | Left | Right | Bypass | Left | Right | Bypass | Left | Right | Bypass |
| Critical Headway, s | | 4.9763 | | | 4.9763 | | | 4.9763 | | | 4.9763 | |
| Follow-Up Headway, s | | 2.6087 | | | 2.6087 | | | 2.6087 | | | 2.6087 | |

## Flow Computations, Capacity and v/c Ratios

| Approach | EB | | | WB | | | NB | | | SB | | |
|---|---|---|---|---|---|---|---|---|---|---|---|---|
| Lane | Left | Right | Bypass | Left | Right | Bypass | Left | Right | Bypass | Left | Right | Bypass |
| Entry Flow ($v_e$), pc/h | | 409 | | | 560 | | | 62 | | | 118 | |
| Entry Volume, veh/h | | 397 | | | 544 | | | 60 | | | 115 | |
| Circulating Flow ($v_c$), pc/h | 118 | | | 107 | | | 448 | | | 549 | | |
| Exiting Flow ($v_{ex}$), pc/h | 403 | | | 549 | | | 118 | | | 79 | | |
| Capacity ($c_{pce}$), pc/h | | 1224 | | | 1237 | | | 874 | | | 788 | |
| Capacity (c), veh/h | | 1188 | | | 1201 | | | 848 | | | 765 | |
| v/c Ratio (x) | | 0.33 | | | 0.45 | | | 0.07 | | | 0.15 | |

## Delay and Level of Service

| Approach | EB | | | WB | | | NB | | | SB | | |
|---|---|---|---|---|---|---|---|---|---|---|---|---|
| Lane | Left | Right | Bypass | Left | Right | Bypass | Left | Right | Bypass | Left | Right | Bypass |
| Lane Control Delay (d), s/veh | | 6.2 | | | 7.7 | | | 4.9 | | | 6.3 | |
| Lane LOS | | A | | | A | | | A | | | A | |
| 95% Queue, veh | | 1.5 | | | 2.4 | | | 0.2 | | | 0.5 | |
| Approach Delay, s/veh \| LOS | 6.2 | A | | 7.7 | A | | 4.9 | A | | 6.3 | A | |
| Intersection Delay, s/veh \| LOS | 6.9 | | | | | | A | | | | | |

Copyright © 2024 University of Florida. All Rights Reserved.

# HCS Roundabouts Report

## General Information

| | |
|---|---|
| Analyst | tob |
| Agency or Co. | Tierra West, LLC |
| Date Performed | 1/7/2024 |
| Analysis Year | 2025 |
| Time Analyzed | AM |
| Project Description | |

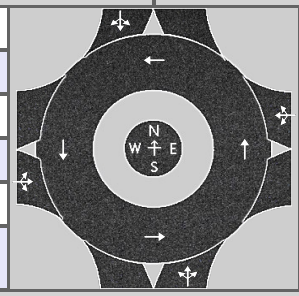


## Site Information

| | |
|---|---|
| Intersection | Beckner Rd. / Driveway "D" |
| E/W Street Name | Beckner Rd. |
| N/S Street Name | Driveway "D" (Calle de Alegr... |
| Analysis Time Period, hrs | 0.25 |
| Peak Hour Factor | 0.92 |
| Jurisdiction | City of Santa Fe |

## Volume Adjustments and Site Characteristics

| Approach | EB | | | | WB | | | | NB | | | | SB | | | |
|---|---|---|---|---|---|---|---|---|---|---|---|---|---|---|---|---|
| Movement | U | L | T | R | U | L | T | R | U | L | T | R | U | L | T | R |
| Number of Lanes (N) | 0 | 0 | 1 | 0 | 0 | 0 | 1 | 0 | 0 | 0 | 1 | 0 | 0 | 0 | 1 | 0 |
| Lane Assignment | | | LTR | | | | LTR | | | | LTR | | | | LTR | |
| Volume (V), veh/h | 0 | 50 | 300 | 15 | 0 | 50 | 400 | 50 | 0 | 40 | 5 | 10 | 0 | 50 | 5 | 50 |
| Percent Heavy Vehicles, % | 3 | 3 | 3 | 3 | 3 | 3 | 3 | 3 | 3 | 3 | 3 | 3 | 3 | 3 | 3 | 3 |
| Flow Rate ($v_{PCE}$), pc/h | 0 | 56 | 336 | 17 | 0 | 56 | 448 | 56 | 0 | 45 | 6 | 11 | 0 | 56 | 6 | 56 |
| Right-Turn Bypass | None | | | | None | | | | None | | | | None | | | |
| Conflicting Lanes | 1 | | | | 1 | | | | 1 | | | | 1 | | | |
| Pedestrians Crossing, p/h | 0 | | | | 0 | | | | 0 | | | | 0 | | | |
| Proportion of CAVs | 0 | | | | | | | | | | | | | | | |

## Critical and Follow-Up Headway Adjustment

| Approach | EB | | | WB | | | NB | | | SB | | |
|---|---|---|---|---|---|---|---|---|---|---|---|---|
| Lane | Left | Right | Bypass | Left | Right | Bypass | Left | Right | Bypass | Left | Right | Bypass |
| Critical Headway, s | | 4.9763 | | | 4.9763 | | | 4.9763 | | | 4.9763 | |
| Follow-Up Headway, s | | 2.6087 | | | 2.6087 | | | 2.6087 | | | 2.6087 | |

## Flow Computations, Capacity and v/c Ratios

| Approach | EB | | | WB | | | NB | | | SB | | |
|---|---|---|---|---|---|---|---|---|---|---|---|---|
| Lane | Left | Right | Bypass | Left | Right | Bypass | Left | Right | Bypass | Left | Right | Bypass |
| Entry Flow ($v_e$), pc/h | | 409 | | | 560 | | | 62 | | | 118 | |
| Entry Volume, veh/h | | 397 | | | 544 | | | 60 | | | 115 | |
| Circulating Flow ($v_c$), pc/h | 118 | | | 107 | | | 448 | | | 549 | | |
| Exiting Flow ($v_{ex}$), pc/h | 403 | | | 549 | | | 118 | | | 79 | | |
| Capacity ($c_{pce}$), pc/h | | 1224 | | | 1237 | | | 874 | | | 788 | |
| Capacity (c), veh/h | | 1188 | | | 1201 | | | 848 | | | 765 | |
| v/c Ratio (x) | | 0.33 | | | 0.45 | | | 0.07 | | | 0.15 | |

## Delay and Level of Service

| Approach | EB | | | WB | | | NB | | | SB | | |
|---|---|---|---|---|---|---|---|---|---|---|---|---|
| Lane | Left | Right | Bypass | Left | Right | Bypass | Left | Right | Bypass | Left | Right | Bypass |
| Lane Control Delay (d), s/veh | | 6.2 | | | 7.7 | | | 4.9 | | | 6.3 | |
| Lane LOS | | A | | | A | | | A | | | A | |
| 95% Queue, veh | | 1.5 | | | 2.4 | | | 0.2 | | | 0.5 | |
| Approach Delay, s/veh \| LOS | 6.2 | A | | 7.7 | A | | 4.9 | A | | 6.3 | A | |
| Intersection Delay, s/veh \| LOS | 6.9 | | | | | | A | | | | | |

Copyright © 2024 University of Florida. All Rights Reserved.

# HCS Roundabouts Report

## General Information

| | |
|---|---|
| Analyst | tob |
| Agency or Co. | Tierra West, LLC |
| Date Performed | 1/7/2024 |
| Analysis Year | 2025 |
| Time Analyzed | PM |
| Project Description | |

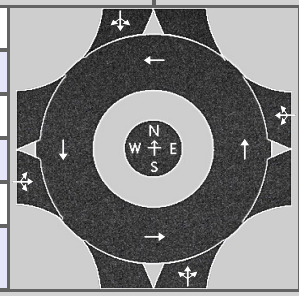


## Site Information

| | |
|---|---|
| Intersection | Beckner Rd. / Driveway "D" |
| E/W Street Name | Beckner Rd. |
| N/S Street Name | Driveway "D" (Calle de Alegr... |
| Analysis Time Period, hrs | 0.25 |
| Peak Hour Factor | 0.92 |
| Jurisdiction | City of Santa Fe |

## Volume Adjustments and Site Characteristics

| Approach | EB | | | | WB | | | | NB | | | | SB | | | |
|---|---|---|---|---|---|---|---|---|---|---|---|---|---|---|---|---|
| Movement | U | L | T | R | U | L | T | R | U | L | T | R | U | L | T | R |
| Number of Lanes (N) | 0 | 0 | 1 | 0 | 0 | 0 | 1 | 0 | 0 | 0 | 1 | 0 | 0 | 0 | 1 | 0 |
| Lane Assignment | | | LTR | | | | LTR | | | | LTR | | | | LTR | |
| Volume (V), veh/h | 0 | 50 | 320 | 15 | 0 | 50 | 370 | 50 | 0 | 35 | 5 | 10 | 0 | 50 | 5 | 50 |
| Percent Heavy Vehicles, % | 3 | 3 | 3 | 3 | 3 | 3 | 3 | 3 | 3 | 3 | 3 | 3 | 3 | 3 | 3 | 3 |
| Flow Rate ($v_{PCE}$), pc/h | 0 | 56 | 358 | 17 | 0 | 56 | 414 | 56 | 0 | 39 | 6 | 11 | 0 | 56 | 6 | 56 |
| Right-Turn Bypass | None | | | | None | | | | None | | | | None | | | |
| Conflicting Lanes | 1 | | | | 1 | | | | 1 | | | | 1 | | | |
| Pedestrians Crossing, p/h | 0 | | | | 0 | | | | 0 | | | | 0 | | | |
| Proportion of CAVs | 0 | | | | | | | | | | | | | | | |

## Critical and Follow-Up Headway Adjustment

| Approach | EB | | | WB | | | NB | | | SB | | |
|---|---|---|---|---|---|---|---|---|---|---|---|---|
| Lane | Left | Right | Bypass | Left | Right | Bypass | Left | Right | Bypass | Left | Right | Bypass |
| Critical Headway, s | | 4.9763 | | | 4.9763 | | | 4.9763 | | | 4.9763 | |
| Follow-Up Headway, s | | 2.6087 | | | 2.6087 | | | 2.6087 | | | 2.6087 | |

## Flow Computations, Capacity and v/c Ratios

| Approach | EB | | | WB | | | NB | | | SB | | |
|---|---|---|---|---|---|---|---|---|---|---|---|---|
| Lane | Left | Right | Bypass | Left | Right | Bypass | Left | Right | Bypass | Left | Right | Bypass |
| Entry Flow ($v_e$), pc/h | | 431 | | | 526 | | | 56 | | | 118 | |
| Entry Volume, veh/h | | 418 | | | 511 | | | 54 | | | 115 | |
| Circulating Flow ($v_c$), pc/h | 118 | | | 101 | | | 470 | | | 509 | | |
| Exiting Flow ($v_{ex}$), pc/h | 425 | | | 509 | | | 118 | | | 79 | | |
| Capacity ($c_{pce}$), pc/h | | 1224 | | | 1245 | | | 854 | | | 821 | |
| Capacity (c), veh/h | | 1188 | | | 1209 | | | 830 | | | 797 | |
| v/c Ratio (x) | | 0.35 | | | 0.42 | | | 0.07 | | | 0.14 | |

## Delay and Level of Service

| Approach | EB | | | WB | | | NB | | | SB | | |
|---|---|---|---|---|---|---|---|---|---|---|---|---|
| Lane | Left | Right | Bypass | Left | Right | Bypass | Left | Right | Bypass | Left | Right | Bypass |
| Lane Control Delay (d), s/veh | | 6.4 | | | 7.3 | | | 5.0 | | | 6.0 | |
| Lane LOS | | A | | | A | | | A | | | A | |
| 95% Queue, veh | | 1.6 | | | 2.1 | | | 0.2 | | | 0.5 | |
| Approach Delay, s/veh \| LOS | 6.4 | A | | 7.3 | A | | 5.0 | A | | 6.0 | A | |
| Intersection Delay, s/veh \| LOS | 6.7 | | | | | | A | | | | | |

Copyright © 2024 University of Florida. All Rights Reserved.

# HCS Roundabouts Report

## General Information

| | |
|---|---|
| Analyst | tob |
| Agency or Co. | Tierra West, LLC |
| Date Performed | 1/7/2024 |
| Analysis Year | 2035 |
| Time Analyzed | PM |
| Project Description | |

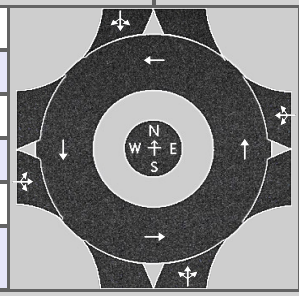


## Site Information

| | |
|---|---|
| Intersection | Beckner Rd. / Driveway "D" |
| E/W Street Name | Beckner Rd. |
| N/S Street Name | Driveway "D" (Calle de Alegr... |
| Analysis Time Period, hrs | 0.25 |
| Peak Hour Factor | 0.92 |
| Jurisdiction | City of Santa Fe |

## Volume Adjustments and Site Characteristics

| Approach | EB | | | | WB | | | | NB | | | | SB | | | |
|---|---|---|---|---|---|---|---|---|---|---|---|---|---|---|---|---|
| Movement | U | L | T | R | U | L | T | R | U | L | T | R | U | L | T | R |
| Number of Lanes (N) | 0 | 0 | 1 | 0 | 0 | 0 | 1 | 0 | 0 | 0 | 1 | 0 | 0 | 0 | 1 | 0 |
| Lane Assignment | | | LTR | | | | LTR | | | | LTR | | | | LTR | |
| Volume (V), veh/h | 0 | 50 | 400 | 50 | 0 | 50 | 450 | 50 | 0 | 30 | 5 | 10 | 0 | 50 | 5 | 50 |
| Percent Heavy Vehicles, % | 3 | 3 | 3 | 3 | 3 | 3 | 3 | 3 | 3 | 3 | 3 | 3 | 3 | 3 | 3 | 3 |
| Flow Rate ($v_{PCE}$), pc/h | 0 | 56 | 448 | 56 | 0 | 56 | 504 | 56 | 0 | 34 | 6 | 11 | 0 | 56 | 6 | 56 |
| Right-Turn Bypass | None | | | | None | | | | None | | | | None | | | |
| Conflicting Lanes | 1 | | | | 1 | | | | 1 | | | | 1 | | | |
| Pedestrians Crossing, p/h | 0 | | | | 0 | | | | 0 | | | | 0 | | | |
| Proportion of CAVs | 0 | | | | | | | | | | | | | | | |

## Critical and Follow-Up Headway Adjustment

| Approach | EB | | | WB | | | NB | | | SB | | |
|---|---|---|---|---|---|---|---|---|---|---|---|---|
| Lane | Left | Right | Bypass | Left | Right | Bypass | Left | Right | Bypass | Left | Right | Bypass |
| Critical Headway, s | | 4.9763 | | | 4.9763 | | | 4.9763 | | | 4.9763 | |
| Follow-Up Headway, s | | 2.6087 | | | 2.6087 | | | 2.6087 | | | 2.6087 | |

## Flow Computations, Capacity and v/c Ratios

| Approach | EB | | | WB | | | NB | | | SB | | |
|---|---|---|---|---|---|---|---|---|---|---|---|---|
| Lane | Left | Right | Bypass | Left | Right | Bypass | Left | Right | Bypass | Left | Right | Bypass |
| Entry Flow ($v_e$), pc/h | | 560 | | | 616 | | | 51 | | | 118 | |
| Entry Volume, veh/h | | 544 | | | 598 | | | 50 | | | 115 | |
| Circulating Flow ($v_c$), pc/h | 118 | | | 96 | | | 560 | | | 594 | | |
| Exiting Flow ($v_{ex}$), pc/h | 515 | | | 594 | | | 118 | | | 118 | | |
| Capacity ($c_{pce}$), pc/h | | 1224 | | | 1251 | | | 779 | | | 753 | |
| Capacity (c), veh/h | | 1188 | | | 1215 | | | 757 | | | 731 | |
| v/c Ratio (x) | | 0.46 | | | 0.49 | | | 0.07 | | | 0.16 | |

## Delay and Level of Service

| Approach | EB | | | WB | | | NB | | | SB | | |
|---|---|---|---|---|---|---|---|---|---|---|---|---|
| Lane | Left | Right | Bypass | Left | Right | Bypass | Left | Right | Bypass | Left | Right | Bypass |
| Lane Control Delay (d), s/veh | | 7.9 | | | 8.3 | | | 5.4 | | | 6.6 | |
| Lane LOS | | A | | | A | | | A | | | A | |
| 95% Queue, veh | | 2.5 | | | 2.8 | | | 0.2 | | | 0.6 | |
| Approach Delay, s/veh \| LOS | 7.9 | A | | 8.3 | A | | 5.4 | A | | 6.6 | A | |
| Intersection Delay, s/veh \| LOS | 7.8 | | | | | | A | | | | | |

Copyright © 2024 University of Florida. All Rights Reserved.

# Data Entry Sheet

## Determination of Warrants for Deceleration Lanes

### NM DOT State Access Management Manual Criteria

### Driveway "A" / Beckner Rd.

**Project Information:**

| | | |
|---|---|---|
| Project Name: | Las Soleras, Tracts 18A & 18B | |
| Project Location: | Beckner Rd. / Walking Rain Rd. | |
| Implemenation Year: | 2025 | |
| Project Environment: | Urban | Two-Lane |

**Street Information:**

| | |
|---|---|
| Major Street Name: | Beckner Rd. |
| Minor Street Name: | Driveway "A" |

**Intersection Information:**

| | Orientation | Prevailing Speed | No. Lanes Each Direction |
|---|---|---|---|
| Driveway "A" | Northbound | 25 | N/A |
| Beckner Rd. | East-West | 45 | 1 |

Determine Case:

Case

1 Urban Two-Lane Highway - Use Table 17.B.1
2 Urban Multi-Lane Highway - Use Table 17.B-2
3 Rural Two Lane Highway - Use Table 17.B-3 and 17.B-5
4 Rural Multi-Lane Highway - Use Table 17.B-4 and 17.B-6

| | |
|---|---|
| Beckner Rd. is Case | 1 |
| Speed Category | 45 to 55 |

| EB Right Turn Volumes | | EB Thru Volumes |
|---|---|---|
| 2025 AM Pk. Hr. NO BUILD | 21 | 272 |
| 2025 AM Pk. Hr. BUILD | 82 | 311 |
| 2025 PM Pk. Hr. NO BUILD | 12 | 254 |
| 2025 PM Pk. Hr. BUILD | 46 | 415 |

| WB Left Turn Volumes | | WB Thru Volumes |
|---|---|---|
| 2025 AM Pk. Hr. NO BUILD | 0 | 309 |
| 2025 AM Pk. Hr. BUILD | 0 | 454 |
| 2025 PM Pk. Hr. NO BUILD | 0 | 335 |
| 2025 PM Pk. Hr. BUILD | 0 | 443 |

**Worksheet Developed by Terry O. Brown, P.E.**

# *Determination of Warrants for Auxiliary Lanes*

**Project Name:** **Las Soleras, Tracts 18A & 18B**
**Name of Highway:** **Beckner Rd.**
**Name of Cross Street:** **Driveway "A"**

**Determination of Warrants for:** Northbound Driveway

**Implementation Year Volumes -** **2025** **Posted Speed Limit:** **45**

***Right Turn Deceleration Lane - Implementation Year Volumes***

| Condition | Year | Projected Right Turn Volume | Warrant Volume in thru Lane | Projected Volume in thru Lane | ✓ if Met | Lane Length (Deceleration)* | Adjustment Factor for Grade** | Lane Length (Storage)*** | Total Lane Length | Taper Ratio |
|---|---|---|---|---|---|---|---|---|---|---|
| AM Peak Hour NO BUILD | **2025** | 21 | 136 | 272 | ✓ | 370 | 1.00 | - | **370** | **12.5:1** |
| AM Peak Hour BUILD | **2025** | 82 | 1 | 311 | ✓ | 370 | 1.00 | - | **370** | **12.5:1** |
| PM Peak Hour NO BUILD | **2025** | 12 | 212 | 254 | ✓ | 370 | 1.00 | - | **370** | **12.5:1** |
| PM Peak Hour BUILD | **2025** | 46 | 1 | 415 | ✓ | 370 | 1.00 | - | **370** | **12.5:1** |

**Based on Table 17.B-1 (Criteria for Deceleration Lanes on Urban Two-Lane Highways)**

***Left Turn Deceleration Lane - Implementation Year Volumes***

| Condition | Year | Projected Left Turn Volume | Warrant Volume in thru Lane | Projected Volume in thru Lane | ✓ if Met | Lane Length (Deceleration)* | Adjustment Factor for Grade** | Lane Length (Storage)*** | Total Lane Length | Taper Ratio |
|---|---|---|---|---|---|---|---|---|---|---|
| AM Peak Hour NO BUILD | **2025** | - | - | 309 | | N/A | | N/A | **N/A** | **N/A** |
| AM Peak Hour BUILD | **2025** | - | - | 454 | | N/A | | N/A | **N/A** | **N/A** |
| PM Peak Hour NO BUILD | **2025** | - | - | 335 | | N/A | | N/A | **N/A** | **N/A** |
| PM Peak Hour BUILD | **2025** | - | - | 443 | | N/A | | N/A | **N/A** | **N/A** |

**Based on Table 17.B-1 (Criteria for Deceleration Lanes on Urban Two-Lane Highways)**

* **Lane Length Requirements based on Table 18.K-1 (Deceleration and Acceleraion Lengths)**

** **Enter Grade Adjustment Factor from Table 18.K-2 or other criteria.**

*** **Lane Storage Length is Based on a calculated 3-minute queue based on average arrival rate per minute.**

= Volume/Hr. divided by 60 times three (rounded) times 25 feet per vehicle.

Lane Storage Length for right turn decel lanes is zero unless there is a stop condition.

**Notes and Comments:**

1. This warrant sheet is for 100% Development of the Project

**Worksheet Developed by Terry O. Brown, P.E.**

**Table 17.B-1**
**Criteria For Deceleration Lanes On**
**URBAN TWO-LANE HIGHWAYS**

| Turning Volume[1] (vph) | LEFT-TURN DECELERATION LANE | | | RIGHT-TURN DECELERATION LANE | | |
|---|---|---|---|---|---|---|
| | Minimum Directional Volume in the Through Lane (vphpl)[2] | | | Minimum Directional Volume in the Through Lane (vphpl)[2] | | |
| | ≤30 mph | 35 to 40 mph | 45 to 55 mph | ≤30 mph | 35 to 40 mph | 45 to 55 mph |
| <5 | **Not Required** | **Not Required** | **Not Required** | **Not Required** | **Not Required** | **Not Required** |
| 5 | **510** | **450** | **330** | **1,080** | **610** | **360** |
| 10 | **390** | **330** | **210** | **700** | **400** | **240** |
| 15 | **320** | **250** | **150** | **500** | **280** | **170** |
| 20 | **270** | **200** | **120** | **380** | **210** | **140** |
| 25 | **230** | **160** | **100** | **300** | **180** | **120** |
| 30 | **200** | **130** | **Required** | **250** | **160** | **110** |
| 35 | **170** | **110** | **Required** | **220** | **150** | **100** |
| 40 | **150** | **Required** | **Required** | **200** | **140** | **Required** |
| 45 | **130** | **Required** | **Required** | **190** | **Required** | **Required** |
| ≥46 | **Required** | **Required** | **Required** | **Required** | **Required** | **Required** |
| | ***Left-turn Deceleratаion Lanes are Required on Urban Two-lane Highways for the following Left-turn Volumes:*** • ≤30 mph : 46 vph or more • 35 to 40 mph : 36 vph or more • 45 to 55 mph : 26 vph or more | | | ***Right-turn Deceleratаion Lanes are Required on Urban Two-lane Highways for the following Right-turn Volumes:*** • ≤30 mph : 46 vph or more • 35 to 40 mph : 41 vph or more • 45 to 55 mph : 36 vph or more | | |

*Notes:*

1. *Use linear interpolation for turning volumes between 5 and 45 vph.*
2. *The directional volume in the through lane includes through vehicles and turning vehicles.*

## Table 18.K-1
## Deceleration and Acceleration Lengths (feet)

| Speed Change Lane Condition | Posted Speed (mph) | | | | | | | | | |
|---|---|---|---|---|---|---|---|---|---|---|
| | 25 | 30 | 35 | 40 | 45 | 50 | 55 | 60 | 65 | 70 |
| **Deceleration Distance** | | | | | | | | | | |
| Stop Condition | 150 | 200 | 250 | 325 | 400 | 475 | 550 | 650 | 725 | 850 |
| Slow to 15 MPH | 130 | 175 | 230 | 300 | 370 | 450 | 525 | 620 | 700 | 820 |
| **Deceleration Taper** | | | | | | | | | | |
| Length for 12-foot Lane | 50 | 75 | 100 | 125 | 150 | 175 | 200 | 225 | 250 | 250 |
| Straight Line Ratios (L:W) | 4:1 | 6:1 | 8:1 | 10.5:1 | 12.5:1 | 14.5:1 | 16.5:1 | 18.5:1 | 21:1 | 21:1 |
| | | | | | | | | | | |
| **Acceleration Lane Length** | N/A | 190 | 270 | 380 | 550 | 760 | 960 | 1,170 | 1,380 | 1,590 |
| **Acceleration Taper** | | | | | | | | | | |
| Length of 12-foot Lane | N/A | 100 | 120 | 150 | 170 | 180 | 230 | 270 | 300 | 300 |
| Straight Line Ratios (L:W) | N/A | 8:1 | 10:1 | 12.5:1 | 14:1 | 15:1 | 19:1 | 22.5:1 | 25:1 | 25:1 |

# LOCATION: RT-14 (CERRILLOS RD) & BECKNER RD — LAST REVISION: 11/21/2023

## PLAN-1 [MORNING PEAK]

BECKNER RD

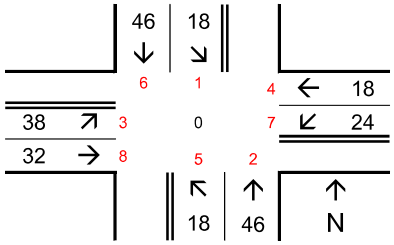


NOTES:

RT-14 (CERRILLOS RD) & BECKNER RD — OFFSET: - 0 SEC [0%]

| PHASE -> | 1 | 2 | 3 | 4 | 5 | 6 | 7 | 8 | TRN | CYC |
|---|---|---|---|---|---|---|---|---|---|---|
| MINIMUM | 15 | 30 | 30 | 15 | 15 | 30 | 20 | 25 | 25% | 90 |
| NOMINAL | 18 | 46 | 38 | 18 | 18 | 46 | 24 | 32 | 53% | 120 |
| MAXIMUM | 25 | 65 | 45 | 25 | 25 | 65 | 30 | 40 | 33% | 160 |
| CONTROL | ACT | CRD | ACT | ACT | ACT | CRD | ACT | ACT | MAX: | 2 |
| SEQUENCE | LEAD | LAG | LEAD | LAG | LEAD | LAG | LEAD | LAG | SEQ: | 1 |

## PLAN-2 [MIDDAY PEAK]

BECKNER RD

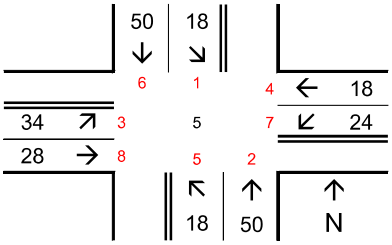


NOTES:

RT-14 (CERRILLOS RD) & BECKNER RD — OFFSET: - 5 SEC [4%]

| PHASE -> | 1 | 2 | 3 | 4 | 5 | 6 | 7 | 8 | TRN | CYC |
|---|---|---|---|---|---|---|---|---|---|---|
| MINIMUM | 15 | 35 | 25 | 15 | 15 | 35 | 20 | 20 | 25% | 90 |
| NOMINAL | 18 | 50 | 34 | 18 | 18 | 50 | 24 | 28 | 57% | 120 |
| MAXIMUM | 25 | 70 | 40 | 25 | 25 | 70 | 30 | 35 | 33% | 160 |
| CONTROL | ACT | HLD | ACT | ACT | ACT | HLD | ACT | ACT | MAX: | 2 |
| SEQUENCE | LEAD | LAG | LEAD | LAG | LEAD | LAG | LEAD | LAG | SEQ: | 1 |

## PLAN-3 [AFTERNOON PEAK]

BECKNER RD

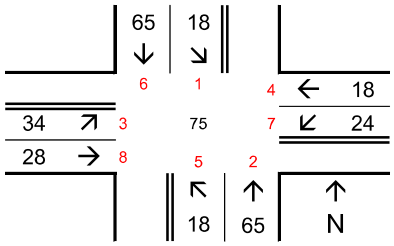


NOTES:

RT-14 (CERRILLOS RD) & BECKNER RD — OFFSET: - 75 SEC [56%]

| PHASE -> | 1 | 2 | 3 | 4 | 5 | 6 | 7 | 8 | TRN | CYC |
|---|---|---|---|---|---|---|---|---|---|---|
| MINIMUM | 15 | 45 | 25 | 15 | 15 | 45 | 20 | 20 | 26% | 100 |
| NOMINAL | 18 | 65 | 34 | 18 | 18 | 65 | 24 | 28 | 61% | 135 |
| MAXIMUM | 25 | 90 | 40 | 25 | 25 | 90 | 30 | 35 | 33% | 180 |
| CONTROL | ACT | CRD | ACT | ACT | ACT | CRD | ACT | ACT | MAX: | 2 |
| SEQUENCE | LEAD | LAG | LEAD | LAG | LEAD | LAG | LEAD | LAG | SEQ: | 1 |

## PLAN-4 [OFF-PEAK]

BECKNER RD

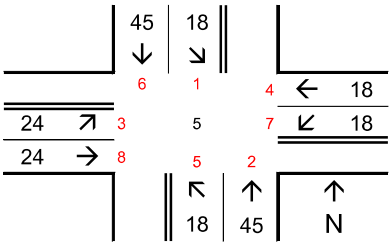


NOTES:

RT-14 (CERRILLOS RD) & BECKNER RD — OFFSET: - 5 SEC [5%]

| PHASE -> | 1 | 2 | 3 | 4 | 5 | 6 | 7 | 8 | TRN | CYC |
|---|---|---|---|---|---|---|---|---|---|---|
| MINIMUM | 15 | 30 | 20 | 15 | 15 | 30 | 15 | 20 | 24% | 80 |
| NOMINAL | 18 | 45 | 24 | 18 | 18 | 45 | 18 | 24 | 60% | 105 |
| MAXIMUM | 25 | 65 | 30 | 25 | 25 | 65 | 25 | 30 | 38% | 145 |
| CONTROL | ACT | CRD | ACT | ACT | ACT | CRD | ACT | ACT | MAX: | 1 |
| SEQUENCE | LEAD | LAG | LEAD | LAG | LEAD | LAG | LEAD | LAG | SEQ: | 1 |

## PLAN-5 [LATE NIGHT]

BECKNER RD

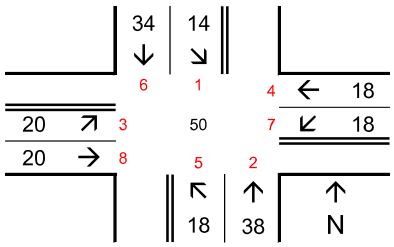


NOTES:

RT-14 (CERRILLOS RD) & BECKNER RD — OFFSET: - 50 SEC [56%]

| PHASE -> | 1 | 2 | 3 | 4 | 5 | 6 | 7 | 8 | TRN | CYC |
|---|---|---|---|---|---|---|---|---|---|---|
| MINIMUM | 10 | 25 | 15 | 15 | 15 | 20 | 15 | 15 | 28% | 65 |
| NOMINAL | 14 | 38 | 20 | 18 | 18 | 34 | 18 | 20 | 58% | 90 |
| MAXIMUM | 20 | 55 | 25 | 25 | 25 | 50 | 25 | 25 | 39% | 125 |
| CONTROL | ACT | CRD | ACT | ACT | ACT | CRD | ACT | ACT | MAX: | 1 |
| SEQUENCE | LEAD | LAG | LEAD | LAG | LEAD | LAG | LEAD | LAG | SEQ: | 1 |

## PLAN-6 [FRIDAY PEAK]

BECKNER RD

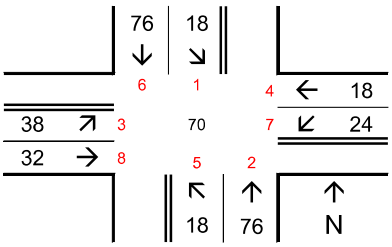


NOTES:

RT-14 (CERRILLOS RD) & BECKNER RD — OFFSET: - 70 SEC [47%]

| PHASE -> | 1 | 2 | 3 | 4 | 5 | 6 | 7 | 8 | TRN | CYC |
|---|---|---|---|---|---|---|---|---|---|---|
| MINIMUM | 15 | 50 | 30 | 15 | 15 | 50 | 20 | 25 | 27% | 110 |
| NOMINAL | 18 | 76 | 38 | 18 | 18 | 76 | 24 | 32 | 63% | 150 |
| MAXIMUM | 25 | 105 | 45 | 25 | 25 | 105 | 30 | 40 | 33% | 200 |
| CONTROL | ACT | CRD | ACT | ACT | ACT | CRD | ACT | ACT | MAX: | 2 |
| SEQUENCE | LEAD | LAG | LEAD | LAG | LEAD | LAG | LEAD | LAG | SEQ: | 1 |

PROGRAM CREATED BY ERIC J. NELSON - ADVANCED TRAFFIC SOLUTIONS, LLC

## NOTES:

# LOCATION: RT-14 (CERRILLOS RD) & WELLNESS WAY LAST REVISION: 11/21/2023

## PLAN-1 [MORNING PEAK]

WELLNESS WAY

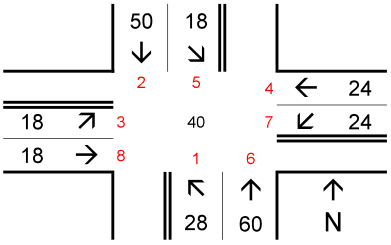


NOTES:

RT-14 (CERRILLOS RD) & WELLNESS WAY OFFSET: - 40 SEC [33%]

| PHASE -> | 1 | 2 | 3 | 4 | 5 | 6 | 7 | 8 | TRN | CYC |
|---|---|---|---|---|---|---|---|---|---|---|
| MINIMUM | 20 | 35 | 15 | 20 | 15 | 40 | 20 | 15 | 25% | 90 |
| NOMINAL | 28 | 50 | 18 | 24 | 18 | 60 | 24 | 18 | 65% | 120 |
| MAXIMUM | 35 | 75 | 25 | 30 | 25 | 85 | 30 | 25 | 38% | 165 |
| CONTROL | ACT | CRD | ACT | ACT | ACT | CRD | ACT | ACT | MAX: | 2 |
| SEQUENCE | LEAD | LAG | LAG | LEAD | LAG | LEAD | LEAD | LAG | SEQ: | 7 |

## PLAN-2 [MIDDAY PEAK]

WELLNESS WAY

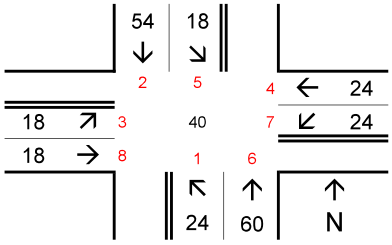


NOTES:

RT-14 (CERRILLOS RD) & WELLNESS WAY OFFSET: - 40 SEC [33%]

| PHASE -> | 1 | 2 | 3 | 4 | 5 | 6 | 7 | 8 | TRN | CYC |
|---|---|---|---|---|---|---|---|---|---|---|
| MINIMUM | 20 | 35 | 15 | 20 | 15 | 40 | 20 | 15 | 25% | 90 |
| NOMINAL | 24 | 54 | 18 | 24 | 18 | 60 | 24 | 18 | 65% | 120 |
| MAXIMUM | 30 | 80 | 25 | 30 | 25 | 85 | 30 | 25 | 38% | 165 |
| CONTROL | ACT | CRD | ACT | ACT | ACT | HLD | ACT | ACT | MAX: | 2 |
| SEQUENCE | LEAD | LAG | LAG | LEAD | LAG | LEAD | LEAD | LAG | SEQ: | 7 |

## PLAN-3 [AFTERNOON PEAK]

WELLNESS WAY

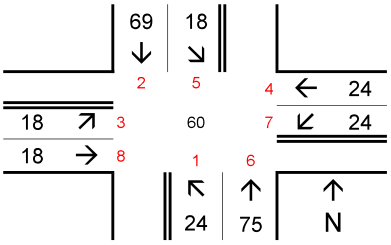


NOTES:

RT-14 (CERRILLOS RD) & WELLNESS WAY OFFSET: - 60 SEC [44%]

| PHASE -> | 1 | 2 | 3 | 4 | 5 | 6 | 7 | 8 | TRN | CYC |
|---|---|---|---|---|---|---|---|---|---|---|
| MINIMUM | 20 | 45 | 15 | 20 | 15 | 50 | 20 | 15 | 26% | 100 |
| NOMINAL | 24 | 69 | 18 | 24 | 18 | 75 | 24 | 18 | 69% | 135 |
| MAXIMUM | 30 | 100 | 25 | 30 | 25 | 105 | 30 | 25 | 37% | 185 |
| CONTROL | ACT | CRD | ACT | ACT | ACT | CRD | ACT | ACT | MAX: | 2 |
| SEQUENCE | LEAD | LAG | LEAD | LAG | LEAD | LAG | LEAD | LAG | SEQ: | 1 |

## PLAN-4 [OFF-PEAK]

WELLNESS WAY

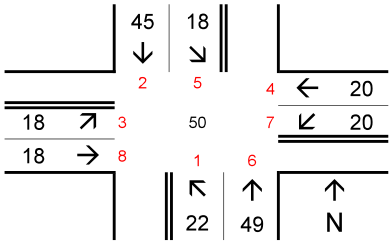


NOTES:

RT-14 (CERRILLOS RD) & WELLNESS WAY OFFSET: - 50 SEC [48%]

| PHASE -> | 1 | 2 | 3 | 4 | 5 | 6 | 7 | 8 | TRN | CYC |
|---|---|---|---|---|---|---|---|---|---|---|
| MINIMUM | 15 | 30 | 15 | 15 | 15 | 30 | 15 | 15 | 29% | 75 |
| NOMINAL | 22 | 46 | 18 | 20 | 18 | 49 | 20 | 18 | 64% | 105 |
| MAXIMUM | 30 | 65 | 25 | 25 | 25 | 70 | 25 | 25 | 38% | 145 |
| CONTROL | ACT | CRD | ACT | ACT | ACT | CRD | ACT | ACT | MAX: | 1 |
| SEQUENCE | LEAD | LAG | LAG | LEAD | LAG | LEAD | LEAD | LAG | SEQ: | 7 |

## PLAN-5 [LATE NIGHT]

WELLNESS WAY

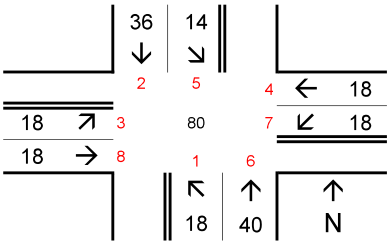


NOTES:

RT-14 (CERRILLOS RD) & WELLNESS WAY OFFSET: - 80 SEC [89%]

| PHASE -> | 1 | 2 | 3 | 4 | 5 | 6 | 7 | 8 | TRN | CYC |
|---|---|---|---|---|---|---|---|---|---|---|
| MINIMUM | 15 | 25 | 15 | 15 | 10 | 30 | 15 | 15 | 22% | 70 |
| NOMINAL | 18 | 36 | 18 | 18 | 14 | 40 | 18 | 18 | 60% | 90 |
| MAXIMUM | 25 | 50 | 25 | 25 | 20 | 55 | 25 | 25 | 39% | 125 |
| CONTROL | ACT | CRD | ACT | ACT | ACT | CRD | ACT | ACT | MAX: | 1 |
| SEQUENCE | LEAD | LAG | LAG | LEAD | LAG | LEAD | LEAD | LAG | SEQ: | 7 |

## PLAN-6 [FRIDAY PEAK]

WELLNESS WAY

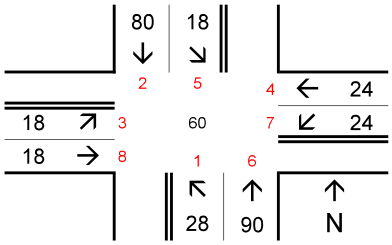


NOTES:

RT-14 (CERRILLOS RD) & WELLNESS WAY OFFSET: - 60 SEC [40%]

| PHASE -> | 1 | 2 | 3 | 4 | 5 | 6 | 7 | 8 | TRN | CYC |
|---|---|---|---|---|---|---|---|---|---|---|
| MINIMUM | 20 | 55 | 15 | 20 | 15 | 60 | 20 | 15 | 27% | 110 |
| NOMINAL | 28 | 80 | 18 | 24 | 18 | 90 | 24 | 18 | 72% | 150 |
| MAXIMUM | 35 | 115 | 25 | 30 | 25 | 125 | 30 | 25 | 37% | 205 |
| CONTROL | ACT | CRD | ACT | ACT | ACT | CRD | ACT | ACT | MAX: | 2 |
| SEQUENCE | LEAD | LAG | LEAD | LAG | LEAD | LAG | LEAD | LAG | SEQ: | 1 |

PROGRAM CREATED BY ERIC J. NELSON - ADVANCED TRAFFIC SOLUTIONS, LLC

## NOTES:

TIERRA WEST, LLC

5571 Midway Park Pl. NE Albuquerque, NM 87109
(505) 858-3100 fax (505) 858-1118 1 (800) 245-3102
tierrawestllc.com

# Traffic Impact Study Scoping Letter

| | |
|---|---|
| **Project Name:** | [2022040.1] - 4200 Beckner Rd. – Santa Fe |
| **Location:** | Beckner Rd. / Walking Rain Rd. – Santa Fe, NM |
| **Project Descr.** | Medical Office / Retail |
| **Date / Time:** | 07/27/2023 – 1:30 PM |
| **Attendees:** | Leroy Pacheco & Phil Gallegos (representing City of Santa Fe), Ronald Rd. Bohannan, Derek Bohannan, Amanda Herrera, and Terry Brown (Tierra West) |

## Scope of Report:

| | |
|---|---|
| **Traffic Data Collection:** | For this Study, collect all new traffic count data. |
| **Peak Hour / Peak15 x 4** | Peak Hour – apply peak hour factor |
| **Demand Volumes?** | No |
| **Traffic Count Data:** | 7:00 AM to 9:00 AM and 4:00 PM to 6:00 PM |
| **Trip Generation:** | ITE Trip Generation, 11th Edition (see attached) |
| **Growth Rates:** | Based on NM DOT AADT data |
| **Minimum Growth Rate:** | 1% - Use 2% |
| **Implementation Year:** | 2025 |
| **Horizon Year:** | 2035 |
| **Trip Distribution:** | Based on Santa Fe MPO Socioeconomic data (2040 data set) regionally inversely proportional to the distance of the subarea from the project. |
| **Other Projects:** | Medical Office Building (Meridian)<br>Havenly Santa Fe (Keystone Homes)<br>Vista de la Sierra<br>Cielo Apartments<br>5407 Beckner / 5201 Beckner<br>Cavan<br>Keystone (all the developments in the Keystone Study) |

### Study Area:

| Intersection | Count? | Control | Comment |
|---|---|---|---|
| Beckner Rd. / Cerrillos Rd. | 7-9 AM / 4-6 PM | Signalized | |
| Wellness Way / Cerrillos Rd. | 7-9 AM / 4-6 PM | Signalized | |
| Beckner Rd. / Wellness Way | 7-9 AM / 4-6 PM | Roundabout | |
| Beckner Rd. / Railrunner Rd. | 7-9 AM / 4-6 PM | Roundabout | |
| Beckner Rd. / Walking Rain Rd. | 7-9 AM / 4-6 PM | Roundabout | |
| Beckner Rd. / Richards Ave. | 7-9 AM / 4-6 PM | Signalized | Temporary Signal |
| | | | |

Analysis Conditions Required:

| | Condition | Yes / No | Year |
|---|---|---|---|
| | Existing Analysis | Yes | 2023 |
| | Implementation Year Analysis (AM/PM) | Yes | 2025 |
| | Horizon Year Analysis (AM/PM) | Yes | 2035 |
| | | | |

Crash Analysis: Crash Analysis for 5-years (update previous)

Report Submittals:

| To: | Hard Copies | Electronic Copy |
|---|---|---|
| City (Leroy Pacheco & Phil Gallegos) | - | Yes |
| | - | |

Comments: Address walking trail along I-25.

**NOTE:** Address Multi-modal issues.

Traffic Signal Timing Sheets Needed?: Yes

| Intersection | Agency |
|---|---|
| Beckner Rd. / Cerrillos Rd. | City of Santa Fe |
| Wellness Way / Cerrillos Rd. | City of Santa Fe |
| Beckner Rd. / Richards Ave. | City of Santa Fe |

Site Plan Received from Developer? Y / **N**

Land Use List Received from Developer? Y / **N**

# Traffic Count Data Sheet

Year Counts Taken: **2022**

E-W Street **Beckner Rd.**
N-S Street: **Cerrillos Rd.**

Speed Limit (Beckner Rd.)= **45** MPH
Speed Limit (Cerrillos Rd.)= **45** MPH

**Signalized**

**5/19/22**

| Begin Time | End Time | Eastbound (Beckner Rd.) | | | Westbound (Beckner Rd.) | | | Northbound (Cerrillos Rd.) | | | Southbound (Cerrillos Rd.) | | |
|---|---|---|---|---|---|---|---|---|---|---|---|---|---|
| | | L | T | R | L | T | R | L | T | R | L | T | R |
| 7:00 AM | 7:15 AM | ~~43~~ | ~~5~~ | ~~12~~ | ~~12~~ | ~~3~~ | ~~8~~ | ~~7~~ | ~~171~~ | ~~28~~ | ~~1~~ | ~~116~~ | ~~18~~ |
| 7:15 AM | 7:30 AM | ~~63~~ | ~~9~~ | ~~15~~ | ~~22~~ | ~~2~~ | ~~4~~ | ~~6~~ | ~~241~~ | ~~20~~ | ~~7~~ | ~~146~~ | ~~24~~ |
| 7:30 AM | 7:45 AM | **81** | **18** | **20** | **21** | **11** | **6** | **11** | **255** | **25** | **3** | **156** | **22** |
| 7:45 AM | 8:00 AM | **73** | **19** | **18** | **20** | **6** | **4** | **24** | **342** | **44** | **3** | **203** | **47** |
| 8:00 AM | 8:15 AM | **62** | **15** | **19** | **12** | **8** | **5** | **23** | **285** | **28** | **9** | **180** | **44** |
| 8:15 AM | 8:30 AM | **80** | **8** | **12** | **20** | **4** | **6** | **11** | **244** | **32** | **8** | **172** | **37** |
| 8:30 AM | 8:45 AM | ~~72~~ | ~~12~~ | ~~12~~ | ~~13~~ | ~~4~~ | ~~11~~ | ~~12~~ | ~~222~~ | ~~24~~ | ~~9~~ | ~~187~~ | ~~34~~ |
| 8:45 AM | 9:00 AM | ~~44~~ | ~~9~~ | ~~14~~ | ~~20~~ | ~~6~~ | ~~10~~ | ~~12~~ | ~~264~~ | ~~21~~ | ~~18~~ | ~~169~~ | ~~33~~ |
| **AM Peak Hour Volumes** | | **296** | **60** | **69** | **73** | **29** | **21** | **69** | **1126** | **129** | **23** | **711** | **150** |

| | | | | | |
|---|---|---|---|---|---|
| AM Peak Hour Factor | *0.89* | *0.81* | **Intersection 0.86** | *0.81* | *0.87* |

| Begin Time | End Time | Eastbound (Beckner Rd.) | | | Westbound (Beckner Rd.) | | | Northbound (Cerrillos Rd.) | | | Southbound (Cerrillos Rd.) | | |
|---|---|---|---|---|---|---|---|---|---|---|---|---|---|
| | | L | T | R | L | T | R | L | T | R | L | T | R |
| 4:00 PM | 4:15 PM | ~~49~~ | ~~7~~ | ~~9~~ | ~~26~~ | ~~10~~ | ~~18~~ | ~~9~~ | ~~195~~ | ~~25~~ | ~~14~~ | ~~272~~ | ~~72~~ |
| 4:15 PM | 4:30 PM | ~~40~~ | ~~3~~ | ~~11~~ | ~~30~~ | ~~10~~ | ~~19~~ | ~~13~~ | ~~236~~ | ~~18~~ | ~~7~~ | ~~271~~ | ~~61~~ |
| 4:30 PM | 4:45 PM | **54** | **4** | **16** | **39** | **4** | **9** | **17** | **218** | **16** | **9** | **316** | **65** |
| 4:45 PM | 5:00 PM | **50** | **3** | **7** | **29** | **4** | **16** | **11** | **247** | **20** | **6** | **256** | **53** |
| 5:00 PM | 5:15 PM | **61** | **6** | **14** | **34** | **10** | **11** | **22** | **228** | **12** | **3** | **324** | **64** |
| 5:15 PM | 5:30 PM | **52** | **4** | **9** | **28** | **8** | **18** | **17** | **246** | **23** | **11** | **298** | **83** |
| 5:30 PM | 5:45 PM | ~~51~~ | ~~4~~ | ~~13~~ | ~~19~~ | ~~4~~ | ~~7~~ | ~~18~~ | ~~225~~ | ~~10~~ | ~~11~~ | ~~327~~ | ~~61~~ |
| 5:45 PM | 6:00 PM | ~~51~~ | ~~4~~ | ~~8~~ | ~~20~~ | ~~6~~ | ~~12~~ | ~~11~~ | ~~164~~ | ~~20~~ | ~~5~~ | ~~261~~ | ~~52~~ |
| **PM Peak Hour Volumes** | | **217** | **17** | **46** | **130** | **26** | **54** | **67** | **939** | **71** | **29** | **1194** | **265** |

| | | | | | |
|---|---|---|---|---|---|
| PM Peak Hour Factor | *0.86* | *0.95* | **Intersection 0.96** | *0.94* | *0.95* |

# Traffic Count Data Sheet

Year Counts Taken: **2022**

E-W Street **Wellness Way**

N-S Street: **Cerrillos Rd.**

Speed Limit (Wellness Way)= **30**

Speed Limit (Cerrillos Rd.)= **45**

**Signalized**

**5/19/22**

| Begin Time | End Time | Eastbound (Wellness Way) | | | Westbound (Wellness Way) | | | Northbound (Cerrillos Rd.) | | | Southbound (Cerrillos Rd.) | | |
|---|---|---|---|---|---|---|---|---|---|---|---|---|---|
| | | L | T | R | L | T | R | L | T | R | L | T | R |
| 7:00 AM | 7:15 AM | ~~9~~ | ~~5~~ | ~~15~~ | ~~19~~ | ~~6~~ | ~~10~~ | ~~28~~ | ~~169~~ | ~~17~~ | ~~2~~ | ~~99~~ | ~~8~~ |
| 7:15 AM | 7:30 AM | ~~6~~ | ~~12~~ | ~~22~~ | ~~22~~ | ~~6~~ | ~~7~~ | ~~51~~ | ~~230~~ | ~~17~~ | ~~6~~ | ~~131~~ | ~~8~~ |
| 7:30 AM | 7:45 AM | ~~19~~ | ~~18~~ | ~~53~~ | ~~18~~ | ~~19~~ | ~~5~~ | ~~58~~ | ~~256~~ | ~~15~~ | ~~8~~ | ~~120~~ | ~~16~~ |
| 7:45 AM | 8:00 AM | **41** | **19** | **56** | **20** | **28** | **10** | **85** | **316** | **23** | **12** | **166** | **19** |
| 8:00 AM | 8:15 AM | **30** | **19** | **36** | **20** | **13** | **7** | **46** | **266** | **25** | **13** | **173** | **11** |
| 8:15 AM | 8:30 AM | **19** | **11** | **37** | **19** | **25** | **9** | **54** | **247** | **25** | **12** | **169** | **18** |
| 8:30 AM | 8:45 AM | **32** | **14** | **29** | **23** | **18** | **11** | **50** | **223** | **20** | **9** | **163** | **14** |
| 8:45 AM | 9:00 AM | ~~28~~ | ~~7~~ | ~~33~~ | ~~32~~ | ~~8~~ | ~~17~~ | ~~40~~ | ~~255~~ | ~~24~~ | ~~11~~ | ~~158~~ | ~~20~~ |
| **AM Peak Hour Volumes** | | **122** | **63** | **158** | **82** | **84** | **37** | **235** | **1052** | **93** | **46** | **671** | **62** |
| Approach Total | | | 343 | | | 203 | | | 1380 | | | 779 | |
| | | | | | | | **Intersection** | | | | | | |
| AM Peak Hour Factor | | | *0.74* | | | *0.88* | **0.85** | | *0.81* | | | *0.98* | |

| Begin Time | End Time | Eastbound (Wellness Way) | | | Westbound (Wellness Way) | | | Northbound (Cerrillos Rd.) | | | Southbound (Cerrillos Rd.) | | |
|---|---|---|---|---|---|---|---|---|---|---|---|---|---|
| | | L | T | R | L | T | R | L | T | R | L | T | R |
| 4:00 PM | 4:15 PM | ~~55~~ | ~~27~~ | ~~67~~ | ~~25~~ | ~~15~~ | ~~18~~ | ~~40~~ | ~~200~~ | ~~11~~ | ~~9~~ | ~~272~~ | ~~14~~ |
| 4:15 PM | 4:30 PM | ~~16~~ | ~~19~~ | ~~57~~ | ~~24~~ | ~~15~~ | ~~23~~ | ~~42~~ | ~~236~~ | ~~15~~ | ~~10~~ | ~~256~~ | ~~12~~ |
| 4:30 PM | 4:45 PM | **33** | **11** | **53** | **24** | **18** | **17** | **40** | **209** | **13** | **7** | **313** | **8** |
| 4:45 PM | 5:00 PM | **14** | **18** | **35** | **27** | **20** | **20** | **67** | **236** | **12** | **7** | **244** | **14** |
| 5:00 PM | 5:15 PM | **16** | **19** | **58** | **33** | **14** | **23** | **46** | **235** | **11** | **8** | **323** | **13** |
| 5:15 PM | 5:30 PM | **21** | **8** | **40** | **40** | **13** | **9** | **54** | **238** | **17** | **4** | **308** | **18** |
| 5:30 PM | 5:45 PM | ~~11~~ | ~~7~~ | ~~48~~ | ~~32~~ | ~~21~~ | ~~14~~ | ~~44~~ | ~~210~~ | ~~15~~ | ~~4~~ | ~~313~~ | ~~7~~ |
| 5:45 PM | 6:00 PM | ~~20~~ | ~~10~~ | ~~47~~ | ~~29~~ | ~~18~~ | ~~16~~ | ~~34~~ | ~~172~~ | ~~15~~ | ~~8~~ | ~~258~~ | ~~18~~ |
| **PM Peak Hour Volumes** | | **84** | **56** | **186** | **124** | **65** | **69** | **207** | **918** | **53** | **26** | **1188** | **53** |
| Approach Total | | | 326 | | | 258 | | | 1178 | | | 1267 | |
| | | | | | | | **Intersection** | | | | | | |
| PM Peak Hour Factor | | | *0.84* | | | *0.92* | **0.95** | | *0.93* | | | *0.92* | |

# Traffic Count Data Sheet

Year Counts Taken: **2022**

E-W Street **Beckner Rd.**

N-S Street: **Richards Ave.**

Speed Limit (Beckner Rd.)= **45** MPH

Speed Limit (Richards Ave.)= **35** MPH

**Signalized**

**5/18/22**

| Begin Time | End Time | Eastbound (Beckner Rd.) | | | Westbound (Beckner Rd.) | | | Northbound (Richards Ave.) | | | Southbound (Richards Ave.) | | |
|---|---|---|---|---|---|---|---|---|---|---|---|---|---|
| | | L | T | R | L | T | R | L | T | R | L | T | R |
| 7:00 AM | 7:15 AM | ~~14~~ | ~~1~~ | ~~3~~ | ~~0~~ | ~~1~~ | ~~1~~ | ~~6~~ | ~~32~~ | ~~0~~ | ~~6~~ | ~~40~~ | ~~12~~ |
| 7:15 AM | 7:30 AM | ~~16~~ | ~~1~~ | ~~14~~ | ~~1~~ | ~~1~~ | ~~11~~ | ~~6~~ | ~~52~~ | ~~2~~ | ~~13~~ | ~~53~~ | ~~7~~ |
| 7:30 AM | 7:45 AM | **20** | **5** | **13** | **2** | **0** | **28** | **14** | **86** | **6** | **29** | **95** | **12** |
| 7:45 AM | 8:00 AM | **26** | **10** | **20** | **2** | **7** | **49** | **16** | **120** | **13** | **45** | **97** | **24** |
| 8:00 AM | 8:15 AM | **9** | **3** | **16** | **1** | **1** | **16** | **9** | **64** | **2** | **16** | **65** | **27** |
| 8:15 AM | 8:30 AM | **10** | **2** | **13** | **1** | **0** | **2** | **11** | **77** | **1** | **0** | **70** | **16** |
| 8:30 AM | 8:45 AM | ~~15~~ | ~~1~~ | ~~13~~ | ~~0~~ | ~~0~~ | ~~3~~ | ~~11~~ | ~~74~~ | ~~0~~ | ~~1~~ | ~~97~~ | ~~18~~ |
| 8:45 AM | 9:00 AM | ~~11~~ | ~~0~~ | ~~20~~ | ~~1~~ | ~~0~~ | ~~1~~ | ~~18~~ | ~~107~~ | ~~0~~ | ~~2~~ | ~~116~~ | ~~15~~ |
| **AM Peak Hour Volumes** | | **65** | **20** | **62** | **6** | **8** | **95** | **50** | **347** | **22** | **90** | **327** | **79** |

| | | | | Intersection | | | |
|---|---|---|---|---|---|---|---|
| AM Peak Hour Factor | *0.66* | | *0.47* | 0.68 | *0.70* | | *0.75* |

| Begin Time | End Time | Eastbound (Beckner Rd.) | | | Westbound (Beckner Rd.) | | | Northbound (Richards Ave.) | | | Southbound (Richards Ave.) | | |
|---|---|---|---|---|---|---|---|---|---|---|---|---|---|
| | | L | T | R | L | T | R | L | T | R | L | T | R |
| 3:45 PM | 4:00 PM | ~~16~~ | ~~1~~ | ~~10~~ | ~~0~~ | ~~0~~ | ~~2~~ | ~~7~~ | ~~67~~ | ~~0~~ | ~~0~~ | ~~59~~ | ~~25~~ |
| 4:00 PM | 4:15 PM | ~~4~~ | ~~1~~ | ~~7~~ | ~~3~~ | ~~8~~ | ~~6~~ | ~~21~~ | ~~89~~ | ~~0~~ | ~~3~~ | ~~72~~ | ~~25~~ |
| 4:15 PM | 4:30 PM | ~~12~~ | ~~0~~ | ~~5~~ | ~~0~~ | ~~0~~ | ~~2~~ | ~~9~~ | ~~88~~ | ~~0~~ | ~~2~~ | ~~90~~ | ~~23~~ |
| 4:30 PM | 4:45 PM | **25** | **0** | **10** | **0** | **0** | **1** | **3** | **94** | **0** | **0** | **89** | **26** |
| 4:45 PM | 5:00 PM | **19** | **0** | **19** | **0** | **0** | **1** | **10** | **79** | **0** | **0** | **88** | **16** |
| 5:00 PM | 5:15 PM | **15** | **0** | **13** | **0** | **0** | **0** | **12** | **72** | **0** | **1** | **97** | **32** |
| 5:15 PM | 5:30 PM | **15** | **3** | **19** | **0** | **2** | **2** | **15** | **73** | **0** | **8** | **76** | **20** |
| 5:30 PM | 5:45 PM | ~~11~~ | ~~1~~ | ~~8~~ | ~~0~~ | ~~3~~ | ~~7~~ | ~~10~~ | ~~44~~ | ~~1~~ | ~~4~~ | ~~84~~ | ~~26~~ |
| **PM Peak Hour Volumes** | | **74** | **3** | **61** | **0** | **2** | **4** | **40** | **318** | **0** | **9** | **350** | **94** |

| | | | | Intersection | | | |
|---|---|---|---|---|---|---|---|
| PM Peak Hour Factor | *0.91* | | *0.38* | 0.96 | *0.92* | | *0.87* |

# Traffic Count Data Sheet

Year Counts Taken: **2022**

E-W Street **Beckner Rd.**

N-S Street: **Wellness Way**

Speed Limit (Beckner Rd.)= **45** MPH

Speed Limit (Wellness Way)= **35** MPH

**Roundabout**

**5/18/22**

| Begin Time | End Time | Eastbound (Beckner Rd.) | | | Westbound (Beckner Rd.) | | | Northbound (Wellness Way) | | | Southbound (Wellness Way) | | |
|---|---|---|---|---|---|---|---|---|---|---|---|---|---|
| | | L | T | R | L | T | R | L | T | R | L | T | R |
| 7:00 AM | 7:15 AM | ~~9~~ | ~~16~~ | ~~0~~ | ~~0~~ | ~~14~~ | ~~8~~ | ~~0~~ | ~~0~~ | ~~0~~ | ~~4~~ | ~~0~~ | ~~4~~ |
| 7:15 AM | 7:30 AM | ~~9~~ | ~~29~~ | ~~0~~ | ~~0~~ | ~~16~~ | ~~9~~ | ~~0~~ | ~~0~~ | ~~0~~ | ~~8~~ | ~~0~~ | ~~2~~ |
| 7:30 AM | 7:45 AM | ~~3~~ | ~~31~~ | ~~0~~ | ~~0~~ | ~~16~~ | ~~12~~ | ~~0~~ | ~~0~~ | ~~0~~ | ~~7~~ | ~~0~~ | ~~0~~ |
| 7:45 AM | 8:00 AM | **3** | **48** | **0** | **0** | **29** | **21** | **0** | **0** | **0** | **17** | **0** | **0** |
| 8:00 AM | 8:15 AM | **5** | **27** | **0** | **0** | **15** | **16** | **0** | **0** | **0** | **11** | **0** | **3** |
| 8:15 AM | 8:30 AM | **4** | **26** | **0** | **0** | **9** | **12** | **0** | **0** | **0** | **7** | **0** | **0** |
| 8:30 AM | 8:45 AM | **14** | **35** | **0** | **0** | **18** | **12** | **0** | **0** | **0** | **8** | **0** | **1** |
| 8:45 AM | 9:00 AM | ~~10~~ | ~~27~~ | ~~0~~ | ~~0~~ | ~~17~~ | ~~16~~ | ~~0~~ | ~~0~~ | ~~0~~ | ~~10~~ | ~~0~~ | ~~5~~ |
| **AM Peak Hour Volumes** | | **26** | **136** | **0** | **0** | **71** | **61** | **0** | **0** | **0** | **43** | **0** | **4** |

| | | | | | | | | | | | | | |
|---|---|---|---|---|---|---|---|---|---|---|---|---|---|
| AM Peak Hour Factor | | | *0.79* | | | *0.66* | **Intersection 0.72** | | *#DIV/0!* | | | *0.69* | |

| Begin Time | End Time | Eastbound (Beckner Rd.) | | | Westbound (Beckner Rd.) | | | Northbound (Wellness Way) | | | Southbound (Wellness Way) | | |
|---|---|---|---|---|---|---|---|---|---|---|---|---|---|
| | | L | T | R | L | T | R | L | T | R | L | T | R |
| 4:00 PM | 4:15 PM | ~~7~~ | ~~6~~ | ~~0~~ | ~~0~~ | ~~20~~ | ~~8~~ | ~~0~~ | ~~0~~ | ~~0~~ | ~~15~~ | ~~0~~ | ~~7~~ |
| 4:15 PM | 4:30 PM | ~~5~~ | ~~4~~ | ~~0~~ | ~~0~~ | ~~27~~ | ~~22~~ | ~~0~~ | ~~0~~ | ~~0~~ | ~~12~~ | ~~0~~ | ~~5~~ |
| 4:30 PM | 4:45 PM | ~~8~~ | ~~8~~ | ~~0~~ | ~~0~~ | ~~24~~ | ~~8~~ | ~~0~~ | ~~0~~ | ~~0~~ | ~~8~~ | ~~0~~ | ~~5~~ |
| 4:45 PM | 5:00 PM | **5** | **16** | **0** | **0** | **23** | **13** | **0** | **0** | **0** | **12** | **0** | **3** |
| 5:00 PM | 5:15 PM | **7** | **19** | **0** | **0** | **20** | **12** | **0** | **0** | **0** | **19** | **0** | **7** |
| 5:15 PM | 5:30 PM | **3** | **12** | **0** | **0** | **25** | **12** | **0** | **0** | **0** | **15** | **0** | **2** |
| 5:30 PM | 5:45 PM | **2** | **19** | **0** | **0** | **18** | **14** | **0** | **0** | **0** | **13** | **0** | **4** |
| 5:45 PM | 6:00 PM | ~~3~~ | ~~14~~ | ~~0~~ | ~~0~~ | ~~8~~ | ~~13~~ | ~~0~~ | ~~0~~ | ~~0~~ | ~~7~~ | ~~0~~ | ~~6~~ |
| **PM Peak Hour Volumes** | | **17** | **66** | **0** | **0** | **86** | **51** | **0** | **0** | **0** | **59** | **0** | **16** |

| | | | | | | | | | | | | | |
|---|---|---|---|---|---|---|---|---|---|---|---|---|---|
| PM Peak Hour Factor | | | *0.80* | | | *0.93* | **Intersection 0.88** | | *#DIV/0!* | | | *0.72* | |

# Traffic Count Data Sheet

Year Counts Taken: **2023**

E-W Street **Beckner Rd.**

N-S Street: **Las Soleras Dr**

Speed Limit (Beckner Rd.)= **45** MPH

Speed Limit (Las Soleras Dr)= **30** MPH

**Roundabout**

**1/5/23**

| Begin Time | End Time | Eastbound (Beckner Rd.) | | | Westbound (Beckner Rd.) | | | Northbound (Las Soleras Dr) | | | Southbound (Las Soleras Dr) | | |
|---|---|---|---|---|---|---|---|---|---|---|---|---|---|
| | | L | T | R | L | T | R | L | T | R | L | T | R |
| 7:00 AM | 7:15 AM | ~~0~~ | ~~1~~ | ~~0~~ | ~~0~~ | ~~12~~ | ~~0~~ | ~~0~~ | ~~0~~ | ~~0~~ | ~~0~~ | ~~0~~ | ~~1~~ |
| 7:15 AM | 7:30 AM | ~~1~~ | ~~3~~ | ~~0~~ | ~~0~~ | ~~9~~ | ~~0~~ | ~~0~~ | ~~0~~ | ~~0~~ | ~~0~~ | ~~0~~ | ~~0~~ |
| 7:30 AM | 7:45 AM | ~~0~~ | ~~12~~ | ~~0~~ | ~~0~~ | ~~17~~ | ~~1~~ | ~~0~~ | ~~0~~ | ~~0~~ | ~~1~~ | ~~0~~ | ~~0~~ |
| 7:45 AM | 8:00 AM | ~~0~~ | ~~14~~ | ~~0~~ | ~~0~~ | ~~25~~ | ~~1~~ | ~~0~~ | ~~0~~ | ~~0~~ | ~~0~~ | ~~0~~ | ~~1~~ |
| 8:00 AM | 8:15 AM | **2** | **24** | **0** | **0** | **27** | **0** | **0** | **0** | **0** | **0** | **0** | **2** |
| 8:15 AM | 8:30 AM | **0** | **27** | **0** | **0** | **18** | **1** | **0** | **0** | **0** | **1** | **0** | **0** |
| 8:30 AM | 8:45 AM | **0** | **36** | **0** | **0** | **26** | **0** | **0** | **0** | **0** | **0** | **0** | **0** |
| 8:45 AM | 9:00 AM | **2** | **23** | **0** | **0** | **27** | **0** | **0** | **0** | **0** | **0** | **0** | **0** |
| **AM Peak Hour Volumes** | | **4** | **110** | **0** | **0** | **98** | **1** | **0** | **0** | **0** | **1** | **0** | **2** |

| | | | | Intersection | | | |
|---|---|---|---|---|---|---|---|
| AM Peak Hour Factor | *0.79* | | *0.92* | 0.87 | *#DIV/0!* | | *0.38* |

| Begin Time | End Time | Eastbound (Beckner Rd.) | | | Westbound (Beckner Rd.) | | | Northbound (Las Soleras Dr) | | | Southbound (Las Soleras Dr) | | |
|---|---|---|---|---|---|---|---|---|---|---|---|---|---|
| | | L | T | R | L | T | R | L | T | R | L | T | R |
| 3:45 PM | 4:00 PM | **2** | **18** | **0** | **0** | **12** | **0** | **0** | **0** | **0** | **1** | **0** | **2** |
| 4:00 PM | 4:15 PM | **1** | **17** | **0** | **0** | **52** | **2** | **0** | **0** | **0** | **2** | **0** | **0** |
| 4:15 PM | 4:30 PM | **1** | **21** | **0** | **0** | **19** | **3** | **0** | **0** | **0** | **2** | **0** | **2** |
| 4:30 PM | 4:45 PM | **3** | **11** | **0** | **0** | **12** | **0** | **0** | **0** | **0** | **2** | **0** | **1** |
| 4:45 PM | 5:00 PM | ~~1~~ | ~~14~~ | ~~0~~ | ~~0~~ | ~~11~~ | ~~2~~ | ~~0~~ | ~~0~~ | ~~0~~ | ~~3~~ | ~~0~~ | ~~1~~ |
| 5:00 PM | 5:15 PM | ~~1~~ | ~~23~~ | ~~0~~ | ~~0~~ | ~~12~~ | ~~2~~ | ~~0~~ | ~~0~~ | ~~0~~ | ~~4~~ | ~~0~~ | ~~1~~ |
| 5:15 PM | 5:30 PM | ~~1~~ | ~~17~~ | ~~0~~ | ~~0~~ | ~~10~~ | ~~3~~ | ~~0~~ | ~~0~~ | ~~0~~ | ~~0~~ | ~~0~~ | ~~0~~ |
| 5:30 PM | 5:45 PM | ~~1~~ | ~~13~~ | ~~0~~ | ~~0~~ | ~~11~~ | ~~1~~ | ~~0~~ | ~~0~~ | ~~0~~ | ~~4~~ | ~~0~~ | ~~0~~ |
| **PM Peak Hour Volumes** | | **7** | **67** | **0** | **0** | **95** | **5** | **0** | **0** | **0** | **7** | **0** | **5** |

| | | | | Intersection | | | |
|---|---|---|---|---|---|---|---|
| PM Peak Hour Factor | *0.84* | | *0.46* | 0.63 | *#DIV/0!* | | *0.75* |

# Traffic Count Data Sheet

Year Counts Taken: **2022**

E-W Street **Beckner Rd.**
N-S Street: **Rail Runner Rd.**

Speed Limit (Beckner Rd.)= **45** MPH
Speed Limit (Rail Runner Rd.)= **35** MPH

**Roundabout** **5/17/22**

| Begin Time | End Time | Eastbound (Beckner Rd.) L | T | R | Westbound (Beckner Rd.) L | T | R | Northbound (Rail Runner Rd.) L | T | R | Southbound (Rail Runner Rd.) L | T | R |
|---|---|---|---|---|---|---|---|---|---|---|---|---|---|
| 7:00 AM | 7:15 AM | ~~2~~ | ~~7~~ | ~~0~~ | ~~0~~ | ~~16~~ | ~~1~~ | ~~0~~ | ~~0~~ | ~~0~~ | ~~2~~ | ~~0~~ | ~~1~~ |
| 7:15 AM | 7:30 AM | ~~2~~ | ~~22~~ | ~~0~~ | ~~0~~ | ~~18~~ | ~~6~~ | ~~0~~ | ~~0~~ | ~~0~~ | ~~3~~ | ~~0~~ | ~~6~~ |
| 7:30 AM | 7:45 AM | ~~3~~ | ~~27~~ | ~~0~~ | ~~0~~ | ~~26~~ | ~~3~~ | ~~0~~ | ~~0~~ | ~~0~~ | ~~3~~ | ~~0~~ | ~~5~~ |
| 7:45 AM | 8:00 AM | **9** | **38** | **0** | **0** | **37** | **3** | **0** | **0** | **0** | **3** | **0** | **15** |
| 8:00 AM | 8:15 AM | **1** | **29** | **0** | **0** | **28** | **9** | **0** | **0** | **0** | **5** | **0** | **3** |
| 8:15 AM | 8:30 AM | **6** | **22** | **0** | **0** | **18** | **5** | **0** | **0** | **0** | **4** | **0** | **6** |
| 8:30 AM | 8:45 AM | **11** | **33** | **0** | **0** | **27** | **7** | **0** | **0** | **0** | **5** | **0** | **5** |
| 8:45 AM | 9:00 AM | ~~5~~ | ~~32~~ | ~~0~~ | ~~0~~ | ~~25~~ | ~~1~~ | ~~0~~ | ~~0~~ | ~~0~~ | ~~1~~ | ~~0~~ | ~~8~~ |
| **AM Peak Hour Volumes** | | **27** | **122** | **0** | **0** | **110** | **24** | **0** | **0** | **0** | **17** | **0** | **29** |

| | | | | | | |
|---|---|---|---|---|---|---|
| AM Peak Hour Factor | *0.79* | *0.84* | **Intersection** 0.78 | *#DIV/0!* | *0.64* |

| Begin Time | End Time | Eastbound (Beckner Rd.) L | T | R | Westbound (Beckner Rd.) L | T | R | Northbound (Rail Runner Rd.) L | T | R | Southbound (Rail Runner Rd.) L | T | R |
|---|---|---|---|---|---|---|---|---|---|---|---|---|---|
| 4:00 PM | 4:15 PM | ~~3~~ | ~~18~~ | ~~0~~ | ~~0~~ | ~~15~~ | ~~3~~ | ~~0~~ | ~~0~~ | ~~0~~ | ~~3~~ | ~~0~~ | ~~5~~ |
| 4:15 PM | 4:30 PM | ~~4~~ | ~~17~~ | ~~0~~ | ~~0~~ | ~~38~~ | ~~3~~ | ~~0~~ | ~~0~~ | ~~0~~ | ~~3~~ | ~~0~~ | ~~6~~ |
| 4:30 PM | 4:45 PM | ~~1~~ | ~~13~~ | ~~0~~ | ~~0~~ | ~~17~~ | ~~9~~ | ~~0~~ | ~~0~~ | ~~0~~ | ~~3~~ | ~~0~~ | ~~8~~ |
| 4:45 PM | 5:00 PM | **7** | **24** | **0** | **0** | **25** | **4** | **0** | **0** | **0** | **2** | **0** | **4** |
| 5:00 PM | 5:15 PM | **4** | **40** | **0** | **0** | **20** | **3** | **0** | **0** | **0** | **8** | **0** | **9** |
| 5:15 PM | 5:30 PM | **2** | **27** | **0** | **0** | **24** | **6** | **0** | **0** | **0** | **7** | **0** | **4** |
| 5:30 PM | 5:45 PM | **4** | **31** | **0** | **0** | **21** | **2** | **0** | **0** | **0** | **4** | **0** | **2** |
| 5:45 PM | 6:00 PM | ~~4~~ | ~~20~~ | ~~0~~ | ~~0~~ | ~~24~~ | ~~3~~ | ~~0~~ | ~~0~~ | ~~0~~ | ~~14~~ | ~~0~~ | ~~1~~ |
| **PM Peak Hour Volumes** | | **17** | **122** | **0** | **0** | **90** | **15** | **0** | **0** | **0** | **21** | **0** | **19** |

| | | | | | | |
|---|---|---|---|---|---|---|
| PM Peak Hour Factor | *0.79* | *0.88* | **Intersection** 0.85 | *#DIV/0!* | *0.59* |

# Traffic Count Data Sheet

Year Counts Taken: **2022**

E-W Street **Beckner Rd.**

N-S Street: **Walking Rain**

Speed Limit (Beckner Rd.)= **45** MPH

Speed Limit (Walking Rain)= **30** MPH

**Roundabout**

**5/18/22**

| Begin Time | End Time | Eastbound (Beckner Rd.) | | | Westbound (Beckner Rd.) | | | Northbound (Walking Rain) | | | Southbound (Walking Rain) | | |
|---|---|---|---|---|---|---|---|---|---|---|---|---|---|
| | | L | T | R | L | T | R | L | T | R | L | T | R |
| 7:00 AM | 7:15 AM | ~~1~~ | ~~6~~ | ~~0~~ | ~~0~~ | ~~13~~ | ~~1~~ | ~~0~~ | ~~0~~ | ~~0~~ | ~~11~~ | ~~0~~ | ~~5~~ |
| 7:15 AM | 7:30 AM | ~~0~~ | ~~26~~ | ~~0~~ | ~~0~~ | ~~16~~ | ~~1~~ | ~~0~~ | ~~0~~ | ~~0~~ | ~~12~~ | ~~0~~ | ~~7~~ |
| 7:30 AM | 7:45 AM | **2** | **21** | **0** | **0** | **29** | **3** | **0** | **0** | **0** | **16** | **0** | **7** |
| 7:45 AM | 8:00 AM | **5** | **18** | **0** | **0** | **28** | **5** | **0** | **0** | **0** | **6** | **0** | **7** |
| 8:00 AM | 8:15 AM | **6** | **22** | **0** | **0** | **17** | **8** | **0** | **0** | **0** | **8** | **0** | **3** |
| 8:15 AM | 8:30 AM | **5** | **16** | **0** | **0** | **26** | **6** | **0** | **0** | **0** | **14** | **0** | **11** |
| 8:30 AM | 8:45 AM | ~~19~~ | ~~14~~ | ~~0~~ | ~~0~~ | ~~17~~ | ~~6~~ | ~~0~~ | ~~0~~ | ~~0~~ | ~~13~~ | ~~0~~ | ~~8~~ |
| 8:45 AM | 9:00 AM | ~~14~~ | ~~17~~ | ~~0~~ | ~~0~~ | ~~16~~ | ~~4~~ | ~~0~~ | ~~0~~ | ~~0~~ | ~~9~~ | ~~0~~ | ~~9~~ |
| **AM Peak Hour Volumes** | | **18** | **77** | **0** | **0** | **100** | **22** | **0** | **0** | **0** | **44** | **0** | **28** |

| | | | | | |
|---|---|---|---|---|---|
| AM Peak Hour Factor | *0.85* | *0.92* | **Intersection 0.93** | *#DIV/0!* | *0.72* |

| Begin Time | End Time | Eastbound (Beckner Rd.) | | | Westbound (Beckner Rd.) | | | Northbound (Walking Rain) | | | Southbound (Walking Rain) | | |
|---|---|---|---|---|---|---|---|---|---|---|---|---|---|
| | | L | T | R | L | T | R | L | T | R | L | T | R |
| 4:00 PM | 4:15 PM | ~~4~~ | ~~18~~ | ~~0~~ | ~~0~~ | ~~17~~ | ~~6~~ | ~~0~~ | ~~0~~ | ~~0~~ | ~~6~~ | ~~0~~ | ~~1~~ |
| 4:15 PM | 4:30 PM | ~~7~~ | ~~12~~ | ~~0~~ | ~~0~~ | ~~36~~ | ~~16~~ | ~~0~~ | ~~0~~ | ~~0~~ | ~~0~~ | ~~0~~ | ~~3~~ |
| 4:30 PM | 4:45 PM | ~~4~~ | ~~12~~ | ~~0~~ | ~~0~~ | ~~26~~ | ~~3~~ | ~~0~~ | ~~0~~ | ~~0~~ | ~~5~~ | ~~0~~ | ~~2~~ |
| 4:45 PM | 5:00 PM | **4** | **23** | **0** | **0** | **24** | **8** | **0** | **0** | **0** | **12** | **0** | **5** |
| 5:00 PM | 5:15 PM | **11** | **34** | **0** | **0** | **17** | **9** | **0** | **0** | **0** | **5** | **0** | **2** |
| 5:15 PM | 5:30 PM | **4** | **28** | **0** | **0** | **29** | **6** | **0** | **0** | **0** | **1** | **0** | **9** |
| 5:30 PM | 5:45 PM | **10** | **27** | **0** | **0** | **21** | **12** | **0** | **0** | **0** | **9** | **0** | **1** |
| 5:45 PM | 6:00 PM | ~~4~~ | ~~14~~ | ~~0~~ | ~~0~~ | ~~21~~ | ~~9~~ | ~~0~~ | ~~0~~ | ~~0~~ | ~~3~~ | ~~0~~ | ~~2~~ |
| **PM Peak Hour Volumes** | | **29** | **112** | **0** | **0** | **91** | **35** | **0** | **0** | **0** | **27** | **0** | **17** |

| | | | | | |
|---|---|---|---|---|---|
| PM Peak Hour Factor | *0.78* | *0.90* | **Intersection 0.97** | *#DIV/0!* | *0.65* |

## CRASHES NEAR THE INTERSECTION OF CERRILLOS ROAD AND BECKNER ROAD, 2016 - 2020

FIGURE 1: CRASHES NEAR THE INTERSECTION OF CERRILLOS ROAD AND BECKNER ROAD, 2016 - 2020

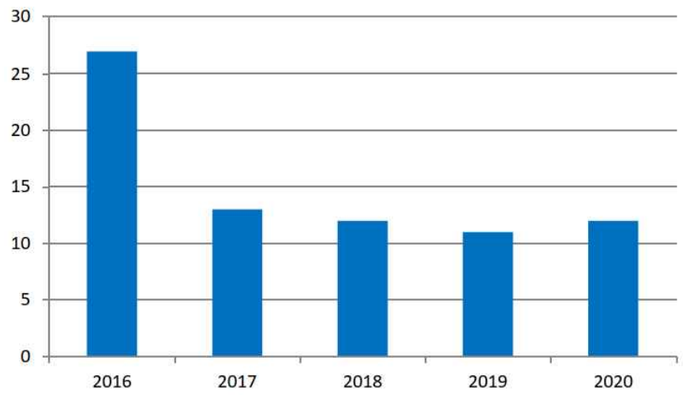


TABLE 2: PEOPLE IN CRASHES NEAR THE INTERSECTION OF CERRILLOS ROAD AND BECKNER ROAD BY SEVERITY OF INJURY, 2016 - 2020

| | FATALITIES | | SUSPECTED SERIOUS INJURIES | | SUSPECTED MINOR INJURIES | | POSSIBLE INJURIES | | NO APPARENT INJURIES | | TOTAL PEOPLE IN CRASHES | |
|---|---|---|---|---|---|---|---|---|---|---|---|---|
| YEAR | COUNT | PERCENT | COUNT | PERCENT | COUNT | PERCENT | COUNT | PERCENT | COUNT | PERCENT | COUNT | PERCENT |
| 2016 | 0 | 0.0% | 0 | 0.0% | 2 | 40.0% | 11 | 5.3% | 68 | 32.9% | 81 | 39.1% |
| 2017 | 0 | 0.0% | 0 | 0.0% | 1 | 20.0% | 4 | 9.5% | 26 | 16.4% | 31 | 15.0% |
| 2018 | 0 | 0.0% | 0 | 0.0% | 0 | 0.0% | 5 | 11.9% | 28 | 17.6% | 33 | 15.9% |
| 2019 | 0 | 0.0% | 0 | 0.0% | 1 | 20.0% | 14 | 33.3% | 16 | 10.1% | 31 | 15.0% |
| 2020 | 0 | 0.0% | 1 | 100.0% | 1 | 20.0% | 8 | 19.0% | 21 | 13.2% | 31 | 15.0% |

TABLE 3: CRASHES NEAR THE INTERSECTION OF CERRILLOS ROAD AND BECKNER ROAD BY CRASH CLASSIFICATION, 2016 - 2020

| CRASH CLASSIFICATION | 2016 | 2017 | 2018 | 2019 | 2020 | 5-YEAR TOTAL |
|---|---|---|---|---|---|---|
| OTHER VEHICLE | 24 | 11 | 11 | 10 | 6 | 62 |
| FIXED OBJECT | 2 | 2 | 1 | 0 | 1 | 6 |
| ANIMAL | 1 | 0 | 0 | 0 | 0 | 1 |
| OVERTURN/ROLLOVER | 0 | 0 | 0 | 1 | 0 | 1 |
| LEFT BLANK | 0 | 0 | 0 | 0 | 5 | 5 |
| GRAND TOTAL | 27 | 13 | 12 | 11 | 12 | 75 |

FIGURE 1: CRASHES NEAR THE INTERSECTION OF CERRILLOS ROAD AND BECKNER ROAD, 2016 - 2020

| | FATAL CRASHES | | INJURY CRASHES | | PROPERTY DAMAGE ONLY CRASHES | | TOTAL CRASHES | |
|---|---|---|---|---|---|---|---|---|
| YEAR | COUNT | PERCENT | COUNT | PERCENT | COUNT | PERCENT | COUNT | PERCENT |
| 2016 | 0 | 0.0% | 7 | 25.0% | 20 | 42.6% | 27 | 36.0% |
| 2017 | 0 | 0.0% | 4 | 14.3% | 9 | 19.1% | 13 | 17.3% |
| 2018 | 0 | 0.0% | 4 | 14.3% | 8 | 17.0% | 12 | 16.0% |
| 2019 | 0 | 0.0% | 7 | 25.0% | 4 | 8.5% | 11 | 14.7% |
| 2020 | 0 | 0.0% | 6 | 21.4% | 6 | 12.8% | 12 | 16.0% |
| GRAND TOTAL | 0 | 0.0% | 28 | 100.0% | 47 | 100.0% | 75 | 100.0% |

NMDOT CRASH DATA

## CRASHES NEAR THE INTERSECTION OF CERRILLOS ROAD AND HERRERA DRIVE AND WELLNESS WAY, 2016 - 2020

FIGURE 1: CRASHES NEAR THE INTERSECTION OF CERRILLOS ROAD AND HERRERA DRIVE AND WELLNESS WAY, 2016 - 2020

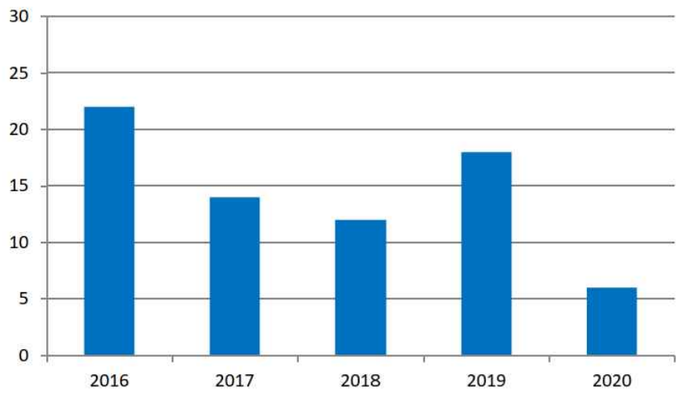


TABLE 2: PEOPLE IN CRASHES NEAR THE INTERSECTION OF CERRILLOS ROAD AND HERRERA DRIVE AND WELLNESS WAY BY SEVERITY OF INJURY, 2016 - 2020

| | FATALITIES | | SUSPECTED SERIOUS INJURIES | | SUSPECTED MINOR INJURIES | | POSSIBLE INJURIES | | NO APPARENT INJURIES | | TOTAL PEOPLE IN CRASHES | |
|---|---|---|---|---|---|---|---|---|---|---|---|---|
| YEAR | COUNT | PERCENT | COUNT | PERCENT | COUNT | PERCENT | COUNT | PERCENT | COUNT | PERCENT | COUNT | PERCENT |
| 2016 | 0 | 0.0% | 0 | 0.0% | 1 | 14.3% | 5 | 17.9% | 53 | 31.2% | 59 | 28.6% |
| 2017 | 0 | 0.0% | 0 | 0.0% | 3 | 42.9% | 3 | 10.7% | 34 | 20.0% | 40 | 19.4% |
| 2018 | 0 | 0.0% | 0 | 0.0% | 2 | 28.6% | 7 | 25.0% | 19 | 11.2% | 28 | 13.6% |
| 2019 | 1 | 100.0% | 0 | 0.0% | 1 | 14.3% | 7 | 25.0% | 45 | 26.5% | 54 | 26.2% |
| 2020 | 0 | 0.0% | 0 | 0.0% | 0 | 0.0% | 6 | 21.4% | 19 | 11.2% | 25 | 12.1% |

TABLE 3: CRASHES NEAR THE INTERSECTION OF CERRILLOS ROAD AND HERRERA DRIVE AND WELLNESS WAY BY CRASH CLASSIFICATION, 2016 - 2020

| CRASH CLASSIFICATION | 2016 | 2017 | 2018 | 2019 | 2020 | 5-YEAR TOTAL |
|---|---|---|---|---|---|---|
| OTHER VEHICLE | 20 | 14 | 11 | 15 | 4 | 64 |
| FIXED OBJECT | 2 | 0 | 1 | 1 | 0 | 4 |
| OTHER (OBJECT) | 0 | 0 | 0 | 1 | 0 | 1 |
| OVERTURN / ROLLOVER | 0 | 0 | 0 | 1 | 0 | 1 |
| LEFT BLANK | 0 | 0 | 0 | 0 | 2 | 2 |
| GRAND TOTAL | 22 | 14 | 12 | 18 | 6 | 72 |

FIGURE 1: CRASHES NEAR THE INTERSECTION OF CERRILLOS ROAD AND HERRERA DRIVE AND WELLNESS WAY, 2016 - 2020

| | FATAL CRASHES | | INJURY CRASHES | | PROPERTY DAMAGE ONLY CRASHES | | TOTAL CRASHES | |
|---|---|---|---|---|---|---|---|---|
| YEAR | COUNT | PERCENT | COUNT | PERCENT | COUNT | PERCENT | COUNT | PERCENT |
| 2016 | 0 | 0.0% | 5 | 20.8% | 17 | 36.2% | 22 | 30.6% |
| 2017 | 0 | 0.0% | 3 | 12.5% | 11 | 23.4% | 14 | 19.4% |
| 2018 | 0 | 0.0% | 6 | 25.0% | 6 | 12.8% | 12 | 16.7% |
| 2019 | 1 | 100.0% | 6 | 25.0% | 11 | 23.4% | 18 | 25.0% |
| 2020 | 0 | 0.0% | 4 | 16.7% | 2 | 4.3% | 6 | 8.3% |
| GRAND TOTAL | 1 | 100.0% | 24 | 100.0% | 47 | 100.0% | 72 | 100.0% |

NMDOT CRASH DATA

CONCEPTUAL
DRAINAGE REPORT

For

# FINAL PLAT
# TRACT 18-B, LAS SOLERAS
# SANTA FE, NEW MEXICO

Prepared by

Tierra West, LLC
5571 Midway Park Place NE
Albuquerque, New Mexico 87109

Prepared for

Meridian Buildings for Life
Dallas, TX

AUGUST 9, 2024




RONALD R BOHANNAN, PE #7868

# TABLE OF CONTENTS


Vicinity Map ..... 1

Location ..... 2

Drainage Basin Designation ..... 2

Existing Drainage Conditions ..... 2

Undeveloped Basin Map ..... 3

Design Criteria ..... 4

Developed Drainage Conditions ..... 4

FIRM Map ..... 5

Developed Basin Map ..... 6

Summary ..... 7

NOA ATLAS 14 ..... 8

Pipe Capacity ..... 12

Pond Calculations ..... 13

AHYMO Input and Output ..... 16

Grading and Drainage Plan ..... MAP POCKET

## LOCATION

A subdivision of Tract 18B is proposed for property located off Beckner Road east of Cerrillos Road, in the Las Soleras master plan area in Santa Fe, New Mexico. It is comprised of approximately 18 acres zoned Commercial. Included with this replat is Tract 18-A which is comprised of 9.817 acres. This report represents conceptual drainage management and conceptual grading plan for approval by the City of Santa Fe, for Preliminary/Final Plat submittal.

## DRAINAGE BASIN DESIGNATION

The drainage basins for proposed conditions are as indicated on the BASIN MAPs included in this report. Under existing conditions, the site is composed of one developed basin (Tract 18-B2) and five undeveloped basins (Tracts 18-A, 18-B1, 18-B3, 18-B4 & 18-B5). Under proposed developed conditions, Basins 18-B1, 18-B3, 18-B4 & 18-B5 will be developed. Tract 18-A is to be developed under a different, future phase with proposed drainage patterns to be determined at the time of development.

## EXISTING DRAINGE CONDITIONS

All basins within the subject site are currently undeveloped with the exception of Basin 18-B2, which was recently developed with a medical office building (MOB) use. Tracts 18-B1 and 18-B3 generally drain southeast to northwest into the adjacent Tract 19 to the west of the subject site. Developed Tract 18-B2 drains to 3 detention ponds within the tract and ultimately outfalls to the west. Runoff from Tracts 18-B1, 18-B2 and 18-B3 is conveyed west, into Tract 19, to the existing intake drainage structure located south of Beckner Road. The structure drains to an existing storm drain main in Beckner Road. The property to the west of the subject site (Tract 19) also drains to this intake structure. Tracts 18-B4, 18-B5 and the western portion of 18-A drain generally from southwest to northeast to a second intake drainage structure located south of Beckner Road and into the storm drain main in Beckner Road. The eastern portion of Tract 18-A drains to a third intake drainage structure located south of Beckner.

The site is bordered by Interstate 25 right of way to the south. Drainage from the majority of the Tracts 18-B2 and 18-B3 fronting portion of the right of way drains to the west, around the subject site and through Tract 19 to the western most Beckner storm drain intake structure noted above. The remaining portion drains to the east, primarily through Tract 19A. These offsite flows drain via surface flows to the second Beckner storm drain inlet structures mentioned above.

Runoff from the existing Beckner Road and the road roundabout drains to the existing storm drain main in the roadway via surface flow and existing curb drop inlets.

## FIRM MAP

The site is not located in a designated flood plain as shown on the attached Flood Hazard Zone Map No. 35049C0507E dated 12/4/2012.

## DESIGN-CRITERIA

The drainage plan presented in this report was prepared in accordance with the City of Santa Fe Terrain and Stormwater Management Ordinances, Section 14-8.2. The hydrological analysis is based on the 100-year frequency, 24-hour duration storm, as Represented in the ordinance with point precipitation frequency data taken from NOAA Atlas 14, Volume 1, Version 5 for Santa Fe 2 Station ID: 29-8085.

The ultimate drainage plan will include detention of the storm water developed runoff in proposed on-site landscaped areas and in storm water detention ponds. The plan complies with the Terrain and Stormwater Management Ordinance requirement for release of peak flow rates not to exceed predevelopment conditions for a storm event up to the one percent change, twenty-four-hour storm event.

## DEVELOPED-DRAINAGE CONDITIONS

The proposed preliminary/final plat includes subdividing existing Tract 18B into 5 tracts. The recent development of the Medical Office Building (MOB) a 95,000 sf, 3-story building with associated parking, drive aisles, landscaping and storm drainage

detention pond is included in Tract 18-B2. Surface runoff in **Tract 18B-2** will be routed through existing landscape swales and open areas as a passive water harvesting measure. Drainage from the south parking field and from approximately one half of the north parking field, along with runoff from the north half of the office building roof will drain via surface flow and storm drains to the Northwest Pond. Drainage from the south half of the office building roof and the landscaped areas to the south and east of the building will drain via surface flow and storm drain to the East Pond. Flows from the East Pond will be detained and routed through a storm drain to the Northwest Pond. Drainage from the east half of the north parking field will drain via surface flow to the Northeast Pond. Flows from the Northeast Pond will be detained and routed through a storm drain to the Northwest Pond. All flows routed through the Northwest Pond will discharge through a water quality structure and into a storm drain that will be placed under the proposed south leg of the roadway roundabout where it will be released to surface flow. The runoff will continue on its historic flow path to the west and into an existing storm drain intake structure which will convey flows to the existing storm drain main in Beckner Road. The peak flow rates from the Northwest Pond outfall and the un-detained runoff from Basing 4 will not exceed predevelopment conditions for a storm event up to the one percent change, twenty-four-hour storm event.

Runoff from **Tract 18-B1** and **Tract 18-B3** will be routed through landscape areas or swales as passive water harvesting measures and then routed via surface flows or storm drains to storm water detention ponds to be constructed within each tract. Each pond will be sized to detain runoff and to ensure the flows leaving each tract will not exceed predevelopment conditions for a storm event up to the one percent change, twenty-four-hour storm event. The outfall of the ponds will release runoff westerly to the existing Beckner Road storm drain inlet structure located within the adjacent Tract 19. The routing of the runoff will be along historic flow paths to the inlet structure.

Similarly, runoff from **Tract 18-B4** and **Tract 18-B5** will be routed through landscape areas or swales as passive water harvesting measures and then routed via surface flows or storm drains to a shared storm water detention pond to be constructed within Tract 18-B4. The pond will be sized to detain runoff and to ensure the flows leaving the pond will not exceed predevelopment conditions for a storm event up to the one percent change, twenty-four-hour storm event for the combined Tract 18-B4 and

Tract 18-B5. The outfall of the ponds will release runoff easterly to the existing Beckner Road storm drain inlet structure located within the adjacent Tract 18A. The routing of the runoff will be along historic flow paths to the inlet structure.

Runoff from Tract **18-A** will continue as it currently drains today under undeveloped conditions, where flows are routed to existing Beckner Road storm drain inlet structures. The proposed developed runoff will be set in the future as the tract is developed, with runoff out falling to the existing Beckner Road storm drain.

## SUMMARY

The proposed grading and drainage plan for the proposed development of a portion of the existing undeveloped Lot 18, Las Soleras property includes runoff conveyed via onsite surface flows and storm drains to onsite storm water detention ponds. The pond will detain the developed flow and release them to historic flow paths at or below predevelopment flow rates.

# Las Soleras Tract 18-B Plat Location Map

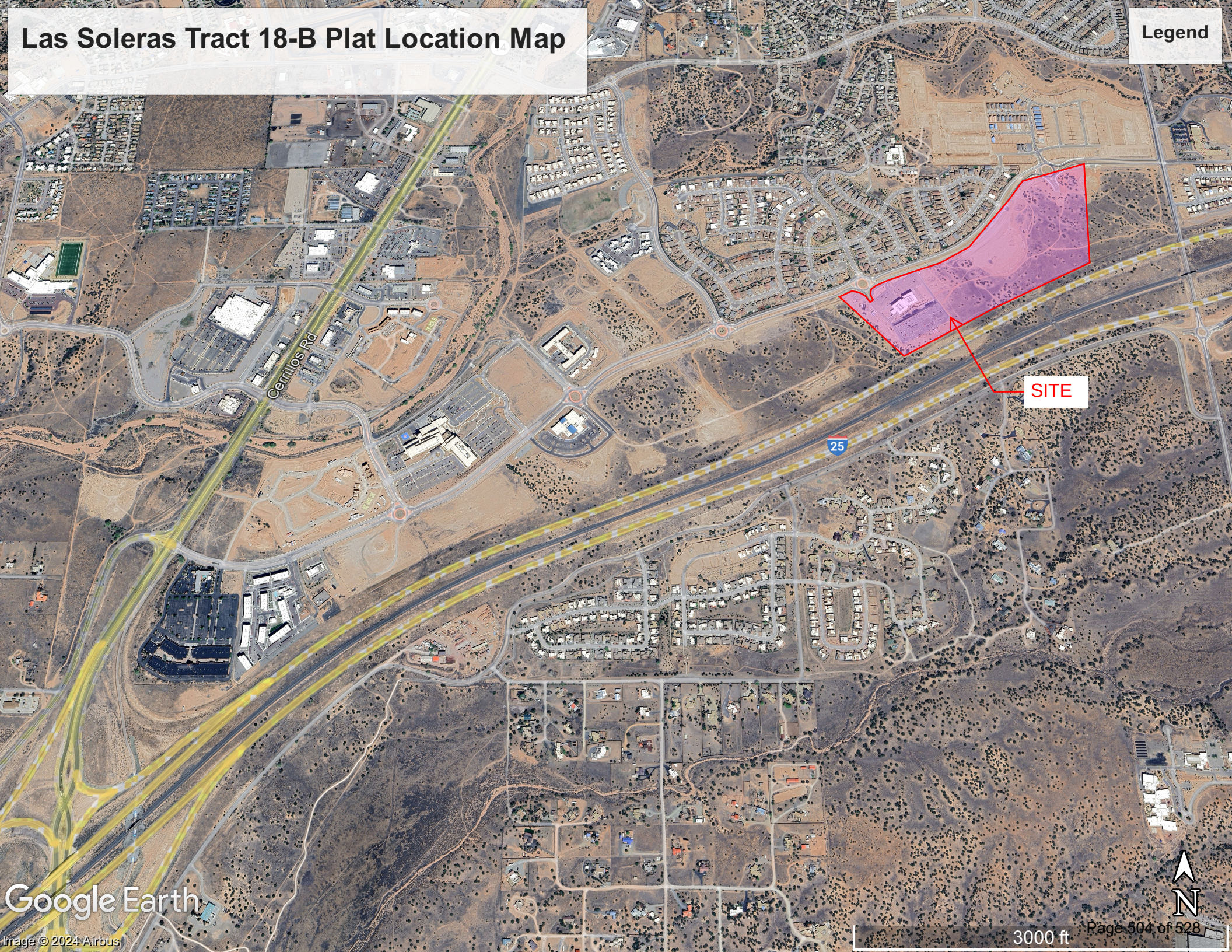

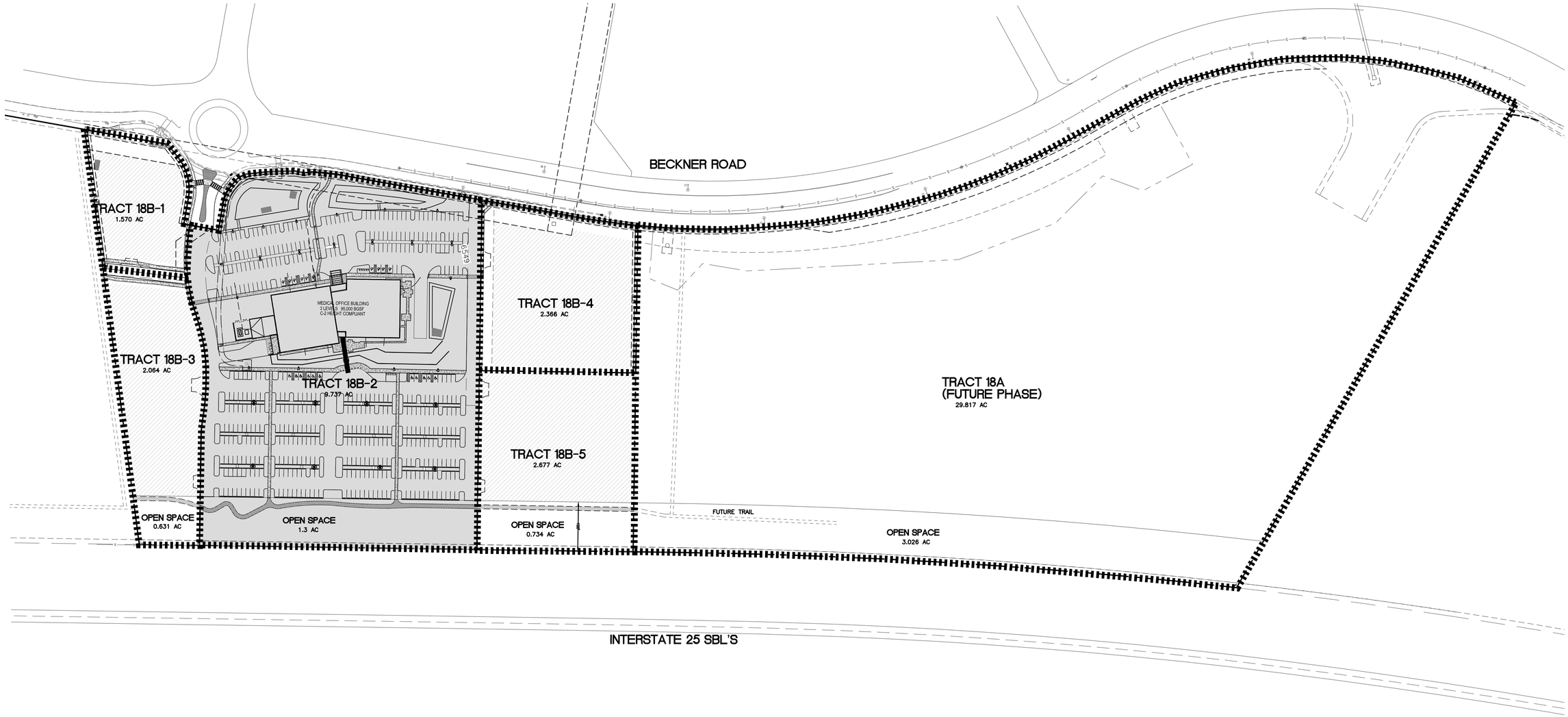


GRAPHIC SCALE

100 0 50 100

( IN FEET )

1 inch = 100 ft.

TRACT 18A & 18B
LAS SOLERAS
CONCEPTUAL
DRAINAGE BASIN EXHIBIT

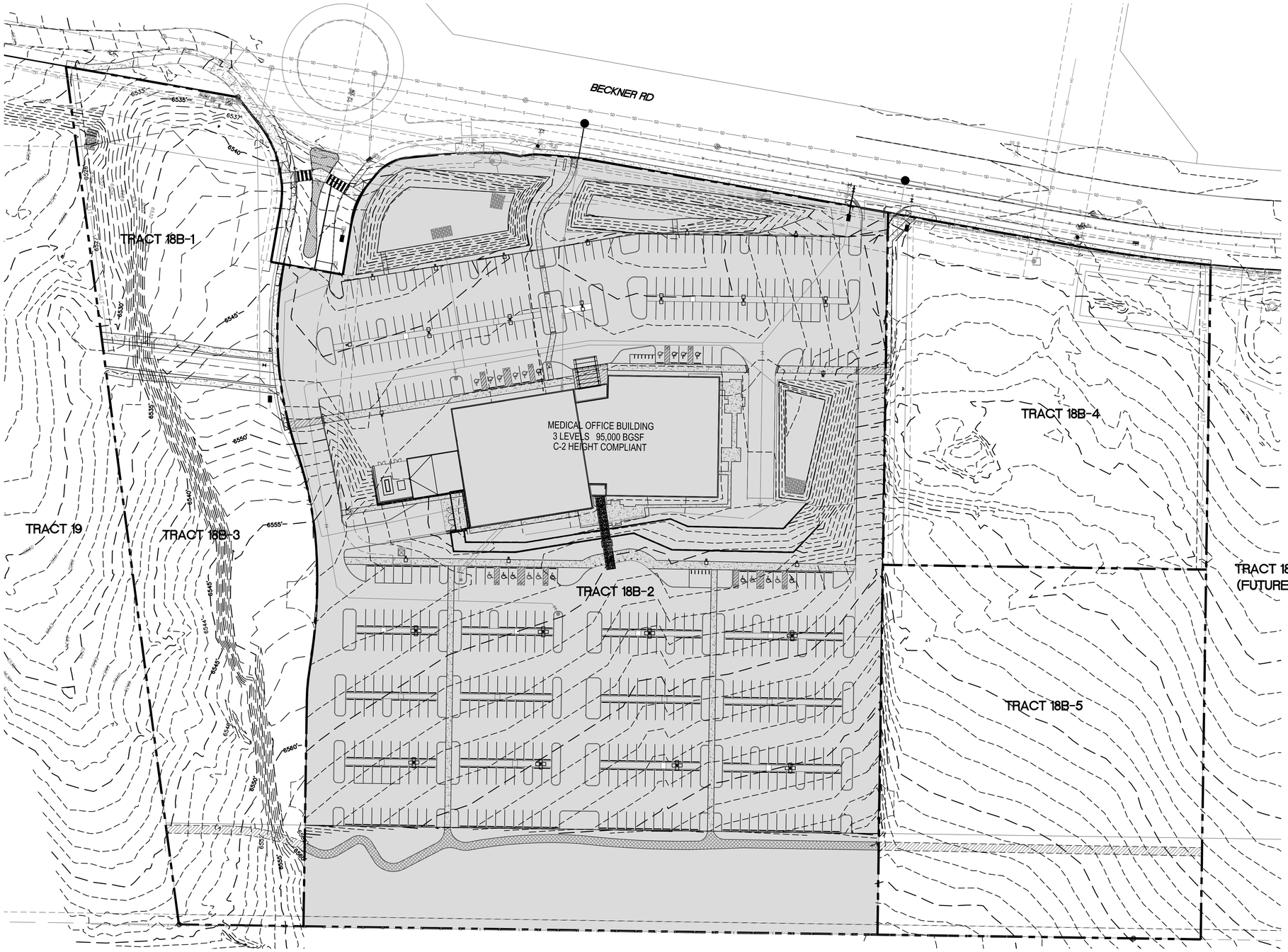


GRAPHIC SCALE

50 0 25 50

( IN FEET )
1 inch = 50 ft.

| | | |
|---|---|---|
| ENGINEER'S SEAL<br>RONALD R. BOHANNAN NEW MEXICO 7868 PROFESSIONAL ENGINEER<br>7-12-24<br>RONALD R. BOHANNAN P.E. #7868 | LAS SOLERAS TRACT 18-B SERIAL SUBDIVISION<br>EXISTING SURVEY<br>TIERRA WEST, LLC<br>5571 MIDWAY PARK PL NE<br>ALBUQUERQUE, NEW MEXICO 87109<br>(505) 858-3100<br>www.tierrawestllc.com | DRAWN BY PM<br>DATE 7-12-24<br>DRAWING 2022040<br>SHEET # 1<br>JOB # 2022040 |

BECKNER RD

TRACT 18B-1
1.570 AC

TRACT 18B-2
9.737 AC

TRACT 18B-3
2.064 AC

TRACT 18B-4
2.366 AC

TRACT 18B-5
2.677 AC

TRACT 18A
29.817 AC

EXISTING DETENTION POND

PROPOSED DETENTION POND

MEDICAL OFFICE BUILDING
3 LEVELS 95,000 BGSF
C-2 HEIGHT COMPLIANT

FF=6549.80

FF=6551.00

FF=6570.50

EXISTING STORM DRAIN INLET STRUCTURE

**NOTE**

FINAL GRADING AND STORM SEWER PROFILES TO BE DETERMINED BY FUTURE DEVELOPMENT PLAN AND PERMIT SETS

GRAPHIC SCALE

50 0 25 50

( IN FEET )
1 inch = 50 ft.

| | | |
|---|---|---|
| ENGINEER'S SEAL<br>RONALD R. BOHANNAN NEW MEXICO 7868 PROFESSIONAL ENGINEER<br>7-12-24<br>RONALD R. BOHANNAN P.E. #7868 | LAS SOLERAS TRACT 18-B SERIAL SUBDIVISION<br>CONCEPTUAL GRADING PLAN<br>TIERRA WEST, LLC<br>5571 MIDWAY PARK PL NE<br>ALBUQUERQUE, NEW MEXICO 87109<br>(505) 858-3100<br>www.tierrawestllc.com | DRAWN BY PM<br>DATE 7-12-24<br>DRAWING 2022040<br>SHEET # 7<br>JOB # 2022040 |

# National Flood Hazard Layer FIRMette

FEMA

106°0'52"W 35°37'25"N




106°0'15"W 35°36'56"N

Feet 1:6,000

0 250 500 1,000 1,500 2,000

*Basemap: USGS National Map: Orthoimagery: Data refreshed October, 2020*

## Legend

SEE FIS REPORT FOR DETAILED LEGEND AND INDEX MAP FOR FIRM PANEL LAYOUT

**SPECIAL FLOOD HAZARD AREAS**
- Without Base Flood Elevation (BFE) *Zone A, V, A99*
- With BFE or Depth *Zone AE, AO, AH, VE, AR*
- Regulatory Floodway

**OTHER AREAS OF FLOOD HAZARD**
- 0.2% Annual Chance Flood Hazard, Areas of 1% annual chance flood with average depth less than one foot or with drainage areas of less than one square mile *Zone X*
- Future Conditions 1% Annual Chance Flood Hazard *Zone X*
- Area with Reduced Flood Risk due to Levee. See Notes. *Zone X*
- Area with Flood Risk due to Levee *Zone D*

**OTHER AREAS**
- NO SCREEN Area of Minimal Flood Hazard *Zone X*
- Effective LOMRs
- Area of Undetermined Flood Hazard *Zone D*

**GENERAL STRUCTURES**
- Channel, Culvert, or Storm Sewer
- Levee, Dike, or Floodwall

**OTHER FEATURES**
- 20.2 Cross Sections with 1% Annual Chance
- 17.5 Water Surface Elevation
- Coastal Transect
- 513 Base Flood Elevation Line (BFE)
- Limit of Study
- Jurisdiction Boundary
- Coastal Transect Baseline
- Profile Baseline
- Hydrographic Feature

**MAP PANELS**
- Digital Data Available
- No Digital Data Available
- Unmapped

N

The pin displayed on the map is an approximate point selected by the user and does not represent an authoritative property location.

This map complies with FEMA's standards for the use of digital flood maps if it is not void as described below. The basemap shown complies with FEMA's basemap accuracy standards

The flood hazard information is derived directly from the authoritative NFHL web services provided by FEMA. This map was exported on 7/14/2022 at 3:18 PM and does not reflect changes or amendments subsequent to this date and time. The NFHL and effective information may change or become superseded by new data over time.

This map image is void if the one or more of the following map elements do not appear: basemap imagery, flood zone labels, legend, scale bar, map creation date, community identifiers, FIRM panel number, and FIRM effective date. Map images for unmapped and unmodernized areas cannot be used for regulatory purposes.

**NOAA Atlas 14, Volume 1, Version 5 SANTA FE 2**
**Station ID: 29-8085**
**Location name: Santa Fe, New Mexico, USA***
**Latitude: 35.6194°, Longitude: -105.9753°**
**Elevation:**
**Elevation (station metadata): 6718 ft****
* source: ESRI Maps
** source: USGS

**POINT PRECIPITATION FREQUENCY ESTIMATES**

Sanja Perica, Sarah Dietz, Sarah Heim, Lillian Hiner, Kazungu Maitaria, Deborah Martin, Sandra Pavlovic, Ishani Roy, Carl Trypaluk, Dale Unruh, Fenglin Yan, Michael Yekta, Tan Zhao, Geoffrey Bonnin, Daniel Brewer, Li-Chuan Chen, Tye Parzybok, John Yarchoan

NOAA, National Weather Service, Silver Spring, Maryland

PF_tabular | PF_graphical | Maps_&_aerials

## PF tabular

**PDS-based point precipitation frequency estimates with 90% confidence intervals (in inches)[1]**

| Duration | Average recurrence interval (years) | | | | | | | | | |
|---|---|---|---|---|---|---|---|---|---|---|
| | 1 | 2 | 5 | 10 | 25 | 50 | 100 | 200 | 500 | 1000 |
| 5-min | **0.196** (0.171-0.223) | **0.254** (0.222-0.290) | **0.337** (0.293-0.384) | **0.400** (0.349-0.456) | **0.488** (0.422-0.552) | **0.554** (0.478-0.629) | **0.625** (0.536-0.708) | **0.696** (0.593-0.791) | **0.795** (0.670-0.901) | **0.871** (0.729-0.988) |
| 10-min | **0.298** (0.260-0.339) | **0.387** (0.338-0.442) | **0.514** (0.446-0.583) | **0.609** (0.531-0.694) | **0.742** (0.643-0.841) | **0.843** (0.727-0.957) | **0.951** (0.815-1.08) | **1.06** (0.902-1.20) | **1.21** (1.02-1.37) | **1.33** (1.11-1.50) |
| 15-min | **0.370** (0.323-0.420) | **0.479** (0.419-0.548) | **0.636** (0.553-0.723) | **0.755** (0.658-0.860) | **0.920** (0.797-1.04) | **1.05** (0.902-1.19) | **1.18** (1.01-1.34) | **1.31** (1.12-1.49) | **1.50** (1.26-1.70) | **1.64** (1.37-1.87) |
| 30-min | **0.498** (0.435-0.566) | **0.645** (0.564-0.738) | **0.857** (0.745-0.974) | **1.02** (0.886-1.16) | **1.24** (1.07-1.40) | **1.41** (1.21-1.60) | **1.59** (1.36-1.80) | **1.77** (1.51-2.01) | **2.02** (1.70-2.29) | **2.21** (1.85-2.51) |
| 60-min | **0.616** (0.538-0.700) | **0.798** (0.698-0.913) | **1.06** (0.922-1.21) | **1.26** (1.10-1.43) | **1.53** (1.33-1.74) | **1.74** (1.50-1.98) | **1.97** (1.68-2.23) | **2.19** (1.86-2.49) | **2.50** (2.11-2.84) | **2.74** (2.29-3.11) |
| 2-hr | **0.741** (0.642-0.853) | **0.940** (0.816-1.09) | **1.24** (1.08-1.43) | **1.47** (1.27-1.69) | **1.80** (1.54-2.06) | **2.05** (1.74-2.34) | **2.32** (1.96-2.64) | **2.60** (2.19-2.96) | **2.98** (2.48-3.40) | **3.29** (2.71-3.75) |
| 3-hr | **0.786** (0.693-0.902) | **0.999** (0.874-1.14) | **1.30** (1.13-1.47) | **1.53** (1.33-1.74) | **1.86** (1.61-2.11) | **2.12** (1.83-2.40) | **2.39** (2.05-2.70) | **2.68** (2.28-3.03) | **3.07** (2.58-3.48) | **3.39** (2.83-3.83) |
| 6-hr | **0.906** (0.804-1.02) | **1.14** (1.01-1.28) | **1.45** (1.27-1.64) | **1.69** (1.48-1.90) | **2.03** (1.77-2.27) | **2.29** (1.98-2.57) | **2.56** (2.21-2.87) | **2.84** (2.43-3.18) | **3.22** (2.73-3.60) | **3.52** (2.95-3.95) |
| 12-hr | **1.04** (0.932-1.18) | **1.31** (1.17-1.48) | **1.64** (1.46-1.85) | **1.90** (1.69-2.14) | **2.26** (2.01-2.55) | **2.53** (2.23-2.85) | **2.82** (2.46-3.17) | **3.10** (2.70-3.50) | **3.48** (3.01-3.92) | **3.78** (3.24-4.26) |
| 24-hr | **1.22** (1.12-1.33) | **1.52** (1.40-1.66) | **1.89** (1.74-2.06) | **2.19** (2.01-2.38) | **2.58** (2.37-2.81) | **2.89** (2.64-3.15) | **3.21** (2.92-3.48) | **3.53** (3.20-3.83) | **3.95** (3.56-4.29) | **4.28** (3.84-4.64) |
| 2-day | **1.38** (1.26-1.51) | **1.72** (1.57-1.89) | **2.14** (1.95-2.34) | **2.47** (2.25-2.70) | **2.91** (2.65-3.18) | **3.25** (2.95-3.55) | **3.60** (3.26-3.92) | **3.95** (3.56-4.31) | **4.41** (3.95-4.81) | **4.77** (4.24-5.22) |
| 3-day | **1.50** (1.37-1.64) | **1.87** (1.70-2.05) | **2.32** (2.11-2.54) | **2.67** (2.43-2.92) | **3.15** (2.86-3.44) | **3.52** (3.18-3.84) | **3.89** (3.52-4.24) | **4.27** (3.84-4.65) | **4.77** (4.26-5.20) | **5.15** (4.58-5.63) |
| 4-day | **1.62** (1.47-1.78) | **2.02** (1.84-2.21) | **2.50** (2.28-2.74) | **2.88** (2.61-3.15) | **3.39** (3.07-3.70) | **3.78** (3.42-4.12) | **4.18** (3.77-4.56) | **4.58** (4.12-5.00) | **5.13** (4.58-5.59) | **5.54** (4.93-6.04) |
| 7-day | **1.89** (1.73-2.06) | **2.35** (2.15-2.56) | **2.89** (2.64-3.15) | **3.30** (3.02-3.59) | **3.86** (3.51-4.20) | **4.28** (3.89-4.65) | **4.70** (4.27-5.10) | **5.12** (4.64-5.57) | **5.67** (5.11-6.19) | **6.09** (5.46-6.64) |
| 10-day | **2.12** (1.95-2.34) | **2.65** (2.43-2.91) | **3.26** (2.99-3.58) | **3.74** (3.43-4.10) | **4.38** (4.00-4.80) | **4.87** (4.44-5.35) | **5.36** (4.88-5.90) | **5.86** (5.31-6.44) | **6.51** (5.87-7.16) | **7.01** (6.30-7.73) |
| 20-day | **2.82** (2.58-3.13) | **3.51** (3.22-3.90) | **4.28** (3.91-4.74) | **4.86** (4.45-5.39) | **5.61** (5.13-6.23) | **6.16** (5.62-6.84) | **6.70** (6.09-7.45) | **7.22** (6.55-8.04) | **7.89** (7.13-8.78) | **8.37** (7.55-9.33) |
| 30-day | **3.46** (3.21-3.74) | **4.30** (3.99-4.65) | **5.20** (4.82-5.62) | **5.87** (5.44-6.34) | **6.71** (6.21-7.25) | **7.32** (6.77-7.92) | **7.92** (7.30-8.57) | **8.48** (7.80-9.18) | **9.17** (8.40-9.96) | **9.68** (8.83-10.5) |
| 45-day | **4.31** (4.04-4.62) | **5.34** (5.00-5.73) | **6.40** (5.98-6.85) | **7.17** (6.70-7.66) | **8.11** (7.58-8.66) | **8.77** (8.19-9.37) | **9.39** (8.75-10.0) | **9.96** (9.28-10.6) | **10.7** (9.90-11.4) | **11.1** (10.3-11.9) |
| 60-day | **4.98** (4.66-5.32) | **6.19** (5.78-6.62) | **7.40** (6.94-7.93) | **8.28** (7.75-8.87) | **9.35** (8.75-10.0) | **10.1** (9.44-10.8) | **10.8** (10.1-11.6) | **11.4** (10.7-12.3) | **12.2** (11.4-13.1) | **12.7** (11.8-13.7) |

[1] Precipitation frequency (PF) estimates in this table are based on frequency analysis of partial duration series (PDS).

Numbers in parenthesis are PF estimates at lower and upper bounds of the 90% confidence interval. The probability that precipitation frequency estimates (for a given duration and average recurrence interval) will be greater than the upper bound (or less than the lower bound) is 5%. Estimates at upper bounds are not checked against probable maximum precipitation (PMP) estimates and may be higher than currently valid PMP values.

Please refer to NOAA Atlas 14 document for more information.

Back to Top

## PF graphical

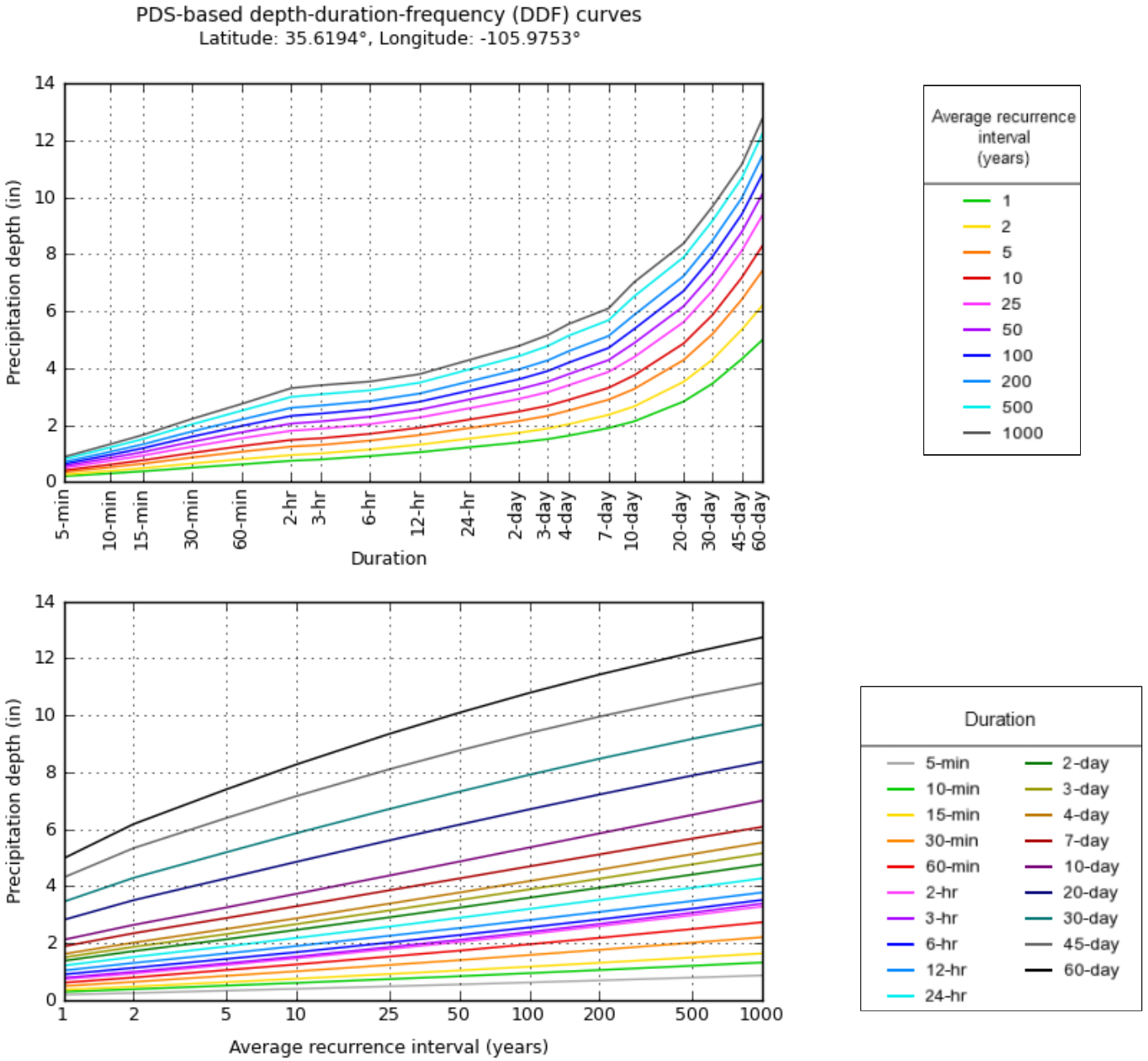


NOAA Atlas 14, Volume 1, Version 5

Created (GMT): Thu Jun 30 21:56:13 2022

Back to Top

## Maps & aerials

**Small scale terrain**

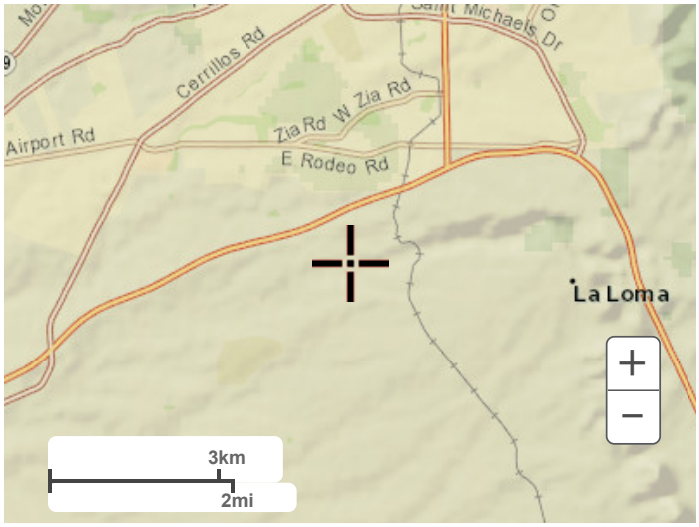


**Large scale terrain**

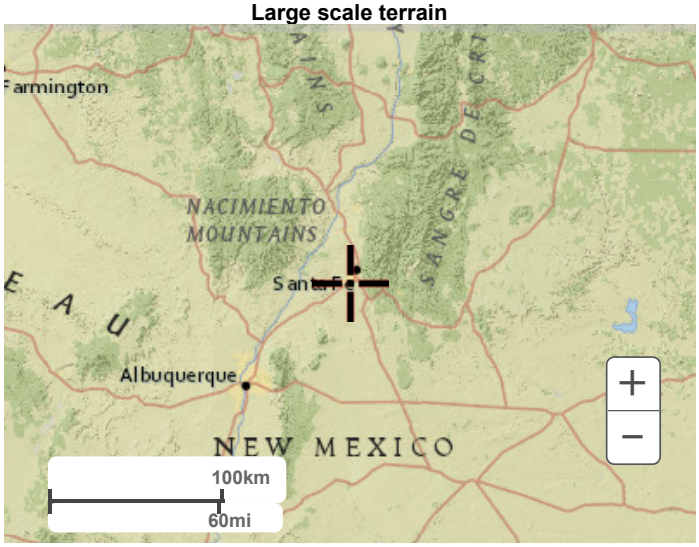


**Large scale map**

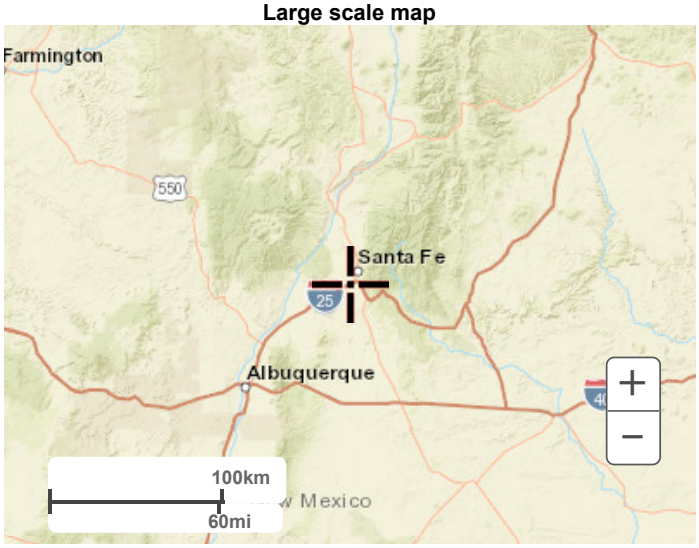


**Large scale aerial**

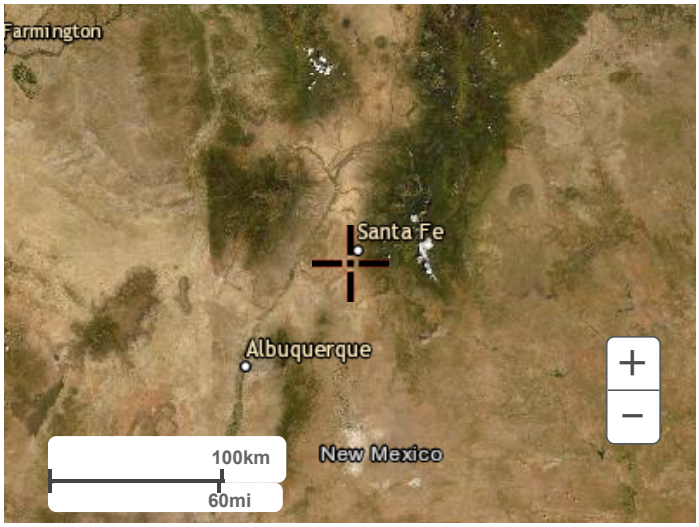


Back to Top

---

US Department of Commerce
National Oceanic and Atmospheric Administration
National Weather Service
National Water Center
1325 East West Highway
Silver Spring, MD 20910
Questions?: HDSC.Questions@noaa.gov

Disclaimer

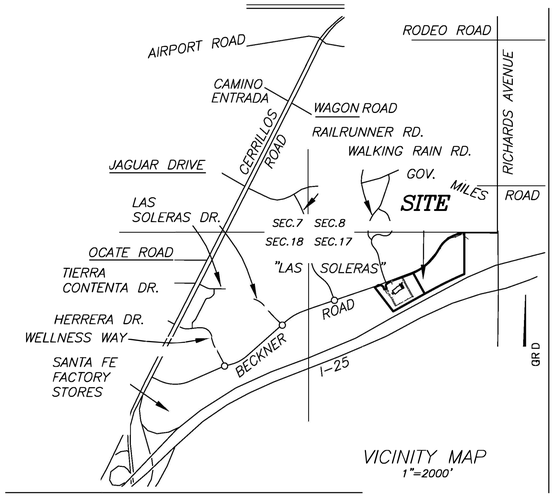


## UTILITY COMPANIES

COMCAST DATE

IN APPROVING THIS PLAT, PUBLIC SERVICE COMPANY OF NEW MEXICO (PNM), NEW MEXICO GAS COMPANY (NMGC) AND QWEST CORPORATION d/b/a CENTURYLINK (QWEST) DID NOT CONDUCT A TITLE SEARCH OF THE PROPERTIES SHOWN HEREON. CONSEQUENTLY, PNM, NMGC AND QWEST DO NOT WAIVE OR RELEASE ANY EASEMENT OR EASEMENT RIGHTS WHICH MAY HAVE BEEN GRANTED BY PRIOR PLAT, REPLAT, OR OTHER DOCUMENT AND WHICH ARE NOT SHOWN ON THIS PLAT.

PNM ELECTRIC SERVICE DATE

NM GAS COMPANY DATE

**CENTURY LINK DISCLAIMER.**

THIS PLAT HAS BEEN APPROVED FOR EASEMENT PURPOSES ONLY THE SIGNING OF THIS PLAT DOES NOT IN ANY WAY GUARANTEE TELEPHONE SERVICE TO THE SUBDIVISION.

QWEST CORPORATION d/b/a CENTURY LINK(QWEST) DATE

## SURVEYORS CERTIFICATE

I HEREBY CERTIFY THAT THIS PLAT IS A TRUE REPRESENTATION OF A SURVEY COMPLETED UNDER MY PERSONAL SUPERVISION ON THE 19TH DAY OF MAY, 2023 TO THE BEST OF MY KNOWLEDGE, THE SURVEY AND PLAT ARE CORRECT, TRUE AND MEET THE MINIMUM STANDARDS FOR LAND SURVEYS IN NEW MEXICO.

DIEGO J. SISNEROS, NMPS#13986, 7/7/2025

SANTA FE COUNTY TREASURER DATE

COUNTY OF SANTA FE )SS
STATE OF NEW MEXICO )
I hereby certify that this instrument was filed for record on the_____day of _____, 202_ A.D. at _____ o'clock ____, and was duly recorded in book ___, page(s) ___ of the records of Santa Fe County.

Witness my Hand and Seal of office
KATHARINE E. CLARK
County Clerk, Santa Fe county, N.M.

Deputy

## DEDICATION AND AFFIDAVIT

KNOW ALL PERSONS BY THESE PRESENTS THAT THE UNDERSIGNED OWNER(S) HAVE CAUSED TO BE SUBDIVIDED THOSE LANDS SHOWN HEREON. THIS SAID REPLAT IS MADE WITH THE FREE CONSENT AND IN ACCORDANCE WITH THE DESIRES OF SAID OWNER(S). THIS REPLAT CONTAINS 47.819 ACRES, MORE OR LESS. THIS LOT SPLIT LIES WITHIN THE PLATTING JURISDICTION OF THE CITY OF SANTA FE, N.M.

PUBLIC UTILITY EASEMENTS SHOWN ON THIS PLAT ARE GRANTED FOR THE COMMON AND JOINT USE OF:
–PUBLIC SERVICE COMPANY OF NEW MEXICO ("PNM"), A NEW MEXICO CORPORATION, (PNM ELECTRIC) FOR INSTALLATION, MAINTENANCE, AND SERVICE OF OVERHEAD AND UNDERGROUND ELECTRICAL LINES, TRANSFORMERS, AND OTHER EQUIPMENT AND RELATED FACILITIES REASONABLY NECESSARY TO PROVIDE ELECTRICAL SERVICES. EASEMENTS FOR ELECTRIC TRANSFORMERS/SWITCHGEARS, AS INSTALLED, SHALL EXTEND TEN (10) FEET IN FRONT OF TRANSFORMERS/SWITCHGEAR DOORS AND FIVE (5) FEET ON EACH SIDE.
–NEW MEXICO GAS COMPANY FOR INSTALLATION, MAINTENANCE, AND SERVICE FOR NATURAL GAS LINES, VALVES AND OTHER EQUIPMENT AND FACILITIES REASONABLY NECESSARY TO PROVIDE NATURAL GAS SERVICES.
–QWEST CORPORATION D/B/A CENTURY LINK QC FOR THE INSTALLATION, MAINTENANCE, AND SERVICE OF SUCH LINES, CABLE, AND OTHER RELATED EQUIPMENT AND FACILITIES REASONABLY NECESSARY TO PROVIDE COMMUNICATION SERVICES.
–COMCAST FOR THE INSTALLATION, MAINTENANCE, AND SERVICE SUCH LINES, CABLE AND OTHER RELATED EQUIPMENT AND FACILITIES REASONABLY NECESSARY TO PROVIDE CABLE SERVICES.

INCLUDED IS THE RIGHT TO BUILD, REBUILD, CONSTRUCT, RECONSTRUCT, LOCATE, RELOCATE WITHIN THE EASEMENT, CHANGE, REMOVE, REPLACE, MODIFY, RENEW, OPERATE AND MAINTAIN FACILITIES FOR PURPOSES DESCRIBED ABOVE, TOGETHER WITH FREE ACCESS TO, FROM, AND OVER SAID EASEMENT, WITH THE RIGHT AND PRIVILEGE OF GOING UPON, OVER AND ACROSS ADJOINING LANDS OF GRANTOR FOR THE PURPOSES SET FORTH HEREIN AND WITH THE RIGHT TO UTILIZE THE RIGHT OF WAY AND EASEMENT TO EXTEND SERVICES TO CUSTOMERS OF GRANTEE, INCLUDING SUFFICIENT WORKING AREA SPACE FOR ELECTRICAL TRANSFORMERS, WITH THE RIGHT AND PRIVILEGE TO TRIM AND REMOVE TREES, SHRUBS OR BUSHES WHICH INTERFERE WITH THE PURPOSES SET FORTH HEREIN. NO BUILDING, SIGN POOL (ABOVEGROUND OR SUBSURFACE), HOT TUB, CONCRETE OR WOOD POOL DECKING, OR OTHER STRUCTURE SHALL BE ERECTED OR CONSTRUCTED ON SAID EASEMENTS, NOR SHALL ANY WELL BE DRILLED OR OPERATED THEREON. PROPERTY OWNERS SHALL BE SOLELY RESPONSIBLE FOR CORRECTING ANY VIOLATIONS OF NATIONAL ELECTRICAL SAFETY CODE BY CONSTRUCTION OF POOLS, DECKING, OR ANY STRUCTURES ADJACENT TO OR NEAR EASEMENTS SHOWN ON THIS PLAT.

PRIVATE ACCESS EASEMENTS, AS SHOWN AS PAE, ARE HEREBY GRANTED FOR USE BY THE OWNERS AND TENANTS OF TRACTS 18B–1 THROUGH 18B–5 AS INDICATED AND SHOWN HEREON FOR INGRESS & EGRESS, INCLUDING BUT NOT LIMITED TO USE BY EMERGENCY TYPE VEHICLES AND THE IMPROVEMENT, REPAIR AND MAINTENANCE OF SAID EASEMENTS. MAINTENANCE OF SAID EASEMENTS SHALL BE THE RESPONSIBILITY OF AN OWNER'S ASSOCIATION PURSUANT TO SEPARATE INSTRUMENTS.

EASEMENTS SHALL BE BINDING UPON THE UNDERSIGNED AND THEIR SUCCESSORS AND ASSIGNS

**STORMWATER AGREEMENT:**

PROPERTY OWNER(S) HEREBY AGREE THAT ALL STORM WATER EASEMENTS AND ANY OTHER DRAINAGE IMPROVEMENTS ON PRIVATE PROPERTY WILL BE MAINTAINED AND KEPT FULLY FUNCTIONAL AS ORIGINALLY DESIGNED AND CONSTRUCTED WITHIN PRIVATE PROPERTY BOUNDARIES BY BECKNER ROAD EQUITIES, INC. LOT OWNERS ASSOCIATION(OWNER) AND SUBSEQUENT HEIRS, ASSIGNS, AND FUTURE OWNERS. THE CITY IS HEREBY GRANTED THE FOLLOWING: (1) ACCESS FOR INSPECTION OF SAID IMPROVEMENTS; (2) IN THE EVENT OF DRAINAGE FACILITY MAINTENANCE DEFICIENCY AND AFTER TEN (10) DAYS WRITTEN NOTICE TO THE RESPECTIVE PROPERTY OWNER, TO ENTER AND RESTORE FULL FUNCTIONAL CAPACITY OF THE DRAINAGE IMPROVEMENTS; AND (3) TO LIEN THE PROPERTY FOR BOTH DIRECT AND INDIRECT COSTS ASSOCIATED WITH SUCH WORK. BY SIGNATURE AFFIXED TO THIS INSTRUMENT, THE PROPERTY OWNER(S) APPROVE AND AGREE THAT THIS AGREEMENT IS BINDING PERPETUALLY, RUNNING WITH THE LAND, ON PRESENT AND FUTURE OWNERS, HEIRS, AND ASSIGNS.

**OWNERS TRACT 18A: LAS SOLERAS VILLAGE LLC, A N.M. LIMITED LIABILITY CO.,**

**GORDON L. SKARSGARD,** MANAGING MEMBER

STATE OF NEW MEXICO )
)SS
COUNTY OF )
THE FOREGOING INSTRUMENT WAS ACKNOWLEDGED AND SUBSCRIBED BEFORE ME BY GORDON L. SKARSGARD, MANAGING MEMBER, LAS SOLERAS VILLAGE LLC, A N.M. LIMITED LIABILITY CO., ON THIS ____ DAY OF _____, 2024

NOTARY PUBLIC COMMISSION EXPIRES

**JUNE GARDNER,** MANAGING MEMBER

STATE OF NEW MEXICO )
)SS
COUNTY OF )
THE FOREGOING INSTRUMENT WAS ACKNOWLEDGED AND SUBSCRIBED BEFORE ME BY JUNE GARDNER, MANAGING MEMBER, LAS SOLERAS VILLAGE LLC, A N.M. LIMITED LIABILITY CO., ON THIS ____ DAY OF _____, 2024

NOTARY PUBLIC COMMISSION EXPIRES

**TRACT 18: LAS SOLERAS CENTER, LLC., A NEW MEXICO LIMITED LIABILITY COMPANY**

BY: **GORDON L. SKARSGARD,** OVERSIGHT MANAGER

STATE OF NEW MEXICO )
)SS
COUNTY OF )
THE FOREGOING INSTRUMENT WAS ACKNOWLEDGED AND SUBSCRIBED BEFORE ME BY GORDON L. SKARSGARD, OVERSIGHT MANAGER OF LAS SOLERAS CENTER, LLC., A NEW MEXICO LIMITED LIABILITY COMPANY, ON THIS ____ DAY OF _____, 2024

NOTARY PUBLIC MY COMMISSION EXPIRES

BY: **RANDALL W. EAKIN,** OVERSIGHT MANAGER

STATE OF NEW MEXICO )
)SS
COUNTY OF )
THE FOREGOING INSTRUMENT WAS ACKNOWLEDGED AND SUBSCRIBED BEFORE ME BY RANDALL W. EAKIN, OVERSIGHT MANAGER OF LAS SOLERAS CENTER, LLC., A NEW MEXICO LIMITED LIABILITY COMPANY, ON THIS ____ DAY OF _____, 2024.

NOTARY PUBLIC COMMISSION EXPIRES

**TRACT 18B: SANTA FE LAS SOLERAS MEDICAL DEVELOPMENT LLC., A DELAWARE LIMITED LIABILITY COMPANY**

[illegible]

BY: **MIKE CONN,** AUTHORIZED SIGNER

STATE OF NEW MEXICO )
)SS
COUNTY )
THE FOREGOING INSTRUMENT WAS ACKNOWLEDGED AND SUBSCRIBED BEFORE ME BY MIKE CONN, AUTHORIZED SIGNER FOR SANTA FE LAS SOLERAS MEDICAL DEVELOPMENT LLC., A DELAWARE LIMITED LIABILITY COMPANY, ON THIS ____ DAY OF _____, 2024

NOTARY PUBLIC MY COMMISSION EXPIRES

**JOHN M. MAHONEY,** MANAGING MEMBER

STATE OF NEW MEXICO )
)SS
COUNTY OF )
THE FOREGOING INSTRUMENT WAS ACKNOWLEDGED AND SUBSCRIBED BEFORE ME BY JOHN M. MAHONEY, MANAGING MEMBER, LAS SOLERAS VILLAGE LLC, A N.M. LIMITED LIABILITY CO., ON THIS ____ DAY OF _____, 2024

NOTARY PUBLIC COMMISSION EXPIRES

**J. HARMON BURTTRAM,** OVERSIGHT MANAGER

STATE OF NEW MEXICO )
)SS
COUNTY OF )
THE FOREGOING INSTRUMENT WAS ACKNOWLEDGED AND SUBSCRIBED BEFORE ME BY J. HARMON BURTTRAM, OVERSIGHT MANAGER, LAS SOLERAS VILLAGE LLC, A N.M. LIMITED LIABILITY CO., ON THIS ____ DAY OF _____, 2024

NOTARY PUBLIC COMMISSION EXPIRES

BY: **J. HARMON BURTTRAM,** OVERSIGHT MANAGER

STATE OF NEW MEXICO )
)SS
COUNTY OF )
THE FOREGOING INSTRUMENT WAS ACKNOWLEDGED AND SUBSCRIBED BEFORE ME BY J. HARMON BURTTRAM, OVERSIGHT MANAGER OF LAS SOLERAS CENTER, LLC., A NEW MEXICO LIMITED LIABILITY COMPANY, ON THIS ____ DAY OF _____, 2024.

NOTARY PUBLIC COMMISSION EXPIRES

BY: **JUNE GARDNER,** OVERSIGHT MANAGER

STATE OF NEW MEXICO )
)SS
COUNTY OF )
THE FOREGOING INSTRUMENT WAS ACKNOWLEDGED AND SUBSCRIBED BEFORE ME BY JUNE GARDNER, OVERSIGHT MANAGER OF LAS SOLERAS CENTER, LLC., A NEW MEXICO LIMITED LIABILITY COMPANY, ON THIS ____ DAY OF _____, 2024.

NOTARY PUBLIC COMMISSION EXPIRES

# FINAL SERIAL SUBDIVISION PLAT
# LAS SOLERAS TRACT 18B
## PREPARED FOR
## SANTA FE LAS SOLERAS MEDICAL DEVELOPMENT LLC,
## A DELAWARE LIMITED LIABILITY COMPANY

LYING WITHIN SECTION 17, T.16N., R.9E., N.M.P.M.
CITY AND COUNTY OF SANTA FE, N.M.

**PURPOSE: TO CREATE 4 ADDITIONAL COMMERCIAL LOTS**

## CITY OF SANTA FE APPROVAL CASE#2024–9585

CITY ENGINEER FOR LAND USE DATE

CITY PLANNER DATE

## CITY OF SANTA FE NOTES AND CONDITIONS

1. PROPERTY DEVELOPMENT IS REQUIRED TO COMPLY WITH APPLICABLE PROVISIONS OF CHAPTER 14. LAND DEVELOPMENT CODE, SFCC 2001 AND SUBSEQUENT AMENDMENTS.

2. PROPERTY DEVELOPMENT IS REQUIRED TO COMPLY WITH THE PROVISIONS OF EACH CITY OF SANTA FE ORDINANCE ADOPTED PRIOR TO PLAT AND OR DEVELOPMENT PLAN RECORDING WITH THE COUNTY CLERK OR SUBMITTAL FOR A BUILDING PERMIT APPLICATION THAT MODIFIES ANY PROVISION OF CHAPTER 14, LAND DEVELOPMENT CODE, SFCC 1987 AND SUBSEQUENT AMENDMENTS.

3. BUILDABLE AREAS FOR PLATTED PARCELS WILL BE DETERMINED AT THE TIME OF BUILDING PERMIT APPLICATION AS DETAILED IN THE LAND DEVELOPMENT CODE.

4. DEVELOPMENT OF TRACT 18 SHALL BE IN COMPLIANCE WITH ALL CONDITIONS OF APPROVAL FOR LAS SOLERAS CASE M–2008–27, M–2008–28, SD 2008–15, AND ZA–2008–11, AS WELL AS WITH THE ANNEXATION AGREEMENT RECORDED ON 3/04/2010.

5. PRIOR TO NEW CONSTRUCTION, PLAT WILL BE SUBMITTED TO FIRE DEPARTMENT FOR COMPLIANCE WITH THE INTERNATIONAL FIRE CODE. ACCESS GREATER THAN 150 FEET LONG MUST PROVIDE AN EASEMENT OF 20 FEET WIDE AND PROVIDE A FIRE TURNAROUND. (MUST COMPLY WITH APPENDIX D OF IFC 2006 EDITION).

6. ALL FIRE DEPARTMENT ACCESS SHALL BE NO GREATER THAN A 10% GRADE THROUGHOUT AND MAINTAIN 20' MINIMUM WIDTH.

7. FIRE DEPARTMENT ACCESS SHALL NOT BE LESS THAN 20 FEET WIDTH TO ANY NEW CONSTRUCTION.

8. FIRE DEPARTMENT SHALL HAVE 150 FEET DISTANCE TO ANY PORTION OF THE BUILDING ON ANY NEW CONSTRUCTION.

9. SHALL HAVE WATER SUPPLY THAT MEETS FIRE FLOW REQUIREMENTS AS PER IFC OR INSTALL AN AUTOMATIC SPRINKLER SYSTEM.

10. EACH LOT SHALL BE SERVED WITH SEPARATE SEWER AND WATER SERVICES.

11. THE PROPERTY AND STRUCTURES SHALL BE CONNECTED TO THE CITY'S PUBLIC SEWER COLLECTION SYSTEM.

12. 100 FOOT PRIVATE OPEN SPACE EASEMENT WITH FLOATING 20' NON MOTORIZED TRAIL EASEMENT TO BE GRANTED TO THE CITY OF SANTA FE. SAID TRAIL TO BE CONSTRUCTED WITH DEVELOPMENT OF LOTS.

13. ANY AND ALL DEVELOPMENT SHALL MEET THE IFC CODE REQUIREMENTS 2009 EDITION OR THE MOST CURRENT EDITION THE GOVERNING BODY HAS ADOPTED AT THE TIME OF PERMITTING.

14. THIS DEVELOPMENT SHALL COMPLY WITH THE FOLLOWING IFC 2009 EDITIONS FOR ACCESS.
. CHAPTER 5
. APPENDIX D

15. ALL APPLICATIONS FOR NONRESIDENTIAL CONSTRUCTION, MULTI-STORY MULTIFAMILY DEVELOPMENT, OR ANY DEVELOPMENT THAT REQUIRES A DEVELOPMENT PLAN, WHICH IS LOCATED ADJACENT TO A HIGHWAY CORRIDOR, SHALL INCLUDE VISUAL IMPACT ANALYSES OF VIEWS FROM I-25 BOTH NORTHBOUND AND SOUTHBOUND USING STORY POLES AND/OR COMPUTER AIDED VISUAL SIMULATION TO ADDRESS ALL PROPOSED IMPROVEMENTS LOCATED WITHIN 265 FEET OF THE I-25 RIGHT-OF-WAY.

## FLOOD ZONE

THIS PROPERTY LIES WITHIN OTHER AREAS "ZONE X", AREAS DETERMINED TO BE OUTSIDE THE 0.2% ANNUAL CHANCE FLOODPLAIN AS SHOWN ON FIRM MAP No. 35049C0507E, EFFECTIVE DECEMBER 4, 2012.

## CASE#2024–9585

"TITLE AND INDEXING INFORMATION FOR COUNTY CLERK"

OWNERS TRACT 18A: LAS SOLERAS VILLAGE LLC & LAS SOLERAS CENTER LLC,
OWNERS TRACT 18B: SANTA FE LAS SOLERAS MEDICAL DEVELOPMENT LLC, A DELAWARE LIMITED LIABILITY COMPANY
PARENT PARCEL: TRACT 18A AND TRACTS 18B,
"LOT SPLIT PLAT PREPARED FOR LAS SOLERAS LLC & LAS SOLERAS CENTER LLC OF TRACT 18 LAS SOLERAS", RECORDED AS INST.#2002919 IN BOOK 898 PAGES 7–8.

TRACT 18A UPC#: 1–050–094–338–410

TRACT 18B UPC#:1–050–094–266–364

PLSS LOCATION: SECTION 17, T16N, R09E, NMPM,

CITY: SANTA FE

COUNTY: SANTA FE

STATE: NEW MEXICO

DAWSON SURVEYS INC.
PROFESSIONAL LAND SURVEYORS
7505 MALLARD WAY, SUITE A
S.F., N.M., 87507 PH505–471–6660
FILE: 10831SS DATE: 1 15, 2025

SHEET 1 OF 2

## REFERENCE DOCUMENTS

1. "LOT SPLIT SURVEY PLAT PREPARED FOR LAS SOLERAS VILLAGE LLC & LAS SOLERAS CENTER LLC OF TRACT 18 LAS SOLERAS.." BY DIEGO J. SISNEROS, NMPS 13986. PLAT RECORDED AS INSTRUMENT NUMBER 2002919 ON THE 12th DAY OF DECEMBER, 2022 IN PLAT BOOK 898 PAGES 7–8, IN THE SANTA FE COUNTY CLERKS OFFICE.

2. EASEMENT SURVEY PLAT PREPARED FOR VDLS LLC, A NEW MEXICO LIMITED LIABILITY COMPANY OF TRACT 17 AND TRACT 18 LAS SOLERAS, PREPARED BY DIEGO J. SISNEROS, NMPLS 13986, RECORDED ON THE 17TH DAY OF AUGUST, 2021 AS INST.#1962900 IN BOOK 881 PAGE 08–09.

3. BECKNER ROAD DEDICATION PLAT PREPARED FOR PRESBYTERIAN HEALTHCARE SERVICES, SPECTRUM ACQUISITION SANTA FE LLC, LAS SOLERAS VILLAGE, LLC; LAS SOLERAS CENTER, LLC AND BECKNER ROAD EQUITIES, INC. BY DIEGO J. SISNEROS, NMPS 13986. PLAT RECORDED AS INSTRUMENT NUMBER 1808503 ON THE 31ST DAY OF OCTOBER, 2016 IN PLAT BOOK 809 PAGES 3–4, IN THE SANTA FE COUNTY CLERKS OFFICE.

ALL OTHER REFERENCE DOCUMENTS AS NOTED HEREON.

## CONTROL SUMMARY

BEARINGS ARE GRID. DISTANCES ARE REFERRED TO 6800' AMSL. TO CONVERT TO NMSPC CENTRAL ZONE GRID DISTANCES, MULTIPLY BY THE COMBINED SCALE FACTOR OF 0.999583883. VERTICAL DATUM IS NAVD88. ALL DATA IS DERIVED FROM CONTROL ESTABLISHED USING THE NMSP NAD83 PROJECTION FROM THE CARLSON SURVCE2 DATA COLLECTION PROGRAM USING RTK BASE STATION "DAWSON2", ESTABLISHED FROM '92 NGS AND SANTA FE COUNTY G.I.S. CONTROL STATIONS: GRID N1687626.87027, GRID E 1708833.475 AND AN ELEVATION OF 6572.376 VIA STATIC OBSERVATION. A BEARING OF S60°50'03"W WAS ESTABLISHED ON THE SOUTH BOUNDARY BETWEEN NMSHD R/W RAILS

## LEGEND

- ● DENOTES #4 REBAR, 13986 OR AS NOTED.
- ○ DENOTES 1/2" REBAR WITH CAP 13986 TO BE SET
- • DENOTES CALCULATED POINT, NOT SET.
- (S) DENOTES STORM SEWER MANHOLE
- DENOTES UTILITY BOX
- DENOTES UTILITY POLE
- DE DENOTES DRAINAGE EASEMENT
- SAS DENOTES SANITARY SEWER
- PUE DENOTES PUBLIC UTILITY EASEMENT
- SE DENOTES SLOPE EASEMENT
- PAE DENOTES PUBLIC ACCESS EASEMENT
- WSE DENOTES PUBLIC WATER AND SEWER EASEMENT
- OH DENOTES OVERHEAD UTILITY LINE
- DENOTES EASEMENT VACATED BY THIS PLAT
- DENOTES BOUNDARY OF LANDS DEALT WITH BY THIS PLAT. INFORMATION OUTSIDE OF THIS BOUNDARY IS BACKGROUND INFORMATION ONLY, NOT VERIFIED FOR ACCURACY AND IS NOT PART OF THIS PLAT.

DETAIL 1"=50'

TRANSFORMER/ SWITCHGEAR EASEMENT, REF.#3

4.5' 16.98' 1.14' 10' PUE, REF.#3 13.35'

TIE S88°38'14"W 18.30' TO #4 REBAR 13986

RIGHT OF WAY REFER TO PLAT 823/37–39

TIE N89°48'35"W 364.91' TO #5 REBAR 9750

#4 REBAR 13986

98' R/W

N66°59'19"E 189.25'

BECKNER ROAD
100' DEDICATED R/W PLAT 804/9–10

38'SLE, REF.#3 L:186.89'

8.73'

20'DE, REF.#3

C14

20'DE REF.#3 3.93' 48.42' N89°51'18"W

SLE, REF.#3 N47°09'02"E 152.29'

PUBLIC ACCESS EASEMENT PLAT REF.#2

10' PUE RESERVATION REF.#2

L:304.46' S24°33'06"E 52.24' L:15.20' 20'DE REF.#3

DETAIL 1"=50'

| LINE | BEARING | DIST. |
|---|---|---|
| L1 | N19°55'24"W | 53.23' |
| L2 | N70°04'36"E | 12.87' |
| L3 | N20°58'07"W | 10.27' |
| L4 | S70°04'36"W | 59.68' |
| L5 | S20°32'01"E | 49.22' |
| L6 | S08°51'27"W | 16.53' |
| L7 | S70°18'02"W | 17.92' |
| L8 | S52°31'39"W | 13.10' |
| L9 | S32°55'23"E | 11.97' |
| L10 | S41°36'05"E | 44.93' |
| L11 | S29°31'21"E | 31.37' |
| L12 | S28°56'41"E | 32.01' |
| L13 | S70°04'36"W | 57.93' |

TRACT 17
LAS SOLERAS
PLAT 714/14–26

20'DE, REF.#3

N69°00'26"E 114.95'

N46°44'05"E 80.37'

N31°41'47"E 8.66

N31°44'20"E 146.71

S59°18'09"E 33.32

50' R/W LA PUERTA PLAT 823/37–39

BECKNER ROAD
98' DEDICATED R/W PLAT 809/3–4
N39°02'27"E 67.38'

10' PUE, REF.#3

98' R/W

ESTANCIAS DE LAS SOLERAS
UNIT 2A
PLAT 823/37–39

| CURVE | RADIUS | DELTA | ARC | CHORD | BEARING |
|---|---|---|---|---|---|
| C1 | 363.89' | 14°23'32" | 91.41' | 91.17' | N27°58'26"W |
| C2 | 105.00' | 48°16'26" | 88.47' | 85.87' | N44°03'37"W |
| C3 | 200.88' | 8°50'56" | 31.02' | 30.99' | S24°44'02"E |
| C4 | 531.31' | 11°36'40" | 107.67' | 107.49' | N26°12'27"W |
| C5 | 368.12' | 16°50'15" | 108.47' | 108.08' | N40°25'55"W |
| C6 | 363.89' | 13°40'50" | 86.89' | 86.68' | S42°00'37"E |
| C7 | 65.00' | 35°54'20" | 40.73' | 40.07' | S09°05'44"E |
| C8 | 45.00' | 44°01'17" | 34.57' | 33.73' | S30°52'05"W |
| C9 | 663.00' | 8°14'54" | 95.45' | 95.36' | S57°00'10"W |
| C10 | 476.02' | 8°02'02" | 66.75' | 66.69' | S66°03'35"W |
| C11 | 1548.99' | 4°28'32" | 121.00' | 120.97' | S67°50'20"W |
| C12 | 1809.16' | 5°35'01" | 1131.31' | 1130.87' | S63°37'45"W |
| C13 | 1549.00' | 35°33'17" | 961.23' | 945.88' | N47°49'25"E |
| C14 | 851.00' | 57°11'38" | 849.49' | 814.65' | N58°38'36"E |
| C15 | 112.97' | 8°50'12" | 17.42' | 17.41' | S17°30'18"E |
| C16 | 287.56' | 13°23'53" | 67.24' | 67.09' | S19°47'59"E |
| C17 | 304.65' | 4°54'18" | 26.08' | 26.07' | S34°53'30"E |
| C18 | 304.65' | 4°15'26" | 22.64' | 22.63' | S39°28'22"E |
| C19 | 557.31' | 9°35'18" | 93.26' | 93.15' | N36°48'26"W |
| C20 | 557.31' | 2°21'26" | 22.93' | 22.93' | N30°50'04"W |
| C21 | 557.31' | 2°40'25" | 26.01' | 26.00' | N28°19'09"W |
| C22 | 557.31' | 6°34'57" | 64.03' | 63.99' | N23°41'28"W |
| C23 | 178.78' | 8°39'42" | 27.03' | 27.00' | S24°43'50"E |
| C24 | 28.00' | 26°04'47" | 12.75' | 12.64' | N42°27'44"W |
| C25 | 28.00' | 31°51'11" | 15.57' | 15.37' | S00°21'35"E |
| C26 | 28.00' | 92°13'18" | 45.07' | 40.36' | S75°16'24"E |
| C27 | 28.00' | 93°19'47" | 45.61' | 40.73' | N17°30'09"E |

50' PNM TRANSMISSION EASEMENT, INST.#1802604 & INST.# 1802605

50'PNM TRANSMISSION EASEMENT, PLAT 7994/7–13 OH

PORTION OF SLE, PLAT 809/3–4 WITHIN TRACT 18B–4 IS HEREBY VACATED PURSUANT TO SAID PLAT

10'PUE, PLAT 809/3–4

C13

Δ:37°45'57" R:1414.26 A:932.19 CH:S48°05'09"W 915.40

TEMPORARY DRAINAGE EASEMENT REF.#1 SUBJECT TO RELOCATION AT TIME OF DEVELOPMENT

15' DE, REF. #2 CONFIGURATION SUBJECT TO FINAL DESIGN

20' DE, REF.#3

C11

SLOPE EASEMENT PLAT REF.#1. PURSUANT TO PLAT REF.#3, "SLOPE EASEMENTS MAY BE MODIFIED OR VACATED UPON FINAL GRADING OF TRACTS".

A BLANKET DRAINAGE EASEMENT IS HEREBY CREATED FOR THE BENEFIT OF TRACTS 18B–4 & 18B–5. WITHIN TRACT 18A

## TRACT 18A

29.817 Ac.±
26.791 Ac.± w/o OPEN SPACE
#4000 BECKNER ROAD

S00°00'00"E 1142.31'

L=9.83' ℄ T–RAIL 680+00 #4 REBAR L.S. 7014

ESTANCIAS DE LAS SOLERAS
UNIT 1A & 1B
PLAT 814/39–43

WALKING RAIN RD
56' R/W PLAT 805/34

50' PNM TRANSMISSION EASEMENT, INST.#1802604 & INST.# 1802605 C24 C25 N70°04'36"E 201.94' 288.06'

14.5' PUE

10' PUE, REF.#3

N70°04'36"E 172.21'

5' TRAIL EASEMENT REF.#3

S68°11'50"E 34.42'

L7 L8 C10 N70°04'36"E 26.61' L12

TRACT 18B–4
2.303 Ac.±
# BECKNER ROAD

292.02'

25' PUBLIC WATER & SEWER EASEMENT

S29°09'21"E 358.23'

N60°50'12"E 212.08' 38.01' 26.73' 52.55' 84.71'

C27 26.00' N29°09'45"W

FIRE LANE

26' PAE 172.55'

C26

42' ACCESS EASEMENT S60°44'22"W 319.39'

10' PUE

N29°09'21"W 666.03'

DETAIL 1"=50'

S24°33'06"E 52.24' L:15.20' 20'DE REF.#3

50' PNM TRANSMISSION EASEMENT, INST.#1802604 & INST.# 1802605

C2 C6 C8 C9 C7 10' PUE, REF.#3 L4 L2 L3 C1 C15 C16 318.45' 327.83'

20'DE A:28.05'

TRACT 18B–1
1.156 Ac.± ROAD

SLE, REF.#3 N37°39'40"W 285.44' 205.82'

10' PUE

S64°24'25"W 172.96'

25' WSE

26' 52' PAE

SLE, PLAT 809/3–4 HEREBY VACATED PURSUANT TO SAID PLAT

PAE WIDTH VARIES

L5 L9 L11 C17 INST.#_____ PUE,

C18 C6 L10 C19 C20 C5

TRACT 18B–2
9.743 Ac.±
8.441 Ac.± w/o OPEN SPACE
#4200 BECKNER ROAD

N60°49'25"E 26' PAE 505.52' 26.00'

214.30'

373.48'

C21 C22 C4 C3 N29°09'30"W 123.59'

TRACT 18B–3
1.760B Ac.± 2.059 Ac.± w/o OPEN SPACE ROAD
N37°29'40"W 569.13'

TRACT 18B–5
2.7404 Ac.±
2.007 Ac.± w/o OPEN SPACE
#4120 BECKNER ROAD

374.01'

100' OPEN SPACE, REF.#1, REFER TO NOTE #12

C12

SOUTHBOUND LANES

S60°50'03"W BACK, T–RAIL 668+96.92 103.63'

INTERSTATE 25
RIGHT OF WAY MAP
NEW MEXICO PROJECT NO.
I–025–5(36)272
JUNE 18, 1971

S60°50'03"W 319.39'

S60°50'03"W 223.59' 566.80' 92.65' BACK, T–RAIL

S60°50'03"W 122.60'

10' UNDERGROUND UTILITY EASEMENT PLAT 714/14–26

TRACT 19
LAS SOLERAS
PLAT 809/3–4

# PRELIMINARY SERIAL SUBDIVISION PLAT
## LAS SOLERAS TRACT 18B
PREPARED FOR
## SANTA FE LAS SOLERAS MEDICAL DEVELOPMENT LLC,
## A DELAWARE LIMITED LIABILITY COMPANY

LYING WITHIN SECTION 17, T.16N., R.9E., N.M.P.M.
CITY AND COUNTY OF SANTA FE, N.M.

**PURPOSE: TO CREATE 4 ADDITIONAL COMMERCIAL LOTS**

GRID

SCALE 1" = 100' FEET
100 0 100

DIEGO J. SISNEROS, NMPLS#13986 / /2025

DAWSON SURVEYS INC.
PROFESSIONAL LAND SURVEYORS
7505 MALLARD WAY, SUITE A
S.F., N.M., 87507 PH505–471–6660



FILE# 10831SS DATE: 1/16/2025

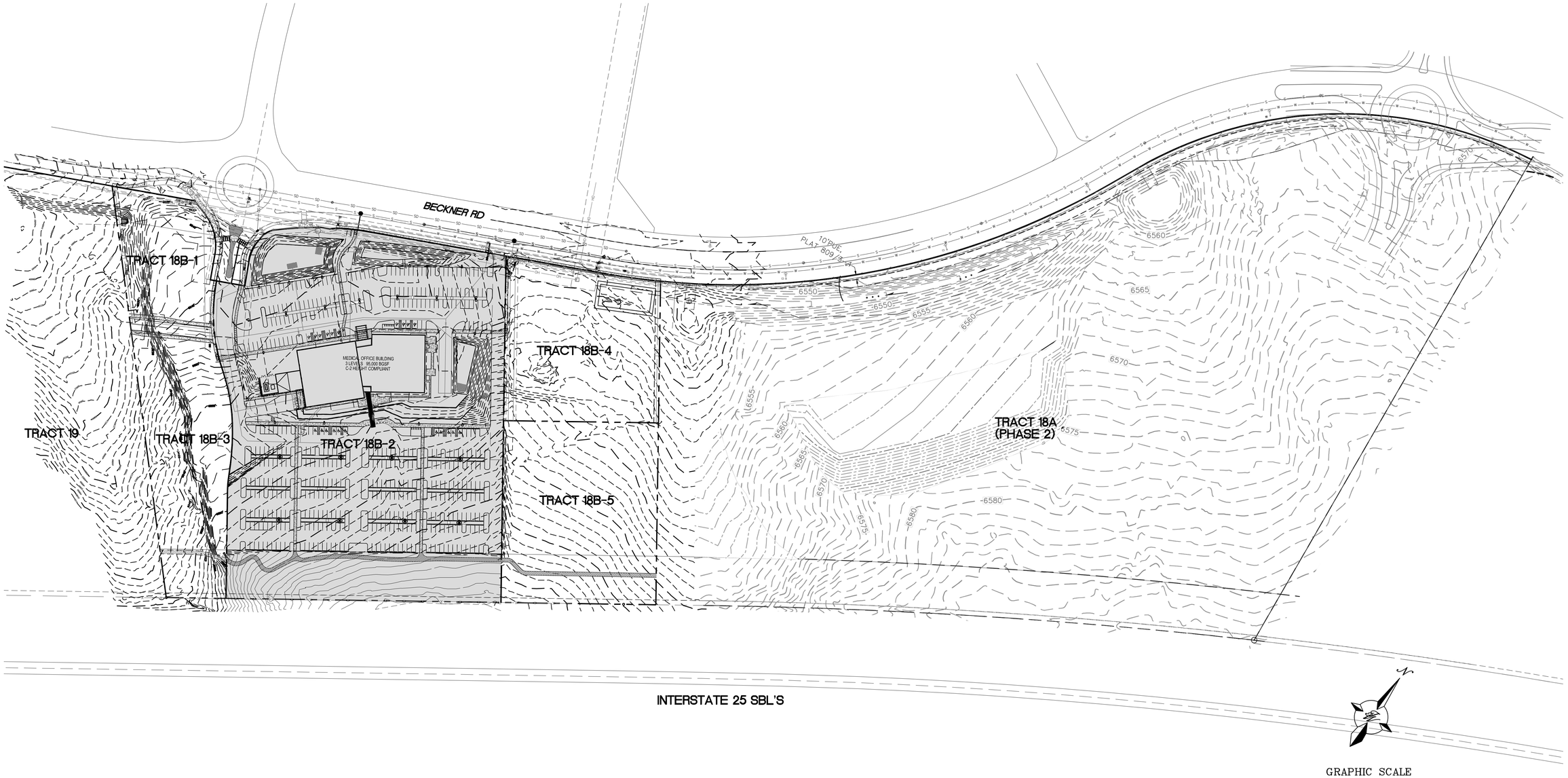


GRAPHIC SCALE

100 0 50 100

( IN FEET )
1 inch = 100 ft.

| | | |
|---|---|---|
| ENGINEER'S SEAL<br>RONALD R. BOHANNAN NEW MEXICO 7868 PROFESSIONAL ENGINEER<br>1-15-25<br>RONALD R. BOHANNAN P.E. #7868 | LAS SOLERAS TRACTS 18-A AND B SERIAL SUBDIVISION<br>EXISTING SURVEY AND CONDITIONS<br>TIERRA WEST, LLC<br>5571 MIDWAY PARK PL NE<br>ALBUQUERQUE, NEW MEXICO 87109<br>(505) 858-3100<br>www.tierrawestllc.com | DRAWN BY PM<br>DATE 1-15-25<br>DRAWING 2022040<br>SHEET # 1<br>JOB # 2022040 |

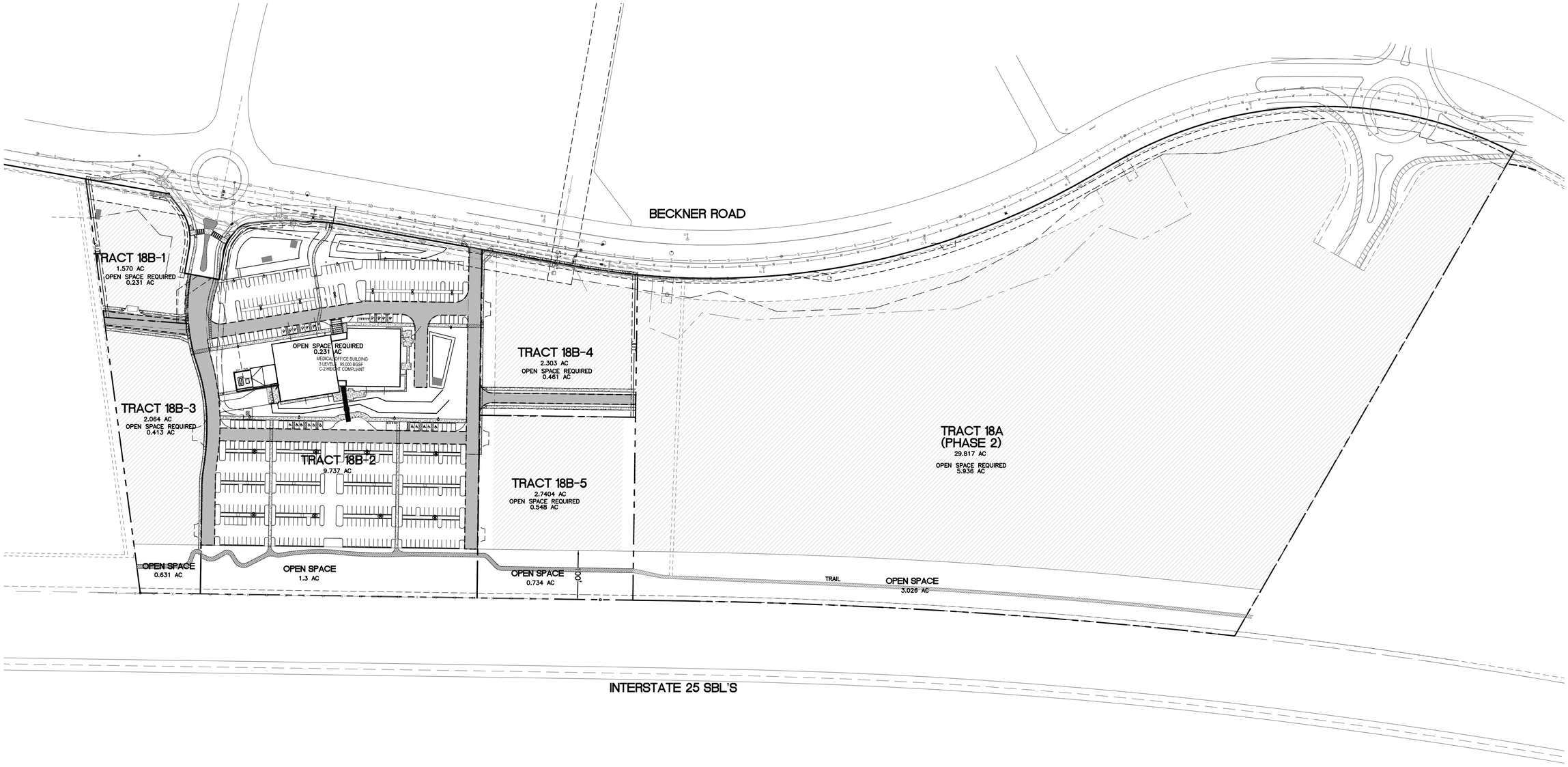


GRAPHIC SCALE

100 0 50 100

( IN FEET )
1 inch = 100 ft.

## NOTES

1. TRACTS 18B-1, 18B-2, 18B-3, 18B-4 AND 18B-5 ARE INCLUDED AS PHASE 1
2. TRACT 18-A IS INCLUDED AS PHASE 2
3. TRACT 18-B2 IS EXISTING DEVELOPED MEDICAL OFFICE BUILDING (MOB)
4. BUILDABLE AREAS SHOWN FOR TRACTS 18-A,B1,3,4 AND 5. 25% REQUIRED OPEN SPACE CAN BE ATTAINED GIVEN THE 60% LIMIT ON LOT COVERAGE FOR BUILDINGS AND AMENITIES AND GIVEN THE EXISTING 100' OPEN SPACE ALONG THE SOUTHERN EDGE OF TRACTS 18B-3 AND 18B-5
5. PARKING WILL MEET CITY STANDARDS FOR PROPOSED USES (TBD)

BUILDABLE AREA

| Open Space Calculations | | | | |
|---|---|---|---|---|
| Tract | Acreage | 25% Open Space Required (Acres) | 20% Open Space Required with passive water harvesting credit (Acres) | Notes |
| 18B-1 | 1.157 | 0.289 | 0.231 | |
| 18B-2 | 9.737 | - | 1.947 | Parcel built out - passive water harvesting employe |
| 18B-3 | 2.0639 | 0.516 | 0.413 | |
| 18B-4 | 2.303 | 0.576 | 0.461 | |
| 18B-5 | 2.7404 | 0.685 | 0.548 | |
| 18A | 29.817 | 7.454 | 5.963 | |

## SETBACK

| | |
|---|---|
| STREET (FRONT) | 15' |
| SIDE YARD | 0' |
| REAR YARD | 10' |

ENGINEER'S SEAL

RONALD R. BOHANNAN NEW MEXICO 7868 PROFESSIONAL ENGINEER

2-12-25

RONALD R. BOHANNAN
P.E. #7868

# LAS SOLERAS TRACTS 18-A AND B SERIAL SUBDIVISION

## OVERALL LAYOUT AND PHASING PLAN

TIERRA WEST, LLC
5571 MIDWAY PARK PL NE
ALBUQUERQUE, NEW MEXICO 87109
(505) 858-3100
www.tierrawestllc.com

DRAWN BY: PM
DATE: 2-12-25
DRAWING: 2022040
SHEET #: 2
JOB #: 2022040

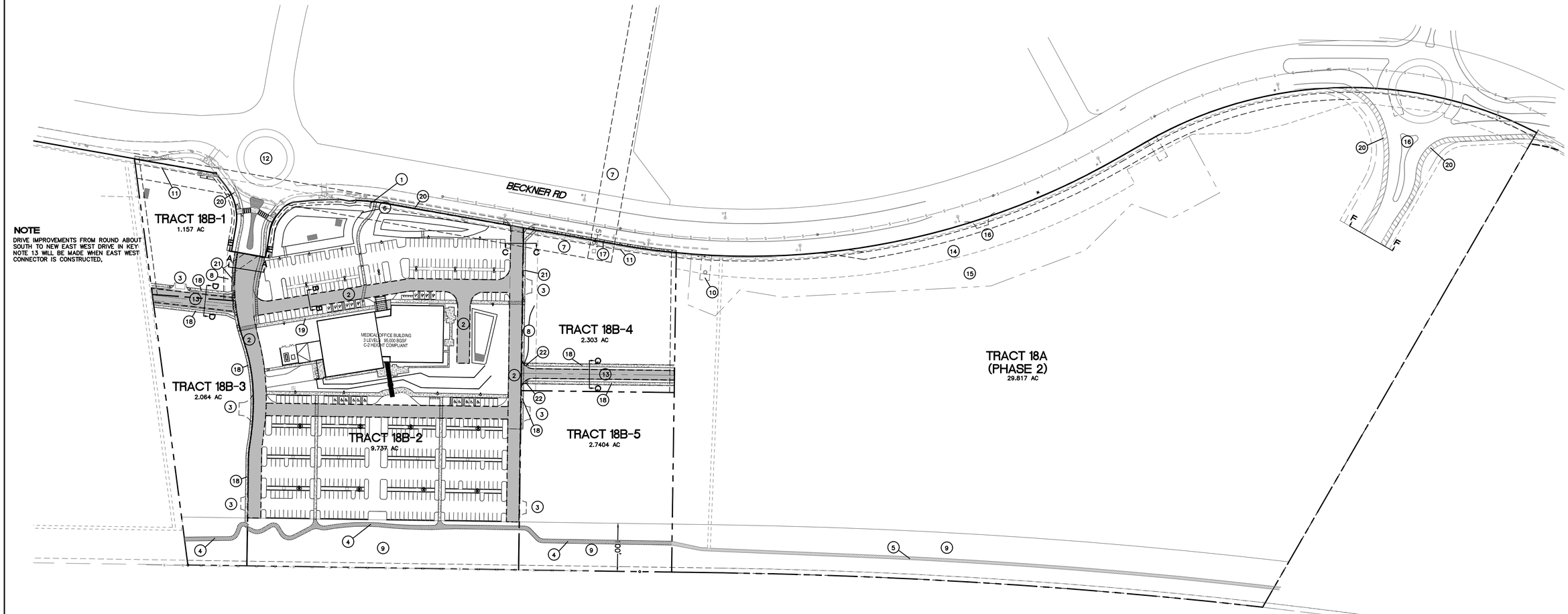


**NOTE**

DRIVE IMPROVEMENTS FROM ROUND ABOUT SOUTH TO NEW EAST WEST DRIVE IN KEY NOTE 13 WILL BE MADE WHEN EAST WEST CONNECTOR IS CONSTRUCTED,

**KEYED NOTES**

1. MONUMENT SIGN
2. ACCESS EASEMENT AND FIRE LANE, 26' MINIMUM (EXISTING)
3. CURB CUTS FOR LOT ACCESS (PHASE 1)
4. EXISTING 8' PAVED TRAIL
5. PROPOSED 10' PAVED TRAIL
6. PNM EASEMENT, WIDTH VARIES
7. 50' PNM TRANSMISSION EASEMENT
8. 25' WATER AND SANITARY SEWER EASEMENT
9. 100' OPEN SPACE
10. 20' DRAINAGE EASEMENT
11. 10' PUE
12. BECKNER RD/WALKING RAIN ROUNDABOUT
13. ACCESS EASEMENT AND FIRE LANE, 42' IF SUB-COLLECTOR, 52' IF COLLECTOR
14. SLOPE EASEMENT, WIDTH VARIES
15. TEMPORARY DRAINAGE EASEMENT
16. FUTURE CURB CUT, PHASE 2 (FINAL LOCATION TO BE DETERMINED W/DEVELOPMENT PLAN)
17. NEW 6' CONCRETE SIDEWALK
18. NEW 5' CONCRETE SIDEWALK
19. EXISTING 7' CONCRETE SIDEWALK
20. EXISTING 6' CONCRETE SIDEWALK (MINIMUM)
21. EXISTING 5.5' CONCRETE SIDEWALK
22. UNIDIRECTIONAL ACCESSIBLE RAMP

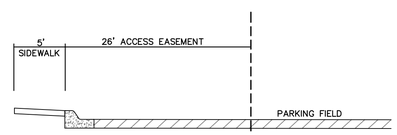


SECTION C-C

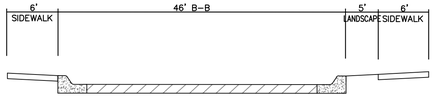


SECTION E-E

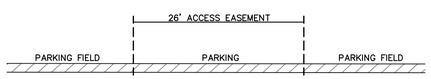


SECTION B-B

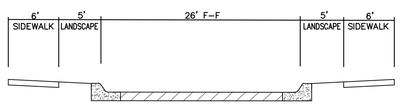


SECTION F-F

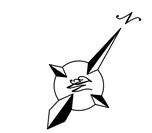

GRAPHIC SCALE

100 0 50 100

( IN FEET )
1 inch = 100 ft.

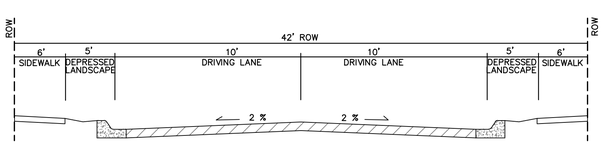


SECTION G-G

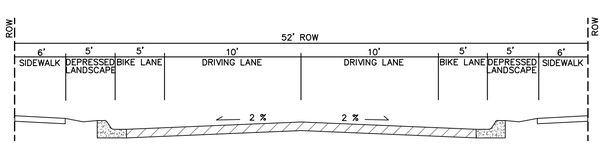


SECTION D-D

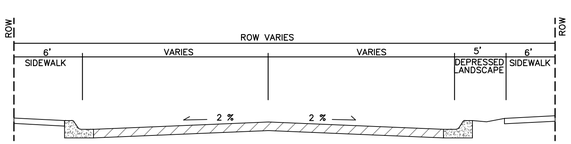


SECTION A-A

ENGINEER'S SEAL

RONALD R. BOHANNAN NEW MEXICO 7868 PROFESSIONAL ENGINEER

2-12-25

RONALD R. BOHANNAN
P.E. #7868

**LAS SOLERAS TRACTS 18-A AND B**
**SERIAL SUBDIVISION**

**ACCESS EXHIBIT**

TIERRA WEST, LLC
5571 MIDWAY PARK PL NE
ALBUQUERQUE, NEW MEXICO 87109
(505) 858-3100
www.tierrawestllc.com

DRAWN BY: PM
DATE: 2-12-25
DRAWING: 2022040
SHEET #: 3
JOB #: 2022040

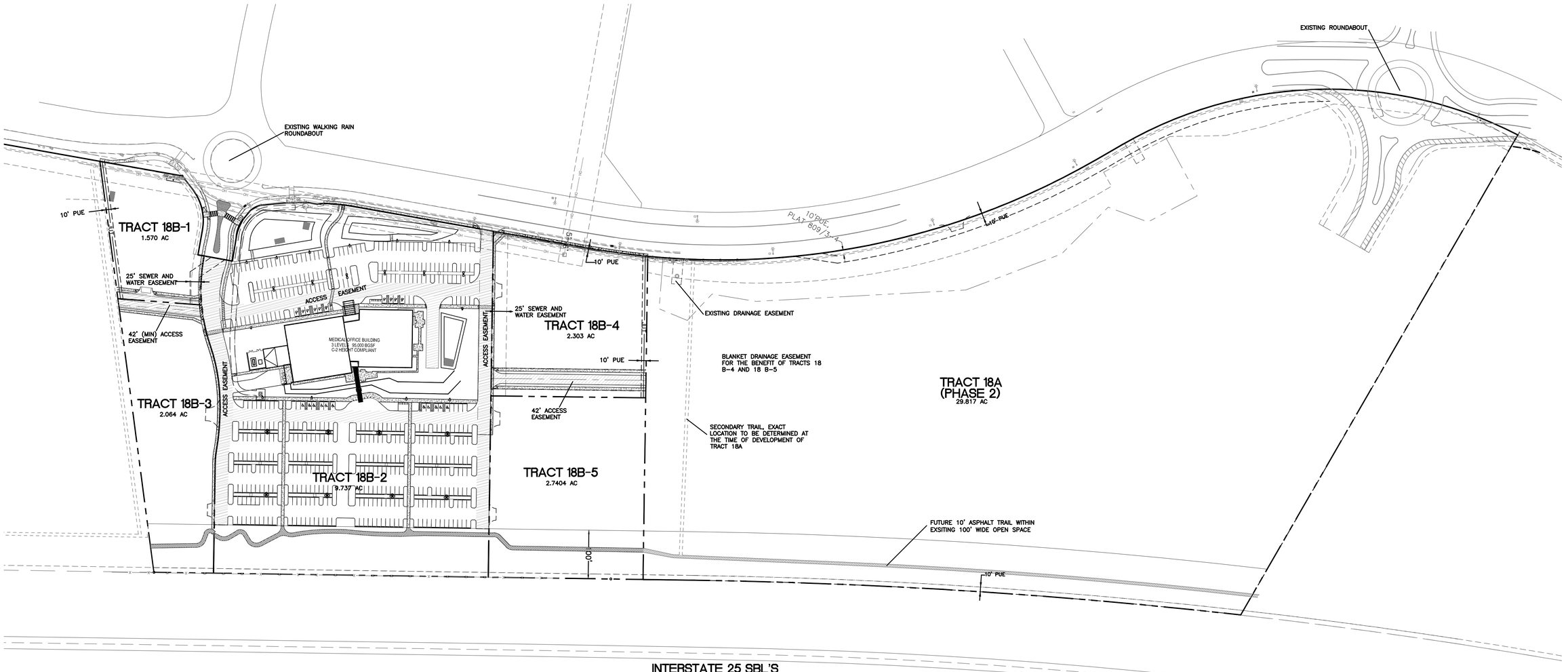


NOTES

1. BECKNER ROAD OFF SITE IMPROVEMENTS FRONTING TRACT 18A TO BE DESIGNED AND BUILT WITH FUTURE APPROVED DEVELOPMENT PLAN ONCE A USE/PROJECT HAS BEEN DEFINED FOR THAT PARCEL
2. TRACT 18A TRAILS TO BE INSTALLED AT THE TIME OF DEVELOPMENT PLAN SUBMITTAL PER THE LAS SOLERAS MASTER PLAN TRAILS EXHIBIT ONCE A USE/PROJECT HAS BEEN DEFINED

GRAPHIC SCALE

100 0 50 100

( IN FEET )
1 inch = 100 ft.

| | | |
|---|---|---|
| ENGINEER'S SEAL<br>RONALD R. BOHANNAN NEW MEXICO 7868 PROFESSIONAL ENGINEER<br>2-12-25<br>RONALD R. BOHANNAN P.E. #7868 | LAS SOLERAS TRACTS 18-A AND B SERIAL SUBDIVISION<br>VEHICLE AND PEDESTRIAN CIRCULATION AND UTILITY EASEMENT EXHIBIT<br>TIERRA WEST, LLC<br>5571 MIDWAY PARK PL NE<br>ALBUQUERQUE, NEW MEXICO 87109<br>(505) 858-3100<br>www.tierrawestllc.com | DRAWN BY PM<br>DATE 2-12-25<br>DRAWING 2022040<br>SHEET # 3-A<br>JOB # 2022040 |

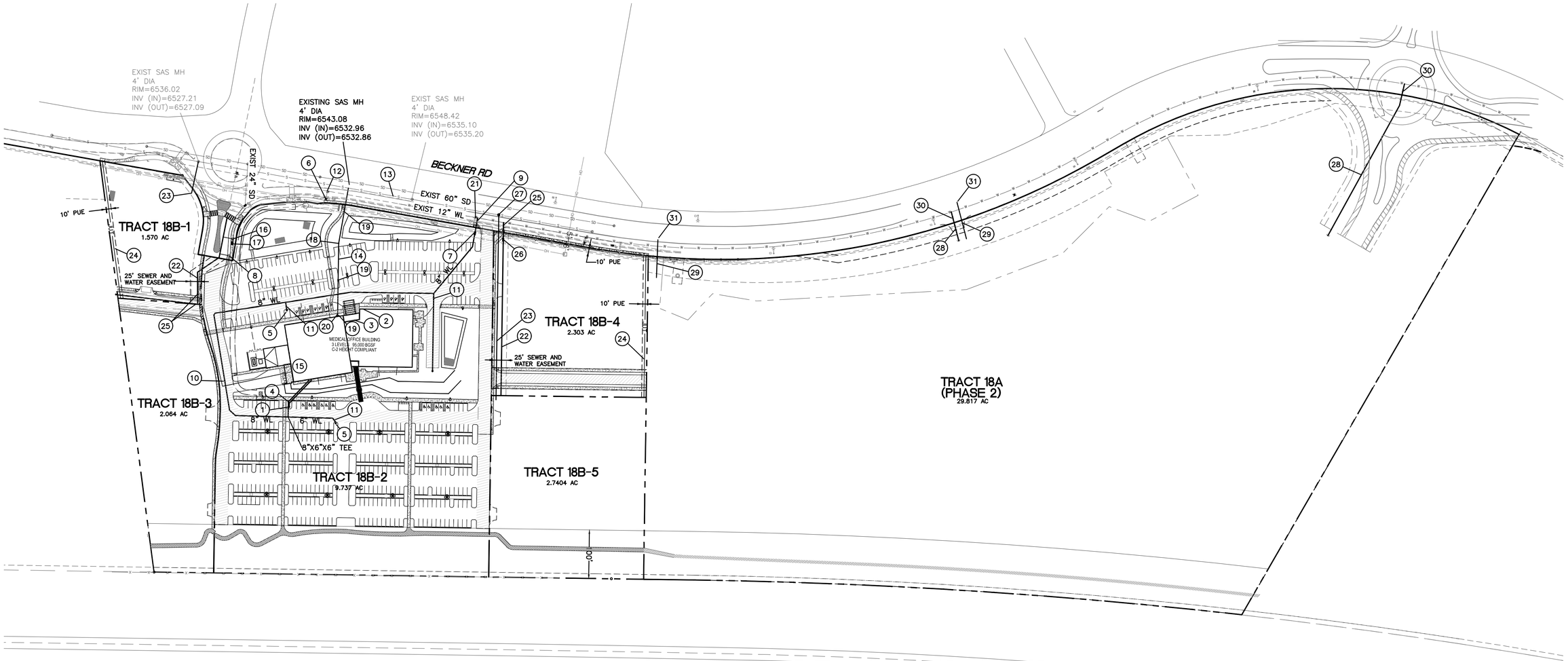


## KEYED NOTES

### EXISTING UTILITY IMPROVEMENTS

1. REMOTE FDC W/4" CONNECTION TO BUILDING
2. BUILDING ADDRESS
3. KNOX BOX
4. PIV
5. NEW FIRE HYDRANT (PRIVATE)
6. EXISTING FIRE HYDRANT (PUBLIC)
7. 8" BACKFLOW PREVENTER W/HOT BOX
8. 3" DOMESTIC SERVICE METER
9. 8" GATE VALVE (PUBLIC)
10. 8" GATE VALVE (PRIVATE)
11. 6" GATE VALVE (PRIVATE)
12. EXISTING 6" GATE VALVE (PUBLIC)
13. EXISTING 10" SAS SDR26, S=1.75%
14. 6" SAS SERVICE, SCHEDULE 40 PVC (PRIVATE)
15. 6" FIRE LINE
16. 1-1/2" IRRIGATION METER/SERVICE
17. BACKFLOW PREVENTER (IRRIGATION)
18. INDUSTRIAL PRE-TREATMENT SAMPLING PORT
19. DOUBLE CLEANOUT
20. SANITARY SEWER BACKWATER VALVE
21. 12" GATE VALVE (PUBLIC)

### PROPOSED PHASE 1 UTILITY IMPROVEMENTS

22. 8" WATER LINE
23. 8" SANITARY SEWER LINE
24. ELECTRIC, GAS AND COMMUNICATION LINES (JOINT TRENCH)
25. 8" GATE VALVE (PUBLIC)
26. 8" BACKFLOW PREVENTER W/HOT BOX
27. 4' DIAMETER MANHOLE

### FUTURE PHASE 2 UTILITY IMPROVEMENTS

28. 8" WATER LINE
29. 8" SANITARY SEWER LINE
30. 8" GATE VALVE (PUBLIC)
31. 4' DIA SAS MANHOLE

GRAPHIC SCALE

100 0 50 100

( IN FEET )
1 inch = 100 ft.

ENGINEER'S SEAL

RONALD R. BOHANNAN NEW MEXICO 7868 PROFESSIONAL ENGINEER

2-12-25

RONALD R. BOHANNAN
P.E. #7868

# LAS SOLERAS TRACTS 18-A AND B SERIAL SUBDIVISION

## UTILITY EXHIBIT PHASE 1

TIERRA WEST, LLC
5571 MIDWAY PARK PL NE
ALBUQUERQUE, NEW MEXICO 87109
(505) 858-3100
www.tierrawestllc.com

DRAWN BY: PM
DATE: 2-12-25
DRAWING: 2022040
SHEET #: 4
JOB #: 2022040

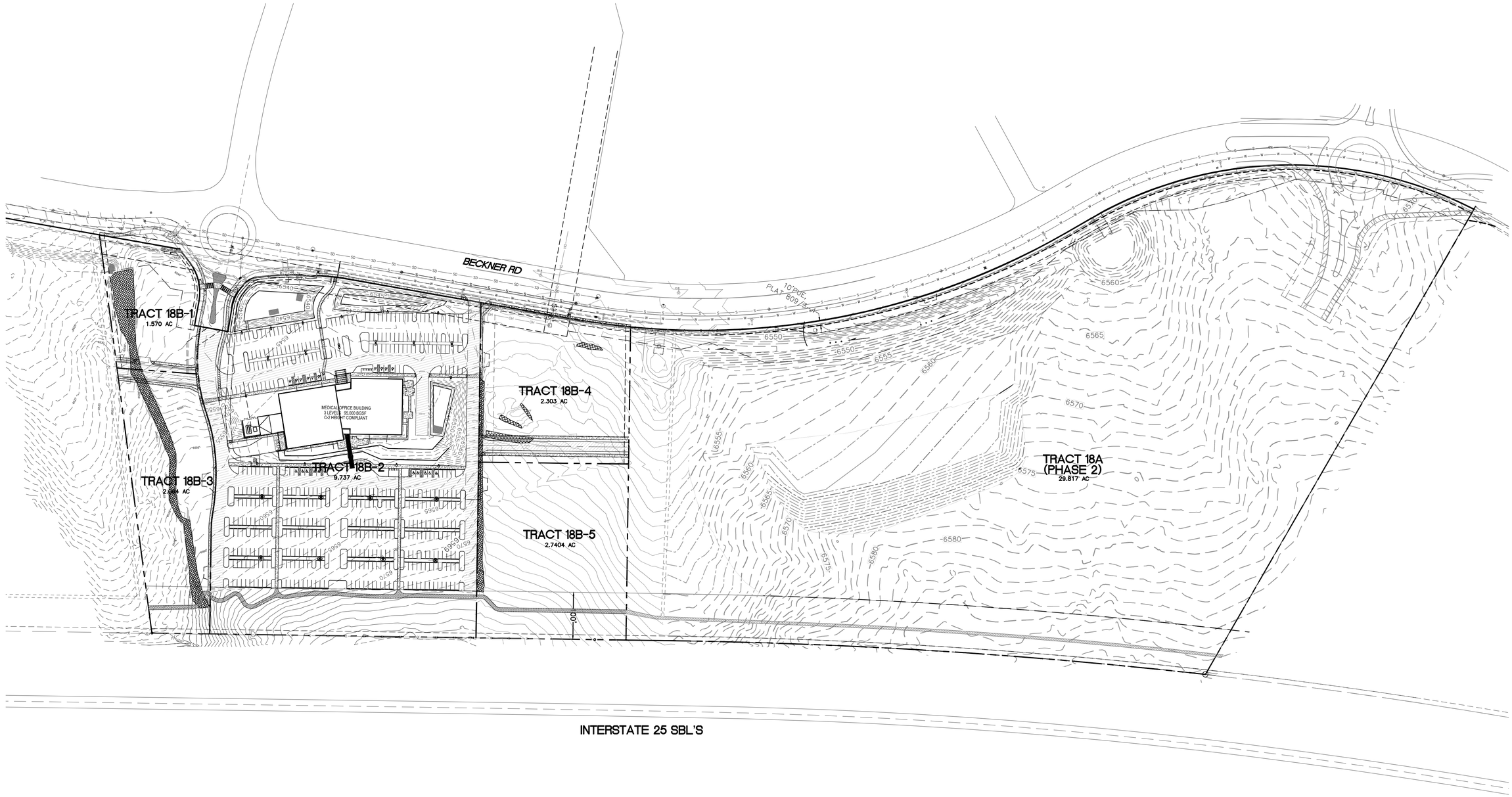


**LEGEND**

- AREA OF 30% OR GREATER (NATURAL)
- AREA OF 30% OR GREATER (MAN MADE/DISTURBED) PREVIOUSLY APPROVED FOR TRACT 18B-2. DOES NOT INCLUDE AREAS WITHIN CONSTRUCTED/EXISTING TRACT 18B-2 PREVIOUSLY APPROVED WITH MOB DEVELOPMENT
- AREA OF 20% TO 30% (NATURAL)

**NOTE**

BASED OF TOPOGRAPHIC AND AS BUILT SURVEY WITH 1 FOOT CONTOUR INTERVALS, AS SHOWN, LESS THAN ONE TENTH OF A PERCENT OF (0.1%) OF THE PROPERTY (TRACT 18B) CONSISTS OF NATURAL SLOPES GREATER THAN THIRTY PERCENT (30%)

ALL MANMADE SLOPES WITHIN THE PROPERTY WERE PREVIOUSLY APPROVED FOR THE EXISTING DEVELOPMENT WITHIN TRACT 18B-2

GRAPHIC SCALE

100 0 50 100

( IN FEET )
1 inch = 100 ft.

ENGINEER'S SEAL

RONALD R. BOHANNAN NEW MEXICO 7868 PROFESSIONAL ENGINEER

2-12-25

RONALD R. BOHANNAN
P.E. #7868

# LAS SOLERAS TRACTS 18-A AND B SERIAL SUBDIVISION

## TERRAIN MANAGEMENT PLAN

TIERRA WEST, LLC
5571 MIDWAY PARK PL NE
ALBUQUERQUE, NEW MEXICO 87109
(505) 858-3100
www.tierrawestllc.com

DRAWN BY: PM
DATE: 2-12-25
DRAWING: 2022040
SHEET #: 5
JOB #: 2022040

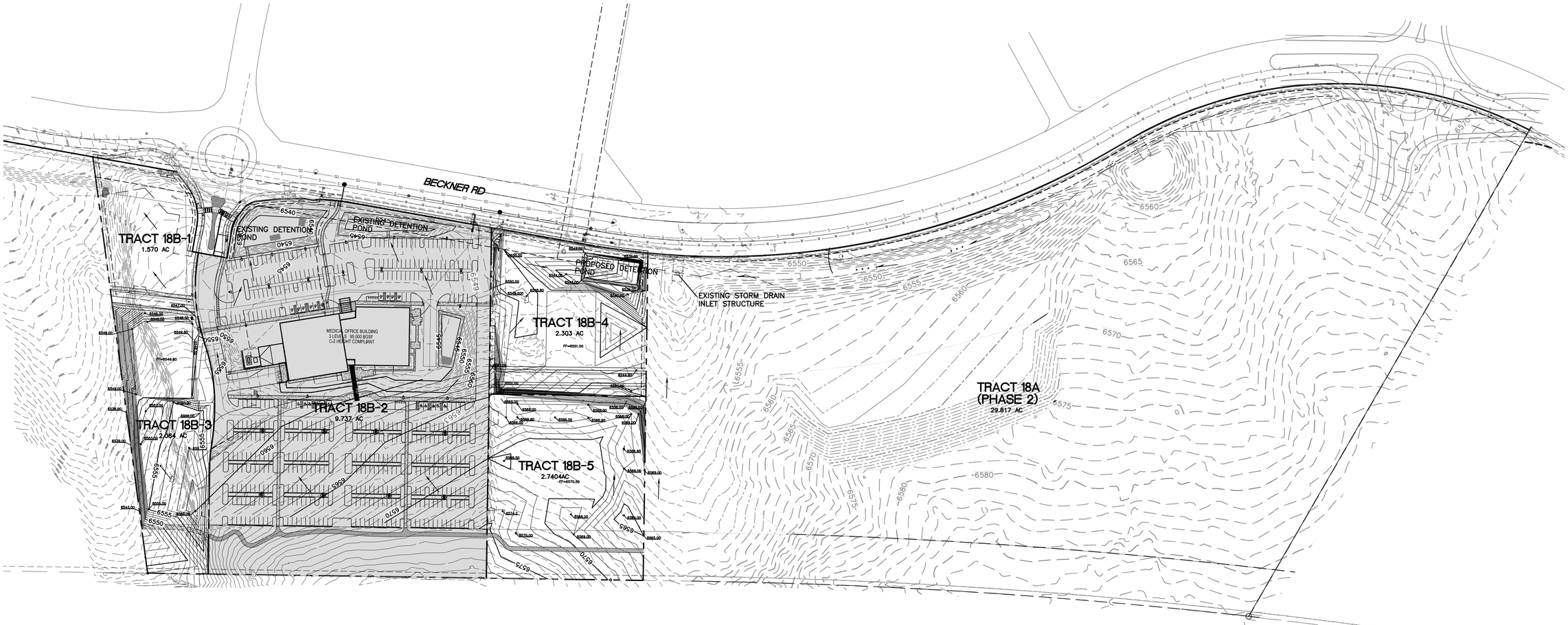


**NOTE**

FINAL GRADING AND STORM SEWER PROFILES TO BE DETERMINED BY FUTURE DEVELOPMENT PLAN AND PERMIT SETS

GRAPHIC SCALE

100 0 50 100

( IN FEET )
1 inch = 100 ft.

| | | |
|---|---|---|
| ENGINEER'S SEAL<br>RONALD R. BOHANNAN NEW MEXICO 7868 PROFESSIONAL ENGINEER<br>2-12-25<br>RONALD R. BOHANNAN P.E. #7868 | LAS SOLERAS TRACTS 18-A AND B SERIAL SUBDIVISION<br>GRADING PLAN<br>TIERRA WEST, LLC<br>5571 MIDWAY PARK PL NE<br>ALBUQUERQUE, NEW MEXICO 87109<br>(505) 858-3100<br>www.tierrawestllc.com | DRAWN BY PM<br>DATE 2-12-25<br>DRAWING 2022040<br>SHEET # 6<br>JOB # 2022040 |

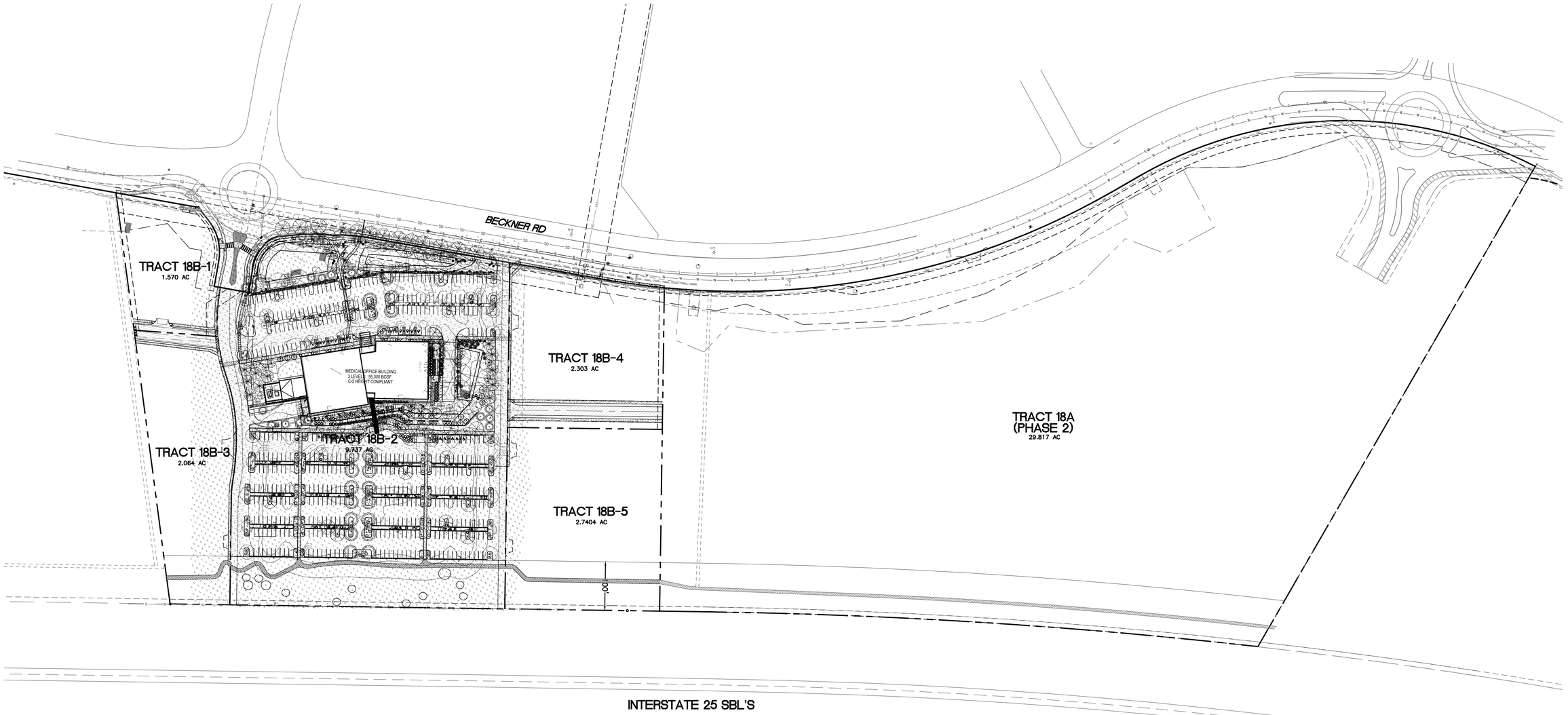


| Luminaire Schedule | | | |
|---|---|---|---|
| Symbol | Label | Qty | Arrangement |
| | 3-B4 | 8 | 3 @ 90 Degrees |
| | A4 | 8 | Single |
| | A5 | 1 | Single |
| | A6 | 6 | Single |
| | B3 | 4 | Single |
| | C4 | 7 | Single |
| | L | 2 | Single |
| | M_DIMMED 50% | 11 | Single |

GRAPHIC SCALE

100 0 50 100

( IN FEET )
1 inch = 100 ft.

ENGINEER'S SEAL

RONALD R. BOHANNAN NEW MEXICO 7868 PROFESSIONAL ENGINEER

2-12-25

RONALD R. BOHANNAN
P.E. #7868

LAS SOLERAS TRACTS 18-A AND B
SERIAL SUBDIVISION

LIGHTING EXHIBIT
(EXISTING)

TIERRA WEST, LLC
5571 MIDWAY PARK PL NE
ALBUQUERQUE, NEW MEXICO 87109
(505) 858-3100
www.tierrawestllc.com

DRAWN BY
PM

DATE
2-12-25

DRAWING
2022040

SHEET #
7

JOB #
2022040

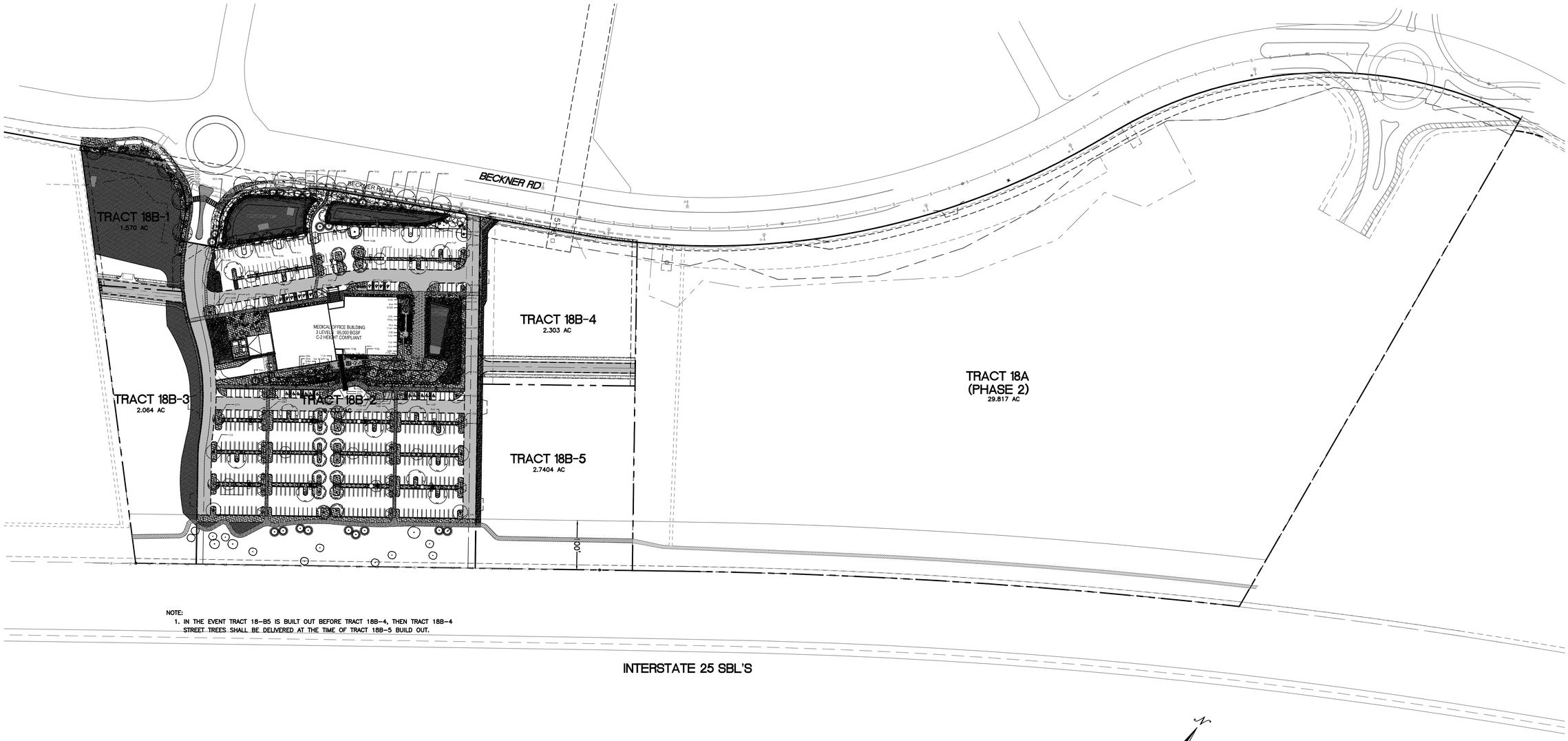


NOTE:
1. IN THE EVENT TRACT 18-B5 IS BUILT OUT BEFORE TRACT 18B-4, THEN TRACT 18B-4 STREET TREES SHALL BE DELIVERED AT THE TIME OF TRACT 18B-5 BUILD OUT.

GRAPHIC SCALE

100 0 50 100

( IN FEET )
1 inch = 100 ft.

ENGINEER'S SEAL

RONALD R. BOHANNAN NEW MEXICO 7868 PROFESSIONAL ENGINEER

2-12-25

RONALD R. BOHANNAN
P.E. #7868

**LAS SOLERAS TRACTS 18-A AND B**
**SERIAL SUBDIVISION**

**LANDSCAPE EXHIBIT (EXISTING)**

TIERRA WEST, LLC
5571 MIDWAY PARK PL NE
ALBUQUERQUE, NEW MEXICO 87109
(505) 858-3100
www.tierrawestllc.com

DRAWN BY: PM
DATE: 2-12-25
DRAWING: 2022040
SHEET #: 8
JOB #: 2022040

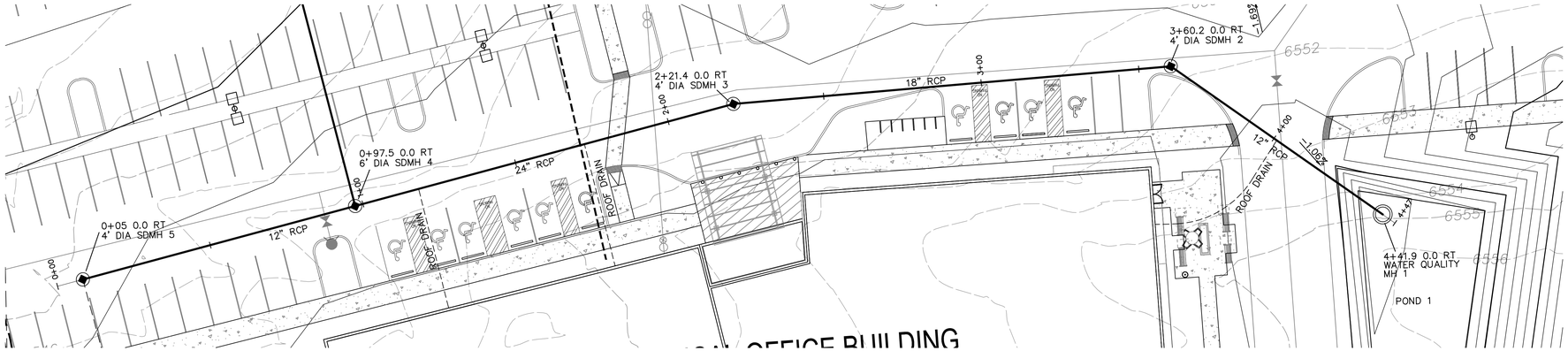


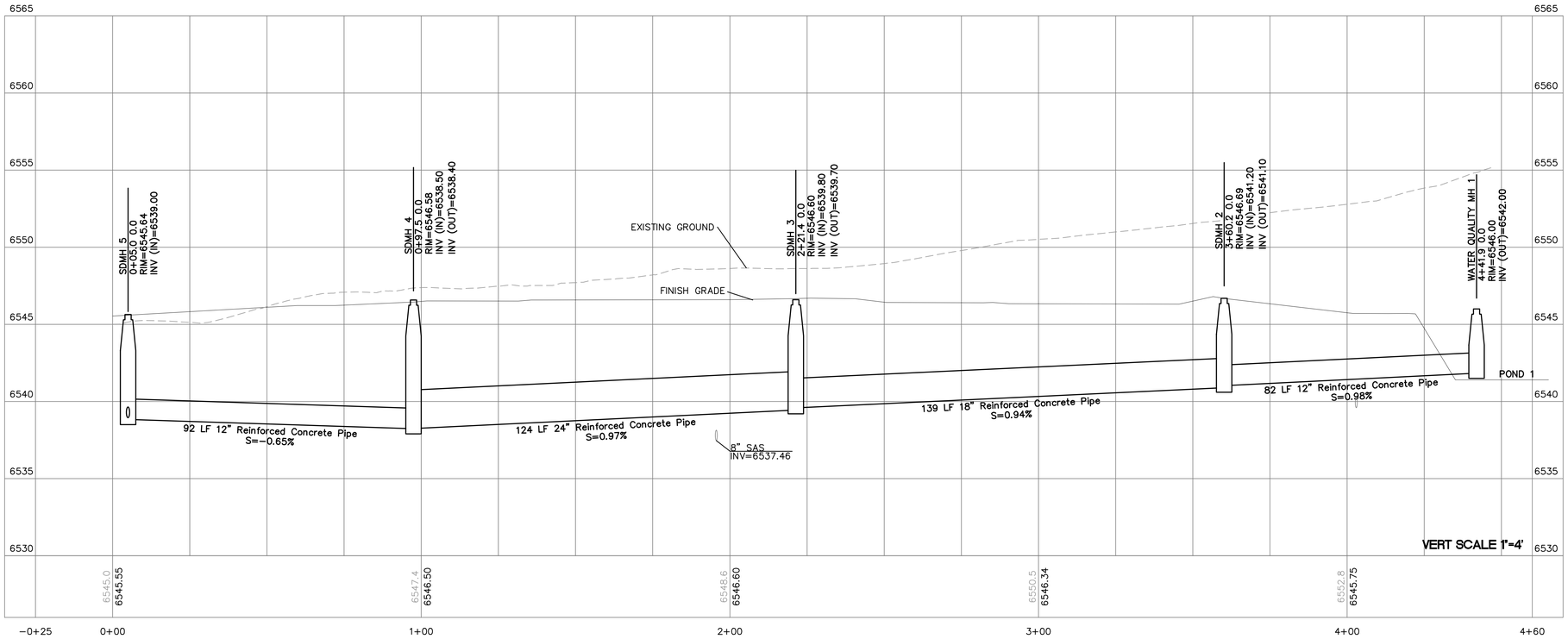


| | | |
|---|---|---|
| ENGINEER'S SEAL<br>RONALD R. BOHANNAN NEW MEXICO 7868 PROFESSIONAL ENGINEER<br>1-15-25<br>RONALD R. BOHANNAN P.E. #7868 | MERIDIAN MEDICAL OFFICE BUILDING<br>4200 BECKNER RD SANTA FE, NM 87507<br>STORM SEWER PLAN PROFILE EXISTING<br>TIERRA WEST, LLC<br>5571 MIDWAY PARK PL NE<br>ALBUQUERQUE, NEW MEXICO 87109<br>(505) 858-3100<br>www.tierrawestllc.com | DRAWN BY PM<br>DATE 1-15-25<br>DRAWING 2022040-GR<br>SHEET # GR-5<br>JOB # 2022040 |

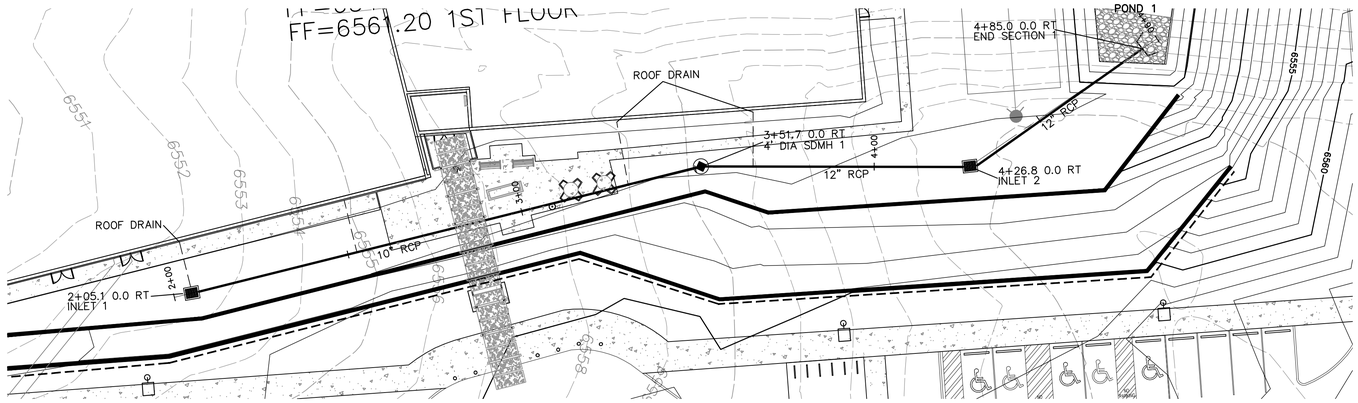


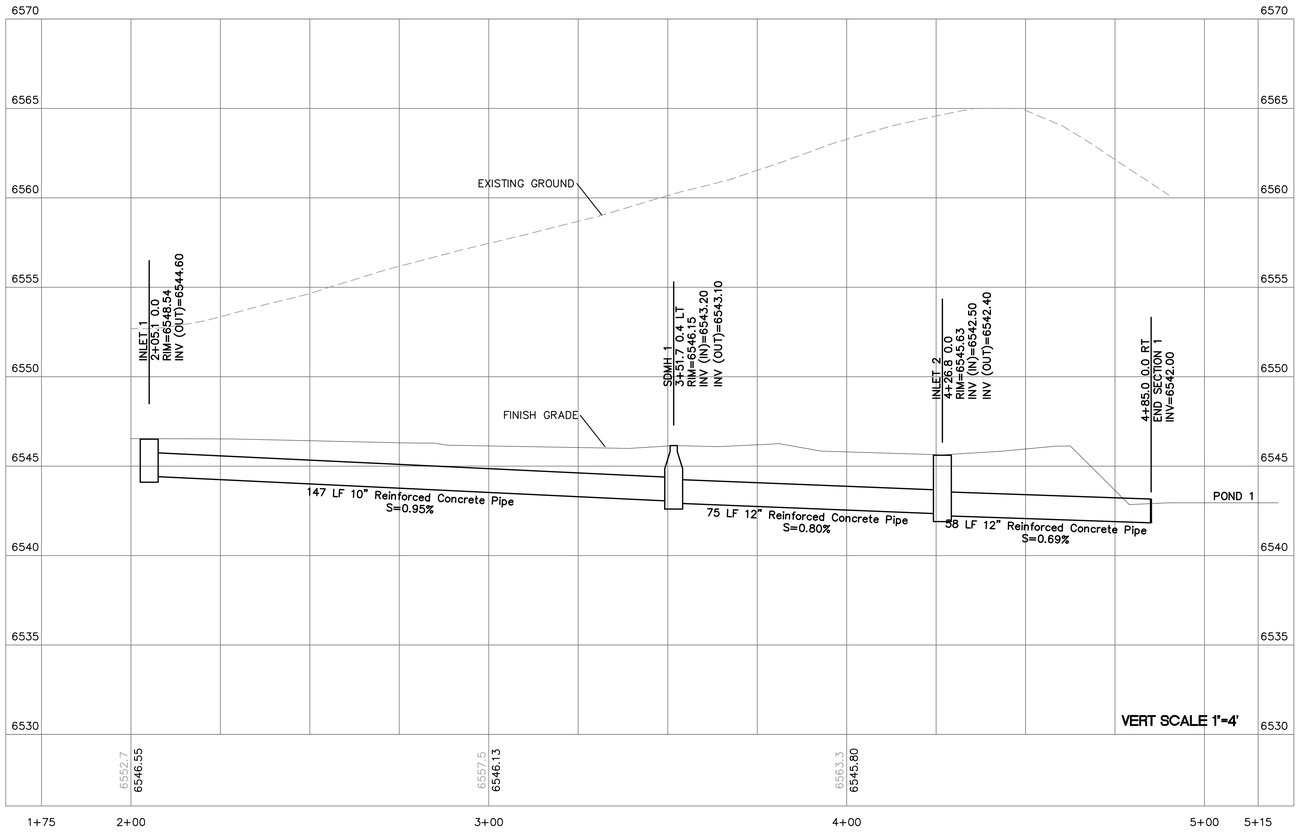




GRAPHIC SCALE

20 0 10 20

( IN FEET )
1 inch = 20 ft.

| | | |
|---|---|---|
| ENGINEER'S SEAL<br>RONALD R. BOHANNAN NEW MEXICO 7868 PROFESSIONAL ENGINEER<br>1-15-25<br>RONALD R. BOHANNAN P.E. #7868 | **MERIDIAN MEDICAL OFFICE BUILDING**<br>**4200 BECKNER RD SANTA FE, NM 87507**<br>**STORM SEWER PLAN AND PROFILE EXISTING** | DRAWN BY<br>PM<br>DATE<br>1-15-25<br>DRAWING<br>2022040-GR<br>SHEET #<br>**GR-6** |
| | TIERRA WEST, LLC<br>5571 MIDWAY PARK PL NE<br>ALBUQUERQUE, NEW MEXICO 87109<br>(505) 858-3100<br>www.tierrawestllc.com | JOB #<br>2022040 |




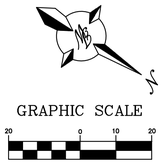


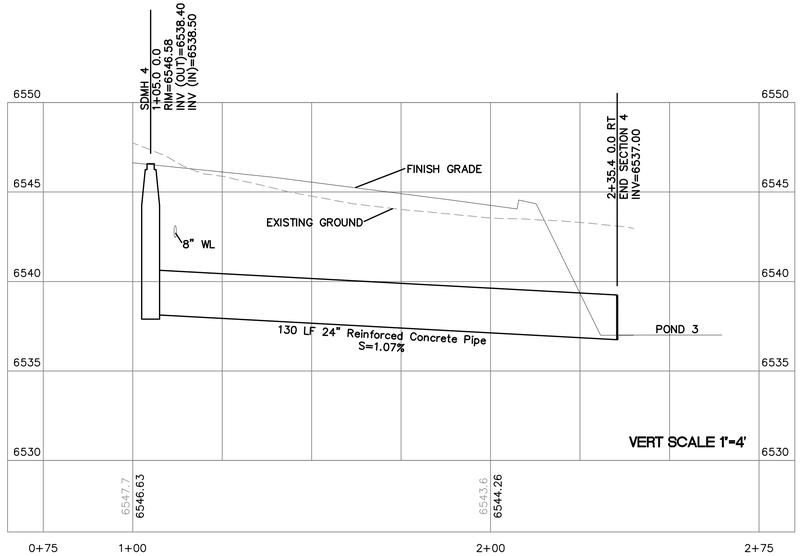


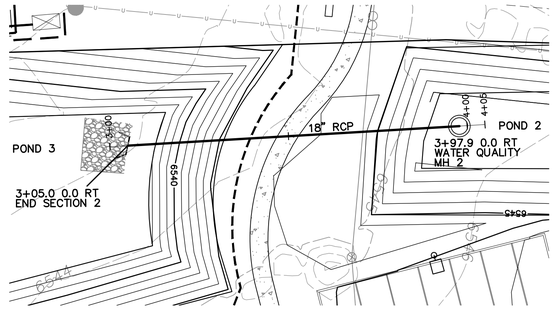





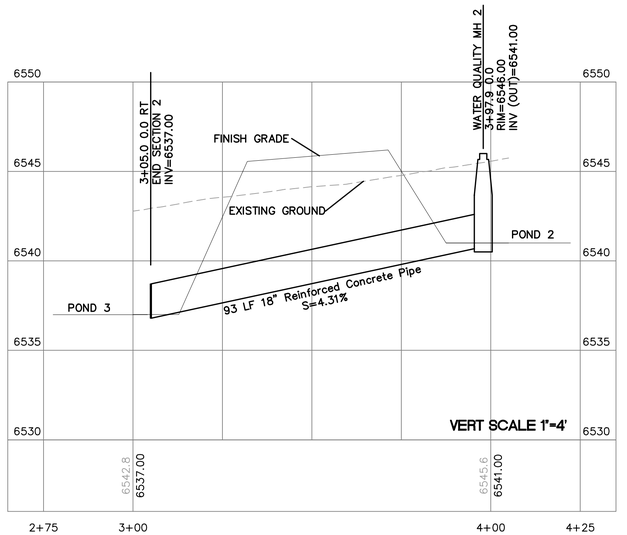


| | | |
|---|---|---|
| ENGINEER'S SEAL<br>RONALD R. BOHANNAN NEW MEXICO 7868 PROFESSIONAL ENGINEER<br>1-15-25<br>RONALD R. BOHANNAN<br>P.E. #7868 | **MERIDIAN MEDICAL OFFICE BUILDING**<br>**4200 BECKNER RD SANTA FE, NM 87507**<br>**STORM SEWER PLAN AND PROFILE EXISTING**<br>TIERRA WEST, LLC<br>5571 MIDWAY PARK PL NE<br>ALBUQUERQUE, NEW MEXICO 87109<br>(505) 858-3100<br>www.tierrawestllc.com | DRAWN BY<br>PM<br>DATE<br>1-15-25<br>DRAWING<br>2022040-GR<br>SHEET #<br>GR-7<br>JOB #<br>2022040 |

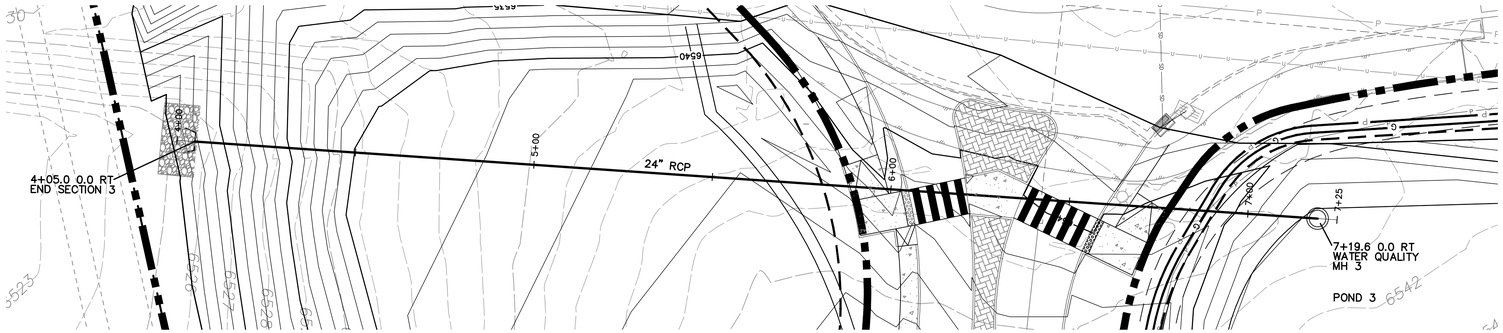




GRAPHIC SCALE

20 0 10 20

( IN FEET )
1 inch = 20 ft.

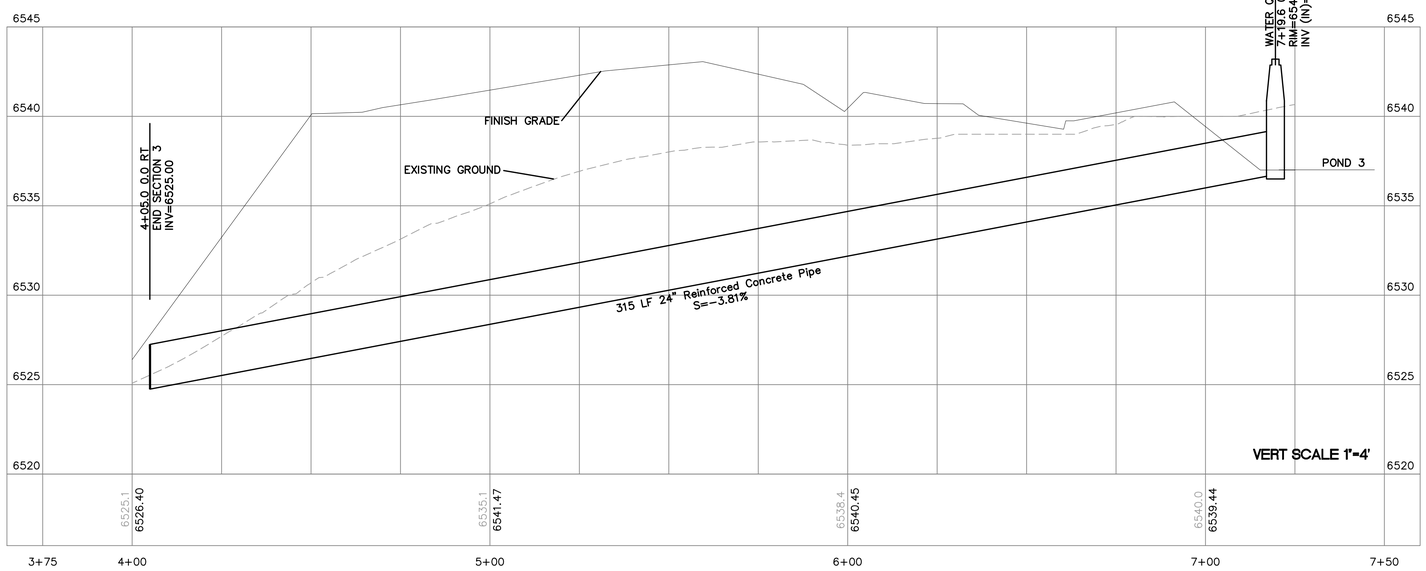


| | | |
|---|---|---|
| ENGINEER'S SEAL<br>RONALD R. BOHANNAN NEW MEXICO 7868 PROFESSIONAL ENGINEER<br>1-15-25<br>RONALD R. BOHANNAN<br>P.E. #7868 | **MERIDIAN MEDICAL OFFICE BUILDING**<br>**4200 BECKNER RD SANTA FE, NM 87507**<br>**STORM SEWER PLAN AND PROFILE EXISTING**<br>TIERRA WEST, LLC<br>5571 MIDWAY PARK PL NE<br>ALBUQUERQUE, NEW MEXICO 87109<br>(505) 858-3100<br>www.tierrawestllc.com | DRAWN BY<br>PM<br>DATE<br>1-15-25<br>DRAWING<br>2022040-GR<br>SHEET #<br>GR-8<br>JOB #<br>2022040 |

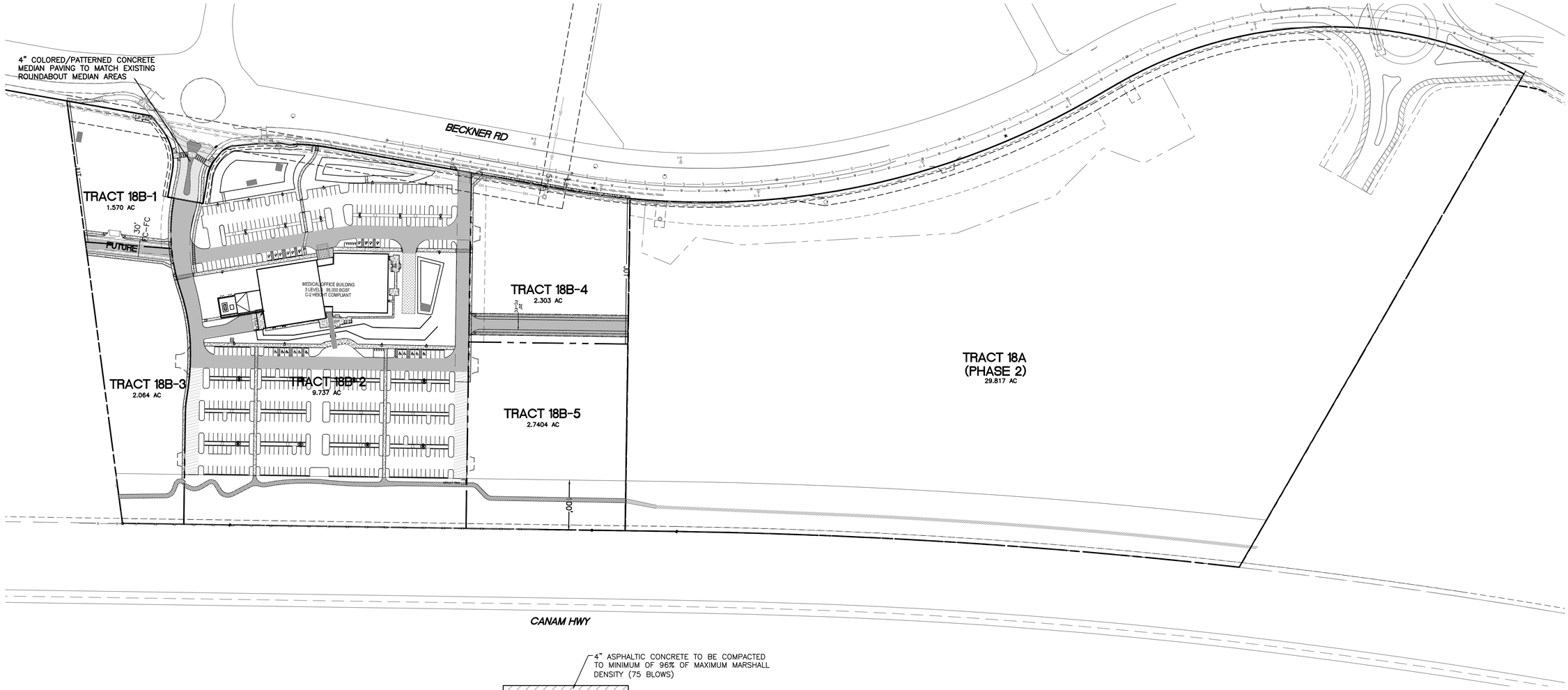


## LEGEND

- CURB & GUTTER
- BOUNDARY LINE
- BUILDING
- EXISTING CURB & GUTTER
- CONCRETE
- HEAVY DUTY PAVING
- LIGHT DUTY PAVING
- ASPHALT PAVING (ADD ALT GRASSCRETE PAVING)
- RURAL PAVING

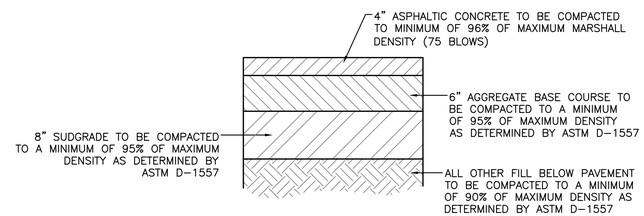


### AUTOMOBILE DRIVEWAYS AND AREAS SUBJECT TO SEMI-TRUCKS TYPICAL PAVING SECTION

1" = 1' DESIGNATED BY TERRACON

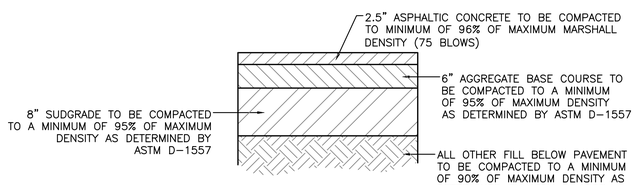


### AUTOMOBILE PARKING TYPICAL PAVING SECTION

1" = 1' DESIGNATED BY TERRACON

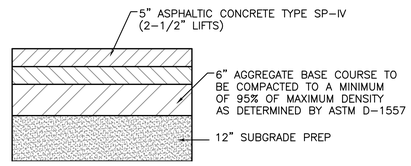


### RURAL PAVING TYPICAL SECTION

1" = 1' DESIGNATED BY TERRACON

**NOTE**

PAVING SECTIONS SHALL BE CONFIRMED WITH RECOMMENDATION PROVIDED IN THE GEOTECHNICAL REPORT PREPARED BY TERRACON (9-14-22)

GRAPHIC SCALE

50 0 25 50

( IN FEET )
1 inch = 50 ft.

ENGINEER'S SEAL

RONALD R. BOHANNAN NEW MEXICO 7868 PROFESSIONAL ENGINEER

2-12-25

RONALD R. BOHANNAN P.E. #7868

LAS SOLERAS TRACTS 18-A AND B SERIAL SUBDIVISION

PAVING PLAN

TIERRA WEST, LLC
5571 MIDWAY PARK PL NE
ALBUQUERQUE, NEW MEXICO 87109
(505) 858-3100
www.tierrawestllc.com

DRAWN BY PM

DATE 2-12-25

DRAWING

SHEET # PAV-1

JOB # 2022040