Agenda

Regular Meeting of the Public Works and Utilities Committee
January 21, 2025 at 5:00 PM
Council Chambers, City Hall
200 Lincoln Avenue

Procedures for Public Works and Utilities Committee Meeting

Viewing: Members of the public may view the meeting through the Government Channel on Comcast Channel 28 and Comcast HD928 or may stream the meeting live on the City of Santa Fe's YouTube channel. The YouTube livestream can be accessed from most smartphones, tablets, or computers.

The agenda and packet for the meeting will be posted at https://santafe.primegov.com/public/portal.

1. Call to Order
2. Roll Call
3. Approval of Agenda
4. Approval of Consent Agenda
5. Public Comment
6. Presentations
7. Action Items: Consent Agenda

   a. Request for Approval of the January 6, 2025, Public Works & Utilities Committee Meeting Minutes. (Jonna Stack, Project Administrator; jlstack@santafenm.gov)

      Committee Review:
      Public Works & Utilities Committee: 01/21/2024

   b. Request for Approval of a Construction Contract with GM Emulsion LLC for the Construction of S100770 Tierra Contenta Trail Extension - Phase A in the Total Amount of $1,111,917 Excluding NMGRT for a Two-Year Term. (Romella Glorioso-Moss, Complete Streets Capital Projects Manager; rsglorioso-moss@santafenm.gov)

      Committee Review:

Public Works & Utilities Committee: 01/21/2025
Finance Committee: 01/27/2025
Governing Body: 01/29/2025

c. Request for Approval to Accept the New Mexico Department of Transportation Aviation Division Grant SAF-25-02 in the Amount of $540,000 for the North Apron Reconstruction Project for a Two-Year Term. (James Harris, Airport Manager; jcharris@santafenm.gov; Kelly Bynon, Administrative Manager; kabynon@santafenm.gov)

1. Request for Approval of a Budget Amendment Resolution (BAR) in the Total Amount of $600,000 to Increase WIP Design and WIP Construction Using $540,000 from the New Mexico Department of Transportation Aviation Division Funding and $60,000 from the Airport Fund Balance for the North Apron Reconstruction Project.

Committee Review:
Public Works & Utilities Committee: 01/21/2025
Finance Committee: 01/27/2025
Governing Body: 01/29/2025

d. Request for Approval of a Budget Amendment Resolution (BAR) to Allocate New Mexico Department of Transportation Grant Funding in the Total Amount of $95,000 to FY25 Parks and Open Space Revenue and Operating Budget to Support Litter Control and Beautification Efforts. (Jason T. Sharp, Park Ranger Superintendent; jtsharp@santafenm.gov)

Committee Review:
Public Works & Utilities Committee: 01/21/2025
Finance Committee: 01/27/2025
Governing Body: 01/29/2025

e. Request for Approval of a Construction Contract with Mountain West Golfscapes, Inc. to Repair the Irrigation Supply and Ornamental Ponds at the Marty Sanchez Golf Course and Municipal Recreation Sports Complex for Compliance with a Corrective Action Plan in the Total Amount of $2,213,247.69 Excluding NMGRT for a Three-Year Term. (Scott A. Overlie, PW Project Manager; saoverlie@santafenm.gov)

Committee Review:
Public Works & Utilities Committee: 01/21/2025
Finance Committee: 01/27/2025
Governing Body: 01/29/2025

f. Request for Approval of a Budget Amendment Resolution (BAR) to Transfer Customer River Fund Donations and a Water Fund Match in the Total Amount

of $239,594 to Santa Fe River Fund WIP Construction in Public Works Per Ordinance No. 2013-9 the Voluntary River Conservation Fund. (Zoe Isaacson, River and Watershed Manager; zrisaacson@santafenm.gov)

Committee Review:
Public Works and Utilities Committee: 01/21/2025
Finance Committee: 01/27/2025
Governing Body: 01/29/2025

g. Request for Approval to Accept the New Mexico Department of Transportation Aviation Division Grant SAF-25-03 for the Reconstruction of the Terminal Apron in the Amount of $1,234,923 for a Two-Year Term. (James Harris, Airport Manager, jcharris@santafenm.gov; Kelly Bynon, Administrative Manager; kabynon@santafenm.gov)

1. Request For Approval of a Budget Amendment Resolution (BAR) in the Total Amount of $1,372,167 to Increase WIP Design and WIP Construction using New Mexico Department of Transportation Aviation Division Funding for the Reconstruction of the Terminal Apron.

Committee Review:
Public Works & Utilities Committee: 01/21/2025
Finance Committee: 01/27/2025
Governing Body: 01/29/2025

h. Request for Approval of Goods and Services Contract with Vertosoft, LLC for the Purchase of Asset Management Software and Implementation Services in the Total Amount Not to Exceed $1,913,591.72, Including NMGRT, for a Five-Year Term. (Taylor Jurgens, Engineer; trjurgens@santafenm.gov)

1. Request for Approval of a Budget Amendment Resolution (BAR) Increasing FY25 Public Utilities Admin Software by $257,922 and Decreasing Available Water Budgets in the Total Amount of $146,694 and Wastewater Enterprise Cash Balance by $111,228.

2. Request for Approval of a Budget Amendment Resolution (BAR) Increasing FY25 Public Utilities Admin Software Purchases by $237,707 and Decreasing Public Works Budgets in the Total Amount of $237,707.

Committee Review:
Public Works and Utilities Committee: 01/21/2025
Finance Committee: 01/27/2025
Governing Body: 01/29/2025

i. Request for Approval of New Mexico Environment Department Capital Appropriation Project Agreement in the Total Amount of $400,000 for the

Jemez Road Sewer Line Extension with a Reversion Date of June 30, 2026. (P. Fred Heerbrandt, Wastewater Division Engineering Supervisor; pfheerbrandt@santafenm.gov)

1. Request for Approval of a Budget Amendment Resolution (BAR) in the Total Amount of $400,000 from the Capital Appropriation Grant to FY25 Revenue and Expenses for the Jemez Road Sewer Line Project.

Committee Review:
Public Works and Utilities Committee: 01/21/2025
Finance Committee: 01/27/2025
Governing Body: 01/29/2025

j. Request for Approval of a Budget Amendment Resolution (BAR) in the Total Amount of $200,000 from FY25 Complete Streets One Time Capital and Operating Funds to CIP WIP Construction for the St. Michaels Drive Intersection Improvements. (Jennifer Morrow, Complete Streets Division Director; jlmorrow@santafenm.gov)

Committee Review:
Public Works & Utilities Committee: 01/21/2025
Finance Committee: 01/27/2025
Governing Body: 01/29/2025

k. CONSIDERATION OF RESOLUTION NO. 2025_____. (Councilor Amanda Chavez and Councilor Michael Garcia)
A Resolution Authorizing Representatives and Agents for New Mexico Department of Finance and Administration, Appropriation ID Number I3321, New Mexico Department of Transportation Control Number C5243321, to Acquire Rights of Way for and to Plan, Design, and Construct a Pedestrian Underpass on Saint Michael's Drive. (Regina Wheeler, Public Works Director; rawheeler@santafenm.gov)

Committee Review:
Governing Body (Introduced): 01/15/2025
Public Works and Utilities Committee: 01/21/2025
Finance Committee: 01/27/2025
Governing Body: 01/29/2025

l. CONSIDERATION OF RESOLUTION 2025___. (Mayor Alan Webber)
A Resolution Accepting a Grant from the Que Linda Beautification Program Administered by the New Mexico Department of Transportation; Entering into a Grant Agreement for a Total Amount of $95,000.00, Term Ending June 30, 2025; Identifying the City Manger or City Manager's Designee as the Signatory for the Agreement. (Jason Sharp, Santa Fe Parks Superintendent; jtsharp@santafenm.gov)

Committee Review:

Governing Body (Introduced): 01/15/2025
Public Works and Utilities Committee: 01/21/2025
Finance Committee: 01/27/2025
Governing Body: 01/29/2025

m. CONSIDERATION OF RESOLUTION 2025____. (Councilor Amanda Chavez)
A Resolution Authorizing Representatives and Agents for New Mexico Department of Finance and Administration, Appropriation ID Number G3165, New Mexico Department of Transportation Control Number C5223165, to Plan, Design, Construct, Landscape, and Make Phase I Improvements to Medians on Arterial and Collector Roads for the City of Santa Fe in Santa Fe County. (Regina Wheeler, Public Works Director; rawheeler@santafe.gov)

Committee Review:
Governing Body (Introduced): 01/15/2025
Public Works and Utilities Committee: 01/21/2025
Finance Committee: 01/27/2025
Governing Body: 01/29/2025

8. Action Items: Discussion Agenda
9. Executive Session
10. Matters from Staff
11. Matters from the Committee
12. Matters from the Chair
13. Next Meeting:
14. Adjourn

Persons with disabilities in need of accommodations, contact the City Clerk's office at 955-6521, five (5) working days prior to meeting date.

Regular Meeting of the Public Works and Utilities Committee
January 6, 2025 at 5:00 PM
Council Chambers, City Hall
200 Lincoln Avenue
MINUTES

---

1. Call to Order

The Regular Meeting of the Public Works and Utilities Committee was called to order by Chair Chavez at 5:01 PM, on Monday, January 6, 2025, in the Council Chambers, City Hall, 200 Lincoln Avenue, Santa Fe, New Mexico.

2. Roll Call

MEMBERS PRESENT
Councilor Amanda Chavez (Chair)
Councilor Michael Garcia
Councilor Lee Garcia
Councilor Carol Romero-Wirth
Councilor Alma Castro

MEMBERS EXCUSED

OTHER PARTICIPANTS ATTENDING
Regina Wheeler, Public Works Department Director

3. Approval of Agenda

Approval of Agenda as presented.

4. Approval of Consent Agenda

MOTION A motion was made by Councilor Romero-Wirth, seconded by Councilor Castro, to approve as presented.

VOTE The motion was passed by a roll call vote.

5. Public Comment

6. Presentations

   a. Update on the Asset Management System Being Implemented by Utilities and Public Works Departments. (Taylor Jurgens, Engineer Utilities and Sean Moody, Capital Projects Manager, Public Works)

7. Action Items: Consent Agenda

   a. Request for Approval of the December 2, 2024 Public Works & Utilities

Committee Meeting Minutes. (Xavier Martinez, Administrative Manager; xbmartinez@santafenm.gov)

Committee Review:
Public Works & Utilities Committee: 1/06/2024

MOTION A motion was made by Councilor Romero-Wirth, seconded by Councilor Castro, to approve as presented.

VOTE The motion was passed by a roll call vote.

b. Request for Approval of a Budget Amendment Resolution (BAR) in the Amount of $183,874 from the Water Enterprise Cash Fund to Water WIP Design for Water-Related Engineering Services. (Clinton Peterson, Engineer Associate; cdpeterson@santafenm.gov)

Committee Review:
Public Works and Utilities Committee: 01/06/2025
Finance Committee: 01/13/2025
Governing Body: 01/15/2025

MOTION A motion was made by Councilor Romero-Wirth, seconded by Councilor Castro, to approve as presented.

VOTE The motion was passed by a roll call vote.

c. Request for Approval of a General Services Contract with B&D Industries in the Total Amount of $477,016.30 for Replacement of Heating and Cooling Units at the Southside Library with Term Ending June 30, 2026. (Spencer Schwartz, Public Works Project Manager; smschwartz@santafenm.gov)

Committee Review:
Public Works and Utilities Committee: 01/06/2025
Finance Committee: 01/13/2025
Governing Body: 01/15/2025

MOTION A motion was made by Councilor Romero-Wirth, seconded by Councilor Castro, to approve as presented.

VOTE The motion was passed by a roll call vote.

d. Request for Approval of a General Services Contract with B&D Industries in the Total Amount of $1,000,000 for On-Call Plumbing, Mechanical, and HVAC Services at Genoveva Chavez Community Center through June 30, 2028. (Spencer Schwartz, Public Works Project Manager; smschwartz@santafenm.gov)

Committee Review:
Public Works and Utilities Committee: 01/06/2025

Finance Committee: 01/13/2025
Governing Body: 01/15/2025

MOTION A motion was made by Councilor Romero-Wirth, seconded by Councilor Castro, to approve as presented.

VOTE The motion was passed by a roll call vote.

e. Request for Approval of the State of New Mexico Department of Finance and Administration General Fund 93100 Capital Appropriation Project Grant Agreement 24-I3145 in the Total Amount of $175,000 for Renovations to El Museo Cultural de Santa Fe Facility With a Reversion Date of June 30, 2028. (Tim Farrell, Public Works Property Development Manager; tgfarrell@santafenm.gov)

1. Request for Approval of a Budget Amendment Resolution (BAR) to Allocate $175,000 from the 2024 Capital Appropriation to FY25 Revenue and Expenses for the Santa Fe Railyard.

Committee Review:
Public Works and Utilities Committee: 01/06/2025
Finance Committee: 01/13/2025
Governing Body: 01/15/2025

MOTION A motion was made by Councilor Romero-Wirth, seconded by Councilor Castro, to approve as presented.

VOTE The motion was passed by a roll call vote.

f. Request for Approval of the State of New Mexico Department of Finance and Administration General Fund 93100 Capital Appropriation Project Grant Agreement 24-I4219, in the Total Amount of $126,950 for Renovations to El Museo Cultural de Santa Fe Facility With a Reversion Date of June 30, 2026. (Tim Farrell, Public Works Property Development Manager; tgfarrell@santafenm.gov)

1. Request for Approval of a Budget Amendment Resolution (BAR) to Allocate $126,950 from the 2024 Capital Appropriation to FY25 Revenue and Expenses for the Santa Fe Railyard.

Committee Review:
Public Works and Utilities Committee: 01/06/2025
Finance Committee: 01/13/2025
Governing Body: 01/15/2025

MOTION A motion was made by Councilor Romero-Wirth, seconded by Councilor Castro, to approve as presented.

VOTE The motion was passed by a roll call vote.

g. Request for Approval of a Budget Amendment Resolution (BAR) in the Total Amount of $4,109,145 from the Wastewater Utility Cash Balance to the Repair and Maintenance Expenditures to Fund a Contract with AAC Construction to Bring the Paseo Real Wastewater Reclamation Facility to Compliance from Violations of the Clean Water Act. (Paul F. Heerbrandt, Engineering Supervisor; pfheerbrandt@santafenm.gov)

Committee Review
Public Works and Utilities Committee: 01/06/2025
Finance Committee: 01/13/2025
Governing Body: 01/15/2025

MOTION A motion was made by Councilor Romero-Wirth, seconded by Councilor Castro, to approve as presented.

VOTE The motion was passed by a roll call vote.

h. Request for Approval of Amendment 1 to Legal Services Contract Item #23-0415 with Stein & Brockmann, P.A. to Increase Compensation by $324,562.50 for a New Total Amount of $389,475 and to Extend the Term to June 30, 2027 for Addressing Recent Legal Challenges Related to the Division's Work for the San Juan Chama Return Flow Pipeline Project. (Bill Schneider, Water Resources Coordinator; whschneider@santafenm.gov)

Committee Review:
Public Works and Utilities Committee: 01/06/2025
Finance Committee: 01/13/2025
Governing Body: 01/15/2025

MOTION A motion was made by Councilor Romero-Wirth, seconded by Councilor Castro, to approve as presented.

VOTE The motion was passed by a roll call vote.

i. Request for Approval of a Budget Amendment Resolution (BAR) in the Total Amount of $286,560 to Increase WIP Construction Using Funds Budgeted in Miscellaneous Revenue During FY24. (Kelly Bynon, Administrative Manager, kabynon@santafenm.gov)

Committee Review:
Public Works and Utilities Committee: 01/06/2025
Finance Committee: 01/13/2025
Governing Body: 01/15/2025

MOTION A motion was made by Councilor Romero-Wirth, seconded by Councilor Castro, to approve as presented.

VOTE The motion was passed by a roll call vote.

j. Request for Approval of Construction Contract with Vital Consulting Group LLC in the Total Amount of $7,182,098.05 Including NMGRT to Complete a Two-Phased Demolition and Reconstruction of the Terminal Ramp at the Santa Fe Regional Airport for a Four-Year Term. (Sebastian Gallegos, Project Administrator; sfgallegos@santafenm.gov; James Harris, Airport Manager; jcharris@santafenm.gov)

Committee Review
Public Works and Utilities: 01/06/2025
Finance Committee: 01/13/2025
Governing Body: 01/15/2025

MOTION A motion was made by Councilor Romero-Wirth, seconded by Councilor Castro, to approve as presented.

VOTE The motion was passed by a roll call vote.

k. Request for Approval of the State of New Mexico Department of Finance and Administration Capital Appropriation Project Grant Agreement 24-I3144 in the Total Amount of $100,000 for the Railyard Performance Center Facility Improvements with a Reversion Date of June 30, 2028. (Tim Farrell, Public Works Property Development Manager; tgfarrell@santafenm.gov).

1. Request for Approval of a Budget Amendment Resolution (BAR) to Allocate $100,000 from the 2024 Capital Appropriation to FY25 Revenue and Expenses for the Santa Fe Railyard.

Committee Review:
Public Works and Utilities Committee: 01/06/2025
Finance Committee: 01/13/2025
Governing Body: 01/15/2025

MOTION A motion was made by Councilor Romero-Wirth, seconded by Councilor Castro, to approve as presented.

VOTE The motion was passed by a roll call vote.

l. Request for Approval of a State of New Mexico Department of Finance and Administration General Fund 93100 Capital Appropriation Project Agreement for $250,000 to Purchase and Install Self-Contained Breathing Apparatus (SCBA) for the Fire Department with a Reversion Date of June 30, 2026. (Sten Johnson, Assistant Fire Chief; sajohnson@santafenm.gov)

1. Request for Approval of a Budget Amendment Resolution (BAR) in the Total Amount of $250,000 from the DFA Grant into FY25 Fire Department Revenue and Safety Equipment Expenses.

Committee Review:
Public Works & Utilities Committee: 01/06/2025
Finance Committee: 01/13/2025
Governing Body: 01/15/2025

MOTION A motion was made by Councilor Romero-Wirth, seconded by Councilor Castro, to approve as presented.

VOTE The motion was passed by a roll call vote.

m. Request for Approval of a Wheeling Rate Agreement with Santa Fe County for Water "Wheeled" through the City's Water Transmission and Distribution Network to Reach the County Utility System. (Jesse Roach, Water Division Director; jdroach@santafenm.gov)

Committee Review:
Public Works and Utilities Committee: 01/06/2025
Finance Committee: 01/13/2025
Governing Body: 01/15/2025

MOTION A motion was made by Councilor Romero-Wirth, seconded by Councilor Castro, to approve as presented.

VOTE The motion was passed by a roll call vote.

n. CONSIDERATION OF RESOLUTION NO. 2025-___. (Mayor Alan Webber) A Resolution Adopting Annual Open Meetings Act Notice Requirements for 2025. (Andréa Salazar, City Clerk; asalazar@santafenm.gov)

Committee Review:
Governing Body (Introduced): 12/11/2024
Public Works and Utilities Committee: 01/06/2025
Quality of Life Committee: 01/08/2025
Finance Committee: 01/13/2025
Governing Body: 01/15/2025

MOTION A motion was made by Councilor Romero-Wirth, seconded by Councilor Castro, to approve as presented.

VOTE The motion was passed by a roll call vote.

8. Action Items: Discussion Agenda

9. Executive Session

10. Matters from Staff

11. Matters from the Committee

12. Matters from the Chair

13. Next Meeting:

Next Public Works and Utilities Committee Meeting: January 21, 2025

14. Adjourn

The Public Works and Utilities Committee Meeting was Adjourned at 5:35PM.

Committee Liaison Chair

CITY OF SANTA FE

Date: November 14, 2024

To: Governing Body

Via: Regina Wheeler
Regina Wheeler (Nov 18, 2024 12:18 MST)
Regina Wheeler, Public Works Department Director

From: Romella Glorioso-Moss, PhD, CPM, AICP

Subject: Construction of Tierra Contenta Trail Extension – Phase A

Vendor Name: GM Emulsion

Vendor Number: 3882

ACTION:
Approval of a Construction Contract With GM Emulsion, LLC in the Total Amount of $ 1,111,917 Excluding NMGRT for the Construction of S100770 Tierra Contenta Trail Extension – Phase A. (Romella Glorioso-Moss, Complete Streets Capital Project Manager; rsglorioso-moss@santafenm.gov)

BACKGROUND AND SUMMARY:
The bid for construction of Tierra Contenta Trail Extension from Buffalo Grass to South Meadows – Phase A was released on September 3, 2024 via ITB# 24090. There were five responsive bidders of which GM Emulsion, LLC was the lowest responsive bidder. A recommendation letter to award the contract to GM Emulsion was approved by NMDOT on September 24, 2024 as required by the grant funding for the project.

GM Emulsion's Scope of Work includes the construction of a 10'-wide concrete multiuse trail from the existing Arroyo Chamisos Trail at Tierra Contenta to South Meadows Road. The construction funding of $1.3M is secured from the Transportation Alternative Program – a federally program administered by the NMDOT. Construction could start as soon as the contract is approved and is expected to last for six months depending on the weather.

ATTACHMENTS:

Construction Contract
Santa Fe Business License
Certificate of Liability Insurance
Letter of Recommendation to Award
Notice of Award

PROCUREMENT METHOD:
The procurement method is via ITB# 24090.

Chief Procurement Officer Approval: _____ **Date:** Nov 22, 2024
Comment/Exceptions: _____

Supporting Information:

CONTRACT NUMBER:
The FY25 Munis contract number is 3250301
The FY25 Project ledger number is GO18355BV.

$$$$$ SOURCE/REVENUE: ☒Expense ☐Revenue

The funding source is: NM Department of Transportation D19937
Fund Name/Number: Parks & Trails / 355
Munis Org Name/Number: Parks & Trails /3559980
Munis Object Name/Number: WIP Construction/572970

If the project is grant funded? List grant award number: D19937

Grant Manager / Accounting Officer Approval: Matthew Bonifer Matthew Bonifer (Nov 22, 2024 10:45 MST) **Date:** Nov 22, 2024
Comment/Exceptions: _____

Project Ledger #: GO18355BV

Budget Officer Approval: Andy Hopkins **Date:** Nov 20, 2024
Comment/Exceptions: _____

CAPITAL ASSET (will this procurement result in a tangible item that costs more than $5,000?):

☒Yes | ☐ No

 # (if known): _____

Repair or Replacement of Existing Equipment:

☐Yes | ☒ No
If yes -> ☐Repair | ☐ Replacement

Please explain: _____

Capital Project:
(New and improvement projects that are going to cost $10,000 or more)
☒ Yes | ☐ No

Project Ledger #: GO18355BV

Anticipated length of project: 6 months

Asset Manager Approval: _____ **Date:** _____
Comment/Exceptions: _____

Department Approvals:
IT Components: ☐ **Yes** | ☒ **No**
Vehicles: ☐ **Yes** | ☒ **No**
Facilities, Furniture, Fixtures, Equipment: ☐ **Yes** | ☒ **No**

Approval: _____ **Title:** _____ **Date**: _____
Approval: _____ **Title:** _____ **Date**: _____
Comment & Exceptions: _____

Department Contract Administrator Contact Info:
Amanda Archuleta, ajarchuleta@santafenm.gov, 505-955-6631

Halona Crowe
_____
Reviewed by Halona Crowe

Item #: _____
Munis Contract #: _____
ITB #: 24090

CITY OF SANTA FE

CONSTRUCTION CONTRACT

THIS CONTRACT is made and entered into by and between the City of Santa Fe, New Mexico, hereinafter referred to as the "City," and **GM Emulsion, LLC.,** hereinafter referred to as the "Contractor," and is effective as of the date set forth below upon which it is executed by the Parties.

RECITALS

WHEREAS, the City, through its Governing Body, is authorized to enter into a construction Contract for the project; and

WHEREAS, the City has procured this Contract according to the established State and Local Purchasing procedures for contracts of the type and amount; and

The City and the Contractor hereby agree as follows:

1. Scope of Work

A. The Contractor shall perform the following work:

The Contractor shall perform all the work required by the Contract Documents for S100770 CIP474A Tierra Contenta Trail Extension from Buffalo Grass to South Meadows. (Bid Number 24090).

The work designated as S100770 Tierra Contenta Trail Extension Project Phase A consists of but is not limited to the construction of a 10'-wide concrete multi-use trail from the existing Arroyo Chamisos Trail at Tiera Contenta to South Meadows Road as described in the Contract Documents.

The Contractor shall be responsible for verifications of all conditions, measurements, and dimensions for bidding.

The Contractor shall be responsible for all permits, fees, and State inspections associated with the construction.

B. Project: S100770 CIP474A Tierra Contenta Trail Extension

C. City Department: Public Works

D. Distribution:

City	Romella Glorioso-Moss, Complete Streets Capital Projects Manager
Contractor	Gabriel Martinez, GM Emulsion, LLC.
Engineers	Eric Cornelius, PE, Santa Fe Engineering, LLC.

2. Compensation

A. The City shall pay to the Contractor in full payment for services satisfactorily performed **One Million One Hundred Eleven Thousand Nine Hundred Seventeen Dollars** (1,111,917.00) based upon deliverables for progress payments, such compensation not to exceed (1,111,917.00), excluding gross receipts tax. The New Mexico gross receipts tax levied on the amounts payable under this Contract shall be paid by the City to the Contractor, as follows:

The Unit Bid Contract Total is determined as follows:

Base Bid	$ 1,111,917.00
Gross Receipts Tax (8.1875%)	$ 91,038.20
Base Bid plus NMGRT	$ 1,202,955.20

The total amount payable to the Contractor under this Contract, including Alternates (if needed) gross receipts tax and expenses, shall not exceed $1,202,955.20. This amount is a maximum and not a guarantee that the work assigned to be performed by Contractor under this Contract shall equal the amount stated herein. The parties do not intend for the Contractor to continue to provide services without compensation when the total compensation amount is reached. Contractor is responsible for notifying the City when the services provided under this Contract reach the total compensation amount. In no event will the Contractor be paid for services provided in excess of the total compensation amount without this Contract being amended in writing prior to those services in excess of the total compensation amount being provided.

B. Payment is subject to availability of funds pursuant to the Appropriations Paragraph set forth below and to any negotiations between the parties from year to year pursuant to Paragraph 1, Scope of Work, and to approval by the City. All invoices MUST BE received by the City no later than thirty 30) days after the termination of the Fiscal Year in which the services were delivered. Invoices received after such date WILL NOT BE PAID.

C. Contractor must submit a detailed statement accounting for all services performed and expenses incurred. If the City finds that the services are not acceptable, within thirty days after the date of receipt of written notice from the Contractor that payment is requested, it shall provide the Contractor a letter of exception explaining the defect or objection to the services, and outlining steps the Contractor may take to provide remedial action. Upon certification by the City that the services have been received and accepted, payment shall be tendered to the Contractor within twenty-one days after the date of acceptance. If payment is made by mail, the payment shall be deemed tendered on the date it is postmarked. .

D. If the City fails to pay the contractor within twenty-one days after receipt of an undisputed request for payment, the City shall pay interest to the contractor beginning on the twenty-second day after payment was due, computed at one and one-half percent of the undisputed amount per month or fraction of a month until the payment is issued. If the City receives an improperly completed invoice, the City shall notify the sender of the invoice within seven days of receipt in what way the invoice is improperly completed, and

the owner has no further duty to pay on the improperly completed invoice until it is resubmitted as complete.

E. **Notice of Extended Payment Provision for Grant Funded Contracts**. This contract allows the City to make payment within 45 days after submission of an undisputed request for payment for contracts funded by grant money consistent with NMSA 1978, sec. 57-28-5(B).

3. Term

THIS CONTRACT SHALL NOT BECOME EFFECTIVE UNTIL APPROVED IN WRITING BY THE CITY. This contract shall terminate **two (2) years from date of final signature**. The City reserves the right to renew this contract on an annual basis by mutual agreement not to exceed a total of ten (10) years in accordance with NMSA 1978, Sections 13-1-150 through 152.

4. Termination

A. Grounds. The City may terminate this Contract for convenience or cause. For contracts within their authority, the City Manager or their designee is authorized to provide the notice of termination, otherwise such notice of termination shall be provided by the Mayor or their designee as authorized by the Governing Body. The Contractor may only terminate this Contract based upon the City's uncured, material breach of this Contract.

B. Notice; City Opportunity to Cure.

1) Except as otherwise provided in Paragraphs 7.A and 17, the City shall give Contractor written notice of termination at least thirty (30) days prior to the intended date of termination.

2) Contractor shall give City written notice of termination at least thirty (30) days prior to the intended date of termination, which notice shall (i) identify all the City's material breaches of this Contract upon which the termination is based and (ii) state what the City must do to cure such material breaches. Contractor's notice of termination shall only be effective (i) if the City does not cure all material breaches within the thirty (30) day notice period or (ii) in the case of material breaches that cannot be cured within thirty (30) days, the City does not, within the thirty (30) day notice period, notify the Contractor of its intent to cure and begin with due diligence to cure the material breach.

3) Notwithstanding the foregoing, this Contract may be terminated immediately upon written notice to the Contractor (i) if the Contractor becomes unable to perform the services contracted for, as determined by the City; (ii) if, during the term of this Contract, the Contractor is suspended or debarred by the City; or (iii) the Contract is terminated pursuant to Paragraph 5, "Appropriations," of this Contract.

C. Liability. Except as otherwise expressly allowed or provided under this Contract, the City's sole liability upon termination shall be to pay for acceptable work performed prior to the Contractor's receipt or issuance of a notice of termination; provided, however, that a notice of termination shall not nullify or otherwise affect either party's liability for pre-termination defaults under or breaches of this Contract. The Contractor shall submit an invoice for such work within thirty (30) days of receiving or sending the notice of termination. *THIS PROVISION IS NOT EXCLUSIVE AND DOES NOT WAIVE THE CITY'S OTHER LEGAL RIGHTS AND REMEDIES CAUSED BY THE CONTRACTOR'S DEFAULT/BREACH OF THIS CONTRACT.*

5. Appropriations

The terms of this Contract are contingent upon sufficient appropriations and authorization being made by the Governing Body for the performance of this Contract. If sufficient appropriations and authorization are not

made by the Governing Body, this Contract shall terminate immediately upon written notice being given by the City to the Contractor. The City's decision as to whether sufficient appropriations are available shall be accepted by the Contractor and shall be final. If the City proposes an amendment to the Contract to unilaterally reduce funding, the Contractor shall have the option to terminate the Contract or to agree to the reduced funding, within thirty (30) days of receipt of the proposed amendment.

6. Status of Contractor

The Contractor and its agents and employees are independent contractors performing construction services for the City and are not employees of the City. The Contractor and its agents and employees shall not accrue leave, retirement, insurance, bonding, use of City vehicles, or any other benefits afforded to employees of the City as a result of this Contract. The Contractor acknowledges that all sums received hereunder are reportable by the Contractor for tax purposes, including without limitation, self-employment and business income tax. The Contractor agrees not to purport to bind the City unless the Contractor has express written authority to do so, and then only within the strict limits of that authority.

7. Construction Contract Performance and Payment Bond

A. When a construction contract is awarded in excess of twenty-five thousand dollars ($25,000), the following bonds or security shall be delivered to the City and shall become binding on the parties upon the execution of the contract. If the Contractor fails to deliver the required performance and payment bonds, the Contractor's bid shall be rejected, its bid security shall be enforced to the extent of actual damages. Award of the contract shall be made pursuant to the Procurement Code in the following manner:

(1) a performance bond satisfactory to the City, executed by a surety company authorized to do business in this state and said surety to be approved in federal circular 570 as published by the United States treasury department or the state board of finance or the local governing authority, in an amount equal to one hundred percent of the price specified in the contract; and

(2) a payment bond satisfactory to the City, executed by a surety company authorized to do business in this state and said surety to be approved in federal circular 570 as published by the United States treasury department or the state board of finance or the local governing authority, in an amount equal to one hundred percent of the price specified in the contract, for the protection of all persons supplying labor and material to the contractor or its subcontractors for the performance of the work provided for in the contract.

B. A subcontractor shall provide a performance and payment bond on a public works building project if the subcontractor's contract for work to be performed on a project is one hundred twenty-five thousand dollars ($125,000) or more.

8. Assignment

The Contractor shall not assign or transfer any interest in this Contract or assign any claims for money due or to become due under this Contract without the prior written approval of the City.

9. Subcontracting

The Contractor shall not subcontract any portion of the services to be performed under this Contract without the prior written approval of the City. No such subcontract shall relieve the primary Contractor from its obligations and liabilities under this Contract, nor shall any subcontract obligate direct payment from the City.

10. Release

Final payment of the amounts due under this Contract shall operate as a release of the City, its officers and employees from all liabilities, claims and obligations whatsoever arising from or under this Contract.

11. Confidentiality

Any confidential information provided to or developed by the Contractor in the performance of this Contract shall be kept confidential and shall not be made available to any individual or organization by the Contractor without the prior written approval of the City.

12. Product of Service -- Copyright

All materials developed or acquired by the Contractor under this Contract shall become the property of the City and shall be delivered to the City no later than the termination date of this Contract. Nothing developed or produced, in whole or in part, by the Contractor under this Contract shall be the subject of an application for copyright or other claim of ownership by or on behalf of the Contractor.

13. Conflict of Interest; Governmental Conduct Act

A. The Contractor represents and warrants that it presently has no interest and, during the term of this Contract, shall not acquire any interest, direct or indirect, which would conflict in any manner or degree with the performance or services required under the Contract.

B. The Contractor further represents and warrants that it has complied with, and, during the term of this Contract, will continue to comply with, and that this Contract complies with all applicable provisions of the Governmental Conduct Act, Chapter 10, Article 16 NMSA 1978.

C. Contractor's representations and warranties in Paragraphs A and B of this Article 12 are material representations of fact upon which the City relied when this Contract was entered into by the parties. Contractor shall provide immediate written notice to the City if, at any time during the term of this Contract, Contractor learns that Contractor's representations and warranties in Paragraphs A and B of this Article 12 were erroneous on the effective date of this Contract or have become erroneous by reason of new or changed circumstances. If it is later determined that Contractor's representations and warranties in Paragraphs A and B of this Article 12 were erroneous on the effective date of this Contract or have become erroneous by reason of new or changed circumstances, in addition to other remedies available to the City and notwithstanding anything in the Contract to the contrary, the City may immediately terminate the Contract.

D. All terms defined in the Governmental Conduct Act have the same meaning in this section.

14. Amendment

A. This Contract shall not be altered, changed or amended except by instrument in writing executed by the parties hereto and all other required signatories.

B. If the City proposes an amendment to the Contract to unilaterally reduce funding due to budget or other considerations, the Contractor shall, within thirty (30) days of receipt of the proposed Amendment, have the option to terminate the Contract, pursuant to the termination provisions as set forth in Article 4 herein, or to agree to the reduced funding.

15. Change Orders

A. Changes. The Contractor may only make changes or revisions within the Scope of Work as defined by Article 1 and/or Exhibit 1 after receipt of written approval by the City Manager or his/her designee. Such change may only be made to Tasks or Sub-Task as defined in the Scope of Work. Under no circumstance shall such change affect the:

1) Deliverable requirements, as outlined in the Scope of Work;
2) Due date of any Deliverable, as outlined in the Scope of Work;
3) Compensation of any Deliverable, as outlined in the Scope of Work;
4) Contract compensation, as outlined in Article 2; or
5) Contract termination, as outlined in Article 4.

B. Change Request Process. In the event that circumstances warrant a change to accomplish the Scope of Work as described above, a Change Request shall be submitted that meets the following criteria:

1) The Project Manager shall draft a written Change Request for review and approval by the City Manager to include:
   (a) the name of the person requesting the change;
   (b) a summary of the required change;
   (c) the start date for the change;
   (d) the reason and necessity for change;
   (e) the elements to be altered; and
   (f) the impact of the change.

2. The City Manager shall provide a written decision on the Change Request to the Contractor within a maximum of ten (10) Business Days of receipt of the Change Request. All decisions made by the City Manager are final. Change Requests, once approved, become a part of the Contract, and become binding as a part of the original Contract.

16. Merger

This Contract incorporates all the agreements, covenants, and understandings between the parties hereto concerning the subject matter hereof, and all such covenants, agreements and understandings have been merged into this written contract.

All terms and conditions of the ITB#24090 Construction of Tierra Contenta Trail Extension Phase A and the Contractor's response to such document(s) are incorporated herein by reference and is included in the order of precedence.

No prior Agreement or understanding, oral or otherwise, of the parties or their agents shall be valid or enforceable unless embodied in this Contract.

17. Penalties for violation of law

NMSA 1978, sections 13-1-28 through 13-1-199, imposes civil and criminal penalties for its violation. In addition, the New Mexico criminal statutes impose felony penalties for illegal bribes, gratuities and kickbacks.

18. Equal Opportunity Compliance

The Contractor agrees to abide by all federal and state laws and rules and regulations, and Santa Fe City Code, pertaining to equal employment opportunity. In accordance with all such laws of the State of New Mexico, the Contractor assures that no person in the United States shall, on the grounds of race, religion, color, national origin, ancestry, sex, age, physical or mental handicap, or serious medical condition, spousal affiliation, sexual orientation or gender identity, be excluded from employment with or participation in, be denied the benefits of, or be otherwise subjected to discrimination under any program or activity performed under this Contract. If Contractor is found not to be in compliance with these requirements during the life of this Contract, Contractor agrees to take appropriate steps to correct these deficiencies.

19. Applicable Law

The laws of the State of New Mexico shall govern this Contract, without giving effect to its choice of law provisions. Venue shall be proper only in a New Mexico court of competent jurisdiction in accordance with NMSA 1978, section 38-3-2. By execution of this Contract, Contractor acknowledges and agrees to the jurisdiction of the courts of the State of New Mexico over any and all lawsuits arising under or out of any term of this Contract.

20. Workers Compensation

The Contractor agrees to comply with state laws and rules applicable to workers compensation benefits for its employees. If the Contractor fails to comply with the Workers Compensation Act and applicable rules when required to do so, this Contract may be terminated by the City.

21. Other Insurance

If the services contemplated under this Contract will be performed on or in City facilities or property, Contractor shall maintain in force during the entire term of this Contract, the following insurance coverage(s), naming the City as additional insured.

A. **Commercial General Liability** insurance shall be written on an occurrence basis and be a broad as ISO Form CG 00 01 with limits not less than $2,000,000 per occurrence and $2,000,000 in the aggregate for claims against bodily injury, personal and advertising injury, and property damage. Said policy shall include broad form Contractual Liability coverage and be endorsed to name the City of Santa Fe their officials, officers, employees, and agents as additional insureds.

B. **Business Automobile Liability** insurance for all owned, non-owned automobiles, with a combined single limit not less than $1,000,000 per accident.

C. **Broader Coverage and Limits**. The insurance requirements under this Contract shall be the greater of (1) the minimum coverage and limits specified in this Contract, or (2) the broader coverage and maximum limits of coverage of any insurance policy or proceeds available to the Named Insured. It is agreed that these insurance requirements shall not in any way act to reduce coverage that is broader or that includes higher limits than the minimums required herein. No representation is made that the minimum insurance requirements of this Contract are sufficient to cover the obligations of Contractor hereunder.

D. Contractor shall maintain the above insurance for the term of this Contract and name the City as an additional insured and provide for 30 days cancellation notice on any Certificate of Insurance form furnished by Contractor. Such certificate shall also specifically state the coverage provided under the policy is primary over any other valid and collectible insurance and provide a waiver of subrogation.

22. Records and Financial Audit

The Contractor shall maintain detailed time and expenditure records that indicate the date; time, nature and cost of services rendered during the Contract's term and effect and retain them for a period of three (3) years from the date of final payment under this Contract. The records shall be subject to inspection by the City. The City shall have the right to audit billings both before and after payment. Payment under this Contract shall not foreclose the right of the City to recover excessive or illegal payments

23. Indemnification

The Contractor shall defend, indemnify and hold harmless the City from all actions, proceeding, claims, demands, costs, damages, attorneys' fees and all other liabilities and expenses of any kind from any source which may arise out of the performance of this Contract, caused by the negligent act or failure to act of the Contractor, its officers, employees, servants, subcontractors or agents, or if caused by the actions of any client of the Contractor resulting in injury or damage to persons or property during the time when the Contractor or any officer, agent, employee, servant or subcontractor thereof has or is performing services pursuant to this Contract. In the event that any action, suit or proceeding related to the services performed by the Contractor or any officer, agent, employee, servant or subcontractor under this Contract is brought against the Contractor, the Contractor shall, as soon as practicable but no later than two (2) days after it receives notice thereof, notify the legal counsel of the City.

24. New Mexico Tort Claims Act

Any liability incurred by the City of Santa Fe in connection with this Contract is subject to the immunities and limitations of the New Mexico Tort Claims Act, Section 41-4-1, et. seq. NMSA 1978, as amended. The City and its "public employees" as defined in the New Mexico Tort Claims Act, do not waive sovereign immunity, do not waive any defense and do not waive any limitation of liability pursuant to law. No provision in this Contract modifies or waives any provision of the New Mexico Tort Claims Act.

25. Invalid Term or Condition

If any term or condition of this Contract shall be held invalid or unenforceable, the remainder of this Contract shall not be affected and shall be valid and enforceable.

26. Enforcement of Contract

A party's failure to require strict performance of any provision of this Contract shall not waive or diminish that party's right thereafter to demand strict compliance with that or any other provision. No waiver by a party of any of its rights under this Contract shall be effective unless express and in writing, and no effective waiver by a party of any of its rights shall be effective to waive any other rights.

27. Notices

Any notice required to be given to either party by this Contract shall be in writing and shall be delivered in person, by courier service or by U.S. mail, either first class or certified, return receipt requested, postage prepaid, as follows:

To the City: Regina Wheeler, Public Works Department, City of Santa Fe, P.O. Box 909, Santa Fe, NM 87504-0909, rawheeler@santafenm.gov.

To the Contractor: Gabriel Martinez, GM Emulsion, LLC., 3935 Agua Fria Street, Santa Fe, NM 87507, gabriel@gmemulson.com.

28. Authority

If Contractor is other than a natural person, the individual(s) signing this Contract on behalf of Contractor represents and warrants that he or she has the power and authority to bind Contractor, and that no further action, resolution, or approval from Contractor is necessary to enter into a binding contract.

29. Progress Payments

Based upon Application for Payment submitted to the City by the Contractor and Certificates for Payment issued by the City, the City shall make progress payments on account of the Contract sum to the Contractor as provided in the Contract documents for the period ending the last day of the month as follows:

Not later than twenty-one (21) days following the end of the period covered by the Application for Payment, one hundred percent (100%) of the portion of the Contract Sum properly allocable to labor, materials, and equipment incorporated in the work and one hundred percent (100%) of the portion of the Contract sum properly allocable to materials and equipment suitably stored at the site or some other location agreed upon in writing for the period covered by the Application for Payment, less the aggregate of previous payments made by the City; and upon substantial completion of the entire work, a sum sufficient to increase the total payments to one hundred percent (100%) of the Contract sum, less such amounts as the City shall determine for all incomplete work and unsettled claims as provided in the Contract documents.

30. Liquidated Damages

Should the Contractor neglect, refuse, or otherwise fail to complete the work within the Contract Time for Physical Completion or any extension in the Contract thereof, the Contractor agrees to pay the City the amount specified in section 108.8 Liquidated Damages in the 2014 Edition (NMDOT SSHBC), per consecutive calendar day that passes until Physical Completion and acceptance or until voided pursuant to the provisions of the General Conditions of the Contract, not as a penalty, but as liquidated damages for such breach of the Contract.

31. Final Payment

Final payment, constituting the entire unpaid balance of the Contract sum, unless it is a disputed payment, shall be paid by the City to the Contractor within twenty-one (21) calendar days, after all deficiencies to the Contract document that were noted during the Substantial Completion Inspection and listed on the attachment to the Certificate of Substantial Completion have been corrected, and provided the Contract has been fully performed and a final Certificate for Payment has been issued by the City. In addition, the Contractor shall provide to the City a certified statement of Release of Lien (AIA Document G706A or approved form), Consent of Surety, Warranty from Prime Contractor, Warranties from Suppliers and Manufacturers, training sessions, equipment/operating manuals, and as-built drawings.

32. Schedule

The Contractor shall, within five (5) days after the effective date of Notice to Proceed, prepare and submit a progress schedule covering project operations for the 30-day Contract period. This progress schedule shall be of the type generally referred to as a Critical Path Method (CPM), Critical Path Schedule (CPS), and Critical Path

Analysis (CPA), and other similar designations. The CPM shall be used to control the timing and sequences of the project. All work shall be done in accordance with the CPM Planning and Scheduling. A written statement of explanation shall be submitted with the progress schedule. All costs incurred by the contractor to implement the CPM shall be borne by the Contractor and are part of their Contract.

33. General and Special Provisions

A. Terms used in this Contract which are defined in the Conditions of the Contract shall have the meanings designated in those Conditions.

B. An enumeration of the Contractor's General Comprehensive Liability Insurance requirements appears in the General Conditions of the Contract for construction. Insurance requirements are also described in the Instructions to the Bidder section of the Project Manual. Contractor shall maintain adequate insurance in at least the maximum amounts, which the City could be liable under the New Mexico Tort Claims Act and shall provide proof of such insurance coverage to the City. It is the sole responsibility of the Contractor to comply with the law.

C. This Contract shall not become effective until: (1) approved by the Governing Body; and (2) signed by all parties required to sign this Contract.

D. The Contractor shall maintain detailed time records which indicate the date, time and nature of services rendered. These records shall be subject to inspection by the City, the Department of Finance and Administration and the State Auditor. The City shall have the right to audit billings both before and after payment. Payment under this Contract shall not foreclose the right of the City to recover excessive illegal payments.

E. The Contractor warrants that the Contractor presently has no interest and shall not acquire any interest, direct or indirect, which would conflict in any manner or degree with the performance or services required under this Contract.

F. The Contractor hereby warrants that the Contractor complies with the Americans with Disabilities Act, 29 CFR 1630.

G. Gender, Singular/Plural. Words of any gender used in this Contract shall be held and construed to include any other gender, and words in the singular number shall be held to include the plural, unless the context otherwise requires.

H. Captions and Section Headings. The captions and section headings contained in this Contract are for convenience of reference only, and in no way limit, define, or enlarge the terms, scope, and conditions of this Contract.

I. Certificates and Documents Incorporated. All certificates and documentation required by the provisions of the Contract shall be attached to this Contract at the time of execution and are hereby incorporated by reference as though set forth in full in this Contract to the extent they are consistent with its conditions and terms.

J. Separability. If any clause or provision of this Contract is illegal, invalid or unenforceable under present or future laws effective during the term of this Contract, then and in that event, it is the intention of the parties hereto that the remainder of this Contract shall not be affected thereby.

K. Words and Phrases. Words, phrases, and abbreviations, which have well-known technical or trade meanings used in the Contract documents shall be used according to such recognized meaning. In the event of a conflict, the more stringent meaning shall govern.

L. Relationship of Contract Documents. The Contract Documents are complementary, and any requirement of one Contract Document shall be as binding as if required by all.

M. Pursuant to NMSA 1978, section 13-1-191, reference is hereby made to the Criminal Laws of New Mexico (including NMSA 1978, sections 30-14-1, 30-24-2, and 30-41-1 through 30-41-3) which prohibit bribes, kickbacks, and gratuities, violation of which constitutes a felony. Further, the Procurement Code (NMSA 1978, sections 13-1-28 through 13-1-199) imposes civil and criminal penalties for its violation.

N. Pursuant to NMSA 1978, section 13-4-11. Reference is hereby made to the Minimum Wage on Public Works; weekly payments; posting wage scale; withholding funds.

IN WITNESS WHEREOF, the Parties have executed this Contract as of the date of the signature by the required approval authorities below.

CITY OF SANTA FE:

ALAN WEBBER, MAYOR

DATE: _____

CONTRACTOR:
GM Emulsion, LLC

Gabriel Martinez
Gabriel Martinez (Nov 5, 2024 09:01 MST)

GABRIEL MARTINEZ, OWNER

DATE: Nov 5, 2024

NMBTIN#: 271902307

ATTEST:

GERALYN CARDENAS, INTERIM CITY CLERK

CITY ATTORNEY'S OFFICE:

Kevin L. Nault
Kevin L. Nault (Nov 5, 2024 10:03 MST)

ASSISTANT CITY ATTORNEY

APPROVED FOR FINANCES:

Emily K. Oster

EMILY OSTER, FINANCE DIRECTOR

Santa Fe Engineering Consultants, LLC
SFEC
Civil and Traffic Engineering
Construction Management
Land Development
1599 St Francis Drive, Suite B
Santa Fe, N. M. 87505
(505) 982-2845 Fax (505) 982-2641

September 20, 2024

Ms, Romella Glorioso-Moss,
Senior Project Manager
City of Santa Fe,
737 Agua Fria Street,
Santa Fe, NM 87501

RE: TC TRAIL EXTENTION FROM BUFFALO GRASS TO SOUTH MEADOWS- PHASE A CIP#474A-ITB 24090 LETTER OF BID REWARD RECOMMENDATION.

Dear Ms, Romella Glorioso-Moss,

On September 3, 2024, bids were opened for the above referenced project. The detailed bid sheets were provided to Santa Fe Engineering Consultants LLC for analysis on September 11, 2024. There were five responsive bidders. The bids have been reviewed and tabulated. The bid tabulation is attached. There were no math errors in the contractor bids. The apparent low bidder was GM Emulsion, LLC.

Based on the above analysis, it is recommended that GM Emulsion, LLC. be awarded the contract for the above referenced project.

If you have any questions or desire additional information, please do not hesitate to contact me.

Sincerely,

Eric Cornelius, P.E., C.F.M.
Santa Fe Engineering Consultants, LLC
1599 S. St. Francis Dr., Suite B
Santa Fe, NM 87505

Katrina A. Quintana

NMDOT Concurrence
Katrina Quintana
T/LPA Region Coordinator
North Region Design

CITY OF SANTA FE
TC TRAIL EXTENTION PHASE A CIP#474A-ITB 24090
BID TABULATIONS
9/20/2024

			ENGINEER'S ESTIMATE (2023 PRICING)				GM EMULSION, LLC			JDR AND ASSOCIATES, LLC			MERIDIAN CONTRACTING, INC			STAR PAVIN	
ITEM NO.	NMDOT NO.	DESCRIPTION	UNIT	APPROX. QTY.	UNIT PRICE	EST. PRICE	UNIT PRICE	EST. PRICE	% OF ENGINEER ESTIMATE	UNIT PRICE	EST. PRICE	% OF ENGINEER ESTIMATE	UNIT PRICE	EST. PRICE	% OF ENGINEER ESTIMATE	UNIT PRICE	EST. PRI
1	201000	CLEARING AND GRUBBING	LS	1	$11,845.00	$11,845.00	$20,000.00	$20,000.00	169%	$20,000.00	$20,000.00	169%	$55,000.00	$55,000.00	464%	$10,000.00	$10,00
2	203000	UNCLASSIFIED EXCAVATION	CY	651	$17.51	$11,399.01	$20.00	$13,020.00	114%	$12.00	$7,812.00	69%	$35.00	$22,785.00	200%	$40.00	$26,04
3	203100	BORROW	CY	345	$37.08	$12,792.60	$25.00	$8,625.00	67%	$45.00	$15,525.00	121%	$35.00	$12,075.00	94%	$60.00	$20,70
4	207000	SUBGRADE PREPARATION	SY	712	$5.15	$3,666.80	$4.00	$2,848.00	78%	$6.00	$4,272.00	117%	$8.00	$5,696.00	155%	$8.00	$5,69
5	303160	BASECOURSE- 6"	SY	593	$17.51	$10,383.43	$18.00	$10,674.00	103%	$25.00	$14,825.00	143%	$70.00	$41,510.00	400%	$12.00	$7,11
6	417000	MISC. PAVING	SY	9	$59.74	$537.66	$165.00	$1,485.00	276%	$150.00	$1,350.00	251%	$850.00	$7,650.00	1423%	$200.00	$1,80
7	511030	STRUCTURAL CONCRETE, CLASS AA	CY	53	$1,125.79	$59,666.87	$1,760.00	$93,280.00	156%	$1,800.00	$95,400.00	160%	$2,800.00	$148,400.00	249%	$2,700.00	$143,10
8	540060	REINFORCING BARS, GRADE 60	LBS	2,955	$4.12	$12,174.60	$3.00	$8,865.00	73%	$3.00	$8,865.00	73%	$6.00	$17,730.00	146%	$4.00	$11,82
9	570018	18" CULVERT PIPE	LF	97	$148.32	$14,387.04	$110.00	$10,670.00	74%	$142.00	$13,774.00	96%	$330.00	$32,010.00	222%	$170.00	$16,49
10	570429	18" CULVERT PIPE END SECTION	EA	10	$947.60	$9,476.00	$500.00	$5,000.00	53%	$740.00	$7,400.00	78%	$850.00	$8,500.00	90%	$900.00	$9,00
11	570024	24" CULVERT PIPE	LF	35	$177.16	$6,200.60	$135.00	$4,725.00	76%	$190.00	$6,650.00	107%	$360.00	$12,600.00	203%	$200.00	$7,00
12	570025	24" CULVERT PIPE END SECTION	EA	4	$1,481.14	$5,924.56	$750.00	$3,000.00	51%	$1,110.00	$4,440.00	75%	$1,200.00	$4,800.00	81%	$1,500.00	$6,00
13	570042	42" CULVERT PIPE	LF	33	$296.64	$9,789.12	$245.00	$8,085.00	83%	$320.00	$10,560.00	108%	$490.00	$16,170.00	165%	$300.00	$9,90
14	570043	42" CULVERT PIPE END SECTION	EA	2	$2,369.00	$4,738.00	$3,600.00	$7,200.00	152%	$5,400.00	$10,800.00	228%	$4,917.00	$9,834.00	208%	$4,000.00	$8,00
15	601000	REMOVAL OF STRUCTURES AND OBSTRUCTIONS	LS	1	$5,922.50	$5,922.50	$20,000.00	$20,000.00	338%	$30,000.00	$30,000.00	507%	$59,166.00	$59,166.00	999%	$110,000.00	$110,00
16	602000	RIPRRAP CLASS A	CY	153	$415.09	$63,508.77	$350.00	$53,550.00	84%	$625.00	$95,625.00	151%	$750.00	$114,750.00	181%	$579.00	$88,58
17	602200	GABIONS	CY	216	$415.09	$89,659.44	$350.00	$75,600.00	84%	$533.00	$115,128.00	128%	$600.00	$129,600.00	145%	$725.00	$156,60
18	603260	CULVERT PROTECTION	SY	57	$12.36	$704.52	$100.00	$5,700.00	809%	$32.00	$1,824.00	259%	$60.00	$3,420.00	485%	$22.00	$1,25
19	603262	COMPOSTED MULCH SOCKS	LF	2,297	$4.12	$9,463.64	$10.00	$22,970.00	243%	$8.00	$18,376.00	194%	$10.00	$22,970.00	243%	$3.50	$8,03
20	607115	POST AND CABLE ACCESS FENCE 4'	LF	509	$36.05	$18,349.45	$50.00	$25,450.00	139%	$65.00	$33,085.00	180%	$40.00	$20,360.00	111%	$72.00	$36,64
21	608004	CONCRETE SIDEWALK- 4"	SY	12	$148.32	$1,779.84	$140.00	$1,680.00	94%	$175.00	$2,100.00	118%	$800.00	$9,600.00	539%	$150.00	$1,80
22	608106	DRIVE PAD- 6"	SY	2,330	$118.45	$275,988.50	$150.00	$349,500.00	127%	$200.00	$466,000.00	169%	$142.00	$330,860.00	120%	$150.00	$349,50
23	609200	HEADER CURB	LF	20	$50.00	$1,000.00	$42.00	$840.00	84%	$65.00	$1,300.00	130%	$130.00	$2,600.00	260%	$100.00	$2,00
24	632000	CLASS A SEEDING	AC	1.0	$17,767.50	$17,767.50	$25,000.00	$25,000.00	141%	$78,000.00	$78,000.00	439%	$66,000.00	$66,000.00	371%	$15,000.00	$15,00
25	662400	MANHOLE ADJUSTMENT	EA	8	$1,481.14	$11,849.12	$2,500.00	$20,000.00	169%	$800.00	$6,400.00	54%	$3,200.00	$25,600.00	216%	$1,500.00	$12,00
26	662500	MANHOLE FRAME AND COLLAR	EA	8	$888.89	$7,111.12	$2,700.00	$21,600.00	304%	$900.00	$7,200.00	101%	$2,200.00	$17,600.00	247%	$1,800.00	$14,40
27	701000	PANEL SIGNS	SF	131	$36.05	$4,722.55	$85.00	$11,135.00	236%	$64.00	$8,384.00	178%	$50.00	$6,550.00	139%	$61.00	$7,99
28	701100	STEEL/BASE POST FOR ALUMINUM PANEL SIGNS	LF	194	$12.36	$2,397.84	$100.00	$19,400.00	809%	$84.00	$16,296.00	680%	$35.00	$6,790.00	283%	$80.00	$15,52
29	702810	TRAFFIC CONTROL DEVICES FOR CONSTRUCTION	LS	1	$3,553.50	$3,553.50	$20,000.00	$20,000.00	563%	$15,120.00	$15,120.00	425%	$22,800.00	$22,800.00	642%	$25,000.00	$25,00
30	704704	HOT THERMOPLASTIC PAVEMENT MARKINGS 4"	LF	289	$5.15	$1,488.35	$15.00	$4,335.00	291%	$11.00	$3,179.00	214%	$6.00	$1,734.00	117%	$10.00	$2,89
31	704706	HOT THERMOPLASTIC PAVEMENT MARKINGS 12"	LS	128	$17.51	$2,241.28	$60.00	$7,680.00	343%	$48.00	$6,144.00	274%	$20.00	$2,560.00	114%	$46.00	$5,88
32	603281	SWPP PLAN PREPARATION AND MAINTENANCE	LS	1	$11,500.00	$11,500.00	$20,000.00	$20,000.00	174%	$21,000.00	$21,000.00	183%	$70,000.00	$70,000.00	609%	$8,700.00	$8,70
33	618000	TRAFFIC CONTROL MANAGEMENT	LS	1	$8,050.00	$8,050.00	$50,000.00	$50,000.00	621%	$40,800.00	$40,800.00	507%	$115,000.00	$115,000.00	1429%	$50,000.00	$50,00
34	621000	MOBILIZATION	LS	1	$46,000.00	$46,000.00	$100,000.00	$100,000.00	217%	$25,000.00	$25,000.00	54%	$145,900.00	$145,900.00	317%	$360,000.00	$360,00
35	801000	CONSTRUCTION STAKING BY CONTRACTOR	LS	1	$41,429.35	$41,429.35	$50,000.00	$50,000.00	121%	$78,000.00	$78,000.00	188%	$48,000.00	$48,000.00	116%	$40,000.00	$40,00
36	802000	POST CONTRUSTION PLANS	LS	1	$11,500.00	$11,500.00	$10,000.00	$10,000.00	87%	$11,000.00	$11,000.00	96%	$5,000.00	$5,000.00	43%	$5,000.00	$5,00
				TOTAL WITHOUT NMGRT		$808,968.56	SUBTOTAL	$1,111,917.00	137.45%	SUBTOTAL	$1,301,634.00	160.90%	SUBTOTAL	$1,621,620.00	200.46%	SUBTOTAL	$1,599,47

NOTICE OF AWARD

TO: Gabriel Martinez, Owner
Name

GM Emulsion, LLC
Address

5935 Agua Fria Street, Santa Fe, NM 87507
City

DATE: 09/24/2024

FROM: City of Santa Fe

PROJECT NO.		**CONTRACT NO.**	D19937
CONTROL NO.	S100770	**VENDOR NO.**	3882

SCOPE OF WORK (Including Routes and Termini): To construct the Tierra Contenta Trail Extension Project from Buffalo Grass to South Meadows.

The OWNER at the recommendation of Eric Cornelius, PE, CFM, the project's Engineer of Record (Exhibit A) has considered the BID you submitted for the above project. You are hereby notified that your Bid has been accepted.

You are required to return an acknowledged copy of this NOTICE OF AWARD/WORK ORDER to the owner. *(The following information must be included on all invoicing, PROJECT NO.; CONTRACT NO.; CONTROL NO.; and VENDOR NO.).*

Starting date (on or before): 03/01/2025 or as soon as your contract with the City has been approved. Completion date (on or before): 12/30/2025

By: Romella Glorioso-Moss Date: 09/24/2024
Name (Print Name)

Romella Glorioso-Moss
Signature

Capital Projects Manager - Complete Streets
Title

ACCEPTANCE OF NOTICE *(Contractor or Road Superintendent)*
Receipt of the above NOTICE OF AWARD/WORK ORDER is hereby acknowledged,

By: Fred Marquez for Gabriel Martinez Date: 9-24-2024
GABRIEL MARTINEZ

Title: Project Manager Owner

Santa Fe Engineering Consultants, LLC
SFEC
Civil and Traffic Engineering
Construction Management
Land Development
1599 St Francis Drive, Suite B
Santa Fe, N. M. 87505
(505) 982-2845 Fax (505) 982-2641

September 20, 2024

Ms, Romella Glorioso-Moss,
Senior Project Manager
City of Santa Fe,
737 Agua Fria Street,
Santa Fe, NM 87501

RE: TC TRAIL EXTENTION FROM BUFFALO GRASS TO SOUTH MEADOWS- PHASE A CIP#474A-ITB 24090 LETTER OF BID REWARD RECOMMENDATION.

Dear Ms, Romella Glorioso-Moss,

On September 3, 2024, bids were opened for the above referenced project. The detailed bid sheets were provided to Santa Fe Engineering Consultants LLC for analysis on September 11, 2024. There were five responsive bidders. The bids have been reviewed and tabulated. The bid tabulation is attached. There were no math errors in the contractor bids. The apparent low bidder was GM Emulsion, LLC.

Based on the above analysis, it is recommended that GM Emulsion, LLC. be awarded the contract for the above referenced project.

If you have any questions or desire additional information, please do not hesitate to contact me.

Sincerely,

Eric Cornelius, P.E., C.F.M.
Santa Fe Engineering Consultants, LLC
1599 S. St. Francis Dr., Suite B
Santa Fe, NM 87505

Katrina A. Quintana

NMDOT Concurrence
Katrina Quintana
T/LPA Region Coordinator
North Region Design

CITY OF SANTA FE
TC TRAIL EXTENTION PHASE A CIP#474A-ITB 24090
BID TABULATIONS
9/20/2024

			ENGINEER'S ESTIMATE (2023 PRICING)				GM EMULSION, LLC			JDR AND ASSOCIATES, LLC			MERIDIAN CONTRACTING, INC			STAR PAVIN	
ITEM NO.	NMDOT NO.	DESCRIPTION	UNIT	APPROX. QTY.	UNIT PRICE	EST. PRICE	UNIT PRICE	EST. PRICE	% OF ENGINEER ESTIMATE	UNIT PRICE	EST. PRICE	% OF ENGINEER ESTIMATE	UNIT PRICE	EST. PRICE	% OF ENGINEER ESTIMATE	UNIT PRICE	EST. PRI
1	201000	CLEARING AND GRUBBING	LS	1	$11,845.00	$11,845.00	$20,000.00	$20,000.00	169%	$20,000.00	$20,000.00	169%	$55,000.00	$55,000.00	464%	$10,000.00	$10,00
2	203000	UNCLASSIFIED EXCAVATION	CY	651	$17.51	$11,399.01	$20.00	$13,020.00	114%	$12.00	$7,812.00	69%	$35.00	$22,785.00	200%	$40.00	$26,04
3	203100	BORROW	CY	345	$37.08	$12,792.60	$25.00	$8,625.00	67%	$45.00	$15,525.00	121%	$35.00	$12,075.00	94%	$60.00	$20,70
4	207000	SUBGRADE PREPARATION	SY	712	$5.15	$3,666.80	$4.00	$2,848.00	78%	$6.00	$4,272.00	117%	$8.00	$5,696.00	155%	$8.00	$5,69
5	303160	BASECOURSE- 6"	SY	593	$17.51	$10,383.43	$18.00	$10,674.00	103%	$25.00	$14,825.00	143%	$70.00	$41,510.00	400%	$12.00	$7,11
6	417000	MISC. PAVING	SY	9	$59.74	$537.66	$165.00	$1,485.00	276%	$150.00	$1,350.00	251%	$850.00	$7,650.00	1423%	$200.00	$1,80
7	511030	STRUCTURAL CONCRETE, CLASS AA	CY	53	$1,125.79	$59,666.87	$1,760.00	$93,280.00	156%	$1,800.00	$95,400.00	160%	$2,800.00	$148,400.00	249%	$2,700.00	$143,10
8	540060	REINFORCING BARS, GRADE 60	LBS	2,955	$4.12	$12,174.60	$3.00	$8,865.00	73%	$3.00	$8,865.00	73%	$6.00	$17,730.00	146%	$4.00	$11,82
9	570018	18" CULVERT PIPE	LF	97	$148.32	$14,387.04	$110.00	$10,670.00	74%	$142.00	$13,774.00	96%	$330.00	$32,010.00	222%	$170.00	$16,49
10	570429	18" CULVERT PIPE END SECTION	EA	10	$947.60	$9,476.00	$500.00	$5,000.00	53%	$740.00	$7,400.00	78%	$850.00	$8,500.00	90%	$900.00	$9,00
11	570024	24" CULVERT PIPE	LF	35	$177.16	$6,200.60	$135.00	$4,725.00	76%	$190.00	$6,650.00	107%	$360.00	$12,600.00	203%	$200.00	$7,00
12	570025	24" CULVERT PIPE END SECTION	EA	4	$1,481.14	$5,924.56	$750.00	$3,000.00	51%	$1,110.00	$4,440.00	75%	$1,200.00	$4,800.00	81%	$1,500.00	$6,00
13	570042	42" CULVERT PIPE	LF	33	$296.64	$9,789.12	$245.00	$8,085.00	83%	$320.00	$10,560.00	108%	$490.00	$16,170.00	165%	$300.00	$9,90
14	570043	42" CULVERT PIPE END SECTION	EA	2	$2,369.00	$4,738.00	$3,600.00	$7,200.00	152%	$5,400.00	$10,800.00	228%	$4,917.00	$9,834.00	208%	$4,000.00	$8,00
15	601000	REMOVAL OF STRUCTURES AND OBSTRUCTIONS	LS	1	$5,922.50	$5,922.50	$20,000.00	$20,000.00	338%	$30,000.00	$30,000.00	507%	$59,166.00	$59,166.00	999%	$110,000.00	$110,00
16	602000	RIPRRAP CLASS A	CY	153	$415.09	$63,508.77	$350.00	$53,550.00	84%	$625.00	$95,625.00	151%	$750.00	$114,750.00	181%	$579.00	$88,58
17	602200	GABIONS	CY	216	$415.09	$89,659.44	$350.00	$75,600.00	84%	$533.00	$115,128.00	128%	$600.00	$129,600.00	145%	$725.00	$156,60
18	603260	CULVERT PROTECTION	SY	57	$12.36	$704.52	$100.00	$5,700.00	809%	$32.00	$1,824.00	259%	$60.00	$3,420.00	485%	$22.00	$1,25
19	603262	COMPOSTED MULCH SOCKS	LF	2,297	$4.12	$9,463.64	$10.00	$22,970.00	243%	$8.00	$18,376.00	194%	$10.00	$22,970.00	243%	$3.50	$8,03
20	607115	POST AND CABLE ACCESS FENCE 4'	LF	509	$36.05	$18,349.45	$50.00	$25,450.00	139%	$65.00	$33,085.00	180%	$40.00	$20,360.00	111%	$72.00	$36,64
21	608004	CONCRETE SIDEWALK- 4"	SY	12	$148.32	$1,779.84	$140.00	$1,680.00	94%	$175.00	$2,100.00	118%	$800.00	$9,600.00	539%	$150.00	$1,80
22	608106	DRIVE PAD- 6"	SY	2,330	$118.45	$275,988.50	$150.00	$349,500.00	127%	$200.00	$466,000.00	169%	$142.00	$330,860.00	120%	$150.00	$349,50
23	609200	HEADER CURB	LF	20	$50.00	$1,000.00	$42.00	$840.00	84%	$65.00	$1,300.00	130%	$130.00	$2,600.00	260%	$100.00	$2,00
24	632000	CLASS A SEEDING	AC	1.0	$17,767.50	$17,767.50	$25,000.00	$25,000.00	141%	$78,000.00	$78,000.00	439%	$66,000.00	$66,000.00	371%	$15,000.00	$15,00
25	662400	MANHOLE ADJUSTMENT	EA	8	$1,481.14	$11,849.12	$2,500.00	$20,000.00	169%	$800.00	$6,400.00	54%	$3,200.00	$25,600.00	216%	$1,500.00	$12,00
26	662500	MANHOLE FRAME AND COLLAR	EA	8	$888.89	$7,111.12	$2,700.00	$21,600.00	304%	$900.00	$7,200.00	101%	$2,200.00	$17,600.00	247%	$1,800.00	$14,40
27	701000	PANEL SIGNS	SF	131	$36.05	$4,722.55	$85.00	$11,135.00	236%	$64.00	$8,384.00	178%	$50.00	$6,550.00	139%	$61.00	$7,99
28	701100	STEEL/BASE POST FOR ALUMINUM PANEL SIGNS	LF	194	$12.36	$2,397.84	$100.00	$19,400.00	809%	$84.00	$16,296.00	680%	$35.00	$6,790.00	283%	$80.00	$15,52
29	702810	TRAFFIC CONTROL DEVICES FOR CONSTRUCTION	LS	1	$3,553.50	$3,553.50	$20,000.00	$20,000.00	563%	$15,120.00	$15,120.00	425%	$22,800.00	$22,800.00	642%	$25,000.00	$25,00
30	704704	HOT THERMOPLASTIC PAVEMENT MARKINGS 4"	LF	289	$5.15	$1,488.35	$15.00	$4,335.00	291%	$11.00	$3,179.00	214%	$6.00	$1,734.00	117%	$10.00	$2,89
31	704706	HOT THERMOPLASTIC PAVEMENT MARKINGS 12"	LS	128	$17.51	$2,241.28	$60.00	$7,680.00	343%	$48.00	$6,144.00	274%	$20.00	$2,560.00	114%	$46.00	$5,88
32	603281	SWPP PLAN PREPARATION AND MAINTENANCE	LS	1	$11,500.00	$11,500.00	$20,000.00	$20,000.00	174%	$21,000.00	$21,000.00	183%	$70,000.00	$70,000.00	609%	$8,700.00	$8,70
33	618000	TRAFFIC CONTROL MANAGEMENT	LS	1	$8,050.00	$8,050.00	$50,000.00	$50,000.00	621%	$40,800.00	$40,800.00	507%	$115,000.00	$115,000.00	1429%	$50,000.00	$50,00
34	621000	MOBILIZATION	LS	1	$46,000.00	$46,000.00	$100,000.00	$100,000.00	217%	$25,000.00	$25,000.00	54%	$145,900.00	$145,900.00	317%	$360,000.00	$360,00
35	801000	CONSTRUCTION STAKING BY CONTRACTOR	LS	1	$41,429.35	$41,429.35	$50,000.00	$50,000.00	121%	$78,000.00	$78,000.00	188%	$48,000.00	$48,000.00	116%	$40,000.00	$40,00
36	802000	POST CONTRUSTION PLANS	LS	1	$11,500.00	$11,500.00	$10,000.00	$10,000.00	87%	$11,000.00	$11,000.00	96%	$5,000.00	$5,000.00	43%	$5,000.00	$5,00
				TOTAL WITHOUT NMGRT		$808,968.56	SUBTOTAL	$1,111,917.00	137.45%	SUBTOTAL	$1,301,634.00	160.90%	SUBTOTAL	$1,621,620.00	200.46%	SUBTOTAL	$1,599,47

CERTIFICATE OF LIABILITY INSURANCE

DATE (MM/DD/YYYY) 4/11/2024

THIS CERTIFICATE IS ISSUED AS A MATTER OF INFORMATION ONLY AND CONFERS NO RIGHTS UPON THE CERTIFICATE HOLDER. THIS CERTIFICATE DOES NOT AFFIRMATIVELY OR NEGATIVELY AMEND, EXTEND OR ALTER THE COVERAGE AFFORDED BY THE POLICIES BELOW. THIS CERTIFICATE OF INSURANCE DOES NOT CONSTITUTE A CONTRACT BETWEEN THE ISSUING INSURER(S), AUTHORIZED REPRESENTATIVE OR PRODUCER, AND THE CERTIFICATE HOLDER.

IMPORTANT: If the certificate holder is an ADDITIONAL INSURED, the policy(ies) must have ADDITIONAL INSURED provisions or be endorsed. If SUBROGATION IS WAIVED, subject to the terms and conditions of the policy, certain policies may require an endorsement. A statement on this certificate does not confer rights to the certificate holder in lieu of such endorsement(s).

PRODUCER License # 0757776 HUB International Insurance Services (SOW) 2905 Rodeo Park Drive East Building 6, Suite 100 Santa Fe, NM 87505	CONTACT NAME: Michelle Vialpando PHONE (A/C, No, Ext): (505) 992-1873 FAX (A/C, No): (866) 487-3972 E-MAIL ADDRESS: michelle.vialpando@hubinternational.com
INSURED GM Emulsion LLC 5935 Agua Fria St. Santa Fe, NM 87507	INSURER A : Selective Insurance Company of America — NAIC # 12572 INSURER B : Builders Trust of New Mexico INSURER C : Evanston Insurance Company — 35378 INSURER D : INSURER E : INSURER F :

COVERAGES **CERTIFICATE NUMBER:** **REVISION NUMBER:**

THIS IS TO CERTIFY THAT THE POLICIES OF INSURANCE LISTED BELOW HAVE BEEN ISSUED TO THE INSURED NAMED ABOVE FOR THE POLICY PERIOD INDICATED. NOTWITHSTANDING ANY REQUIREMENT, TERM OR CONDITION OF ANY CONTRACT OR OTHER DOCUMENT WITH RESPECT TO WHICH THIS CERTIFICATE MAY BE ISSUED OR MAY PERTAIN, THE INSURANCE AFFORDED BY THE POLICIES DESCRIBED HEREIN IS SUBJECT TO ALL THE TERMS, EXCLUSIONS AND CONDITIONS OF SUCH POLICIES. LIMITS SHOWN MAY HAVE BEEN REDUCED BY PAID CLAIMS.

INSR LTR	TYPE OF INSURANCE	ADDL INSD	SUBR WVD	POLICY NUMBER	POLICY EFF (MM/DD/YYYY)	POLICY EXP (MM/DD/YYYY)	LIMITS	
A	X COMMERCIAL GENERAL LIABILITY CLAIMS-MADE X OCCUR X PD Ded: $1,000 GEN'L AGGREGATE LIMIT APPLIES PER: POLICY X PRO-JECT LOC OTHER:			S 2505515	4/12/2024	4/12/2025	EACH OCCURRENCE DAMAGE TO RENTED PREMISES (Ea occurrence) MED EXP (Any one person) PERSONAL & ADV INJURY GENERAL AGGREGATE PRODUCTS - COMP/OP AGG	$ 1,000,000 $ 1,000,000 $ 15,000 $ 1,000,000 $ 3,000,000 $ 3,000,000
A	AUTOMOBILE LIABILITY X ANY AUTO OWNED AUTOS ONLY SCHEDULED AUTOS X HIRED AUTOS ONLY X NON-OWNED AUTOS ONLY			S 2505515	4/12/2024	4/12/2025	COMBINED SINGLE LIMIT (Ea accident) BODILY INJURY (Per person) BODILY INJURY (Per accident) PROPERTY DAMAGE (Per accident)	$ 1,000,000 $ $ $
A	X UMBRELLA LIAB X OCCUR EXCESS LIAB CLAIMS-MADE DED X RETENTION $ 0			S 2505515	4/12/2024	4/12/2025	EACH OCCURRENCE AGGREGATE	$ 5,000,000 $ 5,000,000
B	WORKERS COMPENSATION AND EMPLOYERS' LIABILITY ANY PROPRIETOR/PARTNER/EXECUTIVE OFFICER/MEMBER EXCLUDED? (Mandatory in NH) Y / N: N If yes, describe under DESCRIPTION OF OPERATIONS below	N / A		5752	1/1/2024	1/1/2025	X PER STATUTE OTH-ER E.L. EACH ACCIDENT E.L. DISEASE - EA EMPLOYEE E.L. DISEASE - POLICY LIMIT	$ 2,000,000 $ 2,000,000 $ 2,000,000
A	Leased/Rented Eqpt			S 2505515	4/12/2024	4/12/2025	Ded: $1,000 / Limit:	100,000
C	Pollution / Environm			CPLMOL113826	10/28/2022	10/28/2024	1,000,000 /	2,000,000

DESCRIPTION OF OPERATIONS / LOCATIONS / VEHICLES (ACORD 101, Additional Remarks Schedule, may be attached if more space is required)

CERTIFICATE HOLDER

City of Santa Fe
73 Paseo Real
Santa Fe, NM 87507

CANCELLATION

SHOULD ANY OF THE ABOVE DESCRIBED POLICIES BE CANCELLED BEFORE THE EXPIRATION DATE THEREOF, NOTICE WILL BE DELIVERED IN ACCORDANCE WITH THE POLICY PROVISIONS.

AUTHORIZED REPRESENTATIVE

© 1988-2015 ACORD CORPORATION. All rights reserved.
The ACORD name and logo are registered marks of ACORD

GB 600 GM Emulsion LLC (S100770 Tierra Contenta Trail) (1)

Final Audit Report 2024-11-26

Created:	2024-11-18
By:	JAMES EDWARDS (jwedwards@santafenm.gov)
Status:	Canceled / Declined
Transaction ID:	CBJCHBCAABAAdtJA7F51IvSHz9UU5NRGqqYWmQICYEnv

"GB 600 GM Emulsion LLC (S100770 Tierra Contenta Trail) (1)" History

Document created by JAMES EDWARDS (jwedwards@santafenm.gov)
2024-11-18 - 10:13:26 PM GMT- IP address: 97.182.23.177

Document emailed to ajhopkins@santafenm.gov ajhopkins@santafenm.gov (ajhopkins@santafenm.gov) for signature
2024-11-18 - 10:17:52 PM GMT

Email viewed by ajhopkins@santafenm.gov ajhopkins@santafenm.gov (ajhopkins@santafenm.gov)
2024-11-20 - 5:45:30 PM GMT- IP address: 104.47.65.254

Document e-signed by ajhopkins@santafenm.gov ajhopkins@santafenm.gov (ajhopkins@santafenm.gov)
Signature Date: 2024-11-20 - 5:46:21 PM GMT - Time Source: server- IP address: 63.232.20.2

Document sent to JoAnn Lovato (jdlovato@santafenm.gov) and Travis Dutton-Leyda (tkduttonleyda@santafenm.gov) for signature. One of them to sign
2024-11-20 - 5:46:24 PM GMT

Email viewed by Travis Dutton-Leyda (tkduttonleyda@santafenm.gov)
2024-11-22 - 5:46:04 AM GMT- IP address: 104.28.50.165

Document e-signed by Travis Dutton-Leyda (tkduttonleyda@santafenm.gov)
Signature Date: 2024-11-22 - 5:05:51 PM GMT - Time Source: server- IP address: 63.232.20.2

Document emailed to mtbonifer@santafenm.gov for signature
2024-11-22 - 5:05:55 PM GMT

Email viewed by mtbonifer@santafenm.gov
2024-11-22 - 5:44:43 PM GMT- IP address: 104.47.65.254

Signer mtbonifer@santafenm.gov entered name at signing as Matthew Bonifer

2024-11-22 - 5:45:33 PM GMT- IP address: 63.232.20.2

Document e-signed by Matthew Bonifer (mtbonifer@santafenm.gov)

Signature Date: 2024-11-22 - 5:45:35 PM GMT - Time Source: server- IP address: 63.232.20.2

Document emailed to EMILY OSTER (ekoster@santafenm.gov) for signature

2024-11-22 - 5:45:37 PM GMT

Email viewed by EMILY OSTER (ekoster@santafenm.gov)

2024-11-26 - 9:19:16 PM GMT- IP address: 104.47.64.254

Document declined by EMILY OSTER (ekoster@santafenm.gov)

Decline reason: I'm sorry, I can't sign this item with the current packet. There is no insurance information in the packet. Please update the packet and resubmit. Thank you, Emily

2024-11-26 - 9:24:35 PM GMT- IP address: 63.232.20.2

GB 600 GM Emulsion LLC (S100770 Tierra Contenta Trail) signed

Final Audit Report 2024-12-03

Created:	2024-12-02
By:	JAMES EDWARDS (jwedwards@santafenm.gov)
Status:	Signed
Transaction ID:	CBJCHBCAABAATtVGpKvr2RTZNRh5PC5VooGlzNI6Y3mJ

"GB 600 GM Emulsion LLC (S100770 Tierra Contenta Trail) signed" History

Document created by JAMES EDWARDS (jwedwards@santafenm.gov)
2024-12-02 - 9:19:58 PM GMT- IP address: 97.182.93.53

Document emailed to EMILY OSTER (ekoster@santafenm.gov) for signature
2024-12-02 - 9:20:59 PM GMT

Email viewed by EMILY OSTER (ekoster@santafenm.gov)
2024-12-03 - 9:38:52 PM GMT- IP address: 104.47.64.254

Document e-signed by EMILY OSTER (ekoster@santafenm.gov)
Signature Date: 2024-12-03 - 9:45:15 PM GMT - Time Source: server- IP address: 63.232.20.2

Agreement completed.
2024-12-03 - 9:45:15 PM GMT

City of Santa Fe, New Mexico

200 Lincoln Avenue, P.O. Box 909, Santa Fe, N.M. 87504-0909
www.santafenm.gov

Alan Webber, Mayor

Councilors:
Signe I. Lindell, Mayor Pro Tem, District 1
Alma G. Castro, District 1
Michael J. Garcia, District 2
Carol Romero-Wirth, District 2
Lee Garcia, District 3
Pilar F.H. Faulkner, District 3
Jamie Cassutt, District 4
Amanda Chavez, District 4

DATE: **December 26, 2024**

TO: **Finance Committee, Public Works and Utilities, and Governing Body**

FROM: **James Harris, Airport Manager** JH

VIA: **Kelly Bynon, Administrative Manager** Kelly Bynon

ITEM AND ISSUE:

Request For Approval to Accept the New Mexico Department of Transportation Aviation Division Grant # SAF-25-02 in the Amount of $540,000 for the North Apron Reconstruction Project.

1. Request For Approval of a Budget Amendment Resolution (BAR) in the Total Amount of $600,000 to Increase WIP Design and WIP Construction using New Mexico Department of Transportation Aviation Division Funding for the North Apron Reconstruction Project.

(James Harris, Airport Manager, jcharris@santafenm.gov; Kelly Bynon, Administrative Manager, kabynon@santafenm.gov)

BACKGROUND AND SUMMARY:

New Mexico Department of Transportation Aviation Division Grant # SAF-25-02 in the Amount of $540,000 for the North Apron Reconstruction Project. This state grant is a matching grant to FAA grant #3-35-0037-063-2024 that has already been accepted by Governing Body.

ACTION:

Approval to Accept the New Mexico Department of Transportation Aviation Division Grant # SAF-25-02 in the Amount of $540,000 for the North Apron Reconstruction Project.

1. Approval of a Budget Amendment Resolution (BAR) in the Total Amount of $600,000 to Increase WIP Design and WIP Construction using New Mexico Department of Transportation Aviation Division Funding for the North Apron Reconstruction Project.

COMMITTEE REVIEW:

Public Works & Utilities: 01/21/2025
Finance Committee: 01/27/2025
Governing Body: 01/29/2025

Log # *{Finance use only}*:	
Journal # *{Finance use only}*:	

City of Santa Fe, New Mexico
BUDGET AMENDMENT RESOLUTION (BAR)

DEPARTMENT / DIVISION NAME	DATE
Public Works / Airport	12/26/2024

ITEM DESCRIPTION	ORG	OBJECT	PROJECT	INCREASE	DECREASE
EXPENDITURES				*{enter as positive #}*	*{enter as negative #}*
WIP Design	5450407	572960	AIR2554503	11,748	
WIP Construction	5450407	572970	AIR2554503	588,252	
REVENUES				*{enter as negative #}*	*{enter as positive #}*
NMDOT	5450407	490150	AIR2554503	(540,000)	
				$ 60,000	$ -

JUSTIFICATION: *(use additional page if needed)*
--Attach supporting documentation/memo

NMDOT Grant SAF-25-02 was awarded to Santa Fe Regional Airport for the North Apron Reconstruction Project.

This grant is a match grant with USDOT Grant 063. The FAA grant has already been approved and budgeted

under PL AIR2554503 in the amount of $191,215 for assistance with the DESIGN phase of this project.

NMDOT grant 25-02 will use $11,748 for Design purposes and the rest for construction at a later time. $60K comes from 545

for city portion

{Complete section below if BAR results in a net change to ANY Fund}

Fund(s) Affected	Fund Balance Increase/(Decrease)
545	(60,000)
TOTAL:	**(60,000)**

Kelly Bynon 12/26/2024
Prepared By *{print name}* Date

{Use this form for Finance Committee/ City Council agenda items ONLY}

CITY COUNCIL APPROVAL

City Council Approval Date

Agenda Item #:

ALEXIS LOTERO (Dec 27, 2024 11:07 MST) Dec 27, 2024
Budget Officer Date

Division Director Signature *{optional}* Date

James Harris (Dec 26, 2024 14:19 MST) Dec 26, 2024
Department Director Signature Date

Finance Director *{≤ $5,000}* Date

City Manager *{≤ $60,000}* Date

Docusign Envelope ID: 2AEE3C72-8C14-4418-90CC-DC86D05E7793

NEW MEXICO DEPARTMENT OF TRANSPORTATION

Aviation Grant Agreement Form

Date: Nov 13, 2024

Project Location: SAF - SANTA FE MUNICIPAL AIRPORT

Sponsor: SANTA FE, CITY OF

Address: PO BOX 909

City: SANTA FE NM Zip Code: 87504

Participation: FAA

Funding Breakdown:

Contract No. AVA1643

Project No. SAF-25- 02

Vendor No. 0000054360

Expiration Date 12/1/2026

Purchase Order No: 0000410654

Docusign Envelope ID: 2AEE3C72-8C14-4418-90CC-DC86D05E7793

AVIATION GRANT AGREEMENT

This Agreement is between the New Mexico Department of Transportation, acting through its Aviation Division (Department), and the Sponsor. This Agreement is effective pursuant to Section 7, below.

Now Therefore, pursuant to the New Mexico Aviation Act, NMSA 1978, Section 64-1-11 et seq., and the New Mexico Municipal Airport Law, NMSA 1978 Sections 3-39-1 et seq., the parties agree as follows:

1. Purpose.
The purpose of this Agreement is to provide funding, authorized in Section 64-1-13, NMSA 1978, to the Sponsor to assist in financing an aviation project.

a. Project Description:

NORTH APRON (Design & Re-Construct)

b. Site of Development.The site of development is identified on the property map, attached as Exhibit A.
c. Funding.Below is the funding for the Project. The State's contribution is the maximum amount that the Department will contribute. Attached as Exhibit B is the engineer's cost estimate.

State	Sponsor	Other	Total
$ 540,000	$ 60,000	$ 5,400,000	$ 6,000,000

2. The Sponsor Shall:

a. Pay all costs, perform all labor, and supply all material, except as described in the Engineers Estimate attached as EXHIBIT B.
b. Provide a representative from its organization who shall serve as the single point of contact for the Department.
c. Establish and maintain a resolution by which the Sponsor agrees to establish an airport maintenance program and appoint an individual to be responsible for management of the program.
d. Initiate engineering, survey, and all other design activities, inspect Project construction and, coordinate all meetings.
e. Be responsible for all design and pre-construction activities.
f. Initiate and cause to be prepared all necessary documents including plans, specifications, estimates (PS&E), and reports for this Project.
g. Assure that all design and PS&E are performed under the direct supervision of a Registered New Mexico Professional Engineer.
h. Design the Project in accordance with State and Federal guidelines and/or advisory circulars, hereby incorporated into this Agreement. Construction projects will be accomplished in accordance with the Federal Aviation Administration's Standards for Specifying Construction of Airports (Advisory Circular 150/5370-10, current edition).

i. Notify the Department when the plans and specifications are sufficiently complete for review.
j. Make no changes in design or scope of work without documented approval of the Department.
k. Advertise for and contract for the construction of the Project in accordance with federal and state laws or local ordinances.
l. Require the Engineer to prepare a final detailed estimate of the work, indicating the bid items, the quantity in each item, the unit bid price and cost of the items based on low acceptable bid prices. Progress estimates shall be submitted to the Department in acceptable form so that details of quantities allowed on various items of work shall be shown on each progress payment.
m. The Sponsor shall submit to the Department one complete set of plans and specifications which incorporate all comments and recommendations received during pre-bid activities and which have been fully executed by all involved parties.
n. The Sponsor shall take all steps, including litigation if necessary, to recover State funds spent in violation of state laws and rules. The Sponsor shall return any recovered state funds to the Department. It shall furnish to the Department, upon request, all documents and records pertaining to the determination of the amount of the state's share of any settlement, litigation, negotiation, or the efforts taken to recover such funds. All settlements or other final dispositions by the Sponsor, in court or otherwise, involving the recovery of such state funds shall be approved in advance by the Department.
o. The Sponsor shall, upon reasonable notice, allow the Department the right to inspect the Project for the purposes of determining if it is being constructed in a good and workmanlike manner, and if the approved plans and specifications are being complied with satisfactorily. If an inspection discloses a failure to substantially meet such requirements and standards the Department may terminate payment or payments until a mutually satisfactory remedy is reached.

3. The Department Shall:

a. Assign a contact person for this project.
b. Provide timely reviews of all submittals of scopes, plans, specifications, investigations or other documents.
c. The Department shall not provide an extensive check of any plans submitted by the Sponsor. The Department's concurrence of the Project plans does not relieve the Sponsor or its Consultant of their responsibility for errors and omissions.

4. Both Parties Agree:

a. The allowable costs of this Project shall not include costs determined by the Department to be ineligible for consideration under the Aviation Act.
b. The expenditure of any State money is subject to approval by the Department.
c. Funds granted under the Local Governments Road Fund, NMSA 1978 Section 67-3-28.2, shall not be used to administer this Project or used to meet the local match.

5. Method of Payment - Reimbursement.

The Department shall reimburse the Sponsor in accordance with the terms of this agreement. Claims for reimbursement shall be completed on form A-1159, Request for Reimbursement. Each request for reimbursement shall contain proof of payment for valid expenditures for services rendered by a third party or items of tangible property received by the Sponsor for the implementation of the Project. The Department reserves the right to withhold reimbursement on requests that are incorrect and/or incomplete. The Final reimbursement request must be received no later than thirty (30) days after completion of the project or the expiration of this Agreement.

The Sponsor shall not be reimbursed for any costs incurred prior to the full execution of the Agreement, after the expiration of the Agreement or in excess of the maximum dollar amount of the agreement unless the maximum dollar amount is duly amended prior to incurring the service or deliverable. Any unexpended portion of funds subject to this Agreement shall revert to the State Aviation Fund.

6. Accountability of Receipts and Disbursements.

There shall be strict accountability for all receipts and disbursements. The Sponsor shall maintain all records and documents relative to the Project for a minimum of three (3) years after completion of said Project. The Sponsor shall furnish the Department or State Auditor, upon demand, all records which support the terms of this Agreement.

Docusign Envelope ID: 2AEE3C72-8C14-4418-90CC-DC86D05E7793

7. Term

The Agreement becomes effective upon signatures of all parties. The Agreement's effective date is the date opposite of the NMDOT Cabinet Secretary or Designee's signature on the signature page. This agreement shall expire two (2) years from the effective date, unless terminated pursuant to Sections 8 and 17, below.

8. Termination for Cause.

The Department has the option to terminate this Agreement if the Sponsor fails to comply with any provision of this Agreement. A written notice of termination shall be given at least thirty (30) days prior to the intended date of termination and shall identify all of the Sponsor's breaches on which the termination is based.

The Department may provide the Sponsor a reasonable opportunity to correct the breach. If within ten (10) days after receipt of a written notice of termination, the Sponsor has not corrected the breach or, in the case of a breach which cannot be corrected in ten (10) days, the Sponsor has not begun and proceeded in good faith to correct the breach, the Department may declare the Sponsor in default and terminate the Agreement. The Department shall retain any and all other remedies available to it under the law.

By such termination neither party may nullify obligations already incurred for performance or failure to perform for the work rendered prior to the date of termination. However, neither party shall have any obligation to perform services or make payment for services rendered after such date of termination.

9. Disposition of Property.

a. Upon termination of this Agreement, the Sponsor shall account for any remaining property, materials or equipment belonging to the Department and dispose of them as directed by the Department.
b. Any equipment, materials or supplies procured under this Agreement shall be used solely for aviation purposes maintained according to the manufacturers guidelines and stored at the airport.

10. Representations and Certification.

The Sponsor, by signing this Agreement, represents and certifies the following:

a. Legal Authority - The Sponsor has the legal power and authority to: (1) do all things necessary in order to undertake and carry out the Project in conformity with the provisions stated in the New Mexico Aviation Act and Rules and Regulations pursuant thereto; (2) accept, receive and disburse grant funds from the State of New Mexico in aid of the Project; and (3) carry out all provisions stated in this Aviation Grant Agreement.

b. Defaults - The Sponsor is not in default on any obligation to the State of New Mexico relative to the development, operation or maintenance of any airport or aviation project.

c. Possible Disabilities - The Sponsor states, by execution of this Agreement, there are no facts or circumstance (including the existence of effective or proposed leases, use agreements, or other legal instruments affecting use of the airport or the existence of pending litigation or other legal proceedings) which in reasonable probability might make it impossible for the Sponsor to carry out and complete the Project.

d. Land - The Sponsor holds the property interest in the areas of land which are to be developed or used as part of or in connection with the Project and is identified in a current Airport Property Map. The Sponsor further certifies that the aforementioned is based on a title examination by a qualified attorney or title company who has determined that the Sponsor holds the stated property interests.

11. Assurances.

The Sponsor, by signing this Agreement, covenants and agrees to the following Assurances:

a. That it will operate the airport for the use and benefit of the public on fair and reasonable terms and without unjust discrimination.
b. That it will keep the airport open to all types, kinds and classes of aeronautical use without discrimination between such types, kinds, and classes. The Sponsor shall establish fair, equal and not unjustly discriminatory conditions to be met by all users of the airport as may be necessary for the safe and efficient operation.

Docusign Envelope ID: 2AEE3C72-8C14-4418-90CC-DC86D05E7793

c. Neither it nor any person or organization occupying space at the airport will discriminate against any person or class of persons by reason of race, color, creed, or national origin in the use of the facility and, further that any person, firm or corporation rendering service to the public on the airport will do so on a fair, equal and not unjustly discriminatory basis.

d. Operate and maintain in a safe and serviceable condition the airport and all facilities which are necessary to serve the aeronautical users and will not permit any activity which would interfere with its use for airport purposes.

e. By acquisition of land interest, acquisition of easements, airspace zoning, or other accepted means, protect the runway approaches and the airspace in the immediate vicinity of the airport from the construction, alteration, erection or growth of any structure which would interfere with the use or operation of the airport.

f. Comply with the New Mexico Aviation Act and associated provisions, NMSA 1978 Sections 64-1-1 to 64-5-4 and the New Mexico Municipal Airport Law, NMSA 1978 Sections 3-39-1 et seq.

g. That it shall not award the contract nor give bidding documents to any contractor who is subject to suspension or debarment by the U.S. Department of Transportation or the Department at the time of the bidding or award of the contract. Violation of this provision shall void this Agreement.

12. Third Party Beneficiaries.
It is not intended by any of the provisions of any part of this Agreement to create in the public or any member thereof a third party beneficiary or to authorize anyone not a party to the Agreement to maintain a suit(s) for wrongful death(s), bodily and/or personal injury(ies) to person(s), damage(s) to property(ies), and/or any other claim(s) whatsoever pursuant to the provisions of this Agreement.

13. New Mexico Tort Claims Act.
As between the Department and the Sponsor, neither party shall be responsible for liability incurred as a result of the other party's acts or omissions in connection with this Agreement. Any liability incurred in connection with this Agreement is subject to the immunities and limitations of the New Mexico Tort Claims Act, NMSA 1978, Section 41-4-1, *et seq*. This paragraph is intended only to define the liabilities between the parties and it is not intended to modify, in any way, the parties' liabilities as governed by common law or the New Mexico Tort Claims Act.

14. Scope of Agreement.
This Agreement incorporates all the agreements, covenants, and understandings between the parties concerning the subject matter. All such covenants, agreements, and understandings have been merged into this written Agreement. No prior Agreement or understandings, verbal or otherwise, of the parties or their agents shall be valid or enforceable unless embodied in this Agreement.

15. Terms of this Agreement.
The terms of this Agreement are lawful; performance of all duties and obligations shall conform with and do not contravene any state, local, or federal statutes, regulations, rules, or ordinances.

16. Equal Opportunity Compliance.
The parties agree to abide by all federal and state laws and rules and regulations, and executive orders of the Governor of the State of New Mexico, pertaining to equal employment opportunity. In accordance with all such laws and rules and regulations, and executive orders of the Governor of the State of New Mexico, the parties agree to assure that no person in the United States shall, on the grounds of race, color, national origin, ancestry, sex, sexual preference, age or handicap, be excluded from employment with, or participation in, any program or activity performed under this Agreement. If the parties are found to not be in compliance with these requirements during the term of this Agreement, the parties agree to take appropriate steps to correct these deficiencies.

17. Appropriations and Authorizations of State and Federal Funds.
The terms of this Agreement are contingent upon sufficient appropriations and authorizations being made by the governing board of the Sponsor, the Legislature of New Mexico, or the Congress of the United States if federal funds are involved, for performance of the Agreement. If sufficient appropriations and authorizations are not made by the Sponsor, Legislature or the Congress of the United States if federal funds are involved, this Agreement shall terminate upon written notice being given by one party to the other. The Department and the Sponsor are expressly not committed to expenditure of any funds until such time as they are programmed, budgeted, encumbered, and approved for expenditure.

18. Severability.
In the event that any portion of this Agreement is determined to be void, unconstitutional or otherwise unenforceable, the remainder of this Agreement shall remain in full force and effect.

19. Applicable Law.
The Laws of the State of New Mexico shall govern this Agreement, without giving effect to its choice of law provisions. Venue shall be proper only in a New Mexico court of competent jurisdiction in accordance with NMSA 1978, Section 38-3-1(G).

20. Principal Contacts and Notices.
The principal contacts for this Agreement are listed below. Except as otherwise specified, all notices shall be in writing (including notice by facsimile or E-mail) and shall be given to the principal contacts listed below.

Address:	New Mexico Department of Transportation - Aviation Division 3501 Access Rd C. Albuquerque, NM 87106
General Office:	(505) 795-1401
Fax:	(505) 244-1790
E-mail:	Aviation.Division@dot.nm.gov

Name	JAMES HARRIS			
Title	AIRPORT MANAGER			
Sponsor	SANTA FE, CITY OF			
Address	PO BOX 909			
City	SANTA FE	NM	Zip Code	87504
Office Phone		Fax		
E-Mail				

21. Amendment.
This Agreement shall not be altered, modified, or amended except by an instrument in writing and executed by the parties.

In witness whereof, each party is signing this Agreement on the date stated opposite of that party's signature.

NEW MEXICO DEPARTMENT OF TRANSPORTATION

By:_____ Date: _____
Cabinet Secretary or Designee

Recommended by:

By:_____ Date: _____
Aviation Division Director
or Designee

Approved as to form and legal sufficiency by the New Mexico Department of Transportation's Office of General Counsel

By:_____ Date: _____
Assistant General Counsel

SPONSOR

Print Name:_____

By:_____ Date:_____

Title: _____

Docusign Envelope ID: 2AEE3C72-8C14-4418-90CC-DC86D05E7793

EXHIBIT A

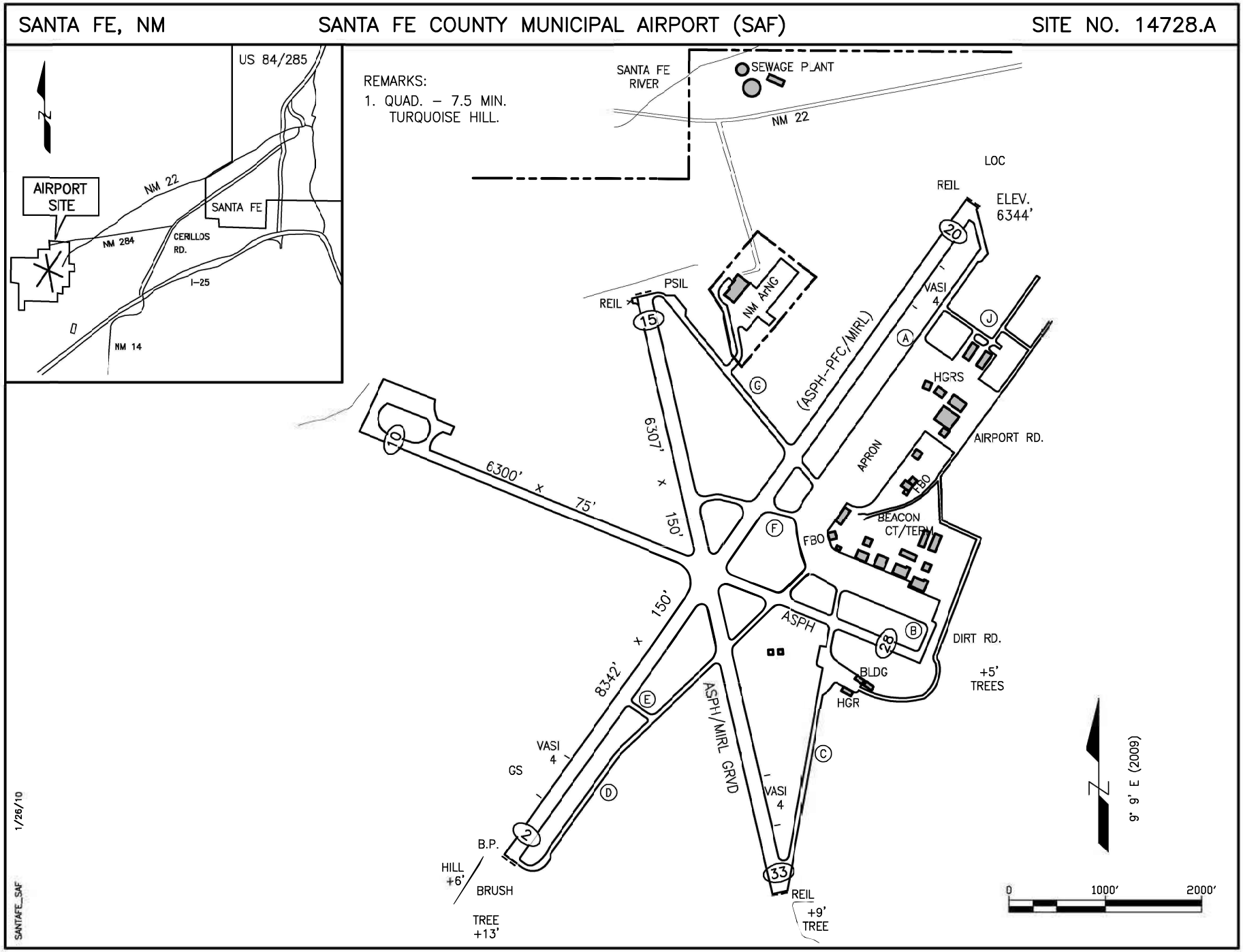

Docusign Envelope ID: 2AEE3C72-8C14-4418-90CC-DC86D05E7793

Santa Fe Municipal Airport

EXHIBIT B
PLEASE OMIT CENTS

ITEM NO.	ITEM OF WORK AND DESCRIPTION	TOTAL ESTIMATED COSTS	STATE FUNDS REQUESTED	SPONSOR FUNDS	OTHER FUNDS (FAA)
1	Design & Reconstruct North Apron	$6,000,000	$540,000	$ 60,000	$ 5,400,000
	TOTALS	$ 6,000,000	$540,000	$ 60,000	$ 5,400,000

IN WITNESS WHEREOF, the parties have agreed to this Grant Agreement as of the date when it is executed by the parties, whichever signature occurs last.

CITY OF SANTA FE:

_____
ALAN WEBBER, MAYOR

DATE: _____

ATTEST:

_____
ANDRÉA SALAZAR, CITY CLERK

CITY ATTORNEY'S OFFICE:

Kevin L. Nault
Kevin L. Nault (Dec 20, 2024 09:23 MST)
_____
ASSISTANT CITY ATTORNEY

APPROVED FOR FINANCES:

Emily K. Oster
_____
EMILY OSTER, FINANCE DIRECTOR

GB_Grant SAF-25-02

Final Audit Report 2024-12-31

Created:	2024-12-26
By:	Kelly Bynon (kabynon@santafenm.gov)
Status:	Signed
Transaction ID:	CBJCHBCAABAArAgadJWkxH2bpfMMTkj48nwpOA-N3_IS

"GB_Grant SAF-25-02" History

Document created by Kelly Bynon (kabynon@santafenm.gov)
2024-12-26 - 9:16:20 PM GMT- IP address: 63.232.20.2

Document emailed to James Harris (jcharris@santafenm.gov) for signature
2024-12-26 - 9:18:14 PM GMT

Email viewed by James Harris (jcharris@santafenm.gov)
2024-12-26 - 9:18:46 PM GMT- IP address: 63.232.20.2

Document e-signed by James Harris (jcharris@santafenm.gov)
Signature Date: 2024-12-26 - 9:19:10 PM GMT - Time Source: server- IP address: 63.232.20.2

Document emailed to ALEXIS LOTERO (aclotero@santafenm.gov) for signature
2024-12-26 - 9:19:11 PM GMT

Email viewed by ALEXIS LOTERO (aclotero@santafenm.gov)
2024-12-27 - 0:09:01 AM GMT- IP address: 104.47.64.254

Document e-signed by ALEXIS LOTERO (aclotero@santafenm.gov)
Signature Date: 2024-12-27 - 6:07:00 PM GMT - Time Source: server- IP address: 63.232.20.2

Document emailed to EMILY OSTER (ekoster@santafenm.gov) for signature
2024-12-27 - 6:07:01 PM GMT

Email viewed by EMILY OSTER (ekoster@santafenm.gov)
2024-12-31 - 2:32:44 PM GMT- IP address: 104.47.64.254

Document e-signed by EMILY OSTER (ekoster@santafenm.gov)
Signature Date: 2024-12-31 - 2:34:29 PM GMT - Time Source: server- IP address: 50.216.119.226

Agreement completed.
2024-12-31 - 2:34:29 PM GMT

Powered by Adobe Acrobat Sign

CITY OF SANTA FE

Date: January 7, 2025

To: Governing Body

Via: Melissa McDonald, Parks and Open Space Division Director MM

From: Jason Sharp, Park Ranger Superintendent JS

ACTION:
Request Approval of a Budget Amendment Resolution (BAR) to Allocate New Mexico Department of Transportation Grant Funding in the Total Amount of $95,000 to FY25 Parks and Open Space Revenue and Operating Budget to Support Litter Control and Beautification Efforts. (Jason T. Sharp, Park Ranger Superintendent; jtsharp@santafenm.gov)

BACKGROUND AND SUMMARY:
The Que Linda Beautification Program, established under the "Clean Highways Act" (NMSA 1978, Section 67-15-1 to -4), promotes litter control and beautification across New Mexico. This initiative enhances public spaces by encouraging local participation and collaboration with municipalities. The City of Santa Fe will play a key role in maintaining cleanliness and advancing beautification efforts.

The program focuses on the continuous removal of litter along roads and highways within Santa Fe. Upon execution of the resolution and grant agreement, funds will be allocated to several object accounts including a software expense for the purchase of ARCGIS to support project mapping and data management.

The grant will be approved by Governing Body, via resolution, in a separate action.

FUNDING SOURCE: New Mexico Department of Transportation (NMDOT)
Project Ledger ID Number: PRK2535506
Fund Name/Number: QOL / 255
Munis Org Name/Number: QOL PTW / 2554150
Munis Revenue Object Name/Number: NMDOT / 490150
Munis Expenditure Object Name/Number: Operating Supplies / 530200
Munis Expenditure Object Name/Number: Software / 570850
Munis Expenditure Object Name/Number: Service Contracts / 510310

ATTACHMENTS:
BAR

Log # *{Finance use only}*:	
Journal # *{Finance use only}*:	

City of Santa Fe, New Mexico
BUDGET AMENDMENT RESOLUTION (BAR)

DEPARTMENT / DIVISION NAME	DATE
Public Works / QOL Parks/Trails/Watershed	12/31/2024

ITEM DESCRIPTION	ORG	OBJECT	PROJECT	INCREASE	DECREASE
EXPENDITURES				*{enter as positive #}*	*{enter as negative #}*
Operating Supplies - Que Linda Task 1	2554150	530200	PRK2535506	35,000	
Software - Que Linda Task 2	2554150	570850	PRK2535506	10,000	
Service Contracts - Que Linda Task 3/Task 4/Task 5	2554150	510310	PRK2535506	50,000	
REVENUES				*{enter as negative #}*	*{enter as positive #}*
NMDOT - Que Linda	2554150	490150	PRK2535506	(95,000)	
				$ -	$ -

JUSTIFICATION: *(use additional page if needed)*
--Attach supporting documentation/memo

NM DOT Grant award for litter control via the Que Linda Beautification Program in the amount of $95,000. (term 6/30/2025)

{Complete section below if BAR results in a net change to ANY Fund}

Fund(s) Affected	Fund Balance Increase/(Decrease)
TOTAL:	0

{Use this form for Finance Committee/ City Council agenda items ONLY}

CITY COUNCIL APPROVAL

City Council Approval Date

Agenda Item #:

Halona Crowe	12/31/2024	Andy Hopkins	Jan 13, 2025
Prepared By *{print name}*	Date	Budget Officer	Date
Melissa McDonald	Jan 8, 2025		
Division Director Signature	Date	Finance Director *{≤ $5,000}*	Date
Regina Wheeler (Jan 13, 2025 10:41 MST)	Jan 13, 2025		
Department Director Signature	Date	City Manager *{≤ $60,000}*	Date

CITY OF SANTA FE

Date: December 3, 2024

To: Governing Body

From: Samuel Ulibarri, Parks and Open Space Division Water Resources Superintendent
Scott Overlie, Parks and Open Space Division Project Manager

Via: Regina Wheeler, Public Works Department Director RW (Dec 21, 2024 11:16 MST)
Melissa McDonald, Parks and Open Space Division Director Melissa McDonald

Subject: Marty Sanchez Golf Course and Municipal Recreation Sports Complex Irrigation and Ornamental Ponds Relining Construction.

Vendor Name: Mountain West Golfscapes, Inc.

Munis Vendor Number: 9551

ACTION:
Request for Approval of a Construction Contract with Mountain West Golfscapes, Inc. in the Total Amount of $2,213,247.69 Excluding NMGRT to Repair the Irrigation Supply and Ornamental Ponds at the Marty Sanchez Golf Course and Municipal Recreation Sports Complex for Compliance with a Corrective Action Plan. (Scott A. Overlie, Parks Project Administrator; saoverlie@santafenm.gov)

CONTRACT NUMBER:
The FY 2025 Munis contract number is 3250312.

BACKGROUND AND SUMMARY:
On November 4, 2022, the Parks and Open Space Division received an inspection determination from the New Mexico Environment Department Groundwater Bureau, where it was verbally communicated to the Division that the five ponds—four at Marty Sanchez Golf Course, one at the Municipal Recreation Sports Complex—needed to be inspected by an engineer to determine the integrity of their bentonite liners.

The ponds at the Marty Sanchez Golf Course and Municipal Recreation Sports Complex, which store reclaimed effluent water, are regulated by the New Mexico Environment Department (NMED) under a discharge permit. To maintain compliance, the ponds were inspected by a licensed civil engineer on September 28, 2023. The inspection revealed that the visible portions of the liners lacked integrity, necessitating corrective measures. In response, a Corrective Action Plan was submitted to NMED detailing the necessary steps to address these deficiencies. The plan includes re-lining the irrigation supply ponds at both the golf course and sports complex with high-density polyethylene (HDPE) liners. Additionally, the ornamental pond near the golf course clubhouse will also receive an HDPE liner, while two other ornamental ponds will be retired and converted into native pollinator habitat areas to enhance ecological value.

This project, funded through a City one-time appropriation to the MRC, is anticipated to take approximately 12 months to complete. While the golf course will remain open throughout the construction period, there may be minor disruptions to play due to the use of heavy equipment, particularly for work on the ornamental ponds. The overall project scope is subject to adjustment based on feedback from the New Mexico Environment Department (NMED). These initiatives are crucial for maintaining regulatory compliance, safeguarding environmental resources, and ensuring the long-term functionality and sustainability of these critical facilities.

TOTAL COST INCLUDING NMGRT: $2,394,457.35

ATTACHMENTS:
Contract
Proposal(s)
Cooperative Agreement
Certificate of Insurance
Letter of Determination
Horizons Letter of Declination

Prior Approvals and Supporting Information:

PROCUREMENT METHOD:
The procurement method used was NMSA 1978, Coop: Omnia PRO-JOCA-4666-21
Chief Procurement Officer (CPO) / Designee: _____ **Date:** Dec 30, 2024
CPO Comment/Exceptions: NMSA 1978, Section 13-1-135

FUNDING SOURCE:
Fund Name/Number: MUNRECCMP/530
Munis Org Name/Number: MRC CAP/5300279
Munis Object Name/Number: WIP CONST/572970

Budget Officer / Designee: _____ Date: Dec 27, 2024

Budget Officer Comment/Exceptions: _____

ASSOCIATED APPROVALS:
Does this purchase require any of the following associated approvals: ☐ Yes X No
(ITT, Vehicles/Fleet, Facilities, Asset, Grant Review**)**

IT Components included? ☐ Yes X No
Approval _____ Title: _____ Date: _____
Comment/Exceptions**:** _____

Vehicles included? ☐ Yes X No
Approval _____ Title: _____ Date: _____
Comment/Exceptions: _____

Construction, Facilities, Furniture, Equipment included? ☐ Yes X No
Approval _____ Title: _____ Date: _____
Comment/Exceptions: _____

Capital Asset * or Project**? X Yes ☐ No
Project Ledger: MRC2553002
(*will this procurement result in a tangible item that costs more than $5,000?)
(**Capital Projects are new and improvement projects that are going to cost $10,0000 or more)
Approval Josie Bolden Title: Controller Date: Dec 31, 2024
Comment/Exceptions: _____

Is this a Grant Funded Purchase? ☐ Yes X No GRT 1X allocation end of FY24
Approval _____ Title: _____ Date: _____
Comment/Exceptions: _____

Item #: _____
Munis Contract #: 3250312
Coop: Omnia PRO-JOCA-4666-21

CITY OF SANTA FE

CONSTRUCTION CONTRACT

THIS CONTRACT is made and entered into by and between the City of Santa Fe, New Mexico, hereinafter referred to as the "City," and **Mountain West Golfscapes Inc.**, hereinafter referred to as the "Contractor," and is effective as of the date set forth below upon which it is executed by the Parties.

RECITALS

WHEREAS, the City, through its Governing Body, is authorized to enter into a construction Contract for the project; and

WHEREAS, the City has procured this Contract according to the established State and Local Purchasing procedures for contracts of the type and amount; and

The City and the Contractor hereby agree as follows:

1. Scope of Work

A. The Contractor shall perform the following work:

Marty Sanchez Golf Course and MRC Irrigation Supply Ponds Re-lining.

Exhibit A- attached herein, Phase 1, Golf course pond- Irrigation Supply Pond GC-Remove sludge, shape liner subgrade, install liner and venting, install rip rap shelf, clean up and demobilize.

Exhibit B- attached herein, Phase 2, Sports Complex- Irrigation Supply Pond Sports Complex- Remove sludge, shape liner subgrade, install liner and venting, install rip rap shelf, clean up and demobilize.

Exhibit C- attached herein, Phase 3, Golf course pond- Ornamental ponds, Ponds on #10, #4 and #16:

- Pond on #10-grub, remove sludge, shape liner subgrade, install liner and venting, install rip rap shelf, clean up and demobilize.
- Ponds on #4 and #16-grub, remove sludge, no liner or rep rap, haul soil from a borrow site designated by the Parks and Open Spaces Director and on the property to fill in and compact the ponds, fine grade and shape the filled in ponds to conform to the design intent of the golf course and match the features and topography. Re-vegetative seeding by hydroseeding method of the filled ponds and the borrow site with seed mix approved by the owner. Clean up and demobilize.

The Contractor shall be responsible for verifications of all conditions, measurements, and dimensions for bidding.

The Contractor shall be responsible for all permits, fees, and State inspections associated with the construction.

B. Project: Marty Sanchez Golf Course Irrigation Supply Pond Re-lining

C. City Department: Public Works

2. **Compensation**

A. The City shall pay to the Contractor in full payment for services satisfactorily performed, such compensation not to exceed Two Million two hundred forty thousand four hundred twenty seven dollars and ninety three cents ($2,240,427.93), excluding gross receipts tax. The New Mexico gross receipts tax levied on the amounts payable under this Contract shall be paid by the City to the Contractor, as follows:

The Unit Bid Contract Total is determined as follows:

Base Bid	$2,213,247.69
Gross Receipts Tax (8.1875%)	$181,209.66
Base Bid plus NMGRT	$2,394,457.35

The total amount payable to the Contractor under this Contract, including Alternates (if needed) gross receipts tax and expenses, shall not exceed Two Million three hundred ninety four thousand four hundred fifty seven dollars and thirty five cents ($2,394,457.35). This amount is a maximum and not a guarantee that the work assigned to be performed by Contractor under this Contract shall equal the amount stated herein. The parties do not intend for the Contractor to continue to provide services without compensation when the total compensation amount is reached. Contractor is responsible for notifying the City when the services provided under this Contract reach the total compensation amount. In no event will the Contractor be paid for services provided in excess of the total compensation amount without this Contract being amended in writing prior to those services in excess of the total compensation amount being provided.

B. Payment is subject to availability of funds pursuant to the Appropriations Paragraph set forth below and to any negotiations between the parties from year to year pursuant to Paragraph 1, Scope of Work, and to approval by the City. All invoices MUST BE received by the City no later than fifteen (15) days after the termination of the Fiscal Year in which the services were delivered. Invoices received after such date WILL NOT BE PAID.

C. Contractor must submit a detailed statement accounting for all services performed and expenses incurred. If the City finds that the services are not acceptable, within thirty days after the date of receipt of written notice from the Contractor that payment is requested, it shall provide the Contractor a letter of exception explaining the defect or objection to the services, and outlining steps the Contractor may take

to provide remedial action. Upon certification by the City that the services have been received and accepted, payment shall be tendered to the Contractor within twenty-one days after the date of acceptance. If payment is made by mail, the payment shall be deemed tendered on the date it is postmarked.

D. If the City fails to pay the contractor within twenty-one days after receipt of an undisputed request for payment, the City shall pay interest to the contractor beginning on the twenty-second day after payment was due, computed at one and one-half percent of the undisputed amount per month or fraction of a month until the payment is issued. If the City receives an improperly completed invoice, the City shall notify the sender of the invoice within seven days of receipt in what way the invoice is improperly completed, and the owner has no further duty to pay on the improperly completed invoice until it is resubmitted as complete.

E. **Notice of Extended Payment Provision for Grant Funded Contracts**. This contract allows the City to make payment within 45 days after submission of an undisputed request for payment for contracts funded by grant money consistent with NMSA 1978, sec. 57-28-5(B).

3. Term

THIS CONTRACT SHALL NOT BECOME EFFECTIVE UNTIL APPROVED IN WRITING BY THE CITY. This contract shall terminate **three (3) years from date of final signature**. The City reserves the right to renew this contract on an annual basis by mutual agreement not to exceed a total of ten (10) years in accordance with NMSA 1978, Sections 13-1-150 through 152.

4. Termination

A. Grounds. The City may terminate this Contract for convenience or cause. For contracts within their authority, the City Manager or their designee is authorized to provide the notice of termination, otherwise such notice of termination shall be provided by the Mayor or their designee as authorized by the Governing Body. The Contractor may only terminate this Contract based upon the City's uncured, material breach of this Contract.

B. Notice; City Opportunity to Cure.

1) Except as otherwise provided in Paragraphs 7.A and 17, the City shall give Contractor written notice of termination at least thirty (30) days prior to the intended date of termination.

2) Contractor shall give City written notice of termination at least thirty (30) days prior to the intended date of termination, which notice shall (i) identify all the City's material breaches of this Contract upon which the termination is based and (ii) state what the City must do to cure such material breaches. Contractor's notice of termination shall only be effective (i) if the City does not cure all material breaches within the thirty (30) day notice period or (ii) in the case of material breaches that cannot be cured within thirty (30) days, the City does not, within the thirty (30) day notice period, notify the Contractor of its intent to cure and begin with due diligence to cure the material breach.

3) Notwithstanding the foregoing, this Contract may be terminated immediately upon written notice to the Contractor (i) if the Contractor becomes unable to perform the services contracted for, as determined by the City; (ii) if, during the term of this Contract, the Contractor is suspended or debarred by the City; or (iii) the Contract is terminated pursuant to Paragraph 5, "Appropriations," of this Contract.

C. Liability. Except as otherwise expressly allowed or provided under this Contract, the City's sole liability upon termination shall be to pay for acceptable work performed prior to the Contractor's receipt or issuance of a notice of termination; provided, however, that a notice of termination shall not nullify or

otherwise affect either party's liability for pre-termination defaults under or breaches of this Contract. The Contractor shall submit an invoice for such work within thirty (30) days of receiving or sending the notice of termination. *THIS PROVISION IS NOT EXCLUSIVE AND DOES NOT WAIVE THE CITY'S OTHER LEGAL RIGHTS AND REMEDIES CAUSED BY THE CONTRACTOR'S DEFAULT/BREACH OF THIS CONTRACT.*

5. Appropriations

The terms of this Contract are contingent upon sufficient appropriations and authorization being made by the Governing Body for the performance of this Contract. If sufficient appropriations and authorization are not made by the Governing Body, this Contract shall terminate immediately upon written notice being given by the City to the Contractor. The City's decision as to whether sufficient appropriations are available shall be accepted by the Contractor and shall be final. If the City proposes an amendment to the Contract to unilaterally reduce funding, the Contractor shall have the option to terminate the Contract or to agree to the reduced funding, within thirty (30) days of receipt of the proposed amendment.

6. Status of Contractor

The Contractor and its agents and employees are independent contractors performing construction services for the City and are not employees of the City. The Contractor and its agents and employees shall not accrue leave, retirement, insurance, bonding, use of City vehicles, or any other benefits afforded to employees of the City as a result of this Contract. The Contractor acknowledges that all sums received hereunder are reportable by the Contractor for tax purposes, including without limitation, self-employment and business income tax. The Contractor agrees not to purport to bind the City unless the Contractor has express written authority to do so, and then only within the strict limits of that authority.

7. Construction Contract Performance and Payment Bond

A. When a construction contract is awarded in excess of twenty-five thousand dollars ($25,000), the following bonds or security shall be delivered to the City and shall become binding on the parties upon the execution of the contract. If the Contractor fails to deliver the required performance and payment bonds, the Contractor's bid shall be rejected, its bid security shall be enforced to the extent of actual damages. Award of the contract shall be made pursuant to the Procurement Code in the following manner:

(1) a performance bond satisfactory to the City, executed by a surety company authorized to do business in this state and said surety to be approved in federal circular 570 as published by the United States treasury department or the state board of finance or the local governing authority, in an amount equal to one hundred percent of the price specified in the contract; and

(2) a payment bond satisfactory to the City, executed by a surety company authorized to do business in this state and said surety to be approved in federal circular 570 as published by the United States treasury department or the state board of finance or the local governing authority, in an amount equal to one hundred percent of the price specified in the contract, for the protection of all persons supplying labor and material to the contractor or its subcontractors for the performance of the work provided for in the contract.

B. A subcontractor shall provide a performance and payment bond on a public works building project if the subcontractor's contract for work to be performed on a project is one hundred twenty-five thousand dollars ($125,000) or more.

8. Assignment

The Contractor shall not assign or transfer any interest in this Contract or assign any claims for money due or to become due under this Contract without the prior written approval of the City.

9. Subcontracting

The Contractor shall not subcontract any portion of the services to be performed under this Contract without the prior written approval of the City. No such subcontract shall relieve the primary Contractor from its obligations and liabilities under this Contract, nor shall any subcontract obligate direct payment from the City.

10. Release

Final payment of the amounts due under this Contract shall operate as a release of the City, its officers and employees from all liabilities, claims and obligations whatsoever arising from or under this Contract.

11. Confidentiality

Any confidential information provided to or developed by the Contractor in the performance of this Contract shall be kept confidential and shall not be made available to any individual or organization by the Contractor without the prior written approval of the City.

12. Product of Service -- Copyright

All materials developed or acquired by the Contractor under this Contract shall become the property of the City and shall be delivered to the City no later than the termination date of this Contract. Nothing developed or produced, in whole or in part, by the Contractor under this Contract shall be the subject of an application for copyright or other claim of ownership by or on behalf of the Contractor.

13. Conflict of Interest; Governmental Conduct Act

A. The Contractor represents and warrants that it presently has no interest and, during the term of this Contract, shall not acquire any interest, direct or indirect, which would conflict in any manner or degree with the performance or services required under the Contract.

B. The Contractor further represents and warrants that it has complied with, and, during the term of this Contract, will continue to comply with, and that this Contract complies with all applicable provisions of the Governmental Conduct Act, Chapter 10, Article 16 NMSA 1978.

C. Contractor's representations and warranties in Paragraphs A and B of this Article 12 are material representations of fact upon which the City relied when this Contract was entered into by the parties. Contractor shall provide immediate written notice to the City if, at any time during the term of this Contract, Contractor learns that Contractor's representations and warranties in Paragraphs A and B of this Article 12 were erroneous on the effective date of this Contract or have become erroneous by reason of new or changed circumstances. If it is later determined that Contractor's representations and warranties in Paragraphs A and B of this Article 12 were erroneous on the effective date of this Contract or have become erroneous by reason of new or changed circumstances, in addition to other remedies available to the City and notwithstanding anything in the Contract to the contrary, the City may immediately terminate the Contract.

D. All terms defined in the Governmental Conduct Act have the same meaning in this section.

14. Amendment

A. This Contract shall not be altered, changed or amended except by instrument in writing executed by the parties hereto and all other required signatories.

B. If the City proposes an amendment to the Contract to unilaterally reduce funding due to budget or other considerations, the Contractor shall, within thirty (30) days of receipt of the proposed Amendment, have the option to terminate the Contract, pursuant to the termination provisions as set forth in Article 4 herein, or to agree to the reduced funding.

15. Change Orders

A. Changes. The Contractor may only make changes or revisions within the Scope of Work as defined by Article 1 and/or Exhibit 1 after receipt of written approval by the City Manager or his/her designee. Such change may only be made to Tasks or Sub-Task as defined in the Scope of Work. Under no circumstance shall such change affect the:

1) Deliverable requirements, as outlined in the Scope of Work;
2) Due date of any Deliverable, as outlined in the Scope of Work;
3) Compensation of any Deliverable, as outlined in the Scope of Work;
4) Contract compensation, as outlined in Article 2; or
5) Contract termination, as outlined in Article 4.

B. Change Request Process. In the event that circumstances warrant a change to accomplish the Scope of Work as described above, a Change Request shall be submitted that meets the following criteria:

1) The Project Manager shall draft a written Change Request for review and approval by the City Manager to include:
   (a) the name of the person requesting the change;
   (b) a summary of the required change;
   (c) the start date for the change;
   (d) the reason and necessity for change;
   (e) the elements to be altered; and
   (f) the impact of the change.

2. The City Manager shall provide a written decision on the Change Request to the Contractor within a maximum of ten (10) Business Days of receipt of the Change Request. All decisions made by the City Manager are final. Change Requests, once approved, become a part of the Contract, and become binding as a part of the original Contract.

16. Merger

This Contract incorporates all the agreements, covenants, and understandings between the parties hereto concerning the subject matter hereof, and all such covenants, agreements and understandings have been merged into this written contract.

Cooperative 13-1-135 This Contract is issued against the University of New Mexico Master Agreement PROJOCA, established and maintained by OMNIA Partners, and through this language hereby incorporates this Contract by reference and is included in the order of precedence.

No prior Agreement or understanding, oral or otherwise, of the parties or their agents shall be valid or enforceable unless embodied in this Contract.

17. Penalties for violation of law

NMSA 1978, sections 13-1-28 through 13-1-199, imposes civil and criminal penalties for its violation. In addition, the New Mexico criminal statutes impose felony penalties for illegal bribes, gratuities and kickbacks.

18. Equal Opportunity Compliance

The Contractor agrees to abide by all federal and state laws and rules and regulations, and Santa Fe City Code, pertaining to equal employment opportunity. In accordance with all such laws of the State of New Mexico, the Contractor assures that no person in the United States shall, on the grounds of race, religion, color, national origin, ancestry, sex, age, physical or mental handicap, or serious medical condition, spousal affiliation, sexual orientation or gender identity, be excluded from employment with or participation in, be denied the benefits of, or be otherwise subjected to discrimination under any program or activity performed under this Contract. If Contractor is found not to be in compliance with these requirements during the life of this Contract, Contractor agrees to take appropriate steps to correct these deficiencies.

19. Applicable Law

The laws of the State of New Mexico shall govern this Contract, without giving effect to its choice of law provisions. Venue shall be proper only in a New Mexico court of competent jurisdiction in accordance with NMSA 1978, section 38-3-2. By execution of this Contract, Contractor acknowledges and agrees to the jurisdiction of the courts of the State of New Mexico over any and all lawsuits arising under or out of any term of this Contract.

20. Workers Compensation

The Contractor agrees to comply with state laws and rules applicable to workers compensation benefits for its employees. If the Contractor fails to comply with the Workers Compensation Act and applicable rules when required to do so, this Contract may be terminated by the City.

21. Other Insurance

If the services contemplated under this Contract will be performed on or in City facilities or property, Contractor shall maintain in force during the entire term of this Contract, the following insurance coverage(s), naming the City as additional insured.

A. **Commercial General Liability** insurance shall be written on an occurrence basis and be a broad as ISO Form CG 00 01 with limits not less than $2,000,000 per occurrence and $2,000,000 in the aggregate for claims against bodily injury, personal and advertising injury, and property damage. Said policy shall include broad form Contractual Liability coverage and be endorsed to name the City of Santa Fe their officials, officers, employees, and agents as additional insureds.

B. **Business Automobile Liability** insurance for all owned, non-owned automobiles, with a combined single limit not less than $1,000,000 per accident.

C. **Broader Coverage and Limits**. The insurance requirements under this Contract shall be the greater of (1) the minimum coverage and limits specified in this Contract, or (2) the broader coverage and maximum limits of coverage of any insurance policy or proceeds available to the Named Insured. It is agreed that these insurance requirements shall not in any way act to reduce coverage that is broader or that includes higher limits than the minimums required herein. No representation is made that the minimum insurance requirements of this Contract are sufficient to cover the obligations of Contractor hereunder.

D. Contractor shall maintain the above insurance for the term of this Contract and name the City as an additional insured and provide for 30 days cancellation notice on any Certificate of Insurance form furnished by Contractor. Such certificate shall also specifically state the coverage provided under the policy is primary over any other valid and collectible insurance and provide a waiver of subrogation.

22. Records and Financial Audit

The Contractor shall maintain detailed time and expenditure records that indicate the date; time, nature and cost of services rendered during the Contract's term and effect and retain them for a period of three (3) years from the date of final payment under this Contract. The records shall be subject to inspection by the City. The City shall have the right to audit billings both before and after payment. Payment under this Contract shall not foreclose the right of the City to recover excessive or illegal payments

23. Indemnification

The Contractor shall defend, indemnify and hold harmless the City from all actions, proceeding, claims, demands, costs, damages, attorneys' fees and all other liabilities and expenses of any kind from any source which may arise out of the performance of this Contract, caused by the negligent act or failure to act of the Contractor, its officers, employees, servants, subcontractors or agents, or if caused by the actions of any client of the Contractor resulting in injury or damage to persons or property during the time when the Contractor or any officer, agent, employee, servant or subcontractor thereof has or is performing services pursuant to this Contract. In the event that any action, suit or proceeding related to the services performed by the Contractor or any officer, agent, employee, servant or subcontractor under this Contract is brought against the Contractor, the Contractor shall, as soon as practicable but no later than two (2) days after it receives notice thereof, notify the legal counsel of the City.

24. New Mexico Tort Claims Act

Any liability incurred by the City of Santa Fe in connection with this Contract is subject to the immunities and limitations of the New Mexico Tort Claims Act, Section 41-4-1, et. seq. NMSA 1978, as amended. The City and its "public employees" as defined in the New Mexico Tort Claims Act, do not waive sovereign immunity, do not waive any defense and do not waive any limitation of liability pursuant to law. No provision in this Contract modifies or waives any provision of the New Mexico Tort Claims Act.

25. Invalid Term or Condition

If any term or condition of this Contract shall be held invalid or unenforceable, the remainder of this Contract shall not be affected and shall be valid and enforceable.

26. Enforcement of Contract

A party's failure to require strict performance of any provision of this Contract shall not waive or diminish that party's right thereafter to demand strict compliance with that or any other provision. No waiver by a party of

any of its rights under this Contract shall be effective unless express and in writing, and no effective waiver by a party of any of its rights shall be effective to waive any other rights.

27. Notices

Any notice required to be given to either party by this Contract shall be in writing and shall be delivered in person, by courier service or by U.S. mail, either first class or certified, return receipt requested, postage prepaid, as follows:

To the City:	Melissa A. McDonald, Parks and Open Space Division Director PO Box 909 Santa Fe, NM 87504-0909 mamcdonald@santafenm.gov 505-303-9502
To the Contractor:	Mountain West Golfscapes, Inc. PO Box 1630 Peralta, NM 87042 john@mwgs.us 505-869-9019

28. Authority

If Contractor is other than a natural person, the individual(s) signing this Contract on behalf of Contractor represents and warrants that he or she has the power and authority to bind Contractor, and that no further action, resolution, or approval from Contractor is necessary to enter into a binding contract.

29. Progress Payments

Based upon Application for Payment submitted to the City by the Contractor and Certificates for Payment issued by the City, the City shall make progress payments on account of the Contract sum to the Contractor as provided in the Contract documents for the period ending the last day of the month as follows:

Not later than twenty-one (21) days following the end of the period covered by the Application for Payment, one hundred percent (100%) of the portion of the Contract Sum properly allocable to labor, materials, and equipment incorporated in the work and one hundred percent (100%) of the portion of the Contract sum properly allocable to materials and equipment suitably stored at the site or some other location agreed upon in writing for the period covered by the Application for Payment, less the aggregate of previous payments made by the City; and upon substantial completion of the entire work, a sum sufficient to increase the total payments to one hundred percent (100%) of the Contract sum, less such amounts as the City shall determine for all incomplete work and unsettled claims as provided in the Contract documents.

[Reserved]

30. Final Payment

Final payment, constituting the entire unpaid balance of the Contract sum, unless it is a disputed payment, shall be paid by the City to the Contractor within twenty-one (21) calendar days, after all deficiencies to the Contract document that were noted during the Substantial Completion Inspection and listed on the attachment to the Certificate of Substantial Completion have been corrected, and provided the Contract has been fully performed

and a final Certificate for Payment has been issued by the City. In addition, the Contractor shall provide to the City a certified statement of Release of Lien (AIA Document G706A or approved form), Consent of Surety, Warranty from Prime Contractor, Warranties from Suppliers and Manufacturers, training sessions, equipment/operating manuals, and as-built drawings.

31. Schedule

The Contractor shall, within five (5) days after the effective date of Notice to Proceed, prepare and submit a progress schedule covering project operations for the 30-day Contract period. This progress schedule shall be of the type generally referred to as a Critical Path Method (CPM), Critical Path Schedule (CPS), and Critical Path Analysis (CPA), and other similar designations. The CPM shall be used to control the timing and sequences of the project. All work shall be done in accordance with the CPM Planning and Scheduling. A written statement of explanation shall be submitted with the progress schedule. All costs incurred by the contractor to implement the CPM shall be borne by the Contractor and are part of their Contract.

32. General and Special Provisions

A. Terms used in this Contract which are defined in the Conditions of the Contract shall have the meanings designated in those Conditions.

B. An enumeration of the Contractor's General Comprehensive Liability Insurance requirements appears in the General Conditions of the Contract for construction. Insurance requirements are also described in the Instructions to the Bidder section of the Project Manual. Contractor shall maintain adequate insurance in at least the maximum amounts, which the City could be liable under the New Mexico Tort Claims Act and shall provide proof of such insurance coverage to the City. It is the sole responsibility of the Contractor to comply with the law.

C. This Contract shall not become effective until: (1) approved by the Governing Body; and (2) signed by all parties required to sign this Contract.

D. The Contractor shall maintain detailed time records which indicate the date, time and nature of services rendered. These records shall be subject to inspection by the City, the Department of Finance and Administration and the State Auditor. The City shall have the right to audit billings both before and after payment. Payment under this Contract shall not foreclose the right of the City to recover excessive illegal payments.

E. The Contractor warrants that the Contractor presently has no interest and shall not acquire any interest, direct or indirect, which would conflict in any manner or degree with the performance or services required under this Contract.

F. The Contractor hereby warrants that the Contractor complies with the Americans with Disabilities Act, 29 CFR 1630.

G. Gender, Singular/Plural. Words of any gender used in this Contract shall be held and construed to include any other gender, and words in the singular number shall be held to include the plural, unless the context otherwise requires.

H. Captions and Section Headings. The captions and section headings contained in this Contract are for convenience of reference only, and in no way limit, define, or enlarge the terms, scope, and conditions of this Contract.

I. Certificates and Documents Incorporated. All certificates and documentation required by the provisions of the Contract shall be attached to this Contract at the time of execution and are hereby incorporated by reference as though set forth in full in this Contract to the extent they are consistent with its conditions and terms.

J. Separability. If any clause or provision of this Contract is illegal, invalid or unenforceable under present or future laws effective during the term of this Contract, then and in that event, it is the intention of the parties hereto that the remainder of this Contract shall not be affected thereby.

K. Words and Phrases. Words, phrases, and abbreviations, which have well-known technical or trade meanings used in the Contract documents shall be used according to such recognized meaning. In the event of a conflict, the more stringent meaning shall govern.

L. Relationship of Contract Documents. The Contract Documents are complementary, and any requirement of one Contract Document shall be as binding as if required by all.

M. Pursuant to NMSA 1978, section 13-1-191, reference is hereby made to the Criminal Laws of New Mexico (including NMSA 1978, sections 30-14-1, 30-24-2, and 30-41-1 through 30-41-3) which prohibit bribes, kickbacks, and gratuities, violation of which constitutes a felony. Further, the Procurement Code (NMSA 1978, sections 13-1-28 through 13-1-199) imposes civil and criminal penalties for its violation.

N. Pursuant to NMSA 1978, section 13-4-11. Reference is hereby made to the Minimum Wage on Public Works; weekly payments; posting wage scale; withholding funds.

IN WITNESS WHEREOF, the Parties have executed this Contract as of the date of the signature by the required approval authorities below.

CITY OF SANTA FE:

_____
ALAN WEBBER, MAYOR

DATE: _____

CONTRACTOR:
Mountain West Golfscapes Inc

JOHN MONDRAGON
JOHN MONDRAGON (Dec 5, 2024 12:50 MST)
JOHN MONDRAGON, PRESIDENT

DATE: Dec 5, 2024

NMBTIN#: 850479875

ATTEST:

_____
ANDRÉA SALAZAR, CITY CLERK

CITY ATTORNEY'S OFFICE:

Kevin L. Nault
Kevin L. Nault (Dec 5, 2024 14:14 MST)
ASSISTANT CITY ATTORNEY

APPROVED FOR FINANCES:

Emily K. Oster
EMILY OSTER, FINANCE DIRECTOR

EXHIBIT A

Detailed Scope of Work

Date:	11/4/2024
Work Order #:	134461.00
Title:	Marty Sanchez Golf Course Phase 1 - Golf Course Pond
Contractor:	Mountain West Golfscapes Inc
Contractor Number:	PRO-JOCA-4666-21
Job Order Value:	$608,697.84

Location: City of Santa Fe

Detailed Scope:

Irrigation Supply Pond GC-Remove sludge, shape liner subgrade, install liner and venting, install rip rap shelf, clean up and demobilize.



Contractor Price Proposal Details - CSI

Date: 11/4/2024

Work Order #: 134461.00

Title: Marty Sanchez Golf Course Phase 1 - Golf Course Pond

Contractor: Mountain West Golfscapes Inc

Contractor Number: PRO-JOCA-4666-21

Job Order Value: $608,697.84

Proposal Name: Phase 1 - Golf Course Pond

Proposal Value: $608,697.84

	CSI Number	Mod	UOM	Description					LineTotal
1	0100000000001		CY	Waste Hauler					$50,400.00
			NPP Tasks		Qty		Unit Price	Factor	Total
				Installation	7,500.000	X	$4.20	X 1.6000	$50,400.00
2	3200000000004		E/A	60-mil HDPE Liner - Irrigation Pond					$57,984.00
			NPP Tasks		Qty		Unit Price	Factor	Total
				Installation	1.000	X	$36,240.00	X 1.6000	$57,984.00
3	3200000000005		E/A	Irrigation pond 10 oz Geotextile Venting					$30,008.00
			NPP Tasks		Qty		Unit Price	Factor	Total
				Installation	1.000	X	$18,755.00	X 1.6000	$30,008.00
								Subtotal for :	**$138,392.00**
01 - General Requirements									
4	01 22 16 00-0004		EA	New Mexico Gross Receipts Tax – Varies by County					$39,156.00
					Qty		Unit Price	Factor	Total
				Installation	39,156.000	X	$1.00	X 1.0000	$39,156.00
				Contractor Notes: *Tax Rate @ 6.875%*					
5	01 22 20 00-0015		HR	LaborerFor tasks not included in the Construction Task Catalog® and as directed by owner only.					$112,585.05
					Qty		Unit Price	Factor	Total
				Installation	2,100.000	X	$32.39	X 1.6552	$112,585.05
				Contractor Notes: *Labor to install HDPE liner and Venting*					

[redacted]

	CSI Number	Mod	UOM	Description	LineTotal
01 - General Requirements					
6	01 71 13 00-0003		EA	Equipment Delivery, Pickup, Mobilization And Demobilization Using A Tractor Trailer With Up To 53' BedIncludes loading, tie-down of equipment, delivery of equipment, off loading on site, rigging, dismantling, loading for return and transporting away. For equipment such as bulldozers, motor scrapers, hydraulic excavators, gradalls, road graders, loader-backhoes, heavy duty construction loaders, tractors, pavers, rollers, bridge finishers, straight mast construction forklifts, telescoping boom rough terrain construction forklifts, telescoping and articulating boom man lifts with >40' boom lengths, etc.	$11,856.26
				Qty Unit Price Factor Total	
				Installation 6.000 X $1,193.84 X 1.6552 $11,856.26	
7	01 74 19 00-0039		CYM	Hauling On Paved Roads, Miles Over Initial 15 Miles	$16,191.99
				Qty Unit Price Factor Total	
				Installation 22,750.000 X $0.43 X 1.6552 $16,191.99	
				Contractor Notes: *Haul of Rip Rap*	
				Subtotal for 01 - General Requirements:	**$179,789.30**
03 - Concrete					
8	03 11 13 00-0073		LF	18" Diameter Round Fiber Tube Formwork	$379.37
				Qty Unit Price Factor Total	
				Installation 12.000 X $19.10 X 1.6552 $379.37	
9	03 21 11 00-0050		LF	#4, Grade 60, Columns, Steel Reinforcement Bar	$89.38
				Qty Unit Price Factor Total	
				Installation 60.000 X $0.90 X 1.6552 $89.38	
10	03 31 13 00-0058		CY	18" Square Or Round, By Concrete Pump, Place 3,000 PSI Concrete ColumnsExcludes pumping equipment.	$1,210.28
				Qty Unit Price Factor Total	
				Installation 4.000 X $182.80 X 1.6552 $1,210.28	
11	03 31 13 00-0058	0042	MOD	For Up To 20, Add	$79.25
				Qty Unit Price Factor Total	
				Installation 4.000 X $11.97 X 1.6552 $79.25	
12	03 31 13 00-0087		CY	Delivery Fee For Small Concrete Purchases (Short Load) Per CY For Each CY Less Than 9 CYThe task quantity is 9 minus the number of CY's delivered. For example, the delivery fee for 2CY's is: (9-2) = 7.	$261.11
				Qty Unit Price Factor Total	
				Installation 5.000 X $31.55 X 1.6552 $261.11	
				Subtotal for 03 - Concrete:	**$2,019.39**
31 - Earthwork					
13	31 05 16 00-0021		CY	3" To 7" Surge Stone Graded Aggregate Fill	$33,051.03
				Qty Unit Price Factor Total	
				Installation 400.000 X $49.92 X 1.6552 $33,051.03	

[redacted]

	CSI Number	Mod	UOM	Description	LineTotal
31 - Earthwork					
14	31 05 16 00-0021	0054	MOD	For >96, Deduct	($5,329.74)
				Qty Unit Price Factor Total	
				Installation 400.000 X ($8.05) X 1.6552 ($5,329.74)	
15	31 23 16 13-0003		CY	Over 12" Wide, Excavation for Trenching by Machine in Soil	$1,954.46
				Qty Unit Price Factor Total	
				Installation 240.000 X $4.92 X 1.6552 $1,954.46	
16	31 23 16 13-0003	0059	MOD	For >50 To 250, Add	$488.62
				Qty Unit Price Factor Total	
				Installation 240.000 X $1.23 X 1.6552 $488.62	
17	31 23 16 13-0010		CY	Backfilling or Placing Subbase for Trenches with Imported or Stockpiled Materials by Machine	$897.78
				Qty Unit Price Factor Total	
				Installation 240.000 X $2.26 X 1.6552 $897.78	
18	31 23 16 13-0010	0064	MOD	For >50 To 250, Add	$226.43
				Qty Unit Price Factor Total	
				Installation 240.000 X $0.57 X 1.6552 $226.43	
19	31 23 16 13-0013		CY	Compaction of Fill or Subbase for Trenches by Vibratory Plate, Air Tamper, Etcetera	$1,175.85
				Qty Unit Price Factor Total	
				Installation 240.000 X $2.96 X 1.6552 $1,175.85	
20	31 23 16 13-0013	0069	MOD	For >50 To 250, Add	$293.96
				Qty Unit Price Factor Total	
				Installation 240.000 X $0.74 X 1.6552 $293.96	
21	31 23 16 33-0003		CY	Bulk Excavation by Hydraulic Excavator, Front End Loader, Backhoe in Soil	$52,436.74
				Qty Unit Price Factor Total	
				Installation 8,000.000 X $3.96 X 1.6552 $52,436.74	
22	31 23 16 33-0003	0002	MOD	For Excavation In Heavy/Wet Material (Class C), Add	$19,614.12
				Qty Unit Price Factor Total	
				Installation 7,500.000 X $1.58 X 1.6552 $19,614.12	
23	31 23 16 33-0020		CY	Loading Excess Material For Removal From Bulk Excavation	$54,422.98
				Qty Unit Price Factor Total	
				Installation 8,000.000 X $4.11 X 1.6552 $54,422.98	
24	31 23 16 33-0020	0004	MOD	For >1,000, Deduct	($7,696.68)
				Qty Unit Price Factor Total	
				Installation 7,500.000 X ($0.62) X 1.6552 ($7,696.68)	
25	31 23 16 36-0026		SY	Finish Grading For Building Foundations And Other Structures by Hand	$83,578.50

[redacted]

	CSI Number	Mod	UOM	Description					LineTotal
31 - Earthwork									
					Qty		Unit Price	Factor	Total
				Installation	11,025.000	X	$4.58	X 1.6552	$83,578.50
26	31 37 13 00-0008		CY	3/8 To 1/4 CY Pieces Random, Dumped From Truck, Machine Spread And Placed Slope Protection (Keyed) Rip Rap					$53,383.10
					Qty		Unit Price	Factor	Total
				Installation	355.000	X	$90.85	X 1.6552	$53,383.10
								Subtotal for 31 - Earthwork:	**$288,497.15**
								Grand Total:	**$608,697.84**

This work order proposal total represents the correct total for the proposal. Any discrepancy between line totals, sub-totals and the proposal total is due to rounding of the line totals and sub-totals.

The Percent of NPP on this Proposal: 22.74

EXHIBIT B

Detailed Scope of Work

Date:	11/5/2024
Work Order #:	135845.00
Title:	Marty Sanchez Phase 2 - Sports Complex Pond
Contractor:	Mountain West Golfscapes Inc
Contractor Number:	PRO-JOCA-4666-21
Job Order Value:	$585,359.14

Location: City of Santa Fe

Detailed Scope:

Irrigation Supply Pond Sports Complex-Remove sludge, shape liner subgrade, install liner and venting, install rip rap shelf, clean up and demobilize.



Contractor Price Proposal Details - CSI

Date: 11/5/2024

Work Order #: 135845.00

Title: Marty Sanchez Phase 2 - Sports Complex Pond

Contractor: Mountain West Golfscapes Inc

Contractor Number: PRO-JOCA-4666-21

Job Order Value: $585,359.14

Proposal Name: Phase 2 - Sports Complex Pond

Proposal Value: $585,359.14

	CSI Number	Mod	UOM	Description					LineTotal
1	0100000000001		CY	Waste Hauler					$41,664.00
			NPP Tasks		Qty		Unit Price	Factor	Total
				Installation	6,200.000	X	$4.20	X 1.6000	$41,664.00
2	3200000000006		E/A	Soccer Pond 60 HDPE Supply Only					$51,171.20
			NPP Tasks		Qty		Unit Price	Factor	Total
				Installation	1.000	X	$31,982.00	X 1.6000	$51,171.20
3	3200000000007		E/A	Soccer pond 10oz Geotextile Venting					$25,953.60
			NPP Tasks		Qty		Unit Price	Factor	Total
				Installation	1.000	X	$16,221.00	X 1.6000	$25,953.60
								Subtotal for :	**$118,788.80**
01 - General Requirements									
4	01 22 16 00-0004		EA	New Mexico Gross Receipts Tax – Varies by County					$37,654.68
					Qty		Unit Price	Factor	Total
				Installation	37,654.680	X	$1.00	X 1.0000	$37,654.68
				Contractor Notes: *Tax Rate @ 6.8750%*					
5	01 22 20 00-0015		HR	LaborerFor tasks not included in the Construction Task Catalog® and as directed by owner only.					$107,223.86
					Qty		Unit Price	Factor	Total
				Installation	2,000.000	X	$32.39	X 1.6552	$107,223.86
				Contractor Notes: *Labor to install HDPE liner and Venting*					

[redacted]

	CSI Number	Mod	UOM	Description	LineTotal
01 - General Requirements					
6	01 71 13 00-0003		EA	Equipment Delivery, Pickup, Mobilization And Demobilization Using A Tractor Trailer With Up To 53' BedIncludes loading, tie-down of equipment, delivery of equipment, off loading on site, rigging, dismantling, loading for return and transporting away. For equipment such as bulldozers, motor scrapers, hydraulic excavators, gradalls, road graders, loader-backhoes, heavy duty construction loaders, tractors, pavers, rollers, bridge finishers, straight mast construction forklifts, telescoping boom rough terrain construction forklifts, telescoping and articulating boom man lifts with >40' boom lengths, etc.	$11,856.26
				Qty Unit Price Factor Total	
				Installation 6.000 X $1,193.84 X 1.6552 $11,856.26	
7	01 74 19 00-0038		CYM	Hauling On Paved Roads, First 15 Miles	$430.35
				Qty Unit Price Factor Total	
				Installation 400.000 X $0.65 X 1.6552 $430.35	
				Contractor Notes: *Haul of removed trees*	
8	01 74 19 00-0039		CYM	Hauling On Paved Roads, Miles Over Initial 15 Miles	$18,505.14
				Qty Unit Price Factor Total	
				Installation 26,000.000 X $0.43 X 1.6552 $18,505.14	
				Contractor Notes: *Haul of Rip Rap*	
				Subtotal for 01 - General Requirements:	**$175,670.29**
03 - Concrete					
9	03 11 13 00-0073		LF	18" Diameter Round Fiber Tube Formwork	$379.37
				Qty Unit Price Factor Total	
				Installation 12.000 X $19.10 X 1.6552 $379.37	
10	03 21 11 00-0050		LF	#4, Grade 60, Columns, Steel Reinforcement Bar	$89.38
				Qty Unit Price Factor Total	
				Installation 60.000 X $0.90 X 1.6552 $89.38	
11	03 31 13 00-0058		CY	18" Square Or Round, By Concrete Pump, Place 3,000 PSI Concrete ColumnsExcludes pumping equipment.	$1,210.28
				Qty Unit Price Factor Total	
				Installation 4.000 X $182.80 X 1.6552 $1,210.28	
12	03 31 13 00-0058	0042	MOD	For Up To 20, Add	$79.25
				Qty Unit Price Factor Total	
				Installation 4.000 X $11.97 X 1.6552 $79.25	
13	03 31 13 00-0087		CY	Delivery Fee For Small Concrete Purchases (Short Load) Per CY For Each CY Less Than 9 CYThe task quantity is 9 minus the number of CY's delivered. For example, the delivery fee for 2CY's is: (9-2) = 7.	$261.11
				Qty Unit Price Factor Total	
				Installation 5.000 X $31.55 X 1.6552 $261.11	
				Subtotal for 03 - Concrete:	**$2,019.39**



	CSI Number	Mod	UOM	Description	LineTotal
31 - Earthwork					
14	31 05 16 00-0021		CY	3" To 7" Surge Stone Graded Aggregate Fill	$33,051.03
				Qty Unit Price Factor Total	
				Installation 400.000 X $49.92 X 1.6552 $33,051.03	
15	31 05 16 00-0021	0054	MOD	For >96, Deduct	($5,329.74)
				Qty Unit Price Factor Total	
				Installation 400.000 X ($8.05) X 1.6552 ($5,329.74)	
16	31 13 13 00-0004		EA	>12" To 24" D.B.H. (Diameter At Breast Height) Tree RemovalIncludes cutting up tree, chipping and loading.	$22,313.42
				Qty Unit Price Factor Total	
				Installation 20.000 X $674.04 X 1.6552 $22,313.42	
17	31 13 13 00-0012		EA	>24" To 36" Diameter Stump RemovalIncludes excavation necessary to remove stump and loading.	$9,442.59
				Qty Unit Price Factor Total	
				Installation 20.000 X $285.24 X 1.6552 $9,442.58	
18	31 23 16 13-0003		CY	Over 12" Wide, Excavation for Trenching by Machine in Soil	$1,628.72
				Qty Unit Price Factor Total	
				Installation 200.000 X $4.92 X 1.6552 $1,628.72	
19	31 23 16 13-0003	0059	MOD	For >50 To 250, Add	$407.18
				Qty Unit Price Factor Total	
				Installation 200.000 X $1.23 X 1.6552 $407.18	
20	31 23 16 13-0010		CY	Backfilling or Placing Subbase for Trenches with Imported or Stockpiled Materials by Machine	$748.15
				Qty Unit Price Factor Total	
				Installation 200.000 X $2.26 X 1.6552 $748.15	
21	31 23 16 13-0010	0064	MOD	For >50 To 250, Add	$188.69
				Qty Unit Price Factor Total	
				Installation 200.000 X $0.57 X 1.6552 $188.69	
22	31 23 16 13-0013		CY	Compaction of Fill or Subbase for Trenches by Vibratory Plate, Air Tamper, Etcetera	$979.88
				Qty Unit Price Factor Total	
				Installation 200.000 X $2.96 X 1.6552 $979.88	
23	31 23 16 13-0013	0069	MOD	For >50 To 250, Add	$244.97
				Qty Unit Price Factor Total	
				Installation 200.000 X $0.74 X 1.6552 $244.97	
24	31 23 16 33-0003		CY	Bulk Excavation by Hydraulic Excavator, Front End Loader, Backhoe in Soil	$40,638.47
				Qty Unit Price Factor Total	
				Installation 6,200.000 X $3.96 X 1.6552 $40,638.47	



	CSI Number	Mod	UOM	Description					LineTotal
31 - Earthwork									
25	31 23 16 33-0003	0002	MOD	For Excavation In Heavy/Wet Material (Class C), Add					$16,214.34
					Qty		Unit Price	Factor	Total
				Installation	6,200.000	X	$1.58	X 1.6552	$16,214.34
26	31 23 16 33-0020		CY	Loading Excess Material For Removal From Bulk Excavation					$40,307.02
					Qty		Unit Price	Factor	Total
				Installation	5,925.000	X	$4.11	X 1.6552	$40,307.02
27	31 23 16 33-0020	0004	MOD	For >1,000, Deduct					($6,080.38)
					Qty		Unit Price	Factor	Total
				Installation	5,925.000	X	($0.62)	X 1.6552	($6,080.38)
28	31 23 16 36-0026		SY	Finish Grading For Building Foundations And Other Structures by Hand					$72,472.60
					Qty		Unit Price	Factor	Total
				Installation	9,560.000	X	$4.58	X 1.6552	$72,472.60
29	31 37 13 00-0008		CY	3/8 To 1/4 CY Pieces Random, Dumped From Truck, Machine Spread And Placed Slope Protection (Keyed) Rip Rap					$61,653.72
					Qty		Unit Price	Factor	Total
				Installation	410.000	X	$90.85	X 1.6552	$61,653.72
								Subtotal for 31 - Earthwork:	**$288,880.66**
								Grand Total:	**$585,359.14**

This work order proposal total represents the correct total for the proposal. Any discrepancy between line totals, sub-totals and the proposal total is due to rounding of the line totals and sub-totals.

The Percent of NPP on this Proposal: 20.29

EXHIBIT C

Detailed Scope of Work

Date:	11/5/2024
Work Order #:	135897.00
Title:	Marty Sanchez Phase 3 - #4 #10 and #16 Ponds
Contractor:	Mountain West Golfscapes Inc
Contractor Number:	PRO-JOCA-4666-21
Job Order Value:	$766,765.52

Location: City of Santa Fe

Detailed Scope:

Ponds on #10, #4 and #16
Pond on #10-Grub, Remove sludge, shape liner subgrade, install liner and venting, install rip rap shelf, clean up and demobilize.
Ponds on #4 and #16-grub, remove sludge, no liner or rep rap. Clean up and demobilize.

[redacted]

Contractor Price Proposal Details - CSI

Date: 11/5/2024

Work Order #: 135897.00

Title: Marty Sanchez Phase 3 - #4 #10 and #16 Ponds

Contractor: Mountain West Golfscapes Inc

Contractor Number: PRO-JOCA-4666-21

Job Order Value: $766,765.52

Proposal Name: Marty Sanchez Phase 3 - #4 #10 and #16 Ponds

Proposal Value: $766,765.52

	CSI Number	Mod	UOM	Description	LineTotal
1	0100000000001		CY	Waste Hauler	$124,992.00
			NPP Tasks	Qty / Unit Price / Factor / Total	
				Installation: 18,600.000 X $4.20 X 1.6000 = $124,992.00	
				Contractor Notes: *Haul of sludge by Special Waste Hauler*	
2	3200000000002		E/A	60-mil HDPE Liner - #10	$35,720.00
			NPP Tasks	Qty / Unit Price / Factor / Total	
				Installation: 1.000 X $22,325.00 X 1.6000 = $35,720.00	
				Subtotal for :	**$160,712.00**
01 - General Requirements					
3	01 22 16 00-0002		EA	Reimbursable FeesReimbursable Fees will be paid to the contractor for eligible costs as directed by Owner. Insert the appropriate quantity to adjust the base cost to the actual Reimbursable Fee. If there are multiple Reimbursable Fees, list each one separately and add a comment in the "note" block to identify the Reimbursable Fee (e.g. sidewalk closure, road cut, various permits, extended warranty, expedited shipping costs, etc.). A copy of each receipt, invoice, or proof of payment shall be submitted with the Price Proposal.	$200,000.00
				Qty / Unit Price / Factor / Total	
				Installation: 200,000.000 X $1.00 X 1.0000 = $200,000.00	
				Contractor Notes: *Allowance for repair of damaged concrete and repair of irrigation and turf related to trucking routes*	
4	01 22 16 00-0004		EA	New Mexico Gross Receipts Tax – Varies by County	$49,324.10
				Qty / Unit Price / Factor / Total	
				Installation: 49,324.100 X $1.00 X 1.0000 = $49,324.10	
				Contractor Notes: *Tax Rate @ 6.875%*	

[redacted]

	CSI Number	Mod	UOM	Description	LineTotal
01 - General Requirements					
5	01 22 20 00-0015		HR	LaborerFor tasks not included in the Construction Task Catalog® and as directed by owner only.	$62,725.96
				Qty Unit Price Factor Total	
				Installation 1,170.000 X $32.39 X 1.6552 $62,725.96	
				Contractor Notes: *Labor to install HDPE liner and Venting*	
6	01 71 13 00-0003		EA	Equipment Delivery, Pickup, Mobilization And Demobilization Using A Tractor Trailer With Up To 53' BedIncludes loading, tie-down of equipment, delivery of equipment, off loading on site, rigging, dismantling, loading for return and transporting away. For equipment such as bulldozers, motor scrapers, hydraulic excavators, gradalls, road graders, loader-backhoes, heavy duty construction loaders, tractors, pavers, rollers, bridge finishers, straight mast construction forklifts, telescoping boom rough terrain construction forklifts, telescoping and articulating boom man lifts with >40' boom lengths, etc.	$11,856.26
				Qty Unit Price Factor Total	
				Installation 6.000 X $1,193.84 X 1.6552 $11,856.26	
7	01 74 19 00-0039		CYM	Hauling On Paved Roads, Miles Over Initial 15 Miles	$4,555.11
				Qty Unit Price Factor Total	
				Installation 6,400.000 X $0.43 X 1.6552 $4,555.11	
				Contractor Notes: *Haul of Rip Rap*	
				Subtotal for 01 - General Requirements:	**$328,461.43**
31 - Earthwork					
8	31 05 16 00-0021		CY	3" To 7" Surge Stone Graded Aggregate Fill	$8,262.76
				Qty Unit Price Factor Total	
				Installation 100.000 X $49.92 X 1.6552 $8,262.76	
9	31 05 16 00-0021	0054	MOD	For >96, Deduct	($1,332.44)
				Qty Unit Price Factor Total	
				Installation 100.000 X ($8.05) X 1.6552 ($1,332.44)	
10	31 11 00 00-0008		ACR	Clearing By Machine - Light Brush Without Grub	$556.71
				Qty Unit Price Factor Total	
				Installation 2.000 X $168.17 X 1.6552 $556.71	
11	31 11 00 00-0015		CY	Machine Loading Of Cleared And Grubbed Material	$5,536.64
				Qty Unit Price Factor Total	
				Installation 500.000 X $6.69 X 1.6552 $5,536.64	
12	31 23 16 13-0003		CY	Over 12" Wide, Excavation for Trenching by Machine in Soil	$1,140.10
				Qty Unit Price Factor Total	
				Installation 140.000 X $4.92 X 1.6552 $1,140.10	
13	31 23 16 13-0003	0059	MOD	For >50 To 250, Add	$285.03
				Qty Unit Price Factor Total	
				Installation 140.000 X $1.23 X 1.6552 $285.03	

[redacted]

	CSI Number	Mod	UOM	Description					LineTotal
31 - Earthwork									
14	31 23 16 13-0010		CY	Backfilling or Placing Subbase for Trenches with Imported or Stockpiled Materials by Machine					$523.71
					Qty		Unit Price	Factor	Total
				Installation	140.000	X	$2.26	X 1.6552	$523.71
15	31 23 16 13-0010	0064	MOD	For >50 To 250, Add					$132.09
					Qty		Unit Price	Factor	Total
				Installation	140.000	X	$0.57	X 1.6552	$132.08
16	31 23 16 13-0013		CY	Compaction of Fill or Subbase for Trenches by Vibratory Plate, Air Tamper, Etcetera					$685.91
					Qty		Unit Price	Factor	Total
				Installation	140.000	X	$2.96	X 1.6552	$685.91
17	31 23 16 13-0013	0069	MOD	For >50 To 250, Add					$171.48
					Qty		Unit Price	Factor	Total
				Installation	140.000	X	$0.74	X 1.6552	$171.48
18	31 23 16 33-0003		CY	Bulk Excavation by Hydraulic Excavator, Front End Loader, Backhoe in Soil					$60,957.71
					Qty		Unit Price	Factor	Total
				Installation	9,300.000	X	$3.96	X 1.6552	$60,957.71
19	31 23 16 33-0003	0002	MOD	For Excavation In Heavy/Wet Material (Class C), Add					$24,321.51
					Qty		Unit Price	Factor	Total
				Installation	9,300.000	X	$1.58	X 1.6552	$24,321.51
20	31 23 16 33-0020		CY	Loading Excess Material For Removal From Bulk Excavation					$63,266.71
					Qty		Unit Price	Factor	Total
				Installation	9,300.000	X	$4.11	X 1.6552	$63,266.71
21	31 23 16 33-0020	0004	MOD	For >1,000, Deduct					($9,543.88)
					Qty		Unit Price	Factor	Total
				Installation	9,300.000	X	($0.62)	X 1.6552	($9,543.88)
22	31 23 16 36-0026		SY	Finish Grading For Building Foundations And Other Structures by Hand					$86,042.26
					Qty		Unit Price	Factor	Total
				Installation	11,350.000	X	$4.58	X 1.6552	$86,042.26
23	31 37 13 00-0008		CY	3/8 To 1/4 CY Pieces Random, Dumped From Truck, Machine Spread And Placed Slope Protection (Keyed) Rip Rap					$18,044.99
					Qty		Unit Price	Factor	Total
				Installation	120.000	X	$90.85	X 1.6552	$18,044.99
								Subtotal for 31 - Earthwork:	**$259,051.29**



	CSI Number	Mod	UOM	Description					LineTotal
32 - Exterior Improvements									
24	32 00 00 00-0003		E/A	#10- 10 Geotextile Venting					$18,540.80
			NPP Tasks		Qty	Unit Price	Factor	Total	
				Installation	1.000	X $11,588.00	X 1.6000	$18,540.80	
							Subtotal for 32 - Exterior Improvements:		**$18,540.80**
								Grand Total:	**$766,765.52**

This work order proposal total represents the correct total for the proposal. Any discrepancy between line totals, sub-totals and the proposal total is due to rounding of the line totals and sub-totals.

The Percent of NPP on this Proposal: 23.38

Detailed Scope of Work

Date:	11/5/2024
Work Order #:	135897.01
Title:	Marty Sanchez Phase 3 - Add Alt - 1 Fill in Ponds 4 & 16
Contractor:	Mountain West Golfscapes Inc
Contractor Number:	PRO-JOCA-4666-21
Job Order Value:	$433,634.85

Location: City of Santa Fe

Detailed Scope:

Hauling soil from a borrow site designated by the owner and on the property to fill in and compact the ponds on #4 and #16.
We will finish shape the filled in ponds to conform to the design intent of the golf course and match the features and topography.
Re-vegetative seeding by hydroseeding method of the filled ponds and the borrow site with seed mix approved by the owner.

Requirements:

Should you have any questions, please do not hesitate to contact me at 505-231-9219.

[redacted]

Contractor Price Proposal Details - CSI

Date: 11/5/2024

Work Order #: 135897.01

Title: Marty Sanchez Phase 3 - Add Alt - 1 Fill in Ponds 4 & 16

Contractor: Mountain West Golfscapes Inc

Contractor Number: PRO-JOCA-4666-21

Job Order Value: $433,634.85

Proposal Name: Marty Sanchez Phase 3 - Add Alt - 1 Fill in Ponds 4 & 16

Proposal Value: $433,634.85

	CSI Number	Mod	UOM	Description	LineTotal
01 - General Requirements					
1	01 22 16 00-0004		EA	New Mexico Gross Receipts Tax – Varies by County	$27,894.64
				Qty / Unit Price / Factor / Total	
				Installation: 27,894.640 X $1.00 X 1.0000 = $27,894.64	
				Contractor Notes: *Tax Rate @ 6.875%*	
2	01 71 13 00-0003		EA	Equipment Delivery, Pickup, Mobilization And Demobilization Using A Tractor Trailer With Up To 53' BedIncludes loading, tie-down of equipment, delivery of equipment, off loading on site, rigging, dismantling, loading for return and transporting away. For equipment such as bulldozers, motor scrapers, hydraulic excavators, gradalls, road graders, loader-backhoes, heavy duty construction loaders, tractors, pavers, rollers, bridge finishers, straight mast construction forklifts, telescoping boom rough terrain construction forklifts, telescoping and articulating boom man lifts with >40' boom lengths, etc.	$5,928.13
				Qty / Unit Price / Factor / Total	
				Installation: 3.000 X $1,193.84 X 1.6552 = $5,928.13	
				Subtotal for 01 - General Requirements:	**$33,822.77**
31 - Earthwork					
3	31 23 16 33-0003		CY	Bulk Excavation by Hydraulic Excavator, Front End Loader, Backhoe in Soil	$108,150.77
				Qty / Unit Price / Factor / Total	
				Installation: 16,500.000 X $3.96 X 1.6552 = $108,150.77	
4	31 23 16 33-0003	0003	MOD	For >1,000, Deduct	($16,113.37)
				Qty / Unit Price / Factor / Total	
				Installation: 16,500.000 X ($0.59) X 1.6552 = ($16,113.37)	

[redacted]

	CSI Number	Mod	UOM	Description					LineTotal
31 - Earthwork									
5	31 23 16 33-0014		CY	Relocating On Site Excavated Material From Bulk Excavation >1,000'					$263,822.33
					Qty		Unit Price	Factor	Total
				Installation	16,500.000	X	$9.66	X 1.6552	$263,822.33
6	31 23 16 33-0014	0003	MOD	For >1,000, Deduct					($39,600.66)
					Qty		Unit Price	Factor	Total
				Installation	16,500.000	X	($1.45)	X 1.6552	($39,600.66)
7	31 23 16 33-0016		SY	Finish Grading for Bulk Excavation by Machine					$5,025.19
					Qty		Unit Price	Factor	Total
				Installation	7,590.000	X	$0.40	X 1.6552	$5,025.19
8	31 23 16 33-0018		SY	Compaction of Fill or Subbase for Bulk Excavation by MachinePer Lift					$4,899.56
					Qty		Unit Price	Factor	Total
				Installation	7,590.000	X	$0.39	X 1.6552	$4,899.56
9	31 23 16 36-0031		CY	Spread Excess Or Imported Material On Site By Machine					$51,344.30
					Qty		Unit Price	Factor	Total
				Installation	16,500.000	X	$1.88	X 1.6552	$51,344.30
10	31 24 13 00-0018		SY	Finish Grade Roadway, Parking Areas, Landscaping And Embankments By Machine					$7,286.52
					Qty		Unit Price	Factor	Total
				Installation	7,590.000	X	$0.58	X 1.6552	$7,286.52
								Subtotal for 31 - Earthwork:	**$384,814.64**
32 - Exterior Improvements									
11	32 92 19 13-0009		MSF	Native Prarie, Hydro Or Air Seeding0.551 LB/MSF spread rate. Seed shall be Ohio Prairie Nursery No. MSG01, Mesic Short Grass Seed Mix: 25% Nodding Wild Rye, 25% Little Bluestem, 25% Side-oats Grama, 25% Prairie.					$16,210.37
					Qty		Unit Price	Factor	Total
				Installation	160.000	X	$61.21	X 1.6552	$16,210.37
12	32 92 19 13-0009	0269	MOD	For >45, Deduct					($1,212.93)
					Qty		Unit Price	Factor	Total
				Installation	160.000	X	($4.58)	X 1.6552	($1,212.93)
								Subtotal for 32 - Exterior Improvements:	**$14,997.44**
								Grand Total:	**$433,634.85**

This work order proposal total represents the correct total for the proposal. Any discrepancy between line totals, sub-totals and the proposal total is due to rounding of the line totals and sub-totals.

The Percent of NPP on this Proposal: 0.00

RFP-2379-23 ~ UNM Job Order Contracting ~

AGREEMENT

UNM JOC Contract Number: PRO-JOCA-4666-21

EFFECTIVE DATE: 2/15/2023 - 2/15/2026 RFP Number: 2379-23

Pursuant to UNM RFP number 2379-23, and response to UNM RFP number 2379-23, THIS AGREEMENT, made and entered into this 6th day of February 2023, in the State of New Mexico, by and between the Regents of the University of New Mexico, hereafter called UNM and Mountain West Golfscapes, inc. hereafter called Contractor, does hereby agree to furnish to the University Job Order Contracting Services as follows:

Services. To be in complete compliance with the Terms & Conditions, Specifications and response to UNM RFP-2379-23. The University of New Mexico wishes to engage Contractor to perform as needed UNM Job Order Contracting Services pursuant to Contractor response to RFP-2379-23 for Main, Northern, and Southern Branch campuses, the UNM Science and Technology Park, South Campus, UNM Comprehensive Cancer Center and UNM Health Sciences Center. UNM Cooperative Purchasing Job Order Contracting Services will only be provided in regions 1 through 5 under a multi-term contract pursuant to statutory limitations per NMSA-13-1-154.1. While the ability of Participating Public Agencies to utilize and piggyback this Master Agreement will survive, upon UNM reaching aggregate limits per NMSA 13-1-154.1, the ability to continue services for UNM will automatically expire if not terminated as provided herein. Participating Public Agencies shall have separate aggregate limits that will not be impacted by UNM reaching their aggregate limits. Contractor Services as applicable to the categories will be considered as the Job Order Contracting procurement method.

Termination for Convenience. UNM may terminate work for UNM under this Agreement, in whole or in part, without showing cause upon prior written notice to the Contractor specifying the extent and the effective date of the termination. The provisions of the UNM Purchasing Policies and Procedures hereunder, including the determination of rights and obligations of the parties, shall govern termination.

Inconsistencies. RFP number 2379-23 and the Contractor's response are incorporated into this Agreement by reference. In the event of any consistency or compatibility provisions, this agreement shall take precedence by UNM's RFP 2379-23 and addendums thereto, UNM terms and conditions and UNM Job Order Contracting Contractors response to RFP 2379-23.

Process for JOC:

Each job order, including supplemental job orders will follow the same five steps:

1. The UNM project manager will develop a brief scope of work for each job order, select a JOC contractor from the list of JOC awardees and schedule an initial site visit with the selected contractor.
2. The UNM project manager and the JOC contractor will conduct a Joint Scope meeting on site for each project and jointly review the brief scope of work.
3. After the joint scope meeting the JOC Contractor will utilize eGordian and the Construction Task Catalog to price each project. All JOC proposals will include a detailed listing of each line item, the unit price for each item, the install quantity, the demo quantity and the appropriate adjustment factor for each line item.
4. Upon completion of the proposal the JOC contractor will export the proposal to the UNM project manager for review via eGordian.
5. The UNM project manager will review each proposal for scope of work accuracy and contract compliance. If the proposal is found to be accurate and within the owners budget the owner will issue a purchase order to the JOC contractor.

No Call - No Show. UNM will request JOC proposals which may or may not result in work. Failure to respond to three (3) consecutive requests for proposals will be deemed non-responsive and may result in Contractor's removal from the UNM JOC list. Contractors providing a reasonable response to a solicitation with regards to Contractor's inability to provide a proposal at this time may not be considered "non-responsive."

IN WITNESS WHEREOF, this agreement has been executed by the parties hereto, upon the date first above written.

BY SIGNING BELOW, THE VENDOR CERTIFIES THAT HE/SHE IS AUTHORIZED TO OBLIGATE HER/HIS FIRM TO THE TERMS AND CONDITIONS OF THIS CONTRACT.

The REGENTS OF THE UNIVERSITY OF NEW MEXICO:	Contractor:
By: Bruce Cherrin (Feb 6, 2023 14:27 MST)	By: JOHN MONDRAGON (Feb 6, 2023 14:16 MST)
Print Name: Bruce Cherrin	Print Name: JOHN MONDRAGON
Title: Chief Procurement Officer	Title: President
Date: Feb 6, 2023	Date: Feb 6, 2023

Exhibit A

Diversity Vendor

Certification

Participation

DIVERSITY VENDOR CERTIFICATION PARTICIPATION

Diversity Vendor Certification Participation - It is the policy of some Members participating in Omnia Partners to involve minority and women business enterprises (M/WBE), small and/or disadvantaged business enterprises, disable veterans business enterprises, historically utilized businesses (HUB) and other diversity recognized businesses in the purchase of goods and services. Respondents shall indicate below whether or not they hold certification in any of the classified areas and include proof of such certification with their response.

1. Minority Women Business Enterprise
   Respondent certifies that this firm is an MWBE ☐Yes ☐No
   List certifying agency: _____

2. Small Business Enterprise (SBE) or Disadvantaged Business Enterprise (DBE)
   Respondent certifies that this firm is a SBE or DBE ☐Yes ☐No
   List certifying agency: _____

3. Disabled Veterans Business Enterprise (DVBE)
   Respondent certifies that this firm is an DVBE ☐Yes ☐No
   List certifying agency: _____

4. Historically Underutilized Businesses (HUB)
   Respondent certifies that this firm is an HUB ☐Yes ☐No
   List certifying agency: _____

5. Historically Underutilized Business Zone Enterprise (HUBZone)
   Respondent certifies that this firm is an HUBZone ☐Yes ☐No
   List certifying agency: _____

6. Other
   Respondent certifies that this firm is a recognized diversity certificate holder ☐Yes ☐No
   List certifying agency: _____

Exhibit B

Federal Funds

Certifications

Attachment E
Federal Funds Certifications

FEDERAL CERTIFICATIONS
ADDENDUM FOR AGREEMENT FUNDED BY U.S. FEDERAL GRANT

TO WHOM IT MAY CONCERN:

Participating Agencies may elect to use federal funds to purchase under the Master Agreement. This form should be completed and returned.

DEFINITIONS

Contract means a legal instrument by which a non–Federal entity purchases property or services needed to carry out the project or program under a Federal award. The term as used in this part does not include a legal instrument, even if the non–Federal entity considers it a contract, when the substance of the transaction meets the definition of a Federal award or subaward

Contractor means an entity that receives a contract as defined in Contract.

Cooperative agreement means a legal instrument of financial assistance between a Federal awarding agency or pass-through entity and a non–Federal entity that, consistent with 31 U.S.C. 6302–6305:

(a) Is used to enter into a relationship the principal purpose of which is to transfer anything of value from the Federal awarding agency or pass-through entity to the non–Federal entity to carry out a public purpose authorized by a law of the United States (see 31 U.S.C. 6101(3)); and not to acquire property or services for the Federal government or pass-through entity's direct benefit or use;

(b) Is distinguished from a grant in that it provides for substantial involvement between the Federal awarding agency or pass-through entity and the non–Federal entity in carrying out the activity contemplated by the Federal award.

(c) The term does not include:

(1) A cooperative research and development agreement as defined in 15 U.S.C. 3710a; or

(2) An agreement that provides only:

(i) Direct United States Government cash assistance to an individual;

(ii) A subsidy;

(iii) A loan;

(iv) A loan guarantee; or

(v) Insurance.

Federal awarding agency means the Federal agency that provides a Federal award directly to a non–Federal entity

Federal award has the meaning, depending on the context, in either paragraph (a) or (b) of this section:

(a)(1) The Federal financial assistance that a non–Federal entity receives directly from a Federal awarding agency or indirectly from a pass-through entity, as described in § 200.101 Applicability; or

(2) The cost-reimbursement contract under the Federal Acquisition Regulations that a non–Federal entity receives directly from a Federal awarding agency or indirectly from a pass-through entity, as described in § 200.101 Applicability.

(b) The instrument setting forth the terms and conditions. The instrument is the grant agreement, cooperative agreement, other agreement for assistance covered in paragraph (b) of § 200.40 Federal financial assistance, or the cost-reimbursement contract awarded under the Federal Acquisition Regulations.

(c) Federal award does not include other contracts that a Federal agency uses to buy goods or services from a contractor or a contract to operate Federal government owned, contractor operated facilities (GOCOs).

(d) See also definitions of Federal financial assistance, grant agreement, and cooperative agreement.

Non–Federal entity means a state, local government, Indian tribe, institution of higher education (IHE), or nonprofit organization that carries out a Federal award as a recipient or subrecipient.

Nonprofit organization means any corporation, trust, association, cooperative, or other organization, not including IHEs, that:

(a) Is operated primarily for scientific, educational, service, charitable, or similar purposes in the public interest;

(b) Is not organized primarily for profit; and

(c) Uses net proceeds to maintain, improve, or expand the operations of the organization.

Obligations means, when used in connection with a non–Federal entity's utilization of funds under a Federal award, orders placed for property and services, contracts and subawards made, and similar transactions during a given period that require payment by the non–Federal entity during the same or a future period.

Pass-through entity means a non–Federal entity that provides a subaward to a subrecipient to carry out part of a Federal program.

Recipient means a non–Federal entity that receives a Federal award directly from a Federal awarding agency to carry out an activity under a Federal program. The term recipient does not include subrecipients.

Simplified acquisition threshold means the dollar amount below which a non–Federal entity may purchase property or services using small purchase methods. Non–Federal entities adopt small purchase procedures in order to expedite the purchase of items costing less than the simplified acquisition threshold. The simplified acquisition threshold is set by the Federal Acquisition Regulation at 48 CFR Subpart 2.1 (Definitions) and in accordance with 41 U.S.C. 1908. As of the publication of this part, the simplified acquisition threshold is $250,000, but this threshold is periodically adjusted for inflation. (Also see definition of § 200.67 Micro-purchase.)

Subaward means an award provided by a pass-through entity to a subrecipient for the subrecipient to carry out part of a Federal award received by the pass-through entity. It does not include payments to a contractor or payments to an individual that is a beneficiary of a Federal program. A subaward may be provided through any form of legal agreement, including an agreement that the pass-through entity considers a contract.

Subrecipient means a non–Federal entity that receives a subaward from a pass-through entity to carry out part of a Federal program; but does not include an individual that is a beneficiary of such program. A subrecipient may also be a recipient of other Federal awards directly from a Federal awarding agency.

Termination means the ending of a Federal award, in whole or in part at any time prior to the planned end of period of performance.

The following provisions may be required and apply when Participating Agency expends federal funds for any purchase resulting from this procurement process. Per FAR 52.204-24 and FAR 52.204-25, solicitations and resultant contracts shall contain the following provisions.

52.204-24 Representation Regarding Certain Telecommunications and Video Surveillance Services or Equipment (Oct 2020)

The Offeror shall not complete the representation at paragraph (d)(1) of this provision if the Offeror has represented that it "does not provide covered telecommunications equipment or services as a part of its offered products or services to the Government in the performance of any contract, subcontract, or other contractual instrument" in paragraph (c)(1) in the provision at 52.204-26, Covered Telecommunications Equipment or Services—Representation, or in paragraph (v)(2)(i) of the provision at 52.212-3, Offeror Representations and Certifications-Commercial Items. The Offeror shall not complete the representation in paragraph (d)(2) of this provision if the Offeror has represented that it "does not use covered telecommunications equipment or services, or any equipment, system, or service that uses covered telecommunications equipment or services" in paragraph (c)(2) of the provision at 52.204-26, or in paragraph (v)(2)(ii) of the provision at 52.212-3.

(a) *Definitions.* As used in this provision—

Backhaul, covered telecommunications equipment or services, critical technology, interconnection arrangements, reasonable inquiry, roaming, and substantial or essential component have the meanings provided in the clause 52.204-25, Prohibition on Contracting for Certain Telecommunications and Video Surveillance Services or Equipment.

(b) *Prohibition.*

(1) Section 889(a)(1)(A) of the John S. McCain National Defense Authorization Act for Fiscal Year 2019 (Pub. L. 115-232) prohibits the head of an executive agency on or after August 13, 2019, from procuring or obtaining, or extending or renewing a contract to procure or obtain, any equipment, system, or service that uses covered telecommunications equipment or services as a substantial or essential component of any system, or as critical technology as part of any system. Nothing in the prohibition shall be construed to—

(i) Prohibit the head of an executive agency from procuring with an entity to provide a service that connects to the facilities of a third-party, such as backhaul, roaming, or interconnection arrangements; or

(ii) Cover telecommunications equipment that cannot route or redirect user data traffic or cannot permit visibility into any user data or packets that such equipment transmits or otherwise handles.

(2) Section 889(a)(1)(B) of the John S. McCain National Defense Authorization Act for Fiscal Year 2019 (Pub. L. 115-232) prohibits the head of an executive agency on or after August 13, 2020, from entering into a contract or extending or renewing a contract with an entity that uses any equipment, system, or service that uses covered telecommunications equipment or services as a substantial or essential component of any system, or as critical technology as part of any system. This prohibition applies to the use of covered telecommunications equipment or services, regardless of whether that use is in performance of work under a Federal contract. Nothing in the prohibition shall be construed to—

(i) Prohibit the head of an executive agency from procuring with an entity to provide a service that connects to the facilities of a third-party, such as backhaul, roaming, or interconnection arrangements; or

(ii) Cover telecommunications equipment that cannot route or redirect user data traffic or cannot permit visibility into any user data or packets that such equipment transmits or otherwise handles.

(c) *Procedures.* The Offeror shall review the list of excluded parties in the System for Award Management (SAM) (https://www.sam.gov) for entities excluded from receiving federal awards for "covered telecommunications equipment or services".

(d) *Representation.* The Offeror represents that—

(1) It □ will, □ will not provide covered telecommunications equipment or services to the Government in the performance of any contract, subcontract or other contractual instrument resulting from this solicitation. The Offeror shall provide the additional disclosure information required at paragraph (e)(1) of this section if the Offeror responds "will" in paragraph (d)(1) of this section; and

(2) After conducting a reasonable inquiry, for purposes of this representation, the Offeror represents that—

It □ does, □ does not use covered telecommunications equipment or services, or use any equipment, system, or service that uses covered telecommunications equipment or services. The Offeror shall provide the additional disclosure information required at paragraph (e)(2) of this section if the Offeror responds "does" in paragraph (d)(2) of this section.

(e) *Disclosures.*

(1) Disclosure for the representation in paragraph (d)(1) of this provision. If the Offeror has responded "will" in the representation in paragraph (d)(1) of this provision, the Offeror shall provide the following information as part of the offer.

(i) For covered equipment—

(A) The entity that produced the covered telecommunications equipment (include entity name, unique entity identifier, CAGE code, and whether the entity was the original equipment manufacturer (OEM) or a distributor, if known);

(B) A description of all covered telecommunications equipment offered (include brand; model number, such as OEM number, manufacturer part number, or wholesaler number; and item description, as applicable); and

(C) Explanation of the proposed use of covered telecommunications equipment and any factors relevant to determining if such use would be permissible under the prohibition in paragraph (b)(1) of this provision.

(ii) For covered services—

(A) If the service is related to item maintenance: A description of all covered telecommunications services offered (include on the item being maintained: Brand; model number, such as OEM number, manufacturer part number, or wholesaler number; and item description, as applicable); or

(B) If not associated with maintenance, the Product Service Code (PSC) of the service being provided; and explanation of the proposed use of covered telecommunications services and any factors relevant to determining if such use would be permissible under the prohibition in paragraph (b)(1) of this provision.

(2) Disclosure for the representation in paragraph (d)(2) of this provision. If the Offeror has responded "does" in the representation in paragraph (d)(2) of this provision, the Offeror shall provide the following information as part of the offer:

(i) For covered equipment—

(A) The entity that produced the covered telecommunications equipment (include entity name, unique entity identifier, CAGE code, and whether the entity was the OEM or a distributor, if known);

(B) A description of all covered telecommunications equipment offered (include brand; model number, such as OEM number, manufacturer part number, or wholesaler number; and item description, as applicable); and

(C) Explanation of the proposed use of covered telecommunications equipment and any factors relevant to determining if such use would be permissible under the prohibition in paragraph (b)(2) of this provision.

(ii) For covered services—

(A) If the service is related to item maintenance: A description of all covered telecommunications services offered (include on the item being maintained: Brand; model number, such as OEM number, manufacturer part number, or wholesaler number; and item description, as applicable); or

(B) If not associated with maintenance, the PSC of the service being provided; and explanation of the proposed use of covered telecommunications services and any factors relevant to determining if such use would be permissible under the prohibition in paragraph (b)(2) of this provision.

Does offeror agree? YES _____Initials of Authorized Representative of offeror

52.204-25 Prohibition on Contracting for Certain Telecommunications and Video Surveillance Services or Equipment (Aug 2020).

(a) *Definitions.* As used in this clause—

Backhaul means intermediate links between the core network, or backbone network, and the small subnetworks at the edge of the network (*e.g.*, connecting cell phones/towers to the core telephone network). Backhaul can be wireless (e.g., microwave) or wired (*e.g.*, fiber optic, coaxial cable, Ethernet).

Covered foreign country means The People's Republic of China.

Covered telecommunications equipment or services means–

(1) Telecommunications equipment produced by Huawei Technologies Company or ZTE Corporation (or any subsidiary or affiliate of such entities);

(2) For the purpose of public safety, security of Government facilities, physical security surveillance of critical infrastructure, and other national security purposes, video surveillance and telecommunications equipment produced by Hytera Communications Corporation, Hangzhou Hikvision Digital Technology Company, or Dahua Technology Company (or any subsidiary or affiliate of such entities);

(3) Telecommunications or video surveillance services provided by such entities or using such equipment; or

(4) Telecommunications or video surveillance equipment or services produced or provided by an entity that the Secretary of Defense, in consultation with the Director of National Intelligence or the Director of the Federal Bureau of Investigation, reasonably believes to be an entity owned or controlled by, or otherwise connected to, the government of a covered foreign country.

Critical technology means–

(1) Defense articles or defense services included on the United States Munitions List set forth in the International Traffic in Arms Regulations under subchapter M of chapter I of title 22, Code of Federal Regulations;

(2) Items included on the Commerce Control List set forth in Supplement No. 1 to part 774 of the Export Administration Regulations under subchapter C of chapter VII of title 15, Code of Federal Regulations, and controlled-

(i) Pursuant to multilateral regimes, including for reasons relating to national security, chemical and biological weapons proliferation, nuclear nonproliferation, or missile technology; or

(ii) For reasons relating to regional stability or surreptitious listening;

(3) Specially designed and prepared nuclear equipment, parts and components, materials, software, and technology covered by part 810 of title 10, Code of Federal Regulations (relating to assistance to foreign atomic energy activities);

(4) Nuclear facilities, equipment, and material covered by part 110 of title 10, Code of Federal Regulations (relating to export and import of nuclear equipment and material);

(5) Select agents and toxins covered by part 331 of title 7, Code of Federal Regulations, part 121 of title 9 of such Code, or part 73 of title 42 of such Code; or

(6) Emerging and foundational technologies controlled pursuant to section 1758 of the Export Control Reform Act of 2018 (50 U.S.C. 4817).

Interconnection arrangements means arrangements governing the physical connection of two or more networks to allow the use of another's network to hand off traffic where it is ultimately delivered (*e.g.*, connection of a customer of telephone provider A to a customer of telephone company B) or sharing data and other information resources.

Reasonable inquiry means an inquiry designed to uncover any information in the entity's possession about the identity of the producer or provider of covered telecommunications equipment or services used by the entity that excludes the need to include an internal or third-party audit.

Roaming means cellular communications services (*e.g.*, voice, video, data) received from a visited network when unable to connect to the facilities of the home network either because signal coverage is too weak or because traffic is too high.

Substantial or essential component means any component necessary for the proper function or performance of a piece of equipment, system, or service.

(b) *Prohibition.*

(1) Section 889(a)(1)(A) of the John S. McCain National Defense Authorization Act for Fiscal Year 2019 (Pub. L. 115-232) prohibits the head of an executive agency on or after August 13, 2019, from procuring or obtaining, or extending or renewing a contract to procure or obtain, any equipment, system, or service that uses covered telecommunications equipment or services as a substantial or essential component of any system, or as critical technology as part of any system. The Contractor is prohibited from providing to the Government any equipment, system, or service that uses covered telecommunications equipment or services as a substantial or essential component of any system, or as critical technology as part of any system, unless an exception at paragraph (c) of this clause applies or the covered telecommunication equipment or services are covered by a waiver described in FAR 4.2104.

(2) Section 889(a)(1)(B) of the John S. McCain National Defense Authorization Act for Fiscal Year 2019 (Pub. L. 115-232) prohibits the head of an executive agency on or after August 13, 2020, from entering into a contract, or extending or renewing a contract, with an entity that uses any equipment, system, or service that uses covered telecommunications equipment or services as a substantial or essential component of any system, or as critical technology as part of any system, unless an exception at paragraph (c) of this clause applies or the covered telecommunication equipment or services are covered by a waiver described in FAR 4.2104. This prohibition applies to the use of covered telecommunications equipment or services, regardless of whether that use is in performance of work under a Federal contract.

(c) *Exceptions.* This clause does not prohibit contractors from providing—

(1) A service that connects to the facilities of a third-party, such as backhaul, roaming, or interconnection arrangements; or

(2) Telecommunications equipment that cannot route or redirect user data traffic or permit visibility into any user data or packets that such equipment transmits or otherwise handles.

(d) Reporting requirement.

(1) In the event the Contractor identifies covered telecommunications equipment or services used as a substantial or essential component of any system, or as critical technology as part of any system, during contract performance, or the Contractor is notified of such by a subcontractor at any tier or by any other source, the Contractor shall report the information in paragraph (d)(2) of this clause to the Contracting Officer, unless elsewhere in this contract are established procedures for reporting the information; in the case of the Department of Defense, the Contractor shall report to the website at https://dibnet.dod.mil. For indefinite delivery contracts, the Contractor shall report to the Contracting Officer for the indefinite delivery contract and the Contracting Officer(s) for any affected order or, in the case of the Department of Defense, identify both the indefinite delivery contract and any affected orders in the report provided at https://dibnet.dod.mil.

(2) The Contractor shall report the following information pursuant to paragraph (d)(1) of this clause

(i) Within one business day from the date of such identification or notification: the contract number; the order number(s), if applicable; supplier name; supplier unique entity identifier (if known); supplier Commercial and Government Entity (CAGE) code (if known); brand; model number (original equipment manufacturer number, manufacturer part number, or wholesaler number); item description; and any readily available information about mitigation actions undertaken or recommended.

(ii) Within 10 business days of submitting the information in paragraph (d)(2)(i) of this clause: any further available information about mitigation actions undertaken or recommended. In addition, the Contractor shall describe the efforts it undertook to prevent use or submission of covered telecommunications equipment or services, and any additional efforts that will be incorporated to prevent future use or submission of covered telecommunications equipment or services.

(e) *Subcontracts.* The Contractor shall insert the substance of this clause, including this paragraph (e) and excluding paragraph (b)(2), in all subcontracts and other contractual instruments, including subcontracts for the acquisition of commercial items.

Does offeror agree? YES _____Initials of Authorized Representative of offeror

The following certifications and provisions may be required and apply when Participating Agency expends federal funds for any purchase resulting from this procurement process. Pursuant to 2 C.F.R. § 200.326, all contracts, including small purchases,

awarded by the Participating Agency and the Participating Agency's subcontractors shall contain the procurement provisions of Appendix II to Part 200, as applicable.

APPENDIX II TO 2 CFR PART 200

(A) Contracts for more than the simplified acquisition threshold currently set at $250,000, which is the inflation adjusted amount determined by the Civilian Agency Acquisition Council and the Defense Acquisition Regulations Council (Councils) as authorized by 41 U.S.C. 1908, must address administrative, contractual, or legal remedies in instances where contractors violate or breach contract terms, and provide for such sanctions and penalties as appropriate.

Pursuant to Federal Rule (A) above, when a Participating Agency expends federal funds, the Participating Agency reserves all rights and privileges under the applicable laws and regulations with respect to this procurement in the event of breach of contract by either party.

Does offeror agree? YES _____ Initials of Authorized Representative of offeror

(B) Termination for cause and for convenience by the grantee or subgrantee including the manner by which it will be effected and the basis for settlement. (All contracts in excess of $10,000)

Pursuant to Federal Rule (B) above, when a Participating Agency expends federal funds, the Participating Agency reserves the right to immediately terminate any agreement in excess of $10,000 resulting from this procurement process in the event of a breach or default of the agreement by Offeror as detailed in the terms of the contract.

Does offeror agree? YES _____ Initials of Authorized Representative of offeror

(C) Equal Employment Opportunity. Except as otherwise provided under 41 CFR Part 60, all contracts that meet the definition of "federally assisted construction contract" in 41 CFR Part 60-1.3 must include the equal opportunity clause provided under 41 CFR 60-1.4(b), in accordance with Executive Order 11246, "Equal Employment Opportunity" (30 CFR 12319, 12935, 3 CFR Part, 1964-1965 Comp., p. 339), as amended by Executive Order 11375, "Amending Executive Order 11246 Relating to Equal Employment Opportunity," and implementing regulations at 41 CFR part 60, "Office of Federal Contract Compliance Programs, Equal Employment Opportunity, Department of Labor."

Pursuant to Federal Rule (C) above, when a Participating Agency expends federal funds on any federally assisted construction contract, the equal opportunity clause is incorporated by reference herein.

Does offeror agree to abide by the above? YES _____ Initials of Authorized Representative of offeror

(D) Davis-Bacon Act, as amended (40 U.S.C. 3141-3148). When required by Federal program legislation, all prime construction contracts in excess of $2,000 awarded by non-Federal entities must include a provision for compliance with the Davis-Bacon Act (40 U.S.C. 3141-3144, and 3146-3148) as supplemented by Department of Labor regulations (29 CFR Part 5, "Labor Standards Provisions Applicable to Contracts Covering Federally Financed and Assisted Construction"). In accordance with the statute, contractors must be required to pay wages to laborers and mechanics at a rate not less than the prevailing wages specified in a wage determination made by the Secretary of Labor. In addition, contractors must be required to pay wages not less than once a week. The non-Federal entity must place a copy of the current prevailing wage determination issued by the Department of Labor in each solicitation. The decision to award a contract or subcontract must be conditioned upon the acceptance of the wage determination. The non - Federal entity must report all suspected or reported violations to the Federal awarding agency. The contracts must also include a provision for compliance with the Copeland "Anti-Kickback" Act (40 U.S.C. 3145), as supplemented by Department of Labor regulations (29 CFR Part 3, "Contractors and Subcontractors on Public Building or Public Work Financed in Whole or in Part by Loans or Grants from the United States"). The Act provides that each contractor or subrecipient must be prohibited from inducing, by any means, any person employed in the construction, completion, or repair of public work, to give up any part of the compensation to which he or she is otherwise entitled. The non-Federal entity must report all suspected or reported violations to the Federal awarding agency.

Pursuant to Federal Rule (D) above, when a Participating Agency expends federal funds during the term of an award for all contracts and subgrants for construction or repair, offeror will be in compliance with all applicable Davis-Bacon Act provisions.

Does offeror agree? YES _____ Initials of Authorized Representative of offeror

(E) Contract Work Hours and Safety Standards Act (40 U.S.C. 3701-3708). Where applicable, all contracts awarded by the non-Federal entity in excess of $100,000 that involve the employment of mechanics or laborers must include a provision for compliance with 40 U.S.C. 3702 and 3704, as supplemented by Department of Labor regulations (29 CFR Part 5). Under 40 U.S.C. 3702 of the Act, each contractor must be required to compute the wages of every mechanic and laborer on the basis of a standard work week of 40 hours. Work in excess of the standard work week is permissible provided that the worker is compensated at a rate of not less than one and a half times the basic rate of pay for all hours worked in excess of 40 hours in the work week. The requirements of 40 U.S.C. 3704 are applicable to construction work and provide that no laborer or mechanic must be required to work in surroundings or under working conditions which are unsanitary, hazardous or dangerous. These requirements do not apply to the purchases of supplies or materials or articles ordinarily available on the open market, or contracts for transportation or transmission of intelligence.

Pursuant to Federal Rule (E) above, when a Participating Agency expends federal funds, offeror certifies that offeror will be in compliance with all applicable provisions of the Contract Work Hours and Safety Standards Act during the term of an award for all contracts by Participating Agency resulting from this procurement process.

Does offeror agree? YES _____Initials of Authorized Representative of offeror

(F) Rights to Inventions Made Under a Contract or Agreement. If the Federal award meets the definition of "funding agreement" under 37 CFR §401.2 (a) and the recipient or subrecipient wishes to enter into a contract with a small business firm or nonprofit organization regarding the substitution of parties, assignment or performance of experimental, developmental, or research work under that "funding agreement," the recipient or subrecipient must comply with the requirements of 37 CFR Part 401, "Rights to Inventions Made by Nonprofit Organizations and Small Business Firms Under Government Grants, Contracts and Cooperative Agreements," and any implementing regulations issued by the awarding agency.

Pursuant to Federal Rule (F) above, when federal funds are expended by Participating Agency, the offeror certifies that during the term of an award for all contracts by Participating Agency resulting from this procurement process, the offeror agrees to comply with all applicable requirements as referenced in Federal Rule (F) above.

Does offeror agree? YES _____Initials of Authorized Representative of offeror

(G) Clean Air Act (42 U.S.C. 7401-7671q.) and the Federal Water Pollution Control Act (33 U.S.C. 1251-1387), as amended—Contracts and subgrants of amounts in excess of $150,000 must contain a provision that requires the non-Federal award to agree to comply with all applicable standards, orders or regulations issued pursuant to the Clean Air Act (42 U.S.C. 7401-7671q) and the Federal Water Pollution Control Act as amended (33 U.S.C. 1251- 1387). Violations must be reported to the Federal awarding agency and the Regional Office of the Environmental Protection Agency (EPA)

Pursuant to Federal Rule (G) above, when federal funds are expended by Participating Agency, the offeror certifies that during the term of an award for all contracts by Participating Agency member resulting from this procurement process, the offeror agrees to comply with all applicable requirements as referenced in Federal Rule (G) above.

Does offeror agree? YES _____Initials of Authorized Representative of offeror

(H) Debarment and Suspension (Executive Orders 12549 and 12689)—A contract award (see 2 CFR 180.220) must not be made to parties listed on the government wide exclusions in the System for Award Management (SAM), in accordance with the Executive Office of the President Office of Management and Budget (OMB) guidelines at 2 CFR 180 that implement Executive Orders 12549 (3 CFR part 1986 Comp., p. 189) and 12689 (3 CFR part 1989 Comp., p. 235), "Debarment and Suspension." SAM Exclusions contains the names of parties debarred, suspended, or otherwise excluded by agencies, as well as parties declared ineligible under statutory or regulatory authority other than Executive Order 12549.

Pursuant to Federal Rule (H) above, when federal funds are expended by Participating Agency, the offeror certifies that during the term of an award for all contracts by Participating Agency resulting from this procurement process, the offeror certifies that neither it nor its principals is presently debarred, suspended, proposed for debarment, declared ineligible, or voluntarily excluded from participation by any federal department or agency. If at any time during the term of an award the offeror or its principals becomes debarred, suspended, proposed for debarment, declared ineligible, or voluntarily excluded from participation by any federal department or agency, the offeror will notify the Participating Agency.

Does offeror agree? YES _____ Initials of Authorized Representative of offeror

(l) Byrd Anti-Lobbying Amendment (31 U.S.C. 1352)—Contractors that apply or bid for an award exceeding $100,000 must file the required certification. Each tier certifies to the tier above that it will not and has not used Federal appropriated funds to pay any person or organization for influencing or attempting to influence an officer or employee of any agency, a member of Congress, officer or employee of Congress, or an employee of a member of Congress in connection with obtaining any Federal contract, grant or any other award covered by 31 U.S.C. 1352. Each tier must also disclose any lobbying with non-Federal funds that takes place in connection with obtaining any Federal award. Such disclosures are forwarded from tier to tier up to the non-Federal award.

Pursuant to Federal Rule (l) above, when federal funds are expended by Participating Agency, the offeror certifies that during the term and after the awarded term of an award for all contracts by Participating Agency resulting from this procurement process, the offeror certifies that it is in compliance with all applicable provisions of the Byrd Anti-Lobbying Amendment (31 U.S.C. 1352). The undersigned further certifies that:

(1) No Federal appropriated funds have been paid or will be paid for on behalf of the undersigned, to any person for influencing or attempting to influence an officer or employee of any agency, a Member of Congress, an officer or employee of congress, or an employee of a Member of Congress in connection with the awarding of a Federal contract, the making of a Federal grant, the making of a Federal loan, the entering into a cooperative agreement, and the extension, continuation, renewal, amendment, or modification of a Federal contract, grant, loan, or cooperative agreement.

(2) If any funds other than Federal appropriated funds have been paid or will be paid to any person for influencing or attempting to influence an officer or employee of any agency, a Member of Congress, an officer or employee of congress, or an employee of a Member of Congress in connection with this Federal grant or cooperative agreement, the undersigned shall complete and submit Standard Form-LLL, "Disclosure Form to Report Lobbying", in accordance with its instructions.

(3) The undersigned shall require that the language of this certification be included in the award documents for all covered sub-awards exceeding $100,000 in Federal funds at all appropriate tiers and that all subrecipients shall certify and disclose accordingly.

Does offeror agree? YES _____ Initials of Authorized Representative of offeror

RECORD RETENTION REQUIREMENTS FOR CONTRACTS INVOLVING FEDERAL FUNDS

When federal funds are expended by Participating Agency for any contract resulting from this procurement process, offeror certifies that it will comply with the record retention requirements detailed in 2 CFR § 200.333. The offeror further certifies that offeror will retain all records as required by 2 CFR § 200.333 for a period of three years after grantees or subgrantees submit final expenditure reports or quarterly or annual financial reports, as applicable, and all other pending matters are closed.

Does offeror agree? YES _____ Initials of Authorized Representative of offeror

CERTIFICATION OF COMPLIANCE WITH THE ENERGY POLICY AND CONSERVATION ACT

When Participating Agency expends federal funds for any contract resulting from this procurement process, offeror certifies that it will comply with the mandatory standards and policies relating to energy efficiency which are contained in the state energy conservation plan issued in compliance with the Energy Policy and Conservation Act (42 U.S.C. 6321 et seq.; 49 C.F.R. Part 18).

Does offeror agree? YES _____ Initials of Authorized Representative of offeror

CERTIFICATION OF COMPLIANCE WITH BUY AMERICA PROVISIONS

To the extent purchases are made with Federal Highway Administration, Federal Railroad Administration, or Federal Transit Administration funds, offeror certifies that its products comply with all applicable provisions of the Buy America Act and agrees to provide such certification or applicable waiver with respect to specific products to any Participating Agency upon request. Purchases made in accordance with the Buy America Act must still follow the applicable procurement rules calling for free and open competition.

Does offeror agree? YES _____ Initials of Authorized Representative of offeror

CERTIFICATION OF ACCESS TO RECORDS – 2 C.F.R. § 200.336

Offeror agrees that the Inspector General of the Agency or any of their duly authorized representatives shall have access to any documents, papers, or other records of offeror that are pertinent to offeror's discharge of its obligations under the Contract for the purpose of making audits, examinations, excerpts, and transcriptions. The right also includes timely and reasonable access to offeror's personnel for the purpose of interview and discussion relating to such documents.

Does offeror agree? YES _____Initials of Authorized Representative of offeror

CERTIFICATION OF APPLICABILITY TO SUBCONTRACTORS

Offeror agrees that all contracts it awards pursuant to the Contract shall be bound by the foregoing terms and conditions.

Does offeror agree? YES _____Initials of Authorized Representative of offeror

Offeror agrees to comply with all federal, state, and local laws, rules, regulations and ordinances, as applicable. It is further acknowledged that offeror certifies compliance with all provisions, laws, acts, regulations, etc. as specifically noted above.

Offeror's Name:

_____

Address, City, State, and Zip Code:

_____

Phone Number: _____ Fax Number:

_____

Printed Name and Title of Authorized Representative:

_____

Email Address:

_____

Signature of Authorized Representative: _____Date: _____

FEMA SPECIAL CONDITIONS

Awarded Supplier(s) may need to respond to events and losses where products and services are needed for the immediate and initial response to emergency situations such as, but not limited to, water damage, fire damage, vandalism cleanup, biohazard cleanup, sewage decontamination, deodorization, and/or wind damage during a disaster or emergency situation. By submitting a proposal, the Supplier is accepted these FEMA Special Conditions required by the Federal Emergency Management Agency (FEMA).

"Contract" in the below pages under FEMA SPECIAL CONDITIONS is also referred to and defined as the "Master Agreement".

"Contractor" in the below pages under FEMA SPECIAL CONDITIONS is also referred to and defined as "Supplier" or "Awarded Supplier".

Conflicts of Interest

No employee, officer, or agent may participate in the selection, award, or administration of a contract supported by a FEMA award if he or she has a real or apparent conflict of interest. Such a conflict would arise when the employee, officer, or agent, any member of his or her immediate family, his or her partner, or an organization which employs or is about to employ any of these parties, has a financial or other interest in or a tangible personal benefit from a firm considered for award. 2 C.F.R. § 200.318(c)(1); See also Standard Form 424D, ¶ 7; Standard Form 424B, ¶ 3. i. FEMA considers a "financial interest" to be the potential for gain or loss to the employee, officer, or agent, any member of his or her immediate family, his or her partner, or an organization which employs or is about to employ any of these parties as a result of the particular procurement. The prohibited financial interest may arise from ownership of certain financial instruments or investments such as stock, bonds, or real estate, or from a salary, indebtedness, job offer, or similar interest that might be affected by the particular procurement. ii. FEMA considers an "apparent" conflict of interest to exist where an actual conflict does not exist, but where a reasonable person with knowledge of the relevant facts would question the impartiality of the employee, officer, or agent participating in the procurement. c. Gifts. The officers, employees, and agents of the Participating Public Agency nor the Participating Public Agency ("NFE") must neither solicit nor accept gratuities, favors, or anything of monetary value from contractors or parties to subcontracts. However, NFE's may set standards for situations in which the financial interest is de minimus, not substantial, or the gift is an unsolicited item of nominal value. 2 C.F.R. § 200.318(c)(1). d. Violations. The NFE's written standards of conduct must provide for disciplinary actions to be applied for violations of such standards by officers, employees, or agents of the NFE. 2 C.F.R. § 200.318(c)(1). For example, the penalty for a NFE's employee may be dismissal, and the penalty for a contractor might be the termination of the contract.

Contractor Integrity

A contractor must have a satisfactory record of integrity and business ethics. Contractors that are debarred or suspended, as described in and subject to the debarment and suspension regulations implementing Executive Order 12549, *Debarment and Suspension* (1986) and Executive Order 12689, *Debarment and Suspension* (1989) at 2 C.F.R. Part 180 and the Department of Homeland Security's regulations at 2 C.F.R. Part 3000 (Non-procurement Debarment and Suspension), must be rejected and cannot receive contract awards at any level.

Public Policy

A contractor must comply with the public policies of the Federal Government and state, local government, or tribal government. This includes, among other things, past and current compliance with the:
a. Equal opportunity and nondiscrimination laws
b. Five affirmative steps described at 2 C.F.R. § 200.321(b) for all subcontracting under contracts supported by FEMA financial assistance; and FEMA Procurement Guidance June 21, 2016 Page IV- 7
c. Applicable prevailing wage laws, regulations, and executive orders

Affirmative Steps

For any subcontracting opportunities, Contractor must take the following Affirmative steps:

1. Placing qualified small and minority businesses and women's business enterprises on solicitation lists;
2. Assuring that small and minority businesses, and women's business enterprises are solicited whenever they are potential sources;
3. Dividing total requirements, when economically feasible, into smaller tasks or quantities to permit maximum participation by small and minority businesses, and women's business enterprises;
4. Establishing delivery schedules, where the requirement permits, which encourage participation by small and minority businesses, and women's business enterprises; and
5. Using the services and assistance, as appropriate, of such organizations as the Small Business Administration and the Minority Business Development Agency of the Department of Commerce.

Prevailing Wage Requirements

When applicable, the awarded Contractor (s) and any and all subcontractor(s) agree to comply with all laws regarding prevailing wage rates including the Davis-Bacon Act, applicable to this solicitation and/or Participating Public Agencies. The Participating Public Agency shall notify the Contractor of the applicable pricing/prevailing wage rates and must apply any local wage rates requested. The Contractor and any subcontractor(s) shall comply with the prevailing wage rates set by the Participating Public Agency.

Federal Requirements

If products and services are issued in response to an emergency or disaster recovery the items below, located in this FEMA Special Conditions section of the Federal Funds Certifications, are activated and required when federal funding may be utilized.

2 C.F.R. § 200.326 and 2 C.F.R. Part 200, Appendix II, Required Contract Clauses

1. CONTRACT REMEDIES

Contracts for more than the federal simplified acquisition threshold (SAT), the dollar amount below which an NFE may purchase property or services using small purchase methods, currently set at $250,000 for procurements made on or after June 20, 2018,4 must address administrative, contractual, or legal remedies in instances where contractors violate or breach contract terms and must provide for sanctions and penalties as appropriate.

1.1 Applicability

This contract provision is required for contracts over the SAT, currently set at $250,000 for procurements made on or after June 20, 2018. Although not required for contracts at or below the SAT, FEMA suggests including a remedies provision.

1.2 Additional Considerations

For FEMA's Assistance to Firefighters Grant (AFG) Program, recipients must include a penalty clause in all contracts for any AFG-funded vehicle, regardless of dollar amount. In that situation, the contract must include a clause addressing that non-delivery by the contract's specified date or other vendor nonperformance will require a penalty of no less than $100 per day until such time that the vehicle, compliant with the terms of the contract, has been accepted by the recipient. This penalty clause should, however, account for force majeure or acts of God. AFG recipients should refer to the applicable year's Notice of Funding Opportunity (NOFO) for additional information, which can be accessed at FEMA.gov.

2. TERMINATION FOR CAUSE AND CONVENIENCE

a. Standard. All contracts in excess of $10,000 must address termination for cause and for convenience by the non-Federal entity, including the manner by which it will be effected and the basis for settlement. See 2 C.F.R. Part 200, Appendix II(B).

b. Applicability. This requirement applies to all FEMA grant and cooperative agreement programs.

3. EQUAL EMPLOYMENT OPPORTUNITY

When applicable:

a. Standard. Except as otherwise provided under 41 C.F.R. Part 60, all contracts that meet the definition of "federally assisted construction contract" in 41 C.F.R. § 60-1.3 must include the equal opportunity clause provided under 41 C.F.R. § 60- 1.4(b), in accordance with Executive Order 11246, *Equal Employment Opportunity* (30 Fed. Reg. 12319, 12935, 3 C.F.R. Part, 1964-1965 Comp., p. 339), as amended by Executive Order 11375, *Amending Executive Order 11246 Relating to Equal Employment Opportunity*, and implementing regulations at 41 C.F.R. Part 60 (Office of Federal Contract Compliance Programs, Equal Employment Opportunity, Department of Labor). See 2 C.F.R. Part 200, Appendix II(C).

b. Key Definitions.

i. Federally Assisted Construction Contract. The regulation at 41 C.F.R. § 60-1.3 defines a "federally assisted construction contract" as any agreement or modification thereof between any applicant and a person for construction work which is paid for in whole or in part with funds obtained from the Government or borrowed on the credit of the Government pursuant to any Federal program involving a grant, contract, loan, insurance, or guarantee, or undertaken pursuant to any Federal program involving such grant, contract, loan, insurance, or guarantee, or any application or modification thereof approved by the Government for a grant, contract, loan, insurance, or guarantee under which the applicant itself participates in the construction work.

ii. Construction Work. The regulation at 41 C.F.R. § 60-1.3 defines "construction work" as the construction, rehabilitation, alteration, conversion, extension, demolition or repair of buildings, highways, or other changes or improvements to real property, including facilities providing utility services. The term also includes the supervision, inspection, and other onsite functions incidental to the actual construction.

c. Applicability. This requirement applies to all FEMA grant and cooperative agreement programs.

d. Required Language. The regulation at 41 C.F.R. Part 60-1.4(b) requires the insertion of the following contract clause.

During the performance of this contract, the contractor agrees as follows:

(1) The contractor will not discriminate against any employee or applicant for employment because of race, color, religion, sex, sexual orientation, gender identity, or national origin. The contractor will take affirmative action to ensure that applicants are employed, and that employees are treated during employment without regard to their race, color, religion, sex, sexual orientation, gender identity, or national origin. Such action shall include, but not be limited to the following:

Employment, upgrading, demotion, or transfer; recruitment or recruitment advertising; layoff or termination; rates of pay or other forms of compensation; and selection for training, including apprenticeship. The contractor agrees to post in conspicuous places, available to employees and applicants for employment, notices to be provided setting forth the provisions of this nondiscrimination clause.

(2) The contractor will, in all solicitations or advertisements for employees placed by or on behalf of the contractor, state that all qualified applicants will receive consideration for employment without regard to race, color, religion, sex, sexual orientation, gender identity, or national origin.

(3) The contractor will not discharge or in any other manner discriminate against any employee or applicant for employment because such employee or applicant has inquired about, discussed, or disclosed the compensation of the employee or applicant or another employee or applicant. This provision shall not apply to instances in which an employee who has access to the compensation information of other employees or applicants as a part of such employee's essential job functions discloses the compensation of such other employees or applicants to individuals who do not otherwise have access to such information, unless such disclosure is in response to a formal complaint or charge, in furtherance of an investigation, proceeding, hearing, or action, including an investigation conducted by the employer, or is consistent with the contractor's legal duty to furnish information.

(4) The contractor will send to each labor union or representative of workers with which he has a collective bargaining agreement or other contract or understanding, a notice to be provided advising the said labor union or workers' representatives of the contractor's commitments under this section and shall post copies of the notice in conspicuous places available to employees and applicants for employment.

(5) The contractor will comply with all provisions of Executive Order 11246 of September 24, 1965, and of the rules, regulations, and relevant orders of the Secretary of Labor.

(6) The contractor will furnish all information and reports required by Executive Order 11246 of September 24, 1965, and by rules, regulations, and orders of the Secretary of Labor, or pursuant thereto, and will permit access to his books, records, and accounts by the administering agency and the Secretary of Labor for purposes of investigation to ascertain compliance with such rules, regulations, and orders.

(7) In the event of the contractor's noncompliance with the nondiscrimination clauses of this contract or with any of the said rules, regulations, or orders, this contract may be canceled, terminated, or suspended in whole or in part and the contractor may be declared ineligible for further Government contracts or federally assisted construction contracts in accordance with procedures authorized in Executive Order 11246 of September 24, 1965, and such other sanctions may be imposed and remedies invoked as provided in Executive Order 11246 of September 24, 1965, or by rule, regulation, or order of the Secretary of Labor, or as otherwise provided by law.

(8) The contractor will include the portion of the sentence immediately preceding paragraph (1) and the provisions of paragraphs (1) through (8) in every subcontract or purchase order unless exempted by rules, regulations, or orders of the Secretary of Labor issued pursuant to section 204 of Executive Order 11246 of September 24, 1965, so that such provisions will be binding upon each subcontractor or vendor. The contractor will take such action with respect to any subcontract or purchase order as the administering agency may direct as a means of enforcing such provisions, including sanctions for noncompliance:

Provided, however, that in the event a contractor becomes involved in, or is threatened

with, litigation with a subcontractor or vendor as a result of such direction by the administering agency, the contractor may request the United States to enter into such litigation to protect the interests of the United States.

The applicant further agrees that it will be bound by the above equal opportunity clause with respect to its own employment practices when it participates in federally assisted construction work: *Provided,* That if the applicant so participating is a State or local government, the above equal opportunity clause is not applicable to any agency, instrumentality or subdivision of such government which does not participate in work on or under the contract.

The applicant agrees that it will assist and cooperate actively with the administering agency and the Secretary of Labor in obtaining the compliance of contractors and subcontractors with the equal opportunity clause and the rules, regulations, and relevant orders of the Secretary of Labor, that it will furnish the administering agency and the Secretary of Labor such information as they may require for the supervision of such compliance, and that it will otherwise assist the administering agency in the discharge of the agency's primary responsibility for securing compliance.

The applicant further agrees that it will refrain from entering into any contract or contract modification subject to Executive Order 11246 of September 24, 1965, with a contractor debarred from, or who has not demonstrated eligibility for, Government contracts and federally assisted construction contracts pursuant to the Executive Order and will carry out such sanctions and penalties for violation of the equal opportunity clause as may be imposed upon contractors and subcontractors by the administering agency or the Secretary of Labor pursuant to Part II, Subpart D of the Executive Order. In addition, the applicant agrees that if it fails or refuses to comply with these undertakings, the administering agency may take any or all of the following actions: Cancel, terminate, or suspend in whole or in part this grant (contract, loan, insurance, guarantee); refrain from extending any further assistance to the applicant under the program with respect to which the failure or refund occurred until satisfactory assurance of future compliance has been received from such applicant; and refer the case to the Department of Justice for appropriate legal proceedings.

4. DAVIS-BACON ACT

a. Standard. All prime construction contracts in excess of $2,000 awarded by non- Federal entities must include a provision for compliance with the Davis-Bacon Act (40 U.S.C. §§ 3141-3144 and 3146-3148) as supplemented by Department of Labor regulations at 29 C.F.R. Part 5 (Labor Standards Provisions Applicable to Contracts Covering Federally Financed and Assisted Construction). See 2 C.F.R. Part 200, Appendix II(D). In accordance with the statute, contractors must be required to pay wages to laborers and mechanics at a rate not less than the prevailing wages specified in a wage determination made by the Secretary of Labor. In addition, contractors must be required to pay wages not less than once a week.

b. Applicability. The Davis-Bacon Act applies to the Emergency Management Preparedness Grant Program, Homeland Security Grant Program, Nonprofit Security Grant Program, Tribal Homeland Security Grant Program, Port Security Grant Program, and Transit Security Grant Program.

c. Requirements. If applicable, the non-federal entity must do the following:

i. The non-Federal entity must place a copy of the current prevailing wage determination issued by the Department of Labor in each solicitation. The decision to award a contract or subcontract must be conditioned upon the acceptance of the wage determination. The non-Federal entity must report all suspected or

reported violations to the Federal awarding agency.

ii. Additionally, pursuant 2 C.F.R. Part 200, Appendix II(D), contracts subject to the Davis-Bacon Act, must also include a provision for compliance with the Copeland "Anti-Kickback" Act (40 U.S.C. § 3145), as supplemented by Department of Labor regulations at 29 C.F.R. Part 3 (Contractors and Subcontractors on Public Building or Public Work Financed in Whole or in Part by Loans or Grants from the United States). The Copeland Anti- Kickback Act provides that each contractor or subrecipient must be prohibited from inducing, by any means, any person employed in the construction, completion, or repair of public work, to give up any part of the compensation to which he or she is otherwise entitled. The non-Federal entity must report all suspected or reported violations to FEMA.

iii. Include a provision for compliance with the Davis-Bacon Act (40 U.S.C. 3141-3144, and 3146-3148) as supplemented by Department of Labor regulations (29 CFR Part 5, "Labor Standards Provisions Applicable to Contracts Covering Federally Financed and Assisted Construction").

Suggested Language. The following provides a sample contract clause:

Compliance with the Davis-Bacon Act.

a. All transactions regarding this contract shall be done in compliance with the Davis-Bacon Act (40 U.S.C. 3141- 3144, and 3146-3148) and the requirements of 29 C.F.R. pt. 5 as may be applicable. The contractor shall comply with 40 U.S.C. 3141-3144, and 3146-3148 and the requirements of 29 C.F.R. pt. 5 as applicable.

b. Contractors are required to pay wages to laborers and mechanics at a rate not less than the prevailing wages specified in a wage determination made by the Secretary of Labor.

c. Additionally, contractors are required to pay wages not less than once a week.

5. COPELAND ANTI-KICKBACK ACT

a. Standard. Recipient and subrecipient contracts must include a provision for compliance with the Copeland "Anti-Kickback" Act (40 U.S.C. 3145), as supplemented by Department of Labor regulations (29 CFR Part 3, "Contractors and Subcontractors on Public Building or Public Work Financed in Whole or in Part by Loans or Grants from the United States").

b. Applicability. This requirement applies to all contracts for construction or repair work above $2,000 in situations where the Davis-Bacon Act also applies. It DOES NOT apply to the FEMA Public Assistance Program.

c. Requirements. If applicable, the non-federal entity must include a provision for compliance with the Copeland "Anti-Kickback" Act (40 U.S.C. § 3145), as supplemented by Department of Labor regulations at 29 C.F.R. Part 3 (Contractors and Subcontractors on Public Building or Public Work Financed in Whole or in Part by Loans or Grants from the United States). Each contractor or subrecipient must be prohibited from inducing, by any means, any person employed in the construction, completion, or repair of public work, to give up any part of the compensation to which he or she is otherwise entitled. The non-Federal entity must report all suspected or reported violations to FEMA. Additionally, in accordance with the regulation,

each contractor and subcontractor must furnish each week a statement with respect to the wages paid each of its employees engaged in work covered by the Copeland Anti-Kickback Act and the Davis Bacon Act during the preceding weekly payroll period. The report shall be delivered by the contractor or subcontractor, within seven days after the regular payment date of the payroll period, to a representative of a Federal or State agency in charge at the site of the building or work.

Sample Language. The following provides a sample contract clause:

Compliance with the Copeland "Anti-Kickback" Act.

a. Contractor. The contractor shall comply with 18 U.S.C. §874, 40 U.S.C. § 3145, and the requirements of 29 C.F.R. pt. 3 as may be applicable, which are incorporated by reference into this contract.

b. Subcontracts. The contractor or subcontractor shall insert in any subcontracts the clause above and such other clauses as FEMA may by appropriate instructions require, and also a clause requiring the subcontractors to include these clauses in any lower tier subcontracts. The prime contractor shall be responsible for the compliance by any subcontractor or lower tier subcontractor with all of these contract clauses.

c. Breach. A breach of the contract clauses above may be grounds for termination of the contract, and for debarment as a contractor and subcontractor as provided in 29 C.F.R. §5.12."

6. CONTRACT WORK HOURS AND SAFETY STANDARDSACT

a. Standard. Where applicable (see 40 U.S.C. §§ 3701-3708), all contracts awarded by the non-Federal entity in excess of $100,000 that involve the employment of mechanics or laborers must include a provision for compliance with 40 U.S.C. §§ 3702 and 3704, as supplemented by Department of Labor regulations at 29 C.F.R. Part 5. See 2 C.F.R. Part 200, Appendix II(E). Under 40 U.S.C. § 3702, each contractor must be required to compute the wages of every mechanic and laborer on the basis of a standard work week of 40 hours. Work in excess of the standard work week is permissible provided that the worker is compensated at a rate of not less than one and a half times the basic rate of pay for all hours worked in excess of 40 hours in the work week. Further, no laborer or mechanic must be required to work in surroundings or under working conditions which are unsanitary, hazardous, or dangerous.

b. Applicability. This requirement applies to all FEMA contracts awarded by the non- federal entity in excess of $100,000 under grant and cooperative agreement programs that involve the employment of mechanics or laborers. It is applicable to construction work. These requirements do not apply to the purchase of supplies or materials or articles ordinarily available on the open market, or contracts for transportation or transmission of intelligence.

c. Suggested Language. The regulation at 29 C.F.R. § 5.5(b) provides contract clause language concerning compliance with the Contract Work Hours and Safety Standards Act. FEMA suggests including the following contract clause:

Compliance with the Contract Work Hours and Safety Standards Act.

(1) *Overtime requirements.* No contractor or subcontractor contracting for any part of

the contract work which may require or involve the employment of laborers or mechanics shall require or permit any such laborer or mechanic in any workweek in which he or she is employed on such work to work in excess of forty hours in such workweek unless such laborer or mechanic receives compensation at a rate not less than one and one-half times the basic rate of pay for all hours worked in excess of forty hours in such workweek.

(2) *Violation; liability for unpaid wages; liquidated damages.* In the event of any violation of the clause set forth in paragraph (b)(1) of this section the contractor and any subcontractor responsible therefor shall be liable for the unpaid wages. In addition, such contractor and subcontractor shall be liable to the United States (in the case of work done under contract for the District of Columbia or a territory, to such District or to such territory), for liquidated damages. Such liquidated damages shall be computed with respect to each individual laborer or mechanic, including watchmen and guards, employed in violation of the clause set forth in paragraph (b)(1) of this section, in the sum of
$27 for each calendar day on which such individual was required or permitted to work in excess of the standard workweek of forty hours without payment of the overtime wages required by the clause set forth in paragraph (b)(1) of this section.

(3) *Withholding for unpaid wages and liquidated damages.* The Federal agency or loan/grant recipient shall upon its own action or upon written request of an authorized representative of the Department of Labor withhold or cause to be withheld, from any moneys payable on account of work performed by the contractor or subcontractor under any such contract or any other Federal contract with the same prime contractor, or any other federally-assisted contract subject to the Contract Work Hours and Safety Standards Act, which is held by the same prime contractor, such sums as may be determined to be necessary to satisfy any liabilities of such contractor or subcontractor for unpaid wages and liquidated damages as provided in the clause set forth in paragraph (b)(2) of this section.

(4) *Subcontracts.* The contractor or subcontractor shall insert in any subcontracts the clauses set forth in paragraph (b)(1) through (4) of this section and also a clause requiring the subcontractors to include these clauses in any lower tier subcontracts. The prime contractor shall be responsible for compliance by any subcontractor or lower tier subcontractor with the clauses set forth in paragraphs (b)(1) through (4) of this section.

7. RIGHTS TO INVENTIONS MADE UNDER A CONTRACT OR AGREEMENT

a. Standard. If the FEMA award meets the definition of "funding agreement" under 37 C.F.R. § 401.2(a) and the non-Federal entity wishes to enter into a contract with a small business firm or nonprofit organization regarding the substitution of parties, assignment or performance of experimental, developmental, or research work under that "funding agreement," the non- Federal entity must comply with the requirements of 37 C.F.R. Part 401 (Rights to Inventions Made by Nonprofit Organizations and Small Business Firms Under Government Grants, Contracts and Cooperative Agreements), and any implementing regulations issued by FEMA. See 2 C.F.R. Part 200, Appendix II(F).

b. Applicability. This requirement applies to "*funding agreements*," but it DOES NOT apply to the Public Assistance, Hazard Mitigation Grant Program, Fire Management Assistance Grant Program, Crisis Counseling Assistance and Training Grant Program, Disaster Case Management Grant Program, and Federal Assistance to Individuals and Households – Other Needs Assistance Grant Program, as FEMA awards under these programs do not meet the definition of "funding agreement."

c. Funding Agreements Definition. The regulation at 37 C.F.R. § 401.2(a) defines "funding agreement" as any contract, grant, or cooperative agreement entered into between any

Federal agency, other than the Tennessee Valley Authority, and any contractor for the performance of experimental, developmental, or research work funded in whole or in part by the Federal government. This term also includes any assignment, substitution of parties, or subcontract of any type entered into for the performance of experimental, developmental, or research work under a funding agreement as defined in the first sentence of this paragraph.

8. CLEAN AIR ACT AND THE FEDERAL WATER POLLUTION CONTROL ACT

a. Standard. If applicable, contracts must contain a provision that requires the contractor to agree to comply with all applicable standards, orders, or regulations issued pursuant to the Clean Air Act (42 U.S.C. §§ 7401-7671q.) and the Federal Water Pollution Control Act as amended (33 U.S.C. §§ 1251-1387). Violations must be reported to FEMA and the Regional Office of the Environmental Protection Agency. See 2 C.F.R. Part 200, Appendix II(G).

b. Applicability. This requirement applies to contracts awarded by a non-federal entity of amounts in excess of $150,000 under a federal grant.

c. Suggested Language. The following provides a sample contract clause.

Clean Air Act

1. The contractor agrees to comply with all applicable standards, orders or regulations issued pursuant to the Clean Air Act, as amended, 42 U.S.C. § 7401 et seq.

2. The contractor agrees to report each violation to the Participating Public Agency and understands and agrees that the Participating Public Agency will, in turn, report each violation as required to assure notification to the Federal Emergency Management Agency, and the appropriate Environmental Protection Agency Regional Office.

3. The contractor agrees to include these requirements in each subcontract exceeding $150,000 financed in whole or in part with Federal assistance provided by FEMA.

Federal Water Pollution Control Act

1. The contractor agrees to comply with all applicable standards, orders, or regulations issued pursuant to the Federal Water Pollution Control Act, as amended, 33 U.S.C. 1251 et seq.

2. The contractor agrees to report each violation to the Participating Public Agency and understands and agrees that the Participating Public Agency will, in turn, report each violation as required to assure notification to the Federal Emergency Management Agency, and the appropriate Environmental Protection Agency Regional Office.

3. The contractor agrees to include these requirements in each subcontract exceeding $150,000 financed in whole or in part with Federal assistance provided by FEMA.

9. DEBARMENT AND SUSPENSION

a. Standard. Non-Federal entities and contractors are subject to the debarment and suspension regulations implementing Executive Order 12549, *Debarment and Suspension* (1986) and Executive Order 12689, *Debarment and Suspension* (1989) at 2 C.F.R. Part 180 and the Department of Homeland Security's regulations at 2 C.F.R. Part 3000 (Non-procurement Debarment and Suspension).

b. Applicability. This requirement applies to all FEMA grant and cooperative agreement programs.

c. Requirements.

i. These regulations restrict awards, subawards, and contracts with certain parties that are debarred, suspended, or otherwise excluded from or ineligible for participation in Federal assistance programs and activities. See 2 C.F.R. Part 200, Appendix II(H); and 2 C.F.R. § 200.213. A contract award must not be made to parties listed in the SAM Exclusions. SAM Exclusions is the list maintained by the General Services Administration that contains the names of parties debarred, suspended, or otherwise excluded by agencies, as well as parties declared ineligible under statutory or regulatory authority other than Executive Order 12549. SAM exclusions can be accessed at www.sam.gov. See 2 C.F.R. § 180.530.

ii. In general, an "excluded" party cannot receive a Federal grant award or a contract within the meaning of a "covered transaction," to include subawards and subcontracts. This includes parties that receive Federal funding indirectly, such as contractors to recipients and subrecipients. The key to the exclusion is whether there is a "covered transaction," which is any non-procurement transaction (unless excepted) at either a "primary" or "secondary" tier. Although "covered transactions" do not include contracts awarded by the Federal Government for purposes of the non-procurement common rule and DHS's implementing regulations, it does include some contracts awarded by recipients and subrecipients.

iii. Specifically, a covered transaction includes the following contracts for goods or services:

1. The contract is awarded by a recipient or subrecipient in the amount of at least $25,000.

2. The contract requires the approval of FEMA, regardless of amount.

3. The contract is for federally-required audit services.

4. A subcontract is also a covered transaction if it is awarded by the contractor of a recipient or subrecipient and requires either the approval of FEMA or is in excess of $25,000.

d. Suggested Language. The following provides a debarment and suspension clause. It incorporates an optional method of verifying that contractors are not excluded or disqualified.

Suspension and Debarment

(1) This contract is a covered transaction for purposes of 2 C.F.R. pt. 180 and 2 C.F.R.

pt. 3000. As such, the contractor is required to verify that none of the contractor's principals (defined at 2 C.F.R. § 180.995) or its affiliates (defined at 2 C.F.R. § 180.905) are excluded (defined at 2 C.F.R. § 180.940) or disqualified (defined at 2 C.F.R. § 180.935).

(2) The contractor must comply with 2 C.F.R. pt. 180, subpart C and2 C.F.R. pt. 3000, subpart C, and must include a requirement to comply with these regulations in any lower tier covered transaction it enters into.

(3) This certification is a material representation of fact relied upon by the Participating Public Agency. If it is later determined that the contractor did not comply with 2 C.F.R. pt. 180, subpart C and 2 C.F.R. pt. 3000, subpart C, in addition to remedies available to the Participating Public Agency, the Federal Government may pursue available remedies, including but not limited to suspension and/or debarment.

(4) The bidder or proposer agrees to comply with the requirements of 2 C.F.R. pt. 180, subpart C and 2 C.F.R. pt. 3000, subpart C while this offer is valid and throughout the period of any contract that may arise from this offer. The bidder or proposer further agrees to include a provision requiring such compliance in its lower tier covered transactions.

10. BYRD ANTI-LOBBYING AMENDMENT

a. Standard. Each tier certifies to the tier above that it will not and has not used Federal appropriated funds to pay any person or organization for influencing or attempting to influence an officer or employee of any agency, a Member of Congress, officer or employee of Congress, or an employee of a Member of Congress in connection with obtaining any Federal contract, grant or any other award covered by 31 U.S.C. § 1352. FEMA's regulation at 44 C.F.R. Part 18 implements the requirements of 31 U.S.C. § 1352 and provides, in Appendix A to Part 18, a copy of the certification that is required to be completed by each entity as described in 31 U.S.C. § 1352. Each tier must also disclose any lobbying with non-Federal funds that takes place in connection with obtaining any Federal award. Such disclosures are forwarded from tier to tier up to the Federal awarding agency.

b. Applicability. This requirement applies to all FEMA grant and cooperative agreement programs. Contractors that apply or bid for a contract of $100,000 or more under a federal grant must file the required certification. See 2 C.F.R. Part 200, Appendix II(I); 31 U.S.C. § 1352; and 44 C.F.R. Part 18.

c. Suggested Language.

Byrd Anti-Lobbying Amendment, 31 U.S.C. § 1352 (as amended)

Contractors who apply or bid for an award of $100,000 or more shall file the required certification. Each tier certifies to the tier above that it will not and has not used Federal appropriated funds to pay any person or organization for influencing or attempting to influence an officer or employee of any agency, a Member of Congress, officer or employee of Congress, or an employee of a Member of Congress in connection with obtaining any Federal contract, grant, or any other award covered by 31 U.S.C. § 1352. Each tier shall also disclose any lobbying with non-Federal funds that takes place in connection with obtaining any Federal award. Such disclosures are forwarded from tier to tier up to the recipient who in turn will forward the certification(s) to the awarding agency.

d. Required Certification. If applicable, contractors must sign and submit to the non-federal entity the following certification.

APPENDIX A, 44 C.F.R. PART 18 – CERTIFICATION REGARDING LOBBYING

Certification for Contracts, Grants, Loans, and Cooperative Agreements

The undersigned certifies, to the best of his or her knowledge and belief, that:

1. No Federal appropriated funds have been paid or will be paid, by or on behalf of the undersigned, to any person for influencing or attempting to influence an officer or employee of an agency, a Member of Congress, an officer or employee of Congress, or an employee of a Member of Congress in connection with the awarding of any Federal contract, the making of any Federal grant, the making of any Federal loan, the entering into of any cooperative agreement, and the extension, continuation, renewal, amendment, or modification of any Federal contract, grant, loan, or cooperative agreement.

2. If any funds other than Federal appropriated funds have been paid or will be paid to any person for influencing or attempting to influence an officer or employee of any agency, a Member of Congress, an officer or employee of Congress, or an employee of a Member of Congress in connection with this Federal contract, grant, loan, or cooperative agreement, the undersigned shall complete and submit Standard Form-LLL, "Disclosure Form to Report Lobbying," in accordance with its instructions.

3. The undersigned shall require that the language of this certification be included in the award documents for all subawards at all tiers (including subcontracts, subgrants, and contracts under grants, loans, and cooperative agreements) and that all subrecipients shall certify and disclose accordingly.

This certification is a material representation of fact upon which reliance was placed when this transaction was made or entered into. Submission of this certification is a prerequisite for making or entering into this transaction imposed by section 1352, title 31, U.S. Code. Any person who fails to file the required certification shall be subject to a civil penalty of not less than $10,000 and not more than $100,000 for each such failure.

The Contractor,_____, certifies or affirms the truthfulness and accuracy of each statement of its certification and disclosure, if any. In addition, the Contractor understands and agrees that the provisions of 31 U.S.C. Chap. 38, Administrative Remedies for False Claims and Statements, apply to this certification and disclosure, if any.

_____

Signature of Contractor's Authorized Official

_____

Name and Title of Contractor's Authorized Official

_____

Date

11. PROCUREMENT OF RECOVERED MATERIALS

a. Standard. A non-Federal entity that is a state agency or agency of a political subdivision of a state and its contractors must comply with Section 6002 of the Solid Waste Disposal Act, as amended by the Resource Conservation and Recovery Act. See 2 C.F.R. Part 200, Appendix II(J); and 2 C.F.R. §200.322.

b. Applicability. This requirement applies to all contracts awarded by a non- federal entity under FEMA grant and cooperative agreement programs.

c. Requirements. The requirements of Section 6002 include procuring only items designated in guidelines of the EPA at 40 C.F.R. Part 247 that contain the highest percentage of recovered materials practicable, consistent with maintaining a satisfactory level of competition, where the purchase price of the item exceeds $10,000 or the value of the quantity acquired by the preceding fiscal year exceeded $10,000; procuring solid waste management services in a manner that maximizes energy and resource recovery; and establishing an affirmative procurement program for procurement of recovered materials identified in the EPA guidelines.

d. Suggested Language.

i. In the performance of this contract, the Contractor shall make maximum use of products containing recovered materials that are EPA-designated items unless the product cannot be acquired—

1. Competitively within a timeframe providing for compliance with the contract performance schedule;
2. Meeting contract performance requirements; or
3. At a reasonable price.

ii. Information about this requirement, along with the list of EPA- designated items, is available at EPA's Comprehensive Procurement Guidelines web site, https://www.epa.gov/smm/comprehensive-procurement-guideline-cpg-program.

iii. The Contractor also agrees to comply with all other applicable requirements of Section 6002 of the Solid Waste Disposal Act."

12. DOMESTIC PREFERENCES FOR PROCUREMENTS

As appropriate, and to the extent consistent with law, CONTRACTOR should, to the greatest extent practicable under a federal award, provide a preference for the purchase, acquisition, or use of goods, products or materials produced in the United States. This includes, but is not limited to, iron, aluminum, steel, cement, and other manufactured products.

Applicability For purchases in support of FEMA declarations and awards issued on or after November 12, 2020, all FEMA recipients and subrecipients are required to include in all contracts and purchase orders for work or products a contract provision encouraging domestic preference for procurements.

Domestic Preference for Procurements As appropriate, and to the extent consistent with law, the contractor should, to the greatest extent practicable, provide a preference for the purchase, acquisition, or use of goods, products, or materials produced in the United States. This includes, but is not limited to iron, aluminum, steel, cement, and other manufactured products. For purposes of this clause: Produced in the United States means, for iron and steel products, that all

manufacturing processes, from the initial melting stage through the application of coatings, occurred in the United States. Manufactured products mean items and construction materials composed in whole or in part of non-ferrous metals such as aluminum; plastics and polymer-based products such as polyvinyl chloride pipe; aggregates such as concrete; glass, including optical fiber; and lumber."

13. **ACCESS TO RECORDS**

a. Standard. All recipients, subrecipients, successors, transferees, and assignees must acknowledge and agree to comply with applicable provisions governing DHS access to records, accounts, documents, information, facilities, and staff. Recipients must give DHS/FEMA access to, and the right to examine and copy, records, accounts, and other documents and sources of information related to the federal financial assistance award and permit access to facilities, personnel, and other individuals and information as may be necessary, as required by DHS regulations *and* other applicable laws or program guidance. See DHS Standard Terms and Conditions: Version 8.1 (2018). Additionally, Section 1225 of the Disaster Recovery Reform Act of 2018 prohibits FEMA from providing reimbursement to any state, local, tribal, or territorial government, or private non-profit for activities made pursuant to a contract that purports to prohibit audits or internal reviews by the FEMA administrator or Comptroller General.

Access to Records. The following access to records requirements apply to this contract:

i. The Contractor agrees to provide Participating Public Agency, the FEMA Administrator, the Comptroller General of the United States, or any of their authorized representatives access to any books, documents, papers, and records of the Contractor which are directly pertinent to this contract for the purposes of making audits, examinations, excerpts, and transcriptions.

ii. The Contractor agrees to permit any of the foregoing parties to reproduce by any means whatsoever or to copy excerpts and transcriptions as reasonably needed.

iii. The Contractor agrees to provide the FEMA Administrator or his authorized representatives access to construction or other work sites pertaining to the work being completed under the contract.

iv. In compliance with the Disaster Recovery Act of 2018, the Participating Public Agency and the Contractor acknowledge and agree that no language in this contract is intended to prohibit audits or internal reviews by the FEMA Administrator or the Comptroller General of the United States.

14. CHANGES

a. Standard. To be eligible for FEMA assistance under the non-Federal entity's FEMA grant or cooperative agreement, the cost of the change, modification, change order, or constructive change must be allowable, allocable, within the scope of its grant or cooperative agreement, and reasonable for the completion of project scope.

b. Applicability. FEMA recommends, therefore, that a non-Federal entity include a changes clause in its contract that describes how, if at all, changes can be made by either party to alter the method, price, or schedule of the work without breaching the contract. The language of the clause may differ depending on the nature of the contract and the end-item procured.

15. DHS SEAL, LOGO, AND FLAGS

a. Standard. Recipients must obtain permission prior to using the DHS seal(s), logos, crests, or reproductions of flags or likenesses of DHS agency officials. See DHS Standard Terms and Conditions: Version 8.1 (2018).

b. Applicability. FEMA recommends that all non-Federal entities place in their contracts a provision that a contractor shall not use the DHS seal(s), logos, crests, or reproductions of flags or likenesses of DHS agency officials without specific FEMA pre-approval.

c. "The contractor shall not use the DHS seal(s), logos, crests, or reproductions of flags or likenesses of DHS agency officials without specific FEMA pre-approval.

16. COMPLIANCE WITH FEDERAL LAW, REGULATIONS, AND EXECUTIVE ORDERS

a. Standard. The recipient and its contractors are required to comply with all Federal laws, regulations, and executive orders.

b. Applicability. FEMA recommends that all non-Federal entities place into their contracts an acknowledgement that FEMA financial assistance will be used to fund the contract along with the requirement that the contractor will comply with all applicable Federal law, regulations, executive orders, and FEMA policies, procedures, and directives.

c. "This is an acknowledgement that FEMA financial assistance will be used to fund all or a portion of the contract. The contractor will comply with all applicable Federal law, regulations, executive orders, FEMA policies, procedures, and directives."

17. NO OBLIGATION BY FEDERAL GOVERNMENT

a. Standard. FEMA is not a party to any transaction between the recipient and its contractor. FEMA is not subject to any obligations or liable to any party for any matter relating to the contract.

b. Applicability. FEMA recommends that the non-Federal entity include a provision in its contract that states that the Federal Government is not a party to the contract and is not subject to any obligations or liabilities to the non-Federal entity, contractor, or any other party pertaining to any matter resulting from the contract.

c. "The Federal Government is not a party to this contract and is not subject to any obligations or liabilities to the non-Federal entity, contractor, or any other party pertaining to any matter resulting from the contract."

18. PROGRAM FRAUD AND FALSE OR FRAUDULENT STATEMENTS OR RELATED ACTS

a. Standard. Recipients must comply with the requirements of The False Claims Act (31 U.S.C. §§ 3729-3733) which prohibits the submission of false or fraudulent claims for payment to the federal government. See DHS Standard Terms and Conditions: Version 8.1 (2018); and 31 U.S.C. §§ 3801-3812, which details the administrative remedies for false claims and statements made. The non-Federal entity must include a provision in its contract that the contractor acknowledges that 31 U.S.C. Chap. 38 (Administrative Remedies for False Claims and Statements) applies to its actions pertaining to the contract.

b. Applicability. FEMA recommends that the non-Federal entity include a provision in its contract that the contractor acknowledges that 31 U.S.C. Chap. 38 (Administrative Remedies for False Claims and Statements) applies to its actions pertaining to the contract.

c. "The Contractor acknowledges that 31 U.S.C. Chap. 38 (Administrative Remedies for False Claims and Statements) applies to the Contractor's actions pertaining to this contract."

EXAMPLE

Offeror agrees to comply with all terms and conditions outlined in the FEMA Special Conditions section of this solicitation.

Offeror's Name: _____

Address, City, State, and Zip Code:

_____

Phone Number: _____ Fax Number: _____

Printed Name and Title of Authorized Representative:

_____

Email Address: _____

Signature of Authorized Representative: _____

Date: _____

Exhibit C

FEMA Special Conditions

FEMA SPECIAL CONDITIONS

Awarded Supplier(s) may need to respond to events and losses where products and services are needed for the immediate and initial response to emergency situations such as, but not limited to, water damage, fire damage, vandalism cleanup, biohazard cleanup, sewage decontamination, deodorization, and/or wind damage during a disaster or emergency situation. By submitting a proposal, the Supplier is accepted these FEMA Special Conditions required by the Federal Emergency Management Agency (FEMA).

"Contract" in the below pages under FEMA SPECIAL CONDITIONS is also referred to and defined as the "Master Agreement".

"Contractor" in the below pages under FEMA SPECIAL CONDITIONS is also referred to and defined as "Supplier" or "Awarded Supplier".

Conflicts of Interest

No employee, officer, or agent may participate in the selection, award, or administration of a contract supported by a FEMA award if he or she has a real or apparent conflict of interest. Such a conflict would arise when the employee, officer, or agent, any member of his or her immediate family, his or her partner, or an organization which employs or is about to employ any of these parties, has a financial or other interest in or a tangible personal benefit from a firm considered for award. 2 C.F.R. § 200.318(c)(1); See also Standard Form 424D, ¶ 7; Standard Form 424B, ¶ 3. i. FEMA considers a "financial interest" to be the potential for gain or loss to the employee, officer, or agent, any member of his or her immediate family, his or her partner, or an organization which employs or is about to employ any of these parties as a result of the particular procurement. The prohibited financial interest may arise from ownership of certain financial instruments or investments such as stock, bonds, or real estate, or from a salary, indebtedness, job offer, or similar interest that might be affected by the particular procurement. ii. FEMA considers an "apparent" conflict of interest to exist where an actual conflict does not exist, but where a reasonable person with knowledge of the relevant facts would question the impartiality of the employee, officer, or agent participating in the procurement. c. Gifts. The officers, employees, and agents of the Participating Public Agency nor the Participating Public Agency ("NFE") must neither solicit nor accept gratuities, favors, or anything of monetary value from contractors or parties to subcontracts. However, NFE's may set standards for situations in which the financial interest is de minimus, not substantial, or the gift is an unsolicited item of nominal value. 2 C.F.R. § 200.318(c)(1). d. Violations. The NFE's written standards of conduct must provide for disciplinary actions to be applied for violations of such standards by officers, employees, or agents of the NFE. 2 C.F.R. § 200.318(c)(1). For example, the penalty for a NFE's employee may be dismissal, and the penalty for a contractor might be the termination of the contract.

Contractor Integrity

A contractor must have a satisfactory record of integrity and business ethics. Contractors that are debarred or suspended as described in Chapter III, ¶ 6.d must be rejected and cannot receive contract awards at any level.

Public Policy

A contractor must comply with the public policies of the Federal Government and state, local government, or tribal government. This includes, among other things, past and current compliance with the:

a. Equal opportunity and nondiscrimination laws

b. Five affirmative steps described at 2 C.F.R. § 200.321(b) for all subcontracting under contracts supported by FEMA financial assistance; and FEMA Procurement Guidance June 21, 2016 Page IV- 7

c. Applicable prevailing wage laws, regulations, and executive orders

Affirmative Steps

For any subcontracting opportunities, Contractor must take the following Affirmative steps:

1. Placing qualified small and minority businesses and women's business enterprises on solicitation lists;
2. Assuring that small and minority businesses, and women's business enterprises are solicited whenever they are potential sources;
3. Dividing total requirements, when economically feasible, into smaller tasks or quantities to permit maximum participation by small and minority businesses, and women's business enterprises;
4. Establishing delivery schedules, where the requirement permits, which encourage participation by small and minority businesses, and women's business enterprises; and
5. Using the services and assistance, as appropriate, of such organizations as the Small Business Administration and the Minority Business Development Agency of the Department of Commerce.

Prevailing Wage Requirements

When applicable, the awarded Contractor (s) and any and all subcontractor(s) agree to comply with all laws regarding prevailing wage rates including the Davis-Bacon Act, applicable to this solicitation and/or Participating Public Agencies. The Participating Public Agency shall notify the Contractor of the applicable pricing/prevailing wage rates and must apply any local wage rates requested. The Contractor and any subcontractor(s) shall comply with the prevailing wage rates set by the Participating Public Agency.

Federal Requirements

If products and services are issued in response to an emergency or disaster recovery the items below, located in this FEMA Special Conditions section of the Federal Funds Certifications, are activated and required when federal funding may be utilized.

2 C.F.R. § 200.326 and 2 C.F.R. Part 200, Appendix II, Required Contract Clauses

1. Termination for Convenience:

The right to terminate this Contract for the convenience of the Participating Public Agency is retained by the Participating Public Agency. In the event of a termination for convenience by the Participating Public Agency, the Participating Public Agency shall, at least ten (10) calendar days in advance, deliver written notice of the termination for convenience to Contractor. Upon Contractor's receipt of such written notice, Contractor immediately shall cease the performance of the Work and shall take reasonable and appropriate action to secure and protect the Work then in place. Contractor shall then be paid by the Participating Public Agency, in accordance with the terms and provisions of the Contract Documents, an amount not to exceed the actual labor costs incurred, the actual cost of all materials installed and the actual cost of all materials stored at the project site or away from the project site, as approved in writing by the Participating Public Agency but not yet paid for and which cannot be returned, and actual, reasonable and documented demobilization costs, if any, paid by Contractor and approved by the Participating Public Agency in connection with the Scope of Work in place which is completed as of the date of termination by the Participating Public Agency and that is in conformance with the Contract Documents, less all amounts previously paid for the Work. No amount ever shall be owed or paid to

Contractor for lost or anticipated profits on any part of the Scope of Work not performed or for consequential damages of any kind.

2. Equal Employment Opportunity:

The Participating Public Agency highly encourages Contractors to implement Affirmative Action practices in their employment programs. This means Contractor should not discriminate against any employee or applicant for employment because of race, color, religion, sex, pregnancy, sexual orientation, political belief or affiliation, age, disability or genetic information.

During the performance of this contract, the contractor agrees as follows:

(1) The contractor will not discriminate against any employee or applicant for employment because of race, color, religion, sex, sexual orientation, gender identity, or national origin. The contractor will take affirmative action to ensure that applicants are employed, and that employees are treated during employment, without regard to their race, color, religion, sex, sexual orientation, gender identity, or national origin. Such action shall include, but not be limited to the following: Employment, upgrading, demotion, or transfer, recruitment or recruitment advertising; layoff or termination; rates of pay or other forms of compensation; and selection for training, including apprenticeship. The contractor agrees to post in conspicuous places, available to employees and applicants for employment, notices to be provided by the contracting officer setting forth the provisions of this nondiscrimination clause.
(2) The contractor will, in all solicitations or advertisements for employees placed by or on behalf of the contractor, state that all qualified applicants will receive consideration for employment without regard to race, color, religion, sex, sexual orientation, gender identity, or national origin.
(3) The contractor will not discharge or in any other manner discriminate against any employee or applicant for employment because such employee or applicant has inquired about, discussed, or disclosed the compensation of the employee or applicant or another employee or applicant. This provision shall not apply to instances in which an employee who has access to the compensation information of other employees or applicants as a part of such employee's essential job functions discloses the compensation of such other employees or applicants to individuals who do not otherwise have access to such information, unless such disclosure is in response to a formal complaint or charge, in furtherance of an investigation, proceeding, hearing, or action, including an investigation conducted by the employer, or is consistent with the contractor's legal duty to furnish information.
(4) The contractor will send to each labor union or representative of workers with which it has a collective bargaining agreement or other contract or understanding, a notice to be provided by the agency contracting officer, advising the labor union or workers' representative of the contractor's commitments under section 202 of Executive Order 11246 of September 24, 1965, and shall post copies of the notice in conspicuous places available to employees and applicants for employment.
(5) The contractor will comply with all provisions of Executive Order 11246 of September 24, 1965, and of the rules, regulations, and relevant orders of the Secretary of Labor.
(6) The contractor will furnish all information and reports required by Executive Order 11246 of September 24, 1965, and by the rules, regulations, and orders of the Secretary of Labor, or pursuant thereto, and will permit access to his books, records, and accounts by the contracting agency and the Secretary of Labor for purposes of investigation to ascertain compliance with such rules, regulations, and orders.

(7) In the event of the contractor's non-compliance with the nondiscrimination clauses of this contract or with any of such rules, regulations, or orders, this contract may be canceled, terminated or suspended in whole or in part and the contractor may be declared ineligible for further Government contracts in accordance with procedures authorized in Executive Order 11246 of September 24, 1965, and such other sanctions may be imposed and remedies invoked as provided in Executive Order 11246 of September 24, 1965, or by rule, regulation, or order of the Secretary of Labor, or as otherwise provided by law.

(8) The contractor will include the provisions of paragraphs (1) through (8) in every subcontract or purchase order unless exempted by rules, regulations, or orders of the Secretary of Labor issued pursuant to section 204 of Executive Order 11246 of September 24, 1965, so that such provisions will be binding upon each subcontractor or vendor. The contractor will take such action with respect to any subcontract or purchase order as may be directed by the Secretary of Labor as a means of enforcing such provisions including sanctions for noncompliance: *Provided,* however, that in the event the contractor becomes involved in, or is threatened with, litigation with a subcontractor or vendor as a result of such direction, the contractor may request the United States to enter into such litigation to protect the interests of the United States.

3. "During the performance of this contract, the contractor agrees as follows:

(1) The contractor will not discriminate against any employee or applicant for employment because of race, color, religion, sex, or national origin. The contractor will take affirmative action to ensure that applicants are employed, and that employees are treated during employment without regard to their race, color, religion, sex, or national origin. Such action shall include, but not be limited to the following: Employment, upgrading, demotion, or transfer; recruitment or recruitment advertising; layoff or termination; rates of pay or other forms of compensation; and selection for training, including apprenticeship. The contractor agrees to post in conspicuous places, available to employees and applicants for employment, notices to be provided setting forth the provisions of this nondiscrimination clause.

(2) The contractor will, in all solicitations or advertisements for employees placed by or on behalf of the contractor, state that all qualified applicants will receive considerations for employment without regard to race, color, religion, sex, or national origin.

(3) The contractor will send to each labor union or representative of workers with which he has a collective bargaining agreement or other contract or understanding, a notice to be provided advising the said labor union or workers' representatives of the contractor's commitments under this section, and shall post copies of the notice in conspicuous places available to employees and applicants for employment.

(4) The contractor will comply with all provisions of Executive Order 11246 of September 24, 1965, and of the rules, regulations, and relevant orders of the Secretary of Labor.

(5) The contractor will furnish all information and reports required by Executive Order 11246 of September 24, 1965, and by rules, regulations, and orders of the Secretary of Labor, or pursuant thereto, and will permit access to his books, records, and accounts by the administering agency and the Secretary of Labor for purposes of investigation to ascertain compliance with such rules,

regulations, and orders.

(6) In the event of the contractor's noncompliance with the nondiscrimination clauses of this contract or with any of the said rules, regulations, or orders, this contract may be canceled, terminated, or suspended in whole or in part and the contractor may be declared ineligible for further Government contracts or federally assisted construction contracts in accordance with procedures authorized in Executive Order 11246 of September 24, 1965, and such other sanctions as may be imposed and remedies invoked as provided in Executive Order 11246 of September 24, 1965, or by rule, regulation, or order of the Secretary of Labor, or as otherwise provided bylaw.

(7) The contractor will include the portion of the sentence immediately preceding paragraph (1) and the provisions of paragraphs (1) through (7) in every subcontract or purchase order unless exempted by rules, regulations, or orders of the Secretary of Labor issued pursuant to section 204 of Executive Order 11246 of September 24, 1965, so that such provisions will be binding upon each subcontractor or vendor. The contractor will take such action with respect to any subcontract or purchase order as the administering agency may direct as a means of enforcing such provisions, including sanctions for noncompliance: Provided, however, That in the event a contractor becomes involved in, or is threatened with, litigation with a subcontractor or vendor as a result of such direction by the administering agency the contractor may request the United States to enter into such litigation to protect the interests of the United States."

4. Davis Bacon Act and Copeland Anti-KickbackAct.

   a. Applicability of Davis-Bacon Act. The Davis-Bacon Act only applies to the emergency Management Preparedness Grant Program, Homeland Security Grant Program, Nonprofit Security Grant Program, Tribal Homeland Security Grant Program, Port Security Grant Program, and Transit Security Grant Program. **It does not apply to other FEMA grant and cooperative agreement programs, including the Public Assistance Program**.

   b. All prime construction contracts in excess of $2,000 awarded by non-Federal entities must include a provision for compliance with the Davis-Bacon Act (40 U.S.C. §§ 3141-3144 and 3146-3148) as supplemented by Department of Labor regulations at 29 C.F.R. Part 5 (Labor Standards Provisions Applicable to Contracts Covering Federally Financed and Assisted Construction)). See 2 C.F.R. Part 200, Appendix II, ¶ D.

   c. In accordance with the statute, contractors must be required to pay wages to laborers and mechanics at a rate not less than the prevailing wages specified in a wage determination made by the Secretary of Labor. In addition, contractors must be required to pay wages not less than once aweek.

   d. The non-Federal entity must place a copy of the current prevailing wage determination issued by the Department of Labor in each solicitation. The decision to award a contract or subcontract must be conditioned upon the acceptance of the wage determination. The non-Federal entity must report all suspected or reported violations to the Federal awarding agency.

   e. In contracts subject to the Davis-Bacon Act, the contracts must also include a provision for compliance with the Copeland "Anti-Kickback" Act (40 U.S.C. § 3145), as supplemented by Department of Labor regulations at 29 C.F.R. Part 3 (Contractors

and Subcontractors on Public Building or Public Work Financed in Whole or in Part by Loans or Grants from the United States). The Copeland Anti- Kickback Act provides that each contractor or subrecipient must be prohibited from inducing, by any means, any person employed in the construction, completion, or repair of public work, to give up any part of the compensation to which he or she is otherwise entitled. The non-Federal entity must report all suspected or reported violations to FEMA.

f. The regulation at 29 C.F.R. § 5.5(a) does provide the required contract clause that applies to compliance with both the Davis-Bacon and Copeland Acts. However, as discussed in the previous subsection, the Davis-Bacon Act does not apply to Public Assistance recipients and subrecipients. **In situations where the Davis-Bacon Act does not apply, neither does the Copeland "Anti-Kickback Act."** However, for purposes of grant programs where both clauses do apply, FEMA requires the following contract clause:

"Compliance with the Copeland "Anti-Kickback" Act.

(1) Contractor. The contractor shall comply with 18 U.S.C. § 874, 40U.S.C. § 3145, and the requirements of 29 C.F.R. pt. 3 as may be applicable, which are incorporated by reference into this contract.

(2) Subcontracts. The contractor or subcontractor shall insert in any subcontracts the clause above and such other clauses as the FEMA may by appropriate instructions require, and also a clause requiring the subcontractors to include these clauses in any lower tier subcontracts. The prime contractor shall be responsible for the compliance by any subcontractor or lower tier subcontractor with all of these contract clauses

(3) Breach. A breach of the contract clauses above may be grounds for termination of the contract, and for debarment as a contractor and subcontractor as provided in 29 C.F.R. § 5.12."

5. Contract Work Hours and SafetyStandards Act.

a. Applicability: This requirement applies to all FEMA grant and cooperative agreement programs.

b. Where applicable (see 40 U.S.C. § 3701), all contracts awarded by the non-Federal entity in excess of $100,000 that involve the employment of mechanics or laborers must include a provision for compliance with 40 U.S.C. §§ 3702 and 3704, as supplemented by Department of Labor regulations at 29 C.F.R. Part 5. See 2 C.F.R. Part 200, Appendix II, ¶ E.

c. Under 40 U.S.C. § 3702, each contractor must be required to compute the wages of every mechanic and laborer on the basis of a standard work week of 40 hours. Work in excess of the standard work week is permissible provided that the worker is compensated at a rate of not less than one and a half times the basic rate of pay for all hours worked in excess of 40 hours in the workweek.

d. The requirements of 40 U.S.C. § 3704 are applicable to construction work and provide that no laborer or mechanic must be required to work in surroundings or under working conditions which are unsanitary, hazardous or dangerous. These requirements do not apply to the purchases of supplies or materials or articles ordinarily available on the open market, or contracts for transportation or transmission ofintelligence.

e. The regulation at 29 C.F.R. § 5.5(b) provides the required contract clause concerning compliance with the Contract Work Hours and Safety Standards Act:

"Compliance with the Contract Work Hours and Safety Standards Act.

(1) Overtime requirements. No contractor or subcontractor contracting for any part of the contract work which may require or involve the employment of laborers or mechanics shall require or permit any such laborer or mechanic in any workweek in which he or she is employed on such work to work in excess of forty hours in such workweek unless such laborer or mechanic receives compensation at a rate not less than one and one-half times the basic rate of pay for all hours worked in excess of forty hours in such workweek.

(2) Violation; liability for unpaid wages; liquidated damages. In the event of any violation of the clause set forth in paragraph (1) of this section the contractor and any subcontractor responsible therefor shall be liable for the unpaid wages. In addition, such contractor and subcontractor shall be liable to the United States (in the case of work done under contract for the District of Columbia or a territory, to such District or to such territory), for liquidated damages. Such liquidated damages shall be computed with respect to each individual laborer or mechanic, including watchmen and guards, employed in violation of the clause set forth in paragraph (1) of this section, in the sum of $10 for each calendar day on which such individual was required or permitted to work in excess of the standard workweek of forty hours without payment of the overtime wages required by the clause set forth in paragraph (1) of this section.

(3) Withholding for unpaid wages and liquidated damages. The (write in the name of the Federal agency or the loan or grant recipient) shall upon its own action or upon written request of an authorized representative of the Department of Labor withhold or cause to be withheld, from any moneys payable on account of work performed by the contractor or subcontractor under any such contract or any other Federal contract with the same prime contractor, or any other federally-assisted contract subject to the Contract Work Hours and Safety Standards Act, which is held by the same prime contractor, such sums as may be determined to be necessary to satisfy any liabilities of such contractor or subcontractor for unpaid wages and liquidated damages as provided in the clause set forth in paragraph (2) of this section.

(4) Subcontracts. The contractor or subcontractor shall insert in any subcontracts the clauses set forth in paragraph (1) through (4) of this section and also a clause requiring the subcontractors to include these clauses in any lower tier subcontracts. The prime contractor shall be responsible for compliance by any subcontractor or lower tier subcontractor with the clauses set forth in paragraphs (1) through (4) of this section."

6. Rights to Inventions Made Under a Contract or Agreement.

a. Stafford Act Disaster Grants. This requirement **does not apply to the Public Assistance**, Hazard Mitigation Grant Program, Fire Management Assistance Grant Program, Crisis Counseling Assistance and Training Grant Program, Disaster Case Management Grant Program, and Federal Assistance to Individuals and Households – Other Needs

Assistance Grant Program, as

FEMA awards under these programs do not meet the definition of "funding agreement."

b. If the FEMA award meets the definition of "funding agreement" under 37 C.F.R.§ 401.2(a) and the non-Federal entity wishes to enter into a contract with a small business firm or nonprofit organization regarding the substitution of parties, assignment or performance of experimental, developmental, or research work under that "funding agreement," the non-Federal entity must comply with the requirements of 37 C.F.R. Part 401 (Rights to Inventions Made by Nonprofit Organizations and Small Business Firms Under Government Grants, Contracts and Cooperative Agreements), and any implementing regulations issued by FEMA. See 2 C.F.R. Part 200, Appendix II, ¶ F.
c. The regulation at 37 C.F.R. § 401.2(a) currently defines "funding agreement" as any contract, grant, or cooperative agreement entered into between any Federal agency, other than the Tennessee Valley Authority, and any contractor for the performance of experimental, developmental, or research work funded in whole or in part by the Federal government. This term also includes any assignment, substitution of parties, or subcontract of any type entered into for the performance of experimental, developmental, or research work under a funding agreement as defined in the first sentence of this paragraph.

7. Clean Air Act and the Federal Water Pollution Control Act. Contracts of amounts in excess of $150,000 must contain a provision that requires the contractor to agree to comply with all applicable standards, orders, or regulations issued pursuant to the Clean Air Act (42 U.S.C.§§ 7401-7671q) and the Federal Water Pollution Control Act as amended (33 U.S.C. §§ 1251-1387). Violations must be reported to FEMA and the Regional Office of the Environmental Protection Agency. See 2 C.F.R. Part 200, Appendix II, ¶ G.

a. The following provides a sample contract clause concerning compliance for contracts of amounts in excess of $150,000:
"Clean Air Act

(1) The contractor agrees to comply with all applicable standards, orders or regulations issued pursuant to the Clean Air Act, as amended, 42 U.S.C.§ 7401 et seq.
(2) The contractor agrees to report each violation to the (name of the state agency or local or Indian tribal government) and understands and agrees that the (name of the state agency or local or Indian tribal government) will, in turn, report each violation as required to assure notification to the (name of recipient), Federal Emergency Management Agency, and the appropriate Environmental Protection Agency Regional Office.
(3) The contractor agrees to include these requirements in each subcontract exceeding $150,000 financed in whole or in part with Federal assistance provided by FEMA.

Federal Water Pollution Control Act

(1) The contractor agrees to comply with all applicable standards, orders or regulations issued pursuant to the Federal Water Pollution Control Act, as amended, 33 U.S.C. 1251 et seq.

(2) The contractor agrees to report each violation to the (name of the state agency or local or Indian tribal government) and understands and agrees that the (name of the state agency or local or Indian tribal government) will, in turn, report each violation as required to assure notification to the (name of recipient), Federal Emergency Management Agency, and the appropriate Environmental Protection Agency Regional Office.

(3) The contractor agrees to include these requirements in each subcontract exceeding $150,000 financed in whole or in part with Federal assistance provided by FEMA."

8. Debarment and Suspension.

a. Applicability: This requirement applies to all FEMA grant and cooperative agreement programs.

b. Non-federal entities and contractors are subject to the debarment and suspension regulations implementing Executive Order 12549, *Debarment and Suspension* (1986) and Executive Order 12689, *Debarment and Suspension* (1989) at 2 C.F.R. Part 180 and the Department of Homeland Security's regulations at 2 C.F.R. Part 3000 (Non procurement Debarment and Suspension).

c. These regulations restrict awards, subawards, and contracts with certain parties that are debarred, suspended, or otherwise excluded from or ineligible for participation in Federal assistance programs and activities. See 2 C.F.R. Part 200, Appendix II, ¶ H; and *Procurement Guidance for Recipients and Subrecipients Under 2 C.F.R. Part 200 (Uniform Rules): Supplement to the Public Assistance Procurement Disaster Assistance Team (PDAT) Field Manual* Chapter IV, ¶ 6.d, and Appendix C, ¶ 2 [hereinafter *PDAT Supplement*]. A contract award must not be made to parties listed in the SAM Exclusions. SAM Exclusions is the list maintained by the General Services Administration that contains the names of parties debarred, suspended, or otherwise excluded by agencies, as well as parties declared ineligible under statutory or regulatory authority other than Executive Order 12549. SAM exclusions can be accessed at www.sam.gov. See 2 C.F.R. § 180.530; *PDAT Supplement,* Chapter IV, ¶ 6.d and Appendix C, ¶ 2.

d. In general, an "excluded" party cannot receive a Federal grant award or a contract within the meaning of a "covered transaction," to include subawards and subcontracts. This includes parties that receive Federal funding indirectly, such as contractors to recipients and subrecipients. The key to the exclusion is whether there is a "covered transaction," which is any non-procurement transaction (unless excepted) at either a "primary" or "secondary" tier. Although "covered transactions" do not include contracts awarded by the Federal Government for purposes of the non-procurement common rule and DHS's implementing regulations, it does include some contracts awarded by recipients and subrecipient.

e. Specifically, a covered transaction includes the following contracts for goods or services:

(1) The contract is awarded by a recipient or subrecipient in the amount of at least $25,000.

(2) The contract requires the approval of FEMA, regardless of amount.

(3) The contract is for federally required audit services.

(4) A subcontract is also a covered transaction if it is awarded by the contractor of a recipient or subrecipient and requires either the approval of FEMA or is in excess of $25,000.

d. The following provides a debarment and suspension clause. It incorporates an optional method of verifying that contractors are not excluded or disqualified:

"Suspension and Debarment

(1) This contract is a covered transaction for purposes of 2 C.F.R. pt. 180 and 2 C.F.R. pt. 3000. As such the contractor is required to verify that none of the contractor, its principals (defined at 2 C.F.R. § 180.995), or its affiliates (defined at 2 C.F.R. § 180.905) are excluded (defined at 2 C.F.R.§ 180.940) or disqualified (defined at 2 C.F.R. § 180.935).

(2) The contractor must comply with 2 C.F.R. pt. 180, subpart C and 2 C.F.R. pt. 3000, subpart C and must include a requirement to comply with these regulations in any lower tier covered transaction it enters into.

(3) This certification is a material representation of fact relied upon by (insert name of subrecipient). If it is later determined that the contractor did not comply with 2 C.F.R. pt. 180, subpart C and 2 C.F.R. pt. 3000, subpart C, in addition to remedies available to (name of state agency serving as recipient and name of subrecipient), the Federal Government may pursue available remedies, including but not limited to suspension and/or debarment.

(4) The bidder or proposer agrees to comply with the requirements of 2 C.F.R. pt. 180, subpart C and 2 C.F.R. pt. 3000, subpart C while this offer is valid and throughout the period of any contract that may arise from this offer. The bidder or proposer further agrees to include a provision requiring such compliance in its lower tier covered transactions."

9. Byrd Anti-Lobbying Amendment.

a. Applicability: This requirement applies to all FEMA grant and cooperative agreement programs.

b. Contractors that apply or bid for an award of $100,000 or more must file the required certification. See 2 C.F.R. Part 200, Appendix II, ¶ I; 44 C.F.R. Part 18; *PDAT Supplement*, Chapter IV, 6.c; Appendix C, ¶ 4.

c. Each tier certifies to the tier above that it will not and has not used Federal appropriated funds to pay any person or organization for influencing or attempting to influence an officer or employee of any agency, a member of Congress, officer or employee of Congress, or an employee of a member of Congress in connection with obtaining any Federal contract, grant or any other award covered by 31 U.S.C. § 1352. Each tier must also disclose any lobbying with non-Federal funds that takes place in connection with obtaining any Federal award. Such disclosures are forwarded from tier to tier up to the non-Federal award. See *PDAT Supplement*, Chapter IV, ¶ 6.c and Appendix C, ¶ 4.

d. The following provides a Byrd Anti-Lobbying contract clause:

"Byrd Anti-Lobbying Amendment, 31 U.S.C. § 1352 (as amended)

Contractors who apply or bid for an award of $100,000 or more shall file the required certification. Each tier certifies to the tier above that it will not and has not used Federal appropriated funds to pay any person or organization for influencing or attempting to influence an officer or employee of any agency, a member of Congress, officer or employee of Congress, or an employee of a member of Congress in connection with obtaining any Federal contract,

grant, or any other award covered by 31 U.S.C. § 1352. Each tier shall also disclose any lobbying with non-Federal funds that takes place in connection with obtaining any Federal award. Such disclosures are forwarded from tier to tier up to the recipient."

APPENDIX A, 44 C.F.R. PART 18 – CERTIFICATION REGARDING LOBBYING

Certification for Contracts, Grants, Loans, and Cooperative Agreements (To be submitted with each bid or offer exceeding $100,000)
The undersigned [Contractor] certifies, to the best of his or her knowledge, that:

1. No Federal appropriated funds have been paid or will be paid, by or on behalf of the undersigned, to any person for influencing or attempting to influence an officer or employee of an agency, a Member of Congress, an officer or employee of Congress, or an employee of a Member of Congress in connection with the awarding of any Federal contract, the making of any Federal grant, the making of any Federal loan, the entering into of any cooperative agreement, and the extension, continuation, renewal, amendment, or modification of any Federal contract, grant, loan, or cooperative agreement.
2. If any funds other than Federal appropriated funds have been paid or will be paid to any person for influencing or attempting to influence an officer or employee of any agency, a Member of Congress, an officer or employee of Congress, or an employee of a Member of Congress in connection with this Federal contract, grant, loan, or cooperative agreement, the undersigned shall complete and submit Standard Form- LLL, "Disclosure Form to Report Lobbying," in accordance with its instructions.

3. The undersigned shall require that the language of this certification be included in the award documents for all subawards at all tiers (including subcontracts, subgrants, and contracts under grants, loans, and cooperative agreements) and that all subrecipients shall certifyand disclose accordingly.

This certification is a material representation of fact upon which reliance was placed when this transaction was made or entered into. Submission of this certification is a prerequisite for making or entering into this transaction imposed by 31, U.S.C. § 1352 (as amended by the Lobbying Disclosure Act of 1995). Any person who fails to file the required certification shall be subject to a civil penalty of not less than $10,000 and not more than $100,000 for each such failure.

The Contractor,_____, certifies or affirms the truthfulness and accuracyof each statement of its certification and disclosure, if any. In addition, the Contractor understands and agrees that the provisions of 31 U.S.C. § 3801 *et seq*., apply to this certification and disclosure, ifany.

_____

Signature of Contractor's Authorized Official

_____

Name and Title of Contractor's Authorized Official

_____

Date"

10. Procurement of Recovered Materials.

a. Applicability: This requirement applies to all FEMA grant and cooperative agreement programs.

b. A non-Federal entity that is a state agency or agency of a political subdivision of a state and its contractors must comply with Section 6002 of the Solid Waste Disposal Act, Pub. L. No. 89-272 (1965) (codified as amended by the Resource Conservation and Recovery Act at 42 U.S.C. § 6962). See 2 C.F.R. Part 200, Appendix II, ¶ J; 2 C.F.R. § 200.322; *PDAT Supplement*, Chapter V, ¶ 7.

c. The requirements of Section 6002 include procuring only items designated in guidelines of the EPA at 40 C.F.R. Part 247 that contain the highest percentage of recovered materials practicable, consistent with maintaining a satisfactory level of competition, where the purchase price of the item exceeds $10,000 or the value of the quantity acquired by the preceding fiscal year exceeded $10,000; procuring solid waste management services in a manner that maximizes energy and resource recovery; and establishing an affirmative procurement program for procurement of recovered materials identified in the EPA guidelines.

d. The following provides the clause that a state agency or agency of a political subdivision of a state and its contractors can include in contracts meeting the above contract thresholds:

"(1) In the performance of this contract, the Contractor shall make maximum use of products containing recovered materials that are EPA- designated items unless the product cannot be acquired—

(i) Competitively within a timeframe providing for compliance with the contract performance schedule;
(ii) Meeting contract performance requirements; or
(iii) At a reasonable price.

(2) Information about this requirement, along with the list of EPA- designate items, is available at EPA's Comprehensive Procurement Guidelines web site, https://www.epa.gov/smm/comprehensive- procurement-guideline-cpg-program."

11. Additional FEMA Requirements.

a. The Uniform Rules authorize FEMA to require additional provisions for non-Federal entity contracts. FEMA, pursuant to this authority, requires or recommends the following:

b. Changes.

To be eligible for FEMA assistance under the non-Federal entity's FEMA grant or cooperative agreement, the cost of the change, modification, change order, or constructive change must be allowable, allocable, within the scope of its grant or

cooperative agreement, and reasonable for the completion of project scope. FEMA recommends, therefore, that a non-Federal entity include a changes clause in its contract that describes how, if at all, changes can be made by either party to alter the method, price, or schedule of the work without breaching the contract. The language of the clause may differ depending on the nature of the contract and the end-item procured.

c. Access to Records.
All non-Federal entities must place into their contracts a provision that all contractors and their successors, transferees, assignees, and subcontractors acknowledge and agree to comply with applicable provisions governing Department and FEMA access to records, accounts, documents, information, facilities, and staff. See DHS Standard Terms and Conditions, v 3.0, ¶ XXVI (2013).

d. The following provides a contract clause regarding access to records:

"Access to Records. The following access to records requirements apply to this contract:

(1) The contractor agrees to provide (insert name of state agency or local or Indian tribal government), (insert name of recipient), the FEMA Administrator, the Comptroller General of the United States, or any of their authorized representatives access to any books, documents, papers, and records of the Contractor which are directly pertinent to this contract for the purposes of making audits, examinations, excerpts, and transcriptions.

(2) The Contractor agrees to permit any of the foregoing parties to reproduce by any means whatsoever or to copy excerpts and transcriptions as reasonably needed.

(3) The contractor agrees to provide the FEMA Administrator or his authorized representatives access to construction or other work sites pertaining to the work being completed under thecontract."

12. DHS Seal, Logo, and Flags.
    a. All non-Federal entities must place in their contracts a provision that a contractor shall not use the DHS seal(s), logos, crests, or reproductions of flags or likenesses of DHS agency officials without specific FEMA pre-approval. See DHS Standard Terms and Conditions, v 3.0, ¶ XXV (2013).
    b. The following provides a contract clause regarding DHS Seal, Logo, and Flags: "The contractor shall not use the DHS seal(s), logos, crests, or reproductions of flags or likenesses of DHS agency officials without specific FEMA pre- approval."

13. Compliance with Federal Law, Regulations, and Executive Orders.
    a. All non-Federal entities must place into their contracts an acknowledgement that FEMA financial assistance will be used to fund the contract along with the requirement that the contractor will comply with all applicable federal law, regulations, executive orders, and FEMA policies, procedures, and directives.
    b. The following provides a contract clause regarding Compliance with Federal Law, Regulations, and Executive Orders: "This is an acknowledgement that FEMA financial assistance will be used to fund the contract only. The contractor will comply will all applicable federal law, regulations, executive orders, FEMA policies, procedures, and

directives."

14. No Obligation by Federal Government.
    a. The non-Federal entity must include a provision in its contract that states that the Federal Government is not a party to the contract and is not subject to any obligations or liabilities to the non-Federal entity, contractor, or any other party pertaining to any matter resulting from the contract.
    b. The following provides a contract clause regarding no obligation by the Federal Government: "The Federal Government is not a party to this contract and is not subject to any obligations or liabilities to the non-Federal entity, contractor, or any other party pertaining to any matter resulting from the contract."

15. Program Fraud and False or Fraudulent Statements or Related Acts.
    a. The non-Federal entity must include a provision in its contract that the contractor acknowledges that 31 U.S.C. Chap. 38 (Administrative Remedies for False Claims and Statements) applies to its actions pertaining to the contract.
    b. The following provides a contract clause regarding Fraud and False or Fraudulent or Related Acts: "The contractor acknowledges that 31 U.S.C. Chap. 38 (Administrative Remedies for False Claims and Statements) applies to the contractor's actions pertaining to this contract."

Additional contract clauses per 2 C.F.R. § 200.325

For applicable construction/reconstruction/renovation and related services: A payment and performance bond are both required for 100 percent of the contract price. A "performance bond" is one executed in connection with a contract to secure fulfillment of all the contractor's obligations under such contract. A "payment bond" is one executed in connection with a contract to assure payment as required by law of all persons supplying labor and material in the execution of the work provided in the contract.

Offeror agrees to comply with all terms and conditions outlined in the FEMA Special Conditions section of this solicitation.

Offeror's Name:

_____

Address, City, State, and Zip Code:

_____

Phone Number:_____ _Fax Number:_____

Printed Name and Title of Authorized

Representative:_____

Email Address:

_____

Signature of Authorized Representative: _____

Date: _____

The OMNIA Partners marketing team will work in conjunction with Gordian and the Supplier to promote the Master Agreement to both existing Participating Public Agencies and prospective Public Agencies through channels that may include:

A. Marketing collateral (print, electronic, email, presentations)

B. Website

C. Trade shows/conferences/meetings

D. Advertising

E. Social Media

The OMNIA Partners sales teams will work in conjunction with Gordian and the Supplier to promote the Master Agreement to both existing Participating Public Agencies and prospective Public Agencies through initiatives that may include:

A. Individual sales calls

B. Joint sales calls

C. Communications/customer service

D. Training sessions for Public Agency teams

E. Training sessions for Supplier teams

The OMNIA Partners contracting teams will work in conjunction with Gordian and the Supplier to promote the Master Agreement to both existing Participating Public Agencies and prospective Public Agencies through:

A. Serving as the subject matter expert for questions regarding joint powers authority and state statutes and regulations for cooperative purchasing

B. Training sessions for Public Agency teams

C. Training sessions for Supplier teams

D. Regular business reviews to monitor program success

E. General contract administration

1.3 Estimated Volume

The dollar volume purchased under the Master Agreement is estimated to be approximately $200M annually. While no minimum volume is guaranteed to Supplier, the estimated annual volume is projected based on the current annual volumes among the Principal Procurement Agency, other Participating Public Agencies that are anticipated to utilize the resulting Master Agreement to be made available to them through OMNIA Partners, and volume growth into other Public Agencies through a coordinated marketing approach between Supplier and OMNIA Partners.

1.4 Award Basis

The basis of any contract award resulting from this Solicitation made by Principal Procurement Agency will, at OMNIA Partners' option, be the basis of award on a local,

regional, and/or national level through OMNIA Partners. If multiple Suppliers are awarded by Principal Procurement Agency under the Master Agreement, those same Suppliers will be required to extend the Master Agreement to Participating Public Agencies through OMNIA Partners and Gordian. Utilization of the Master Agreement by Participating Public Agencies will be at the discretion of the individual Participating Public Agency. Certain terms of the Master Agreement specifically applicable to the Principal Procurement Agency (e.g. governing law) are subject to modification for each Participating Public Agency as Supplier, such Participating Public Agency and OMNIA Partners shall agree without being in conflict with the Master Agreement. Participating Agencies may request to enter into a separate supplemental agreement to further define the level of service requirements over and above the minimum defined in the Master Agreement (i.e. invoice requirements, order requirements, specialized delivery, diversity requirements such as minority and woman owned businesses, historically underutilized business, governing law, etc.) ("Supplemental Agreement"). It shall be the responsibility of the Supplier to comply, when applicable, with the prevailing wage legislation in effect in the jurisdiction of the Participating Agency. It shall further be the responsibility of the Supplier to monitor the prevailing wage rates as established by the appropriate department of labor for any increase in rates during the term of the Master Agreement and adjust wage rates accordingly. In instances where supplemental terms and conditions create additional risk and cost for Supplier, Supplier and Participating Public Agency may negotiate additional pricing above and beyond the stated contract not-to-exceed pricing so long as the added price is commensurate with the additional cost incurred by the Supplier. Any supplemental agreement developed as a result of the Master Agreement is exclusively between the Participating Agency and the Supplier (Contract Sales are reported to OMNIA Partners).

All signed Supplemental Agreements and purchase orders issued and accepted by the Supplier may survive expiration or termination of the Master Agreement. Participating Agencies' purchase orders may exceed the term of the Master Agreement if the purchase order is issued prior to the expiration of the Master Agreement.

1.5 Objectives of Piggyback Program

This Solicitation is intended to achieve the following objectives regarding availability through OMNIA Partners' program:

A. Provide a comprehensive competitively solicited and awarded piggyback agreement offering the Services and/or Products covered by this solicitation to Participating Public Agencies;

B. Establish the Master Agreement as the Supplier's primary go to market strategy to Public Agencies;

C. Achieve cost savings for Supplier and Public Agencies through a single solicitation process that will reduce the Supplier's need to respond to multiple solicitations and Public Agencies need to conduct their own solicitation process;

D. Combine the aggregate purchasing volumes of Participating Public Agencies to achieve cost effective pricing.

2.0 REPRESENTATIONS AND COVENANTS

As a condition to Supplier entering into the Master Agreement, which would be available to all Public Agencies, Supplier must make certain representations, warranties and covenants to both the Principal Procurement Agency and OMNIA Partners designed to ensure the success of the Master Agreement for all Participating Public Agencies as well as the Supplier.

2.1 Corporate Commitment

Supplier commits that (1) the Master Agreement has received all necessary corporate authorizations and support of the Supplier's executive management, (2) the Master Agreement is Supplier's primary "go to market" strategy for Public Agencies, (3) the Master Agreement will be promoted to all Public Agencies, including any existing customers, and Supplier will transition existing customers, upon their request, to the Master Agreement, and (4) that the Supplier has read and agrees to the terms and conditions of the Administration Agreement with OMNIA Partners and will execute such agreement concurrent with and as a condition of its execution of the Master Agreement with the Principal Procurement Agency. Supplier will identify an executive corporate sponsor and a separate cooperative account manager within the Solicitation response that will be responsible for the overall management of the Master Agreement.

2.2 Pricing Commitment

Supplier commits the not-to-exceed pricing provided under the Master Agreement pricing is its lowest available (net to buyer) to Public Agencies and further commits that if a Participating Public Agency is eligible for lower pricing through a different contract (to include a national, state, regional or local or cooperative contract held by the Supplier), the Supplier will match such lower pricing to that Participating Public Agency under the Master Agreement.

2.3 Sales Commitment

Supplier commits to aggressively market the Master Agreement as its go to market strategy in this defined sector and that its sales force will be trained, engaged and committed to offering the Master Agreement to Public Agencies through OMNIA Partners whether state or nationwide. Supplier commits that all Master Agreement sales will be accurately and timely reported to Gordian. Supplier also commits its sales force will be compensated, including sales incentives, for sales to Public Agencies under the Master Agreement in a consistent or better manner compared to sales to Public Agencies if the Supplier were not awarded the Master Agreement.

3.0 SUPPLIER RESPONSE

Supplier should supply the following information, to the best of their ability, in order for the Principal Procurement Agency to determine Supplier's abilities to extend the resulting Master Agreement to Participating Public Agencies through OMNIA Partners.

3.1 Company

A. Brief history and description of Supplier to include experience providing similar products and services.

B. Total number and location of employees, and if applicable sales persons, sales persons) employed by Supplier.

C. Number and location of support centers (if applicable) and location of corporate office.

D. Annual sales for the three previous fiscal years.

   a. Submit FEIN and Dunn & Bradstreet report.

E. Describe any green or environmental initiatives or policies.

F. Describe any diversity programs or partners supplier does business with and how Participating Agencies may use diverse partners through the Master Agreement. Indicate how, if at all, pricing changes when using the diversity program. If there are any diversity programs, provide a list of diversity alliances and a copy of their certifications.

G. Indicate if supplier holds any of the below certifications in any classified areas and include proof of such certification in the response:

   a. Minority Women Business Enterprise

      ☐ Yes ☐ No

      If yes, list certifying agency: _____

   b. Small Business Enterprise (SBE) or Disadvantaged Business Enterprise (DBE)

      ☐ Yes ☐ No

      If yes, list certifying agency: _____

   c. Historically Underutilized Business (HUB)

      ☐ Yes ☐ No

      If yes, list certifying agency: _____

   d. Historically Underutilized Business Zone Enterprise (HUBZone)

      ☐ Yes ☐ No

      If yes, list certifying agency: _____

   e. Other recognized diversity certificate holder

      ☐ Yes ☐ No

      If yes, list certifying agency: _____

H. List any relationships with subcontractors or affiliates intended to be used when providing services and identify if subcontractors meet minority-owned standards. If any, list which certifications subcontractors hold and certifying agency.

I. Describe how supplier differentiates itself from its competitors.

J. Describe any present or past litigation, bankruptcy or reorganization involving supplier.

K. Felony Conviction Notice: Indicate if the supplier

   a. is a publicly held corporation and this reporting requirement is not applicable;

   b. is not owned or operated by anyone who has been convicted of a felony; or

   c. is owned or operated by and individual(s) who has been convicted of a felony and provide the names and convictions.

L. Describe any debarment or suspension actions taken against supplier

3.2 Distribution, Logistics

A. Each offeror awarded an item under this solicitation may offer their complete product and service offering/a balance of line. Describe the full line of products and services offered by supplier.

B. While the intention is for products and services to be provided locally to agencies within the Principal Procurement Agency's region and/or state, include both any region or additional states where products and services will not be offered under the Master Agreement, including U.S. Territories and Outlying Areas.

C. Identify all other companies that will be involved in providing the products/service to the end user.

D. Provide the number, size and location of Supplier's offices or facilities.

3.3 Marketing and Sales

A. Provide a detailed plan beginning from award date of the Master Agreement describing the strategy to immediately implement the Master Agreement as supplier's primary go to market strategy for Public Agencies to supplier's teams, to include, but not limited to:

   i. Executive leadership endorsement and sponsorship of the award as the public sector go-to-market strategy within first 10 days

   ii. Training and education of Supplier's employees (and if applicable sales force)with participation from the Supplier's executive leadership, along with the OMNIA Partners team within first 90 days

B. Provide a detailed plan beginning from award date of the Master Agreement describing the strategy to market the Master Agreement to current Participating Public Agencies, existing Public Agency customers of Supplier, as well as to prospective Public Agencies nationwide immediately upon award, that could include, but is not limited to:

   i. Creation and distribution of a co-branded press release to trade publications

   ii. Announcement, Master Agreement details and contact information published on the Supplier's website within first 90 days

   iii. Design, publication and distribution of co-branded marketing materials within first 90 days

iv. Commitment to attendance and participation with OMNIA Partners at national (i.e. NIGP Annual Forum, NPI Conference, etc.), regional (i.e. Regional NIGP Chapter Meetings, Regional Cooperative Summits, etc.) and supplier-specific trade shows, conferences and meetings throughout the term of the Master Agreement

v. Commitment to attend, exhibit and participate at the NIGP Annual Forum in an area reserved by OMNIA Partners for partner suppliers. Booth space will be purchased and staffed by Supplier. In addition, Supplier commits to provide reasonable assistance to the overall promotion and marketing efforts for the NIGP Annual Forum, as directed by OMNIA Partners.

vi. Design and publication of national and regional advertising in trade publications throughout the term of the Master Agreement

vii. Ongoing marketing and promotion of the Master Agreement throughout its term (case studies, collateral pieces, presentations, promotions, etc.)

viii. Dedicated OMNIA Partners internet web-based homepage on Supplier's website with:

- OMNIA Partners standard logo;
- Copy of original Request for Proposal;
- Copy of Master Agreement and amendments between Principal Procurement Agency and Supplier;
- Summary of Products and pricing;
- Marketing Materials
- Electronic link to OMNIA Partners' website including the online registration page;
- A dedicated toll-free number and email address for OMNIA Partners

C. Describe how Supplier will transition any existing Public Agency customers' accounts to the Master Agreement available through OMNIA Partners. Include a list of current cooperative contracts (regional and national) Supplier holds and describe how the Master Agreement will be positioned among the other cooperative agreements.

D. Acknowledge Supplier agrees to provide its logo(s) to OMNIA Partners and agrees to provide permission for reproduction of such logo in marketing communications and promotions. Acknowledge that use of OMNIA Partners logo will require permission for reproduction, as well.

E. Confirm Supplier will be proactive in direct sales of Supplier's goods and services to Public Agencies and the timely follow up to leads established by OMNIA Partners. All sales materials are to use the OMNIA Partners logo. At a minimum, the Supplier's sales initiatives should communicate:

i. Master Agreement was competitively solicited and publicly awarded by a Principal Procurement Agency

ii. Best government pricing

iii. No cost to participate

iv. Non-exclusive

F. Confirm Supplier will train its sales force on the Master Agreement. At a minimum, sales training should include:

i. Key features of Master Agreement

ii. Working knowledge of the solicitation process

iii. Awareness of the range of Public Agencies that can utilize the Master Agreement through OMNIA Partners

iv. Knowledge of benefits of the use of cooperative contracts

G. Provide the name, title, email and phone number for the person(s), who will be responsible for:

i. Executive Support
ii. Marketing
iii. Sales
iv. Sales Support
v. Financial Reporting
vi. Accounts Payable
vii. Contracts

H. Describe in detail how Supplier's organization (and if applicable, sales force) is structured, including contact information for the highest-level executive in charge of the sales team.

I. Explain in detail how the sales teams will work with Gordian and the OMNIA Partners team to implement, grow and service the program.

I. Explain in detail how Supplier will manage the overall program throughout the term of the Master Agreement, including ongoing coordination of marketing and sales efforts, timely new Participating Public Agency account set-up, timely contract administration, etc.

J. State the amount of Supplier's Public Agency sales for the previous fiscal year. Provide a list of Supplier's top 5 Public Agency customers, the total purchases for each for the previous fiscal year along with a key contact for each.

K. Describe Supplier's information systems capabilities and limitations regarding order management through receipt of payment, including description of multiple platforms that may be used for any of these functions.

L. Even though it is anticipated many Public Agencies will be able to utilize the Master Agreement without further formal solicitation, there may be circumstances where Public Agencies will issue their own solicitations. The following options are available when responding to a solicitation for Products covered under the Master Agreement.

i. Respond with Master Agreement pricing (Contract Sales reported to OMNIA Partners).

ii. If competitive conditions require pricing lower than the standard Master Agreement not-to-exceed pricing, Supplier may respond with lower pricing through the Master Agreement. If Supplier is awarded the contract, the sales are reported as Contract Sales to OMNIA Partners under the Master Agreement.

iii. Respond with pricing higher than Master Agreement only in the unlikely event that the Public Agency refuses to utilize Master Agreement (Contract Sales are not reported to OMNIA Partners).

iv. If alternative or multiple proposals are permitted, respond with pricing higher than Master Agreement, and include Master Agreement as the alternate or additional proposal.

v. Detail Supplier's strategies under these options when responding to a solicitation.

(The rest of this page is intentionally left blank)

EXHIBIT B

MASTER INTERGOVERNMENTAL COOPERATIVE PURCHASING AGREEMENT, EXAMPLE

MASTER INTERGOVERNMENTAL COOPERATIVE PURCHASING AGREEMENT

This Master Intergovernmental Cooperative Purchasing Agreement (this "**Agreement**") is entered into by and between those certain government agencies that execute a Principal Procurement Agency Certificate ("**Principal Procurement Agencies**") with National Intergovernmental Purchasing Alliance Company, a Delaware corporation d/b/a OMNIA Partners, Public Sector and/or Communities Program Management, LLC, a California limited liability company d/b/a U.S. Communities (collectively, "**OMNIA Partners**"), in its capacity as the cooperative administrator, to be appended and made a part hereof and such other public agencies ("**Participating Public Agencies**") who register to participate in the cooperative purchasing programs administered by OMNIA Partners and its affiliates and subsidiaries (collectively, the "**OMNIA Partners Parties**") by either registering on the OMNIA Partners website (www.omniapartners.com/publicsector or any successor website), or by executing a copy of this Agreement.

RECITALS

WHEREAS, after a competitive solicitation and selection process by Principal Procurement Agencies, in compliance with their own policies, procedures, rules and regulations, a number of suppliers have entered into "**Master Agreements**" (herein so called) to provide a variety of goods, products and services ("**Products**") to the applicable Principal Procurement Agency and the Participating Public Agencies;

WHEREAS, Master Agreements are made available by Principal Procurement Agencies through the OMNIA Partners Parties and provide that Participating Public Agencies may purchase Products on the same terms, conditions and pricing as the Principal Procurement Agency, subject to any applicable federal and/or local purchasing ordinances and the laws of the State of purchase; and

WHEREAS, in addition to Master Agreements, the OMNIA Partners Parties may from time to time offer Participating Public Agencies the opportunity to acquire Products through other group purchasing agreements.

NOW, THEREFORE, in consideration of the mutual promises contained in this Agreement, and of the mutual benefits to result, the parties hereby agree as follows:

1. Each party will facilitate the cooperative procurement of Products.

2. The Participating Public Agencies shall procure Products in accordance with and subject to the relevant federal, state and local statutes, ordinances, rules and regulations that govern Participating Public Agency's procurement practices. The Participating Public Agencies hereby acknowledge and agree that it is the intent of the parties that all provisions of this Agreement and

that Principal Procurement Agencies' participation in the program described herein comply with all applicable laws, including but not limited to the requirements of 42 C.F.R. § 1001.952(j), as may be amended from time to time. The Participating Public Agencies further acknowledge and agree that they are solely responsible for their compliance with all applicable "safe harbor" regulations, including but not limited to any and all obligations to fully and accurately report discounts and incentives.

3. The Participating Public Agency represents and warrants that the Participating Public Agency is not a hospital or other healthcare provider and is not purchasing Products on behalf of a hospital or healthcare provider; provided that the foregoing shall not prohibit Participating Public Agency from furnishing health care services so long as the furnishing of healthcare services is not in furtherance of a primary purpose of the Participating Public Agency.

4. The cooperative use of Master Agreements shall be in accordance with the terms and conditions of the Master Agreements, except as modification of those terms and conditions is otherwise required by applicable federal, state or local law, policies or procedures.

5. The Principal Procurement Agencies will make available, upon reasonable request, Master Agreement information which may assist in improving the procurement of Products by the Participating Public Agencies.

6. The Participating Public Agency agrees the OMNIA Partners Parties may provide access to group purchasing organization ("**GPO**") agreements directly or indirectly by enrolling the Participating Public Agency in another GPO's purchasing program, provided that the purchase of Products through the OMNIA Partners Parties or any other GPO shall be at the Participating Public Agency's sole discretion.

7. The Participating Public Agencies (each a "**Procuring Party**") that procure Products through any Master Agreement or GPO Product supply agreement (each a "**GPO Contract**") will make timely payments to the distributor, manufacturer or other vendor (collectively, "**Supplier**") for Products received in accordance with the terms and conditions of the Master Agreement or GPO Contract, as applicable. Payment for Products and inspections and acceptance of Products ordered by the Procuring Party shall be the exclusive obligation of such Procuring Party. Disputes between Procuring Party and any Supplier shall be resolved in accordance with the law and venue rules of the State of purchase unless otherwise agreed to by the Procuring Party and Supplier.

8. The Procuring Party shall not use this Agreement as a method for obtaining additional concessions or reduced prices for purchase of similar products or services outside of the Master Agreement. Master Agreements may be structured with not-to-exceed pricing, in which cases the Supplier may offer the Procuring Party and the Procuring Party may accept lower pricing or additional concessions for purchase of Products through a Master Agreement.

9. The Procuring Party shall be responsible for the ordering of Products under this Agreement. A non-procuring party shall not be liable in any fashion for any violation by a

Procuring Party, and, to the extent permitted by applicable law, the Procuring Party shall hold non-procuring party harmless from any liability that may arise from the acts or omissions of the Procuring Party.

10. WITHOUT LIMITING THE GENERALITY OF THE FOREGOING, THE OMNIA PARTNERS PARTIES EXPRESSLY DISCLAIM ALL EXPRESS OR IMPLIED REPRESENTATIONS AND WARRANTIES REGARDING ANY PRODUCT, MASTER AGREEMENT AND GPO CONTRACT. THE OMNIA PARTNERS PARTIES SHALL NOT BE LIABLE IN ANY WAY FOR ANY SPECIAL, INCIDENTAL, INDIRECT, CONSEQUENTIAL, EXEMPLARY, PUNITIVE, OR RELIANCE DAMAGES, EVEN IF THE OMNIA PARTNERS PARTIES ARE ADVISED OF THE POSSIBILITY OF SUCH DAMAGES. FURTHER, THE PROCURING PARTY ACKNOWLEDGES AND AGREES THAT THE OMNIA PARTNERS PARTIES SHALL HAVE NO LIABILITY FOR ANY ACT OR OMISSION BY A SUPPLIER OR OTHER PARTY UNDER A MASTER AGREEMENT OR GPO CONTRACT.

11. This Agreement shall remain in effect until termination by either party giving thirty (30) days' written notice to the other party. The provisions of Paragraphs 6 - 10 hereof shall survive any such termination.

12. This Agreement shall take effect upon (i) execution of the Principal Procurement Agency Certificate, or (ii) registration on the OMNIA Partners website or the execution of this Agreement by a Participating Public Agency, as applicable.

Participating Public Agency:	**OMNIA Partners, as the cooperative administrator on behalf of Principal Procurement Agencies:** **NATIONAL INTERGOVERNMENTAL PURCHASING ALLIANCE COMPANY COMMUNITIES PROGRAM MANAGEMENT, LLC**
Authorized Signature	Signature Sarah E. Vavra
Name	Name Sr. Vice President, Public Sector Contracting
Title and Agency Name	Title
Date	Date

EXHIBIT C
PRINCIPAL PROCUREMENT AGENCY CERTIFICATE, EXAMPLE

PRINCIPAL PROCUREMENT AGENCY CERTIFICATE

In its capacity as a Principal Procurement Agency (as defined below) for National Intergovernmental Purchasing Alliance Company, a Delaware corporation d/b/a OMNIA Partners, Public Sector ("**OMNIA Partners**"), [NAME OF PPA] agrees to pursue Master Agreements for Products as specified in the attached Exhibits to this Principal Procurement Agency Certificate.

I hereby acknowledge, in my capacity as _____ of and on behalf of [NAME OF PPA] ("**Principal Procurement Agency**"), that I have read and hereby agree to the general terms and conditions set forth in the attached Master Intergovernmental Cooperative Purchasing Agreement regulating the use of the Master Agreements and purchase of Products that from time to time are made available by Principal Procurement Agencies to Participating Public Agencies nationwide through OMNIA Partners.

I understand that the purchase of one or more Products under the provisions of the Master Intergovernmental Cooperative Purchasing Agreement is at the sole and complete discretion of the Participating Public Agency.

Authorized Signature, [PRINCIPAL PROCUREMENT AGENCY]

_____
Signature

_____
Name

_____
Title

_____
Date

EXHIBIT D

ADVERTISING COMPLIANCE REQUIREMENT

Pursuant to certain state notice provisions, including but not limited to Oregon Revised Statutes Chapter 279A.220, the following public agencies and political subdivisions of the referenced public agencies are eligible to register with OMNIA Partners and access the Master Agreement contract award made pursuant to this solicitation, and are hereby given notice of the foregoing invitation to bid for purposes of complying with the procedural requirements of said statutes:

State of Alabama	State of Hawaii	Commonwealth of Massachusetts	State of New Mexico	State of South Dakota
State of Alaska	State of Idaho	State of Michigan	State of New York	State of Tennessee
State of Arizona	State of Illinois	State of Minnesota	State of North Carolina	State of Texas
State of Arkansas	State of Indiana	State of Mississippi	State of North Dakota	State of Utah
State of California	State of Iowa	State of Missouri	State of Ohio	State of Vermont
State of Colorado	State of Kansas	State of Montana	State of Oklahoma	Commonwealth of Virginia
State of Connecticut	Commonwealth of Kentucky	State of Nebraska	State of Oregon	State of Washington
State of Delaware	State of Louisiana	State of Nevada	Commonwealth of Pennsylvania	State of West Virginia
State of Florida	State of Maine	State of New Hampshire	State of Rhode Island	State of Wisconsin
State of Georgia	State of Maryland	State of New Jersey	State of South Carolina	State of Wyoming
District of Columbia				

Lists of political subdivisions and local governments in the above referenced states / districts may be found at http://www.usa.gov/Agencies/State_and_Territories.shtml and https://www.usa.gov/local-governments.

JOC Award Agreementg Mountain West

Final Audit Report 2023-02-06

Created:	2023-02-06
By:	Andre Nunez (nunezandre@unm.edu)
Status:	Signed
Transaction ID:	CBJCHBCAABAATGtW5itzDcomwPYcma8Yd33q6jA-mT1D

"JOC Award Agreementg Mountain West" History

Document created by Andre Nunez (nunezandre@unm.edu)
2023-02-06 - 9:04:15 PM GMT- IP address: 64.106.111.102

Document emailed to JOHN MONDRAGON (john@mwgs.us) for signature
2023-02-06 - 9:06:40 PM GMT

Email viewed by JOHN MONDRAGON (john@mwgs.us)
2023-02-06 - 9:14:06 PM GMT- IP address: 104.28.123.135

Document e-signed by JOHN MONDRAGON (john@mwgs.us)
Signature Date: 2023-02-06 - 9:16:50 PM GMT - Time Source: server- IP address: 12.234.239.186

Document emailed to Bruce Cherrin (cherrin@unm.edu) for signature
2023-02-06 - 9:16:51 PM GMT

Email viewed by Bruce Cherrin (cherrin@unm.edu)
2023-02-06 - 9:27:12 PM GMT- IP address: 129.24.217.190

Document e-signed by Bruce Cherrin (cherrin@unm.edu)
Signature Date: 2023-02-06 - 9:27:20 PM GMT - Time Source: server- IP address: 129.24.217.190

Agreement completed.
2023-02-06 - 9:27:20 PM GMT

ACORD

CERTIFICATE OF LIABILITY INSURANCE

DATE (MM/DD/YYYY)
10/29/2024

THIS CERTIFICATE IS ISSUED AS A MATTER OF INFORMATION ONLY AND CONFERS NO RIGHTS UPON THE CERTIFICATE HOLDER. THIS CERTIFICATE DOES NOT AFFIRMATIVELY OR NEGATIVELY AMEND, EXTEND OR ALTER THE COVERAGE AFFORDED BY THE POLICIES BELOW. THIS CERTIFICATE OF INSURANCE DOES NOT CONSTITUTE A CONTRACT BETWEEN THE ISSUING INSURER(S), AUTHORIZED REPRESENTATIVE OR PRODUCER, AND THE CERTIFICATE HOLDER.

IMPORTANT: If the certificate holder is an ADDITIONAL INSURED, the policy(ies) must have ADDITIONAL INSURED provisions or be endorsed. If SUBROGATION IS WAIVED, subject to the terms and conditions of the policy, certain policies may require an endorsement. A statement on this certificate does not confer rights to the certificate holder in lieu of such endorsement(s).

PRODUCER License # 0757776
HUB International Insurance Services (SOW)
6565 Americas Parkway Suite 720
Albuquerque, NM 87110

CONTACT NAME: Ariella Joswick
PHONE (A/C, No, Ext):
FAX (A/C, No):
E-MAIL ADDRESS: ariella.joswick@hubinternational.com

INSURER(S) AFFORDING COVERAGE	NAIC #
INSURER A : ACUITY, A Mutual Insurance Company	14184
INSURER B : New Mexico Premier Insurance Company	13675
INSURER C : The Continental Insurance Company	35289
INSURER D :	
INSURER E :	
INSURER F :	

INSURED
Mountain West Golfscapes, Inc.
P O Box 1630
Peralta, NM 87042

COVERAGES **CERTIFICATE NUMBER:** **REVISION NUMBER:**

THIS IS TO CERTIFY THAT THE POLICIES OF INSURANCE LISTED BELOW HAVE BEEN ISSUED TO THE INSURED NAMED ABOVE FOR THE POLICY PERIOD INDICATED. NOTWITHSTANDING ANY REQUIREMENT, TERM OR CONDITION OF ANY CONTRACT OR OTHER DOCUMENT WITH RESPECT TO WHICH THIS CERTIFICATE MAY BE ISSUED OR MAY PERTAIN, THE INSURANCE AFFORDED BY THE POLICIES DESCRIBED HEREIN IS SUBJECT TO ALL THE TERMS, EXCLUSIONS AND CONDITIONS OF SUCH POLICIES. LIMITS SHOWN MAY HAVE BEEN REDUCED BY PAID CLAIMS.

INSR LTR	TYPE OF INSURANCE	ADDL INSD	SUBR WVD	POLICY NUMBER	POLICY EFF (MM/DD/YYYY)	POLICY EXP (MM/DD/YYYY)	LIMITS	
A	X COMMERCIAL GENERAL LIABILITY						EACH OCCURRENCE	$ 1,000,000
	CLAIMS-MADE X OCCUR			ZV6342	5/15/2024	5/15/2025	DAMAGE TO RENTED PREMISES (Ea occurrence)	$ 100,000
							MED EXP (Any one person)	$ 15,000
							PERSONAL & ADV INJURY	$ 1,000,000
	GEN'L AGGREGATE LIMIT APPLIES PER:						GENERAL AGGREGATE	$ 2,000,000
	POLICY X PRO-JECT LOC						PRODUCTS - COMP/OP AGG	$ 2,000,000
	OTHER:							$
A	AUTOMOBILE LIABILITY						COMBINED SINGLE LIMIT (Ea accident)	$ 1,000,000
	X ANY AUTO			ZV6342	5/15/2024	5/15/2025	BODILY INJURY (Per person)	$
	OWNED AUTOS ONLY / SCHEDULED AUTOS						BODILY INJURY (Per accident)	$
	HIRED AUTOS ONLY / NON-OWNED AUTOS ONLY						PROPERTY DAMAGE (Per accident)	$
								$
A	UMBRELLA LIAB X OCCUR						EACH OCCURRENCE	$ 2,000,000
	X EXCESS LIAB CLAIMS-MADE			ZV6342	5/15/2024	5/15/2025	AGGREGATE	$ 2,000,000
	DED RETENTION $							$
B	WORKERS COMPENSATION AND EMPLOYERS' LIABILITY						X PER STATUTE OTH-ER	
	ANY PROPRIETOR/PARTNER/EXECUTIVE OFFICER/MEMBER EXCLUDED? Y / N (Mandatory in NH)	N / A		31480.121	5/15/2024	5/15/2025	E.L. EACH ACCIDENT	$ 500,000
	If yes, describe under DESCRIPTION OF OPERATIONS below						E.L. DISEASE - EA EMPLOYEE	$ 500,000
							E.L. DISEASE - POLICY LIMIT	$ 500,000
C	Commercial Inland Ma			5091555147	5/15/2023	5/15/2024	2,500/ded	661,000

DESCRIPTION OF OPERATIONS / LOCATIONS / VEHICLES (ACORD 101, Additional Remarks Schedule, may be attached if more space is required)

CERTIFICATE HOLDER

City of Santa Fe
200 Lincoln Ave
Santa Fe, NM 87501

CANCELLATION

SHOULD ANY OF THE ABOVE DESCRIBED POLICIES BE CANCELLED BEFORE THE EXPIRATION DATE THEREOF, NOTICE WILL BE DELIVERED IN ACCORDANCE WITH THE POLICY PROVISIONS.

AUTHORIZED REPRESENTATIVE



ACORD 25 (2016/03) © 1988-2015 ACORD CORPORATION. All rights reserved.
The ACORD name and logo are registered marks of ACORD

CITY OF SANTA FE
FINANCE

More Procurement, less drama ~ John Blair

From: ULIBARRI , SAMUEL S. <ssulibarri@santafenm.gov>
Sent: Thursday, October 31, 2024 10:02 AM
To: Purchasing DET <purchasing_det@santafenm.gov>
Subject: Request for Determination - Golf Course Pond Re-lining

Good morning,
I am requesting a determination for the following scope of work:

Excavate and haul away soil/sludge from pond interior, remove trees/shrubs/stumps from pond interior, install 60mil liner with venting, construct riprap shelving to secure liner around pond, cleanup of jobsite, and demobilization.

Thank you.

Samuel S. Ulibarri
City of Santa Fe
Parks Division
Water Resources Superintendent
(505)231-9219

WS2 NM19561
JS-6 378022

CITY OF SANTA FE
PARKS & OPEN SPACE

ULIBARRI , SAMUEL S.

From: DUTTON-LEYDA, TRAVIS K.
Sent: Thursday, October 31, 2024 10:26 AM
To: ULIBARRI , SAMUEL S.
Cc: Purchasing DET
Subject: RE: Request for Determination - Golf Course Pond Re-lining

Greetings,

The scope of work as written would be Construction. This determination relates only to that question and is no comment on whether the scope of work or procurement method meet all legal standards. I reserve the right to change this determination if the scope of work differs from the scope of work submitted for the original determination. This procurement must be conducted using the processes and procedures set forth by the City of Santa Fe, Central Purchasing, the Procurement Manual, and state statutes.

Please note:

- Save this email as a PDF and upload it into the corresponding Munis records.
- Check with WorkQuest dba Horizons of New Mexico (vendor # 8673) (mloehman@horizonsofnewmexico.org) if this service appears on their approved list.
- If your request includes anything that needs to be reviewed and preapproved by another City Department/Division, please send the same SOW to the corresponding email address and include their response in your packet/Munis.

  -IT components (anything IT) - ereview@santafenm.gov

  -Vehicles – dmjaramillo@santafenm.gov

  -Grants - mtbonifer@santafenm.gov; cmthompson@santafenm.gov; evlujan@santafenm.gov

  - Construction, Facilities, Furniture, Fixtures, Equipment, etc. - jsburnett@santafenm.gov

  -Emergency Related Purchases - bgwilliams@santafenm.gov

  -Asset over $5k - lmstorey@santafenm.gov

- Ensure that the appropriate templates and forms are used https://intranet.santafenm.gov/finance_1 and documented procedures/laws/rules are followed.
- > $20k per year, when processing this procurement, please ensure the procurement number issued by Munis and the procurement name are used in the appropriate documents and the subject of emails.
- If you are processing a procurement where the forecasted amount is =/> $60k, per NMSA 1978, Section 13-1-102, the procurement method must be ITB (if you choose not to use a cooperative or an existing contract). If you feel you need to process an RFP, you must get an Authorization and Plan approved before you process.
- < $20k per year, one quote is acceptable.
- From $20k to $60k per year, if you aren't using a cooperative or existing contract, you'll need to provide 3 quotes in your req. Must use the Munis Bid Module after 12/21/2023.

- Please keep this as part of the procurement file for future reference.
- Figure out your funding source and **inform Purchasing**. To ensure that the proper documents and language are used, it is important to identify the funding source for the subsequent contract. For instance, if federal funds are involved, the procurement request and subsequent contract must include the necessary federal language. Therefore, it is crucial to determine the funding source beforehand.
- Please review the pages linked below to determine whether any of the existing contracts/price agreements or cooperative agreements are applicable to this request. You might be able to use an existing price agreement to save time and money.
    - https://www.generalservices.state.nm.us/state-purchasing/statewide-price-agreements/ (if you choose to use a Statewide, you do not need to ask Horizons if they can do the work. State Purchasing must offer the SOW to Horizons prior to placing the award on their website.)
    - https://naspovaluepoint.org/categories/
    - https://www.omniapartners.com/publicsector/contracts
    - https://www.buyboard.com/home.aspx
    - https://www.h-gac.com/Home
    - https://www.gsaelibrary.gsa.gov/
    - https://www.sourcewell-mn.gov/contract-search

- Submit or send your request to the appropriate MS Teams channel or email address:
    - RFPs requests to https://teams.microsoft.com/l/channel/19%3ad63b9c8b586d424fa5eed34177146ac5%40thread.tacv2/RFP%2520Requests?groupId=a367d8c2-992f-4c74-8e7d-0ccb6950c9a1&tenantId=77b69f5a-55ed-4363-8616-4867b0bc707f
    - ITBs requests to https://teams.microsoft.com/l/channel/19%3a48e1e4588c0440a09cfbd9b907ed42d4%40thread.tacv2/ITB%2520Requests?groupId=a367d8c2-992f-4c74-8e7d-0ccb6950c9a1&tenantId=77b69f5a-55ed-4363-8616-4867b0bc707f
    - Determination requests to purchasing_det@santafenm.gov
    - And all other requests to purchasing@santafenm.gov

Thank you for submitting this scope of work for my review.

Regards,

Travis Dutton-Leyda
Chief Procurement Officer
City of Santa Fe
200 Lincoln Avenue
Santa Fe, NM 87501
505-629-8351
tkduttonleyda@santafenm.gov

https://santafenm.gov/finance-2/purchasing-1

Vendor Registration and Current Procurement Opportunities:
https://cityofsantafenmvendors.munisselfservice.com/Vendors/VBids/SearchResults.aspx

Internal Link: https://intranet.santafenm.gov/finance_1

CITY OF SANTA FE
FINANCE

More Procurement, less drama ~ John Blair

From: ULIBARRI , SAMUEL S. <ssulibarri@santafenm.gov>
Sent: Thursday, October 31, 2024 10:02 AM
To: Purchasing DET <purchasing_det@santafenm.gov>
Subject: Request for Determination - Golf Course Pond Re-lining

Good morning,
I am requesting a determination for the following scope of work:

Excavate and haul away soil/sludge from pond interior, remove trees/shrubs/stumps from pond interior, install 60mil liner with venting, construct riprap shelving to secure liner around pond, cleanup of jobsite, and demobilization.

Thank you.

Samuel S. Ulibarri
City of Santa Fe
Parks Division
Water Resources Superintendent
(505)231-9219

WS2 NM19561
JS-6 378022

CITY OF SANTA FE
PARKS & OPEN SPACE

ULIBARRI , SAMUEL S.

From: Joseph Perez <jperez@horizonsofnewmexico.org>
Sent: Thursday, October 31, 2024 1:24 PM
To: ULIBARRI , SAMUEL S.
Subject: Re: Opportunity for Project - Golf Course Pond Project
Attachments: image001.png

CAUTION: This email originated from outside of the organization. Do not click links or open attachments unless you recognize the sender and know the content is safe.

We will respectfully decline this opportunity

Kind regards

On Thu, Oct 31, 2024, 12:59 PM ULIBARRI , SAMUEL S. <ssulibarri@santafenm.gov> wrote:

> Good afternoon,
>
> Please find below, the scope of work for a project opportunity:
>
> *Excavate and haul away soil/sludge from pond interior, remove trees/shrubs/stumps from pond interior, install 60mil liner with venting, construct riprap shelving to secure liner around pond, cleanup of jobsite, and demobilization.*
>
> Thank you.
>
> **Samuel S. Ulibarri**
>
> **City of Santa Fe**
>
> **Parks Division**
>
> **Water Resources Superintendent**
>
> **(505)231-9219**
>
> **WS2 NM19561**
>
> **JS-6 378022**

City of Santa Fe, New Mexico
Memorandum

DATE: **January 13, 2025**

TO: **Governing Body**

VIA: **Regina Wheeler, Public Works Director** Regina Wheeler (Jan 14, 2025 09:09 MST)

Melissa McDonald, Parks and Open Space Division Director MMc (Jan 14, 2025 08:26 MST)

Jesse Roach, Interim Public Utilities Director

FROM: **Zoë Isaacson, River and Watershed Manager** Zoe Isaacson

---

ACTION:
Request for the Approval of a Budget Amendment Resolution (BAR) to Transfer Customer River Fund Donations and a Water Fund Match in the Total Amount of $293,594 to Santa Fe River Fund WIP Construction in Public Works Per Ordinance No. 2013-9 the Voluntary River Conservation Fund (Zoë Isaacson, River and Watershed Manager zrisaacson@santafenm.gov)

SUMMARY:
The Voluntary River Conservation Fund (Ordinance 2013-9) enables residents to contribute to the enhancement of the Santa Fe River ecosystem by supporting initiatives that improve water flow and riparian habitats. Donations, made through the City's utility payments, are matched dollar-for-dollar by the City annually. Public Works is seeking approval for a Budget Amendment Resolution (BAR) to transfer these funds, to the River and Watershed Section for the implementation of eligible projects.

These projects may include, most typically, the construction of rain gardens along East and West Alameda to reduce pollutants in urban runoff and improve water quality in the Santa Fe River. Rain gardens also help mitigate the urban heat island effect, promote water infiltration, and provide valuable habitat. Other projects may include the installation of pollution control measures at existing stormwater facilities, riparian habitat restoration, and Santa Fe River stabilization.

All projects require the endorsement of the Santa Fe River Commission and approval by the Governing Body.

FUNDING SOURCE: Voluntary River Conservation Fund
Project Ledger ID Number: PWD2523149
Fund Name/Number: Santa Fe River Fund/231
Munis Org Name/Number: Santa Fe River Fund/2310078
Munis Expenditure Object Name/Number: WIP Construction (Improvements/SF River Fund)/572970

ATTACHMENTS:
Ordinance 2013-9 (Amended)
BAR
Tyler Munis GL Detail

Log # *{Finance use only}*:	
Journal # *{Finance use only}*:	

City of Santa Fe, New Mexico
BUDGET AMENDMENT RESOLUTION (BAR)

DEPARTMENT / DIVISION NAME	DATE
Public Works / Stormwater	11/8/2024

ITEM DESCRIPTION	ORG	OBJECT	PROJECT	INCREASE	DECREASE
EXPENDITURES				*{enter as positive #}*	*{enter as negative #}*
WIP Construction - Improvements/SF River Fund	2310078	572970	PWD2523149	293,534	
Operating Transfer to Stormwater/SF River Fund	5050382	750231		293,534	
REVENUES				*{enter as negative #}*	*{enter as positive #}*
Operating Transfer to Stormwater/SF River Fund	2310078	650505		(293,534)	
				$ 293,534	$ -

JUSTIFICATION: *(use additional page if needed)*
--Attach supporting documentation/memo

Transfer of Santa Fe River Donations collected from Utility bill payments from funds held in escrow in Water Fund from FY 2020-2024, for SF River improvements per Ordinance 2013-9, which includes a dollar for dollar match from the the Water Fund.

in a net change to ANY Fund}

Fund(s) Affected	Fund Balance Increase/(Decrease)
505	(293,534)
231	293,534
TOTAL:	0

Halona Crowe 11/13/2024
Prepared By *{print name}* Date

Public Utilties Director Signature Date

Regina Wheeler
Regina Wheeler (Jan 14, 2025 09:09 MST)
Public Works Department Director Signature Date

{Use this form for Finance Committee/ City Council agenda items ONLY}

CITY COUNCIL APPROVAL

City Council Approval Date

Agenda Item #:

Andy Hopkins Jan 16, 2025
Budget Officer Date

Finance Director *{≤ $5,000}* Date

City Manager *{≤ $60,000}* Date

ORG	OBJECT	DESCRIPTION	EFF DATE	PO/REF2	REFERENCE	AMOUNT	COMMENTS
505	214055	Donations- Santa Fe River	06/27/2024	40002605	cy 4 bill	-165.00	02304040
505	214055	Donations- Santa Fe River	06/20/2024	40002603	cy 3 bill	-177.00	02303751
505	214055	Donations- Santa Fe River	06/13/2024	40002600	cy 2 bill	-89.00	02303150
505	214055	Donations- Santa Fe River	06/06/2024	40002597	cy 1 bill	-161.00	02302616
505	214055	Donations- Santa Fe River	05/23/2024	40002588	cy 4 bill	-165.00	02301661
505	214055	Donations- Santa Fe River	05/16/2024	40002579	cy 3 bill	-177.00	02300840
505	214055	Donations- Santa Fe River	05/29/2024	40002500	cy 2 bill	-89.00	02299848
505	214055	Donations- Santa Fe River	05/02/2024	40002496	cy 1 bill	-161.00	02298856
505	214055	Donations- Santa Fe River	05/02/2024	40002495	cy 1 final	-10.00	02298844
505	214055	Donations- Santa Fe River	04/25/2024	40002493	cy 4 bill	-165.00	02298162
505	214055	Donations- Santa Fe River	04/18/2024	40002489	cy 3 bill	-177.00	02297460
505	214055	Donations- Santa Fe River	04/11/2024	40002484	cy 2 bill	-89.00	02296660
505	214055	Donations- Santa Fe River	04/04/2024	40002481	cy 1 bill	-171.00	02295927
505	214055	Donations- Santa Fe River	03/28/2024	40002479	cy 4 bill	-165.00	02295051
505	214055	Donations- Santa Fe River	03/21/2024	40002475	cy 3 bill	-177.00	02294215
505	214055	Donations- Santa Fe River	03/14/2024	40002472	cy 2 bill	-89.00	02293685
505	214055	Donations- Santa Fe River	03/07/2024	40002468	cy 1 bill	-171.00	02293351
505	214055	Donations- Santa Fe River	02/22/2024	40002464	cy 4 bill	-165.00	02292524
505	214055	Donations- Santa Fe River	02/15/2024	40002461	cy 3 bill	-177.00	02292108
505	214055	Donations- Santa Fe River	02/08/2024	40002459	cy 2 bill	-89.00	02291720
505	214055	Donations- Santa Fe River	02/01/2024	40002457	cy 1 bill	-171.00	02291265
505	214055	Donations- Santa Fe River	01/25/2024	40002455	cy 4 bill	-165.00	02290745
505	214055	Donations- Santa Fe River	01/18/2024	40002452	cy 3 bill	-177.00	02290182
505	214055	Donations- Santa Fe River	01/11/2024	40002450	cy 2 bill	-89.00	02289652
505	214055	Donations- Santa Fe River	01/04/2024	40002441	cy 1 bill	-171.00	02288706
505	214055	Donations- Santa Fe River	12/28/2023	40002438	cy 4 bill	-175.00	02288280
505	214055	Donations- Santa Fe River	12/21/2023	40002436	cy 3 bill	-177.00	02287944
505	214055	Donations- Santa Fe River	12/14/2023	40002434	cy 2 bill	-89.00	02287383
505	214055	Donations- Santa Fe River	12/07/2023	40002400	cy 1 bill	-171.00	02286797
505	214055	Donations- Santa Fe River	11/23/2023	40002397	cy 4 bill	-175.00	02285407
505	214055	Donations- Santa Fe River	11/16/2023	40002386	cy 3 bill	-177.00	02285075
505	214055	Donations- Santa Fe River	11/09/2023	40002383	cy 2 bill	-89.00	02283846
505	214055	Donations- Santa Fe River	11/02/2023	40002381	cy 1 bill	-171.00	02283090
505	214055	Donations- Santa Fe River	10/26/2023	40002366	cy 4 bill	-175.00	02282316
505	214055	Donations- Santa Fe River	10/19/2023	40002364	cy 3 bill	-177.00	02281449
505	214055	Donations- Santa Fe River	10/12/2023	40002352	cy 2 bill	-89.00	02280446
505	214055	Donations- Santa Fe River	10/05/2023	40002350	cy 1 bill	-171.00	02279803
505	214055	Donations- Santa Fe River	09/28/2023	40002346	cy 4 bill	-175.00	02279168
505	214055	Donations- Santa Fe River	09/21/2023	40002344	cy 3 bill	-177.00	02278582
505	214055	Donations- Santa Fe River	09/14/2023	40002339	cy 2 bill	-94.00	02277612
505	214055	Donations- Santa Fe River	09/07/2023	40002336	cy 1 bill	-171.00	02276694
505	214055	Donations- Santa Fe River	08/24/2023	40002331	cy 4 bill	-175.00	02275159
505	214055	Donations- Santa Fe River	08/17/2023	40002329	cy 3 bill	-177.00	02273240
505	214055	Donations- Santa Fe River	08/03/2023	40002325	cy 2 bill	-94.00	02272191
505	214055	Donations- Santa Fe River	08/03/2023	40002317	cy 1 bill	-171.00	02270951
505	214055	Donations- Santa Fe River	07/27/2023	40002311	cy 4 bill	-175.00	02270306
505	214055	Donations- Santa Fe River	07/20/2023	40002307	cy 3 bill	-177.00	02269495
505	214055	Donations- Santa Fe River	07/13/2023	40002303	cy 2 bill	-94.00	02268334
505	214055	Donations- Santa Fe River	07/06/2023	40002290	cy 1 bill	-171.00	02267040
505	214055	Donations- Santa Fe River	06/22/2023	40002284	cy 4 bill	-185.00	02265127
505	214055	Donations- Santa Fe River	06/15/2023	40002282	cy 3 bill	-177.00	02264424
505	214055	Donations- Santa Fe River	06/08/2023	40002277	cy 2 bill	-94.00	02263654

ORG	OBJECT	DESCRIPTION	EFF DATE	PO/REF2	REFERENCE	AMOUNT	COMMENTS
505	214055	Donations- Santa Fe River	06/01/2023	40002271	cy 1 bill	-171.00	02263034
505	214055	Donations- Santa Fe River	05/25/2023	40002267	cy 4 bill	-185.00	02262519
505	214055	Donations- Santa Fe River	05/18/2023	40002261	cy 3 bill	-177.00	02261981
505	214055	Donations- Santa Fe River	05/11/2023	40002257	cy 2 bill	-94.00	02261300
505	214055	Donations- Santa Fe River	05/04/2023	40002254	cy 1 bill	-171.00	02260485
505	214055	Donations- Santa Fe River	04/27/2023	40002251	cy 4 bill	-185.00	02259894
505	214055	Donations- Santa Fe River	04/20/2023	40002247	cy 3 bill	-177.00	02259465
505	214055	Donations- Santa Fe River	04/13/2023	40002244	cy 2 bill	-94.00	02258734
505	214055	Donations- Santa Fe River	04/06/2023	40002241	cy 1 bill	-172.00	02258061
505	214055	Donations- Santa Fe River	03/30/2023	40002239	cy 4 bill	-185.00	02257304
505	214055	Donations- Santa Fe River	03/23/2023	40002237	cy 3 bill	-177.00	02256469
505	214055	Donations- Santa Fe River	03/16/2023	40002232	cy 2 bill	-94.00	02255683
505	214055	Donations- Santa Fe River	03/09/2023	40002229	cy 1 bill	-172.00	02255001
505	214055	Donations- Santa Fe River	02/23/2023	40002221	cy 4 bill	-185.00	02253553
505	214055	Donations- Santa Fe River	02/16/2023	40002219	cy 3 bill	-177.00	02252950
505	214055	Donations- Santa Fe River	02/09/2023	40002215	cy 2 bill	-94.00	02252317
505	214055	Donations- Santa Fe River	02/02/2023	40002212	cy 1 bill	-172.00	02251375
505	214055	Donations- Santa Fe River	01/26/2023	40002199	cy 4 bill	-185.00	02250655
505	214055	Donations- Santa Fe River	01/26/2023	40002198	cy 4 final	50.00	02250650
505	214055	Donations- Santa Fe River	01/19/2023	40002195	cy 3 bill	-177.00	02249791
505	214055	Donations- Santa Fe River	01/12/2023	40002193	cy 2 bill	-94.00	02249094
505	214055	Donations- Santa Fe River	01/05/2023	40002189	cy 1 bill	-172.00	02248351
505	214055	Donations- Santa Fe River	12/22/2022	40002184	cy 4 bill	-195.00	02247527
505	214055	Donations- Santa Fe River	12/15/2022	40002182	cy 3 bill	-177.00	02247055
505	214055	Donations- Santa Fe River	12/08/2022	40002178	cy 2 bill	-94.00	02246437
505	214055	Donations- Santa Fe River	12/01/2022	40002173	cy 1 bill	-172.00	02245790
505	214055	Donations- Santa Fe River	11/24/2022	40002171	cy 4 bill	-195.00	02245178
505	214055	Donations- Santa Fe River	11/17/2022	40002167	cy 3 bill	-177.00	02244864
505	214055	Donations- Santa Fe River	11/10/2022	40002164	cy 2 bill	-94.00	02244439
505	214055	Donations- Santa Fe River	10/27/2022	40002159	cy 4 bill	-195.00	02243431
505	214055	Donations- Santa Fe River	10/13/2022	40002157	cy 2 bill	-94.00	02243323
505	214055	Donations- Santa Fe River	10/20/2022	40002154	cy 3 bill	-177.00	02242972
505	214055	Donations- Santa Fe River	10/06/2022	40002150	cy 1 bill	-344.00	02242016
505	214055	Donations- Santa Fe River	09/29/2022	40002148	cy 4 bill	-195.00	02241402
505	214055	Donations- Santa Fe River	09/22/2022	40002145	cy 3 bill	-177.00	02240910
505	214055	Donations- Santa Fe River	09/15/2022	40002142	cy 2 bill	-94.00	02240379
505	214055	Donations- Santa Fe River	09/01/2022	40002138	cy 1 bill	-172.00	02239155
505	214055	Donations- Santa Fe River	08/25/2022	40002136	cy 4 bill	-195.00	02238681
505	214055	Donations- Santa Fe River	08/18/2022	40002133	cy 3 bill	-177.00	02238341
505	214055	Donations- Santa Fe River	08/11/2022	40002131	cy 2 bill	-104.00	02237700
505	214055	Donations- Santa Fe River	08/04/2022	40002128	cy 1 bill	-182.00	02237042
505	214055	Donations- Santa Fe River	07/07/2022	40002115	cy 1 bill	-182.00	02235042
505	214055	Donations- Santa Fe River	07/28/2022	40002125	cy 4 bill	-195.00	02236562
505	214055	Donations- Santa Fe River	07/21/2022	40002122	cy 3 bill	-177.00	02236063
505	214055	Donations- Santa Fe River	07/14/2022	40002118	cy 2 final	-10.00	02235484
505	214055	Donations- Santa Fe River	07/14/2022	40002119	cy 2 bill	-94.00	02235501
505	214055	Donations- Santa Fe River	06/23/2022	40002112	cy 4 bill	-195.00	02233995
505	214055	Donations- Santa Fe River	06/16/2022	40002107	cy 3 bill	-177.00	02233563
505	214055	Donations- Santa Fe River	06/09/2022	40002103	cy 2 bill	-104.00	02232857
505	214055	Donations- Santa Fe River	06/22/2022	40002098	cy 1 bill	-182.00	02232298
505	214055	Donations- Santa Fe River	05/26/2022	40002093	cy 4 bill	-195.00	02231958
505	214055	Donations- Santa Fe River	05/19/2022	40002090	cy 3 bill	-177.00	02231412

ORG	OBJECT	DESCRIPTION	EFF DATE	PO/REF2	REFERENCE	AMOUNT	COMMENTS
505	214055	Donations- Santa Fe River	05/12/2022	40002087	cy 2 Bill	-104.00	02230876
505	214055	Donations- Santa Fe River	05/05/2022	40002082	cy 1 bill	-182.00	02230497
505	214055	Donations- Santa Fe River	04/28/2022	40002079	cy 4 bill	-200.00	02230021
505	214055	Donations- Santa Fe River	04/21/2022	40002074	cy 3 bill	-177.00	02229489
505	214055	Donations- Santa Fe River	04/14/2022	40002068	cy 2 bill	-104.00	02228714
505	214055	Donations- Santa Fe River	04/07/2022	40002064	cy 1 bill	-182.00	02228214
505	214055	Donations- Santa Fe River	03/31/2022	40002058	cy 4 bill	-200.00	02227551
505	214055	Donations- Santa Fe River	03/24/2022	40002054	cy 3 bill	-177.00	02226854
505	214055	Donations- Santa Fe River	03/17/2022	40002051	cy 2 bill	-104.00	02226213
505	214055	Donations- Santa Fe River	03/10/2022	40002046	cy 1 bill	-182.00	02225535
505	214055	Donations- Santa Fe River	02/24/2022	40002039	cy 4 bill	-200.00	02224396
505	214055	Donations- Santa Fe River	02/17/2022	40002035	cy 3 Bill	-177.00	02223752
505	214055	Donations- Santa Fe River	02/10/2022	40002029	cy 2 Bill	-106.00	02223239
505	214055	Donations- Santa Fe River	02/03/2022	40002025	cy 1 bill	-182.00	02222635
505	214055	Donations- Santa Fe River	01/27/2022	40002019	cy 4 bill	-200.00	02221884
505	214055	Donations- Santa Fe River	01/20/2022	40002014	cy 3 bill	-177.00	02221369
505	214055	Donations- Santa Fe River	01/13/2022	40002009	cy 3 bill	-106.00	02220833
505	214055	Donations- Santa Fe River	01/06/2022	40002004	cy 2 bill	-182.00	02220271
505	214055	Donations- Santa Fe River	12/30/2021	40001998	cy 4 bill	-200.00	02219760
505	214055	Donations- Santa Fe River	12/16/2021	40001978	cy 2 bill	-106.00	02218861
505	214055	Donations- Santa Fe River	12/15/2021	40001960	cy 2 final	5.00	02218632
505	214055	Donations- Santa Fe River	12/23/2021	40001992	cy 3 bill	-177.00	02219325
505	214055	Donations- Santa Fe River	12/09/2021	40001959	cy 1 bill	-187.00	02218277
505	214055	Donations- Santa Fe River	11/25/2021	40001954	cy 4 Bill	-200.00	02217083
505	214055	Donations- Santa Fe River	11/18/2021	40001950	cy 3 Bill	-177.00	02216728
505	214055	Donations- Santa Fe River	11/11/2021	40001946	cy 2 Bill	-106.00	02216268
505	214055	Donations- Santa Fe River	11/04/2021	40001942	cy 1 bill	-188.00	02215740
505	214055	Donations- Santa Fe River	10/28/2021	40001939	cy 4 bill	-200.00	02215235
505	214055	Donations- Santa Fe River	10/21/2021	40001933	cy 3 bill	-177.00	02214734
505	214055	Donations- Santa Fe River	10/14/2021	40001928	cy 2 bill	-106.00	02214175
505	214055	Donations- Santa Fe River	10/07/2021	40001925	cy 1 bill	-198.00	02213582
505	214055	Donations- Santa Fe River	09/30/2021	40001920	cy 4 bill	-200.00	02212929
505	214055	Donations- Santa Fe River	09/23/2021	40001915	cy 3 bill	-177.00	02212414
505	214055	Donations- Santa Fe River	09/16/2021	40001911	cy 2 bill	-106.00	02211812
505	214055	Donations- Santa Fe River	09/09/2021	40001908	cy 1 bill	-178.00	02211293
505	214055	Donations- Santa Fe River	08/26/2021	40001904	cy 4 bill	-200.00	02210423
505	214055	Donations- Santa Fe River	08/19/2021	40001900	cy 3 bill	-177.00	02210044
505	214055	Donations- Santa Fe River	08/12/2021	40001897	cy 2 bill	-106.00	02209487
505	214055	Donations- Santa Fe River	08/05/2021	40001894	cy 1 bill	-178.00	02209192
505	214055	Donations- Santa Fe River	07/29/2021	40001889	cy 4 bill	-200.00	02208742
505	214055	Donations- Santa Fe River	07/22/2021	40001886	cy 3 bill	-177.00	02208270
505	214055	Donations- Santa Fe River	07/15/2021	40001883	cy 2 bill	-106.00	02207839
505	214055	Donations- Santa Fe River	07/08/2021	40001874	cy 1 bill	-178.00	02207308
505	214055	Donations- Santa Fe River	06/03/2021	40001855	CYCLE 1	-183.00	02204879
505	214055	Donations- Santa Fe River	06/03/2021	40001855	UCISBill	-183.00	02204879
505	214055	Donations- Santa Fe River	06/10/2021	40001861	cy 2 final	5.00	02205380
505	214055	Donations- Santa Fe River	06/24/2021	40001870	cy 4 bill	-200.00	02206465
505	214055	Donations- Santa Fe River	06/17/2021	40001865	cy 3 bill	-177.00	02205871
505	214055	Donations- Santa Fe River	06/10/2021	40001862	cy 2 bill	-101.00	02205389
505	214055	Donations- Santa Fe River	05/27/2021	40001853	cy 4 bill	-200.00	02204506
505	214055	Donations- Santa Fe River	05/20/2021	40001850	cy 3 bill	-177.00	02204079
505	214055	Donations- Santa Fe River	05/13/2021	40001847	cy 2 bill	-101.00	02203549

ORG	OBJECT	DESCRIPTION	EFF DATE	PO/REF2	REFERENCE	AMOUNT	COMMENTS
505	214055	Donations- Santa Fe River	05/06/2021	40001841	cy 1 bill	-183.00	02202993
505	214055	Donations- Santa Fe River	04/29/2021	40001838	cy 4 bill	-200.00	02202511
505	214055	Donations- Santa Fe River	04/22/2021	40001831	cy 3 bill	-177.00	02202113
505	214055	Donations- Santa Fe River	04/15/2021	40001828	cy 2 bill	-101.00	02201651
505	214055	Donations- Santa Fe River	04/08/2021	40001824	cy 1 bill	-183.00	02201039
505	214055	Donations- Santa Fe River	03/30/2021	789142	UTILGL	-200.00	
505	214055	Donations- Santa Fe River	03/25/2021	40001820	cy 4 bill	-200.00	02200168
505	214055	Donations- Santa Fe River	03/04/2021	40001806	cy 1 bill	-183.00	02198797
505	214055	Donations- Santa Fe River	03/18/2021	40001817	cy 3 bill	-177.00	02199695
505	214055	Donations- Santa Fe River	03/11/2021	40001813	cy 2 bill	-101.00	02199311
505	214055	Donations- Santa Fe River	02/04/2021	40001788	cy 1 bill	-183.00	02196534
505	214055	Donations- Santa Fe River	02/25/2021	40001804	cy 4 bill	-200.00	02198245
505	214055	Donations- Santa Fe River	02/18/2021	40001798	cy 3 bill	-177.00	02197857
505	214055	Donations- Santa Fe River	02/11/2021	40001792	cy 2 bill	-101.00	02197298
505	214055	Donations- Santa Fe River	02/19/2021	786051	UTIL GL	-100.00	
505	214055	Donations- Santa Fe River	01/28/2021	40001783	cy 4 bill	-200.00	02196044
505	214055	Donations- Santa Fe River	01/07/2021	40001768	cy 1 bill	-193.00	02194823
505	214055	Donations- Santa Fe River	01/21/2021	40001778	cy 3 bill	-177.00	02195660
505	214055	Donations- Santa Fe River	01/14/2021	40001774	cy 2 bill	-101.00	02195318
505	214055	Donations- Santa Fe River	12/24/2020	40001759	Cycle 3	-177.00	02194024
505	214055	Donations- Santa Fe River	12/17/2020	40001753	Cycle 2	-99.00	02193570
505	214055	Donations- Santa Fe River	12/12/2020	40001748	cy 1 bill	-193.00	02193028
505	214055	Donations- Santa Fe River	12/31/2020	40001764	cy 4 bill	-200.00	02194389
505	214055	Donations- Santa Fe River	11/26/2020	40001743	Cycle 4	-200.00	02192139
505	214055	Donations- Santa Fe River	11/05/2020	40001731	Cycle 1	-193.00	02191054
505	214055	Donations- Santa Fe River	11/19/2020	40001740	cy 3 bill	-177.00	02191879
505	214055	Donations- Santa Fe River	11/12/2020	40001736	cy 2 bill	-99.00	02191431
505	214055	Donations- Santa Fe River	10/08/2020	40001718	CYCLE 1	-203.00	02189449
505	214055	Donations- Santa Fe River	10/29/2020	40001728	Cycle 4	-200.00	02190640
505	214055	Donations- Santa Fe River	10/22/2020	40001724	cy 3 billi	-177.00	02190214
505	214055	Donations- Santa Fe River	10/22/2020	40001723	cy 3 final	-10.00	02190211
505	214055	Donations- Santa Fe River	10/15/2020	40001721	cy 2 bill	-99.00	02189766
505	214055	Donations- Santa Fe River	10/08/2020	40001717	cy 1 final	-10.00	02189441
505	214055	Donations- Santa Fe River	09/24/2020	40001709	Cycle 4	-200.00	02188098
505	214055	Donations- Santa Fe River	09/24/2020	40001708	off cycle	-10.00	02188095
505	214055	Donations- Santa Fe River	09/17/2020	40001697	cy 3 bill	-187.00	02187700
505	214055	Donations- Santa Fe River	09/10/2020	40001693	cy 2 bill	-99.00	02187210
505	214055	Donations- Santa Fe River	09/03/2020	40001691	cy 1 bill	-213.00	02186817
505	214055	Donations- Santa Fe River	08/27/2020	40001688	cy 4 bill	-210.00	02186372
505	214055	Donations- Santa Fe River	08/20/2020	40001684	cy 3 bill	-187.00	02185496
505	214055	Donations- Santa Fe River	08/13/2020	40001681	cy 2 bill	-99.00	02185075
505	214055	Donations- Santa Fe River	08/06/2020	40001673	cy 1 bill	-213.00	02184386
505	214055	Donations- Santa Fe River	07/30/2020	40001666	cy 4 bill	-210.00	02183492
505	214055	Donations- Santa Fe River	07/23/2020	40001661	cy 3 bill	-187.00	02182723
505	214055	Donations- Santa Fe River	07/16/2020	40001658	cy 2 bill	-99.00	02182400
505	214055	Donations- Santa Fe River	07/09/2020	40001654	cy 1 bill	-213.00	02181922
505	214055	Donations- Santa Fe River	06/25/2020	40001650	cy 4 bill	-210.00	02181036
505	214055	Donations- Santa Fe River	06/25/2020	40001649	cy 4 final	-5.00	02181033
505	214055	Donations- Santa Fe River	06/18/2020	40001645	cy 4 bill	-187.00	02180505
505	214055	Donations- Santa Fe River	06/11/2020	40001641	cy 2 bill	-99.00	02179937
505	214055	Donations- Santa Fe River	06/04/2020	40001639	cy 1 Bill	-213.00	02179240
505	214055	Donations- Santa Fe River	05/28/2020	40001625	cy 4 Bill	-215.00	02178152

ORG	OBJECT	DESCRIPTION	EFF DATE	PO/REF2	REFERENCE	AMOUNT	COMMENTS
505	214055	Donations- Santa Fe River	05/21/2020	40001621	cy 3 Bill	-187.00	02177868
505	214055	Donations- Santa Fe River	05/14/2020	40001617	cy 2 Bill	-99.00	02176444
505	214055	Donations- Santa Fe River	05/07/2020	40001614	cy 1 Bill	-213.00	02176113
505	214055	Donations- Santa Fe River	04/30/2020	40001611	cy 4 bill	-215.00	02175294
505	214055	Donations- Santa Fe River	04/23/2020	40001607	cy 3 bill	-177.00	02174874
505	214055	Donations- Santa Fe River	04/16/2020	40001604	cy 2 bill	-99.00	02172724
505	214055	Donations- Santa Fe River	04/09/2020	40001601	cy 1 bill	-203.00	02171627
505	214055	Donations- Santa Fe River	03/26/2020	40001595	cy 4 final	5.00	02170751
505	214055	Donations- Santa Fe River	03/26/2020	40001596	cy 4 bill	-235.00	02170754
505	214055	Donations- Santa Fe River	03/19/2020	40001592	cy 3 bill	-192.00	02170343
505	214055	Donations- Santa Fe River	03/12/2020	40001586	cy 2 bill	-99.00	02169580
505	214055	Donations- Santa Fe River	03/05/2020	40001578	cy 1 bill	-203.00	02168723
505	214055	Donations- Santa Fe River	02/27/2020	40001576	cy 4 bill	-260.00	02167543
505	214055	Donations- Santa Fe River	02/20/2020	40001571	cy 3 billi	-192.00	02167154
505	214055	Donations- Santa Fe River	02/13/2020	40001568	cy 2 bill	-100.00	02166730
505	214055	Donations- Santa Fe River	02/06/2020	40001564	cy 1 bill	-203.00	02166456
505	214055	Donations- Santa Fe River	01/30/2020	40001562	cy 4 bill	-265.00	02165986
505	214055	Donations- Santa Fe River	01/23/2020	40001557	cy 3 bill	-192.00	02165607
505	214055	Donations- Santa Fe River	01/16/2020	40001555	cy 2 bill	-100.00	02165230
505	214055	Donations- Santa Fe River	01/09/2020	40001551	cy 1 bill	-204.00	02164794
505	214055	Donations- Santa Fe River	12/19/2019	40001539	Cy 3 bill	-192.00	02163899
505	214055	Donations- Santa Fe River	12/26/2019	40001541	Cy 4 bill	-265.00	02164143
505	214055	Donations- Santa Fe River	12/12/2019	40001536	cy 2 bill	-100.00	02163450
505	214055	Donations- Santa Fe River	12/05/2019	40001533	cy 1 bill	-204.00	02163031
505	214055	Donations- Santa Fe River	12/04/2019	734527	UTILGL	-50.00	
505	214055	Donations- Santa Fe River	11/28/2019	40001528	cy 4 bill	-265.00	02162473
505	214055	Donations- Santa Fe River	11/21/2019	40001526	cy 3 bill	-192.00	02162215
505	214055	Donations- Santa Fe River	11/14/2019	40001522	cycle bill	-100.00	02161567
505	214055	Donations- Santa Fe River	11/07/2019	40001519	cycle bill	-214.00	02161140
505	214055	Donations- Santa Fe River	10/10/2019	40001505	cycle bill	-100.00	02159105
505	214055	Donations- Santa Fe River	10/24/2019	40001512	cycle bill	-265.00	02159896
505	214055	Donations- Santa Fe River	10/17/2019	40001509	cycle bill	-192.00	02159447
505	214055	Donations- Santa Fe River	10/03/2019	40001496	cycle bill	-214.00	02158566
505	214055	Donations- Santa Fe River	09/26/2019	40001492	Cy 4 Bill	-265.00	02157832
505	214055	Donations- Santa Fe River	09/19/2019	40001490	Cy 3 Bill	-192.00	02157114
505	214055	Donations- Santa Fe River	09/12/2019	40001487	Cy 2 Bill	-100.00	02156693
505	214055	Donations- Santa Fe River	09/05/2019	40001484	Cy 1 Bill	-214.00	02156259
505	214055	Donations- Santa Fe River	08/29/2019	40001479	Cycle Bill	-265.00	02155858
505	214055	Donations- Santa Fe River	08/22/2019	40001475	Cycle Bill	-192.00	02155008
505	214055	Donations- Santa Fe River	08/15/2019	40001472	Cycle Bill	-110.00	02154661
505	214055	Donations- Santa Fe River	08/08/2019	40001470	Cycle Bill	-214.00	02154335
505	214055	Donations- Santa Fe River	07/25/2019	40001463	Cycle Bill	-265.00	02153602
505	214055	Donations- Santa Fe River	07/11/2019	40001457	Cycle Bill	-110.00	02152903
505	214055	Donations- Santa Fe River	07/18/2019	40001460	Cycle Bill	-192.00	02153263
505	214055	Donations- Santa Fe River	07/04/2019	40001453	Cycle Bill	-215.00	02152556
505	214055	Donations- Santa Fe River	07/01/2019		FY20BEGBAL	-106,255.00	FY20 Begin Bal
						-146,767.00	Total Customer D
						-146,767.00	Water Fund Matc
						-293,534.00	

onationa per GL

City of Santa Fe, New Mexico

200 Lincoln Avenue, P.O. Box 909, Santa Fe, N.M. 87504-0909
www.santafenm.gov

Alan Webber, Mayor

Councilors:
Signe I. Lindell, Mayor Pro Tem, District 1
Alma G. Castro, District 1
Michael J. Garcia, District 2
Carol Romero-Wirth, District 2
Lee Garcia, District 3
Pilar F.H. Faulkner, District 3
Jamie Cassutt, District 4
Amanda Chavez, District 4

DATE: **December 27, 2024**

TO: **Finance Committee, Public Works and Utilities, and Governing Body**

FROM: **James Harris, Airport Manager** JH

VIA: **Kelly Bynon, Administrative Manager** Kelly Bynon

ITEM AND ISSUE:

Request For Approval to Accept the New Mexico Department of Transportation Aviation Division Grant # SAF-25-03 in the Amount of $1,234,923 for the Reconstruction of the Terminal Apron.

1. Request For Approval of a Budget Amendment Resolution (BAR) in the Total Amount of $1,372,167 to Increase WIP Design and WIP Construction using New Mexico Department of Transportation Aviation Division Funding for the Reconstruction of the Terminal Apron.

(James Harris, Airport Manager, jcharris@santafenm.gov; Kelly Bynon, Administrative Manager, kabynon@santafenm.gov)

BACKGROUND AND SUMMARY:

The New Mexico Department of Transportation Aviation Division has awarded Grant # SAF-25-03 in the Amount of $1,234,923 for the Reconstruction of the Terminal Apron. This state grant is a matching grant to FAA grant #3-35-0037-065-2024 that has already been accepted by Governing Body.

ACTION:

Approval to Accept the New Mexico Department of Transportation Aviation Division Grant # SAF-25-03 in the Amount of $1,234,923 for the North Apron Reconstruction Project.

1. Approval of a Budget Amendment Resolution (BAR) in the Total Amount of $1,372,167 to Increase WIP Design and WIP Construction using New Mexico Department of Transportation Aviation Division Funding for the North Apron Reconstruction Project.

COMMITTEE REVIEW:

Public Works & Utilities: 01/06/2025
Finance Committee: 01/13/2025
Governing Body: 01/15/2025

Log # *{Finance use only}*:	
Journal # *{Finance use only}*:	

City of Santa Fe, New Mexico
BUDGET AMENDMENT RESOLUTION (BAR)

DEPARTMENT / DIVISION NAME	DATE
Public Works / Airport	12/13/2024

ITEM DESCRIPTION	ORG	OBJECT	PROJECT	INCREASE	DECREASE
EXPENDITURES				*{enter as positive #}*	*{enter as negative #}*
WIP Design	5450407	572960	AIR2554506	279,739	
WIP Construction	5450407	572970	AIR2554506	1,092,398	
REVENUES				*{enter as negative #}*	*{enter as positive #}*
NMDOT	5450407	490150	AIR2554506	(1,234,923)	
				$ 137,214	$ -

JUSTIFICATION: *(use additional page if needed)*
--Attach supporting documentation/memo

NMDOT Grant SAF-25-03 was awarded to Santa Fe Regional Airport for the Reconstruction of the apron terminal.

This grant is a match grant with USDOT Grant 065. The FAA grant has already been approved and budgeted

under PL AIR2554506 in the amount of $6,089,700 for assistance with the construction phase of this project.

NMDOT grant 25-03 will use $279,739 for Design purposes and the rest for construction at a later time.

$137,214 to come from fund 545 for city portion

{Complete section below if BAR results in a net change to ANY Fund}

Fund(s) Affected	Fund Balance Increase/(Decrease)
545	(137,214)
TOTAL:	**(137,214)**

Kelly Bynon — 12/13/2024
Prepared By *{print name}* — Date

{Use this form for Finance Committee/ City Council agenda items ONLY}

CITY COUNCIL APPROVAL

City Council Approval D:

Agenda Item #:

Andy Hopkins — Jan 6, 2025
Budget Officer — Date

Division Director Signature *{optional}* — Date

James Harris (Dec 27, 2024 09:22 MST) — Dec 27, 2024

Department Director Signature — Date

Finance Director *{≤ $5,000}* — Date

City Manager *{≤ $60,000}* — Date

Docusign Envelope ID: 29371E81-45B5-476B-AD60-577126368E0A

NEW MEXICO DEPARTMENT OF TRANSPORTATION

Aviation Grant Agreement Form

Date: Nov 27, 2024

Project Location: SAF - SANTA FE MUNICIPAL AIRPORT

Sponsor: SANTA FE, CITY OF

Address: PO BOX 909

City: SANTA FE NM Zip Code: 87504

Participation FAA

Funding Breakdown

Contract No._____

Project No. SAF-25-03

Vendor No. 0000054360

Expiration Date_____

Purchase Order No:_____

Docusign Envelope ID: 29371E81-45B5-476B-AD60-577126368E0A

AVIATION GRANT AGREEMENT

This Agreement is between the New Mexico Department of Transportation, acting through its Aviation Division (Department), and the Sponsor. This Agreement is effective pursuant to Section 7, below.

Now Therefore, pursuant to the New Mexico Aviation Act, NMSA 1978, Section 64-1-11 et seq., and the New Mexico Municipal Airport Law, NMSA 1978 Sections 3-39-1 et seq., the parties agree as follows:

1. Purpose.
The purpose of this Agreement is to provide funding, authorized in Section 64-1-13, NMSA 1978, to the Sponsor to assist in financing an aviation project.

a. Project Description:

Reconstruct Apron Terminal, Reconstruct Perimeter Fencing, Construct/Extend Safety Area 15/33, Install Runway Signage/Markings 15/33

b. Site of Development.The site of development is identified on the property map, attached as Exhibit A.
c. Funding.Below is the funding for the Project. The State's contribution is the maximum amount that the Department will contribute. Attached as Exhibit B is the engineer's cost estimate.

State	Sponsor	Other	Total
$ 1,234,923	$ 137,214	$ 6,089,700	$ 7,461,837

2. The Sponsor Shall:

a. Pay all costs, perform all labor, and supply all material, except as described in the Engineers Estimate attached as EXHIBIT B.
b. Provide a representative from its organization who shall serve as the single point of contact for the Department.
c. Establish and maintain a resolution by which the Sponsor agrees to establish an airport maintenance program and appoint an individual to be responsible for management of the program.
d. Initiate engineering, survey, and all other design activities, inspect Project construction and, coordinate all meetings.
e. Be responsible for all design and pre-construction activities.
f. Initiate and cause to be prepared all necessary documents including plans, specifications, estimates (PS&E), and reports for this Project.
g. Assure that all design and PS&E are performed under the direct supervision of a Registered New Mexico Professional Engineer.
h. Design the Project in accordance with State and Federal guidelines and/or advisory circulars, hereby incorporated into this Agreement. Construction projects will be accomplished in accordance with the Federal Aviation Administration's Standards for Specifying Construction of Airports (Advisory Circular 150/5370-10, current edition).

i. Notify the Department when the plans and specifications are sufficiently complete for review.
j. Make no changes in design or scope of work without documented approval of the Department.
k. Advertise for and contract for the construction of the Project in accordance with federal and state laws or local ordinances.
l. Require the Engineer to prepare a final detailed estimate of the work, indicating the bid items, the quantity in each item, the unit bid price and cost of the items based on low acceptable bid prices. Progress estimates shall be submitted to the Department in acceptable form so that details of quantities allowed on various items of work shall be shown on each progress payment.
m. The Sponsor shall submit to the Department one complete set of plans and specifications which incorporate all comments and recommendations received during pre-bid activities and which have been fully executed by all involved parties.
n. The Sponsor shall take all steps, including litigation if necessary, to recover State funds spent in violation of state laws and rules. The Sponsor shall return any recovered state funds to the Department. It shall furnish to the Department, upon request, all documents and records pertaining to the determination of the amount of the state's share of any settlement, litigation, negotiation, or the efforts taken to recover such funds. All settlements or other final dispositions by the Sponsor, in court or otherwise, involving the recovery of such state funds shall be approved in advance by the Department.
o. The Sponsor shall, upon reasonable notice, allow the Department the right to inspect the Project for the purposes of determining if it is being constructed in a good and workmanlike manner, and if the approved plans and specifications are being complied with satisfactorily. If an inspection discloses a failure to substantially meet such requirements and standards the Department may terminate payment or payments until a mutually satisfactory remedy is reached.

3. The Department Shall:

a. Assign a contact person for this project.
b. Provide timely reviews of all submittals of scopes, plans, specifications, investigations or other documents.
c. The Department shall not provide an extensive check of any plans submitted by the Sponsor. The Department's concurrence of the Project plans does not relieve the Sponsor or its Consultant of their responsibility for errors and omissions.

4. Both Parties Agree:

a. The allowable costs of this Project shall not include costs determined by the Department to be ineligible for consideration under the Aviation Act.
b. The expenditure of any State money is subject to approval by the Department.
c. Funds granted under the Local Governments Road Fund, NMSA 1978 Section 67-3-28.2, shall not be used to administer this Project or used to meet the local match.

5. Method of Payment - Reimbursement.

The Department shall reimburse the Sponsor in accordance with the terms of this agreement. Claims for reimbursement shall be completed on form A-1159, Request for Reimbursement. Each request for reimbursement shall contain proof of payment for valid expenditures for services rendered by a third party or items of tangible property received by the Sponsor for the implementation of the Project. The Department reserves the right to withhold reimbursement on requests that are incorrect and/or incomplete. The Final reimbursement request must be received no later than thirty (30) days after completion of the project or the expiration of this Agreement.

The Sponsor shall not be reimbursed for any costs incurred prior to the full execution of the Agreement, after the expiration of the Agreement or in excess of the maximum dollar amount of the agreement unless the maximum dollar amount is duly amended prior to incurring the service or deliverable. Any unexpended portion of funds subject to this Agreement shall revert to the State Aviation Fund.

6. Accountability of Receipts and Disbursements.

There shall be strict accountability for all receipts and disbursements. The Sponsor shall maintain all records and documents relative to the Project for a minimum of three (3) years after completion of said Project. The Sponsor shall furnish the Department or State Auditor, upon demand, all records which support the terms of this Agreement.

Docusign Envelope ID: 29371E81-45B5-476B-AD60-577126368E0A

7. Term

The Agreement becomes effective upon signatures of all parties. The Agreement's effective date is the date opposite of the NMDOT Cabinet Secretary or Designee's signature on the signature page. This agreement shall expire two (2) years from the effective date, unless terminated pursuant to Sections 8 and 17, below.

8. Termination for Cause.

The Department has the option to terminate this Agreement if the Sponsor fails to comply with any provision of this Agreement. A written notice of termination shall be given at least thirty (30) days prior to the intended date of termination and shall identify all of the Sponsor's breaches on which the termination is based.

The Department may provide the Sponsor a reasonable opportunity to correct the breach. If within ten (10) days after receipt of a written notice of termination, the Sponsor has not corrected the breach or, in the case of a breach which cannot be corrected in ten (10) days, the Sponsor has not begun and proceeded in good faith to correct the breach, the Department may declare the Sponsor in default and terminate the Agreement. The Department shall retain any and all other remedies available to it under the law.

By such termination neither party may nullify obligations already incurred for performance or failure to perform for the work rendered prior to the date of termination. However, neither party shall have any obligation to perform services or make payment for services rendered after such date of termination.

9. Disposition of Property.

a. Upon termination of this Agreement, the Sponsor shall account for any remaining property, materials or equipment belonging to the Department and dispose of them as directed by the Department.
b. Any equipment, materials or supplies procured under this Agreement shall be used solely for aviation purposes maintained according to the manufacturers guidelines and stored at the airport.

10. Representations and Certification.

The Sponsor, by signing this Agreement, represents and certifies the following:

a. Legal Authority - The Sponsor has the legal power and authority to: (1) do all things necessary in order to undertake and carry out the Project in conformity with the provisions stated in the New Mexico Aviation Act and Rules and Regulations pursuant thereto; (2) accept, receive and disburse grant funds from the State of New Mexico in aid of the Project; and (3) carry out all provisions stated in this Aviation Grant Agreement.

b. Defaults - The Sponsor is not in default on any obligation to the State of New Mexico relative to the development, operation or maintenance of any airport or aviation project.

c. Possible Disabilities - The Sponsor states, by execution of this Agreement, there are no facts or circumstance (including the existence of effective or proposed leases, use agreements, or other legal instruments affecting use of the airport or the existence of pending litigation or other legal proceedings) which in reasonable probability might make it impossible for the Sponsor to carry out and complete the Project.

d. Land - The Sponsor holds the property interest in the areas of land which are to be developed or used as part of or in connection with the Project and is identified in a current Airport Property Map. The Sponsor further certifies that the aforementioned is based on a title examination by a qualified attorney or title company who has determined that the Sponsor holds the stated property interests.

11. Assurances.

The Sponsor, by signing this Agreement, covenants and agrees to the following Assurances:

a. That it will operate the airport for the use and benefit of the public on fair and reasonable terms and without unjust discrimination.
b. That it will keep the airport open to all types, kinds and classes of aeronautical use without discrimination between such types, kinds, and classes. The Sponsor shall establish fair, equal and not unjustly discriminatory conditions to be met by all users of the airport as may be necessary for the safe and efficient operation.

c. Neither it nor any person or organization occupying space at the airport will discriminate against any person or class of persons by reason of race, color, creed, or national origin in the use of the facility and, further that any person, firm or corporation rendering service to the public on the airport will do so on a fair, equal and not unjustly discriminatory basis.
d. Operate and maintain in a safe and serviceable condition the airport and all facilities which are necessary to serve the aeronautical users and will not permit any activity which would interfere with its use for airport purposes.
e. By acquisition of land interest, acquisition of easements, airspace zoning, or other accepted means, protect the runway approaches and the airspace in the immediate vicinity of the airport from the construction, alteration, erection or growth of any structure which would interfere with the use or operation of the airport.
f. Comply with the New Mexico Aviation Act and associated provisions, NMSA 1978 Sections 64-1-1 to 64-5-4 and the New Mexico Municipal Airport Law, NMSA 1978 Sections 3-39-1 et seq.
g. That it shall not award the contract nor give bidding documents to any contractor who is subject to suspension or debarment by the U.S. Department of Transportation or the Department at the time of the bidding or award of the contract. Violation of this provision shall void this Agreement.

12. Third Party Beneficiaries.
It is not intended by any of the provisions of any part of this Agreement to create in the public or any member thereof a third party beneficiary or to authorize anyone not a party to the Agreement to maintain a suit(s) for wrongful death(s), bodily and/or personal injury(ies) to person(s), damage(s) to property(ies), and/or any other claim(s) whatsoever pursuant to the provisions of this Agreement.

13. New Mexico Tort Claims Act.
As between the Department and the Sponsor, neither party shall be responsible for liability incurred as a result of the other party's acts or omissions in connection with this Agreement. Any liability incurred in connection with this Agreement is subject to the immunities and limitations of the New Mexico Tort Claims Act, NMSA 1978, Section 41-4-1, *et seq*. This paragraph is intended only to define the liabilities between the parties and it is not intended to modify, in any way, the parties' liabilities as governed by common law or the New Mexico Tort Claims Act.

14. Scope of Agreement.
This Agreement incorporates all the agreements, covenants, and understandings between the parties concerning the subject matter. All such covenants, agreements, and understandings have been merged into this written Agreement. No prior Agreement or understandings, verbal or otherwise, of the parties or their agents shall be valid or enforceable unless embodied in this Agreement.

15. Terms of this Agreement.
The terms of this Agreement are lawful; performance of all duties and obligations shall conform with and do not contravene any state, local, or federal statutes, regulations, rules, or ordinances.

16. Equal Opportunity Compliance.
The parties agree to abide by all federal and state laws and rules and regulations, and executive orders of the Governor of the State of New Mexico, pertaining to equal employment opportunity. In accordance with all such laws and rules and regulations, and executive orders of the Governor of the State of New Mexico, the parties agree to assure that no person in the United States shall, on the grounds of race, color, national origin, ancestry, sex, sexual preference, age or handicap, be excluded from employment with, or participation in, any program or activity performed under this Agreement. If the parties are found to not be in compliance with these requirements during the term of this Agreement, the parties agree to take appropriate steps to correct these deficiencies.

17. Appropriations and Authorizations of State and Federal Funds.
The terms of this Agreement are contingent upon sufficient appropriations and authorizations being made by the governing board of the Sponsor, the Legislature of New Mexico, or the Congress of the United States if federal funds are involved, for performance of the Agreement. If sufficient appropriations and authorizations are not made by the Sponsor, Legislature or the Congress of the United States if federal funds are involved, this Agreement shall terminate upon written notice being given by one party to the other. The Department and the Sponsor are expressly not committed to expenditure of any funds until such time as they are programmed, budgeted, encumbered, and approved for expenditure.

18. Severability.
In the event that any portion of this Agreement is determined to be void, unconstitutional or otherwise unenforceable, the remainder of this Agreement shall remain in full force and effect.

19. Applicable Law.
The Laws of the State of New Mexico shall govern this Agreement, without giving effect to its choice of law provisions. Venue shall be proper only in a New Mexico court of competent jurisdiction in accordance with NMSA 1978, Section 38-3-1(G).

20. Principal Contacts and Notices.
The principal contacts for this Agreement are listed below. Except as otherwise specified, all notices shall be in writing (including notice by facsimile or E-mail) and shall be given to the principal contacts listed below.

Address:	New Mexico Department of Transportation - Aviation Division 3501 Access Rd C. Albuquerque, NM 87106
General Office:	(505) 795-1401
Fax:	(505) 244-1790
E-mail:	Aviation.Division@dot.nm.gov

Name	JAMES HARRIS			
Title	AIRPORT DIRECTOR			
Sponsor	SANTA FE, CITY OF			
Address	PO BOX 909			
City	SANTA FE	NM	Zip Code	87504
Office Phone		Fax		
E-Mail				

21. Amendment.
This Agreement shall not be altered, modified, or amended except by an instrument in writing and executed by the parties.

In witness whereof, each party is signing this Agreement on the date stated opposite of that party's signature.

NEW MEXICO DEPARTMENT OF TRANSPORTATION

By:_____ Date: _____
Cabinet Secretary or Designee

Recommended by:

By:_____ Date: _____
Aviation Division Director
or Designee

Approved as to form and legal sufficiency by the New Mexico Department of Transportation's Office of General Counsel

By:_____ Date: _____
Assistant General Counsel

SPONSOR

Print Name:_____

By:_____ Date:_____

Title: _____

Docusign Envelope ID: 29371E81-45B5-476B-AD60-577126368E0A

EXHIBIT A

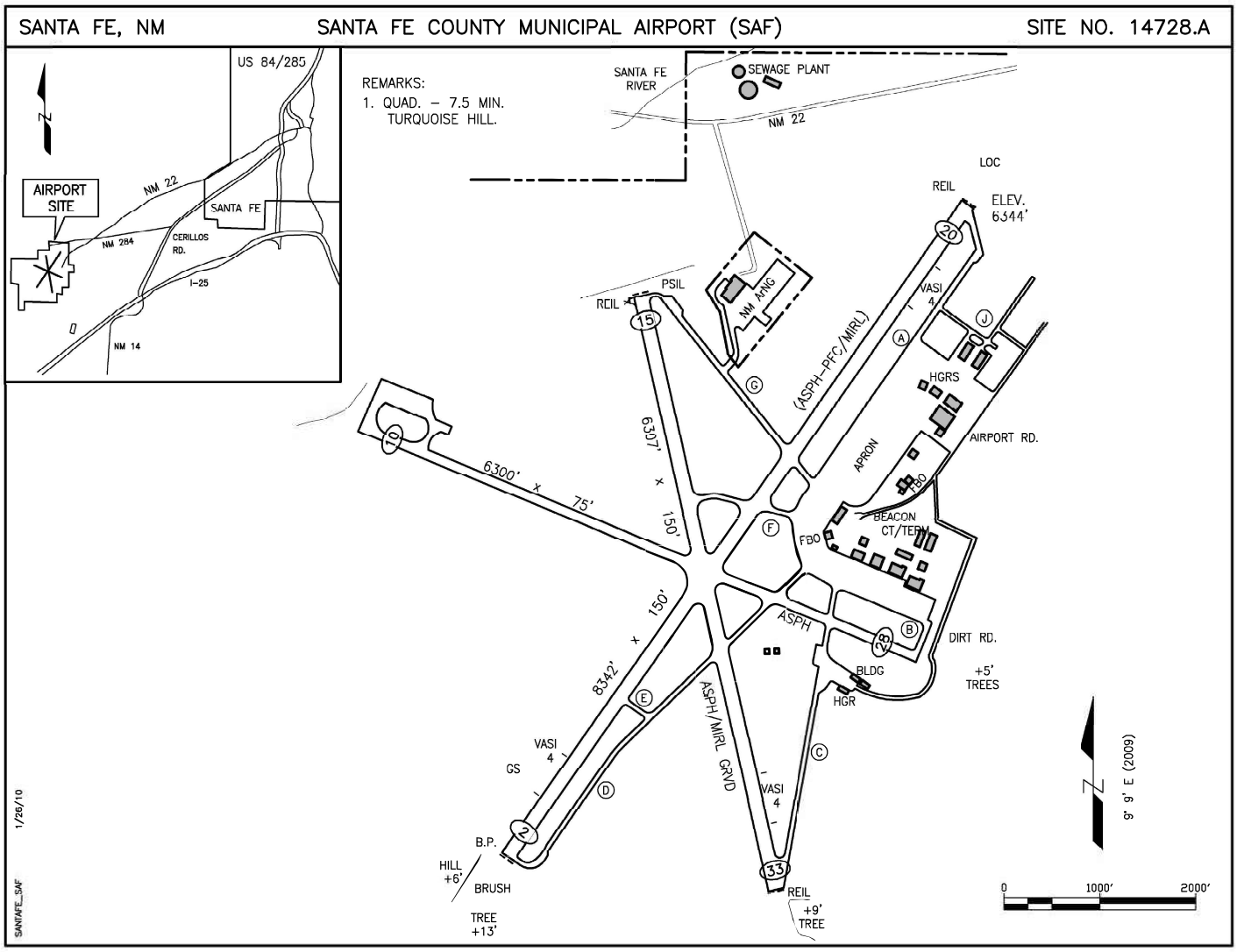

Docusign Envelope ID: 29371E81-45B5-476B-AD60-577126368E0A

Santa Fe Muncipal

EXHIBIT B
PLEASE OMIT CENTS

ITEM NO.	ITEM OF WORK AND DESCRIPTION	TOTAL ESTIMATED COSTS	STATE FUNDS REQUESTED	SPONSOR FUNDS	OTHER FUNDS (FAA)
1		$7,461,837	$1,234,923	$ 137,214	$ 6,089,700
		$0	$0	$ 0	$ 0
		$0	$0	$ 0	$ 0
		$0	$0	$ 0	$ 0
		$0	$0	$ 0	$ 0
		$0	$0	$ 0	$ 0
		$0	$0	$ 0	$ 0
		$0	$0	$ 0	$ 0
		$0	$0	$ 0	$ 0
	TOTALS	$ 7,461,837	$1,234,923	$ 137,214	$ 6,089,700

IN WITNESS WHEREOF, the parties have agreed to this Grant Agreement as of the date when it is executed by the parties, whichever signature occurs last.

CITY OF SANTA FE:

_____
ALAN WEBBER, MAYOR

DATE: _____

ATTEST:

_____
ANDRÉA SALAZAR, CITY CLERK

CITY ATTORNEY'S OFFICE:

Kevin L. Nault
Kevin L. Nault (Dec 20, 2024 09:23 MST)
_____
ASSISTANT CITY ATTORNEY

APPROVED FOR FINANCES:

Emily K. Oster
_____
EMILY OSTER, FINANCE DIRECTOR

CITY OF SANTA FE

Date: January 10, 2025

To: Governing Body

Via: Jesse Roach, Interim Public Utilities Department Director
Regina Wheeler, Public Works Department Director Regina Wheeler
Regina Wheeler (Jan 13, 2025 14:40 MST)

From: Taylor Jurgens, Engineer, Water Division TRJ

Subject: Asset Management Software Contract and Budget Amendment Resolution (BAR)

Vendor Name: Vertosoft, LLC

Vendor Number: 10788

ACTION:
Request for Approval of Goods and Services Contract with Vertosoft, LLC for the Purchase of Asset Management Software and Implementation Services in the Total Amount Not to Exceed $1,913,591.72, including NM GRT, for a Five-Year Term. (Taylor Jurgens, Engineer: trjurgens@santafenm.gov)

1. Request for Approval of a Budget Amendment Resolution (BAR) Increasing FY25 Public Utilities Admin Software by $257,922 and Decreasing Available Water Fund Budgets in the Total Amount of $146,694 and Wastewater Enterprise Cash Balance by $111,228.
2. Request for Approval of a Budget Amendment Resolution (BAR) Increasing FY25 Public Utilities Admin Software Purchases by $237,707 and Decreasing Public Works Fund Budgets in the Total Amount of $237,707.

BACKGROUND AND SUMMARY:
The City of Santa Fe Public Utilities Department and Public Works Department intend to procure OpenGov/Cartegraph Enterprise Asset Management Software via an existing GSA agreement with Vertosoft, LLC. The software will be a valuable tool for City staff to improve management of existing assets and aid in planning for future projects.

The software will be used for maintenance management activities, work order management, life cycle cost analysis, risk and criticality assessment, capital improvement planning, and asset data reporting among other functions. The software will integrate with the City's existing GIS system and includes mapping capabilities for assets and facilities. This is a cloud-based solution and includes a mobile application for use in the field. The mobile application can be used to view GIS maps, review asset information, collect field data, and complete work orders.

The system includes capabilities for Sanitary Sewer, Wastewater Treatment, Water Distribution, Water Treatment, Stormwater, Transportation, Parks and Recreation, and Walkability.

Starting over a year ago, the Public Utilities Department completed a thorough software evaluation process in which it reviewed several different software vendors to identify which vendor provided the

solution that was best suited for the City's needs. The evaluation process included developing a software requirements list, reviewing detailed software demonstrations from the vendors, and performing reference checks. After the evaluation was complete, OpenGov/Cartegraph was the selected vendor.

The contract will be for a five-year term. The total contract amount is not to exceed $1,913,591.72, including NM GRT. The expected cost in the first year is $495,627.50, including NM GRT. Approximately $168,500 of this will be one-time implementation costs, with the remainder being the annual software subscription cost. Year two and beyond will just include the annual subscription cost with an annual escalation rate. The requested BARs are just for the first-year costs. Costs for subsequent years will be budgeted annually.

PROCUREMENT METHOD:
The procurement method is the General Services Administration (GSA) Contract #GS-35F-688GA which expires on September 18, 2027.

Chief Procurement Officer Approval: _____ **Date:** Jan 13, 2025
Comment/Exceptions: _____

Supporting Information:

CONTRACT NUMBER:
The FY25 Munis contract number is 325XXX

$$$$$ SOURCE/REVENUE: ☒Expense ☒Revenue
The funding source is: Public Works, Water, and Wastewater
Fund Name/Number: Utilities Administration Fund / 511
Munis Org Name/Number: PUD Admin / 5115501
Munis Object Name/Number: Software > $5k / 570850

Grant Award Number: N/A

Grant Manager / Accounting Officer Approval: _____ **Date:** _____
Comment/Exceptions: _____

Project Ledger #: _____

Budget Officer Approval: Andy Hopkins **Date:** Jan 13, 2025
Comment/Exceptions: _____

CAPITAL ASSET (will this procurement result in a tangible item that costs more than $5,000?):

☒Yes | ☐ No

 # (if known): _____

Repair or Replacement of Existing Equipment:

☐Yes | ☒ No

If yes -> ☐Repair | ☐ Replacement

Please explain: _____

Capital Project:
(New and improvement projects that are going to cost $10,000 or more)
☐ Yes | ☒ No

Project Ledger #: _____

Anticipated length of project: _____

Asset Manager Approval: _____ **Date:** _____
Comment/Exceptions: _____

Department Approvals:
IT Components: ☒ **Yes** | ☐ **No**
Vehicles: ☐ **Yes** | ☒ **No**
Facilities, Furniture, Fixtures, Equipment: ☐ **Yes** | ☒ **No**

Approval: Eric Candelaria (Jan 14, 2025 16:57 MST) **Title:** IT Director **Date:** Jan 14, 2025
Approval: _____ **Title:** _____ **Date**: _____
Comment & Exceptions: _____

Department Contract Administrator Contact Info:
Gina Wolff, vawolff@santafenm.gov

ATTACHMENTS:
General Services Contract
Statement of Work
Vendor's Quote
GSA Agreement
Certificate of Liability Insurance
CPO Determination
Horizons declination
2 BARs
ITT Approval Form

Log # *{Finance use only}*:	
Journal # *{Finance use only}*:	

City of Santa Fe, New Mexico
BUDGET AMENDMENT RESOLUTION (BAR)

DEPARTMENT / DIVISION NAME	DATE
Public Utilities Department / Water Division	1/8/2025

ITEM DESCRIPTION	ORG	OBJECT	PROJECT	INCREASE	DECREASE
EXPENDITURES				*{enter as positive #}*	*{enter as negative #}*
Water, Engineering Professional Contracts	5050383	510300			(60,000)
Water Operations, Admin	5050381	510340			(26,767)
Software Purchases > $5k	5115501	570850		257,922	
Operating Transfer from Water to Public Utilities Admin	5050383	750511		60,000	
Operating Transfer from Water to Public Utilities Admin	5050381	750511		26,767	
Operating Transfer from Wastewater to Public Utiltites Admin	5000361	750511		111,228	
REVENUES				*{enter as negative #}*	*{enter as positive #}*
Operating Transfer from Water	5115501	650505		(86,767)	
Operating Transfer from Wastewater Management	5115501	650500		(111,228)	
				$ 257,922.00	$ (86,767)

JUSTIFICATION: *(use additional page if needed)*
--Attach supporting documentation/memo

Please see attached Memo.

{Complete section below if BAR results in a net change to ANY Fund}

Fund(s) Affected	Fund Balance Increase/(Decrease)
500	(111,228)
505	(59,927)
TOTAL:	**(171,155)**

Jonna Leigh Stack — 1/9/2025
Prepared By *{print name}* — Date

Division Director Signature *{optional}* — Date

Jan 13, 2025
Interim Department Director Signature, Jesse Roach — Date

{Use this form for Finance Committee/ City Council agenda items ONLY}

CITY COUNCIL APPROVAL

City Council Approval Date

Agenda Item #:

Andy Hopkins — Jan 13, 2025
Budget Officer — Date

Finance Director *{≤ $5,000}* — Date

City Manager *{≤ $60,000}* — Date

Log # *{Finance use only}*:	
Journal # *{Finance use only}*:	

City of Santa Fe, New Mexico
BUDGET AMENDMENT RESOLUTION (BAR)

DEPARTMENT / DIVISION NAME	DATE
Public Utilities / Public Utilities Admin	12/9/2024

ITEM DESCRIPTION	ORG	OBJECT	PROJECT	INCREASE	DECREASE
EXPENDITURES				*{enter as positive #}*	*{enter as negative #}*
Software - Open Gov (Public Works)	5115501	570850		237,707	
Software - Stormwater	2310411	570850			(63,927)
Operating Transfer to Public Utilities Admin	2310411	750511		63,927	
Software - QOL PTW	2554150	570850			(101,622)
Operating Transfer to Public Utilities Admin	2554150	750511		101,622	
Software - Streets Admin	1000471	570850			(37,123)
Software Subscriptions - Streets Admin	1000471	530710			(35,035)
Operating Transfer to Public Utilities Admin	1000471	750511		72,158	
REVENUES				*{enter as negative #}*	*{enter as positive #}*
Operating Transfer from Stormwater	5115501	650231		(63,927)	
Operating Transfer from QOL PTW	5115501	650255		(101,622)	
Operating Transfer from Streets Admin	5115501	650100		(72,158)	
				$ 237,707	$ (237,707)

JUSTIFICATION: *(use additional page if needed)*
--Attach supporting documentation/memo

FY 25 Public Works and Public Utilities Operating Transfers to fund software purchase for asset management.

{Complete section below if BAR results in a net change to ANY Fund}

Fund(s) Affected	Fund Balance Increase/(Decrease)
TOTAL:	**0**

Halona Crowe — 12/9/2024
Prepared By *{print name}* — Date

{Use this form for Finance Committee/ City Council agenda items ONLY}

Andy Hopkins — Jan 13, 2025
Budget Officer — Date

CITY COUNCIL APPROVAL

City Council Approval Date

Agenda Item #:

Division Director Signature — Date

Finance Director *{≤ $5,000}* — Date

Regina Wheeler — Jan 13, 2025
Regina Wheeler (Jan 13, 2025 14:40 MST)
Department Director Signature — Date

City Manager *{≤ $60,000}* — Date

Item #: _____
Munis Contract #: _____
GSA #: _GS-35F-688GA__

CITY OF SANTA FE
GENERAL SERVICES CONTRACT

Software

THIS CONTRACT is made and entered into by and between the City of Santa Fe, herein after referred to as the "City," and Vertosoft, LLC herein after referred to as the "Contractor."

IT IS MUTUALLY AGREED BETWEEN THE PARTIES:

1. **Definitions**

A. "Products and Services Schedule" refers to the complete list of products and services offered under this Contract and the price for each. Product and service descriptions may be amended with the prior approval of the Contract Administrator. New products and services shall not be added to the Products and Services Schedule.

B. "Business Hours" means 8:00 a.m. to 5:00 p.m. Mountain Time.

2. **Scope of Work**

A. The Contractor shall perform the scope of work outlined in Exhibit A.

3. **Compensation.**

Compensation Schedule. The City shall pay to the Contractor based upon fixed prices for each Deliverable, per the schedule outlined in Exhibit B, less retainage, if any, as identified in paragraph C of this Clause.

A. The total amount payable to the Contractor under this Agreement shall not exceed one million seven hundred sixty-eight thousand seven hundred seventy-three dollars and forty cents ($1,768,773.40), plus applicable New Mexico gross receipts tax. The New Mexico gross receipts tax levied on the amounts payable under this Agreement totaling one hundred forty-four thousand eight hundred eighteen dollars and thirty-two cents ($144,818.32) shall be paid by the City to the Contractor.

B. Payment. The total compensation under this Agreement shall not exceed one million nine hundred thirteen thousand five hundred ninety-one dollars and seventy-two cents ($1,913,591.72), including applicable New Mexico gross receipts tax. This amount is a maximum and not a guarantee that the work assigned to be performed by Contractor under this Agreement shall equal the amount stated herein. The Parties do not intend for the Contractor to continue to provide Services without compensation when the total compensation amount is reached. Contractor is responsible for notifying the City when the Services provided under this Agreement reach the total compensation amount. In no event will the Contractor be paid for Services provided in excess of

the total compensation amount without this Agreement being amended in writing prior to services, in excess of the total compensation amount being provided.

Payment shall be made upon Acceptance of each Deliverable and upon the receipt and Acceptance of a detailed, certified Payment Invoice. Payment will be made to the Contractor's designated mailing address. In accordance with Section 13-1-158 NMSA 1978, payment shall be tendered to the Contractor within thirty (30) days of the date of written certification of Acceptance. All Payment Invoices MUST BE received by the City no later than fifteen (15) days after the termination of this Agreement. Payment Invoices received after such date WILL NOT BE PAID.

C. Retainage. Not Applicable – The Parties agree there is no retainage.

D. Performance Bond. Not Applicable. The Parties agree there is no Performance Bond.

5. **Term**

THIS CONTRACT SHALL NOT BECOME EFFECTIVE UNTIL APPROVED IN WRITING BY THE CITY. This contract shall terminate **five (5) years from date of final signature.**

6. **Default and Force Majeure**

The City reserves the right to cancel all, or any part of any orders placed under this contract without cost to the City, if the Contractor fails to meet the provisions of this contract and, except as otherwise provided herein, to hold the Contractor liable for any excess cost occasioned by the City due to the Contractor's default. The Contractor shall not be liable for any excess costs if failure to perform the order arises out of causes beyond the control and without the fault or negligence of the Contractor; such causes include, but are not restricted to, acts of God or the public enemy, acts of the State or Federal Government, fires, floods, epidemics, quarantine restrictions, strikes, freight embargoes, unusually severe weather and defaults of sub-contractors due to any of the above, unless the City shall determine that the supplies or services to be furnished by the sub-contractor were obtainable from other sources in sufficient time to permit the Contractor to meet the required delivery scheduled. The rights and remedies of the City provided in this paragraph shall not be exclusive and are in addition to any other rights now being provided by law or under this contract.

7. **Termination**

A. Grounds. The City may terminate this Contract for convenience or cause. For contracts within their authority, the City Manager or their designee is authorized to provide the notice of termination, otherwise such notice of termination shall be provided by the Mayor, or their designee as authorized by the Governing Body. The Contractor may only terminate this Contract based upon the City's uncured, material breach of this Contract.

B. Notice: City Opportunity to Cure.

1) The City shall give the Contractor written notice of termination at least thirty (30) days prior to the intended date of termination.

2) Contractor shall give City written notice of termination at least thirty (30) days prior to the intended date of termination, which notice shall (i) identify all the City's material breaches of this Contract upon which the termination is based and (ii) state what the City must do to cure such material breaches. Contractor's notice of termination shall only be effective (i) if the City does not cure all material breaches within the thirty (30) day notice period or (ii) in the case of material breaches that cannot be cured within thirty

(30) days, the City does not, within the thirty (30) day notice period, notify the Contractor of its intent to cure and begin with due diligence to cure the material breach.

3) Notwithstanding the foregoing, this Contract may be terminated immediately upon written notice to the Contractor (i) if the Contractor becomes unable to perform the services contracted for, as determined by the City; (ii) if, during the term of this Contract, the Contractor is suspended or debarred by the City; or (iii) the Contract is terminated pursuant to Paragraph 17, "Appropriations", of this Contract.

C. Liability. Except as otherwise expressly allowed or provided under this Contract, the City's sole liability upon termination shall be to pay for acceptable work performed prior to the Contractor's receipt or issuance of a notice of termination; provided, however, that a notice of termination shall not nullify or otherwise affect either party's liability for pre-termination defaults under or breaches of this Contract. The Contractor shall submit an invoice for such work within thirty (30) days of receiving or sending the notice of termination. *THIS PROVISION IS NOT EXCLUSIVE AND DOES NOT WAIVE THE CITY'S OTHER LEGAL RIGHTS AND REMEDIES CAUSED BY THE CONTRACTOR'S DEFAULT/BREACH OF THIS CONTRACT.*

8. **Amendment**

A. This Contract shall not be altered, changed, or amended except by instrument in writing executed by the parties hereto and all other required signatories.

B. If the City proposes an amendment to the Contract to unilaterally reduce funding due to budget or other considerations, the Contractor shall, within thirty (30) days of receipt of the proposed Amendment, have the option to terminate the Contract, pursuant to the termination provisions as set forth in Paragraph 7 herein, or to agree to the reduced funding.

9. **Status of Contractor**

The Contractor, and Contractor's agents and employees, are independent Contractors for the City and are not employees of the City. The Contractor, and Contractor's agents and employees, shall not accrue leave, retirement, insurance, bonding, use of City vehicles, or any other benefits afforded to employees of the City because of this Contract. The Contractor acknowledges that all sums received hereunder are personally reportable by the Contractor for income tax purposes, including without limitation, self-employment tax and business income tax. The Contractor agrees not to purport to bind the City unless the Contractor has written authority to do so, and then only within the strict limits of that authority.

10. **Assignment**

The Contractor shall not assign or transfer any interest in this Contract or assign any claims for money due or to become due under this Contract without the prior written approval of the City.

11. **Subcontracting**

The Contractor shall not subcontract any portion of the services to be performed under this Contract without the prior written approval of the City. No such subcontract shall relieve the primary Contractor from its obligations and liabilities under this Contract, nor shall any subcontract obligate direct payment from the City.

12. **Non-Collusion**

In signing this Contract, the Contractor certifies the Contractor has not, either directly or indirectly, entered into action in restraint of free competitive bidding in connection with this offer submitted to the City.

13. **Inspection of Plant**

The City may inspect, at any reasonable time during Contractor's regular business hours and upon prior written notice, the Contractor's plant or place of business, or any subcontractor's plant or place of business, which is related to the performance of this contract.

14. **Commercial Warranty**

The Contractor agrees that the tangible personal property or services furnished under this Contract shall be covered by the most favorable commercial warranties the Contractor gives to any customer for such tangible personal property or services, and that the rights and remedies provided herein shall extend to the City and are in addition to and do not limit any rights afforded to the City by any other clause of this order. The contractor agrees not to disclaim warranties of fitness for a particular purpose or merchantability.

15. **Condition of Proposed Items**

Where tangible personal property is a part of this Contract, all proposed items are to be NEW and of most current production, unless otherwise specified.

16. **Records and Audit**

During the term of this Contract and for three years thereafter, the Contractor shall maintain detailed records pertaining to the services rendered and products delivered. These records shall be subject to inspection by the City, the State Auditor and other appropriate state and federal authorities. The City shall have the right to audit billings both before and after payment. Payment under this Contract shall not foreclose the right of the City to recover excessive or illegal payments.

17. **Appropriations**

The terms of this Contract, and any orders placed under it, are contingent upon sufficient appropriations and authorization being made by the Governing Body for the performance of this Contract. If sufficient appropriations and authorization are not made by the legislature, this Contract, and any orders placed under it, shall terminate upon written notice being given by the City to the Contractor. The City's decision as to whether sufficient appropriations are available shall be accepted by the Contractor and shall be final. If the City proposes an amendment to the Contract to unilaterally reduce funding, the Contractor shall have the option to terminate the Contract or to agree to the reduced funding, within thirty (30) days of receipt of the proposed amendment.

18. **Release**

The Contractor, upon final payment of the amount due under this Contract, releases the City, its officers, and employees, from all liabilities, claims and obligations whatsoever arising from or under this Contract. The Contractor agrees not to purport to bind the City, unless the Contractor has express written authority to do so, and then only within the strict limits of that authority.

19. **Confidentiality**

Any confidential information provided to or developed by the Contractor in the performance of this Contract shall be kept confidential and shall not be made available to any individual or organization by the Contractor without prior written approval by the City.

20. **Conflict of Interest**

A. The Contractor represents and warrants that it presently has no interest and, during the term of this Contract, shall not acquire any interest, direct or indirect, which would conflict in any manner or degree with the performance or services required under the Contract. The Contractor shall comply with any applicable provisions of the New Mexico Governmental Conduct Act and the New Mexico Financial Disclosures Act.

B. The Contractor further represents and warrants that it has complied with, and, during the term of this Contract, will continue to comply with, and that this Contract complies with all applicable provisions of the Governmental Conduct Act, Chapter 10, Article 16 NMSA 1978.

C. Contractor's representations and warranties in Paragraphs A and B of this Paragraph are material representations of fact upon which the City relied when this Contract was entered into by the parties. Contractor shall provide immediate written notice to the City if, at any time during the term of this Contract, Contractor learns that Contractor's representations and warranties in Paragraphs A and B of this Paragraph 20 were erroneous on the effective date of this Contract or have become erroneous by reason of new or changed circumstances. If it is later determined that Contractor's representations and warranties in Paragraphs A and B of this Paragraph 20 were erroneous on the effective date of this Contract or have become erroneous by reason of new or changed circumstances, in addition to other remedies available to the City and notwithstanding anything in the Contract to the contrary, the City may immediately terminate the Contract.

D. All terms defined in the Governmental Conduct Act have the same meaning in this section.

21. **Approval of Contractor Representative(s)**

The City reserves the right to require a change in Contractor representative(s) if the assigned representative(s) are not, in the opinion of the City, adequately serving the needs of the City.

22. **Scope of Contract; Merger**

This Contract incorporates all the Agreements, covenants and understandings between the parties hereto concerning the subject matter hereof, and all such covenants, agreements, and understandings have been merged into this written contract.

This Contract is issued against the state or agency Master Agreement, established, and maintained by the General Services Administration (issuing entity), GSA Contract No. GS-35F-688GA, and through this language hereby incorporates this agreement by reference and is included in the order of precedence.

23. **Notice**

The Procurement Code, NMSA 1978, Sections 13-1-28 through 13-1-199, imposes civil and criminal penalties for its violation. In addition, the New Mexico criminal statutes impose felony penalties for bribes, gratuities, and kickbacks.

24. **Equal Opportunity Compliance**

The Contractor agrees to abide by all federal and state laws, and local Ordinances, pertaining to equal employment opportunity. In accordance with all such laws, rules, and regulations, the Contractor agrees to assure that no person in the United States shall on the grounds of race, religion, color, national origin, ancestry, sex, age, physical or mental handicap, or serious medical condition, spousal affiliation, sexual orientation or gender identity, be excluded from employment with or participation in, be denied the benefits of, or be otherwise subjected to discrimination under any program or activity performed under this Contract. If Contractor is found not to be in compliance with these requirements during the life of this Contract, Contractor agrees to take appropriate steps to correct these deficiencies.

25. **Indemnification**

The Contractor shall hold the City and its employees harmless and shall indemnify the City and its employees against any and all claims, suits, actions, liabilities and costs of any kind, including attorney's fees for personal injury or damage to property arising from the acts or omissions of the Contractor, its agents, officers, employees or subcontractors. The Contractor shall not be liable for any injury or damage as a result of any negligent act or omission committed by the City, its officers or employees.

26. **New Mexico Tort Claims Act**

Any liability incurred by the City of Santa Fe in connection with this Contract is subject to the immunities and limitations of the New Mexico Tort Claims Act, Section 41-4-1, et. seq. NMSA 1978, as amended. The City and its "public employees" as defined in the New Mexico Tort Claims Act, do not waive sovereign immunity, do not waive any defense and do not waive any limitation of liability pursuant to law. No provision in this Contract modifies or waives any provision of the New Mexico Tort Claims Act.

27. **Applicable Law**

The laws of the State of New Mexico shall govern this Contract, without giving effect to its choice of law provisions. Venue shall be proper only in a New Mexico court of competent jurisdiction in accordance with NMSA 1978, Section 38-3-2. By execution of this Contract, Contractor acknowledges and agrees to the jurisdiction of the courts of the State of New Mexico over any and all lawsuits arising under or out of any term of this Contract.

28. **Limitation of Liability**

The Contractor's liability to the City, for any cause whatsoever shall be limited to the purchase price paid to the Contractor for the products and services that are the subject of the City's, claim. The foregoing limitation

does not apply to paragraph 25 of this Contract or to damages resulting from personal injury caused by the Contractor's negligence.

29. **Incorporation by Reference and Precedence**

If this Contract has been procured pursuant to a request for proposals, this Contract is derived from (1) the request for proposal, (including any written clarifications to the request for proposals and any City response to questions); (2) the Contractor's best and final offer; and (3) the Contractor's response to the request for proposals.

In the event of a dispute under this Contract, applicable documents will be referred to for the purpose of clarification or for additional detail in the following order of precedence: (1) amendments to the Contract in reverse chronological order; (2) the Contract, including the scope of work and all terms and conditions thereof; (3) the request for proposals, including attachments thereto and written responses to questions and written clarifications; (4) the Contractor's best and final offer if such has been made and accepted by the City; and (5) the Contractor's response to the request for proposals.

30. **Workers' Compensation**

The Contractor agrees to comply with state laws and rules applicable to workers' compensation benefits for its employees. If the Contractor fails to comply with the Workers' Compensation Act and applicable rules when required to do so, this Contract may be terminated by the City.

31. **Inspection**

If this contract is for the purchase of tangible personal property (goods), final inspection and acceptance shall be made at Destination. Tangible personal property rejected at Destination for non-conformance to specifications shall be removed at Contractor's risk and expense promptly after notice of rejection and shall not be allowable as billable items for payment.

32. **Inspection of Services**

If this contract is for the purchase of services, the following terms shall apply.

A. Services, as used in this Article, include services performed, workmanship, and material furnished or utilized in the performance of services.

B. The Contractor shall provide and maintain an inspection system acceptable to the City covering the services under this Contract. Complete records of all inspection work performed by the Contractor shall be maintained and made available to the City and for as long thereafter as the Contract requires. The City has the right to inspect and test all services contemplated under this Contract to the extent practicable at all times and places during the term of the Contract. The City shall perform inspections and tests in a manner that will not unduly delay or interfere with Contractor's performance.

C. If the City performs inspections or tests on the premises of the Contractor or a subcontractor, the Contractor shall furnish, and shall require subcontractors to furnish, at no increase in contract price, all reasonable facilities and assistance for the safe and convenient performance of such inspections or tests.

D. If any part of the services do not conform with the requirements of this Contract, the City may require the Contractor to re-perform the services in conformity with the requirements of this Contract at no increase in contract amount. When the defects in services cannot be corrected by re-performance, the City may:

(1) require the Contractor to take necessary action(s) to ensure that future performance conforms to the requirements of this Contract; and

(2) reduce the contract price to reflect the reduced value of the services performed.

E. If the Contractor fails to promptly re-perform the services or to take the necessary action(s) to ensure future performance in conformity with the requirements of this Contract, the City may:

(1) by contract or otherwise, perform the services and charge to the Contractor any cost incurred by the City that is directly related to the performance of such service; or

(2) terminate the contract for default.

33. **Insurance**

If the services contemplated under this Contract will be performed on or in City facilities or property, Contractor shall maintain in force during the entire term of this Contract, the following insurance coverage(s), naming the City as additional insured.

A. Commercial General Liability insurance shall be written on an occurrence basis and be a broad as ISO Form CG 00 01 with limits not less than $2,000,000 per occurrence and $2,000,000 in the aggregate for claims against bodily injury, personal and advertising injury, and property damage. Said policy shall include broad form Contractual Liability coverage and be endorsed to name the City of Santa Fe their officials, officers, employees, and agents as additional insureds.

B. Business Automobile Liability insurance for all owned, non-owned automobiles, with a combined single limit not less than $1,000,000 per accident.

C. Broader Coverage and Limits. The insurance requirements under this Contract shall be the greater of (1) the minimum coverage and limits specified in this Contract, or (2) the broader coverage and maximum limits of coverage of any insurance policy or proceeds available to the Named Insured. It is agreed that these insurance requirements shall not in any way act to reduce coverage that is broader or that includes higher limits than the minimums required herein. No representation is made that the minimum insurance requirements of this Contract are sufficient to cover the obligations of Contractor hereunder.

D. Contractor shall maintain the above insurance for the term of this Contract and name the City as an additional insured and provide for 30 days cancellation notice on any Certificate of Insurance form furnished by Contractor. Such certificate shall also specifically state the coverage provided under the policy is primary over any other valid and collectible insurance and provide a waiver of subrogation.

34. **Impracticality of Performance**

A party shall be excused from performance under this Contract for any period that the party is prevented from performing as a result of an act of God, strike, war, civil disturbance, epidemic, or court order, provided that the party has prudently and promptly acted to take any and all steps that are within the party's control to ensure performance. Subject to this provision, such non-performance shall not be deemed a default or a ground for termination.

35. **Invalid Term or Condition**

If any term or condition of this Contract shall be held invalid or unenforceable, the remainder of this Contract shall not be affected and shall be valid and enforceable.

36. **Enforcement of Contract**

A party's failure to require strict performance of any provision of this Contract shall not waive or diminish that party's right thereafter to demand strict compliance with that or any other provision. No waiver by a party of any of its rights under this Contract shall be effective unless express and in writing, and no effective waiver by a party of any of its rights shall be effective to waive any other rights.

37. **Patent, Copyright and Trade Secret Indemnification**

A. The Contractor shall defend, at its own expense, the City against any claim that any product or service provided under this Contract infringes any patent, copyright to trademark in the United States or Puerto Rico, and shall pay all costs, damages and attorneys' fees that a court finally awards as a result of any such claim. In addition, if any third party obtains a judgment against the City based upon Contractor's trade secret infringement relating to any product or services provided under this Contract, the Contractor agrees to reimburse the City for all costs, attorneys' fees and amount of the judgment. To qualify for such defense and or payment, the City shall:

1) give the Contractor prompt written notice within 48 hours of any claim;
2) allow the Contractor to control the defense of settlement of the claim; and
3) cooperate with the Contractor in a reasonable way to facilitate the defense or settlement of the claim.

B. If any product or service becomes, or in the Contractor's opinion is likely to become the subject of a claim of infringement, the Contractor shall at its option and expense:

1) provide the City the right to continue using the product or service and fully indemnify the City against all claims that may arise out of the City's use of the product or service;
2) replace or modify the product or service so that it becomes non-infringing; or,
3) accept the return of the product or service and refund an amount equal to the value of the returned product or service, less the unpaid portion of the purchase price and any other amounts, which are due to the Contractor. The Contractor's obligation will be void as to any product or service modified by the City to the extent such modification is the cause of the claim.

38. **Survival**

The Contract paragraphs titled "Patent, Copyright, Trademark, and Trade Secret Indemnification; Indemnification; and Limit of Liability" shall survive the expiration of this Contract. Software licenses, leases, maintenance and any other unexpired Agreements that were entered into under the terms and conditions of this Contract shall survive this Contract.

39. **Disclosure Regarding Responsibility**

A. Any prospective Contractor and any of its Principals who enter into a contract greater than sixty thousand dollars ($60,000.00) with any City for professional services, tangible personal property, services or construction agrees to disclose whether the Contractor, or any principal of the Contractor's company is presently debarred, suspended, proposed for debarment, or declared ineligible for award of contract by any federal entity, state agency or local public body.

B. Principal, for the purpose of this disclosure, means an officer, director, owner, partner, or a person having primary management or supervisory responsibilities within a business entity or related entities.

C. The Contractor shall provide immediate written notice to the City if, at any time during the term of this Contract, the Contractor learns that the Contractor's disclosure was at any time erroneous or became erroneous by reason of changed circumstances.

D. A disclosure that any of the items in this requirement exist will not necessarily result in termination of this Contract. However, the disclosure will be considered in the determination of the Contractor's responsibility and ability to perform under this Contract. Failure of the Contractor to furnish a disclosure or provide additional information as requested will be grounds for immediate termination of this Contract pursuant to the conditions set forth in Paragraph 7 of this Contract.

E. Nothing contained in the foregoing shall be construed to require establishment of a system of records in order to render, in good faith, the disclosure required by this document. The knowledge and information of a Contractor is not required to exceed that which is the normally possessed by a prudent person in the ordinary course of business dealings.

F. The disclosure requirement provided is a material representation of fact upon which reliance was placed when making an award and is a continuing material representation of the facts during the term of this Contract. If during the performance of the contract, the Contractor is indicted for or otherwise criminally or civilly charged by any government entity (federal, state or local) with commission of any offenses named in this document the Contractor must provide immediate written notice to the City. If it is later determined that the Contractor knowingly rendered an erroneous disclosure, in addition to other remedies available to the Government, the City may terminate the involved contract for cause. Still further the City may suspend or debar the Contractor from eligibility for future solicitations until such time as the matter is resolved to the satisfaction of the City.

40. **Suspension, Delay or Interruption of Work**

The City may, without cause, order the Contractor, in writing, to suspend, delay or interrupt the work in whole or in part for such period of time as the City may determine. The contract sum and contract time shall be adjusted for increases in cost and/or time associated with Contractor's compliance therewith. Upon receipt of such notice, Contractor shall leave the jobsite and any equipment in a safe condition prior to departing. Contractor must assert rights to additional compensation within thirty (30) days after suspension of work is lifted and return to work is authorized. Any compensation requested for which entitlement is granted and the contract sum adjusted, shall have profit included (for work completed) and for cost only (not profit) for Contractor costs incurred directly tied to the suspension itself and not otherwise covered by Contract remedy. Any change in Total Compensation must be reflected in an Amendment executed pursuant to Section 8 of this Contract.

41. **Notification**

Either party may give written notice to the other party in accordance with the terms of this Paragraph. Any written notice required or permitted to be given hereunder shall be deemed to have been given on the date of delivery if delivered by personal service or hand delivery or three (3) business days after being mailed.

To the City: Taylor Jurgens
City of Santa Fe Water Division

801 W San Mateo Rd
Santa Fe, NM 87505
trjurgens@santafenm.gov, 505-955-4265

To the Contractor: Carly Moore
Vertosoft, LLC
1602 Village Market Blvd SE, Suite 320
Leesburg, VA 20175
carly.moore@vertosoft.com, 540-998-8361

Either party may change its representative or address above by written notice to the other in accordance with the terms of this Paragraph. The carrier for mail delivery and notices shall be the agent of the sender.

42. **Succession**

This Contract shall extend to and be binding upon the successors and assigns of the parties.

IN WITNESS WHEREOF, the Parties have executed this Contract as of the date of the signature by the required approval authorities below.

CITY OF SANTA FE:

_____
MAYOR ALAN WEBBER

DATE:_____

CONTRACTOR: Vertosoft, LLC

H. Jay Colavita
_____
JAY COLAVITA, PRESIDENT & FOUNDER

DATE: Jan 7, 2025

NMBTIN#: _____

City of SF Business License #: _____

ATTEST:

_____
CITY CLERK

CITY ATTORNEY'S OFFICE:

Marcos Martinez
Marcos Martinez (Jan 7, 2025 16:17 MST)
_____
SENIOR ASSISTANT CITY ATTORNEY

APPROVED FOR FINANCES:

_____
FINANCE DIRECTOR

Statement of Work

City of Santa Fe, NM

Creation Date:10/29/2024
SoW Expiration Date: 12/31/2024
Document Number: PS-06275.5
Created by: Jennifer Nordin

Table of Contents

OpenGov Statement of Work 4
1. Project Scope 4
2. Adjustments to the Project Scope, Estimated Schedule, Charges and other Terms 4
3. Project Delivery 4
4. Project Understanding 5
5. OpenGov Project Management Responsibilities 5
6. Project Tracking and Reporting 5
7. Communication and Escalation Procedure 6
8. Opengov Implementation Methodology 7
8.1. Initiate 7
8.2. Validate 7
8.3. Configure 7
8.5. Launch 8
9 . Customer Responsibilities 8
10. Customer's Project Manager 8
11. Acceptance Procedure 9
12. Estimated Schedule 10
13. Illustrative Project Timelines 10
14. Change Order Process 10
Exhibit 1: Implementation Activities 12
Enterprise Asset Management Phase 1 12
Initiate 12
Validate 13
Configure 13
Train 16
Launch 20
Enterprise Asset Management Phase 2 20
Initiate 20
Validate 21
Configure 21
Train 23
Launch 26

OpenGov Statement of Work

This Statement of Work ("SOW") identifies services that OpenGov will perform for City of Santa Fe, NM ("Customer") pursuant to the order for OpenGov Professional Services. This SOW may not be modified or amended except in a written agreement signed by a duly authorized representative of each party. The OpenGov deliverables section of this document can be found in Exhibit 1: Implementation Activities. Any additional services or support not detailed in Exhibit 1 will be considered out of scope.

1. Project Scope

   Under this project, OpenGov will deliver cloud based solutions (detailed list in "Exhibit 1"). OpenGov's estimated charges and schedule are based on performance of the activities listed in the "OpenGov Responsibilities" section below. Deviations that arise during the project will be managed through the procedure described in Section 14.

2. Adjustments to the Project Scope, Estimated Schedule, Charges and other Terms

   Adjustments to the deliverables in Exhibit 1 may include charges on a time-and-materials or fixed-fee basis using OpenGov's standard rates.

3. Project Delivery

   3.1. OpenGov will perform the work under this SOW remotely unless explicitly identified below.

   3.1.1. OpenGov will provide four (4) onsite trips for project-related activity which OpenGov determines would be best performed at the Customer's facility. One OpenGov resource will attend each onsite trip. Customer's facility must contain a conference room to accommodate the number of attendees, non-public wifi connection, and AV equipment for projecting OpenGov software on a screen visible to all participants.

   3.1.2. The Customer is responsible for paying travel expenses as incurred on a quarterly basis. It is estimated that the travel expenses will not exceed $10,400. Written approval is required for any expenses above the estimate.

   3.2. OpenGov will use personnel and resources located across the United States, and may also include OpenGov-trained implementation partners to support the delivery of services.

4. Project Understanding

4.1. Deviations that arise during the proposed project will be managed through the Change Order Process (as defined in Section 14), and may result in adjustments to the Project Scope, Estimated Schedule, Charges, and/or other terms.
4.2. The OpenGov Suites are not customized beyond current capacities based on the latest release of the software. Implementation of any custom modification or integration developed by OpenGov; Customer internal staff; or any third-party is not included in the scope of this project unless specifically listed in Exhibit 1.
4.3. Customer is responsible for providing appropriate time and resources to the project to meet deliverables as outlined in the project plan.
4.4. Data conversion services from other software system(s) or sources are not included in the scope of this project unless specifically listed in Exhibit 1.

5. OpenGov Project Management Responsibilities

5.1. OpenGov will provide project management for the OpenGov deliverables in this SOW. This provides direction to OpenGov project personnel and a shared framework for project planning, communications, reporting, procedural and contractual activity.

5.2. OpenGov will review the Project Plan with Customer's Project Manager and key stakeholders to ensure alignment on agreed upon timelines.

5.3. OpenGov will maintain project communications through Customer's Project Manager.

5.4. OpenGov will establish documentation and procedural standards for deliverable materials.

5.5. OpenGov will assist Customer's Project Manager to prepare and maintain the Project Plan for the performance of this SOW which will include the activities, tasks, assignments, and project milestones identified in Exhibit 1.

6. Project Tracking and Reporting

6.1. OpenGov will review project tasks, schedules, and resources and make changes or additions, as appropriate. OpenGov will measure and evaluate progress against the Project Plan with Customer's Project Manager.

6.2. OpenGov will work with Customer's Project Manager to address and resolve deviations from the Project Plan.

6.3. OpenGov will conduct regularly scheduled project status meetings.

6.4. OpenGov will administer the Change Order Process with the Customer's Project Manager.

6.5. Deliverable Materials:

6.5.1. Weekly status reports
6.5.2. Project Plan
6.5.3. Project Charter, defining project plan and Go-live date
6.5.4. Risk, Action, Issues and Decisions Register (RAID)

6.6. Deliverable Sign-Off: OpenGov requests Sign-Offs at various deliverables during the implementation of the project. Once the Customer has signed-off on a deliverable, any additional changes requested by Customer on that deliverable will require a paid change order for additional hours for OpenGov to complete the requested changes.

7. Communication and Escalation Procedure

7.1. Active engagement throughout the implementation process is the foundation of a successful deployment. To help assess progress, address questions, and minimize risk during the course of deployment, both parties agree to the following:

7.1.1. Regular communication aligned to the agreed upon Project Plan and timing.
7.1.2. OpenGov expects our customers to raise questions or concerns as soon as they arise. OpenGov will do the same, in order to be able to address items when known.

7.2. Escalation Process

7.2.1. Identification of an issue impeding deployment progress or, outcome, that is not acceptable.
7.2.2. Customer or OpenGov Project Manager summarizes the problem statement and impasse.
7.2.3. Customer and OpenGov Project Managers jointly outline solution acceptance and OpenGov Project Manager will schedule an Executive Review Meeting, if necessary.
7.2.4. Resolution will be documented and signed off.

8. Opengov Implementation Methodology

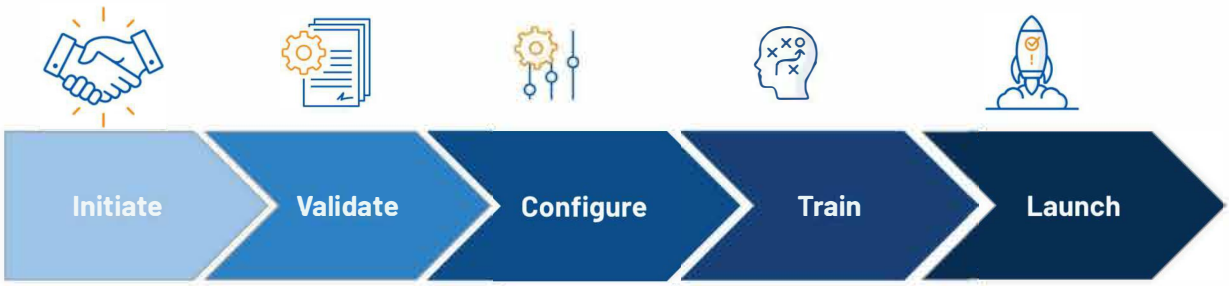

Every OpenGov implementation will contain a structured methodology to properly plan and collaborate. The methodology consists of the following phases:

- Initiate
- Validate
- Configure
- Train
- Launch

8.1. Initiate

8.1.1. OpenGov will provide customer entity configuration.
8.1.2. OpenGov will provide system administrators creation and project plan creation.
8.1.3. This activity is complete when Customer has access to their site.
8.1.4 Project plan will be finalized
8.1.5. Customer will sign-off on product access to complete the Initiate Phase of the project.

8.2. Validate

8.2.1. OpenGov will create a Solution Blueprint.
8.2.2. OpenGov will confirm the Data Validation strategy.
8.2.3. This activity is complete when the Solution Blueprint is presented to Customer.
8.2.4. Customer will Sign-off on Initial Draft Solution Blueprint to complete the Validate Phase of the project.

8.3. Configure

8.3.1. OpenGov will configure the deliverables outlined in Exhibit 1.
8.3.2. This activity is complete when all deliverables in Exhibit 1 are configured.
8.3.3. OpenGov will allow Customer to request modifications to the configuration if Customer identifies necessary changes during solution testing and training tasks in line with the implementation activities noted in Exhibit 1.
8.3.4. Customer will provide Sign-off that all configuration deliverables have been completed and accepted. OpenGov will provide status and intermediate completion milestones as the project progresses to fully configured.

8.4. Train

8.4.1. Training will be provided in instructor-led virtual sessions unless otherwise specified in Exhibit 1.
8.4.2. OpenGov will provide Administrator training.
8.4.3. Customer will Sign-off that training has been completed.

8.5. Launch

8.5.1. OpenGov will provide HyperAdopt support post Go-Live to ensure successful adoption.

8.5.2. Customer will Sign-off on the HyperAdopt phase of the project which will transition the project from active deployment to Customer Success.

9 . Customer Responsibilities

9.1. The completion of the proposed scope of work depends on the full commitment and participation of Customer's management and personnel. The Customer's Project Manager should have access to the appropriate Customer Subject Matter Expert personnel needed for the successful implementation of the project. The responsibilities listed in this section are in addition to the responsibilities specified in the Agreement and are to be provided at no charge to OpenGov. OpenGov's performance is predicated upon the following responsibilities being managed and fulfilled by Customer. Delays in performance of these responsibilities may result in a change order and/or delay of the completion of the project.

9.2. Provide the required data to OpenGov within ten (10) business days of the requests being made from the OpenGov Project Manager. The Customer will be responsible for any potential charges from third parties to access and provide the data.

9.3. Maintain the same format and access to data on an ongoing basis. Any changes to the underlying data or data source may require a change order or charge in the future.

10. Customer's Project Manager

10.1. Create, with OpenGov's assistance, the Project Charter for the performance of this SOW which will include the activities, tasks, assignments, milestones and estimates.

10.2. Manage Customer personnel and responsibilities for this project (for example: ensure personnel complete any self-paced training sessions, configuration, validation or user acceptance testing).

10.3. Identify and assign Subject Matter Experts (SME).

10.4. Serve as the communication liaison between OpenGov and Customer representatives participating in the project.

10.5. Participate in project status meetings.

10.6. Help obtain and provide information, data, and decisions within ten (10) business days of OpenGov's request unless Customer and OpenGov agree in writing to a different response time.

10.7. Resolve deviations from the estimated schedule.

10.8. Administer the Change Order Process with the Project Manager, if applicable.

11. Acceptance Procedure

11.1. The completed items in Exhibit 1 will be submitted to the Customer's Project Manager.

11.2. Customer's Project Manager will have decision authority to approve/reject all Project Criteria, Phase Acceptance and Engagement Acceptance.

11.3. Within ten (10) business days of receipt, the Customer's Project Manager will either accept the Deliverable Material or provide OpenGov's Project Manager a written list of requested revisions. If OpenGov receives no response from the Customer's Project Manager within ten (10) business days, then the Deliverable Material will be deemed accepted. The process will repeat for the requested revisions until acceptance.

11.4. All acceptance milestones and associated review periods will be tracked on the Project Plan.

11.5 Both OpenGov and Customer recognize that failure to complete tasks and respond to open issues may have a negative impact on the Project.

11.6. For any tasks not yet complete, OpenGov and/or Customer will provide sufficient resources to expedite completion of tasks to prevent negatively impacting the Project.

11.7. Excluding delays caused by a force majeure event, if OpenGov in good faith reasonably determines that Customer's personnel or contractors are not completing Customer's responsibilities described in the applicable SOW timely or accurately and cannot agree to a mutually developed schedule to do so, OpenGov may place the Professional Services on hold after providing a minimum of ten (10) days written notice to Customer. If OpenGov places a Customer on hold, OpenGov will ensure that Customer is made aware of its obligations necessary for OpenGov to continue performing the Professional Services in the on hold notice. Upon placing a customer on hold, OpenGov may, without penalty, suspend Professional Services to the Customer and reallocate resources until the Customer has fulfilled its obligations. OpenGov shall bear no liability or otherwise be responsible for delays in the provision of the Professional Services occasioned by Customer's failure to complete Customer's responsibilities.

12. Estimated Schedule

12.1. OpenGov will schedule resources after the signature of the order form is received. Unless specifically noted, the OpenGov assigned Project Manager will work with Customer Project Manager to develop the Project Charter for all requested deliverables under this SOW. OpenGov and Customer reserve the right to adjust the schedule based on the availability of OpenGov resources and/or Customer resources, and the timeliness of deliverables provided by each party. Notwithstanding the foregoing, changes are subject to the execution of a Change Order per section 14 of this SOW.

12.2. The Services are currently estimated to start within two (2) weeks but no later than four (4) weeks from signatures on Order Forms.

13. Illustrative Project Timelines

13.1. The typical project timelines are for illustrative purposes only and may not reflect Customer's use cases. The order of delivery of the suite(s) will be determined during the project planning activities in the Initiate Phase (8.1).

Phase 1	Deliverable	Month 1	Month 2	Month 3	Month 4	Month 5	Month 6	Month 7	Month 8
Initiate	Project Preparation and Kick Off								
Validate	Requirements Gathering, Project Workbook								
Configure	Test conversion, Test integration, Start Up Data upload, GIS integrations								
Train	Train the Trainer, Advanced trainings, Weekly Q&A								
Launch	Go Live Readiness, Production Cut over, Go Live Support, Project Closure								
Customer is responsible for attending the kick off of each phase, providing any necessary data for each phase, participating in working sessions during active phases, and signing off on deliverables at the end of each phase.									

Phase 2	Deliverable	Month 9	Month 10	Month 11	Month 12	Month 13	Month 14	Month 15	Month 16
Initiate	Project Preparation and Kick Off								
Validate	Requirements Gathering, Project Workbook								
Configure	Test conversion, Test integration, Start Up Data upload, GIS integrations								
Train	Train the Trainer, Advanced trainings, Weekly Q&A								
Launch	Go Live Readiness, Production Cut over, Go Live Support, Project Closure								
Customer is responsible for attending the kick off of each phase, providing any necessary data for each phase, participating in working sessions during active phases, and signing off on deliverables at the end of each phase.									

14. Change Order Process

14.1. This SOW and related efforts are based on the information provided and gathered by OpenGov. Customer acknowledges that changes to the scope may require additional effort or time, resulting in additional cost. Any change to scope must be agreed to in writing, by both Customer and OpenGov, and documented as such via a Change Order. No verbal agreement will be binding on OpenGov or Customer.

14.2. A Change Order is defined as work that is added to or deleted from the original scope of this SOW. Depending on the magnitude of the change, it may or may not alter the original contract amount or completion date. Changes might include but are not limited to:

- 14.2.1. Timeline for completion
- 14.2.2. Sign off process
- 14.2.3. Cost of change and/or invoice timing
- 14.2.4. Amending the SOW to correct an error
- 14.2.5 Extension of work as the complexity identified exceeds what was expected by Customer or OpenGov
- 14.2.6. Change in type of OpenGov resources to support the SOW

14.3.The approval process for a Change Order is as follows:

- 14.3.1.Identification and documentation of a need for modification to the scope of the project as defined in the Statement of Work and any subsequent change orders.

14.3.2. A Change Order is created and Customer and OpenGov review. The Customer will then provide Sign-off.
14.3.3. Change Order is incorporated into the Statement of Work and implemented.

Exhibit 1: Implementation Activities

Enterprise Asset Management Phase 1

Use Cases Build for Enterprise Asset Management:

- Water Distribution
- Water Treatment
- Wastewater Treatment
- Wastewater Collection / Sanitary Sewer

Initiate

OpenGov will:

- Setup a hosted, sandbox and production OpenGov Asset Management environment.
- Provide an overview, up to two (2) hours, of OpenGov and ArcGIS Online user-based logins and User/Role functionality.
- Provide a template file to be utilized by Customer staff to populate Roles and Users to be utilized for OpenGov Asset Management.
- Utilize the template to create users and roles in OpenGov Asset Management. (Note: Subsequent User and/or Role changes will be Customer administrator's responsibility.)
- Provide documentation and guidance, up to four (4) hours, for Customer technical GIS staff to configure Esri Basemap Services for OpenGov Asset Management integration. Guidance will be geared towards OpenGov Asset Management/Esri integration functionality and requirements.
- Setup the OpenGov Asset Management Platform, including the Request, Work, Resource, and Asset Management areas of the software. *Asset Management solutions will be setup for all solutions referenced in the Assets (Configure) section of the scope unless otherwise noted.*
- Implement identity provider initiated SSO for Microsoft ADFS, Microsoft Azure AD, or Okta.

OpenGov Assumptions:

- OpenGov assumes that the customer is responsible for performing quality control measures on its data in EAM.

Completion Criteria:

- Customer confirms access to site.
- Customer receives import templates to complete.
- Customer receives GIS documentation and guidance.

Validate

OpenGov will:

- Provide a three-day (3-day) onsite requirement gathering workshop to increase our understanding of Customer business and functional goals. Through workshops and interviews, OpenGov will identify best fit scenarios for OpenGov Asset Management and provide a brief including any challenges as well as recommendations for OpenGov Asset Management best practices relevant to Customer implementation.

Completion Criteria:

- Customer receives the brief following the onsite Requirements Gathering workshop.

Configure

Configurations

OpenGov will:

- Provide configuration services, including:
    - Up to ten (10) custom fields and up to two (2) custom layouts per asset type listed in the Assets section below
    - Up to thirty (30) custom fields and up to ten (10) custom layouts to be utilized in any of the shared areas of the system, such as Tasks
    - Up to twenty (20) automations
    - Up to twenty (20) preventative maintenance plans

Data Services

OpenGov will:

- Provide one sandbox and one production data load service through standard import/export functionality. OpenGov will provide template documents for data population. Once populated by Customer staff, OpenGov will load the data into Customer sandbox or production OpenGov Asset Management environment. Data loads may include data such as:
    - Parent level asset records
    - Asset location (spatial x/y) attributes
    - Parent level resource (Labor, Equipment Material, Vendor) records
    - Resource Rate (Labor, Equipment, Material) records
    - Standard system libraries

- Provide service for Customer historical data listed below:
    - Maintenance Connection data related to: assets, work history, total cost history.
    - For the custom data conversion service(s) listed above, OpenGov will provide:
        - A review of the historical data along with recommendations for OpenGov Asset Management best fit.

        - A field map workshop, which will identify where and how historical data will appear within OpenGov Asset Management
        - A test conversion service to facilitate data conversion validation and testing
        - One revision of the field map used for the test conversion service
        - A production conversion service utilizing the final, approved field map
    - All data must be accessible to OpenGov from a SQL DB, SQL View, Access DB or Comma Delimited Files.
    - Maximum historical record count:
        - Requests : 150,000
        - Tasks: 1,000,000
        - Overall Asset count: 2,000,000
    - Exclusions:
        - Child records and associated child-level attributes, non-asset tasks, condition inspection history, request history, attachments, and resources.

- Provide service for Customer historical data listed below:
    - AllMax Antero data related to: assets, work history, total cost history.
    - For the custom data conversion service(s) listed above, OpenGov will provide:
        - A review of the historical data along with recommendations for OpenGov Asset Management best fit.
        - A field map workshop, which will identify where and how historical data will appear within OpenGov Asset Management
        - A test conversion service to facilitate data conversion validation and testing
        - One revision of the field map used for the test conversion service
        - A production conversion service utilizing the final, approved field map
    - All data must be accessible to OpenGov from a SQL DB, SQL View, Access DB or Comma Delimited Files.
    - Maximum historical record count:
        - Requests : 150,000
        - Tasks: 1,000,000
        - Overall Asset count: 2,000,000
    - Exclusions:
        - Child records and associated child-level attributes, non-asset tasks, condition inspection history, request history, attachments, and resources.

Integrations

OpenGov will

- Provide the following standard, uni-directional (one-way) integration service between SCADA and OpenGov. The standard integration includes the following:
    - OpenGov will provide the following integration points (one or both of the following):

        - Retrieve specified alarm logs and trigger a Task creation upon receipt of a new log entry.
        - Retrieve specified asset usage log data, and associate logs to the corresponding asset to support standard Enterprise Asset Management preventative maintenance trigger and scheduling functionality.
    - OpenGov will provide an error logging capability to easily identify potential integration issues.
    - OpenGov will provide a customer-configurable time interval to manage integration frequency.
- Assumptions
    - The integration will include up to 12 fields (in the same OpenGov recordset)
    - Customer staff will be responsible for populating required Tag values utilized to support integration triggers.
    - All data must be accessible to the OpenGov service from a SQL DB, SQL View, Comma Delimited File
    - Customer will be responsible for configuring automated exports from system
    - OpenGov will install an agent (software executable) on the customer's server where the system export resides to upload data to OpenGov.
    - Customers server must have access to the internet
    - The customer will be responsible for creating separate export files for different asset types. If there are multiple asset types, they cannot all be in one file.

Assets

OpenGov will:

- Provide installation and training on the following asset types:
    - Water Distribution (9)
        - Water Backflow; Water Facility; Water Hydrant; Water Lateral; Water Main; Water Meter; Water Pump; Water Valve; Water Storage Tank
    - Water Treatment Plant (34)
        - Water Treatment Plant; Water Treatment Plant Blowers; Water Treatment Plant Compressors; Water Treatment Plant Electrical Generator; Water Treatment Plant Facility; Water Treatment Plant HVAC Equipment; Water Treatment Plant Instrumentation; Water Treatment Plant Motors; Water Treatment Plant Processes; Water Treatment Plant Pump; Water Treatment Plant Screens; Water Treatment Plant Structure; Water Treatment Plant UV; Water Treatment Plant Valves; Water Treatment Plant Floor; Basement Construction; Conveying; Exterior Enclosures; Facility Electrical; Facility Equipment; Fire Protection; Foundations; Furnishings; Interior Construction; Interior Finishes; Plumbing; Roofing; Site Mechanical Issues; Special Construction; Stairs; Superstructure; Selective Building Demolition; Site Preparation; Site Improvement; Other Site Construction

- Wastewater Treatment Plant (36)
  - Wastewater Treatment Plant Blowers; Wastewater Treatment Plant Compressors; Wastewater Treatment Plant Conveyors; Wastewater Treatment Plant Electrical Generator; Wastewater Treatment Plant Facility; Wastewater Treatment Plant HVAC Equipment; Wastewater Treatment Plant Instrumentation; Wastewater Treatment Plant Motors; Wastewater Treatment Plant Presses; Wastewater Treatment Plant Processes; Wastewater Treatment Plant Pump; Wastewater Treatment Plant Screens; Wastewater Treatment Plant Structure; Wastewater Treatment Plant UV; Wastewater Treatment Plant Valves; Wastewater Treatment Plants; Wastewater Treatment Plant Floor; Basement Construction; Conveying; Exterior Enclosures; Facility Electrical; Facility Equipment; Fire Protection; Foundations; Furnishings; Interior Construction; Interior Finishes; Plumbing; Roofing; Site Mechanical Issues; Special Construction; Stairs; Superstructure; Selective Building Demolition; Site Preparation; Site Improvement; Other Site Construction
- Wastewater Collection / Sanitary Sewer (7)
  - Sewer Cleanout; Sewer Facility; Sewer Force Main; Sewer Lateral; Sewer Main; Sewer Manhole; Sewer Pump
- Up to five (5) Custom Asset Type(s) to be determined during Requirements Gathering.

Completion Criteria

- Customer confirm configurations meet expectations through testing and sign off following the train the trainer event.
- Customer confirms historical data records are accurate through testing and sign off following the trainer event.

- Customer confirms SCADA integration is configured through testing and sign off following the trainer event.

Train

Foundational Training

- Provide remote train-the-trainer training, up to two (2) hours, on overall system navigation and functionality to help familiarize Customer staff with the software environment and its common functions. Training topics include:
  - Dashboards
  - Standard KPI/ROI Gadgets
  - Logins/Permission
  - Layers
  - Filters
  - Maps
  - Grids
  - System Navigation

- Views (List & Detail)
- Standard Reports
- Attachments
- Requests, Work, Assets, Resources, Reports, and Administrator Tabs

- Provide remote train-the-trainer training, up to one (1) hour, for an overview of Preventative Maintenance Plans.

- Provide remote train-the-trainer training, up to one (1) hour, for an overview of Asset Condition Manager and Advanced Inspections.

- Provide remote train-the-trainer training, up to two (2) hours, for an overview of Reporting.

- Provide remote train-the-trainer training, up to two (2) hours, on OpenGov Asset Management Esri integration functionality. Training topics include:
  - OpenGov Asset Management Esri integration configuration options
  - Integration functionality (basemap and feature)
  - Overall Esri integration requirements, considerations, and OpenGov recommended best practices

- Provide remote train-the-trainer training, up to two (2) hours, on OpenGov Asset Builder. Training topics include:
  - OpenGov Asset Management Administrator
    - Structure Manager
    - Library Manager
    - Layout Manager
    - User/Role Configurations
  - OpenGov recommended best practices for expanding the system's use and/or building assets

Train the Trainer Training Event

- Provide a three-day (3-day) onsite "train-the-trainer" training event. The training agenda will be defined and agreed upon by both OpenGov and Customer project manager. To avoid redundancy, and to utilize service time efficiently, training may cover a subset of the assets listed in the Asset section of the scope. Topics may include any of the following:
  - Request Management:
    - Requests
    - Requesters
    - Task Creation from Requests
    - Issue library (including settings such as Applies to Asset and Non-Location)
    - OpenGov recommended best practices for Request and Requester Management
  - Work Management:

        - Create Task(s) (Asset/Non-Asset)
        - Assignments (Add, Edit, Remove)
        - Task Menu Actions
        - Related Work Items
        - Create Work Order
        - Close Work Order
        - Associate Task to WO
        - Repeat Work Orders
        - Work Order Menu Actions
        - Enter Resources
        - Timesheets
        - Activity library (including settings such as Applies to Asset, Inspection, Key Dates, Cost, and Productivity)
        - OpenGov recommended best practices for Work Management
    - Asset Management:
        - Asset Details
        - Asset Creation/Retirement (if assets are GIS integrated, the Cartegraph Asset Management will have to log in with an Esri Identity in order to create assets.)
        - Preventative Maintenance Plans
        - Inspections
        - Linked assets (if applicable)
        - Container/Component Relationships (if applicable)
        - OpenGov recommended best practices for Asset Management
    - Resource Management:
        - Resource Details
        - Labor/Equipment Rates
        - Material Management (Stock, Usage, Adjustments)
        - Vendor Price Quotes
        - OpenGov recommended best practices for Resource Management
    - OpenGov Mobile:
        - Overall system functionality (Navigation, Interface, Maps, Attachments, Sorting)
        - Work Management
            - Create and Update Tasks (Asset/Non-Asset)
            - Assign Tasks
            - Enter Resources
            - Inspections
        - Asset Management
            - Create and Update Assets
        - Request Management
            - View and Update Requests
            - View Requester information
            - Create Task from Request
        - OpenGov recommended best practices for mobile device use
    - Administrator:

- Administrator:
    - User Administration, Role Administration, Asset Administration, Record Filter Administration, Import/Export, Scheduled Process Log, Error Log
- Settings:
    - System Settings, Map Administration, Geocode Settings, GIS Integration settings, Asset Color Manager
- Manager:
    - Layout Manager, Library Manager, Preventative Maintenance, Asset Condition Manager, Notification Manager, Structure Manager, Automation
    - Manager

Core Training:

- Provide Preventative Maintenance Plans remote train-the-trainer training, up to three (3) hours. Training topics include:
    - Preventative Maintenance
    - OpenGov recommended best practices for proactive asset management
- Provide Advanced Inspections, Asset Condition Manager, and Asset Risk remote train-the-trainer training, up to four (4) hours. Training topics include:
    - Performance Management
        - Prediction Groups
        - Minimum Condition Groups
        - Activities and Impacts
        - Criticality Factor
        - Install/Replaced Dates
    - Business Risk Exposure
        - Risk
        - Consequence of Failure
        - Probability of Failure
    - OpenGov recommended best practices for Asset Risk Functionality , advanced inspections and condition management
- Provide Advanced Material Management and Material Planning remote train-the-trainer training, up to four (4) hours. Training topics include:
    - Material Locations
    - Material Transfers
    - Material Orders
    - Settings:
        - Vendor Price Quotes
        - Re-order points
    - Material Planning
        - Status Default
        - Workflow Setup

    - Notifications
- OpenGov recommended best practices for advanced material management and Material Planning.

Completion Criteria
- Remote training sessions have been recorded and provided.
- Onsite training session has been conducted.

Launch

OpenGov will:
- Provide a remote, up to eight (8) hours, web conferences, to be utilized for Go-Live Support. The agenda will be defined, and agreed upon, by both Customer and OpenGov's project managers. Topics may include any of the following:
    - Refresher training for items listed in the scope of work
    - Software and process support for staff during production roll out
    - Field, Layout, and Report configuration guidance, if applicable

Completion Criteria:
- Move to production is completed.
- Go Live Support has been conducted.
- Customer sign off is obtained.

Enterprise Asset Management Phase 2

Use Cases Build for Enterprise Asset Management:

- Transportation
- Parks and Rec
- Stormwater
- Walkability

Initiate

OpenGov will:
- Setup a hosted, sandbox and production OpenGov Asset Management environment.
- Provide an overview, up to two (2) hours, of OpenGov and ArcGIS Online user-based logins and User/Role functionality.
- Provide a template file to be utilized by Customer staff to populate Roles and Users to be utilized for OpenGov Asset Management.
- Utilize the template to create users and roles in OpenGov Asset Management. (Note: Subsequent User and/or Role changes will be Customer administrator's responsibility.)

- Provide documentation and guidance, up to four (4) hours, for Customer technical GIS staff to configure Esri Basemap Services for OpenGov Asset Management integration. Guidance will be geared towards OpenGov Asset Management/Esri integration functionality and requirements.
- Setup the OpenGov Asset Management Platform, including the Request, Work, Resource, and Asset Management areas of the software. *Asset Management solutions will be setup for all solutions referenced in the Assets section of the scope unless otherwise noted.*
- Implement identity provider initiated SSO for Microsoft ADFS, Microsoft Azure AD, or Okta.

OpenGov Assumptions:

- OpenGov assumes that the customer is responsible for performing quality control measures on its data in EAM.

Completion Criteria:

- Project kicked off with an initial project timeline delivered.

Validate

OpenGov will:

- Provide a three-day (3-day) onsite requirement gathering workshop to increase our understanding of Customer business and functional goals. Through workshops and interviews, OpenGov will identify best fit scenarios for OpenGov Asset Management and provide a brief including any challenges as well as recommendations for OpenGov Asset Management best practices relevant to Customer implementation.

Completion Criteria:

- Completion of requirements gathering workshop.

Configure

Configurations

OpenGov will:

- Provide configuration services, including:
  - Up to ten (10) custom fields and up to two (2) custom layouts per asset type listed in the Assets section below
  - Up to thirty (30) custom fields and up to ten (10) custom layouts to be utilized in any of the shared areas of the system, such as Tasks
  - Up to twenty (20) automations
  - Up to twenty (20) preventative maintenance plans
- Provide configuration services related to MS4 workflows, including:
  - Up to forty (40) custom fields and up to two (2) custom layouts to be utilized for MS4 inspections
  - Up to ten (10) automations
  - Up to five (5) reports to be defined during requirements gathering

OpenGov Assumptions:

- Implementation of any custom modification developed by OpenGov; your internal staff; or any third-party is not included in the scope of this project unless specifically listed above.

Data Services

OpenGov will:

- Provide one sandbox and one production data load service through standard import/export functionality. OpenGov will provide template documents for data population. Once populated by Customer staff, OpenGov will load the data into Customer sandbox or production OpenGov Asset Management environment. Data loads may include data such as:
    - Parent level asset records
    - Asset location (spatial x/y) attributes
    - Parent level resource (Labor, Equipment Material, Vendor) records
    - Resource Rate (Labor, Equipment, Material) records
    - Standard system libraries

OpenGov Assumptions:

- OpenGov assumes that the customer is responsible for performing quality control measures on its data in EAM.
- Data conversion services from other software system(s) or sources (including Navigator databases) are not included in the scope of this project unless specifically listed above.

Assets

OpenGov will:

- Provide installation and training on the following asset types:
    - Transportation (8)
        - Bridge; Light Fixture; Pavement; Sign; Guardrail; Marking; Pavement Area; Support
    - Parks and Recreation (10)
        - Athletic Space; Fence; Park; Park Structure; Playground Equipment; Bench; Landscape Area; Park Amenity; Playground; Tree
    - Stormwater (9)
        - Storm Basin; Storm Channel; Storm Culvert; Storm Facility; Storm Inlet; Storm Manhole; Storm Outlet; Storm Pipe; Storm Pump
    - Walkability (7)
        - ADA Ramp; Pavement Area: Sign; Tree; Light Fixture; Sidewalk; Support
    - Up to ten (10) Custom Asset Type(s) to be determined during Requirements Gathering.

Completion Criteria:

- Customer sign-off on ability to login and access to the sandbox.

Train

Foundational Training

- Provide remote train-the-trainer training, up to two (2) hours, on overall system navigation and functionality to help familiarize Customer staff with the software environment and its common functions. Training topics include:
    - Dashboards
    - Standard KPI/ROI Gadgets
    - Logins/Permission
    - Layers
    - Filters
    - Maps
    - Grids
    - System Navigation
    - Views (List & Detail)
    - Standard Reports
    - Attachments
    - Requests, Work, Assets, Resources, Reports, and Administrator Tabs

- Provide remote train-the-trainer training, up to one (1) hour, for an overview of Preventative Maintenance Plans.

- Provide remote train-the-trainer training, up to one (1) hour, for an overview of Asset Condition Manager and Advanced Inspections.

- Provide remote train-the-trainer training, up to two (2) hours, for an overview of Reporting.

- Provide remote train-the-trainer training, up to two (2) hours, on OpenGov Asset Management Esri integration functionality. Training topics include:
    - OpenGov Asset Management Esri integration configuration options
    - Integration functionality (basemap and feature)
    - Overall Esri integration requirements, considerations, and OpenGov recommended best practices

- Provide remote train-the-trainer training, up to two (2) hours, on OpenGov Asset Builder. Training topics include:
    - OpenGov Asset Management Administrator
        - Structure Manager
        - Library Manager
        - Layout Manager
        - User/Role Configurations

- OpenGov recommended best practices for expanding the system's use and/or building assets

OpenGov assumptions:

- OpenGov assumes that the customer is responsible for testing its workflows, automations, integrations, and configurations within the EAM and will update the configurations as part of its testing and training activities.

Train the Trainer Training Event

- Provide a three-day (3-day) onsite "train-the-trainer" training event. The training agenda will be defined and agreed upon by both OpenGov and Customer project manager. To avoid redundancy, and to utilize service time efficiently, training may cover a subset of the assets listed in the Asset section of the scope. Topics may include any of the following:
  - Request Management:
    - Requests
    - Requesters
    - Task Creation from Requests
    - Issue library (including settings such as Applies to Asset and Non-Location)
    - OpenGov recommended best practices for Request and Requester Management
  - Work Management:
    - Create Task(s) (Asset/Non-Asset)
    - Assignments (Add, Edit, Remove)
    - Task Menu Actions
    - Related Work Items
    - Create Work Order
    - Associate Task to WO
    - Repeat Work Orders
    - Work Order Menu Actions
    - Enter Resources
    - Timesheets
    - Activity library (including settings such as Applies to Asset, Inspection, Key Dates, Cost, and Productivity)
    - OpenGov recommended best practices for Work Management
  - Asset Management:
    - Asset Details
    - Preventative Maintenance Plans
    - Inspections
    - Linked assets (if applicable)
    - Container/Component Relationships (if applicable)
    - OpenGov recommended best practices for Asset Management
  - Resource Management:
    - Resource Details
    - Labor/Equipment Rates
    - Material Management (Stock, Usage, Adjustments)

        - Vendor Price Quotes
        - OpenGov recommended best practices for Resource Management
    - OpenGov Mobile:
        - Overall system functionality (Navigation, Interface, Maps, Attachments, Sorting)
        - Work Management
            - Create and Update Tasks (Asset/Non-Asset)
            - Assign Tasks
            - Enter Resources
            - Inspections
        - Asset Management
            - Create and Update Assets
        - Request Management
            - View and Update Requests
            - View Requester information
            - Create Task from Request
        - OpenGov recommended best practices for mobile device use
    - Administrator:
        - Administrator:
            - User Administration, Role Administration, Asset Administration, Record Filter Administration, Import/Export, Scheduled Process Log, Error Log
        - Settings:
            - System Settings, Map Administration, Geocode Settings, GIS Integration settings, Asset Color Manager
        - Manager:
            - Layout Manager, Library Manager, Preventative Maintenance, Asset Condition Manager, Notification Manager, Structure Manager, Automation
            - Manager

Core Training:

- Provide Preventative Maintenance Plans remote train-the-trainer training, up to three (3) hours. Training topics include:
    - Preventative Maintenance
    - OpenGov recommended best practices for proactive asset management
- Provide Advanced Inspections, Asset Condition Manager, and Asset Risk remote train-the-trainer training, up to four (4) hours. Training topics include:
    - Performance Management
        - Prediction Groups
        - Minimum Condition Groups
        - Activities and Impacts
        - Criticality Factor
        - Install/Replaced Dates
    - Business Risk Exposure

        - Risk
        - Consequence of Failure
        - Probability of Failure
    - OpenGov recommended best practices for Asset Risk Functionality , advanced inspections and condition management

Completion Criteria

- Core Training and train-the-trainer has been conducted.

Launch

OpenGov will:

- Provide a remote, up to eight (8) hours, web conferences, to be utilized for Go-Live Support. The agenda will be defined, and agreed upon, by both Customer and OpenGov's project managers. Topics may include any of the following:
    - Refresher training for items listed in the scope of work
    - Software and process support for staff during production roll out
    - Field, Layout, and Report configuration guidance, if applicable

Completion Criteria:

- Go Live Support has been conducted.

1602 Village Market Blvd SE, Suite 320
Leesburg, VA20175 USA

Cage Code: 7QV38
UEI Number Y7D5MXRU2839
DUNS# 080431574
Federal Tax ID: 81-3911287
Business Size: Small Business

Date: 12/30/2024, 1:17 PM

Phone: 571 707-4130
Fax: 571-291-4119
Email: sales@vertosoft.com

Vertosoft Contact: Carly Moore
Phone: (540) 998-8361
Email: carly.moore@vertosoft.com

OpenGov Quote for City of Santa Fe, NM

Contract: GSA: GS-35F-688GA

Quote #: Q-09500
Expires On: 1/31/2025

Ship To
City of Santa Fe, NM
Taylor Jurgens
trjurgens@santafenm.gov

Quote For:
Name: Taylor Jurgens
Company: City of Santa Fe, NM
Email: trjurgens@santafenm.gov
Phone:

PAYMENT TERMS	DELIVERY METHOD	PAYMENT METHOD	VERTOSOFT CUST ID	SUPPLIER REF #
2%/15, NET 30	Electronic	Check/ACH/Credit Card		

Overall POP Start Date: 2/15/2025
Overall POP End Date: 2/14/2026

Term 1 02/15/2025-02/14/2026

PART #	DESCRIPTION	QTY	UNIT PRICE	EXTENDED
OG-TWAQ-B300500M-AR-1Y	Asset Management - Between $300-500 Million - 1Y	2.00	$36,640.92	$73,281.84
OG-TWAZ-B300500M-AR-1Y	Sanitary Sewer Domain - Between $300-500 Million - 1Y	4.00	$6,187.67	$24,750.68
OG-TWBE-B300500M-AR-1Y	Wastewater Treatment Domain - Between $300-500 Million - 1Y	4.00	$9,440.10	$37,760.40
OG-TWBF-B300500M-AR-1Y	Water Distribution Domain - Between $300-500 Million - 1Y	4.00	$6,202.07	$24,808.28
OG-TWBB-B300500M-AR-1Y	Stormwater Domain - Between $300-500 Million - 1Y	4.00	$6,202.07	$24,808.28
OG-TWBC-B300500M-AR-1Y	Transportation Domain - Between $300-500 Million - 1Y	4.00	$9,440.10	$37,760.40
OG-TWAY-B300500M-AR-1Y	Parks & Recreation Domain - Between $300-500 Million - 1Y	3.00	$6,202.07	$18,606.21
OG-TWBG-B300500M-AR-1Y	Water Treatment Domain - Between $300-500 Million - 1Y	5.00	$6,037.08	$30,185.40

EXHIBIT B

PART #	DESCRIPTION	QTY	UNIT PRICE	EXTENDED
OG-TWBD-B300500M-AR-1Y	Walkability Domain - Between $300-500 Million - 1Y	4.00	$4,411.38	$17,645.52
			Term 1 TOTAL:	$289,607.01

Billed on a Time and Materials Basis -
Monthly as Incurred

PART #	DESCRIPTION	QTY	UNIT PRICE	EXTENDED
OG-PSBG-B300500M-OT-0Y	Professional Services Deployment - Prepaid - Between $300-500 Million - 0Y --- *billed monthly as incurred*	732.00	$216.00	$158,112.00
			Billed on a Time and Materials Basis - Monthly as Incurred TOTAL:	$158,112.00

Billed Upon Completion

PART #	DESCRIPTION	QTY	UNIT PRICE	EXTENDED
OG-T&E	Reimbursable Travel and Expenses--- OpenMarket	10,400.00	$1.00	$10,400.00
			Billed Upon Completion TOTAL:	$10,400.00

TOTAL: $458,119.01

February 15, 2026 $304,087.33 (Optional Renewal - 5% Escalation)
February 15, 2027 $319,291.69 (Optional Renewal - 5% Escalation)
February 15, 2028 $335,256.28 (Optional Renewal - 5% Escalation)
February 15, 2029 $352,019.09 (Optional Renewal - 5% Escalation)

Quote Terms

Customer's use of the GSA MAS Contract: GS-35F-688GA is pursuant to the Terms and Conditions set forth at: https://www.vertosoft.com/gsa

Taxes: Sales tax shall be added at the time of an invoice, unless a copy of a valid tax exemption or resale certificate is provided.
Credit Card Orders: Additional fees may apply if paying by credit card.

All Purchase Orders must include: End User Name, Phone Number, Email Address, Purchase Order Number, Government Contract Number or Our Quote Number, Bill-To and Ship-To Address (Cannot ship to a PO Box), Period of Performance (if applicable), and a Signature of a duly Authorized Representative.

CERTIFICATE OF LIABILITY INSURANCE

DATE (MM/DD/YYYY): 1/10/2025

THIS CERTIFICATE IS ISSUED AS A MATTER OF INFORMATION ONLY AND CONFERS NO RIGHTS UPON THE CERTIFICATE HOLDER. THIS CERTIFICATE DOES NOT AFFIRMATIVELY OR NEGATIVELY AMEND, EXTEND OR ALTER THE COVERAGE AFFORDED BY THE POLICIES BELOW. THIS CERTIFICATE OF INSURANCE DOES NOT CONSTITUTE A CONTRACT BETWEEN THE ISSUING INSURER(S), AUTHORIZED REPRESENTATIVE OR PRODUCER, AND THE CERTIFICATE HOLDER.

IMPORTANT: If the certificate holder is an ADDITIONAL INSURED, the policy(ies) must have ADDITIONAL INSURED provisions or be endorsed. If SUBROGATION IS WAIVED, subject to the terms and conditions of the policy, certain policies may require an endorsement. A statement on this certificate does not confer rights to the certificate holder in lieu of such endorsement(s).

PRODUCER Preferred Ins. Services, Inc 4100 Monument Corner Dr., Suite 400 Fairfax VA 22030	**CONTACT NAME:** Certificate Department **PHONE (A/C, No, Ext):** 703-667-5940 **FAX (A/C, No):** 703-991-4838 **E-MAIL ADDRESS:** certs@preferins.com
INSURED VERTLLC-01 Vertosoft LLC 1602 VILLAGE MARKET BLVD SE STE 320 Leesburg VA 20175	**INSURER(S) AFFORDING COVERAGE** / **NAIC #** **INSURER A :** Valley Forge Insurance 20508 **INSURER B :** Continental Casualty Company 20443 **INSURER C :** Continental Insurance Company 35289 **INSURER D :** **INSURER E :** **INSURER F :**

COVERAGES **CERTIFICATE NUMBER:** 1741029904 **REVISION NUMBER:**

THIS IS TO CERTIFY THAT THE POLICIES OF INSURANCE LISTED BELOW HAVE BEEN ISSUED TO THE INSURED NAMED ABOVE FOR THE POLICY PERIOD INDICATED. NOTWITHSTANDING ANY REQUIREMENT, TERM OR CONDITION OF ANY CONTRACT OR OTHER DOCUMENT WITH RESPECT TO WHICH THIS CERTIFICATE MAY BE ISSUED OR MAY PERTAIN, THE INSURANCE AFFORDED BY THE POLICIES DESCRIBED HEREIN IS SUBJECT TO ALL THE TERMS, EXCLUSIONS AND CONDITIONS OF SUCH POLICIES. LIMITS SHOWN MAY HAVE BEEN REDUCED BY PAID CLAIMS.

INSR LTR	TYPE OF INSURANCE	ADDL INSD	SUBR WVD	POLICY NUMBER	POLICY EFF (MM/DD/YYYY)	POLICY EXP (MM/DD/YYYY)	LIMITS	
A	X **COMMERCIAL GENERAL LIABILITY** CLAIMS-MADE X OCCUR GEN'L AGGREGATE LIMIT APPLIES PER: X POLICY PRO-JECT LOC OTHER:	Y	Y	7013025936	12/1/2024	12/1/2025	EACH OCCURRENCE DAMAGE TO RENTED PREMISES (Ea occurrence) MED EXP (Any one person) PERSONAL & ADV INJURY GENERAL AGGREGATE PRODUCTS - COMP/OP AGG $	$ 2,000,000 $ 1,000,000 $ 10,000 $ 2,000,000 $ 4,000,000 $ 4,000,000 $
A	**AUTOMOBILE LIABILITY** ANY AUTO OWNED AUTOS ONLY X HIRED AUTOS ONLY SCHEDULED AUTOS X NON-OWNED AUTOS ONLY	Y	Y	7013025936	12/1/2024	12/1/2025	COMBINED SINGLE LIMIT (Ea accident) BODILY INJURY (Per person) BODILY INJURY (Per accident) PROPERTY DAMAGE (Per accident) $	$ 1,000,000 $ $ $ $
B	X **UMBRELLA LIAB** X OCCUR **EXCESS LIAB** CLAIMS-MADE DED X RETENTION $ 10,000	Y	Y	7013027489	12/1/2024	12/1/2025	EACH OCCURRENCE AGGREGATE $	$ 2,000,000 $ 2,000,000 $
C	**WORKERS COMPENSATION AND EMPLOYERS' LIABILITY** Y / N ANYPROPRIETOR/PARTNER/EXECUTIVE OFFICER/MEMBER EXCLUDED? N **(Mandatory in NH)** If yes, describe under DESCRIPTION OF OPERATIONS below	N / A	Y	7013027475	12/1/2024	12/1/2025	X PER STATUTE OTH-ER E.L. EACH ACCIDENT E.L. DISEASE - EA EMPLOYEE E.L. DISEASE - POLICY LIMIT	 $ 1,000,000 $ 1,000,000 $ 1,000,000
A	Tech E&O/Cyber/Media Liability			7013025936	12/1/2024	12/1/2025	Each Claim/Aggregate	4,000,000

DESCRIPTION OF OPERATIONS / LOCATIONS / VEHICLES (ACORD 101, Additional Remarks Schedule, may be attached if more space is required)

Re: City of Santa Fe Water Division, 801 W San Mateo Rd., Santa Fe, NM 87505 are Additional Insured with respect to General Liability, which includes on-going and completed operations, and Automobile Liability regarding all work performed by the named insured. Waiver of Subrogation in favor of Additional Insureds applies to General Liability, Automobile Liability and Workers' Compensation. Umbrella Liability Follows form. Primary & non-contributory wording applies to General Liability as required by written contract. Auto Insurance is primary (except for non-owned autos).

CERTIFICATE HOLDER

City of Santa Fe Water Division
801 W San Mateo Rd.
Santa Fe NM 78505

CANCELLATION

SHOULD ANY OF THE ABOVE DESCRIBED POLICIES BE CANCELLED BEFORE THE EXPIRATION DATE THEREOF, NOTICE WILL BE DELIVERED IN ACCORDANCE WITH THE POLICY PROVISIONS.

AUTHORIZED REPRESENTATIVE

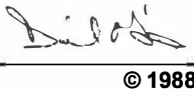

© 1988-2015 ACORD CORPORATION. All rights reserved.

7013025936



THIS ENDORSEMENT CHANGES THE POLICY. PLEASE READ IT CAREFULLY.

PRIMARY AND NONCONTRIBUTORY- OTHER INSURANCE CONDITION

This endorsement modifies insurance provided under the following:

BUSINESSOWNERS COMMON POLICY CONDITIONS

The following is added to Paragraph **H. Other Insurance** and supersedes any provision to the contrary:

Primary And Noncontributory Insurance

This insurance is primary to and will not seek contribution from any other insurance available to an additional insured under your policy provided that:

1. The additional insured is a Named Insured under such other insurance; and
2. You have agreed in writing in a contract or agreement that this insurance would be primary and would not seek contribution from any other insurance available to the additional insured.

All other terms and conditions of the Policy remain unchanged.

COMMERCIAL UMBRELLA PLUS COVERAGE PART

Various provisions in this policy restrict coverage. Read the entire policy carefully to determine rights, duties and what is and is not covered.

Throughout this policy the words "you" and "your" refer to the Named Insured identified under **SECTION II** – **WHO IS AN INSURED** of this policy.

The word "insured" means any person or organization qualifying as such under **SECTION II** – **WHO IS AN INSURED.**

The words "we," "us" and "our" refer to the Company providing this insurance.

Other words and phrases that appear in quotation marks have special meaning. Refer to **SECTION V** – **DEFINITIONS.**

SECTION I – COVERAGES

1. Insuring Agreement

We will pay on behalf of the insured those sums in excess of "scheduled underlying insurance," "unscheduled underlying insurance" or the "retained limit" that the insured becomes legally obligated to pay as "ultimate net loss" because of "bodily injury," "property damage" or "personal and advertising injury" to which this insurance applies.

a. This insurance applies to "bodily injury" and "property damage" only if:

(1) The "bodily injury" or "property damage" is caused by an "incident" anywhere in the world;

(2) The "bodily injury" or "property damage" occurs during the policy period; and

(3) With respect to "bodily injury" or "property damage" that continues, changes or resumes so as to occur during more than one policy period, both of the following conditions are met:

(i) Prior to the policy period, no "authorized insured" knew that the "bodily injury" or "property damage" had occurred, in whole or in part; and

(ii) During the policy period, an "authorized insured" first knew that the "bodily injury" or "property damage" had occurred, in whole or in part.

For purposes of this Paragraph **(1) a.(3)** only, if **(a)** "bodily injury" or "property damage" that occurs during this policy period does not continue, change or resume after the termination of this policy period; and **(b)** no "authorized insured" first knows of this "bodily injury" or "property damage" until after the termination of this policy period, then such first knowledge will be deemed to be during this policy period.

b. "Bodily injury" or "property damage" which occurs during the policy period and was not, prior to the policy period, known to have occurred by any "authorized insured" includes any continuation, change or resumption of that "bodily injury" or "property damage" after the end of the policy period.

c. "Bodily injury" or "property damage" will be deemed to have been known to have occurred at the earliest time when any "authorized insured":

(1) Reports all, or any part, of the "bodily injury" or "property damage" to us or any other insurer;

(2) Receives a written or verbal demand, claim or "suit" for damages because of the "bodily injury" or "property damage"; or

(3) Becomes aware by any other means that "bodily injury" or "property damage" has occurred or has begun to occur.

d. This insurance applies to "personal and advertising injury" caused by an "incident" committed anywhere in the world during the policy period.

If we are prevented by law, statute or otherwise from paying on behalf of the insured, then we will indemnify the insured for those sums that the insured is legally obligated to pay as "ultimate net loss" because of "bodily injury," "property damage" or "personal and advertising injury" to which this insurance applies.

2. Exclusions

This Insurance does not apply to:

a. Expected or Intended Injury

"Bodily injury" or "property damage" expected or intended from the standpoint of the insured. This exclusion does not apply to "bodily injury" resulting from the use of reasonable force to protect persons or property. This exclusion does not apply to Employers Liability claims for "bodily injury" covered by "scheduled underlying insurance."

b. Contractual Liability

"Bodily injury," "property damage" or "personal and advertising injury" for which the insured is obligated to pay damages by reason of the

4002000897013027489894 6

assumption of liability in a contract or agreement. This exclusion does not apply to liability for "ultimate net loss":

(1) That the insured would have in the absence of the contract or agreement; or

(2) Because of "bodily injury" or "property damage" assumed in a contract or agreement that is an "insured contract," provided the "bodily injury" or "property damage" occurs subsequent to the execution of the contract or agreement.

c. "Personal and advertising injury" Exclusions

"Personal and advertising injury":

(1) Caused by or at the direction of the insured with the knowledge that the act would violate the rights of another and would inflict "personal and advertising injury";

(2) Arising out of oral or written publication of material, if done by or at the direction of the insured with knowledge of its falsity;

(3) Arising out of oral or written publication of material whose first publication took place before the beginning of the policy period;

(4) Arising out of a criminal act committed by or at the direction of the insured;

(5) Arising out of a breach of contract, except an implied contract to use another's advertising idea in your "advertisement";

(6) Arising out of the failure of goods, products or services to conform with any statement of quality or performance made in your "advertisement";

(7) Arising out of the wrong description of the price of goods, products or services stated in your "advertisement";

(8) Arising out of the infringement of copyright, patent, trademark, trade secret or other intellectual property rights;

However, this exclusion does not apply to infringement, in your "advertisement," of copyright, trade dress or slogan;

(9) Committed by an insured whose business is:

(a) Advertising, broadcasting, publishing or telecasting;

(b) Designing or determining content of websites for others; or

(c) An Internet search, access, content or service provider;

However, this exclusion does not apply to paragraphs **10. a., b.** and **c.** of "personal and advertising injury" under **SECTION V – DEFINITIONS**;

For the purposes of this exclusion, the placing of frames, borders or links, or advertising, for you or others anywhere on the Internet, is not by itself, considered the business of advertising, broadcasting, publishing or telecasting.

(10) Arising out of an electronic chatroom or bulletin board the insured hosts, owns, or over which the insured exercises control; or

(11) Arising out of the unauthorized use of another's name or product in your e-mail address, domain name or metatag, or any other similar tactics to mislead another's potential customers.

d. Workers' Compensation and Similar Laws

Any obligation of the insured under a:

(1) Workers' compensation;

(2) Disability benefits; or

(3) Unemployment compensation

law or any similar law.

e. Employers Liability

"Bodily injury" to:

(1) An employee of the insured arising out of and in the course of:

(a) Employment by the insured; or

(b) Performing duties related to the conduct of the insured's business; or

(2) The spouse, child, parent, brother or sister of that employee as a consequence of **(1)** above.

This exclusion applies:

(1) Whether the insured may be liable as an employer or in any other capacity; and

(2) To any obligation to share damages with or repay someone else who must pay damages because of the injury.

This exclusion does not apply:

(1) To liability assumed by the insured under an "insured contract"; or

(2) Only to the extent that coverage is provided by "scheduled underlying insurance."

f. Pollution

(1) "Bodily injury" or "property damage" arising out of the actual, alleged or threatened discharge, dispersal, seepage, migration, release or escape of "pollutants":

(a) At or from any premises, site or location which is or was at any time owned or occupied by, or rented or loaned to, any insured;

(b) At or from any premises, site or location which is or was at any time used by or for any insured or others for the handling, storage, disposal, processing or treatment of waste;

(c) Which are or were at any time transported, handled, stored, treated, disposed of, or processed as waste by or for any insured or any person or organization for whom you may be legally responsible; or

(d) At or from any premises, site or location on which any insured or any contractors or subcontractors working directly or indirectly on any insured's behalf are performing operations:

(i) If the "pollutants" are brought on or to the premises, site or location in connection with such operations by such insured, contractor or subcontractor; or

(ii) If the operations are to test for, monitor, clean up, remove, contain, treat, detoxify or neutralize, or in any way respond to, or assess the effects of "pollutants."

(e) That are, or that are contained in property that is:

(i) Being transported or towed by, or handled for movement into, onto or from a covered "automobile";

(ii) Otherwise in the course of transit;

(iii) Being stored, disposed of, treated or processed in or upon the covered "automobile";

(f) Before the "pollutants" or property in which the "pollutants" are contained are moved from the place where they are accepted by the insured for movement into or onto the covered "automobile"; or

(g) After the "pollutants" or property in which the "pollutants" are contained are moved from the covered "automobile" to the place where they are finally:

(i) Delivered;

(ii) Disposed of; or

(iii) Abandoned

by the insured.

Subparagraphs **(a)** and **(d)(i)** do not apply to "bodily injury" or "property damage" arising out of heat, smoke or fumes from a hostile fire.

As used in this exclusion, a hostile fire means one which becomes uncontrollable or breaks out from where it was intended to be.

Subparagraph **(d)(i)** does not apply to "bodily injury" or "property damage" arising out of the escape of fuels, lubricants, or other operating fluids which are needed to perform the normal electrical, hydraulic or mechanical functions necessary for operation of "mobile equipment" or its parts, if such fuels, lubricants or other operating fluids escape from a vehicle part designed to hold, store or receive them. This exception does not apply if the "bodily injury" or "property damage" arises out of the intentional discharge, dispersal or release of the fuels, lubricants or other operating fluids, or if such fuels, lubricants or other operating fluids are brought on or to the premises, site or location with the intent that they be discharged, dispersed or released as part of the operations being performed by such insured, contractor or subcontractor.

Subparagraph **(e)(iii)** does not apply to fuels, lubricants, fluids, exhaust, gases or other similar "pollutants" that are needed for or result from the normal electrical, hydraulic or mechanical functioning of the covered "automobile" or its parts if the "pollutants" escape or are discharged, dispersed or released directly from an "automobile" part designed by its manufacturer to hold, store, receive or dispose of such "pollutants."

Subparagraphs **(f)** and **(g)** do not apply if the "pollutants" or property in which the "pollutants" are contained are upset, overturned or damaged as a result of the maintenance or use of a covered "automobile" and the discharge, dispersal, release or escape of the "pollutants" is caused directly by such upset, overturn or damage.

(2) "Personal and advertising injury" arising out of the actual, alleged or threatened discharge, dispersal, seepage, migration, release or escape of "pollutants" at any time.

4002000897013027489894 7

(3) Any loss, cost or expense arising out of any:

(a) Request, demand or order that any insured or others test for, monitor, clean up, remove, contain, treat, detoxify or neutralize, or in any way respond to, or assess the effects of "pollutants"; or

(b) Claim or "suit" by or on behalf of a governmental authority for damages because of testing for, monitoring, cleaning up, removing, containing, treating, detoxifying or neutralizing, or in any way responding to, or assessing the effects of "pollutants."

g. Watercraft

"Bodily injury" or "property damage" arising out of the:

(1) Ownership;

(2) Maintenance;

(3) Use; or

(4) Entrustment to others

of a "watercraft" owned or operated by or rented or loaned to an insured. Use includes operation or "loading or unloading."

This exclusion applies even if the claims against any insured allege negligence or other wrongdoing in the supervision, hiring, employment, training, or monitoring of others by that insured, if the "incident" which caused the "bodily injury" or "property damage" involved the ownership, maintenance, use or entrustment to others of any watercraft that is owned or operated by or rented or loaned to any insured.

This exclusion does not apply to:

(1) A "watercraft" while ashore on premises you own or rent;

(2) A "watercraft" you do not own that is:

(a) Less than 55 feet long; and

(b) Not being used to carry persons or property for a charge; or

(3) Liability assumed under an "insured contract" for the ownership, maintenance or use of "watercraft."

h. Aircraft

The ownership, maintenance, operation, use, entrustment to others or "loading or unloading" of any "aircraft":

(1) Owned by an insured; or

(2) Chartered without crew by an insured or on an insured's behalf.

This exclusion applies even if the claims against any insured allege negligence or other wrongdoing in the supervision, hiring, employment, training, or monitoring of others by that insured, if the "incident" which caused the "bodily injury" or "property damage" involved the ownership, maintenance, use or entrustment to others of any "aircraft" that is owned or operated by or rented or loaned to any insured.

i. War

Any liability arising out of:

(1) War, including undeclared or civil war;

(2) Warlike action by a military force, including action in hindering or defending against an actual or expected attack, by any government, sovereign or other authority using military personnel or other agents; or

(3) Insurrection, rebellion, revolution, usurped power, or action taken by governmental authority in hindering or defending against any of these.

j. Damage to Property

"Property damage" to:

(1) Property you own, rent, or occupy, including any costs or expenses incurred by you, or any other person, organization or entity, for repair, replacement, enhancement, restoration or maintenance of such property for any reason, including prevention of injury to a person or damage to another's property;

(2) Premises you sell, give away or abandon, if the "property damage" arises out of any part of those premises;

(3) Property loaned to you;

(4) Personal property in the care, custody or control of the insured;

(5) That particular part of real property on which you or any contractors or subcontractors working directly or indirectly on your behalf are performing operations, if the "property damage" arises out of those operations; or

(6) That particular part of any property that must be restored, repaired or replaced because "your work" was incorrectly performed on it.

Paragraph **(2)** of this exclusion does not apply if the premises are "your work" and were never occupied, rented or held for rental by you.

Paragraphs **(3), (4), (5)** and **(6)** of this exclusion do not apply to liability assumed under a sidetrack agreement.

Paragraph **(6)** of this exclusion does not apply to "property damage" included in the "products-completed operations hazard."

k. Damage to your Product

"Property damage" to "your product" arising out of it or any part of it.

l. Damage to you Work

"Property damage" to "your work" arising out of it or any part of it and included in the "products-completed operations hazard."

This exclusion does not apply if the damaged work or the work out of which the damage arises was performed on your behalf by a subcontractor.

m. Damage to Impaired Property or Property Not Physically Injured

"Property damage" to "impaired property" or property that has not been physically injured, arising out of:

(1) A defect, deficiency, inadequacy or dangerous condition in "your product" or "your work"; or

(2) A delay or failure by you or anyone acting on your behalf to perform a contract or agreement in accordance with its terms.

This exclusion does not apply to the loss of use of other property arising out of sudden and accidental physical injury to "your product" or "your work" after it has been put to its intended use.

n. Recall of Products, Work Or Impaired Property

Damages claimed for any loss, cost or expense incurred by you or others for the loss of use, withdrawal, recall, inspection, repair, replacement, adjustment, removal or disposal of:

(1) "Your product";

(2) "Your work"; or

(3) "Impaired property";

if such product, work, or property is withdrawn or recalled from the market or from use by any person or organization because of a known or suspected defect, deficiency, inadequacy or dangerous condition in it.

o. E.R.I.S.A.

Liability for alleged or actual violations of the Employees Retirement Income Security Act of 1974 or any amendments or additions thereto.

p. Directors and Officers

Liability for a wrongful act, error, omission or breach of duty by an insured in the performance of the office of director or officer of an organization.

q. Uninsured/Underinsured Motorist and Similar Laws

Liability imposed on the insured under an uninsured/underinsured motorist law, a personal injury protection law, a reparations benefit law or other similar law.

r. Electronic Data

Any liability arising out of the loss of, loss of use of, damage to, corruption of, inability to access, or inability to manipulate "electronic data."

s. Nonemployment Related Discrimination

To any alleged or actual nonemployment related discrimination committed intentionally against a person.

t. Asbestos

(1) "Bodily Injury," "property damage" or "personal and advertising injury" arising out of the actual, alleged or threatened exposure at any time to "asbestos"; or

(2) Any loss, cost or expense that may be awarded or incurred:

(a) By reason of a claim or "suit" for any such injury or damage; or

(b) In complying with a governmental direction or request to test for, monitor, clean up, remove, contain or dispose of "asbestos."

u. Fungi and Microbes

(1) "Bodily injury," "property damage" or "personal and advertising injury," which would not have occurred, in whole or in part, but for the actual, alleged or threatened inhalation of, ingestion of, contact with, exposure to, existence of, or presence of any "fungi or microbes"; or

(2) Any loss, cost, or expense arising out of the testing for, monitoring, cleaning up, removing, containing, treating, detoxifying, neutralizing, remediating, or disposing of, or in any way responding to or assessing the effects of "fungi or microbes" by any insured or by anyone else.

This exclusion applies regardless of any other cause or event that contributes concurrently or in any sequence to such injury or damage, loss, cost or expense.

v. Silica

(1) "Bodily injury" arising in whole or in part out of the actual, alleged or threatened respiration or ingestion at any time of "silica;" or

4002000897013027 4898948

(2) "Personal and advertising injury" or "property damage" arising in whole or in part out of the actual, alleged or threatened presence of "silica."

w. Named Insured vs. Named Insured

Any liability arising out of claims or "suits" by a named insured against another named insured.

x. Employment Related Practices

Any liability arising out of:

(1) A refusal to employ;

(2) Termination of employment;

(3) Demotion, evaluation, reassignment, discipline;

(4) Coercion, defamation, discrimination, harassment or humiliation; or

any other employment related practices, policies, acts or omissions.

y. Terrorism Limitation

"Bodily injury" or "property damage" arising out of any act of terrorism, unless, and then only to the extent that coverage is provided by "scheduled underlying insurance."

z. Liquor Liability Limitation

"Bodily injury" or "property damage" for which an insured may be held liable by reason of:

(1) Causing or contributing to the intoxication of any person;

(2) The furnishing of alcoholic beverages to a person under the legal drinking age or under the influence of alcohol; or

(3) Any statute, ordinance or regulation relating to the sale, gift, distribution or use of alcoholic beverages;

unless, and then only to the extent that coverage is provided by "scheduled underlying insurance."

aa. Auto and Mobile Equipment Limitation

Any liability arising out of the:

(1) Ownership;

(2) Maintenance;

(3) Use; or

(4) Entrustment to others

of an "automobile" or "mobile equipment" owned or operated by or rented or loaned to an insured unless, and then only to the extent that coverage is provided by "scheduled underlying insurance."

To the extent that this insurance applies to an "automobile" or "mobile equipment" it is further subject to the pollution exclusion, exclusion **f.** of this policy.

Use includes operation or "loading or unloading."

bb. Do Not Call

Any liability arising directly or indirectly out of any action or omission that violates or is alleged to violate:

(1) The Telephone Consumer Protection Act (TCPA), including any amendment of or addition to such law; or

(2) The CAN-SPAM Act of 2003, including any amendment of or addition to such law; or

(3) Any statute, ordinance or regulation, other than the TCPA or the CAN-SPAM Act of 2003, that prohibits or limits the sending, transmitting, communicating or distribution of material or information.

SECTION II – WHO IS AN INSURED

1. Named Insured means any individual or organization stated in the Declarations of this policy and if you are designated in the Declarations of this policy as:

a. An individual, you and your spouse, but only with respect to the conduct of a business of which you are the sole owner.

If you are designated in the Declarations of this policy as an individual, this policy shall not apply to liability arising out of your domestic or non-business activities. This does not apply to the ownership, maintenance, use or "loading or unloading" of any "automobile," or to the Personal Umbrella Liability Coverage Part.

b. A partnership or joint venture, you and your members, your partners, and their spouses, but only with respect to the conduct of your business.

No person or organization is an insured with respect to the conduct of any current or past partnership or joint venture that is not shown as a Named Insured in the Declarations.

c. An organization other than a partnership or joint venture, you and your executive officers and directors, but only with respect to their duties as your officers or directors. Your stockholders are also named insureds, but only with respect to their liability as stockholders.

d. A limited liability company, you and your members, but only with respect to the conduct of your business. Your managers are also named insureds but only with respect to their duties as your managers.

No person or organization is an insured with respect to the conduct of any current or past limited liability company that is not shown as a Named Insured in the Declarations.

e. A corporation or organization, other than partnerships, joint ventures or limited liability companies, that you form, acquire or gain control of during the policy period, but only with respect to "bodily injury," "property damage" or "personal and advertising injury" taking place after you form, acquire or gain control of such corporation or organization.

2. Insured means the Named Insured and:

a. Your "volunteer workers" only while performing duties related to the conduct of your business, or your employees, other than your executive officers and directors (if you are an organization other than a partnership, joint venture or limited liability company) or your members (if you are a limited liability company) but only for acts within the scope of their employment by you or while performing duties related to the conduct or your business. However, none of these employees or "volunteer workers" is an insured for:

(1) "Bodily injury" or "personal and advertising injury":

(a) To you; to your partners or members (if you are a partnership or joint venture) to your members (if you are a limited liability company) or to a co-employee while in the course of his or her employment or performing duties related to the conduct of your business, or to your other "volunteer workers" while performing duties related to the conduct of your business;

(b) To the spouse, child, parent, brother or sister of that co-employee or "volunteer worker" as a consequence of Paragraph **(1)(a)** above;

(c) For which there is any obligation to share damages with or repay someone else who must pay damages because of the injury described in Paragraphs **(1)(a) or (b)** above; or

(d) Arising out of his or her providing or failing to provide professional health care services.

(2) "Property damage" to property:

(a) Owned, occupied or used by;

(b) Rented to, in the care, custody or control or, or over which physical control is being exercised for any purpose by you, any of your employees, "volunteer workers" any partner or member (if you are a partnership or joint venture) or any member (if you are a limited liability company).

b. A person or organization for whom you are required, by virtue of a written contract entered into prior to the "bodily injury," "property damage" or "personal and advertising injury" occurring or being committed, to provide the insurance that is afforded by this policy. This insurance applies only with respect to operations by you or on your behalf or to facilities you own or use, but only to the extent of the limits of insurance required by such contract, not to exceed the limits of insurance in this policy.

c. Any other persons or organizations included as an insured under the provisions of the "scheduled underlying insurance" shown in the Declarations of this policy and then only for the same coverage, except for limits of insurance, afforded under such "scheduled underlying insurance."

However, If a blanket additional insured endorsement is attached to the general liability "scheduled underlying insurance" pursuant to a written or oral contract or agreement between you and another person or organization (called additional insured), this insurance is excess over such insurance provided to the additional insured subject to the following conditions:

(1) If the limits specified in the written contract or agreement are less than the limits provided by the "scheduled underlying insurance," then no coverage is provided to the additional insured under this policy.

(2) If the limits specified in the written contract or agreement are greater than the limits provided by the "scheduled underlying insurance," then this insurance is excess over the insurance provided by the "scheduled underlying insurance." The limits of insurance for the additional insured are the lesser of:

(i) The limits specified in the written contract; or

(ii) The limits of the "scheduled underlying insurance" plus the limits of this policy.

SECTION III – LIMITS OF INSURANCE

1. The Limits of Insurance shown in the Declarations and the rules below fix the most we will pay regardless of the number of:

a. Insureds;

b. Claims made or "suits" brought;

c. Persons or organizations making claims or bringing "suits."

40020008970130274898949

d. "Automobiles," "aircraft" or "watercraft" to which this policy applies; or

e. Coverages under which loss is insured in this policy.

2. The limit of insurance shown in the Declarations as the Aggregate Limit is the most we will pay for the sum of all "ultimate net loss," to which this insurance applies and applies separately to all "ultimate net loss":

a. Included in the "products-completed operations hazard";

b. To which, and in the same manner, an aggregate limit applies under "scheduled underlying insurance" other than "ultimate net loss" included in the "products-competed operations hazard"; and

c. To which no "scheduled underlying insurance" applies.

The Aggregate Limit does not apply to "ultimate net loss" for which no aggregate limit applies in the "scheduled underlying insurance."

3. Subject to **2.** above, the limit of insurance shown in the Declarations as the Each Incident limit is the most we will pay for the sum of all "ultimate net loss" to which this insurance applies arising arising out of any one "incident."

4. In the event of reduction or exhaustion of the aggregate limits of insurance under "scheduled underlying insurance" solely by reason of payments of a combination of covered:

a. Expenses;

b. Settlements; or

c. Judgments

paid thereunder as a result of "bodily injury," property damage" or "personal and advertising injury" taking place during this policy period, this policy shall, subject to this limit of insurance provision and to the remaining terms and provisions and conditions of this policy:

a. Apply in excess of such reduction of "scheduled underlying insurance"; or

b. Apply in place of the exhausted amount of "scheduled underlying insurance."

Nothing in **a.** or **b.** above shall serve to increase the limits of insurance shown in the Declarations.

5. The limits of this policy shall apply separately to:

a. Each consecutive annual period; and

b. Remaining periods of less than 12 months;

starting with the beginning of the policy period shown in the Declarations, unless the policy period is extended after issuance for an additional period of less than 12 months. In that case, the additional period will be deemed part of the last preceding period for purposes of determining the limits of insurance.

SECTION IV – CONDITIONS

1. Financial Impairment

Bankruptcy, rehabilitation, receivership, liquidation or other financial impairment of you or an "underlying insurer" shall neither relieve nor increase any of our obligations under this policy.

In the event there is diminished recovery or no recovery available to you as a result of such financial impairment of an insurer providing "scheduled underlying insurance," the coverage under this policy shall apply only in excess of the limits of insurance stated in the "scheduled underlying insurance." Under no circumstances shall we be required to drop down and replace the limits of insurance, or assume the obligations of a financially impaired insurer.

2. Duties of the Insured

a. In the event of an "incident" which has not resulted in a claim or suit.

Whenever you have information of an "incident" which involves injuries or damages likely to involve this policy, written notice shall be given by or for you to us or to our authorized agent as soon as practicable. The notice shall contain:

(1) Particular information sufficient to identify the insured;

(2) Such information as can be reasonably obtained with respect to time, place and circumstances of the occurrence or offense; and

(3) Names and addresses of the insured and of available witnesses.

b. In the Event of Claims or Suit

You shall provide us with written notice as soon as practicable whenever:

(1) A claim is made or "suit" is brought against you;

(2) You receive notice that a right to bring claim or "suit" against you will be asserted; or

(3) You obtain information that the obligation of "underlying insurers" to:

(a) Investigate;

(b) Defend;

(c) Pay on behalf of; or

(d) Indemnify

you has ceased.

Every demand, notice, summons, amended complaint or other process received by you or your representative shall be forwarded with each notice.

3. Legal Action Against Us

No legal action shall be brought against us unless you have fully complied with all the terms of this policy and the amount of your obligation to pay has been finally determined either by:

a. Judgment against you after actual trial; or

b. Written agreement between us, you and the claimant.

4. Other Insurance

This insurance is excess over and will not contribute with any other insurance available to the insured whether such other insurance is stated to be primary, contributory, excess, contingent or otherwise. This condition does not apply to insurance purchased specifically to apply in excess of this insurance.

5. Premium Audit

a. We will compute all premiums for this policy in accordance with our rules and rates.

b. If the premium is shown in the Declarations as flat, the premium for this policy is not subject to adjustment.

c. If the premium is shown in the Declarations as adjustable, the premium shown as the advance premium is a deposit premium only. At the close of each audit period we will compute the earned premium for that period. Audit premiums are due and payable on notice to the first Named Insured shown in the Declarations. If the sum of the advance and audit premiums paid for the policy term are greater than the earned premium, we will return the excess, subject to the minimum premium, to the first Named Insured shown in the Declarations.

d. The first Named Insured shown in the Declarations must keep records of the information we need for premium computation, and send us copies at such times as we request.

6. Nonrenewal

If we decide not to renew this policy, we will mail or deliver to the first Named Insured shown in the Declarations written notice of the nonrenewal not less than 30 days before the expiration date.

If notice is mailed, proof of mailing will be sufficient proof of notice.

7. Severability of Interests

The insurance afforded applies separately to each insured against whom claim is made or "suit" is brought. However, the inclusion of more than one insured shall not operate to increase the limits of insurance.

8. Annual Rating

If this policy is issued for a period in excess of one year, the premium may be revised on each annual anniversary in accordance with our rates and rules in effect at that time.

9. "Scheduled Underlying Insurance"

Material change in premium for "scheduled underlying insurance" shall be promptly reported to us. Premium for this policy may be adjusted to reflect changes in underlying insurance in accordance with our manuals in effect at the time of the change.

10. Maintenance of "Scheduled Underlying Insurance"

While this policy is in force you agree that the policies listed in the Declarations as "scheduled underlying insurance" and their renewals and replacements shall be maintained, without alterations of terms or conditions, in full effect during the term of this policy; except for reduction or exhaustion of the aggregate limits of insurance in the "scheduled underlying insurance," provided that such reduction or exhaustion is solely the result of "incidents" taking place during this policy period, and not before. If you fail to maintain "scheduled underlying insurance," this condition shall not invalidate this policy. However, in the event of such failure, we will only be liable to the same extent as if you had complied with this condition.

11. Appeals

If you or your "underlying insurers" elect not to appeal a judgment in excess of the limits of insurance afforded by the:

a. "Scheduled underlying insurance";

b. "Unscheduled underlying insurance"; or

c. "Retained limit";

we may elect to appeal. Our limit of liability shall not be increased because of such appeal. We will, however, pay the following costs and expenses:

a. All premium bonds to release attachments for an amount not in excess of the applicable limit of liability of this policy;

b. All premiums on appeal bonds required in such defended "suit," but without obligation to apply for or furnish such bonds;

c. Court fees;

d. Costs and expenses taxed against you by the appellate court and interest accruing after entry of a judgment against you and before we have:

(1) Paid;

4002000897013027 4898950

(2) Offered to pay; or

(3) Deposited in court

the part of the judgment that is within the applicable limit of insurance. Where the "underlying insurers" terminate their liability to pay interest on the judgment by an offer to pay their limits, you shall demand that such limits be paid. If the appeal is successful, such amounts not obligated to be paid shall be returned to such "underlying insurer."

12. Subrogation

In the case of any payments by us under the coverages of this policy, we shall be subrogated to all rights of recovery against any other party which you may have and will cooperate with you and all other interests. Amounts recovered shall be apportioned in the following order:

a. Amounts paid in excess of the payments under this policy shall first be reimbursed up to the amount paid by those, including you, who made such payments;

b. We are then to be reimbursed up to the amount we paid;

c. Any remainder shall be available to the interests of those over whom this coverage is in excess and who are entitled to claim such remainder.

Expenses necessary to the recovery of such amounts shall be divided between the interests concerned, including you, in the ratio of their respective recoveries as finally settled.

13. Settlement of Claims or Suit

We may pay, but are not obligated to pay, any part or all of the amount of the "retained limit" to effect settlement of a claim or "suit." Upon notification of the action taken you shall promptly reimburse us for such part of the "retained limit" that we had paid. All named insureds are jointly and severally responsible for our reimbursement and agree to make such reimbursement within 30 days after we give you written notice or demand for payment.

14. Sole Agent

The insured first named in the Declarations is authorized to act on behalf of all named insureds and other insureds with respect to:

a. The giving and receiving of notice of cancellation; and

b. Receiving return premium that may be payable under this policy.

The insured first named in the Declarations is responsible for the payment of premiums, but the other named Insureds jointly and severally agree to make such payments in full if the insured first named fails to pay the amount due within 30 days after we give written notice or demand.

15. Trade Sanctions

In accordance with laws and regulations of the United States concerning economic and trade embargoes, this policy is void ab initio (void from its inception) with respect to any term or condition of this policy that violates any laws or regulations of the United States concerning economic and trade embargoes including, but not limited to the following:

a. Any insured, or any person or entity claiming the benefits of an insured, who is or becomes a Specially Designated National or Blocked Person or who is otherwise subject to U.S. economic or trade sanctions;

b. Any claim or "suit" that is brought in a Sanctioned Country or by a Sanctioned Country Government, where any action in connection with such claim or "suit" is prohibited by U.S. economic or trade sanctions;

c. Any claim or "suit" that is brought by any Specially Designated National or Blocked Person or any person or entity who is otherwise subject to U.S. economic or trade sanctions;

d. Property that is located in a Sanctioned Country or that is owned by, rented to or in the care, custody or control of a Sanctioned Country Government, where any activities related to such property are prohibited by U.S. economic or trade sanctions; or

e. Property that is owned by, rented to or in the care, custody or control of a Specially Designated National or Blocked Person, or any person or entity who is otherwise subject to U.S. economic or trade sanctions.

As used in this policy a Specially Designated National or Blocked Person is any person or entity that is on the list of Specially Designated Nationals and Blocked Persons issued by the U.S. Treasury Department's Office of Foreign Asset Control (O.F.A.C.) as it may be from time to time amended.

As used in this policy a Sanctioned Country is any country that is the subject of trade or economic embargoes imposed by the laws or regulations of the United States of America.

SECTION V – DEFINITIONS

1. "Advertisement" means a notice that is broadcast or published to the general public or specific market segments about your goods, products or services for the purpose of attracting customers or supporters. For the purposes of this definition

a. Notices that are published include material placed on the Internet or on similar electronic means of communication; and

b. Regarding websites, only that part of a website that is about your goods or services for the purposes of attracting customers or supporters is considered an advertisement.

2. "Automobile" means

a. A land motor vehicle, trailer or semitrailer designed for travel on public roads; including any attached machinery or equipment; or

b. Any other land vehicle that is subject to a compulsory or financial responsibility law or other motor vehicle insurance law in the state where it is licensed or principally garaged.

However, "automobile" does not include "mobile equipment."

3. "Bodily injury" means bodily injury, sickness or disease sustained by a person, including death, humiliation, shock, mental anguish or mental injury by that person at any time which results as a consequence of the bodily injury, sickness or disease.

4. "Aircraft" means a vehicle designed to transport persons or property in the air.

5. "Impaired property" means tangible property, other than "your product" or "your work," that cannot be used or is less useful because:

a. It incorporates "your product" or "your work" that is known or thought to be defective, deficient, inadequate or dangerous; or

b. You have failed to fulfill the terms of a contract or agreement;

if such property can be restored to use by:

a. The repair, replacement, adjustment or removal of "your product" or "your work"; or

b. Your fulfilling the terms of the contract or agreement.

6. "Insured contract" means:

a. A lease of premises;

b. A sidetrack agreement;

c. An easement or license agreement, except in connection with construction or demolition operations on or within 50 feet of a railroad;

d. An indemnification of a municipality as required by ordinance, except in connection with work for a municipality;

e. An elevator maintenance agreement; or

f. The part of other contracts or agreements pertaining to your business (including an indemnification of a municipality in connection with work performed for a municipality) under which you assume the tort liability to pay damages because of "bodily injury" or "property damage" to a third person or organization, if the contracts or agreements are made prior to the "bodily injury" or "property damage."

Tort liability means liability that would be imposed by law in the absence of contracts or agreements.

An "insured contract" does not include that part of a contract or agreement:

a. That indemnifies an architect, engineer or surveyor for an injury or damages arising out of:

(1) Preparing, approving or failing to prepare or approve:

(a) Maps;

(b) Drawings;

(c) Opinions;

(d) Reports;

(e) Surveys;

(f) Change orders;

(g) Designs; or

(h) Specifications; or

(2) Giving directions or instructions, or failing to give them, if that is the primary cause of the injury or damage;

b. Under which the insured, if an architect, engineer or surveyor, assumes liability for injury or damage arising out of the insured's rendering or failure to render professional services, including those listed in **a.(1)** above and supervisory, inspection or engineering services; or

c. That indemnifies a person or organization for damage by fire to premises rented or loaned to an insured.

7. "Loading or unloading" means the handling of property:

a. After it is moved from the place where it is accepted for movement into or onto an "aircraft," "watercraft" or "automobile";

b. While it is in or on an "aircraft," "watercraft" or "automobile"; or

c. While it is being moved from an "aircraft," "watercraft" or "automobile" to the place where it is finally delivered;

but "loading or unloading" does not include the movement of property by means of a mechanical device, other than a hand truck, that is not attached to the "aircraft," "watercraft" or "automobile."

4002000897013027489895 1

8. **"Mobile equipment"** means any of the following types of land vehicles, including any attached machinery or equipment:

   a. Bulldozers, farm machinery, forklifts and other vehicles designed for use principally off public roads;

   b. Vehicles that travel on crawler treads;

   c. Vehicles maintained for use solely on or next to premises you own or rent;

   d. Vehicles, whether self-propelled or not, maintained primarily to provide mobility to permanently mounted:

      (1) Power cranes, shovels, loaders, diggers or drills; or

      (2) Road construction or resurfacing equipment such as graders, scrapers or rollers;

   e. Vehicles not described in **a., b., c.** or **d.** above that are not self-propelled and are maintained primarily to provide mobility to permanently attached equipment of the following types:

      (1) Air compressors, pumps, and generators, including spraying, welding, building cleaning, geophysical exploration, lighting and well servicing equipment; or

      (2) Cherry pickers and similar devices used to raise or lower workers;

   f. Vehicles not described in **a., b., c.** or **d.** above maintained primarily for purposes other than the transportation of persons or cargo.

      However, self-propelled vehicles with the following type of permanently attached equipment are not "mobile equipment" but will be considered "automobiles":

      (1) Equipment designed primarily for:

         (a) Snow removal ;

         (b) Road maintenance, but not construction or resurfacing; or

         (c) Street cleaning;

      (2) Cherry pickers and similar devices mounted on "automobiles" or truck chassis and used to raise or lower workers; and

      (3) Air compressors, pumps and generators, including spraying, welding, building cleaning, geophysical exploration, lighting and well servicing equipment.

   However, "mobile equipment" does not include any land vehicles that are subject to a compulsory or financial responsibility law or other motor vehicle insurance law in the state where it is licensed or principally garaged. Land vehicles subject to a compulsory or financial responsibility law or other motor vehicle insurance law are considered "automobiles"

9. **"Incident"**

   a. With respect to "bodily injury" and "property damage," "incident" means an occurrence. An occurrence means an accident, including continuous or repeated exposure to substantially the same general harmful conditions.

   b. With respect to "personal and advertising injury," "incident" means an offense arising out of your business.

10. **"Personal and Advertising Injury"** means injury, including consequential "bodily injury," arising out of one or more of the following offenses:

   a. False arrest, detention or imprisonment;

   b. Malicious prosecution or abuse of process;

   c. Wrongful eviction from, wrongful entry into, or the invasion of the right of private occupancy of a room, dwelling or premises that a person occupies committed by or on behalf of its owner, landlord or lessor;

   d. Discrimination, unless such insurance is prohibited by law;

   e. Oral or written publication, in any manner, of material that slanders or libels a person or organization or disparages a person's or organization's goods, products or services;

   f. Oral or written publication, in any manner, of material that violates a person's right of privacy;

   g. The use of another's advertising idea in your "advertisement;"

   h. Infringing upon another's copyright, trade dress or slogan in your "advertisement."

11. **a. "Products-completed operations hazard"** includes "bodily injury" and "property damage" occurring away from premises an insured owns or rents and arising out of "your product" or "your work" except:

      (1) Products in your physical possession; or

      (2) Work not yet completed or abandoned.

   b. "Your work" will be deemed completed at the earliest of the following:

      (1) When all work called for in the "insured contract" has been completed;

      (2) When all of the work to be done at the site has been completed if the "insured's contract" calls for work at more than one site; or

(3) When that part of the work done at a job site has been put to its intended use by a person or organization other than another contractor or subcontractor working on the same project. Work that may need:

(a) Service;

(b) Maintenance;

(c) Correction;

(d) Repair; or

(e) Replacement;

but which is otherwise complete, will be treated as completed.

c. This hazard does not include "bodily injury" or "property damage" arising out of:

(1) The transportation of property, unless the injury or damage arises out of a condition in or on a vehicle created by the "loading or unloading" of it; or

(2) The existence of:

(a) Tools;

(b) Uninstalled equipment; or

(c) Abandoned or unused materials.

12. "Property damage" means:

a. Physical injury to tangible property, including all resulting loss of use of that property. All such loss of use shall be deemed to occur at the time of the physical injury that caused it; or

b. Loss of use of tangible property that is not physically injured. All such loss shall be deemed to occur at the time of the occurrence that caused it.

For the purposes of this insurance, "electronic data" is not tangible property.

13. "Suit" means a civil proceeding in which damages because of:

a. "Bodily injury";

b. "Property damage"; or

c. "Personal and advertising injury";

to which this insurance applies are alleged. "Suit" includes:

a. An arbitration proceeding alleging such damages to which you must submit with our consent; or

b. Any other alternative dispute resolution proceeding in which such damages are claimed and to which you submit with our consent.

14. "Your product" means:

a. Any goods or products, other than real property, manufactured, sold, handled, distributed or disposed of by:

(1) You;

(2) Others trading under your name; or

(3) A person or organization whose business or assets you have acquired; and

b. Containers (other than vehicles), materials, parts or equipment furnished in connection with such goods or products.

"Your product" includes warranties or representations made with respect to the fitness, quality, durability, performance or use of "your product" and the providing of or failure to provide warnings or instructions.

"Your product" does not include vending machines or other property rented to or located for the use of others but not sold.

15. "Your work" means:

a. Work or operations performed by you or on your behalf; and

b. Materials, parts or equipment furnished in connection with such work or operations.

"Your work" includes warranties or representations made with respect to the fitness, quality, durability, performance or use of "your work" and the providing of or failure to provide warnings or instructions.

16. "Retained limit" means the amount stated as such in the Declarations. The "retained limit" is retained and payable by the insured as respects all "incidents" not covered by "scheduled underlying insurance" or by "unscheduled underlying insurance."

17. "Scheduled underlying insurance" means the insurance policies listed in the Schedule of Underlying Insurance including renewal or replacement of such contracts which are not more restrictive than those listed in the aforementioned Schedule of Underlying Insurance.

18. "Ultimate net loss"

a. "Ultimate net loss" means the actual damages the insured is legally obligated to pay, either through:

(1) Final adjudication on the merits; or

(2) Through compromise settlement with our written consent or direction;

because of "incident(s)" covered by this policy.

However, it includes the above mentioned sums only after deducting all other recoveries and salvages.

4002000897013027 4898952

b. "Ultimate net loss" does not include the following:

(1) Costs or expenses related to:

(a) Litigation,

(b) Settlement;

(c) Adjustment; or

(d) Appeals;

nor costs or expenses incident to the same which an "underlying insurer" has paid, incurred or is obligated to pay to or on behalf of the insured;

(2) Pre-judgment interest;

(3) Office costs and expenses and salaries and expenses of the employees of an insured;

(4) Our office costs and expenses and salaries of our employees; or

(5) General retainer and/or monitoring fees of counsel retained by the insured.

19. "Underlying insurer" means an insurer whose policy covers "bodily injury," "property damage" or "personal and advertising injury" also covered by this policy but does not include insurers whose policies were purchased specifically to be in excess of this policy. It includes all insurers providing:

a. "Unscheduled underlying insurance"; and

b. "Scheduled underlying insurance."

20. "Unscheduled underlying insurance"

a. "Unscheduled underlying insurance" means insurance policies available to an insured, whether:

(1) Primary;

(2) Excess;

(3) Excess-contingent; or

(4) Otherwise;

except the policies listed in the Schedule of Underlying Insurance.

b. "Unscheduled underlying insurance" does not include insurance purchased specifically to be excess of this policy.

21. "Watercraft" means a vehicle designed to transport persons or property in or on water.

22. "Authorized Insured" means any named insured or any employee authorized by a named insured to give or receive notice of a claim or "suit."

23. "Electronic data" means information, facts or programs stored as or on, created or used on, or transmitted to or from computer software, including systems and applications software, hard or floppy disks, CD-ROMS, tapes, drives, cells, data processing devices or any other media which are used with electronically controlled equipment.

24. "Pollutants" means any solid, liquid, gaseous or thermal irritant or contaminant, including smoke, vapor, soot, fumes, acids, alkalis, chemicals and waste. Waste includes materials to be recycled, reconditioned or reclaimed.

25. "Fungi or microbes" means:

a. Any form of fungus, yeast, mold, mildew, or mushroom, including mycotoxins, spores, scents, byproducts or other substances produced or released by fungi; and

b. Any bacteria, virus, or any other non-fungal, single celled or colony-form organism, including any toxins, scents, byproducts or other substances it produces or releases, whose injurious source is in or on a building or its contents.

But "fungi and microbes" does not include fungi that were deliberately grown for human consumption, microbes that were transmitted directly from person to person, or microbes that caused food poisoning, if your business is food processing, sales, or serving.

26. "Silica" means the chemical compound silicon dioxide (SiO2) in any form, including dust which contains "silica."

27. "Asbestos" means the mineral in any form whether or not the asbestos was at any time:

a. Airborne as a fiber, particle or dust;

b. Contained in or formed a part of a product, structure or other real or personal property;

c. Carried on clothing;

d. Inhaled or ingested; or

e. Transmitted by any other means.

28. "Volunteer worker" means a person who is not your employee, and who donates his or her work and acts at the direction of and within the scope of duties determined by you, and is not paid a fee, salary or other compensation by you or anyone else for their work performed for you.

SECTION VI – DEFENSE PAYMENT AND RELATED DUTIES

1. If a claim or "suit" alleges damages covered by underlying policies and the obligation of all "underlying insurers" either to:

a. Investigate and defend the insured; or

b. Pay the cost of such investigation and defense;

ceases solely through exhaustion of all underlying limits of insurance through payment of a combination

of covered expenses, settlements or judgments for "bodily injury," "property damage" or "personal and advertising injury" taking place during our policy period, then we will either:

a. Assume the investigation and defense of the insured against "suits" seeking damages; or

b. If we elect not to assume the investigation and defense in **1.a.** above, we will reimburse the insured for reasonable defense costs and expenses incurred with our written consent. However, such reimbursement excludes:

(1) Office expenses of the insured;

(2) Salaries and expenses of employees; and

(3) General retainer fees of counsel retained by the insured.

2. We will investigate and defend an insured or reimburse an insured for "suits" brought against an insured for a claim or "suit" that alleges damages because of "bodily injury," "property damage" or "personal and advertising injury" not covered under:

a. "Scheduled underlying insurance"; and

b. "Unscheduled underlying insurance";

but which seeks damages because of "bodily injury," "property damage" or "personal and advertising injury" otherwise covered under this policy. Costs and expanses of such investigation and defense are not subject to the "retained limit."

3. We will investigate and defend an insured or reimburse an insured for such costs of investigation and defense described in either **1.** or **2.** above, even if the allegations of a "suit" are:

a. Groundless;

b. False; or

c. Fraudulent;

but only until we make payment or offer to pay or deposit in court that part of judgment(s) not exceeding our limit of insurance.

4. We shall also have the sole right to make settlement of a "suit" as we deem expedient.

5. If not permitted by law or otherwise to perform these duties, we will pay an insured for defense costs and expenses incurred with our prior written consent.

6. Amounts we pay or incur pursuant to the obligation to defend or pay the costs and expenses of defense are in addition to, and not subject to, the limits of insurance stated in the Declarations.

7. In addition to our limits of insurance, we will pay prejudgment interest awarded against an insured on that part of a judgment covered by this policy. We will not pay prejudgment interest on that period of time after we offer to pay:

a. Our limit of insurance; or

b. That portion of our limit of insurance which equals the amount of a settlement demand when combined with the limits of "underlying insurers."

8. We will pay interest on a judgment that accrues after entry of that judgment, but before we have:

a. Paid;

b. Offered to pay; or

c. Deposited in court

that part of the judgment that is within the limit of insurance of this policy. The amount of interest we pay will be in direct proportion that amount we pay as damages bears to the total amount of judgment. We will not pay additional interest that accrues after we have:

a. Paid;

b. Offered to pay;

c. Deposited in court

that part of the judgment that is within the limit of insurance of this policy.

9. We will pay all reasonable expenses incurred by the insured at our request to assist us in the investigation or defense of the claim or "suit." This includes actual loss of earnings up to liability $250. a day because of time off from work.

NUCLEAR ENERGY LIABILITY EXCLUSION ENDORSEMENT (BROAD FORM)

It is agreed that:

I. This policy does not apply:

A. Under Liability Coverage to "bodily injury" "personal and advertising injury" or "property damage"

1. With respect to which an insured under this policy, is also an insured under a nuclear energy liability policy issued by the:

a. Nuclear Energy Liability Insurance Association;

b. Mutual Atomic Energy Liability Underwriters; or

c. Nuclear Insurance Association of Canada;

or any of their successors, or would be an insured under any such policy but for its

4002000897013027 4898953

termination upon exhaustion of its limit of liability; or

2. Resulting from the "hazardous properties" of "nuclear material" and with respect to which:

a. Any person or organization is required to maintain financial protection pursuant to the Atomic Energy Act of 1954, or any law or amendment thereof; or

b. The insured is, or had this policy not been issued would be, entitled to indemnity from the United States of America, or any agency thereof, under any agreement entered into by the United States of America, or any agency thereof, with any person or organization.

B. Under any Supplementary Payments provision relating to first aid, to expenses incurred with respect to "bodily injury" resulting from the "hazardous properties" of "nuclear material," and arising out of the operation of a "nuclear facility" by any person or organization.

C. Under any Liability Coverage, to "bodily injury" "personal and advertising injury" or "property damage" resulting from the "hazardous properties" of "nuclear material," if:

1. The "nuclear material":

a. Is at any "nuclear facility" owned by, or operated by or on behalf of, an insured; or

b. Has been discharged or dispersed therefrom;

2. The "nuclear material" is contained in "spent fuel" or "waste" at any time possessed, handled, used, processed, stored, transported or disposed of by or on behalf of an insured; or

3. The "bodily injury," "personal and advertising injury," or "property damage" arises out of the furnishing by an insured of services, materials, parts or equipment in connection with the:

a. Planning;

b. Construction;

c. Maintenance;

d. Operation; or

e. Use of

any "nuclear facility," but if such facility is located within the United States of America, its territories or possessions or Canada, this exclusion **(C.3.)** applies only to "property damage" to such "nuclear facility" and any property threat.

II. As used in this endorsement:

A. "Hazardous properties" include radioactive, toxic or explosive properties.

B. "Nuclear material" means "source material," "special nuclear material" or "byproduct material."

C. "Source material," "special nuclear material" and "by-product material" have the meanings given them in the Atomic Energy Act of 1954 or in any law amendatory thereof.

D. "Spent fuel" means any fuel element or fuel component, solid or liquid, which has been used or exposed to radiation in a "nuclear reactor."

E. "Waste" means waste material:

1. Containing "by-product material" other than the tailings or waste produced by the extraction or concentration of uranium or thorium from ore processed primarily for its "source material" content; and

2. Resulting from the operation by any person or organization, of a "nuclear facility" included within paragraphs **1.** and **2.** of the definition of "nuclear facility."

F. "Nuclear facility" means:

1. Any "nuclear reactor";

2. Any equipment or device designed or used for:

a. Separating the isotopes of uranium or plutonium;

b. Processing or utilizing "spent fuel"; or

c. handling, processing or packaging "waste";

3. Any equipment or device used for the processing, fabricating or alloying of special "nuclear material" if at any time the total amount of such material in the custody of the insured at the premises where such equipment is located consists of or contains more than:

a. 25 grams of plutonium or uranium 233 or any combination thereof; or

b. 250 grams of uranium 235;

4. Any structure, basin, excavation, premises or place prepared or used for the storage or disposal of "waste";

and includes the site on which any of the foregoing is located, all operations conducted on such site and all premises used for such operations.

G. "Nuclear reactor" means an apparatus designed or used to sustain nuclear fission in a self-supporting chain reaction or to contain a critical mass of fissionable material.

H. "Property damage" includes all forms of radioactive contamination of property.

4002000897013027 4898954

7013025936

BLANKET ADDITIONAL INSURED AND LIABILITY EXTENSION ENDORSEMENT

This endorsement modifies insurance provided under the following:

BUSINESSOWNERS LIABILITY COVERAGE FORM
BUSINESSOWNERS COMMON POLICY CONDITIONS

TABLE OF CONTENTS	
I.	**Blanket Additional Insured Provisions**
A.	**Additional Insured – Blanket Vendors**
B.	**Miscellaneous Additional Insureds**
C.	**Additional Provisions Pertinent to Additional Insured Coverage**
1.a.	**Primary – Noncontributory provision**
1.b.	**Definition of "written contract"**
2.	**Additional Insured – Extended Coverage**
II.	**Liability Extension Coverages**
A.	**Bodily Injury – Expanded Definition**
B.	**Broad Knowledge of Occurrence**
C.	**Estates, Legal Representatives and Spouses**
D.	**Fellow Employee First Aid**
E.	**Legal Liability – Damage to Premises**
F.	**Personal and Advertising Injury – Discrimination or Humiliation**
G.	**Personal and Advertising Injury – Broadened Eviction**
H.	**Waiver of Subrogation – Blanket**

I. BLANKET ADDITIONAL INSURED PROVISIONS

A. ADDITIONAL INSURED – BLANKET VENDORS

Who Is An Insured is amended to include as an additional insured any person or organization (referred to below as vendor) with whom you agreed under a "**written contract**" to provide insurance, but only with respect to "**bodily injury**" or "**property damage**" arising out of "**your products**" which are distributed or sold in the regular course of the vendor's business, subject to the following additional exclusions:

1. The insurance afforded the vendor does not apply to:

a. "**Bodily injury**" or "**property damage**" for which the vendor is obligated to pay damages by reason of the assumption of liability in a contract or agreement. This exclusion does not apply to liability for damages that the vendor would have in the absence of the contract or agreement;

b. Any express warranty unauthorized by you;

c. Any physical or chemical change in the product made intentionally by the vendor;

d. Repackaging, except when unpacked solely for the purpose of inspection, demonstration, testing, or the substitution of parts under instructions from the manufacturer, and then repackaged in the original container;

e. Any failure to make such inspections, adjustments, tests or servicing as the vendor has agreed to make or normally undertakes to make in the usual course of business, in connection with the distribution or sale of the products;

f. Demonstration, installation, servicing or repair operations, except such operations performed at the vendor's premises in connection with the sale of the product;

g. Products which, after distribution or sale by you, have been labeled or relabeled or used as a container, part or ingredient of any other thing or substance by or for the vendor; or

1002000457013601945436 9

Copyright, CNA All Rights Reserved.

h. "**Bodily injury**" or "**property damage**" arising out of the sole negligence of the vendor for its own acts or omissions or those of its employees or anyone else acting on its behalf. However, this exclusion does not apply to:

(1) The exceptions contained in Subparagraphs **d.** or **f.**; or

(2) Such inspections, adjustments, tests or servicing as the vendor has agreed to make or normally undertakes to make in the usual course of business, in connection with the distribution or sale of the products.

2. This insurance does not apply to any insured person or organization, from whom you have acquired such products, or any ingredient, part or container, entering into, accompanying or containing such products.

3. This provision **2.** does not apply to any vendor included as an insured by an endorsement issued by us and made a part of this Policy.

4. This provision **2.** does not apply if "**bodily injury**" or "**property damage**" included within the "**products-completed operations hazard**" is excluded either by the provisions of the Policy or by endorsement.

B. MISCELLANEOUS ADDITIONAL INSUREDS

1. **Who Is An Insured** is amended to include as an insured any person or organization (called additional insured) described in paragraphs **3.a.** through **3.j.** below whom you are required to add as an additional insured on this policy under a "**written contract**."

2. However, subject always to the terms and conditions of this policy, including the limits of insurance, we will not provide the additional insured with:

a. A higher limit of insurance than required by such "**written contract**;"

b. Coverage broader than required by such "**written contract**" and in no event greater than that described by the applicable paragraph a. through k. below; or

c. Coverage for "**bodily injury**" or "**property damage**" included within the "**products-completed operations hazard**." But this paragraph **c.** does not apply to the extent coverage for such liability is provided by paragraph **3.j.** below.

Any coverage granted by this endorsement shall apply only to the extent permitted by law.

3. Only the following persons or organizations can qualify as additional insureds under this endorsement:

a. Controlling Interest

Any persons or organizations with a controlling interest in you but only with respect to their liability arising out of:

(1) such person or organization's financial control of you; or

(2) Premises such person or organization owns, maintains or controls while you lease or occupy these premises;

provided that the coverage granted to such additional insureds does not apply to structural alterations, new construction or demolition operations performed by or for such additional insured.

b. Co-owner of Insured Premises

A co-owner of a premises co-owned by you and covered under this insurance but only with respect to the co-owners liability for "**bodily injury**," "**property damage**" or "**personal and advertising injury**" as co-owner of such premises.

c. Grantor of Franchise

Any person or organization that has granted a franchise to you, but only with respect to such person or organization's liability for "**bodily injury**," "**property damage**," or "**personal and advertising injury**" as grantor of a franchise to you.

Copyright, CNA All Rights Reserved.

d. Lessor of Equipment

Any person or organization from whom you lease equipment, but only with respect to liability for "**bodily injury**," "**property damage**" or "**personal and advertising injury**" caused in whole or in part by your maintenance, operation or use of such equipment, provided that the "**occurrence**" giving rise to such "**bodily injury**" or "**property damage**" or the offense giving rise to such "**personal and advertising injury**" takes place prior to the termination of such lease.

e. Lessor of Land

Any person or organization from whom you lease land, but only with respect to liability for "**bodily injury**," "**property damage**" or "**personal and advertising injury**" arising out of the ownership, maintenance or use of that specific part of the land leased to you, provided that the "**occurrence**" giving rise to such "bodily injury" or "**property damage**" or the offense giving rise to such "**personal and advertising injury**," takes place prior to the termination of such lease. The insurance hereby afforded to the additional insured does not apply to structural alterations, new construction or demolition operations performed by, on behalf of or for such additional insured.

f. Lessor of Premises

An owner or lessor of premises leased to you, or such owner or lessor's real estate manager, but only with respect to liability for "**bodily injury**," "**property damage**" or "**personal and advertising injury**" arising out of the ownership, maintenance or use of such part of the premises leased to you, and provided that the "**occurrence**" giving rise to such "**bodily injury**" or "**property damage**" or the offense giving rise to such "**personal and advertising injury**," takes place prior to the termination of such lease. The insurance hereby afforded to the additional insured does not apply to structural alterations, new construction or demolition operations performed by, on behalf of or for such additional insured.

g. Mortgagee, Assignee or Receiver

A mortgagee, assignee or receiver of premises but only with respect to such mortgagee, assignee, or receiver's liability for "**bodily injury**," "**property damage**" or "**personal and advertising injury**" arising out of the ownership, maintenance, or use of a premises by you.
This insurance does not apply to structural alterations, new construction or demolition operations performed by, on behalf of or for such additional insured.

h. State or Political Subdivisions

A state or government agency or subdivision or political subdivision that has issued a permit or authorization, but only with respect to such government agency or subdivision or political subdivision's liability for "**bodily injury**," "**property damage**" or "**personal and advertising injury**" arising out of:

(1) The following hazards in connection with premises you own, rent, or control and to which this insurance applies:

(a) The existence, maintenance, repair, construction, erection, or removal of advertising signs, awnings, canopies, cellar entrances, coal holes, driveways, manholes, marquees, hoistaway openings, sidewalk vaults, street banners, or decorations and similar exposures; or

(b) The construction, erection, or removal of elevators; or

(c) The ownership, maintenance or use of any elevators covered by this insurance; or

(2) The permitted or authorized operations performed by you or on your behalf. But the coverage granted by this paragraph does not apply to:

(a) "**Bodily injury**", "**property damage**" or "**personal and advertising injury**" arising out of operations performed for the state or government agency or subdivision or political subdivision; or

(b) "**Bodily injury**" or "**property damage**" included within the "**products-completed operations hazard**."

With respect to this provision's requirement that additional insured status must be requested under a "**written contract**," we will treat as a "**written contract**" any governmental permit that requires you to add the governmental entity as an additional insured.

1002000457013601945437O

Copyright, CNA All Rights Reserved.

i. Trade Show Event Lessor

With respect to your participation in a trade show event as an exhibitor, presenter or displayer, any person or organization whom you are required to include as an additional insured, but only with respect to such person or organization's liability for "**bodily injury**," "**property damage**," or "**personal and advertising injury**" caused by:

a. Your acts or omissions; or

b. Acts or omissions of those acting on your behalf;

in the performance of your ongoing operations at the trade show premises during the trade show event.

j. Other Person or Organization

Any person or organization who is not an additional insured under paragraphs **a.** through **i.** above. Such additional insured is an insured solely for "**bodily injury**," "**property damage**" or "**personal and advertising injury**" for which such additional insured is liable because of your acts or omissions.

The coverage granted by this paragraph does not apply to any person or organization:

(1) For "**bodily injury**," "**property damage**," or "**personal and advertising injury**" arising out of the rendering or failure to render any professional services;

(2) For "**bodily injury**" or "**property damage**" included in the "**products-completed operations hazard**." But this provision **(2)** does not apply to such "**bodily injury**" or "**property damage**" if:

(a) It is entirely due to your negligence and specifically results from your work for the additional insured which is the subject to the "**written contract**"; and

(b) The "**written contract**" requires you to make the person or organization an additional insured for such "**bodily injury**" or "**property damage**"; or

(3) Who is afforded additional insured coverage under another endorsement attached to this policy.

C. ADDITIONAL PROVISIONS PERTINENT TO ADDITIONAL INSURED COVERAGE

1. With respect only to additional insured coverage provided under paragraphs **A.** and **B.** above:

a. The **BUSINESSOWNERS COMMON POLICY CONDITIONS** are amended to add the following to the Condition entitled **Other Insurance**:

This insurance is excess of all other insurance available to an additional insured whether primary, excess, contingent or on any other basis. However, if a "**written contract**" requires that this insurance be either primary or primary and noncontributing, then this insurance will be primary and non-contributory relative solely to insurance on which the additional insured is a named insured.

b. Under **Liability and Medical Expense Definitions**, the following definition is added:

"**Written contract**" means a written contract or agreement that requires you to make a person or organization an additional insured on this policy, provided the contract or agreement:

(1) Is currently in effect or becomes effective during the term of this policy; and

(2) Was executed prior to:

(a) The "**bodily injury**" or "**property damage**;" or

(b) The offense that caused the "**personal and advertising injury**";

for which the additional insured seeks coverage.

2. With respect to any additional insured added by this endorsement or by any other endorsement attached to this Coverage Part, the section entitled **Who Is An Insured** is amended to make the following natural persons insureds.

If the additional insured is:

a. An individual, then his or her spouse is an insured;

Copyright, CNA All Rights Reserved.

b. A partnership or joint venture, then its partners, members and their spouses are insureds;

c. A limited liability company, then its members and managers are insureds;

d. An organization other than a partnership, joint venture or limited liability company, then its executive officers, directors and shareholders are insureds; or

e. Any type of entity, then its employees are insureds;

but only with respect to locations and operations covered by the additional insured endorsement's provisions, and only with respect to their respective roles within their organizations. Furthermore, employees of additional insureds are not insureds with respect to liability arising out of:

(1) "**Bodily injury**" or "**personal and advertising injury**" to any fellow employee or to any natural person listed in paragraphs **a.** through **d.** above;

(2) "**Property damage**" to property owned, occupied or used by their employer or by any fellow employee; or

(3) Providing or failing to provide professional health care services.

II. LIABILITY EXTENSION COVERAGES

It is understood and agreed that this endorsement amends the **Businessowners Liability Coverage Form**. If any other endorsement attached to this policy amends any provision also amended by this endorsement, then that other endorsement controls with respect to such provision, and the changes made by this endorsement to such provision do not apply.

A. Bodily injury – Expanded Definition

Under **Liability and Medical Expenses Definitions**, the definition of "**Bodily injury**" is deleted and replaced by the following:

"**Bodily injury**" means physical injury, sickness or disease sustained by a person, including death, humiliation, shock, mental anguish or mental injury by that person at any time which results as a consequence of the physical injury, sickness or disease.

B. Broad Knowledge of Occurrence

Under Businessowners Liability Conditions, the Condition entitled Duties In The Event of Occurrence, Offense, Claim or Suit is amended to add the following:

Paragraphs **a.** and **b.** above apply to you or to any additional insured only when such "**occurrence**," offense, claim or "**suit**" is known to:

(1) You or any additional insured that is an individual;

(2) Any partner, if you or an additional insured is a partnership;

(3) Any manager, if you or an additional insured is a limited liability company;

(4) Any "**executive officer**" or insurance manager, if you or an additional insured is a corporation;

(5) Any trustee, if you or an additional insured is a trust; or

(6) Any elected or appointed official, if you or an additional insured is a political subdivision or public entity.

This paragraph applies separately to you and any additional insured.

C. Estates, Legal Representatives and Spouses

The estates, heirs, legal representatives and spouses of any natural person insured shall also be insured under this policy; provided, however, coverage is afforded to such estates, heirs, legal representatives and spouses only for claims arising solely out of their capacity as such and, in the case of a spouse, where such claim seeks damages from marital common property, jointly held property, or property transferred from such natural person insured to such spouse. No coverage is provided for any act, error or omission of an estate, heir, legal representative or spouse outside the scope of such person's capacity as such, provided however that the spouse of a natural person Named Insured and the spouses of members or partners of joint venture or partnership Named Insureds are insureds with respect to such spouses' acts, errors or omissions in the conduct of the Named Insured's business.

10020004570136019454371

Copyright, CNA All Rights Reserved.

D. Fellow Employee First Aid Coverage

In the section entitled **Who Is An Insured**, paragraph **2.a.1.** is amended to add the following:

The limitations described in subparagraphs **2.a.1.(a)**, **(b)** and **(c)** do not apply to your "**employees**" for "**bodily injury**" that results from providing cardiopulmonary resuscitation or other first aid services to a co-"**employee**" or "**volunteer worker**" that becomes necessary while your "**employee**" is performing duties in the conduct of your business. Your "**employees**" are hereby insureds for such services. But the insured status conferred by this provision does not apply to "**employees**" whose duties in your business are to provide professional health care services or health examinations.

E. Legal Liability – Damage To Premises

1. Under **B. Exclusions, 1. Applicable to Business Liability Coverage**, Exclusion **k. Damage To Property**, is replaced by the following:

k. Damage To Property

"**Property damage**" to:

1. Property you own, rent or occupy, including any costs or expenses incurred by you, or any other person, organization or entity, for repair, replacement, enhancement, restoration or maintenance of such property for any reason, including prevention of injury to a person or damage to another's property;

2. Premises you sell, give away or abandon, if the "**property damage**" arises out of any part of those premises;

3. Property loaned to you;

4. Personal property in the care, custody or control of the insured;

5. That particular part of any real property on which you or any contractors or subcontractors working directly or indirectly in your behalf are performing operations, if the "**property damage**" arises out of those operations; or

6. That particular part of any property that must be restored, repaired or replaced because "**your work**" was incorrectly performed on it.

Paragraph **2** of this exclusion does not apply if the premises are "**your work**" and were never occupied, rented or held for rental by you.

Paragraphs **1**, **3**, and **4**, of this exclusion do not apply to "**property damage**" (other than damage by fire or explosion) to premises:

(1) rented to you:

(2) temporarily occupied by you with the permission of the owner, or

(3) to the contents of premises rented to you for a period of 7 or fewer consecutive days.

A separate limit of insurance applies to Damage To Premises Rented To You as described in Section D – Liability and Medical Expenses Limits of Insurance.

Paragraphs **3**, **4**, **5**, and **6** of this exclusion do not apply to liability assumed under a sidetrack agreement.

Paragraph **6** of this exclusion does not apply to "**property damage**" included in the "**products-completed operations hazard**."

2. Under **B. Exclusions**, **1. Applicable to Business Liability Coverage**, the following paragraph is added, and replaces the similar paragraph, if any, beneath paragraph **(14)** of the exclusion entitled **Personal and Advertising Injury**:

Exclusions **c, d, e, f, g, h, i, k, l, m, n, and o,** do not apply to damage by fire to premises while rented to you or temporarily occupied by you with permission of the owner or to the contents of premises rented to you for a period of 7 or fewer consecutive days. A separate limit of insurance applies to this coverage as described in **Section D. Liability And Medical Expenses Limits Of Insurance**.

Copyright, CNA All Rights Reserved.

3. The first Paragraph under item **5. Damage To Premises Rented To You Limit** of the section entitled **Liability And Medical Expenses Limits Of Insurance** is replaced by the following:

The most we will pay under Business Liability for damages because of "**property damage**" to any one premises, while rented to you or temporarily occupied by you with the permission of the owner, including contents of such premises rented to you for a period of 7 or fewer consecutive days, is the Damage to Premises Rented to You Limit. The Damage to Premises Rented to You Limit is the greater of:

a. $1,000,000; or

b. The Damage to Premises Rented to You Limit shown in the Declarations.

F. Personal and Advertising Injury – Discrimination or Humiliation

1. Under **Liability and Medical Expenses Definitions**, the definition of "**personal and advertising injury**" is amended to add the following:

h. Discrimination or humiliation that results in injury to the feelings or reputation of a natural person, but only if such discrimination or humiliation is:

(1) Not done intentionally by or at the direction of:

(a) The insured; or

(b) Any "**executive officer**," director, stockholder, partner, member or manager (if you are a limited liability company) of the insured; and

(2) Not directly or indirectly related to the employment, prospective employment, past employment or termination of employment of any person or person by any insured.

2. Under **B. Exclusions, 1. Applicable to Business Liability Coverage**, the exclusion entitled **Personal and Advertising Injury** is amended to add the following additional exclusions:

(15) Discrimination Relating to Room, Dwelling or Premises

Caused by discrimination directly or indirectly related to the sale, rental, lease or sub-lease or prospective sale, rental, lease or sub-lease of any room, dwelling or premises by or at the direction of any insured.

(16) Employment Related Discrimination

Discrimination or humiliation directly or indirectly related to the employment, prospective employment, past employment or termination of employment of any person by any insured.

(17) Fines or Penalties

Fines or penalties levied or imposed by a governmental entity because of discrimination.

3. This provision **(Personal and Advertising Injury – Discrimination or Humiliation)** does not apply if **Personal and Advertising Injury** Liability is excluded either by the provisions of the Policy or by endorsement.

G. Personal and Advertising Injury - Broadened Eviction

Under **Liability and Medical Expenses Definitions**, the definition of "**Personal and advertising injury**" is amended to delete Paragraph c. and replace it with the following:

c. The wrongful eviction from, wrongful entry into, or invasion of the right of private occupancy of a room dwelling or premises that a person or organization occupies committed by or on behalf of its owner, landlord or lessor.

H. Waiver of Subrogation – Blanket

We waive any right of recovery we may have against:

a. Any person or organization with whom you have a written contract that requires such a waiver.

All other terms and conditions of the Policy remain unchanged.

10020004570136019454372

Copyright, CNA All Rights Reserved.

WAIVER OF OUR RIGHT TO RECOVER FROM OTHERS ENDORSEMENT

We have the right to recover our payments from anyone liable for an injury covered by this policy. We will not enforce our right against the person or organization named in the Schedule. (This agreement applies only to the extent that you perform work under a written contract that requires you to obtain this agreement from us.)

This agreement shall not operate directly or indirectly to benefit anyone not named in the Schedule.

Schedule

BLANKET AS REQUIRED BY WRITTEN CONTRACT

This endorsement changes the policy to which it is attached and is effective on the date issued unless otherwise stated.
(The information below is required only when this endorsement is issued subsequent to preparation of the policy.)
Endorsement Effective 12/1/2023 Policy No. 7013027475 Endorsement No.

Insured
Vertosoft LLC

Premium $

Insurance Company
CNA

Countersigned by Patrick M. Sa

Copyright 1983 National Council on Compensation Insurance.

General Services Administration

Information Technology

Federal Supply Schedule Price List

Contract Number: GS-35F-688GA

MOD 0037

Period Covered by Contract:

September 19, 2017 to September 18, 2027

Contractor:

Vertosoft LLC
1602 Village Market Blvd SE, Suite 320
Leesburg, VA 20175
Certified Small Business Concern
703-568-4703
www.vertosoft.com

AUTHORIZED
INFORMATION TECHNOLOGY SCHEDULE PRICELIST
GENERAL PURPOSE COMMERCIAL INFORMATION TECHNOLOGY
EQUIPMENT, SOFTWARE AND SERVICES

SPECIAL ITEM NUMBER 518210C- Cloud Computing Services:

Includes commercially available cloud computing services such as Infrastructure as a Service (IaaS), Platform as a Service (PaaS), and Software as a Service (SaaS) and emerging cloud services. The new Cloud SIN is open to all deployment models (private, public, community or hybrid).

FSC/PSC Class D305 IT AND TELECOM- TELEPROCESSING, TIMESHARE, AND CLOUD COMPUTING

Cloud Computing Services

SPECIAL ITEM NUMBER 54151 - MAINTENANCE OF SOFTWARE AS A SERVICE

Software maintenance as a service creates, designs, implements, and/or integrates customized changes to software that solve one or more problems and is not included with the price of the software. Software maintenance as a service includes person-to-person communications regardless of the medium used to communicate: telephone support, on-line technical support, customized support, and/or technical expertise which are charged commercially.

Software maintenance as a service is billed arrears in accordance with 31 U.S.C. 3324.

SPECIAL ITEM NUMBER 511210 - PERPETUAL SOFTWARE LICENSES

Software maintenance as a product includes the publishing of bug/defect fixes via patches and updates/upgrades in function and technology to maintain the operability and usability of the software product. It may also include other no charge support that are included in the purchase price of the product in the commercial marketplace. No charge support includes items such as user blogs, discussion forums, on-line help libraries and FAQs (Frequently Asked Questions), hosted chat rooms, and limited telephone, email and/or web-based general technical support for user's self diagnostics.
Software maintenance as a product does NOT include the creation, design, implementation, integration, etc. of a software package. These examples are considered software maintenance as a service.

FSC CLASS 7030 - INFORMATION TECHNOLOGY SOFTWARE
- Large Scale Computers
  - Operating System Software
  - Application Software
  - Electronic Commerce (EC) Software
  - Utility Software
  - Communications Software
  - Core Financial Management Software
  - Ancillary Financial Systems Software
  - Special Physical, Visual, Speech, and Hearing Aid Software
- Microcomputers

Operating System Software
Application Software
Electronic Commerce (EC) Software
Utility Software
Communications Software
Core Financial Management Software
Ancillary Financial Systems Software
Special Physical, Visual, Speech, and Hearing Aid Software

Contractor Information:

Vertosoft LLC

1602 Village Market Blvd SE, Suite 320

Leesburg, VA 20175

Certified Small Business Concern

703-568-4703

www.vertosoft.com

Contract Number: GS-35F-688GA

Period Covered by Contract:

September 19, 2017 to September 18, 2027

General Services Administration
Federal Acquisition Service

Products and ordering information in this Authorized Information Technology Schedule Pricelist are also available on the GSA Advantage! System (http://www.gsaadvantage.gov).

JURGENS, TAYLOR R.

From: DUTTON-LEYDA, TRAVIS K.
Sent: Monday, November 25, 2024 8:55 AM
To: JURGENS, TAYLOR R.
Cc: Purchasing DET
Subject: RE: Request for Determination for New Asset Management Software

Taylor, 13-1-129 is correct. And the unfortunate thing about the City's templates neither template adequately works for software purchases. We had a team working on new templates, but the work has gone dormmate.

Greetings,

The scope of work as written would be General Services. This determination relates only to that question and is no comment on whether the scope of work or procurement method meet all legal standards. I reserve the right to change this determination if the scope of work differs from the scope of work submitted for the original determination. This procurement must be conducted using the processes and procedures set forth by the City of Santa Fe, Central Purchasing, the Procurement Manual, and state statutes.

Please note:

- Save this email as a PDF and upload it into the corresponding Munis records.
- Check with WorkQuest dba Horizons of New Mexico (vendor # 8673) (mloehman@horizonsofnewmexico.org) if this service appears on their approved list.
- If your request includes anything that needs to be reviewed and preapproved by another City Department/Division, please send the same SOW to the corresponding email address and include their response in your packet/Munis.

  -IT components (anything IT) - ereview@santafenm.gov

  -Vehicles – dmjaramillo@santafenm.gov

  -Grants - mtbonifer@santafenm.gov; cmthompson@santafenm.gov; evlujan@santafenm.gov

  - Construction, Facilities, Furniture, Fixtures, Equipment, etc. - jsburnett@santafenm.gov

  -Emergency Related Purchases - bgwilliams@santafenm.gov

  -Asset over $5k - lmstorey@santafenm.gov

- Ensure that the appropriate templates and forms are used https://intranet.santafenm.gov/finance_1 and documented procedures/laws/rules are followed.
- > $20k per year, when processing this procurement, please ensure the procurement number issued by Munis and the procurement name are used in the appropriate documents and the subject of emails.
- If you are processing a procurement where the forecasted amount is =/> $60k, per NMSA 1978, Section 13-1-102, the procurement method must be ITB (if you choose not to use a cooperative or an existing contract). If you feel you need to process an RFP, you must get an Authorization and Plan approved before you process.

- < $20k per year, one quote is acceptable.
- From $20k to $60k per year, if you aren't using a cooperative or existing contract, you'll need to provide 3 quotes in your req. Must use the Munis Bid Module after 12/21/2023.
- Please keep this as part of the procurement file for future reference.
- Figure out your funding source and **inform Purchasing**. To ensure that the proper documents and language are used, it is important to identify the funding source for the subsequent contract. For instance, if federal funds are involved, the procurement request and subsequent contract must include the necessary federal language. Therefore, it is crucial to determine the funding source beforehand.
- Please review the pages linked below to determine whether any of the existing contracts/price agreements or cooperative agreements are applicable to this request. You might be able to use an existing price agreement to save time and money.
    - https://www.generalservices.state.nm.us/state-purchasing/statewide-price-agreements/ (if you choose to use a Statewide, you do not need to ask Horizons if they can do the work. State Purchasing must offer the SOW to Horizons prior to placing the award on their website.)
    - https://naspovaluepoint.org/categories/
    - https://www.omniapartners.com/publicsector/contracts
    - https://www.buyboard.com/home.aspx
    - https://www.h-gac.com/Home
    - https://www.gsaelibrary.gsa.gov/
    - https://www.sourcewell-mn.gov/contract-search

- Submit or send your request to the appropriate MS Teams channel or email address:
    - RFPs requests to https://teams.microsoft.com/l/channel/19%3ad63b9c8b586d424fa5eed34177146ac5%40thread.tacv2/RFP%2520Requests?groupId=a367d8c2-992f-4c74-8e7d-0ccb6950c9a1&tenantId=77b69f5a-55ed-4363-8616-4867b0bc707f
    - ITBs requests to https://teams.microsoft.com/l/channel/19%3a48e1e4588c0440a09cfbd9b907ed42d4%40thread.tacv2/ITB%2520Requests?groupId=a367d8c2-992f-4c74-8e7d-0ccb6950c9a1&tenantId=77b69f5a-55ed-4363-8616-4867b0bc707f
    - Determination requests to purchasing_det@santafenm.gov
    - And all other requests to purchasing@santafenm.gov

Thank you for submitting this scope of work for my review.

Regards,

Travis Dutton-Leyda
Chief Procurement Officer
City of Santa Fe
200 Lincoln Avenue
Santa Fe, NM 87501
505-629-8351
tkduttonleyda@santafenm.gov

https://santafenm.gov/finance-2/purchasing-1

Vendor Registration and Current Procurement Opportunities:
https://cityofsantafenmvendors.munisselfservice.com/Vendors/VBids/SearchResults.aspx

Internal Link: https://intranet.santafenm.gov/finance_1

From: JURGENS, TAYLOR R. <trjurgens@santafenm.gov>
Sent: Wednesday, November 20, 2024 11:41 AM
To: Purchasing DET <purchasing_det@santafenm.gov>
Cc: DUTTON-LEYDA, TRAVIS K. <tkduttonleyda@santafenm.gov>
Subject: RE: Request for Determination for New Asset Management Software

Good Morning All,

I'm following up with a question on the previous determination that was made on our asset management software procurement (see below). We were planning to procure the software via an Omnia agreement; however, we will now be procuring via GSA agreement instead. The GSA Contract No. that we will be using is GS-35F-688GA. I believe this would now fall under Section 13-1-129 NMSA 1978 instead of 13-1-135, correct? The Scope of Work will generally be the same, although we have added Public Works to the procurement as well. Attached is the original determination request email that includes a description of the Scope of Work.

You previously determined that this was Professional Services, but because it contains a software product would it be General Services/Software?

Let me know if you have any questions. Happy to schedule a quick call to discuss further.

Thanks,
Taylor

Taylor Jurgens, P.E.
Engineer | City of Santa Fe Water
505-955-4265 | trjurgens@santafenm.gov

From: DUTTON-LEYDA, TRAVIS K. <tkduttonleyda@santafenm.gov>
Sent: Wednesday, August 7, 2024 10:43 PM
To: JURGENS, TAYLOR R. <trjurgens@santafenm.gov>
Cc: Purchasing DET <purchasing_det@santafenm.gov>
Subject: Re: Request for Determination for New Asset Management Software

This remains to be professional and you can use the statute NMSA 1978, section 13 – 1– 135 if the cooperative contract expires in the future. Please keep all the proposals, RFP, contract, contract amendments, and evaluation committee report in the Munis contract record.

Thank you.

Regards,

Travis Dutton-Leyda
Chief Procurement Officer

City of Santa Fe
200 Lincoln Avenue
Santa Fe, NM 87501
505-629-8351
tkduttonleyda@santafenm.gov

https://santafenm.gov/finance-2/purchasing-1



Vision without action is merely a dream.
Action without vision passes the time.
Vision with action can change the world. ~ Joel A. Barker

On Aug 7, 2024, at 5:10 PM, JURGENS, TAYLOR R. <trjurgens@santafenm.gov> wrote:

Good Afternoon,

I'm following up on a previous request for determination that we made for a new asset management software last year. Attached is the determination email that was provided by Travis in response to our request which identified it as Professional Services. At the time of the initial request, we were planning on using the RFP procurement method. However, we are now planning to use a cooperative agreement through Omnia. By changing the procurement method, do we need a new request for determination?

The scope of work remains the same as it was in the original request for determination (see attached email chain); however, we have expanded it to include the Wastewater Division and BDD as well. The budget is ~$275k for the first year.

The Omnia agreement we plan to use is Contract #01-165. The documentation for this contract is at the link below.

https://www.omniapartners.com/suppliers/vertosoft/public-sector/contract-documents#contract-1834

Please provide direction on whether a new determination is required. Let me know if you have any questions or need additional information at this time.

Thanks,
Taylor

Taylor Jurgens, P.E.
Engineer
City of Santa Fe Water
Office 505-955-4265
Web www.santafenm.gov/water_division
Email trjurgens@santafenm.gov

Pre-screening questions for Software/Solution Replacement Request

Information about the Existing System/Solution:

1. Name of the solution you are trying to replace Allmax Antero
   (version/module) (2 different versions) & Maintenance Connection
2. Number of current users Approximately 100 (includes unlimited)
3. Who is responsible for updating / troubleshooting the current solution?
   - ☐ ITT Representative (division/position/name/contact info): _____
   - ☐ Vendor (name / contact info): _____
   - ■ City Department's representative (name/contact info): _____
   - ☐ 3rd Party Contractor (name/contact info): _____
   - ☐ Other: (Company/name/contact/allocated hours/mo): _____
4. Is the current system hosted in the cloud or locally by the City:
   - ☐ Hosted on ITT servers (name and location): Locally
   - ☐ Hosted on Cloud (provider name and link): _____
5. What are main features you are utilizing with the current software:
   Asset Management and Trouble Ticketing
6. Describe the limitations of the current software that new proposed solution will remedy:
   Locally Hosted systems that have limited user licenses and are sold for each Plant
7. What is the extent of the data that will be transferred to the new solution from the current solution:
   - ■ All the data will be transferred and deleted from existing accounts;
   - ☐ Only partial/or no data will be transferred, and the data will be backed up into local drive. (where?)_____
   - ☐ No data will be transferred and backed up, and
8. Will there need to be an archival copy of the current solution maintained?
   - ☐ Yes (if yes – by who, and how long):_____
   - ■ No There is no intention of running an archival solution, as all curre
   - ☐ Uknown (specify): _____

Information about the Proposed System/Solution:

9. Name of the solution/software you are interested in purchasing: Cartegraph
   (version/module):_____
10. What is the goal of the requested application? _____
11. Number of users that will be utilizing the system and will need licenses: 100
12. How many users will be covered by current quote?: Unlimited
13. Single sign on – is this solution capable of:
    - ☐ Azure Entra ID SAML
    - ■ Azure Entra ID OAUTH2
    - ■ Other SSO: _____
14. Will the new solution be hosted:
    - ☐ Locally (address): _____
    - ■ or in the Cloud (address): Cartegraph
15. Will the updates to the new system/solution be performed by:
    - ☐ City staff (Name/position/division): _____
    - ■ or the Vendor (assigned staff): Updates will be performed by Cartegraph
16. What existing IT systems, if any, does this solution need to connect to?:
    - ■ Email Optional if notifications are need
    - ☐ Network
    - ■ GIS portal/databases* SCADA Historians if yes answer GIS Module

    (specify)_____
17. Who will be responsible for installing and configuring the new solution and transferring existing data from the current solution?
    - ☐ ITT Representative (division/name/contact info):_____
    - ■ Vendor (name / contact info): Dalton Gilbert (dgilbert@opengov.com)_____
    - ■ City Department's representative (name/contact info): Taylor Jurgens (trjurgens@santafenm.gov)_
    - ☐ 3rd Party Contractor (name/contact info): _____
    - ☐ Other: (Company/name/contact/allocated hours/mo): _____
18. What is the estimated timeframe for standing up this new solution, and transferring from the current solution to the new solution?

Unknown	Under 3 months	3 to 6 months	6-12 months	More than 1 yrs	Other:
☐	☐	☐	☑	☐	7-8 months usual

19. How or who handles any requests for support for the requested application?
Life support technician 7am 6pm central time, have FAQ and training,

20. What level of support is provided by the vendor for this new system/solution, and what are the applicable SLAs?

No Vendor Support ☐	Limited to # hours: _____ ☐	Unlimited Business Hours ☐	Unlimited 24/7 ☐	Other: anyone in SCF can call 6am -7pm central time

Please include Service Level Agreement details anyone in SCF can call 6am -7pm central time

21. Vendors contact information for technical questions regarding this new solution:
Dalton Gilbert 909-630-2408, dgilbert@opengov.com, City will have more contacts later

22. Does the requested application require any specific browser, plugin, security setting, network setting, hardware or setting?
Does not require any specific browser, just URL no special plug in needded,

23. Is there different level of access to the requested application? If so, how is access handled?
Every ones in the system has role and secured based permissions, role based - fully customizable - based on creating, deleting and viewings

ITT GIS Discovery questions

24. Will you require APA/Map service? No

25. Who is your City GIS Contact?: Rachel Salazar within Water Engineering Section

26. List of data needed for map service: Water infrastructure GIS layers (water mains, hydrants, valves, etc.)
We already have all this data in our GIS system.

27. Is there a data that needs to be reconciled back into City GIS databases?: No

28. Will you need City GIS Team to create you field app/ dashboards/ additional services? No

29. Will you require City's Esri Licenses and how many?: TBD - only if user is making updates to GIS-enabled fields in Cartegraph

30. Will this affect City's ESRI service agreement in any way?: No

For ITT Only (End of discovery results):

A. Will this implementation require ITT resources?

☐ Yes (requires CCB) ☑ No

B. Will this implementation and management require ITT staff hours?

☐ Yes (requires CCB) ☑ No

C. Was the requested software vetted by ITT Security officer?

☑ Yes ☐ No (requires CCB)

D. Does the requested solution have Single Sign enabled?

☑ Yes ☐ No (requires CCB)

E. Are the deliverables for this solution already exist in City's EAS Library (or is this solution can be substituted by existing City of Santa Fe solution?)

☐ Yes (requires CCB) ☑ No

Request Approved? ■ **Yes** ☐ **No** (requires CCB)

Approver's Name/ Signature: Zarifa Dushdurova Digitally signed by Zarifa Dushdurova Date: 2024.10.03 13:47:48 -06'00' Date: 10/3/24

JURGENS, TAYLOR R.

From: Matt Loehman <mloehman@horizonsofnewmexico.org>
Sent: Tuesday, June 6, 2023 12:10 PM
To: JURGENS, TAYLOR R.
Subject: Re: Water Division Enterprise Asset Management Software and Implementation Services Scope of Work

CAUTION: This email originated from outside of the organization. Do not click links or open attachments unless you recognize the sender and know the content is safe.

You are welcome, Taylor.

Matt

Matt Loehman
Executive Director

Horizons of New Mexico
6121 Indian School Rd. NE, Suite 102
Albuquerque, NM 87110

office phone: (505) 345-1540
email: mloehman@horizonsofnewmexico.org
web: www.horizonsofnewmexico.org

The State Use Act helps people with disabilities become gainfully employed, and it saves you valuable time and resources otherwise used during the procurement process.

On Tue, Jun 6, 2023 at 11:59 AM JURGENS, TAYLOR R. <trjurgens@santafenm.gov> wrote:

> Thank you for confirming, Matt.
>
> Taylor
>
> 
>
>
> **Taylor Jurgens, P.E.**
>
> Engineer
>
> City of Santa Fe Water
>
> **Office** 505-955-4265

Web
www.santafenm.gov/water_division

Email trjurgens@santafenm.gov

From: Matt Loehman <mloehman@horizonsofnewmexico.org>
Sent: Friday, June 2, 2023 9:29 AM
To: JURGENS, TAYLOR R. <trjurgens@santafenm.gov>
Subject: Re: Water Division Enterprise Asset Management Software and Implementation Services Scope of Work

CAUTION: This email originated from outside of the organization. Do not click links or open attachments unless you recognize the sender and know the content is safe.

Good morning,

Thank you very much for the opportunity, but we will decline this procurement.

Best regards,

Matt

Matt Loehman

Executive Director

Horizons of New Mexico

6121 Indian School Rd. NE, Suite 102

Albuquerque, NM 87110

office phone: (505) 345-1540

email: mloehman@horizonsofnewmexico.org

web: www.horizonsofnewmexico.org

The State Use Act helps people with disabilities become gainfully employed, and it saves you valuable time and resources otherwise used during the procurement process.

On Fri, Jun 2, 2023 at 8:51 AM JURGENS, TAYLOR R. <trjurgens@santafenm.gov> wrote:

> Good Morning,
>
> The City of Santa Fe Water Division is planning on issuing an RFP for a new Enterprise Asset Management Software along with implementation services for the software, but before issuing an RFP I wanted to reach out to give Horizons the right of first refusal for this Scope of Work. The detailed Scope

of Work is attached for your reference. I also included a high-level summary of the Scope of Work below.

- Scope of Work:
    - Vendor shall provide a cloud-based enterprise asset management software for use by the City of Santa Fe Water Division.
    - The software will be used for maintenance management, work order management, asset life cycle cost analysis, asset risk and criticality assessment, capital improvement project planning support, and water system performance reporting among other functions.
    - The software shall be capable of managing both vertical and horizontal assets in the City's water system.
    - The software shall have out of the box compatibility with ESRI GIS and shall have a mobile application in addition to the cloud-based desktop solution.
    - The software vendor shall provide professional services including software implementation, integration with other software currently used within the City as identified in the RFP, and training and support for City staff.

Please let me know whether you are interested in and capable of providing this Scope of Work or whether you decline the work. Feel free to reach out with any questions.

Thank you!

Taylor

Taylor Jurgens, P.E.

Engineer

City of Santa Fe Water

Office 505-955-4265

Web
www.santafenm.gov/water_division

Email trjurgens@santafenm.gov

GB 550 Vertosoft LLC GS-35F-688GA GSA

Final Audit Report 2025-01-13

Created:	2025-01-13
By:	JAMES EDWARDS (jwedwards@santafenm.gov)
Status:	Canceled / Declined
Transaction ID:	CBJCHBCAABAAtDsAX61FSsl5tLdnGiGSMM3JOBnRLJBz

"GB 550 Vertosoft LLC GS-35F-688GA GSA" History

Document created by JAMES EDWARDS (jwedwards@santafenm.gov)
2025-01-13 - 3:04:48 PM GMT- IP address: 97.182.206.186

Document sent to ALEXIS LOTERO (aclotero@santafenm.gov) and ajhopkins@santafenm.gov ajhopkins@santafenm.gov (ajhopkins@santafenm.gov) for signature. One of them to sign
2025-01-13 - 3:10:59 PM GMT

Email viewed by ajhopkins@santafenm.gov ajhopkins@santafenm.gov (ajhopkins@santafenm.gov)
2025-01-13 - 4:40:59 PM GMT- IP address: 104.47.65.254

Document declined by ajhopkins@santafenm.gov ajhopkins@santafenm.gov (ajhopkins@santafenm.gov)
Decline reason: Dept Director signature is missing.
2025-01-13 - 4:42:42 PM GMT- IP address: 63.232.20.2

Powered by Adobe Acrobat Sign

CITY OF SANTA FE

Date: **January 9, 2025**

To: **Governing Body**

Via: **Jesse Roach, Interim Public Utilities Director** JR
Regina Wheeler, Public Works Director RW

From: **P. Fred Heerbrandt, P.E., Engineer Supervisor** FH

Subject: **Jemez Road Public Sewer Extension Legislative Grant Agreement**

ACTION:
Request for Approval of the State of New Mexico Department of Environment Capital Appropriation Project Agreement SAP22-G2419-STB in the Total Amount of $400,000 for the Jemez Road Sewer Line Extension with a Reversion Date of June 30, 2026. (P. Fred Heerbrandt, P.E. Engineer Supervisor; pfheerbrandt@santafenm.gov)

1. Approval of a Budget Amendment Resolution (BAR) to Allocate $400,000 from the Capital Appropriation Grant to FY25 Revenue and Expenses for the Jemez Road Sewer line Project.

BACKGROUND AND SUMMARY:
In an effort to address inadequate and failing on-lot septic systems along Jemez Road, the City submitted a request for funds to the legislature for construction of a public sewer extension along Jemez Road, south of Airport Road. The project will include a new sewer main, sewer laterals to the residents' property lines, and road restoration after construction. Design is expected to be completed in 6 months and will be followed by procurement and then construction taking approximately 6 months after award. The total project cost estimate is $600,000 to be funded by this grant and a 2024 legislative grant for $210,000.

ATTACHMENTS:
Grant Agreement SAP22-G2419-STB
Excerpt Resolution 2024-48 Authorizing the Assignment of Officers and Agents for SAP22-G2419-STB
BAR
Project Ledger Request Form

FUNDING SOURCE: New Mexico Department of Finance and Administration
Fund Name/Number: WWM / 500
Munis Org Name/Number: WWM CIP / 5000375
Munis Revenue Object Name/Number: NM DFA / 490190
Munis Expenditure Object Name/Number: WIP Construction / 572970

PROCUREMENT METHOD:
This is a Grant Agreement. No procurement required.

Chief Procurement Officer Approval: n/a **Date:** _____
Comment/Exceptions: _____

Supporting Information:

CONTRACT NUMBER:
Grant Agreement # SAP22-G2419-STB

$$$$$ SOURCE/REVENUE: ☐**Expense** ☒**Revenue**
If the project is grant funded? List grant award number*:* *SAP22-G2419-STB*

Grant Manager / Accounting Officer Approval: Erika Lujan Erika Lujan (Jan 9, 2025 15:35 MST) **Date:** Jan 9, 2025
Comment/Exceptions: _____

Project Ledger #: WWM2433001

Budget Officer Approval: Andy Hopkins **Date:** Jan 9, 2025
Comment/Exceptions: _____

CAPITAL ASSET (will this procurement result in a tangible item that costs more than $5,000?):
☐**Yes |** ☒ **No**
 # (if known): _____

Repair or Replacement of Existing Equipment:

☐**Yes |** ☒ **No**
If yes -> ☐**Repair |** ☐ **Replacement**
Please explain: NA

Capital Project:
(New and improvement projects that are going to cost $10,000 or more)
☒ **Yes |** ☐ **No**

Project Ledger #: WWM2433001

Anticipated length of project: 18 months

Asset Manager Approval: _____ **Date:** _____
Comment/Exceptions: _____

Department Approvals:
IT Components: ☐ **Yes |** ☒ **No**
Vehicles: ☐ **Yes |** ☒ **No**
Facilities, Furniture, Fixtures, Equipment: ☐ **Yes |** ☒ **No**

Approval:_____ **Title:**_____ **Date**:_____
Approval:_____ **Title:**_____ **Date**:_____
Comment & Exceptions:_____

STATE OF NEW MEXICO
DEPARTMENT OF ENVIRONMENT
FUND CAPITAL APPROPRIATION PROJECT
JEMEZ RD CONSTRUCT
SAP 22-G2419-STB

THIS AGREEMENT between the New Mexico Environment Department hereinafter called the "Department" or NMED, and City of Santa Fe, hereinafter called the "Grantee" becomes effective on the date signed by the NMED.

RECITALS

WHEREAS, in the Laws of 2022, Chapter 53, Section 22, Subsection 118, the Legislature made an appropriation to the Department, funds from which the Department is making available to the Grantee pursuant to this Agreement; and

WHEREAS, the Department is granting to Grantee, and the Grantee is accepting the grant of, funds from this appropriation, in accordance with the terms and conditions of this Agreement; and

WHEREAS, NMED is empowered pursuant to Section 74-1-6 B, NMSA 1978 to contract in its own name.

AGREEMENT

NOW, THEREFORE, in consideration of the mutual covenants and obligations contained herein, the parties hereby mutually agree as follows:

ARTICLE I. PROJECT DESCRIPTION, AMOUNT OF GRANT AND REVERSION DATE

A. The project that is the subject of this Agreement is described as follows:

SAP 22-G2419-STB $400,000.00 APPROPRIATION REVERSION DATE: June 30, 2026

Laws of 2022, Chapter 53, Section 22, Subsection 118, Four Hundred Thousand Dollars, ($400,000.00), for:

to plan, design and construct improvements on Jemez road, including a sewer line south of Airport road, to improve residential septic systems in Santa Fe in Santa Fe county

The Grantee's total reimbursements shall not exceed Four Hundred Thousand Dollars, $400,000.00 (the "Appropriation Amount") minus the allocation for Art in Public Places ("AIPP amount")[1], if applicable, No Dollars, $0.00, which equals Four Hundred Thousand Dollars, $400,000.00 (the "Adjusted Appropriation Amount").

[1] The AIPP amount is "an amount of money equal to one percent or two hundred thousand dollars ($200,000), whichever is less, of the amount of money appropriated for new construction or any major renovation exceeding one hundred thousand dollars ($100,000)." Section 13-4A-4 NMSA 1978.

In the event of a conflict among the Appropriation Amount, the Reversion Date, as defined herein and/or the purpose of the Project, as set forth in this Agreement, and the corresponding appropriation language in the laws cited above in this Article I(A), the language of the laws cited herein shall control.

This project is referred to throughout the remainder of this Agreement as the "Project"; the information contained in Article I(A) is referred to collectively throughout the remainder of this Agreement as the "Project Description." The Special Conditions Attachment may set forth additional or more stringent requirements and conditions, which are incorporated by this reference as if set forth fully herein. If the Special Conditions Attachment imposes more stringent requirements than any requirement set forth in this Agreement, the more stringent requirements of the Attachment shall prevail, in the event of irreconcilable conflict. The Grantee shall reference the Project's number in all correspondence with and submissions to the Department concerning the Project, including, but not limited to, Requests for Payment and reports.

ARTICLE II. LIMITATION ON DEPARTMENT'S OBLIGATION TO MAKE GRANT DISBURSEMENT TO GRANTEE

A. Upon the Effective Date of this Agreement, for permissible purposes within the scope of the Project Description, the Grantee shall only be reimbursed monies for which the Department has issued and the Grantee has received a Notice of Department's Obligation to Reimburse[2] Grantee (hereinafter referred to as "Notice of Obligation"). This Grant Agreement and the disbursement of any and all amounts of the above referenced Adjusted Appropriation Amount are expressly conditioned upon the following:

(i) Irrespective of any Notice of Obligation, the Grantee's expenditures shall be made on or before the Reversion Date and, if applicable, an Early Termination Date (i.e., the goods have been delivered and accepted or the title to the goods has been transferred to the Grantee and/or the services have been rendered for the Grantee); and

(ii) The total amount received by the Grantee shall not exceed the lesser of: (a) the Adjusted Appropriation Amount identified in Article I(A) herein or (b) the total of all amounts stated in the Notice(s) of Obligation evidencing that the Department has received and accepted the Grantee's Third Party Obligation(s), as defined in subparagraph iii of this Article II(A); and

(iii) The Grantee's expenditures were made pursuant to the State Procurement Code and execution of binding written obligations or purchase orders with third party contractors or vendors for the provision of services, including professional services, or the purchase of tangible personal property and real property for the Project, hereinafter referred to as "Third Party Obligations"; and

(iv) The Grantee's submittal of timely Requests for Payment in accordance with the procedures set forth in Article IX of this Agreement; and

(v) In the event that capital assets acquired with Project funds are to be sold, leased, or licensed to or operated by a private entity, the sale, lease, license, or operating agreement:

   a. must be approved by the applicable oversight entity (if any) in accordance with law; or
   b. if no oversight entity is required to approve the transaction, the Department must approve the transaction as complying with law.

Prior to the sale, lease, license, or operating agreement being approved pursuant to Articles II(A)(v)(a) and II(A)(v)(b) herein, the Department may, in its sole and absolute discretion and unless inconsistent with State Board of Finance imposed conditions, reimburse the Grantee for necessary expenditures

[2] "Reimburse" as used throughout this Agreement includes Department payments to the Grantee for invoices received, but not yet paid, by the Grantee from a third party contractor or vendor, if the invoices comply with the provisions of this Agreement and are a valid liability of the Grantee.

incurred to develop the Project sufficiently to make the sale, lease, license, or operating agreement commercially feasible, such as plan and design expenditures; and

(vi) The Grantee's submission of documentation of all Third-Party Obligations and amendments thereto (including terminations) to the Department and the Department's issuance and the Grantee's receiving of a Notice of Obligation for a particular amount in accordance with the terms of this Agreement shall be governed by the following:

a. The Grantee shall submit to the Department one copy of all Third-Party Obligations and amendments thereto (including terminations) as soon as possible after execution by the Third Party **but prior to execution by the Grantee.**

b. Grantee acknowledges and agrees that if it chooses to enter into a Third-Party Obligation prior to receiving a Notice of Obligation that covers the expenditure, it is solely responsible for such obligations.

c. The Department may, in its sole and absolute discretion, issue to Grantee a Notice of Obligation for the particular amount of that Third Party Obligation that only obligates the Department to reimburse Grantee's expenditures made on or before the Reversion Date or an Early Termination Date. The current Notice of Obligation form is attached to this Agreement as Exhibit 2.

d. The date the Department signs the Notice of Obligation is the date that the Department's Notice of Obligation is effective. After that date, the Grantee is authorized to budget the particular amount set forth in the Notice of Obligation, execute the Third-Party Obligation and request the Third Party to begin work. Payment for any work performed or goods received prior to the effective date of the Notice of Obligation is wholly and solely the obligation of the Grantee.

B. The Grantee shall implement, in all respects, the Project. The Grantee shall provide all necessary qualified personnel, material, and facilities to implement the Project. The Grantee shall finance its share (if any) of the costs of the Project, including all Project overruns.

C. Project funds shall not be used for purposes other than those specified in the Project Description.

D. Unless specifically allowed by law, Project funds cannot be used to reimburse Grantee for indirect Project costs.

ARTICLE III. NOTICE PROVISIONS AND GRANTEE AND DEPARTMENT DESIGNATED REPRESENTATIVES

Whenever written notices, including written decisions, are to be given or received, related to this Agreement, the following provisions shall apply.

For all matters related to this Agreement, the Grantee designates their official representative(s) or successor, in their Signatory Resolution, as required in Article X. B. (v). The official representative will be the contact and signatory for all disbursements and Notices of Obligation.

If applicable, the Grantee designates an Alternative Fiscal Agent in the Signatory Resolution as required in Article X. B. (v), and in the Alternative

The Department designates the persons listed below, or their successors, as the Points of Contact for matters related to this Agreement.

NMED Program Administrator
Name: Paulette Ortiz
Email: paulette.ortiz@env.nm.gov
Telephone: 505-670-3583

NMED Project Manager
Name: Stephanie DuBois
Email: stephanie.dubois@env.nm.gov
Telephone: 505-222-9568

The Grantee and the Department agree that either party shall send all notices, including written decisions, related to this Agreement to the above named persons by email or regular mail. In the case of mailings, notices shall be deemed to have been given and received upon the date of the receiving party's actual receipt or five calendar days after mailing, whichever shall first occur. In the case of email transmissions, the notice shall be deemed to have been given and received on the date reflected on the delivery receipt of email.

ARTICLE IV. REVERSION DATE, TERM, DEADLINE TO EXPEND FUNDS

A. As referenced in Article I(A), the applicable law establishes a date by which Project funds must be expended by Grantee, which is referred to throughout the remainder of this Agreement as the "Reversion Date." Upon being duly executed by both parties, this Agreement shall be effective as of the date of execution by the Department. It shall terminate on June 30, 2026 the Reversion Date unless Terminated Before Reversion Date ("Early Termination") pursuant to Article V herein.

B. The Project's funds must be expended on or before the Reversion Date and, if applicable, Early Termination Date of this Agreement. For purposes of this Agreement, it is not sufficient for the Grantee to encumber the Project funds on its books on or before the Project's Reversion Date or Early Termination Date. Funds are expended and an expenditure has occurred as of the date that a particular quantity of goods are delivered to and received by the Grantee or title to the goods is transferred to the Grantee and/or as of the date particular services are rendered for the Grantee. Funds are ***not*** expended and an expenditure has ***not*** occurred as of the date they are encumbered by the Grantee pursuant to a contract or purchase order with a third party.

ARTICLE V. EARLY TERMINATION

A. Early Termination Before Reversion Date Due to Completion of the Project or Complete Expenditure of the Adjusted Appropriation or Violation of this Agreement

Early Termination includes:

(i) Termination due to completion of the Project before the Reversion Date; or
(ii) Termination due to complete expenditure of the Adjusted Appropriation Amount before the Reversion Date; or
(iii) Termination for violation of the terms of this Agreement; or
(iv) Termination for suspected mishandling of public funds, including but not limited to, fraud, waste, abuse, and conflicts of interest.

Either the Department or the Grantee may early terminate this Agreement prior to the Reversion Date by providing the other party with a minimum of fifteen (15) days' advance, written notice of early termination. Grantee hereby waives any rights to assert an impairment of contract claim against the Department or the State of New Mexico in the event of Early Termination of this Agreement by the Department pursuant to Article V(A).

B. Early Termination Before Reversion Date Due to Non-appropriation

The terms of this Agreement are expressly made contingent upon sufficient appropriations and authorization being made by the Legislature of New Mexico for the performance of this Agreement. Throughout this Agreement the term "non-appropriate" or "non-appropriation" includes the following actions by the New Mexico Legislature: deauthorization, reauthorization or revocation of a prior authorization. The Legislature may choose to non-appropriate the Appropriation referred to in Article I and, if that occurs, the Department shall early terminate this Agreement for non-appropriation by giving the Grantee written notice of such termination, and such termination shall be effective as of the effective date of the law making the non-appropriation. The Department's decision as to whether sufficient appropriations or authorizations are available shall be accepted by the Grantee and shall be final. Grantee hereby waives any rights to assert an impairment of contract claim against the Department or the State of New Mexico in the event of Early Termination of this Agreement by the Department pursuant to Article V(B).

C. Limitation on Department's Obligation to Make Grant Disbursements to Grantee in the Event of Early Termination

In the event of Early Termination of this Agreement by either party, the Department's sole and absolute obligation to reimburse the Grantee is expressly conditioned upon the limitations set forth Article II.

ARTICLE VI. SUSPENSION OF NEW OR FURTHER OBLIGATIONS

A. The Department may choose, in its sole and absolute discretion, to provide written notice to the Grantee to suspend entering into new and further obligations. Upon the receipt of such written notice by the Grantee:

(i) The Grantee shall immediately suspend entering into new or further written obligations with third parties; and

(ii) The Department will suspend the issuance of any new or further Notice of Obligation under this Agreement; and

(iii) The Department may direct the Grantee to implement a corrective action plan in accordance with Article VI(D) herein.

B. In the event of Suspension of this Agreement, the Department's sole and absolute obligation to reimburse the Grantee is expressly conditioned upon the limitations set forth in Article II herein.

C. A suspension of new or further obligations under this Agreement shall remain in effect unless or until the date the Grantee receives written notice given by the Department informing the Grantee that the Suspension has been lifted or that the Agreement has been Early Terminated in accordance with Article V herein. If the Suspension is lifted, the Department will consider further requests for Notice of Obligation.

D. Corrective Action Plan in the Event of Suspension

In the event that the Department chooses, in its sole and absolute discretion to direct the Grantee to suspend entering into new or further written obligations with third parties pursuant to Article VI(A), the Department may, but is not obligated to, require the Grantee to develop and implement a written corrective action plan to remedy the grounds for the Suspension. Such corrective action plan must be approved by the Department and be signed by the Grantee. Failure to sign a corrective action plan or meet the terms and deadlines set forth in the signed corrective action plan, is hereby deemed a violation of the terms of this Agreement for purposes of Early Termination, Article V(A)(iii). The corrective action plan is in addition to, and not in lieu of, any other equitable or legal remedy, including but not limited to Early Termination.

ARTICLE VII. AMENDMENT

This Agreement shall not be altered, changed, or amended except by instrument in writing duly executed by both the parties hereto.

ARTICLE VIII. REPORTS

A. Database Reporting

The Grantee shall report quarterly Project activity by entering such Project information as the Department and the Department of Finance and Administration may require, such information entered directly into a database maintained by the Department of Finance and Administration (Budget & Formulation Management System). Additionally, the Grantee shall certify on the Request for Payment form (Exhibit 1) that updates have been maintained and are current in the database. The Grantee hereby acknowledges that failure to perform and/or certify updates into the database will delay or potentially jeopardize the reimbursement of funds. The Department shall give Grantee a minimum of thirty (30) days' advance written notice of any changes to the information the Grantee is required to report.

Quarterly reports shall be due on the last day of the month that is 30 days prior to the end of the quarter following execution of this Agreement by the Department and ending during the quarter of the submission of the final request for reimbursement for the Project, or the following quarter.

B. Requests for Additional Information/Project Inspection

During the term of this Agreement and during the period of time during which the Grantee must maintain records pursuant to Article VIII, the Department may:

(i) request such additional information regarding the Project as it deems necessary; and

(ii) conduct, at reasonable times and upon reasonable notice, onsite inspections of the Project.

Grantee shall respond to such requests for additional information within a reasonable period of time, as established by the Department.

ARTICLE IX. REQUEST FOR PAYMENT PROCEDURES AND DEADLINES

A. The Grantee shall request payment by submitting a Request for Payment, in the form attached hereto as Exhibit 1. Payment requests are subject to the following procedures:

(i) The Grantee must submit a Request for Payment; and

(ii) Each Request for Payment must contain proof of payment by the Grantee or liabilities incurred by the Grantee showing that the expenditures are valid or are liabilities incurred by the Grantee in the form of actual unpaid invoices received by the Grantee for services rendered by a third party or items of tangible personal property received by the Grantee for the implementation of the Project; provided, however, that the Grantee may be reimbursed for unpaid liabilities only if the

Department, in its sole and absolute discretion, agrees to do so and in accordance with any special conditions imposed by the Department.

(iii) In cases where the Grantee is submitting a Request for Payment to the Department based upon invoices received, but not yet paid, by the Grantee from a third party contractor or vendor, if the invoices comply with the provisions of this Agreement and are a valid liability of the Grantee, the Grantee shall make payment to those contractors or vendors within five (5) business days from the date of receiving reimbursement from the Department or such shorter period of time as the Department may prescribe in writing. The Grantee is required to certify to the Department proof of payment to the third party contractor or vendor within ten (10) business days from the date of receiving reimbursement from the Department.

B. The Grantee must obligate 5% of the Adjusted Appropriation Amount within six months of acceptance of the grant agreement and must have expended no less than 85% of the Adjusted Appropriation Amount six months prior to the reversion date.

C. **Deadlines**

Requests for Payments shall be submitted by Grantee to the Department on the earlier of:

(i) Immediately as they are received by the Grantee but at a minimum thirty (30) days from when the expenditure was incurred or liability of the Grantee was approved as evidenced by an unpaid invoice received by the Grantee from a third party contractor or vendor; or

(ii) Twenty (20) days from date of Early Termination; or

(iii) **Twenty (20) days from the Reversion Date**.

D. The Grantee's failure to abide by the requirements set forth in Article II and Article IX herein will result in the denial of its Request for Payment or will delay the processing of Requests for Payment. The Department has the right to reject a payment request for the Project unless and until it is satisfied that the expenditures in the Request for Payment are for permissible purposes within the meaning of the Project Description and that the expenditures and the Grantee are otherwise in compliance with this Agreement, including but not limited to, compliance with the reporting requirements and the requirements set forth in Article II herein to provide Third Party Obligations and the Deadlines set forth in Article IX herein. The Department's ability to reject any Request for Payment is in addition to, and not in lieu of, any other legal or equitable remedy available to the Department due to Grantee's violation of this Agreement.

ARTICLE X. PROJECT CONDITIONS AND RESTRICTIONS; REPRESENTATIONS AND WARRANTIES

A. The following general conditions and restrictions are applicable to the Project:

(i) The Project's funds must be spent in accordance with all applicable state laws, regulations, policies, and guidelines, including, but not limited to, the State Procurement Code (or local procurement ordinance, where applicable).

(ii) The Project must be implemented in accordance with the New Mexico Public Works Minimum Wage Act, Section 13-4-10 through 13-4-17 NMSA 1978, as applicable. Every contract or project in excess of sixty thousand dollars ($60,000) that the Grantee is a party to for construction, alteration, demolition or repair or any combination of these, including painting and decorating, of public buildings, public works or public roads and that requires or involves the employment of mechanics, laborers or both shall contain a provision stating the minimum wages

and fringe benefits to be paid to various classes of laborers and mechanics, shall be based upon the wages and benefits that will be determined by the New Mexico Department of Workforce Solutions to be prevailing for the corresponding classes of laborers and mechanics employed on contract work of a similar nature in the locality. Further, every contract or project shall contain a stipulation that the contractor, subcontractor, employer or a person acting as a contractor shall pay all mechanics and laborers employed on the site of the project, unconditionally and not less often than once a week and without subsequent unlawful deduction or rebate on any account, the full amounts accrued at time of payment computed at wage rates and fringe benefit rates not less than those determined pursuant to Section 13-4-11 (B) NMSA 1978 to be the prevailing wage rates and prevailing fringe benefit rates issued for the project.

(iii) The Project may only benefit private entities in accordance with applicable law, including, but not limited to, Article IX, Section 14 of the Constitution of the State of New Mexico, the "Anti-Donation Clause."

(iv) The Grantee shall not for a period of 10 years from the date of this agreement convert any property acquired, built, renovated, repaired, designed or developed with the Project's funds to uses other than those specified in the Project Description without the Department's and the Board of Finance's express, advance, written approval, which may include a requirement to reimburse the State for the cost of the project, transfer proceeds from the disposition of property to the State, or otherwise provide consideration to the State.

(v) The Grantee shall comply with all federal and state laws, rules and regulations pertaining to equal employment opportunity. In accordance with all such laws, rules and regulations the Grantee agrees to assure that no person shall, on the grounds of race, color, national origin, sex, sexual preference, age or handicap, be excluded from employment with Grantee, be excluded from participation in the Project, be denied benefits or otherwise be subject to discrimination under, any activity performed under this Agreement. If Grantee is found to be not in compliance with these requirements during the life of this Agreement, Grantee agrees to take appropriate steps to correct any deficiencies. The Grantee's failure to implement such appropriate steps within a reasonable time constitutes grounds for terminating this Agreement.

B. The Grantee hereby represents and warrants the following:

(i) The Grantee has the legal authority to receive and expend the Project's funds.

(ii) This Agreement has been duly authorized by the Grantee, the person executing this Agreement has authority to do so, and, once executed by the Grantee, this Agreement shall constitute a binding obligation of the Grantee, enforceable according to its terms.

(iii) This Agreement and the Grantee's obligations hereunder do not conflict with any law or ordinance or resolution applicable to the Grantee, the Grantee's charter (if applicable), or any judgment or decree to which the Grantee is subject.

(iv) The Grantee has independently confirmed that the Project Description, including, but not limited to, the amount and Reversion Date, is consistent with the underlying appropriation in law.

(v) The Grantee's governing body has duly adopted or passed as an official act a resolution, motion, or similar action authorizing the person identified as the official representative of the Grantee to sign the Agreement and to sign Requests for Payment.

(vi) The Grantee shall abide by New Mexico laws regarding conflicts of interest, governmental conduct and whistleblower protection. The Grantee specifically agrees that no officer or employee of the local jurisdiction or its designees or agents, no member of the governing body, and no other public official of the locality who exercises any function or responsibility with

respect to this Grant, during their tenure or for one year thereafter, shall have any interest, direct or indirect, in any contract or subcontract, or the proceeds thereof, for work to be performed or goods to be received, pursuant to this Grant. Further, Grantee shall require all of its contractors to incorporate in all subcontracts the language set forth in this paragraph prohibiting conflicts of interest.

(vii) No funds have been paid or will be paid, by or on behalf of the Grantee, to any person for influencing or attempting to influence an officer or employee of this or any agency or body in connection with the awarding of any Third Party Obligation and that the Grantee shall require certifying language prohibiting lobbying to be included in the award documents for all subawards, including subcontracts, loans and cooperative agreements. All subrecipients shall be required to certify accordingly.

ARTICLE XI. STRICT ACCOUNTABILITY OF RECEIPTS AND DISBURSEMENTS; PROJECT RECORDS

A. The Grantee shall be strictly accountable for receipts and disbursements relating to the Project's funds. The Grantee shall follow generally accepted accounting principles, and, if feasible, maintain a separate bank account or fund with a separate organizational code, for the funds to assure separate budgeting and accounting of the funds.

B. For a period of six (6) years following the Project's completion, the Grantee shall maintain all Project related records, including, but not limited to, all financial records, requests for proposals, invitations to bid, selection and award criteria, contracts and subcontracts, advertisements, minutes of pertinent meetings, as well as records sufficient to fully account for the amount and disposition of the total funds from all sources budgeted for the Project, the purpose for which such funds were used, and such other records as the Department shall prescribe.

C. The Grantee shall make all Project records available to the Department, the Department of Finance and Administration, and the New Mexico State Auditor upon request. With respect to the funds that are the subject of this Agreement, if the State Auditor or the Department of Finance and Administration finds that any or all of these funds were improperly expended, the Grantee may be required to reimburse to the State of New Mexico, to the originating fund, any and all amounts found to be improperly expended.

ARTICLE XII. IMPROPERLY REIMBURSED FUNDS

If the Department determines that part or all of the Appropriation Amount was improperly reimbursed to Grantee, including but not limited to, Project funds reimbursed to Grantee based upon fraud, mismanagement, misrepresentation, misuse, violation of law by the Grantee, or violation of this Agreement, the Grantee shall return such funds to the Department for disposition in accordance with law.

ARTICLE XIII. LIABILITY

Neither party shall be responsible for liability incurred as a result of the other party's acts or omissions in connection with this Agreement. Any liability incurred in connection with this Agreement is subject to immunities and limitations of the New Mexico Tort Claims Act.

ARTICLE XIV. SCOPE OF AGREEMENT

This Agreement constitutes the entire and exclusive agreement between the Grantee and Department concerning the subject matter hereof. The Agreement supersedes any and all prior or contemporaneous agreements, understandings, discussions, communications, and representations, written or verbal.

ARTICLE XV. REQUIRED NON-APPROPRIATIONS CLAUSE IN CONTRACTS FUNDED IN WHOLE OR PART BY FUNDS MADE AVAILABLE UNDER THIS AGREEMENT

The Grantee acknowledges, warrants, and agrees that Grantee shall include a "non-appropriations" clause in all contracts between it and other parties that are (i) funded in whole or part by funds made available under this Agreement and (ii) entered into after the effective date of this Agreement that states:

"The terms of this Agreement are contingent upon sufficient appropriations and authorization being made by the Legislature of New Mexico for the performance of this Agreement. If sufficient appropriations and authorization are not made by the Legislature, the Santa Fe may immediately terminate this Agreement by giving Contractor written notice of such termination. The Santa Fe's decision as to whether sufficient appropriations are available shall be accepted by the Contractor and shall be final. Contractor hereby waives any rights to assert an impairment of contract claim against the Santa Fe or the New Mexico Environment Department or the State of New Mexico in the event of immediate or Early Termination of this Agreement by the Santa Fe or the Department"

ARTICLE XVI. REQUIRED TERMINATION CLAUSE IN CONTRACTS FUNDED IN WHOLE OR PART BY FUNDS MADE AVAILABLE UNDER THIS AGREEMENT

Grantee acknowledges, warrants, and agrees that Grantee shall include the following termination clause in all contracts that are (i) funded in whole or part by funds made available under this Agreement and (ii) entered into after the effective date of this Agreement:

"This contract is funded in whole or in part by funds made available under a New Mexico Environment Department Grant Agreement. Should the NMED early terminate the grant agreement, the Santa Fe may early terminate this contract by providing Contractor written notice of such termination. In the event of termination pursuant to this paragraph, the Santa Fe only liability shall be to pay Contractor for acceptable goods delivered and services rendered before the termination date."

Grantee hereby waives any rights to assert an impairment of contract claim against the Department or the State of New Mexico in the event of Early Termination of this Agreement by the Department.

ARTICLE XVII. COMPLIANCE WITH UNIFORM FUNDING CRITERIA.

A. Throughout the term of this Agreement, Grantee shall:

1. submit all reports of annual audits and agreed upon procedures required by Section 12-6-3(A)-(B) NMSA 1978 by the due dates established in 2.2.2 NMAC, reports of which must be a public record pursuant to Section 12-6-5(A) NMSA 1978 within forty-five days of delivery to the State Auditor;
2. have a duly adopted budget for the current fiscal year approved by its budgetary oversight agency (if any);

3. timely submit all required financial reports to its budgetary oversight agency (if any); and

4. have adequate accounting methods and procedures to expend grant funds in accordance with applicable law and account for and safeguard grant funds and assets acquired by grant funds.

B. In the event Grantee fails to comply with the requirements of Paragraph A of this Article XVII, the Department may take one or more of the following actions:

1. suspend new or further obligations pursuant to Article VI(A) of this Agreement;

2. require the Grantee to develop and implement a written corrective action plan pursuant to Article VI(D) of this Agreement to remedy the non-compliance;

3. impose special grant conditions to address the non-compliance by giving the Grantee notice of such special conditions in accordance with Article III of this Agreement; the special conditions shall be binding and effective on the date that notice is deemed to have been given pursuant to Article III; or

4. terminate this Agreement pursuant to Article V(A) of this Agreement.

ARTICLE XVIII. [OPTIONAL IF THE APPROPRIATION IS FUNDED BY SEVERANCE TAX BONDS OR GENERAL OBLIGATION BONDS] SEVERANCE TAX BOND AND GENERAL OBLIGATION BOND PROJECT CLAUSES

A. Grantee acknowledges and agrees that the underlying appropriation for the Project is a severance tax bond or general obligation bond appropriation, and that the associated bond proceeds are administered by the New Mexico State Board of Finance (SBOF), an entity separate and distinct from the Department. Grantee acknowledges and agrees that (i) it is Grantee's sole and absolute responsibility to determine through SBOF staff what (if any) conditions are currently imposed on the Project; (ii) the Department's failure to inform Grantee of a SBOF imposed condition does not affect the validity or enforceability of the condition; (iii) the SBOF may in the future impose further or different conditions upon the Project; (iv) all SBOF conditions are effective without amendment of this Agreement; (v) all applicable SBOF conditions must be satisfied before the SBOF will release to the Department funds subject to the condition(s); and (vi) the Department's obligation to reimburse Grantee from the Project is contingent upon the then current SBOF conditions being satisfied.

B. Grantee acknowledges and agrees that the SBOF may in its sole and absolute discretion remove a project's assigned bond proceeds if the project doesn't proceed sufficiently. Entities must comply with the requirement to encumber five percent (5%) of Project funds within six months of bond issuance as certified by the grantee in the Bond Questionnaire and Certification documents submitted to the SBOF. Failure to comply may result in the bond proceeds reassignment to a new ready project. If this should occur this grant agreement will be suspended until the entity has demonstrated readiness as determined by the SBOF and the Department.

C. Grantee acknowledges and agrees that this Agreement is subject to the SBOF's Bond Project Disbursements rule, NMAC 2.61.6, as may be amended or re-codified. The rule provides definitions and interpretations of grant language for the purpose of determining whether a particular activity is allowable under the authorizing language of the agreement.

IN WITNESS WHEREOF, the parties have duly executed this Agreement as of the date of execution by the Department.

GRANTEE

_____
Signature of Official with Authority to Bind Grantee

_____
Entity Name

By: _____
(Type or Print Name)

Its: _____
(Type or Print Title)

_____
Date

New Mexico Environment Department

_____
Judith L. Kahl, P.E., Bureau Chief, NMED Construction Programs Bureau
Signed pursuant to the March 24, 2023 Secretary of Environment Delegation Order

IN WITNESS WHEREOF, the City of Santa Fe has agreed to this Grant as of the date of the signature by the required approval authorities below.

CITY OF SANTA FE:

__See Previous Page_____

ALAN WEBBER, MAYOR

DATE: _____

ATTEST:

_____

GERALYN CARDENAS, INTERIM CITY CLERK

CITY ATTORNEY'S OFFICE:

Kevin L. Nault
Kevin L. Nault (Aug 21, 2024 13:31 MDT)

ASSISTANT CITY ATTORNEY

FINANCE:

Emily K. Oster Jan 15, 2025

EMILY OSTER, FINANCE DIRECTOR

SAMPLE

STATE OF NEW MEXICO
CAPITAL GRANT PROJECT
Request for Payment Form
Exhibit 1

I. Grantee Information

(Make sure information is complete & accurate)

A. Grantee:

B. Address:

(Complete Mailing, including Suite, if applicable)

City State Zip

C. Phone No:

D. Grant No:

E. Project Title:

F. Grant Expiration Date:

II. Payment Computation

A. Payment Request No.

B. Grant Amount:

C. AIPP Amount *(If Applicable)*:

D. Funds Requested to Date:

E. Amount Requested this Payment:

F. Reversion Amount (*If Applicable*):

G. Grant Balance:

H. ☐ GF ☐ GOB ☐ STB (*attach wire if first draw*)

I. ☐ Final Request for Payment (*if Applicable*)

III. Fiscal Year :

(The State of NM Fiscal Year is July 1, 20XX through June 30, 20XX of the following year)

IV. ☐ **Reporting Certification:** I hereby certify to the best of my knowledge and belief, that database reporting is up to date; to include the accuracy of expenditures and grant balance, project status, project phase, achievements and milestones; and in compliance with Article VIII of the Capital Outlay Grant Agreement.

V. ☐ **Compliance Certification:** Under penalty of law, I hereby certify to the best of my knowledge and belief, the above information is correct; expenditures are properly documented, and are valid expenditures or actual receipts; and that the grant activity is in full compliance with Article IX, Sec. 14 of the New Mexico Constitution known as the "anti donation" clause.

Grantee Fiscal Officer
or **Fiscal Agent** (*if applicable*)

Printed Name

Date:

Grantee Representative

Printed Name

Date:

(State Agency Use Only)

Vendor Code: **Fund No.:** **Loc No.:**

I certify that the State Agency financial and vendor file information agree with the above submitted information.

Division Fiscal Officer Date

Division Project Manager Date

NOTICE OF OBLIGATION TO REIMBURSE GRANTEE
SAMPLE EXHIBIT 2

Notice of Obligation to Reimburse Grantee [# 1]

DATE: [_____]

TO: Department Representative: [_____,_____]
FROM: Grantee: [_____]
Grantee Official Representative: [_____]

SUBJECT: Notice of Obligation to Reimburse Grantee
Grant Number: [_____]
Grant Termination Date: [_____]

As the designated representative of the Department for Grant Agreement number [_____] entered into between Grantee and the Department, I certify that the Grantee has submitted to the Department the following third party obligation executed, in writing, by the third party's authorized representative:

Vendor or Contractor: [_____]
Third Party Obligation Amount: [_____]

Vendor or Contractor: [_____]
Third Party Obligation Amount: [_____]

Vendor or Contractor: [_____]
Third Party Obligation Amount: [_____]

I certify that the State is issuing this Notice of Obligation to Reimburse Grantee for permissible purposes within the scope of the project description, subject to all the terms and conditions of the above referenced Grant Agreement.

Grant Amount (Minus AIPP if applicable): [_____]
The Amount of this Notice of Obligation: [_____]
The Total Amount of all Previously Issued Notices of Obligation: [_____]
The Total Amount of all Notices of Obligation to Date: [_____]
Note: Contract amounts may exceed the total grant amount, but the invoices paid by the grant will not exceed the grant amount.

Department Rep. Approver: [_____]
Title: [_____]
Signature: [_____]
Date: [_____]

1 Administrative and/or Indirect Cost – generally, the legislation authorizing the issuance of bonds prohibits the use of its proceeds for indirect expenses (e.g. penalty fees or damages other than pay for work performed, attorney fees, and administrative fees). Such use of bond proceeds shall not be allowed unless specifically authorized by statute.

New Mexico Environment Department (NMED)
Capital Appropriations Certification Document
Article IX. A. (ii) and (iii)
Project JEMEZ RD CONSTRUCT SAP 22-G2419-STB
Grantee Santa Fe
Payment Request No_____

I certify that payment to all vendors on the above referenced payment request were paid no more than five (5) days after receiving reimbursement from NMED.

_____

Official Representative, Signed Name, Printed Name, Date

TECHNICAL REQUIREMENTS
NEW MEXICO ENVIRONMENT DEPARTMENT
CAPITAL OUTLAY

ARTICLE 1 REVIEW

Upon execution of the grant agreement, the Grantee will follow the procedures listed below unless waived in writing by the New Mexico Environment Department (NMED) (payment may be withheld if any of these procedures are not followed by the Grantee).

A. The Grantee must submit copies to NMED of all executed contracts entered into by the Grantee and related to the project, for review and, if appropriate, approval. Only approved eligible expenditures incurred **after** the effective date of the Grant Agreement shall be reimbursed or paid from these funds.

B. If these grant funds are to be used for engineering and/or other professional services, the hiring process for engineering services and/or other professional services must be performed in compliance with the New Mexico Procurement Code [Sections 13-1-21 et seq. NMSA 1978]. If engineering fees exceed $60,000, excluding gross receipt taxes, the Grantee is required to contact the Professional Technical Advisory Board (PTAB) for assistance in the preparation of the Request for Proposals (RFP) package. (PTAB: phone (505) 888-6161 and e-mail ptab@acecnm.org.)

C. If these grant funds are used for engineering and/or other professional services, the Grantee must submit a copy of any executed engineering agreement and/or other professional services contract so a notice of obligation can be prepared and issued. If the Grantee's staff will be used to prepare the design, a letter certifying that must be submitted to NMED for the project record. The grantee has the option of using the NMED engineering agreement. In any case all engineering agreements must include the non-appropriation and termination clauses required by DFA in all agreements funded by capital outlay.

D. A preliminary engineering report (PER), technical memorandum, or study by a registered New Mexico Professional Engineer may be required.

E. If the grant funds are to be used for engineering design or for construction, the Grantee must submit all plans, specifications, bid documents, and engineer's construction cost estimate, for the project (prepared and sealed by a licensed and registered New Mexico Professional Engineer) to NMED **before** the project is advertised for construction bids, along with a letter **from the Grantee** stating that they have reviewed and accepted the plans and specifications. If required, the Grantee must also submit the plans and specifications to the appropriate regulatory agency for review and approval and provide a copy of the approval letter from the regulatory agency. Upon receipt of these documents the NMED will issue a letter confirming receipt of the required documents and informing the Grantee to proceed with advertising the project for construction bids.

F. A site certificate must be submitted prior to project bid advertisement that certifies all necessary easements, rights-of-way, and/or property upon or through which the project is being constructed have been obtained. The Site Certificate must be signed by an attorney, engineer, surveyor, or title abstractor.

G. If grant funds are to be used for the purchase or acquisition of real property as a part of this project and within the project period, the Grantee will submit documentation of the acquisition to NMED, including a legal description of the property, the date the property will be acquired, evidence of clear title, and an appraisal report prepared by a qualified appraiser selected through applicable procurement procedures.

H. The Grantee will submit the proof of advertisement, recommendation of award, bid tabulation, complete bid submittal of the selected contractor, any addenda issued, and funding analysis listing all funds that will pay for construction to NMED prior to award of the construction contract, along with a letter from the Grantee stating they concur with the recommendation of award to the selected contractor and price and confirming that the Grantee has sufficient funds for construction.

I. The Grantee will submit the notice of the award, the notice of a pre-construction conference, a copy of the executed construction contract documents (including payment and performance bonds), and the notice to proceed to NMED. NMED will prepare and issue the notice of obligation for the construction cost making the grant funds available for reimbursement of construction costs. The selected contractor will be required to post a performance and payment bond in accordance with requirements of Section 13-4-18 NMSA 1978.

J. The Grantee will provide a full-time construction inspector during construction of the project unless NMED determines that part time inspection is adequate for the project. This must be requested and approved by NMED prior to the start of construction.

K. All daily construction inspection reports shall be made available to the NMED upon request.

L. Notwithstanding the inspections performed by the Grantee and its engineer, NMED will have the right to examine all installations comprising the project, including materials delivered and stored on-site for use on the project. Such examinations will not be considered an inspection for compliance with contract plans but will be a general NMED review as described in Article 2 below.

M. If applicable, the Grantee (or the system owner) will employ qualified utility operators and will comply with all provisions of the New Mexico Utility Operators Certification Act, Section 61-33-1 et seq. NMSA 1978.

N. NMED will reimburse the grantee its actual costs when NMED determines, in its sole discretion, that expenditures were appropriate under the terms of the Agreement and that the expenditures were properly documented.

ARTICLE 2 NMED OVERSIGHT

NMED inspection, review and oversight is only for purposes of compliance with applicable state grant requirements, procedures, statutes, and regulations. NMED approval will not be interpreted as a warranty or guarantee of any kind. Responsibility for the design of the project will lie solely with the engineer of record. All defects and their correction will be the responsibility of the Grantee and its contractors and engineers or consultants. Any questions raised by NMED during its inspections and reviews shall be resolved exclusively by the Grantee. The Grantee and its contractors and engineers or consultants will remain responsible for the completion and success of the project. No action by NMED shall relieve the

owner, engineer, or contractor of legal responsibilities for the overall integrity of the project, adequacy of the design, safety, or compliance with all applicable regulations.

ARTICLE 3 CLOSEOUT

A. The project will not be considered complete until the work as defined in this agreement has been fully performed, and finally and unconditionally accepted by the Grantee and the engineer of record.

B. If the grant funds are used for purchase of equipment, final payment will be made after receipt of the equipment and equipment title, if applicable. Appraisal reports are required for the purchase of used equipment.

C. If the grant funds are used for construction, final payment will be made after the final inspection has been conducted by NMED and the following items, unless waived by NMED, have been provided to NMED, and have been reviewed and approved by NMED:

i. A certificate of substantial completion including punch list items.

ii. A final certified construction pay request prepared by the Grantee's project engineer and approved by the Grantee.

iii. A written consent of the surety, if any, to final payment.

iv. Complete and legally effective releases or waivers (satisfactory to the Grantee) of all liens arising out of the contract documents and the labor services performed and the materials and equipment furnished there under. In lieu thereof and as approved by the Grantee, contractor(s) may furnish receipts or releases in full; an affidavit of contractor that the releases and receipts include labor, services, materials, and equipment for which a lien could be filed and that all payrolls, material and equipment bills, and other indebtedness connected with the work for which the Grantee or its property might in any way be responsible, have been paid or otherwise satisfied.

v. Certification letter by the Grantee and contractor that the Labor Standards Contract Provisions have been met.

vi. Certification letter of project acceptance by the Grantee and the Grantee's project engineer stating that work has been satisfactorily completed and the construction contractor has fulfilled all of the obligations required under the contract documents with the Grantee, or if payment and materials performance bonds are "called", an acceptance close-out settlement to the Grantee and contractors will be submitted to NMED.

vii. Certification letter from the Grantee confirming receipt and acceptance of the record drawings and operation and maintenance manuals.

Rev. May 2023

NEW MEXICO ENVIRONMENT DEPARTMENT
CONSTRUCTION PROGRAMS BUREAU

NMED DISBURSEMENT REQUEST

SPECIAL APPROPRIATIONS PROGRAM (SAP)

A. NAME OF ENTITY

C. DISBURSEMENT REQUEST NUMBER

B. PROJECT NUMBER

D. GRANT AMOUNT

	PREVIOUS EXPENDITURES		CURRENT EXPENDITURES		CUMULATIVE		FUNDS REMAINING	
	NMED PROGRAM	OTHER FUNDS	NMED PROGRAM	OTHER FUNDS	NMED PROGRAM	OTHER FUNDS	NMED PROGRAM	OTHER FUNDS
Engineer Fees								
Other Professional								
Service Fees								
Inspection Fees								
Property Acquisition								
Construction Cost								
Planning Cost								
Equipment								
Other Costs (specify)								
Contingencies								
TOTAL								

Article IX.A. (iii). By checking this box you are stating that payment has NOT been paid to the vendors associated with this request. Upon receipt of payment from NMED, certification of payment will be sent within 10 days from the date of receiving reimbursement.		Article IX. A. (ii). By checking this box you are certifying that the vendors associated with this request have been paid.	

Certification: Under penalty of law, I certify that all the above expenditures are true and correct and are for appropriate purposes in accordance with the terms and conditions of the pertinent Loan/Grant Agreement; that all of the above expenses are properly documented, and are actual invoices; that payment has not been received; and that the grant activity is in full compliance with Article IX, Sec. 14 of the New Mexico Constitution known as the "anti-donation" clause.

Signature of Official Representative:	Typed or Printed Name:	Phone:	Date:
X			
Signature of Fiscal Agent if appliable:	Typed or Printed Name:	Phone:	Date:
X			

A RESOLUTION AUTHORIZING THE ASSIGNMENT OF AUTHORIZED OFFICER(S) AND AGENT(S)

Resolution Number

Whereas, the Board of Directors / Council / Commission of Community / Utility of County Name County of the State of New Mexico shall enter into a Grant Agreement with the State of New Mexico Environment Department, and

Whereas, the Agreement is identified as Project Number SAP _____

NOW THEREFORE, BE IT RESOLVED by the named applicant that:

(Name), Mayor/ Chairperson / Director / Officer, or successor is authorized to sign the Grant Agreement for this project, and

(Authorized Officer Name), (Authorized Officer Title), (may have more than one) or successor is the OFFICAL REPRESENTATIVE(S) who is authorized to sign all other documents necessary to fulfill the Grant Agreement and the requirements (Disbursements and Notice of Obligations (NOO)) and to act as the project contact, and

(Designated Agent or Employee Name), (Title), or successor is the Budget & Formulation Management System (BFM) contact who is designated to update the BFM database quarterly per Article VIII. A. of the Intergovernmental Grant Agreement.

If a Fiscal Agent is required:
(Fiscal Agent Representative Name and Title) or successor, is the FISCAL AGENT and is authorized to sign Disbursements.
PASSED, APPROVED, AND ADOPTED: _____.

Name, Mayor / Chairperson / Director / Officer, Title, Community / Utility

_____ _____

(Signature) **Date**

(SEAL)

ATTEST:

_____

(Municipal Clerk)

Name of Grantee: _____ Project Number: _____

Current Authorized Signatures (submit with Signature Resolution; update when necessary)

Authorized to Sign Grant Agreement	
Name	
Title	
Signature	
Address	
Email	
Phone	

Official Representatives authorized to sign Disbursement Requests and All Other Documents,	
Name	
Title	
Signature	
Address	
Email	
Phone	

Alternate Official Representative; To sign Disbursement Requests and All Other Documents, Requirement and Act as the Project Contact	
Name	
Title	
Signature	
Address	
Email	
Phone	

Designated Agent or Employee that will make Quarterly BFM Updates	
Name	
Title	
Signature	Signature Not Required
Address	
Email	
Phone	

Designated Agent or Employee that will make Quarterly BFM Updates	
Name	
Title	
Signature	Signature Not Required

Address	
Email	
Phone	

CITY OF SANTA FE, NEW MEXICO

RESOLUTION NO. 2024-48

INTRODUCED BY:

Councilor Amanda Chavez

A RESOLUTION

ASSIGNING AUTHORIZED OFFICERS AND AGENTS FOR GRANT AGREEMENT NUMBER SAP 22-G2419-STB FOR THE PLAN, DESIGN, AND CONSTRUCTION OF IMPROVEMENTS ON JEMEZ ROAD.

WHEREAS, in the Laws of 2022, Chapter 52, Section 22, Subsection 118, the Legislature made an appropriation to the New Mexico Environment Department ("NMED"), funds from which NMED is making available to the City of Santa Fe ("Grantee") through Grant Agreement, number SAP 22-G2419-STB ("Agreement"), incorporated as Attachment A, in the amount of four hundred thousand dollars ($400,000), to plan, design, and construct improvements on Jemez Road, including a sewer line south of Airport Road, to improve residential septic systems in the city of Santa Fe, in Santa Fe County; and

WHEREAS, Article X.B.(v) of the Agreement states that, the "Grantee's governing body has duly adopted or passed as an official act a resolution, motion or similar action authorizing the person identified as the official representative of the Grantee to sign the Agreement and to sign Requests for Payment" and as is described in Article III of the agreement (Attachment A), the

signatories identified in the resolution "will be the contact and signatory for all disbursements and Notices of Obligation"; and

WHEREAS, in a letter dated August 24, 2023, the New Mexico Department of Finance and Administration ("DFA") took the position that it required the City to initiate a fiscal agent relationship in order for the City to utilize its current State Capital appropriations; and

WHEREAS, as a result of the DFA's position, the City entered into an intergovernmental services agreement, incorporated as Attachment B, with North Central Economic Development District ("NCEDD") for fiscal agent services, in which NCEDD agreed to review and sign Requests for Payment for permissible expenditures.

NOW, THEREFORE, BE IT RESOLVED BY THE GOVERNING BODY OF THE CITY OF SANTA FE that,

1) Alan Webber, Mayor, or successor(s) is the City's official authorized to sign the Agreement for this Project once approved by the Governing Body of the City of Santa Fe;
2) Stan Holland, Wastewater Division Engineer, or successor(s), is the Official Representative who is authorized to sign all other documents necessary to fulfill the Agreement and the requirements (Requests for Payment and Notices of Obligation) and to act as the Project contact;
3) Felicity Fonseca, Community Development Director, North Central New Mexico Economic Development District or successor(s) is the Fiscal Agent who is authorized to sign Requests for Payment submitted by the City to the State pursuant to Article IX of the Agreement and Attachment B.

PASSED, APPROVED, and ADOPTED this 11th day of December, 2024.

Alan Webber (Dec 12, 2024 16:06 MST)

ALAN WEBBER, MAYOR

ATTEST:

Andrea Salazar

Andrea Salazar (Dec 12, 2024 16:08 MST)

ANDRÉA SALAZAR, CITY CLERK

APPROVED AS TO FORM:

ERIN K. McSHERRY, CITY ATTORNEY

Log # *{Finance use only}*:	
Journal # *{Finance use only}*:	

City of Santa Fe, New Mexico
BUDGET AMENDMENT RESOLUTION (BAR)

DEPARTMENT / DIVISION NAME	DATE
Public Utilities / Wastewater	12/18/2024

ITEM DESCRIPTION	ORG	OBJECT	PROJECT	INCREASE	DECREASE
EXPENDITURES				*{enter as positive #}*	*{enter as negative #}*
WIP Construction - Jemez Road Sewerline	5000375	572970	WWM2433001	400,000	
REVENUES				*{enter as negative #}*	*{enter as positive #}*
NMED - SAP 22-G2419-STB Jemez Rd Sewerline	5000375	490190	WWM2433001	(400,000)	
				$ -	$ -

JUSTIFICATION: *(use additional page if needed)*
--Attach supporting documentation/memo

Agreement with NM Enviroment Department to design and construct a sewerline at Jemez Road, in the total amount of $400,000. Term 06/30/2026 (NMED SAP 22-G2419-STB)

{Complete section below if BAR results stp

Fund(s) Affected	Fund Balance Increase/(Decrease)
TOTAL:	**0**

{Use this form for Finance Committee/ City Council agenda items ONLY}

CITY COUNCIL APPROVAL

City Council Approval Date

Agenda Item #:

Halona Crowe	12/10/2024	Andy Hopkins	Jan 9, 2025
Prepared By *{print name}*	Date	Budget Officer	Date
Jan 9, 2025			
Division Director Signature *{optional}*	Date	Finance Director *{≤ $5,000}*	Date
Jan 9, 2025			
Department Director Signature	Date	City Manager *{≤ $60,000}*	Date

City of Santa Fe New Mexico

Finance Department

Project Ledger Request Form

Date of Request: 01/02/2025 req to revise ORG

Project Title: Jemez Road Sewerline

Project Type: ☑ CIP ☑ Grant ☐ Internal Tracking

Project ID: WWM2433001

Grant ID: S2426

Approved By: Erika Lujan (Jan 9, 2025 13:29 MST)

Entered By: CT 1/3/25 (Finance Use Only)

Department: Public Utilities Project Manager: Paul Heerbrandt Ext: 4637

Project Date Range: 01/02/25 to 06/30/2026 ☑ Create Fixed Asset

---

☐ Multi-Funding (complete all funding sources, should equal 100%)

Funding Source: NMED SAP 22-G2419 STB % of Funding: 100

MUNIS ORG: 5000375 MUNIS OBJ: 490190 Awarded Amount: $400,000.00

Funding Source: _____ % of Funding: _____

MUNIS ORG: _____ MUNIS OBJ: _____ Awarded Amount: _____

Expense String Phase:

A project must have at least one phase identified, this can be used as an additional level of tracking, for example, CIP - Design, Construction, etc. For Grants can be used as reimbursable types, such as transportation, salaries.

(You can create more than one phase and you can default MUNIS ORGs and OBJs, optional)

Phase: Construction MUNIS ORG: 5000375 MUNIS OBJ: 572970

Phase: _____ MUNIS ORG: _____ MUNIS OBJ: _____

Phase: _____ MUNIS ORG: _____ MUNIS OBJ: _____

Contract number: _____ Comments/Other:

GRANTS ONLY:

Grantor Name: SAP22-G2419 STB-JEMEZ RD CONSTRUCTION/SEWERLINE Awarded Amount: 400000.00

AR Charge Code: 5000375.490190 ☐ Grant funds multiple projects (Complete a form for each project)

Grantor Id: 700004 Federal CFDA (if applicable): N/A

(If grants please provide all grant award documents with form) ☑ Attached Grant Documentation

CITY OF SANTA FE

Date: January 15, 2025

To: Governing Body

Regina Wheeler
Regina Wheeler (Jan 15, 2025 15:53 MST)

Via: Regina Wheeler, Public Works Department Director

From: Jennifer Morrow, Complete Streets Division Director
Jennifer Morrow (Jan 15, 2025 14:28 MST)

ACTION:
Request Approval of a Budget Amendment Resolution (BAR) in the Total Amount of $200,000 From FY25 Complete Streets One Time Capital and Operating Funds to CIP WIP Construction for the St. Michaels Drive Intersection Improvements. (Jennifer Morrow, Complete Streets Division Director; jlmorrow@santafenm.gov)

BACKGROUND AND SUMMARY:
This intersection on St. Michaels Drive is a critical pedestrian path for students attending Milagro Middle School and Santa Fe High School and for pedestrians walking to Santa Fe's La Farge Library. Several pedestrian improvements are proposed for the intersection and include the installation of 6-foot pedestrian refuge islands in the median, shortening the length of the pedestrian crossing by reducing the curb radii for vehicles, and implementation of traffic signal improvements for leading pedestrian interval of 5 seconds to give pedestrians a head start into the intersection.

Funding for the project is via the Legislative Appropriation Project 21-F3059 Grant Agreement with NMDOT for $350,000 and this BAR from FY25 One-Capital Funding for traffic signal improvements, pavement markings and related equipment. A Notice of Obligation has been approved by NMDOT and the construction PO issued to the construction contractor. The Grant funds revert on June 30, 2025 and the project is expected to be completed before that date.

Funding Source: FY 25 One-Time Capital Funding and Operating Funding
Fund Name/Number: CIP Streets / 330
Munis Org Name/Number: Streets Roadways / 3309980
Munis Expenditure Object Name/Number: WIP Construction / 572970
Project Ledger Number: ENG2333002-CONSTRUC

ATTACHMENTS:
BAR

Log # *{Finance use only}*:	
Journal # *{Finance use only}*:	

City of Santa Fe, New Mexico
BUDGET AMENDMENT RESOLUTION (BAR)

DEPARTMENT / DIVISION NAME	DATE
Public Works / Complete Streets	12/2/2024

ITEM DESCRIPTION	ORG	OBJECT	PROJECT	INCREASE	DECREASE
EXPENDITURES				*{enter as positive #}*	*{enter as negative #}*
WIP Construction - St. Mike's Intersection	3309980	572970	ENG2333002-CONSTRUC	200,000	
WIP Construction - Signal Rewiring	3650414	572970	ST2536501-REM&REPL		(100,000)
Capital Transfer to 330	3650414	760330		100,000	
Operating Supplies - Intersection/Pavement Markings	1000412	530200	ST2510000-REM&REPL		(25,000)
Service Contracts	1000412	510310			(50,000)
Capital Transfer to 330	1000412	760330		75,000	
Rep & Maint - System Equip	1000416	520150			(25,000)
Capital Transfer to 330	1000416	760330		25,000	
REVENUES				*{enter as negative #}*	*{enter as positive #}*
Capital Transfer from 365	3309980	660365		(100,000)	
Capital Transfer from 100	3309980	660100		(100,000)	
				$ 200,000	$ (200,000)

JUSTIFICATION: *(use additional page if needed)*
--Attach supporting documentation/memo

Transfer of FY 25 One-Time Capital and Operating funding to the St. Mike's intersection improvements project.

{Complete section below if BAR results in a net change to ANY Fund}	
Fund(s) Affected	Fund Balance Increase/(Decrease)
TOTAL:	**0**

Halona Crowe — 12/2/2024
Prepared By *{print name}* — Date

Division Director Signature — Date
Regina Wheeler
Regina Wheeler (Jan 15, 2025 15:53 MST)

Department Director Signature — Date

{Use this form for Finance Committee/ City Council agenda items ONLY}

CITY COUNCIL APPROVAL

City Council Approval Date

Agenda Item #:

Andy Hopkins
Budget Officer — Date

Finance Director *{≤ $5,000}* — Date

City Manager *{≤ $60,000}* — Date

CITY OF SANTA FE

Memorandum

Date: November 5, 2024

To: Governing Body, Public Works and Utilities Committee, Finance Committee

From: Regina Wheeler, Public Works Department Director RW

RE: Authorized Representatives and Agents for DFA, Appropriation ID number I3321 and NMDOT Control Number C5243321

EXECUTIVE SUMMARY:
The Resolution designates authorized representatives and agents for New Mexico Department of Finance and Administration (DFA), appropriation ID Number I3321 and New Mexico Department of Transportation (NMDOT) Control Number C5243321 ("Grant Agreement"). The Grant Agreement makes available one hundred thousand dollars ($100,000), appropriated by the New Mexico State Legislature for a project to acquire rights of way for and to plan, design, and construct a pedestrian underpass on Saint Michael's Drive, a New Mexico Rail Runner Express railroad crossing, and a Santa Fe Rail Trail crossing.

BACKGROUND:
The project was ranked 18th in priority on the City's 2025-2029 Infrastructure Capital Improvement Plan. The total cost of the project is estimated at eight million dollars ($8,000,000), and, to date, four million nine hundred eighty-five thousand dollars ($4,985,000) has been funded.

The New Mexico Department of Transportation, through Article X. B. (v) of the Grant Agreement, requires that the City of Santa Fe as the grantee, to agree that the "governing body has duly adopted or passed as an official act a resolution, motion or similar action authorizing the person identified as the official representative of the Grantee to sign the Agreement and to sign Requests for Payment". Adoption of this Resolution will satisfy this requirement and allow the City to enter into the Grant Agreement. The Grant Agreement will be presented to the Governing Body for action separate from this Resolution; and this Resolution will not be implicated if the Governing Body does not later approve the grant agreement.

ATTACHMENTS:
Resolution
FIR

CITY OF SANTA FE, NEW MEXICO

RESOLUTION NO. 2024-__

INTRODUCED BY:

Councilor Amanda Chavez

A RESOLUTION

AUTHORIZING REPRESENTATIVES AND AGENTS FOR NEW MEXICO DEPARTMENT OF FINANCE AND ADMINISTRATION, APPROPRIATION ID NUMBER I3321, NEW MEXICO DEPARTMENT OF TRANSPORTATION CONTROL NUMBER C5243321, TO ACQUIRE RIGHTS OF WAY FOR AND TO PLAN, DESIGN, AND CONSTRUCT A PEDESTRIAN UNDERPASS ON SAINT MICHAEL'S DRIVE.

WHEREAS, in the Laws of 2024, Senate Bill 275, the New Mexico Legislature made an appropriation to the New Mexico Department of Transportation ("NMDOT"), for funds from which NMDOT is making available to the City of Santa Fe ("Grantee") through the New Mexico Department of Finance and Administration Appropriation Number I3321, NMDOT Control Number C5243321 ("Agreement"), incorporated as Attachment A, in the amount of one hundred thousand dollars ($100,000), to acquire rights of way for and to plan, design, and construct a pedestrian underpass at the intersection of Saint Michael's Drive, a New Mexico Rail Runner Express railroad crossing, and a Santa Fe Rail Trail crossing in the city of Santa Fe and Santa Fe County; and

WHEREAS, the Governing Body adopted Resolution No. 2023-32 which identified St. Michael's Rail Trail Underpass Project as number eighteen on the Infrastructure and Capital Improvement plan for Fiscal Year 2025-2029; and

WHEREAS, Article X. B. (v) of the Agreement, states that "the Grantee's governing body has duly adopted or passed as an official act a resolution, motion or similar action authorizing the person identified as the official representative of the Grantee to sign the Agreement and to sign Requests for Payment"; and

WHEREAS, Item Number 5, page 16 of 16 of "NMDOT Attachment A" of the Agreement, states that the Grantee shall "adopt a written resolution of support for the Project, including as applicable an assumption of ownership, liability, and maintenance responsibility for the scope, or related amenities and required funding to support the Project"; and

WHEREAS, in a letter dated August 24, 2023, the New Mexico Department of Finance and Administration ("DFA") took the position that it required the City to initiate a fiscal agent relationship in order for the City to utilize its current State Capital appropriations; and

WHEREAS, as a result of the DFA's position, the City entered into an intergovernmental services agreement, incorporated as Attachment B, with North Central Economic Development District ("NCEDD") for fiscal agent services, in which NCEDD agreed to review and sign Requests for Payment for permissible expenditures, on December 19, 2023.

NOW, THEREFORE, BE IT RESOLVED BY THE GOVERNING BODY OF THE CITY OF SANTA FE, that whenever written notices, including written decisions, are to be given or received, related to the Agreement, the following provisions shall apply:

1. The person listed below, or their successor, is the Grantee's official representative authorized to sign the Agreement:

   Grantee: City of Santa Fe

   Name: Alan Webber

Title: Mayor

Address: PO Box 909

Santa Fe, NM, 87504-0909

Email: mayor@santafenm.gov

Telephone: (505) 955-6590

2. The person listed below, or their successor, is the Grantee's Fiscal Officer or Fiscal Agent concerning reviewing and signing Requests for Payment for permissible expenditures:

Grantee: City of Santa Fe

Name: Felicity Fonseca

Title: Community Development Director, North Central New Mexico Economic Development District

Address: 644 Don Gaspar Ave.

Santa Fe, NM 87505

Email: felicityf@ncnmedd.com

Telephone: (505) 356-9098

BE IT FURTHER RESOLVED that the Grantee supports the project, including as applicable an assumption of ownership, liability, and maintenance responsibility for the scope, or related amenities and required funding to support the project, as limited by law, including the limitations in the New Mexico Tort Claims Act.

PASSED, APPROVED, and ADOPTED this _____day of _____, 2025.

_____

ALAN WEBBER, MAYOR

ATTEST:

_____

ANDRÉA SALAZAR, CITY CLERK

APPROVED AS TO FORM:



_____

ERIN K. McSHERRY, CITY ATTORNEY

Legislation/2025/Resolutions/C5243321 St. Michaels Rail Trail Underpass

Attachment A

Contract Number: _____
Vendor Number: 0000054360
Control Number: C5243321

STATE OF NEW MEXICO
DEPARTMENT OF TRANSPORTATION
FUND 93100 CAPITAL APPROPRIATION PROJECT

THIS AGREEMENT is between the Department of Transportation, hereinafter called the "Department" or abbreviation such as "NMDOT", and City of Santa Fe, hereinafter called the "Grantee". This Agreement is effective as of the date of the last party to sign it on the signature page below.

RECITALS

WHEREAS, in the Laws of 2024, SB 275, Chapter 66, Section 33, Subsection 91, the Legislature made an appropriation to the Department, funds from which the Department is making available to the Grantee pursuant to this Agreement; and

WHEREAS, the Department is granting to Grantee, and the Grantee is accepting the grant of, funds from this appropriation, in accordance with the terms and conditions of this Agreement; and

WHEREAS, pursuant to the NMSA 1978, Section 67-3-28, as amended, and State Highway Commission Policy No. 44, the Department has the authority to enter into this Grant Agreement.

AGREEMENT

NOW, THEREFORE, in consideration of the mutual covenants and obligations contained herein, the parties hereby mutually agree as follows:

ARTICLE I. PROJECT DESCRIPTION, AMOUNT OF GRANT AND REVERSION DATE

A. The project that is the subject of this Agreement is described as follows:

DFA Appropriation ID I3321 NMDOT Control Number C5243321 **$100,000**
APPROPRIATION REVERSION DATE: 6/30/2028
Laws of 2024, Chapter 66, Section 33, Subsection 91, One Hundred Thousand Dollars and No Cents ($100,000), to acquire rights of way for and to plan, design and construct a pedestrian underpass at the intersection of Saint Michael's drive, a New Mexico rail runner express railroad crossing and a Santa Fe rail trail crossing in Santa Fe in Santa Fe county.

The Grantee's total reimbursements shall not exceed One Hundred Thousand Dollars and No Cents $100,000 (the "Appropriation Amount") minus the allocation for Art in Public Places ("AIPP amount")[1], if applicable, (), which equals () (the "Adjusted Appropriation Amount").

In the event of a conflict among the Appropriation Amount, the Reversion Date, as defined herein and/or the purpose of the Project, as set forth in this Agreement, and the corresponding appropriation language in the laws cited above in this Article I(A), the language of the laws cited herein shall control.

This project is referred to throughout the remainder of this Agreement as the "Project"; the information contained in Article I(A) is referred to collectively throughout the remainder of this Agreement as the "Project Description." Optional Attachment A sets forth additional or more stringent requirements and conditions, which are incorporated by this reference as if set forth fully herein. If Optional Attachment A imposes more stringent requirements than any requirement set forth in this Agreement, the more stringent requirements of Attachment A shall prevail, in the event of irreconcilable conflict. The Grantee shall reference the Project's number in all correspondence with and submissions to the Department concerning the Project, including, but not limited to, Requests for Payment and reports.

ARTICLE II. LIMITATION ON DEPARTMENT'S OBLIGATION TO MAKE GRANT DISBURSEMENT TO GRANTEE

A. Upon the Effective Date of this Agreement, for permissible purposes within the scope of the Project Description, the Grantee shall only be reimbursed monies for which the Department has issued and the Grantee has received a Notice of Department's Obligation to Reimburse[2] Grantee (hereinafter referred to as "Notice of Obligation"). This Grant Agreement and the disbursement of any and all amounts of the above referenced Adjusted Appropriation Amount are expressly conditioned upon the following:

(i) Irrespective of any Notice of Obligation, the Grantee's expenditures shall be made on or before the Reversion Date and, if applicable, an Early Termination Date (i.e., the goods have been delivered and accepted or the title to the goods has been transferred to the Grantee and/or the services have been rendered for the Grantee); and

(ii) The total amount received by the Grantee shall not exceed the lesser of: (a) the Adjusted Appropriation Amount identified in Article I(A) herein or (b) the total of all amounts stated in the Notice(s) of Obligation evidencing that the Department has received and accepted the Grantee's Third Party Obligation(s), as defined in subparagraph iii of this Article II(A); and

(iii) The Grantee's expenditures were made pursuant to the State Procurement Code and execution of binding written obligations or purchase orders with third party contractors or vendors for the provision of services, including professional services, or the purchase of tangible personal property and real property for the Project, hereinafter referred to as "Third Party Obligations"; and

(iv) The Grantee's submittal of timely Requests for Payment in accordance with the procedures set forth in Article IX of this Agreement; and

[1] The AIPP amount is "an amount of money equal to one percent or two hundred thousand dollars ($200,000), whichever is less, of the amount of money appropriated for new construction or any major renovation exceeding one hundred thousand dollars ($100,000)." Section 13-4A-4 NMSA 1978.

[2] "Reimburse" as used throughout this Agreement includes Department payments to the Grantee for invoices received, but not yet paid, by the Grantee from a third party contractor or vendor, if the invoices comply with the provisions of this Agreement and are a valid liability of the Grantee.

(v) In the event that capital assets acquired with Project funds are to be sold, leased, or licensed to or operated by a private entity, the sale, lease, license, or operating agreement:

a. must be approved by the applicable oversight entity (if any) in accordance with law; or
b. if no oversight entity is required to approve the transaction, the Department must approve the transaction as complying with law.

Prior to the sale, lease, license, or operating agreement being approved pursuant to Articles II(A)(v)(a) and II(A)(v)(b) herein, the Department may, in its sole and absolute discretion and unless inconsistent with State Board of Finance imposed conditions, reimburse the Grantee for necessary expenditures incurred to develop the Project sufficiently to make the sale, lease, license, or operating agreement commercially feasible, such as plan and design expenditures; and

(vi) The Grantee's submission of documentation of all Third Party Obligations and amendments thereto (including terminations) to the Department and the Department's issuance and the Grantee's receiving of a Notice of Obligation for a particular amount in accordance with the terms of this Agreement shall be governed by the following:

a. The Grantee shall submit to the Department one copy of all Third Party Obligations and amendments thereto (including terminations) as soon as possible after execution by the Third Party **but prior to execution by the Grantee.**

b. Grantee acknowledges and agrees that if it chooses to enter into a Third Party Obligation prior to receiving a Notice of Obligation that covers the expenditure, it is solely responsible for such obligations.

c. The Department may, in its sole and absolute discretion, issue to Grantee a Notice of Obligation for the particular amount of that Third Party Obligation that only obligates the Department to reimburse Grantee's expenditures made on or before the Reversion Date or an Early Termination Date. The current Notice of Obligation form is attached to this Agreement as Exhibit 2.

d. The date the Department signs the Notice of Obligation is the date that the Department's Notice of Obligation is effective. After that date, the Grantee is authorized to budget the particular amount set forth in the Notice of Obligation, execute the Third Party Obligation and request the Third Party to begin work. Payment for any work performed or goods received prior to the effective date of the Notice of Obligation is wholly and solely the obligation of the Grantee.

B. The Grantee shall implement, in all respects, the Project. The Grantee shall provide all necessary qualified personnel, material, and facilities to implement the Project. The Grantee shall finance its share (if any) of the costs of the Project, including all Project overruns.

C. Project funds shall not be used for purposes other than those specified in the Project Description.

D. Unless specifically allowed by law, Project funds cannot be used to reimburse Grantee for indirect Project costs.

ARTICLE III. NOTICE PROVISIONS AND GRANTEE AND DEPARTMENT DESIGNATED REPRESENTATIVES

Whenever written notices, including written decisions, are to be given or received, related to this Agreement, the following provisions shall apply.

The Grantee designates the person(s) listed below, or their successor, as their official representative(s) concerning all matters related to this Agreement:

Grantee: City of Santa Fe
Name: David Chapman
Title: Grants Administrator
Address: P.O. Box 909, Santa Fe, New Mexico 87504
Email: dachapman@ci.santa-fe.nm.us
Telephone: 505-955-2012

The Grantee designates the person(s) listed below, or their successor, as their Fiscal Officer or Fiscal Agent concerning all matters related to this Agreement:

Grantee: _____
Name: _____
Title: _____
Address: _____
Email: _____
Telephone: _____

The Department designates the persons listed below, or their successors, as the Points of Contact for matters related to this Agreement.

Department: Department of Transportation District 5 Office
Name: Amanda Nino
Title: Capital Outlay District Coordinator
Address: P.O. Box 4127, Santa Fe, NM 87502
Email: Amanda.Nino@dot.nm.gov
Telephone: 505-660-6357

The Grantee and the Department agree that either party shall send all notices, including written decisions, related to this Agreement to the above named persons by email or regular mail. In the case of mailings, notices shall be deemed to have been given and received upon the date of the receiving party's actual receipt or five calendar days after mailing, whichever shall first occur. In the case of email transmissions, the notice shall be deemed to have been given and received on the date reflected on the delivery receipt of email.

ARTICLE IV. REVERSION DATE, TERM, DEADLINE TO EXPEND FUNDS

A. As referenced in Article I(A), the applicable law establishes a date by which Project funds must be expended by Grantee, which is referred to throughout the remainder of this Agreement as the "Reversion Date." Upon being duly executed by both parties, this Agreement shall be effective as of the date of execution by the Department. It shall terminate on 6/30/2028 the Reversion Date unless Terminated Before Reversion Date ("Early Termination") pursuant to Article V herein.

B. The Project's funds must be expended on or before the Reversion Date and, if applicable, Early Termination Date of this Agreement. For purposes of this Agreement, it is not sufficient for the Grantee to encumber the Project funds on its books on or before the Project's Reversion Date or Early Termination Date. Funds are expended and an expenditure has occurred as of the date that a particular quantity of goods are delivered to and received by the Grantee or title to the goods is transferred to the Grantee and/or as of the date particular services are rendered for the Grantee. Funds are ***not*** expended and an expenditure has ***not*** occurred as of the date they are encumbered by the Grantee pursuant to a contract or purchase order with a third party.

ARTICLE V. EARLY TERMINATION

A. **Early Termination Before Reversion Date Due to Completion of the Project or Complete Expenditure of the Adjusted Appropriation or Violation of this Agreement**

Early Termination includes:

(i) Termination due to completion of the Project before the Reversion Date; or

(ii) Termination due to complete expenditure of the Adjusted Appropriation Amount before the Reversion Date; or

(iii) Termination for violation of the terms of this Agreement; or

(iv) Termination for suspected mishandling of public funds, including but not limited to, fraud, waste, abuse, and conflicts of interest.

Either the Department or the Grantee may early terminate this Agreement prior to the Reversion Date by providing the other party with a minimum of fifteen (15) days' advance, written notice of early termination. Grantee hereby waives any rights to assert an impairment of contract claim against the Department or the State of New Mexico in the event of Early Termination of this Agreement by the Department pursuant to Article V(A).

B. **Early Termination Before Reversion Date Due to Non-appropriation**

The terms of this Agreement are expressly made contingent upon sufficient appropriations and authorization being made by the Legislature of New Mexico for the performance of this Agreement. Throughout this Agreement the term "non-appropriate" or "non-appropriation" includes the following actions by the New Mexico Legislature: deauthorization, reauthorization or revocation of a prior authorization. The Legislature may choose to non-appropriate the Appropriation referred to in Article I and, if that occurs, the Department shall early terminate this Agreement for non-appropriation by giving the Grantee written notice of such termination, and such termination shall be effective as of the effective date of the law making the non-appropriation. The Department's decision as to whether sufficient appropriations or authorizations are available shall be accepted by the Grantee and shall be final. Grantee hereby waives any rights to assert an impairment of contract claim against the Department or the State of New Mexico in the event of Early Termination of this Agreement by the Department pursuant to Article V(B).

C. **Limitation on Department's Obligation to Make Grant Disbursements to Grantee in the Event of Early Termination**

In the event of Early Termination of this Agreement by either party, the Department's sole and absolute obligation to reimburse the Grantee is expressly conditioned upon the limitations set forth Article II.

ARTICLE VI. SUSPENSION OF NEW OR FURTHER OBLIGATIONS

A. The Department may choose, in its sole and absolute discretion, to provide written notice to the Grantee to suspend entering into new and further obligations. Upon the receipt of such written notice by the Grantee:

(i) The Grantee shall immediately suspend entering into new or further written obligations with third parties; and

(ii) The Department will suspend the issuance of any new or further Notice of Obligation under this Agreement; and

(iii) The Department may direct the Grantee to implement a corrective action plan in accordance with Article VI(D) herein.

B. In the event of Suspension of this Agreement, the Department's sole and absolute obligation to reimburse the Grantee is expressly conditioned upon the limitations set forth in Article II herein.

C. A suspension of new or further obligations under this Agreement shall remain in effect unless or until the date the Grantee receives written notice given by the Department informing the Grantee that the Suspension has been lifted or that the Agreement has been Early Terminated in accordance with Article V herein. If the Suspension is lifted, the Department will consider further requests for Notice of Obligation.

D. Corrective Action Plan in the Event of Suspension

In the event that the Department chooses, in its sole and absolute discretion to direct the Grantee to suspend entering into new or further written obligations with third parties pursuant to Article VI(A), the Department may, but is not obligated to, require the Grantee to develop and implement a written corrective action plan to remedy the grounds for the Suspension. Such corrective action plan must be approved by the Department and be signed by the Grantee. Failure to sign a corrective action plan or meet the terms and deadlines set forth in the signed corrective action plan, is hereby deemed a violation of the terms of this Agreement for purposes of Early Termination, Article V(A)(iii). The corrective action plan is in addition to, and not in lieu of, any other equitable or legal remedy, including but not limited to Early Termination.

ARTICLE VII. AMENDMENT

This Agreement shall not be altered, changed, or amended except by instrument in writing duly executed by both the parties hereto.

ARTICLE VIII. REPORTS

A. Database Reporting

The Grantee shall report quarterly Project activity by entering such Project information as the Department and the Department of Finance and Administration may require, such information entered directly into a database maintained by the Department of Finance and Administration (http://cpms.dfa.state.nm.us). Additionally, the Grantee shall certify on the Request for Payment form (Exhibit 1) that updates have been maintained and are current in the database. The Grantee hereby acknowledges that failure to perform and/or certify updates into the database will delay or potentially jeopardize the reimbursement of funds. The Department shall give Grantee a minimum of thirty (30) days' advance written notice of any changes to the information the Grantee is required to report.

Quarterly reports shall be due on the last day of the month that is 30 days prior to the end of the quarter following execution of this Agreement by the Department and ending during the quarter of the submission of the final request for reimbursement for the Project, or the following quarter.

B. Requests for Additional Information/Project Inspection

During the term of this Agreement and during the period of time during which the Grantee must maintain records pursuant to Article VIII, the Department may:

(i) request such additional information regarding the Project as it deems necessary; and

(ii) conduct, at reasonable times and upon reasonable notice, onsite inspections of the Project.

Grantee shall respond to such requests for additional information within a reasonable period of time, as established by the Department.

ARTICLE IX. REQUEST FOR PAYMENT PROCEDURES AND DEADLINES

A. The Grantee shall request payment by submitting a Request for Payment, in the form attached hereto as Exhibit 1. Payment requests are subject to the following procedures:

(i) The Grantee must submit a Request for Payment; and

(ii) Each Request for Payment must contain proof of payment by the Grantee or liabilities incurred by the Grantee showing that the expenditures are valid or are liabilities incurred by the Grantee in the form of actual unpaid invoices received by the Grantee for services rendered by a third party or items of tangible personal property received by the Grantee for the implementation of the Project; provided, however, that the Grantee may be reimbursed for unpaid liabilities only if the Department, in its sole and absolute discretion, agrees to do so and in accordance with any special conditions imposed by the Department.

(iii) In cases where the Grantee is submitting a Request for Payment to the Department based upon invoices received, but not yet paid, by the Grantee from a third party contractor or vendor, if the invoices comply with the provisions of this Agreement and are a valid liability of the Grantee, the Grantee shall make payment to those contractors or vendors within five (5) business days from the date of receiving reimbursement from the Department or such shorter period of time as the Department may prescribe in writing. The Grantee is required to certify to the Department proof of payment to the third party contractor or vendor within ten (10) business days from the date of receiving reimbursement from the Department.

B. The Grantee must obligate 5% of the Adjusted Appropriation Amount within six months of acceptance of the grant agreement and must have expended no less than 85% of the Adjusted Appropriation Amount six months prior to the reversion date.

C. **Deadlines**

Requests for Payments shall be submitted by Grantee to the Department on the earlier of:

(i) Immediately as they are received by the Grantee but at a minimum thirty (30) days from when the expenditure was incurred or liability of the Grantee was ~~a~~approved as evidenced by an unpaid invoice received by the Grantee from a third party contractor or vendor; or

(ii) Twenty (20) days from date of Early Termination; or

(iii) Twenty (20) days from the Reversion Date.

D. The Grantee's failure to abide by the requirements set forth in Article II and Article IX herein will result in the denial of its Request for Payment or will delay the processing of Requests for Payment. The Department has the right to reject a payment request for the Project unless and until it is satisfied that the expenditures in the Request for Payment are for permissible purposes within the meaning of the Project Description and that the expenditures and the Grantee are otherwise in compliance with this Agreement, including but not limited to, compliance with the reporting requirements and the requirements set forth in Article II herein to provide Third Party Obligations and the Deadlines set forth in Article IX herein. The Department's ability to reject any Request for Payment is in addition to, and not in lieu of, any other legal or equitable remedy available to the Department due to Grantee's violation of this Agreement.

ARTICLE X. PROJECT CONDITIONS AND RESTRICTIONS; REPRESENTATIONS AND WARRANTIES

A. The following general conditions and restrictions are applicable to the Project:

(i) The Project's funds must be spent in accordance with all applicable state laws, regulations, policies, and guidelines, including, but not limited to, the State Procurement Code (or local procurement ordinance, where applicable).

(ii) The Project must be implemented in accordance with the New Mexico Public Works Minimum Wage Act, Section 13-4-10 through 13-4-17 NMSA 1978, as applicable. Every contract or project in excess of sixty thousand dollars ($60,000) that the Grantee is a party to for construction, alteration, demolition or repair or any combination of these, including painting and decorating, of public buildings, public works or public roads and that requires or involves the employment of mechanics, laborers or both shall contain a provision stating the minimum wages and fringe benefits to be paid to various classes of laborers and mechanics, shall be based upon the wages and benefits that will be determined by the New Mexico Department of Workforce Solutions to be prevailing for the corresponding classes of laborers and mechanics employed on contract work of a similar nature in the locality. Further, every contract or project shall contain a stipulation that the contractor, subcontractor, employer or a person acting as a contractor shall pay all mechanics and laborers employed on the site of the project, unconditionally and not less often than once a week and without subsequent unlawful deduction or rebate on any account, the full amounts accrued at time of payment computed at wage rates and fringe benefit rates not less than those determined pursuant to Section 13-4-11 (B) NMSA 1978 to be the prevailing wage rates and prevailing fringe benefit rates issued for the project.

(iii) The Project may only benefit private entities in accordance with applicable law, including, but not limited to, Article IX, Section 14 of the Constitution of the State of New Mexico, the "Anti-Donation Clause."

(iv) The Grantee shall not for a period of 10 years from the date of this agreement convert any property acquired, built, renovated, repaired, designed or developed with the Project's funds to uses other than those specified in the Project Description without the Department's and the Board of Finance's express, advance, written approval, which may include a requirement to reimburse the State for the cost of the project, transfer proceeds from the disposition of property to the State, or otherwise provide consideration to the State.

(v) The Grantee shall comply with all federal and state laws, rules and regulations pertaining to equal employment opportunity. In accordance with all such laws, rules and regulations the Grantee agrees to assure that no person shall, on the grounds of race, color, national origin, sex, sexual preference, age or handicap, be excluded from employment with Grantee, be excluded

from participation in the Project, be denied benefits or otherwise be subject to discrimination under, any activity performed under this Agreement. If Grantee is found to be not in compliance with these requirements during the life of this Agreement, Grantee agrees to take appropriate steps to correct any deficiencies. The Grantee's failure to implement such appropriate steps within a reasonable time constitutes grounds for terminating this Agreement.

B. The Grantee hereby represents and warrants the following:

(i) The Grantee has the legal authority to receive and expend the Project's funds.

(ii) This Agreement has been duly authorized by the Grantee, the person executing this Agreement has authority to do so, and, once executed by the Grantee, this Agreement shall constitute a binding obligation of the Grantee, enforceable according to its terms.

(iii) This Agreement and the Grantee's obligations hereunder do not conflict with any law or ordinance or resolution applicable to the Grantee, the Grantee's charter (if applicable), or any judgment or decree to which the Grantee is subject.

(iv) The Grantee has independently confirmed that the Project Description, including, but not limited to, the amount and Reversion Date, is consistent with the underlying appropriation in law.

(v) The Grantee's governing body has duly adopted or passed as an official act a resolution, motion, or similar action authorizing the person identified as the official representative of the Grantee to sign the Agreement and to sign Requests for Payment.

(vi) The Grantee shall abide by New Mexico laws regarding conflicts of interest, governmental conduct and whistleblower protection. The Grantee specifically agrees that no officer or employee of the local jurisdiction or its designees or agents, no member of the governing body, and no other public official of the locality who exercises any function or responsibility with respect to this Grant, during their tenure or for one year thereafter, shall have any interest, direct or indirect, in any contract or subcontract, or the proceeds thereof, for work to be performed or goods to be received, pursuant to this Grant. Further, Grantee shall require all of its contractors to incorporate in all subcontracts the language set forth in this paragraph prohibiting conflicts of interest.

(vii) No funds have been paid or will be paid, by or on behalf of the Grantee, to any person for influencing or attempting to influence an officer or employee of this or any agency or body in connection with the awarding of any Third Party Obligation and that the Grantee shall require certifying language prohibiting lobbying to be included in the award documents for all subawards, including subcontracts, loans and cooperative agreements. All subrecipients shall be required to certify accordingly.

ARTICLE XI. STRICT ACCOUNTABILITY OF RECEIPTS AND DISBURSEMENTS; PROJECT RECORDS

A. The Grantee shall be strictly accountable for receipts and disbursements relating to the Project's funds. The Grantee shall follow generally accepted accounting principles, and, if feasible, maintain a separate bank account or fund with a separate organizational code, for the funds to assure separate budgeting and accounting of the funds.

B. For a period of six (6) years following the Project's completion, the Grantee shall maintain all Project related records, including, but not limited to, all financial records, requests for proposals, invitations to bid, selection and award criteria, contracts and subcontracts, advertisements, minutes of pertinent meetings, as well

as records sufficient to fully account for the amount and disposition of the total funds from all sources budgeted for the Project, the purpose for which such funds were used, and such other records as the Department shall prescribe.

C. The Grantee shall make all Project records available to the Department, the Department of Finance and Administration, and the New Mexico State Auditor upon request. With respect to the funds that are the subject of this Agreement, if the State Auditor or the Department of Finance and Administration finds that any or all of these funds were improperly expended, the Grantee may be required to reimburse to the State of New Mexico, to the originating fund, any and all amounts found to be improperly expended.

ARTICLE XII. IMPROPERLY REIMBURSED FUNDS

If the Department determines that part or all of the Appropriation Amount was improperly reimbursed to Grantee, including but not limited to, Project funds reimbursed to Grantee based upon fraud, mismanagement, misrepresentation, misuse, violation of law by the Grantee, or violation of this Agreement, the Grantee shall return such funds to the Department for disposition in accordance with law.

ARTICLE XIII. LIABILITY

Neither party shall be responsible for liability incurred as a result of the other party's acts or omissions in connection with this Agreement. Any liability incurred in connection with this Agreement is subject to immunities and limitations of the New Mexico Tort Claims Act.

ARTICLE XIV. SCOPE OF AGREEMENT

This Agreement constitutes the entire and exclusive agreement between the Grantee and Department concerning the subject matter hereof. The Agreement supersedes any and all prior or contemporaneous agreements, understandings, discussions, communications, and representations, written or verbal.

ARTICLE XV. REQUIRED NON-APPROPRIATIONS CLAUSE IN CONTRACTS FUNDED IN WHOLE OR PART BY FUNDS MADE AVAILABLE UNDER THIS AGREEMENT

The Grantee acknowledges, warrants, and agrees that Grantee shall include a “non-appropriations” clause in all contracts between it and other parties that are (i) funded in whole or part by funds made available under this Agreement and (ii) entered into after the effective date of this Agreement that states:

“The terms of this Agreement are contingent upon sufficient appropriations and authorization being made by the Legislature of New Mexico for the performance of this Agreement. If sufficient appropriations and authorization are not made by the Legislature, the City of Santa Fe may immediately terminate this Agreement by giving Contractor written notice of such termination. The City of Santa Fe’s decision as to whether sufficient appropriations are available shall be accepted by the Contractor and shall be final. Contractor hereby waives any rights to assert an impairment of contract claim against the City of Santa Fe or the Department of Transportation or the State of New Mexico in the event of immediate or Early Termination of this Agreement by the City of Santa Fe or the Department”

ARTICLE XVI. REQUIRED TERMINATION CLAUSE IN CONTRACTS FUNDED IN WHOLE OR PART BY FUNDS MADE AVAILABLE UNDER THIS AGREEMENT

Grantee acknowledges, warrants, and agrees that Grantee shall include the following termination clause in all contracts that are (i) funded in whole or part by funds made available under this Agreement and (ii) entered into after the effective date of this Agreement:

"This contract is funded in whole or in part by funds made available under a Department of Transportation Grant Agreement. Should the Department of Transportation early terminate the grant agreement, the City of Santa Fe may early terminate this contract by providing Contractor written notice of such termination. In the event of termination pursuant to this paragraph, the City of Santa Fe only liability shall be to pay Contractor for acceptable goods delivered and services rendered before the termination date."

Grantee hereby waives any rights to assert an impairment of contract claim against the Department or the State of New Mexico in the event of Early Termination of this Agreement by the Department.

XVII. COMPLIANCE WITH UNIFORM FUNDING CRITERIA.

A. Throughout the term of this Agreement, Grantee shall:

1. submit all reports of annual audits and agreed upon procedures required by Section 12-6-3(A)-(B) NMSA 1978 by the due dates established in 2.2.2 NMAC, reports of which must be a public record pursuant to Section 12-6-5(A) NMSA 1978 within forty-five days of delivery to the State Auditor;
2. have a duly adopted budget for the current fiscal year approved by its budgetary oversight agency (if any);
3. timely submit all required financial reports to its budgetary oversight agency (if any); and
4. have adequate accounting methods and procedures to expend grant funds in accordance with applicable law and account for and safeguard grant funds and assets acquired by grant funds.

B. In the event Grantee fails to comply with the requirements of Paragraph A of this Article XVII, the Department may take one or more of the following actions:

1. suspend new or further obligations pursuant to Article VI(A) of this Agreement;
2. require the Grantee to develop and implement a written corrective action plan pursuant to Article VI(D) of this Agreement to remedy the non-compliance;
3. impose special grant conditions to address the non-compliance by giving the Grantee notice of such special conditions in accordance with Article III of this Agreement; the special conditions shall be binding and effective on the date that notice is deemed to have been given pursuant to Article III; or
4. terminate this Agreement pursuant to Article V(A) of this Agreement.

ARTICLE XVIII. SEVERANCE TAX BOND AND GENERAL OBLIGATION BOND PROJECT CLAUSES

A. Grantee acknowledges and agrees that the underlying appropriation for the Project is a severance tax bond or general obligation bond appropriation, and that the associated bond proceeds are administered by the New Mexico State Board of Finance (SBOF), an entity separate and distinct from the Department. Grantee acknowledges and agrees that (i) it is Grantee's sole and absolute responsibility to determine through SBOF staff what (if any) conditions are currently imposed on the Project; (ii) the Department's failure to inform Grantee of a SBOF imposed condition does not affect the validity or enforceability of the condition; (iii) the

SBOF may in the future impose further or different conditions upon the Project; (iv) all SBOF conditions are effective without amendment of this Agreement; (v) all applicable SBOF conditions must be satisfied before the SBOF will release to the Department funds subject to the condition(s); and (vi) the Department's obligation to reimburse Grantee from the Project is contingent upon the then current SBOF conditions being satisfied.

B. Grantee acknowledges and agrees that the SBOF may in its sole and absolute discretion remove a project's assigned bond proceeds if the project doesn't proceed sufficiently. Entities must comply with the requirement to encumber five percent (5%) of Project funds within six months of bond issuance as certified by the grantee in the Bond Questionnaire and Certification documents submitted to the SBOF. Failure to comply may result in the bond proceeds reassignment to a new ready project. If this should occur this grant agreement will be suspended until the entity has demonstrated readiness as determined by the SBOF and the Department.

C. Grantee acknowledges and agrees that this Agreement is subject to the SBOF's Bond Project Disbursements rule, NMAC 2.61.6, as may be amended or re-codified. The rule provides definitions and interpretations of grant language for the purpose of determining whether a particular activity is allowable under the authorizing language of the agreement.

[THIS SPACE LEFT BLANK INTENTIONALLY]

IN WITNESS WHEREOF, the parties have duly executed this Agreement as of the date of execution by the Department.

GRANTEE

_____
Signature of Official with Authority to Bind Grantee

_____
Entity Name

By: _____
(Type or Print Name)

Its: _____
(Type or Print Title)

_____
Date

DEPARTMENT OF TRANSPORTATION

_____
By:

Its: Cabinet Secretary or Designee

_____
Date

REVIEWED AND APPROVED AS TO FORM AND LEGAL SUFFICIENCY BY THE DEPARTMENT'S OFFICE OF GENERAL COUNSEL

_____
By: Aaron Frankland or Designee

Its: Deputy General Counsel

_____
Date

CITY OF SANTA FE:

SEE PAGE 13 OF AGREEMENT

_____

ALAN WEBBER, MAYOR

DATE:_____

ATTEST:

_____

GERALYN CARDENAS, INTERIM CITY CLERK

CITY ATTORNEY'S OFFICE:

Marcos Martinez

Marcos Martinez (Nov 5, 2024 13:35 MST)

_____

SENIOR ASSISTANT CITY ATTORNEY

APPROVED FOR FINANCES:

_____

EMILY OSTER, FINANCE DIRECTOR

STATE OF NEW MEXICO
CAPITAL GRANT PROJECT
Request for Payment Form
Exhibit 1

I.	**Grantee Information**	**II.**	**Payment Computation**
	(Make sure information is complete & accurate)	A.	Payment Request No.
A.	Grantee:	B.	Grant Amount:
B.	Address:	C.	AIPP Amount *(If Applicable)*:
	(Complete Mailing, including Suite, if applicable)	D.	Funds Requested to Date:
		E.	Amount Requested this Payment:
		F.	Reversion Amount (If *Applicable*):
	City State Zip	G.	Grant Balance:
C.	Phone No:	H.	☐ GF ☐ GOB ☐ STB (*attach wire if first draw*)
D.	Grant No:	I.	☐ Final Request for Payment (*if Applicable*)
E.	Project Title:		
F.	Grant Expiration Date:		

III. **Fiscal Year :** _____

(The State of NM Fiscal Year is July 1, 20XX through June 30, 20XX of the following year)

IV. ☐ **Reporting Certification:** I hereby certify to the best of my knowledge and belief, that database reporting is up to date; to include the accuracy of expenditures and grant balance, project status, project phase, achievements and milestones; and in compliance with Article VIII of the Capital Outlay Grant Agreement.

V. ☐ **Compliance Certification:** Under penalty of law, I hereby certify to the best of my knowledge and belief, the above information is correct; expenditures are properly documented, and are valid expenditures or actual receipts; and that the grant activity is in full compliance with Article IX, Sec. 14 of the New Mexico Constitution known as the "anti donation" clause.

Grantee Fiscal Officer or **Fiscal Agent** (*if applicable*)	**Grantee Representative**
Printed Name	Printed Name
Date:	Date:

(State Agency Use Only)

Vendor Code: _____ **Fund No.:** _____ **Loc No.:** _____

I certify that the State Agency financial and vendor file information agree with the above submitted information.

Division Fiscal Officer	Date	Division Project Manager	Date

NOTICE OF OBLIGATION TO REIMBURSE GRANTEE
EXHIBIT 2

Notice of Obligation to Reimburse Grantee [# 1]

DATE: [_____]

TO: Department Representative: [_____,_____]
FROM: Grantee: [_____]
Grantee Official Representative: [_____]

SUBJECT: Notice of Obligation to Reimburse Grantee
Grant Number: [_____]
Grant Termination Date: [_____]

As the designated representative of the Department for Grant Agreement number [_____] entered into between Grantee and the Department, I certify that the Grantee has submitted to the Department the following third party obligation executed, in writing, by the third party's authorized representative:

Vendor or Contractor: [_____]
Third Party Obligation Amount: [_____]

Vendor or Contractor: [_____]
Third Party Obligation Amount: [_____]

Vendor or Contractor: [_____]
Third Party Obligation Amount: [_____]

I certify that the State is issuing this Notice of Obligation to Reimburse Grantee for permissible purposes within the scope of the project description, subject to all the terms and conditions of the above referenced Grant Agreement.

Grant Amount (Minus AIPP if applicable): [_____]
The Amount of this Notice of Obligation: [_____]
The Total Amount of all Previously Issued Notices of Obligation: [_____]
The Total Amount of all Notices of Obligation to Date: [_____]
Note: Contract amounts may exceed the total grant amount, but the invoices paid by the grant will not exceed the grant amount.

Department Rep. Approver: [_____]
Title: [_____]
Signature: [_____]
Date: [_____]

1 Administrative and/or Indirect Cost – generally, the legislation authorizing the issuance of bonds prohibits the use of its proceeds for indirect expenses (e.g. penalty fees or damages other than pay for work performed, attorney fees, and administrative fees). Such use of bond proceeds shall not be allowed unless specifically authorized by statute.

NMDOT ATTACHMENT A

The City of Santa Fe shall agree to comply with the following Provisions:

1. Assume the lead role for the Project.
2. Be responsible for all applicable design, environmental and archaeological clearances, and right-of-way acquisition, in accordance with current local, state, federal laws, Uniform Relocation Act, and current design practices and specifications.
3. Be responsible for project development, project construction, construction management, and testing.
4. Utilize the Project Control Number in all correspondence and submittals to the Department.
5. Adopt a written resolution of support for the Project, including as applicable an assumption of ownership, liability, and maintenance responsibility for the scope, or related amenities and required funding to support the Project.
6. Complete the Project using current American Public Works Association (APWA) specifications, implemented Grantee's design standards and specifications, or Department specifications.
7. Use Rental Rate Blue Book rates, if not provided in the Department established equipment rates, in the implementation of this Project. Any equipment rates not found in the Department established rates shall be reimbursed at the Blue Book rates.

The City of Santa Fe shall agree to comply with the following Lighting and Signal Provisions as applicable:

1. After subject signal system(s) has/have been constructed, make provisions for and provide, at its own expense, all electrical energy, routine maintenance such as lamp replacement, emergency shutdown in case of accidental damage or equipment failure and make any repairs necessary due to accidental damage to, or equipment failure of, the signal head and poles.
2. In the event that accidental damage or equipment failure should occur, provide for equipment shut down/or emergency traffic control as needed. In addition, should the accidental damage or equipment failure involve the Controller (and cabinet) or the loop detection system, promptly notify the Traffic Technical Support Bureau of the Department.
3. In the event that the traffic signal should be rendered completely inoperable as a result of accidental damage, secure the intersection with stop signs at all approach legs until such time as the traffic signal is made operable.
4. Make ample future provisions in its budget each year for the cost of maintaining and providing energy to the traffic signals and telephone service to the signal system and intersection lighting.
5. At its own expense, maintain the signal controller and control equipment (the "Controller") including and maintenance of the machine vision vehicle detection system with cameras and emergency vehicle pre-empt system and repair or replace the Controller in the event the Controller and/or cabinet is damaged or there is an equipment failure.
6. After the installation of the roadway lighting system, if any, provide any and all utilities, maintenance, and such other items as may be necessary of continued satisfactory operation of said subject lighting system.
7. Make all timing adjustments to the Signal Control equipment and review the Signal System(s) for efficient and satisfactory operation.
8. Obtain approval from the Department for all signal equipment prior to installation.
9. Require the construction contractor to name the Department and the Grantee as an additional insured in the construction contractor's general liability policy.
10. Enter into a Signalization and Lighting Agreement with the Department's Traffic Technical Support Bureau as required.

INTERGOVERNMENTAL SERVICES AGREEMENT
BETWEEN CITY OF SANTA FE AND
NORTH CENTRAL NEW MEXICO ECONOMIC DEVELOPMENT DISTRICT
FOR FISCAL AGENT SERVICES

WHEREAS, the State of New Mexico appropriated funding for the purposes of improvements in the City of Santa Fe ("City") to the State of New Mexico, Department of Finance and Administration, Local Government Division, in the laws of Laws of 2021, Chapter 138, as detailed below ("Projects");

WHEREAS, NCNMEDD acknowledges that the appropriations for the Projects are intended for City;

WHEREAS, City, a municipality within Santa Fe County and the State of New Mexico, agrees to engage North Central New Mexico Economic Development District ("NCNMEDD") in providing fiscal agency services in relation to the Projects.

NOW, THEREFORE, the parties do mutually agree as follows:

This Agreement is entered into by and between City and NCNMEDD pursuant to the following purposes, conditions, and terms:

A. PURPOSE

The purpose of this Agreement is for NCNMEDD to provide fiscal agent services in connection with the Projects as specifically appropriated under New Mexico Legislative Appropriation Agreements identified as follows:

ApprID	Leg. Session	Appropriation Title	Year	Ch	Sect	Agency		Amount	Project Description
F2900	2021	SANTA FE PARKS UPGRADE	2021	138	29/341	341	Finance & Administration	1,000,000	to plan, design, construct, repair, improve and equip parks in Santa Fe in Santa Fe county;
F2902	2021	SANTA FE TIERRA CONTENTA TRAIL CONSTRUCT	2021	138	29/343	341	Finance & Administration	300,000	to plan, design and construct a trail in the Tierra Contenta subdivision in Santa Fe in Santa Fe county;
F2903	2021	SANTA FE MIDTOWN INFRA DES CONSTRUCT	2021	138	29/344	341	Finance & Administration	1,000,000	to plan, design, construct and improve infrastructure for the midtown Santa Fe property in Santa Fe in Santa Fe county;
F2899	2021	SANTA FE HOMEBOUND MEALS PROGRAM IMPROVE	2021	138	29/340	341	Finance & Administration	250,000	to plan, design, renovate, construct, improve and equip a facility for a meals program serving homebound and special needs individuals in Santa Fe in Santa Fe county;
F2901	2021	SANTA FE SOUTHSIDE TEEN CTR CONSTRUCT	2021	138	29/342	341	Finance & Administration	1,805,000	to plan, design, construct, furnish and equip a teen and resource center on the south side of Santa Fe in Santa Fe county;

Other projects may be included as agreed upon in writing and by amendment between the Parties.

B. SCOPE OF WORK

NCNMEDD's services in support of the above purpose shall be to provide fiscal agency services associated with the Projects, including:

1. NCNMEDD Fiscal Agency Services:

- Ensure that grant funds are expended in compliance with all applicable laws, regulations, and grant agreement and the transactions are appropriately accounted for in compliance with such laws, regulations, and grant agreement;
- Ensure safeguarding of grant funds and assets acquired with grant funds and proper accounting thereof in compliance with applicable laws, regulations, and grant agreement;
- Act as liaison between City and appropriate New Mexico state agencies as needed;
- Complete all required quarterly and financial reporting with information provided by City;
- Review and sign-off on project invoices to the appropriate State agency in a timely manner; and

- Work with the State on providing direct project reimbursements to City and act as a facilitator for such reimbursements as needed.

2. City Role and Responsibilities
   - City understands it remains ultimately responsible for executing and complying with all applicable laws, regulations, and grant agreement requirements such as flow down provisions, executing procurement responsibilities, and subcontractor management, as well as project, grant, and financial management.

C. TIMEFRAME

Work pursuant to this Agreement shall be effective no sooner than the date of last party signature below, and shall conclude upon notice by either party pursuant to paragraph I, but no later than one month following the reversion date of the appropriations, except as amended and mutually agreed upon in writing.

D. COMPENSATION:

NCNMEDD has agreed to provide the agreed upon services at three percent (3%) of the dollar amount(s) the City expends during the term of this Agreement towards the completion of the Projects, as those amounts were appropriated. Billing for services to City shall occur by NCNMEDD no more than on a monthly basis. The City will not use funds from this grant to make such payments.

E. RECORDS AND RECOVERY:

NCNMEDD shall maintain appropriate records of services rendered during the Agreement term and retain them for a period of three (3) years after the grant has been closed.

F. ACCESS TO INFORMATION

City and its contractors and subcontractors shall provide information, as needed, for purposes and work described in this Agreement. NCNMEDD will be included and copied on all invoices and reports, prior to City's submission to the appropriate State agency.

G. OWNERSHIP OF PROJECTS

All documents, capital improvements, and project assets produced pursuant to this Agreement shall be the property of City which shall assume full administrative responsibility for the life of the project; or the State grant agreement required period, whichever comes first.

H. LIMITATION OF LIABILITY

This Agreement shall not create a general liability of the constituent members of NCNMEDD.

City shall hold NCNMEDD harmless with respect to any damages, expenses, or claims arising or in connection with any negligent acts, errors, or omissions performed by City under this Agreement. This term shall not limit NCNMEDD liability with respect to NCNMEDD's negligence or willful misconduct.

I. MODIFICATION AND TERMINATION

Any modifications or amendments to this Agreement shall be in writing, and when signed by both parties shall be made part of the Agreement. This Agreement may be terminated by either party upon thirty (30) days written notice to the other.

J. CERTIFICATION

City shall comply with the requirements of all applicable laws, rules, and regulations, and shall assume full responsibility for payment of federal, state, and local taxes and contributions imposed or required under Social Security, Workers Compensation and income tax laws. City is required to follow all State procurement regulations and it is City obligation and responsibility to follow all State requirements as certified in the project bond questionnaire process and as included in associated State grant agreements, including reporting and drawdown requirements, such documents to be filed for each project in conjunction with this agreement.

K. ADEQUATE APPROPRIATIONS

Performance of this agreement is contingent upon sufficient appropriations and authorization being made for the performance of this Agreement. If sufficient appropriations and authorization are not made, this Agreement shall terminate immediately upon written notice being given by NCNMEDD to City. NCNMEDD's decision as to whether sufficient appropriations are available shall be accepted by City and shall be final. If NCNMEDD proposes an amendment to the Agreement to unilaterally reduce its Fiscal Agency Services, City shall have the option to terminate the Agreement or agree to negotiate for reduced Fiscal Agency Services: within thirty (30) days of receipt of the proposed amendment.

L. PENALTIES

The Procurement Code, NMSA 1978, Sections 13-1-28 to -199, imposes civil and criminal penalties for its violation. In addition, the New Mexico criminal statutes impose felony penalties for illegal bribes, gratuities, and kickbacks.

M. NOTICES

Any notice required to be given to either party by this Agreement shall be in writing

and shall be delivered in person, by courier service or by U.S. mail, either first class or certified, return receipt requested, postage prepaid as follows:

To: City
City Manager John Blair
City of Santa Fe
200 Lincoln
Santa Fe, New Mexico, 87501j

To NCNMEDD:
Monica Abeita Executive Director NCNMEDD
3900 Paseo del Sol
Santa Fe, NM 87507

N. DISPUTE RESOLUTION

The parties to this agreement agree that in the event of a dispute that may arise hereunder, which dispute cannot be reasonably resolve, they will submit to mediation by a neutral mediator, the cost of which will be borne equally by both parties. Disputes that cannot be resolved by mediation shall be subject to the laws of the State of New Mexico under the jurisdiction of the First Judicial District Court.

O. BREACH AND DEFAULT

If either party commits a breach or default in the performance or observance of any of its obligations under this agreement and such breach or default continues and is not corrected within thirty (30) days of written notification of such breach or default by either party to the other, the non-breaching or non-defaulting party shall have the right to terminate this agreement by giving notice to the breaching or defaulting party.

P. ASSIGNMENT

No portion of this agreement may be assigned to another party without the express written consent of the City and NCNMEDD.

APPROVED THIS 19th DAY OF December, 2023, BY CITY.

NORTH CENTRAL NEW MEXICO ECONOMIC DEVELOPMENT DISTRICT:

BY: Monica Abeita 12/8/23

Monica Abeita, Executive Director Date

IN WITNESS WHEREOF, the City of Santa Fe has agreed to this Waiver as of the date of the signature by the required approval authorities below.

CITY OF SANTA FE:

ALAN WEBBER, MAYOR

DATE: Dec 19, 2023

ATTEST:

Geralyn Cardenas (Dec 19, 2023 14:06 MST)

GERALYN CARDENAS, INTERIM CITY CLERK XIV

GB MTG 12/13/23

CITY ATTORNEY'S OFFICE:

Erin McSherry

Erin McSherry (Dec 8, 2023 13:36 MST)

ERIN MCSHERRY, CITY ATTORNEY

Munis Contract#_____
Original Contract Item#___23-0688____
SWPA/GSA/Coop/RFP/ITB #: _____

CITY OF SANTA FE
AMENDMENT No. 1 TO
Intergovernmental Service Agreement
ITEM#23-0688

This AMENDMENT No 1 (the "Amendment") amends the INTERGOVERNMENTAL SERVICES AGREEMENT BETWEEN CITY OF SANTA FE AND NORTH CENTRAL NEW MEXICO ECONOMIC DEVELOPMENT DISTRICT FOR FISCAL AGENT SERVICES, dated December 19, 2023 (the "Agreement"), between the City of Santa Fe (the "City") and the North Central New Mexico Economic Development District (NCNMEDD). The date of this Amendment shall be the date when it is executed by the City and the NCNMEDD whichever occurs last.

RECITALS:

A. Under the terms of the Agreement, the NCNMEDD has agreed to provide fiscal agent services in connection with the Capital Projects specified under the Agreement.

B. Pursuant to Article I of the Agreement, and for good and valuable consideration, the receipt and sufficiency of which are acknowledged by the parties, the City and the NCNMEDD agree as follows:

1. PURPOSE:

Article A of the Agreement is amended to add an additional twenty-two (22) Capital appropriations as seen on Exhibit A.

2. COMPENSATION:

Article D, of the Agreement is amended in its entirety as follows:

NCNMEDD has agreed to provide the agreed upon services at one percent (1%) of the dollar amount(s) the City expends during the term of this Agreement towards the completion of the Projects, as those amounts were appropriated. Billing for services to City shall occur by NCNMEDD no more than on a monthly basis. The City will not use funds from these Capital appropriations to make such payments.

3. CONTRACT IN FULL FORCE.

Except as specifically provided in this Amendment, the Agreement remains and shall remain in full force and effect, in accordance with its terms.

IN WITNESS WHEREOF, the parties have executed this Amendment No.1 to the Agreement as of the dates set forth below.

CITY OF SANTA FE:

Alan Webber (Mar 14, 2024 10:01 MDT)

ALAN WEBBER, MAYOR

DATE: Mar 14, 2024

NCNMEDD

Monica Abeita

MONICA ABEITA
EXECUTIVE DIRECTOR

Executive Director
TITLE

DATE: Feb. 20. 2024

ATTEST:

Geralyn Cardenas (Mar 14, 2024 11:32 MDT)

GERALYN CARDENAS, INTERIM CITY CLERK

GB MTG 03/13/2024 XIV

CITY ATTORNEY'S OFFICE:

Marcos Martinez
Marcos Martinez (Feb 16, 2024 13:08 MST)

SENIOR ASSISTANT CITY ATTORNEY

EXHIBIT A

Approp ID	Leg. Session	Appropriation Title	Approp. Amount	Reversion Date	Agency	Bond Series
22-G2419	2022	Jemez Road Construction	$ 400,000	6/30/2026	NMED	STB23SC
22-G3010	2022	SF Fire Fleet Equip / Upgrade Improv	$ 120,000	6/30/2026	DFA	STB23SC
22-G3012	2022	Harrison Rd Improve Construct	$ 100,000	6/30/2026	DFA	STB23SC
22-G3016	2022	Homebound Meals Program Improve	$ 200,000	6/30/2026	DFA	STB23SC
22-G3017	2022	Midtown Property Infra Improve	$ 1,100,000	6/30/2026	DFA	STB23SC
22-G3018	2022	SWAN Park Phase 2 Construct	$ 380,000	6/30/2026	DFA	STB23SC
22-G3019	2022	Tierra Contenta Trail Improve	$ 300,000	6/30/2026	DFA	STB23SC
22-G3165	2022	Median Beautify Phase 1 Design	$ 1,170,000	6/30/2026	DOT	STB23SC
22-G3169	2022	Governor Miles Rd. Construct	$ 300,000	6/30/2026	DOT	STB23SC
22-G3170	2022	Pacheco Street Improve	$ 150,000	6/30/2026	DOT	STB23SC
G22-5353	2022	Mary Esther Gonzales Senior Ctr- Equip	$ 235,630	6/30/2026	ALTSD	STB22SC- GO Bonds
G22-5354	2022	Pasatiemo Senior Ctr- Equip	$ 65,805	6/30/2026	ALTSD	STB22SC- GO Bonds
23-H3200	2023	Santa Fe Building Upgrade	$ 210,000	6/30/2027	DFA	General Fund
23-H3201	2023	SF Fire Station #2 Construction	$ 3,995,000	6/30/2027	DFA	General Fund
23-H3202	2023	SF Homebound Meals Faculty Ren	$ 200,000	6/30/2027	DFA	General Fund
23-H3203	2023	SF Midtown Infa. Improvement	$ 4,900,000	6/30/2027	DFA	General Fund
23-H3204	2023	SF Muni Rec Sports Cmplx Field Const.	$ 50,000	6/30/2027	DFA	General Fund
23-H3205	2023	SF Pickleball Cmplx Ft. Marcy Constr.	$ 650,000	6/30/2027	DFA	General Fund
23-H3206	2023	SF SWAN Park Phase 2 Improvement	$ 2,400,000	6/30/2027	DFA	General Fund
23-H3207	2023	SF Water History Park Improvement	$ 350,000	6/30/2027	DFA	General Fund
23-H3359	2023	Governor Miles Road Improvement	$ 210,000	6/30/2027	DOT	General Fund
23-H3360	2023	Pacheco Street Improvement	$ 350,000	6/30/2027	DOT	General Fund

Munis Contract#_____
Original Contract Item#___23-0688_____
SWPA/GSA/Coop/RFP/ITB #: _____

CITY OF SANTA FE
AMENDMENT No. 2 TO
Intergovernmental Service Agreement
ITEM#23-0688

This AMENDMENT No 2 (the "Amendment") amends the INTERGOVERNMENTAL SERVICES AGREEMENT BETWEEN CITY OF SANTA FE AND NORTH CENTRAL NEW MEXICO ECONOMIC DEVELOPMENT DISTRICT FOR FISCAL AGENT SERVICES, dated December 19, 2023 (the "Agreement"), between the City of Santa Fe (the "City") and the North Central New Mexico Economic Development District (NCNMEDD). The date of this Amendment shall be the date when it is executed by the City and the NCNMEDD whichever occurs last.

RECITALS:

A. Under the terms of the Agreement, the NCNMEDD has agreed to provide fiscal agent services in connection with the Capital Projects specified under the Agreement.

B. Pursuant to Article I of the Agreement, and for good and valuable consideration, the receipt and sufficiency of which are acknowledged by the parties, the City and the NCNMEDD agree as follows:

1. PURPOSE:

Article A of the Agreement is amended to add an additional three (3) capital appropriations as seen on Exhibit B.

2. CONTRACT IN FULL FORCE.

Except as specifically provided in this Amendment, the Agreement remains and shall remain in full force and effect, in accordance with its terms.

IN WITNESS WHEREOF, the parties have executed this Amendment No.2 to the Agreement as of the dates set forth below.

CITY OF SANTA FE:

Alan Webber (Apr 11, 2024 21:17 MDT)

ALAN WEBBER, MAYOR

DATE: Apr 11, 2024

CONTRACTOR:
NCNMEDD

Monica Abeita

MONICA ABEITA
EXECUTIVE DIRECTOR

Executive Director
TITLE

April 2, 2024

DATE:

ATTEST:

GERALYN CARDENAS (Apr 12, 2024 09:03 MDT)

GERALYN CARDENAS, INTERIM CITY CLERK

GB MTG 04/10/2024 XIV

CITY ATTORNEY'S OFFICE:

Marcos Martinez
Marcos Martinez (Apr 4, 2024 09:38 MDT)

SENIOR ASSISTANT CITY ATTORNEY

APPROVED FOR FINANCES:

Emily K. Oster

FINANCE DIRECTOR

EXHIBIT B

23-ZH9298	for Santa Fe to purchase security cameras and security systems at municipal parks	$	95,000.00
23-ZH9300	to purchase equipment and to provide arson investigation training to fire department three in Santa Fe	$	125,000.00
23-ZH9401	for sanitization and deep cleaning of all municipal swimming pools in Santa Fe	$	75,000.00

Original Contract Item# 23-0688
SWPA/GSA/Coop/RFP/ITB #: N/A

CITY OF SANTA FE
AMENDMENT No. 3 TO
Intergovernmental Service Agreement
ITEM#23-0688

This AMENDMENT No 3 (the "Amendment") amends the INTERGOVERNMENTAL SERVICES AGREEMENT BETWEEN CITY OF SANTA FE AND NORTH CENTRAL NEW MEXICO ECONOMIC DEVELOPMENT DISTRICT FOR FISCAL AGENT SERVICES, dated December 19, 2023 (the "Agreement"), between the City of Santa Fe (the "City") and the North Central New Mexico Economic Development District (NCNMEDD). The date of this Amendment shall be the date when it is executed by the City and the NCNMEDD whichever occurs last.

RECITALS:

A. Under the terms of the Agreement, the NCNMEDD has agreed to provide fiscal agent services in connection with the Capital Projects specified under the Agreement.

B. Pursuant to Article I of the Agreement, and for good and valuable consideration, the receipt and sufficiency of which are acknowledged by the parties, the City and the NCNMEDD agree as follows:

1. PURPOSE:

Article A of the Agreement is amended to add twenty-two (22) capital appropriations as seen on Exhibit A.

2. CONTRACT IN FULL FORCE.

Except as specifically provided in this Amendment, the Agreement remains and shall remain in full force and effect, in accordance with its terms.

IN WITNESS WHEREOF, the parties have executed this Amendment No.3 to the Agreement as of the dates set forth below.

CITY OF SANTA FE:

Alan Webber (Nov 15, 2024 09:56 MST)

ALAN WEBBER, MAYOR

DATE: Nov 15, 2024

CONTRACTOR:
NCNMEDD

Monica Abeita
Monica Abeita (Oct 11, 2024 13:22 MDT)

MONICA ABEITA
EXECUTIVE DIRECTOR

DATE: Oct 11, 2024

ATTEST:

Andrea Salazar
Andrea Salazar (Nov 15, 2024 11:02 MST)

ANDREA SALAZAR, CITY CLERK

CITY ATTORNEY'S OFFICE:

Marcos Martinez
Marcos Martinez (Oct 11, 2024 13:26 MDT)

SENIOR ASSISTANT CITY ATTORNEY

APPROVED FOR FINANCES:

Emily K. Oster

FINANCE DIRECTOR

EXHIBIT A

Approp ID	Leg. Session	Appropriation Title	Approp. Amount	Reversion Date	Funding Agency	Funding Source
I2455	2024	Paseo Real Wastewater Facility	$1,600,000	30-Jun-28	NMED	General Fund
I2457	2024	Jemez Rd Sewer	$210,000	30-Jun-28	NMED	General Fund
I2458	2024	Vereda de Velencia WWater	$160,000	30-Jun-2028	NMED	General Fund
I3023	2024	Police Dept. Equipment Purchase	$250,000	30-Jun-2026	DFA	General Fund
I3134	2024	Fire Stn 2 Construct	$250,000	30-Jun-2028	DFA	General Fund
I3136	2024	Soccer Valley MRC Construct	$3,425,000	30-Jun-2028	DFA	General Fund
I3138	2024	Los Prados Park	$438,000	30-Jun-2028	DFA	General Fund
I3141	2024	Fire SCBA Equip Purchase	$250,000	30-Jun-2026	DFA	General Fund
I3142	2024	Ft Marcy Park Ren	$5,000,000	30-Jun-2028	DFA	General Fund
I3143	2024	Permanent and Transitional Housing	$400,000	30-Jun-2028	DFA	General Fund
I3144	2024	Railyard Bldg. Upgrade	$100,000	30-Jun-2028	DFA	General Fund
I3145	2024	Railyard Multipurpose Bldg	$175,000	30-Jun-2028	DFA	General Fund
I3146	2024	Regional Airport Phase 2 Improve	$2,000,000	30-Jun-2028	DFA	General Fund
I3147	2024	River Park Pedestrian Bridge	$240,000	30-Jun-2028	DFA	General Fund
I3318	2024	NM599-Airport Access Road	$4,500,000	30-Jun-2028	NMDOT	General Fund
I3319	2024	Rufina St. & Lopez Lane Intersection	$50,000	30-Jun-2028	NMDOT	General Fund
I3320	2024	Paseo del Sol Extension	$50,000	30-Jun-2028	NMDOT	General Fund
I3321	2024	St. Michael's Rail Trail Underpass	$100,000	30-Jun-2028	NMDOT	General Fund
I4219	2024	El Museo Improvements	$126,950	30-Jun-2026	DFA	Severance Tax Bond
I4220	2024	Homebound Meals	$100,000	30-Jun-2028	DFA	General Fund
I4221	2024	Municipal Court Renovations	$29,843	30-Jun-2028	DFA	General Fund
I4222	2024	Supportive Housing	$844,470	30-Jun-2026	DFA	General Fund

FIR No. 10630.1

FISCAL IMPACT REPORT

General Information:

(Check) **Bill:** _____ **Resolution:** X

Short Title(s): Authorized Representatives and Agents for DFA Appropriation ID number I3321 NMDOT Control Number C5243321

Sponsor(s): Councilor Amanda Chavez

Reviewing Department(s): Public Works Department, Finance Department

Staff Completing FIR: Regina Wheeler, Public Works Director **Date:** 12/05/2024

Phone: (505) 955-6622

Reviewed by City Attorney: _____ **Date:** Jan 9, 2025

Reviewed by Finance Director: Emily K. Oster **Date:** Jan 9, 2025

Summary:
This Resolution designates authorized representatives and agents for New Mexico Department of Finance and Administration (DFA) appropriation ID Number I3321, New Mexico Department of Transportation (NMDOT) Control Number C5243321 ("Grant Agreement"). The Grant Agreement makes available one hundred thousand dollars ($100,000), appropriated by the New Mexico Legislature for a project to acquire rights of way for and the plan, design, and construction of a pedestrian underpass on Saint Michael's Drive, a New Mexico Rail Runner Express railroad crossing, and a Santa Fe Rail Trail Crossing.

Departments Affected:
Public Works Department.

Consequences of Not Enacting Legislation:
If this legislation is not adopted, the City will not satisfy Article X. B. (v) of the Grant Agreement, which requires the Governing Body adopt a resolution authorizing the person identified as the official representative of the City to sign the Grant Agreement and to sign Requests for Payment. Additionally, without the adoption of this Resolution the City would not receive NMDOT's funding from the Transportation Fund Grant Agreement in the amount of $100,000.

Conflict, Duplication, Companionship, or Relationship to Other Legislation:
The Governing Body will separately be approving the agreement through a later action.

Performance and Administrative Implications:
The plan, design, and construction of the project in association with this Grant Agreement will be undertaken by the Public Works Department and the grant will be administered with support from the Public Works Department staff.

Fiscal Implications:
** Amendment No. 1 to the Intergovernmental Agreement states that "NCNMEDD has agreed to provide the agreed upon services at one percent (1%) of the dollar amount(s) the City expends during the term of this Agreement towards the completion of the Projects." If the total agreement amount of one hundred thousand dollars ($100,000) is expended, then NCNMEDD will receive one thousand dollars ($1,000) as one percent (1%) of the dollar amount the City expends for the Project. The Governing Body will be approving the agreement through a separate action.

Fiscal Impact

X Check here if no fiscal impact

Expenditures

Expenditure Type	FYE 2025	FYE 2026	FYE 2027	Require BAR (Y/N)	Recurring (R) or Non-recurring (NR)	Fund	3-Year Total Cost
Personnel and Benefits*	$	$	$				
Capital Outlay	$	$	$				
Contractual/ Professional Services	$	$	$				
Operating	$	$	$				$
Total:	$	$	$				$

Expenditure Narrative:
**** See Fiscal Implications Section Above.**

Revenue

Revenue Type	FYE 2025	FYE 2026	FYE 2027	Recurring (R) or Non-recurring (NR)	Fund
General Fund	$	$	$		
Special Revenue	$	$	$		
CIP	$	$	$		
Enterprise	$	$	$		
Internal Service	$	$	$		
Trust and Agency	$	$	$		
Federal	$	$	$		
Other	$	$	$		
Total	$	$	$		

Revenue Narrative:

Signature:

Email: rawheeler@santafenm.gov

CITY OF SANTA FE, NEW MEXICO
CO-SPONSOR(S) TO /RESOLUTION NO. 2025-___
C5243321 St. Michaels Rail Trail Underpass

The following members of the Governing Body joined sponsorship of this legislation:

Michael Garcia, Councilor

1/15/2025
Date

10630.1

CITY OF SANTA FE

Memorandum

Date: December 19, 2024

To: Governing Body

From: Jason Sharp, Santa Fe Parks Superintendent JS

Via: Melissa McDonald, Parks and Open Spaces Division Director MMv
Regina Wheeler, Public Works Department Director RW

RE: New Mexico Department of Transportation Que Linda Beautification Program Grant Agreement

---

EXECUTIVE SUMMARY:

The Resolution accepts a Grant Agreement, administered by the New Mexico Department of Transportation ("NMDOT"), under the Que Linda Beautification Program, to control and remove litter from the roads and highways in Santa Fe. The grant amount is ninety-five thousand dollars ($95,000). All allocated funds must be spent by June 30, 2025.

BACKGROUND:

The purpose of the Que Linda Beautification Program is to control litter throughout New Mexico, under the authority delegated to the NMDOT by the "Clean Highways Act", NMSA 1978, Sections 67-15-1 to -4.

The State has issued this grant to begin the implementation of a program, which is expected to be ongoing, to reduce litter and beautify Santa Fe. The scope of work funded by this foundational grant includes development and implementation of community outreach, partnerships with local nonprofits, beautification of one gateway median, volunteer and tracking software implementation, and program management by existing staff.

ATTACHMENTS:

Resolution
FIR

CITY OF SANTA FE, NEW MEXICO

RESOLUTION NO. 2025-__

INTRODUCED BY:

Mayor Alan Webber

A RESOLUTION

ACCEPTING A GRANT FROM THE QUE LINDA BEAUTIFICATION PROGRAM ADMINISTERED BY THE NEW MEXICO DEPARTMENT OF TRANSPORTATION; ENTERING INTO A GRANT AGREEMENT FOR A TOTAL AMOUNT OF $95,000.00, TERM ENDING JUNE 30, 2025; IDENTIFYING THE CITY MANAGER OR CITY MANAGER'S DESIGNEE AS THE SIGNATORY FOR THE AGREEMENT.

WHEREAS, the City of Santa Fe ("City") and the New Mexico Department of Transportation ("NMDOT") wish to enter a grant agreement ("Agreement"), in the total amount of $95,000.00, term ending June 30, 2025, under the "Que Linda Beautification Program" ("Program"), attached and incorporated as Exhibit A, the purpose of which is to control and remove litter from the roads and highways in Santa Fe; and

WHEREAS, the NMDOT and City estimate the cost of the portion of the Program described in the "Scope of Work and Project Budget" described in Appendix A to the Agreement will be ninety-five thousand dollars ($95,000); and

WHEREAS, costs that exceed the ninety-five thousand dollars ($95,000) are not covered

in the Agreement; and

WHEREAS, the purpose of the Agreement is to partially fund "a permanent and continuous program to control and remove litter from the roads and highways of New Mexico to the maximum extent possible"; and

WHEREAS, Section 2 of the Agreement states that funds can be distributed only after the NMDOT has received the Agreement fully executed with a Resolution of Sponsorship.

NOW, THEREFORE, BE IT RESOLVED BY THE GOVERNING BODY OF THE CITY OF SANTA FE that the Agreement, for a total amount of $95,000, and with a term ending June 30, 2025, included as Exhibit A, is hereby approved.

BE IT FURTHER RESOLVED that the City Manager or the City Manager's designee is authorized to sign the agreement.

BE IT FURTHER RESOLVED that all allocated finds must be spent by June 30, 2025, and the City incorporates all the agreements, covenants, and understandings between the parties hereto concerning the subject matter hereof, and all such covenants, agreements and understandings have been merged into the written agreement.

BE IT FURTHER RESOLVED that the City is responsible for the Agreement; assumes the lead role in execution of the Agreement; agrees to the terms, conditions, and certification and reporting requirements of the Agreement; and assumes ownership, liability, and maintenance responsibilities for all amenities related to the completion of the work described in the Agreement.

PASSED, APPROVED, and ADOPTED this _____day of _____, 2025.

_____

ALAN WEBBER, MAYOR

ATTEST:

_____

ANDRÉA SALAZAR, CITY CLERK

APPROVED AS TO FORM:

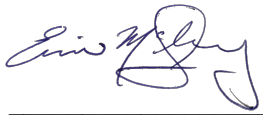

_____

ERIN K. McSHERRY, CITY ATTORNEY

Legislation/2025/Resolutions/NMDOT Que Linda Grant Agreement

Exhibit A

Contract Number: _____
Vendor No.:_____
Project No.: _____
Control No: _____

NEW MEXCIO DEPARTMENT OF TRANSPORTATION
QUE LINDA BEAUTIFICATION PROGRAM
GRANT AGREEMENT

This Agreement is between the New Mexico Department of Transportation (Department) and City of Santa Fe (Grantee), collectively referred to as the "Parties." This Agreement is effective as of the date of the last party to sign it on the signature page below.

RECITALS

WHEREAS, the purpose of the Que Linda Beautification Program (Program) is to accomplish litter control throughout New Mexico, under the authority delegated to the Department by the "Clean Highways Act," NMSA 1978, Section 67-15-1 to -4 (Act) to conduct a permanent and continuous program to control and remove litter from the roads and highways of New Mexico to the maximum extent possible;

WHEREAS, the Department was appropriated funding through the General Appropriation Act, Laws 2024, Chapter 64, Section 11, for roadway beautification and litter control, of which a portion is being used for the purposes of carrying out the provisions of the Act; and

WHEREAS, the Act provides that the Department may enter into agreements and provide a Program for the purposes of carrying out the provisions of the Act.

AGREEMENT

Now, therefore, the Parties agree as follows:

1. Program Funding.

a. The Department hereby awards $95,000 to partially fund the Budget (Appendix A) with the purpose of conducting a permanent and continuous program to control and remove litter from the roads and highways of New Mexico to the maximum extent possible.
b. The Grantee is responsible for all costs that exceed Program funding.
c. All allocated funds must be spent by June 30, 2025.
d. All allocated funds are eligible to be reallocated pursant to Section 20.
e. The Grantee must repay Program funding to the Department if:
    1. The Program is cancelled or partially performed.
    2. A final audit conducted by the Department determines the following:
        i. an overpayment,
        ii. unexpended funds, or
        iii. ineligibile expenses.

2. The Department:

a. Shall distribute the funds, identified in Section 1(a), in a lump sum to the Grantee after:

1. The Department has received this Agreement fully executed with a Resolution of Sponsorship (Appendix C).

b. May perform Program monitoring that might consist of the following:

1. Conduct a review of the Grantee's performance and administration of the Program funds identified in Section 1(a).

2. Conduct a review of subcontracts for administration of the Program funds.

3. The Grantee Shall:

a. Perform and participate in the Program by accomplishing the following:

1. Participating in 2 technical assistance meetings with the Que Linda Director for the development of a local beautification program plan;

2. Creating and adopting a formal local beautification program plan;

3. Hosting a minimum of 3 events in alignment with the 11 strategies of the Que Linda Program (Appendix B); and

4. Completing a minimum of 2 contracts in alignment with the 11 strategies of the Que Linda Program (Appendix B).

b. Procure and award any contract in accordance with applicable procurement law, rules, regulations and ordinances.

c. Adopt a written resolution of Program support that includes a commitment to funding, ownership, liability and maintenance. The resolution is attached to this Agreement as Appendix C.

d. Comply with any and all state, local and federal regulations including the Americans with Disabilities Act (ADA) and laws regarding noise ordinances, air quality, surface water quality, ground water quality, threatened and endangered species, hazardous materials, historic and cultural properties, and cultural resources.

e. Meet with the Department, as needed, or provide Program status reports within 30 days of request.

f. Acknowledge that the Department reserves the right to unilaterally adjust, modify, or cancel any and all funding identified in Section 1(a) in order to ensure the expenditure of all funds.

g. Agree and acknowledge Program funds shall not be used for purposes other than those outlined and specified in Appendix A.

h. Comply with Department mandatory reporting requirements:

1. The Grantee shall submit an annual report on the progress of activities during the funding period by June 15, 2025.

2. The Grantee must participate in a minimum of 75% of the Que Linda statewide cohort meetings.

i. Agree that Program funds must be expended on or before June 30, 2025.

4. Both Parties Agree:

a. The inability to properly complete and administer the Program may result in the Grantee being

denied future Program funding.
b. The Department will not pay for any expenses incurred prior to the Parties signing the Agreement, after termination of the Agreement, or in excess of the amount of the Program funding noted in Section 1(a).

5. Term.
This Agreement becomes effective upon signature of the Parties. The effective date is the date when the last party signed the Agreement on the signature page blow. This Agreement terminates at 11:59:59 p.m. on June 30, 2025, unless terminated earlier as provided under this Agreement.

6. Termination.
The Department may terminate this Agreement for any reason, by giving the Grantee 30 days written notice. On receipt of written notice from the Department, the Grantee shall suspend all Program activities unless otherwise directed by the Department in writing. The Parties acknowledge that termination will not nullify obligations incurred prior to the date of the written notice requiring termination. Neither Party has any obligations after termination, except as stated in Section 1(e) and 15.

7. Notices.
For a notice under this Agreement to be valid, it must be in writing; be delivered by hand, registered or certified mail return receipt requested and postage prepaid, fax or e-mail; and be addressed as follows:

To the Department:

Amy Whitfield, Special Director
New Mexico Department of Transportation
P.O. Box 1149
Santa Fe, NM 87504-1149
Phone: 505-309-1066
Email: Amy.Whitfield@dot.nm.gov

To the Grantee:

Randy Randall, Interim City Manager
200 Lincoln Ave
Santa Fe, NM 87501
Phone: 505-955-6848
Email: rrandall@santafenm.gov

8. Third Party Beneficiary.
It is not intended by any of the provisions of any part of this Agreement to create in the public or any member of the public a third party beneficiary or to authorize anyone not a party to the Agreement to maintain a suit(s) for wrongful death(s), bodily and/or personal injury(ies) to person(s), damage(s) to property(ies), and/or any other claim(s) whatsoever pursuant to the provisions of this Agreement.

9. New Mexico Tort Claims Act.
As between the Department and Public Entity, neither party shall be responsible for liability incurred as a

result of the other party's acts or omissions in connection with this Agreement. Any liability incurred in connection with this Agreement is subject to the immunities and limitations of the New Mexico Tort Claims Act, NMSA 1978, Section 41-4-1 to -27.

10. Scope of Agreement.
This Agreement constitutes the entire understanding between the Parties with respect to the subject matter of the Agreement and supersedes all other Agreements, whether written or oral, between the parties, except that this Agreement does not supersede the Grantee's rights under any other grant Agreement.

11. Terms of this Agreement.
The terms of this Agreement are lawful; performance of all duties and obligations must conform with and not contravene any state, local, or federal statutes, regulations, rules, or ordinances.

12. Legal Compliance.
The Grantee shall comply with all applicable federal, state, and local laws, regulations and Department policies in the performance of this Agreement, including, but not limited to laws governing civil right, equal opportunity compliance, environmental issue, workplace safety, employer-employee relations and all other laws governing operations of the workplace. The Grantee shall include the requirements of this Section 12 in each contract and subcontract at all tiers.

13. Equal Opportunity Compliance.
The Parties agree to abide by all federal and state laws and rules and regulations, and executive orders, pertaining to equal employment opportunity. In accordance with all such laws and rules and regulations, and executive orders, the parties agree to assure that no person in the United States will, on the grounds of race, color, national origin, ancestry, sex, sexual preference, age or handicap, be excluded from employment with, or participation in, any program or activity performed under this Agreement. If the parties are found to not be in compliance with these requirements during the term of this Agreement, the parties agree to take appropriate steps to correct these deficiencies.

14. Appropriations and Authorizations.
The terms of this Agreement are contingent upon sufficient appropriations and authorizations being made by the governing board of the Grantee, and the Legislature of New Mexico for performance of the Agreement. If sufficient appropriations and authorizations are not made by the Grantee and the Legislature, this Agreement will terminate upon written notice being given by one Party to the other. The Department and Grantee are expressly not committed to expenditure of any funds until such time as they are budgeted, encumbered, and approved for expenditure.

15. Accountability of Receipts and Disbursements.
There shall be strict accountability for all receipts and disbursements relating to this Agreement. The Grantee shall maintain all records and documents relating to the Program for a minimum of 5 years after completion. The Grantee shall furnish the Department and State Auditor, upon demand, any and all such records relevant to this Agreement. If an audit finding determines that specific funding was inappropriate or not related to the Program, the Grantee shall reimburse that portion to the Department within thirty (30)

days of written notification. If documentation is insufficient to support an audit by customarily accepted accounting practices, the expense supported by such insufficient documentation must be reimbursed to the Department within thirty (30) days.

16. Severability.
In the event that any portion of this Agreement is determined to be void, unconstitutional or otherwise unenforceable, the remainder of this Agreement will remain in full force and effect.

17. Applicable Law.
The laws of the State of New Mexico shall govern this Agreement, without giving effect to its choice of law provisions. Venue is proper in a New Mexico Court of competent jurisdiction in accordance with NMSA 1978, Section 38-3-1(G).

18. Amendment.
This Agreement may be amended by an instrument in writing executed by the Parties.

19. Reallocation of Funding.
The Grantee may request reallocation of the Program Funds from any Budget (Appendix A) item to other idenitifed Budget items. The Grantee must submit a written request with the proposed Budget detailing the reallocation amount and the identified Budget item(s) and costs of which funds are being reallocated. The Grantee shall be allowed to reallocate pursuant to the written request upon receipt of approval from the Department and executed Amendment by the Parties pursuant to Section 18.

The remainder of this page is intentionally left blank.

Each party is signing this Agreement on the date stated opposite that party's signature. This Agreement is effective as of the date of the last party to sign it on the signature page below.

NEW MEXICO DEPARTMENT OF TRANSPORTATION

By: _____ Date: _____
Cabinet Secretary or Designee

Approved as to form and legal sufficiency.

By: _____ Date: _____
Office of General Counsel

City of Santa Fe

By: _____ Date: _____
Randy Randall, Interim City Manager

Attest:

By: _____ Date: _____
Andréa Salazar, City Clerk

Approved as to form and legal sufficiency.

By: Kevin L. Nault Date: Dec 18, 2024
Kevin L. Nault (Dec 18, 2024 16:34 MST)
Kevin Nault, Assistant City Attorney

Finance Department:

By: _____ Date: _____
Emily Oster, Finance Director

Appendix A: Scope of Work and Project Budget

Scope of Work. The Grantee shall complete and oversee the following activities.

Activities. The Grantee shall complete and oversee the following Que Linda Grant related activities in support of the Program, as situated in the City of Santa Fe's Public Works Department, Parks and Open Space Division and under the oversight and in coordination with Department consultation. The Grantee is responsible for:

a. Contract organization to create curriculum for anti-litter campaign ;

b. Contract with local graphic firm to create promotional materials for anti-litter campaign;

c. Partner with local nonprofit to host cleanup events ;

d. Purchase and create platform for tracking and organizing volunteer cleanup events, and the reporting illegal trash dumping;

e. Fund local median beautification projects.

Project Budget 1

Phase 1 - Development			
	Federal Share	Grantee Match	Total
Task 1: Create Local Beautification Plan	$	$	$
Anti-Litter Education Campaign	Federal Share	Grantee Match	Total
Curriculum creation	$	$	$10,000.00
Illustrate booklet	$	$	$10,000.00
Printing and Marketing Supplies			$5,000.00
Outreach Supplies			$10,000.00
Task 2: Reporting Illegal Trash Dumping			
Purchase and Design software			$10,000.00
Task 3: Partnering with local non-profits for cleanup events			

Supplies			$5,000.00
Contract with non-profit			$10,000.00
Task 4			
Fund local median beautification project			$15,000.00
Task 5			
Supplement two existing employees' Salary to take on Program Coordinator duties or contract			$20,000.00
Total			**$95,000.00**

11 Strategies of Que Linda Statewide Beautification

Student Service Learning:

Leveraging local high school students provide three benefits: 1) creates a very affordable resource to help keep communities clean; 2) provides high school students with opportunities to engage in community service; 3) creates local ambassadors that spread anti-litter messaging.

Local high schools must incorporate service-learning requirements in certain courses. The requirements shall require a certain number of community service hours which can be met through participation in trash pickup and graffiti removal/prevention programs.

Litter Abatement Alternatives to Penalty Fines:

This program would serve as a resource for municipal and county court systems. For various reasons, residents are assessed penalties or court fees associated with a crime. In many instances, individuals cannot afford to pay the cost. As an alternative, the individual could be assigned to a local trash pickup and graffiti removal/prevention program.

Use of Corrections Contractors:

The New Mexico Corrections Department offers litter pickup, general landscaping and graffiti clean-up services. Cost for services range but are highly competitive. LBPs can leverage services for contract maintenance of their property.

County Inmate Litter Abatement Program:

Utilizing incarcerated individuals for trash pickup is a long-standing practice. Oftentimes county-run facilities are discouraged to establish this program because inmates are incarcerated for short periods. Nonetheless, an established program could put short-term inmates to work immediately. The County correctional facility would establish the program that utilizes inmates to perform trash pickup services. This program would provide the service to the LBP.

Elementary Anti-Litter Education Campaign:

The State of NM is rolling out a new anti-litter campaign. It can provide media to local elementary schools that incorporate anti-litter activities into their curriculum. Activities could include coloring contests, recording radio ads, writing letters to newspapers, campus clean up days, recycling programs, etc.

This program is integral to building ambassadors among the youth in the community who will have a positive influence within their families.

Business Corridor Adoption Program:

Engaging businesses in an effort to keep cities clean is longstanding. Typically businesses would adopt a corridor and become responsible for its upkeep. In this program, the business would simply provide a financial sponsorship. The sponsorship would go to the LBP who would utilize the resources for contract maintenance.

Reporting Illegal Trash Dumping Hotline:

Illegal dumping is a major issue in several communities. It's typically driven by limited options for legal dumping. When residents dump illegally, or lose trash because of an unsecured load, the trash often includes personal identifiable information. Local law enforcement agencies shall establish a hotline or online portal where this information could be anonymously obtained. Penalties for violators would need to be established in ordinance.

Secure Loads Establishment and Enforcement:

Unsecure loads is a major cause of messy roadways. Local governments must put an ordinance in place that establishes a penalty for driving with an unsecured load. In addition to this penalty, trash collection centers must impose a fee when a resident arrives with an unsecured load.

Establish Free Weekend Events at Collection Centers:

Affordability may be an issue for some residents. If trash authorities were to provide "Free Weekends" once a month, it would encourage residents to dump legally.

Neighbor Rates at Collection Centers:

Some communities and counties do not have adequate access to a collection center, therefore, an established "Neighbor Rate" at the closest facility will encourage residents to dump trash legally.

Community Trash Pick-up Events:

Some residents, for various reasons, are unable to take trash to a collection center on their own. This program would identify weekends, throughout the year, when trash authorities, together with volunteers, would pick up trash and deliver it to a collection center. Residents would need to signup for this service and provide a justification.

FIR No. 10642

FISCAL IMPACT REPORT

General Information:

(Check) **Bill:** _____ **Resolution:** X

Short Title(s): New Mexico Department of Transportation Que Linda Beautification Program Grant Agreement

Sponsor(s): Mayor Alan Webber

Reviewing Department(s): Public Works Department

Staff Completing FIR: Jason Sharp; Park Ranger Superintendent **Date:** 12/19/2024
Phone: (505) 955-2146

Reviewed by City Attorney: _____ **Date:** Jan 10, 2025

Reviewed by Finance Director: Emily K. Oster **Date:** Jan 10, 2025

Summary:
This Resolution accepts a Grant Agreement, administered by the New Mexico Department of Transportation ("NMDOT"), under the Que Linda Beautification Program ("Program"), to conduct a permanent and continuous program to control and remove litter from the roads and highways in Santa Fe. The grant amount is ninety-five thousand dollars ($95,000). All allocated funds must be spent by June 30, 2025.

Departments Affected:
Public Works Department

Consequences of Not Enacting Legislation:
If this legislation is not adopted, the City will not receive the Program Grant from NMDOT in the amount of ninety-five thousand dollars ($95,000). The City will also not complete the listed scope of work to control litter and enhance beautification.

Conflict, Duplication, Companionship, or Relationship to Other Legislation:
None.

Performance and Administrative Implications:
The Public Works Parks and Open Space Park Rangers will implement the work required by the grant. Administration of the grant will be performed by Public Works and Finance Departments.

Fiscal Implications:
The City would receive $95,000 to conduct the scope of work in the grant. The cost of scope of work is not expected to exceed the grant amount.

Fiscal Impact

_____ Check here if no fiscal impact

A

Expenditures

Expenditure Type	FYE 2025	FYE 2026	FYE 2027	Require BAR (Y/N)	Recurring (R) or Non-recurring (NR)	Fund	3-Year Total Cost
Personnel and Benefits*	$ 20,000	$	$	Y	NR	100	
Capital Outlay	$ 20,000	$	$		NR	100	
Contractual/ Professional Services	$ 10,000	$	$		NR	100	
Operating	$ 45,000	$	$		NR	100	$
Total:	$ 95,000	$	$				$

Expenditure Narrative:

Personnel benefits are to compensate Park Ranger staff for additional duties to manage this program. Capital expenditures are the beautification of a gateway median and purchase of software, contractual services are with non profits and other service providers to accomplish the work and operating are the various expense related to outreach and grant implementation. A BAR will be routed through Governing Body to budget these expenditures.

Revenue

Revenue Type	FYE 2025	FYE 2026	FYE 2027	Recurring (R) or Non-recurring (NR)	Fund
General Fund	$	$	$		
Special Revenue	$	$	$		
CIP	$	$	$		
Enterprise	$	$	$		
Internal Service	$	$	$		
Trust and Agency	$	$	$		
Federal	$	$	$		
Other	$ 95,000	$	$	NR	100
Total	$ 95,000	$	$		

Revenue Narrative:

The grant revenue will be recognized in fund 100 to fund program expenditures above.

Signature: Regina Wheeler
Regina Wheeler (Jan 10, 2025 15:03 MST)

Email: rawheeler@santafenm.gov

Signature: Melissa McDonald

Email: mamcdonald@santafenm.gov

Signature: Jason Sharp
Jason Sharp (Jan 10, 2025 15:08 MST)

Email: jtsharp@santafenm.gov

CITY OF SANTA FE

Memorandum

Date: December 13, 2024

To: Governing Body, Public Works and Utilities Committee, Finance Committee

From: Regina Wheeler, Public Works Department Director RW

RE: C5223165 Medians Phase I Designating Authorized Representatives and Agents

---

EXECUTIVE SUMMARY:

The Resolution designates authorized representatives and agents for New Mexico Department of Finance and Administration (DFA), Appropriation ID Number G3165, New Mexico Department of Transportation (NMDOT) Control Number C5223165 ("Grant Agreement"). The Grant Agreement makes available one million one hundred seventy thousand dollars ($1,170,000), to plan, design, construct, landscape, and make phase 1 improvements to medians on arterial and collector roads for the city of Santa Fe in Santa Fe County.

BACKGROUND:

The New Mexico Department of Transportation, through Article X. B. (v) of the Grant Agreement, requires that the City of Santa Fe as the grantee, to agree that the "governing body has duly adopted or passed as an official act a resolution, motion or similar action authorizing the person identified as the official representative of the Grantee to sign the Agreement and to sign Requests for Payment". Adoption of this Resolution will satisfy this requirement and allow the City to enter into the Grant Agreement. The Grant Agreement will be presented to the Governing Body for action separate from this Resolution; and this Resolution will not be implicated if the Governing Body does not later approve the grant agreement.

ATTACHMENTS:
Resolution
Fiscal Impact Report

CITY OF SANTA FE, NEW MEXICO

RESOLUTION NO. 2025-__

INTRODUCED BY:

Councilor Amanda Chavez

A RESOLUTION

AUTHORIZING REPRESENTATIVES AND AGENTS FOR NEW MEXICO DEPARTMENT OF FINANCE AND ADMINISTRATION, APPROPRIATION ID NUMBER G3165, NEW MEXICO DEPARTMENT OF TRANSPORTATION CONTROL NUMBER C5223165, TO PLAN, DESIGN, CONSTRUCT, LANDSCAPE, AND MAKE PHASE I IMPROVEMENTS TO MEDIANS ON ARTERIAL AND COLLECTOR ROADS FOR THE CITY OF SANTA FE IN SANTA FE COUNTY.

WHEREAS, in the Laws of 2022, Chapter 53, Section 36, Subsection 83, the New Mexico Legislature made an appropriation to the New Mexico Department of Transportation ("NMDOT"), for funds from which NMDOT is making available to the City of Santa Fe ("Grantee") through the New Mexico Department of Finance and Administration Appropriation Number G3165, NMDOT Control Number C5223165 ("Agreement"), incorporated as Attachment A, in the amount of one million, one hundred seventy thousand dollars ($1,170,000), to plan, design, construct, landscape, and make Phase 1 improvements to medians on arterial and collector roads for the city of Santa Fe in Santa Fe County; and

WHEREAS, the Governing Body adopted Resolution No. 2024-28, which identified Phase I of the Santa Fe Median Beautification project as number 20 on the Infrastructure and Capital Improvement plan for Fiscal Year 2026-2030; and

WHEREAS, Article X. B. (v) of the Agreement states that "the Grantee's governing body has duly adopted or passed as an official act a resolution, motion or similar action authorizing the person identified as the official representative of the Grantee to sign the Agreement and to sign Requests for Payment"; and

WHEREAS, in a letter dated August 24, 2023, the New Mexico Department of Finance and Administration ("DFA") took the position that it required the City to initiate a fiscal agent relationship in order for the City to utilize its current State Capital appropriations; and

WHEREAS, as a result of the DFA's position, the City entered into a governmental services agreement, incorporated as Attachment B, with North Central Economic Development District ("NCEDD") for fiscal agent services, in which NCEDD agreed to review and sign Requests for Payment for permissible expenditures, on December 19, 2023.

NOW, THEREFORE, BE IT RESOLVED BY THE GOVERNING BODY OF THE CITY OF SANTA FE that the following provisions shall apply to the Agreement:

A. The person listed below, or their successor, is the Grantee's official representative authorized to sign the Agreement:

Grantee:	City of Santa Fe
Name:	Alan Webber
Title:	Mayor
Address:	PO Box 909
	Santa Fe, NM 87504-0909
Email:	mayor@santafenm.gov
Telephone:	(505) 955-6590

B. The person listed below, or their successor, is the Grantee's Fiscal Officer of Fiscal Agent concerning reviewing and signing Requests for Payments for permissible expenditures:

Grantee:	City of Santa Fe
Name:	Felicity Fonseca
Title:	Community Development Director, North Central New Mexico Economic Development District
Address:	644 Don Gaspar Ave. Santa Fe, Nm 87505
Email:	felicityf@ncnmedd.com
Telephone:	(505) 356-9098

PASSED, APPROVED, and ADOPTED this _____day of _____, 2025.

_____

ALAN WEBBER, MAYOR

ATTEST:

_____

ANDRÉA SALAZAR, CITY CLERK

APPROVED AS TO FORM:

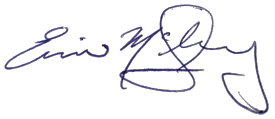

_____

ERIN K. McSHERRY, CITY ATTORNEY

DocuSign Envelope ID: D68910AB-CDC7-4A64-848A-D7DAE50D49A1

Attachment A

Contract Number: _____
Vendor Number: 0000054360
Control Number: C5223165

STATE OF NEW MEXICO
DEPARTMENT OF TRANSPORTATION
FUND 89200 CAPITAL APPROPRIATION PROJECT

THIS AGREEMENT is between the Department of Transportation, hereinafter called the "Department" or abbreviation such as "NMDOT", and City of Santa Fe, hereinafter called the "Grantee". This Agreement is effective as of the date of the last party to sign it on the signature page below.

RECITALS

WHEREAS, in the Laws of 2022, SB212, Chapter 53, Section 36, Subsection 83, the Legislature made an appropriation to the Department, funds from which the Department is making available to the Grantee pursuant to this Agreement; and

WHEREAS, the Department is granting to Grantee, and the Grantee is accepting the grant of, funds from this appropriation, in accordance with the terms and conditions of this Agreement; and

WHEREAS, pursuant to the NMSA 1978, Section 67-3-28, as amended, and State Highway Commission Policy No. 44, the Department has the authority to enter into this Grant Agreement.

AGREEMENT

NOW, THEREFORE, in consideration of the mutual covenants and obligations contained herein, the parties hereby mutually agree as follows:

ARTICLE I. PROJECT DESCRIPTION, AMOUNT OF GRANT AND REVERSION DATE

A. The project that is the subject of this Agreement is described as follows:

DFA Appropriation ID G3165 NMDOT Control Number C5223165 **$1,170,000**
APPROPRIATION REVERSION DATE: 6/30/2026
Laws of 2022, Chapter 53, Section 36, Subsection 83, One Million One Hundred Seventy Thousand Dollars and No Cents ($1,170,000), to plan, design, construct, landscape and make phase 1 improvements to medians on arterials and collector roads for Santa Fe in Santa Fe county .

The Grantee's total reimbursements shall not exceed One Million One Hundred Seventy Thousand Dollars and No Cents $1,170,000 (the "Appropriation Amount") minus the allocation for Art in Public Places ("AIPP

amount")[1], if applicable, Zero Dollars and No Cents ($ 0.00), which equals One Million One Hundred Seventy Thousand Dollars and No Cents (**$1,170,000**) (the "Adjusted Appropriation Amount").

In the event of a conflict among the Appropriation Amount, the Reversion Date, as defined herein and/or the purpose of the Project, as set forth in this Agreement, and the corresponding appropriation language in the laws cited above in this Article I(A), the language of the laws cited herein shall control.

This project is referred to throughout the remainder of this Agreement as the "Project"; the information contained in Article I(A) is referred to collectively throughout the remainder of this Agreement as the "Project Description." Optional Attachment A sets forth additional or more stringent requirements and conditions, which are incorporated by this reference as if set forth fully herein. If Optional Attachment A imposes more stringent requirements than any requirement set forth in this Agreement, the more stringent requirements of Attachment A shall prevail, in the event of irreconcilable conflict. The Grantee shall reference the Project's number in all correspondence with and submissions to the Department concerning the Project, including, but not limited to, Requests for Payment and reports.

ARTICLE II. LIMITATION ON DEPARTMENT'S OBLIGATION TO MAKE GRANT DISBURSEMENT TO GRANTEE

A. Upon the Effective Date of this Agreement, for permissible purposes within the scope of the Project Description, the Grantee shall only be reimbursed monies for which the Department has issued and the Grantee has received a Notice of Department's Obligation to Reimburse[2] Grantee (hereinafter referred to as "Notice of Obligation"). This Grant Agreement and the disbursement of any and all amounts of the above referenced Adjusted Appropriation Amount are expressly conditioned upon the following:

(i) Irrespective of any Notice of Obligation, the Grantee's expenditures shall be made on or before the Reversion Date and, if applicable, an Early Termination Date (i.e., the goods have been delivered and accepted or the title to the goods has been transferred to the Grantee and/or the services have been rendered for the Grantee); and

(ii) The total amount received by the Grantee shall not exceed the lesser of: (a) the Adjusted Appropriation Amount identified in Article I(A) herein or (b) the total of all amounts stated in the Notice(s) of Obligation evidencing that the Department has received and accepted the Grantee's Third Party Obligation(s), as defined in subparagraph iii of this Article II(A); and

(iii) The Grantee's expenditures were made pursuant to the State Procurement Code and execution of binding written obligations or purchase orders with third party contractors or vendors for the provision of services, including professional services, or the purchase of tangible personal property and real property for the Project, hereinafter referred to as "Third Party Obligations"; and

(iv) The Grantee's submittal of timely Requests for Payment in accordance with the procedures set forth in Article IX of this Agreement; and

(v) In the event that capital assets acquired with Project funds are to be sold, leased, or licensed to or operated by a private entity, the sale, lease, license, or operating agreement:

---

[1] The AIPP amount is "an amount of money equal to one percent or two hundred thousand dollars ($200,000), whichever is less, of the amount of money appropriated for new construction or any major renovation exceeding one hundred thousand dollars ($100,000)." Section 13-4A-4 NMSA 1978.

[2] "Reimburse" as used throughout this Agreement includes Department payments to the Grantee for invoices received, but not yet paid, by the Grantee from a third party contractor or vendor, if the invoices comply with the provisions of this Agreement and are a valid liability of the Grantee.

a. must be approved by the applicable oversight entity (if any) in accordance with law; or
b. if no oversight entity is required to approve the transaction, the Department must approve the transaction as complying with law.

Prior to the sale, lease, license, or operating agreement being approved pursuant to Articles II(A)(v)(a) and II(A)(v)(b) herein, the Department may, in its sole and absolute discretion and unless inconsistent with State Board of Finance imposed conditions, reimburse the Grantee for necessary expenditures incurred to develop the Project sufficiently to make the sale, lease, license, or operating agreement commercially feasible, such as plan and design expenditures; and

(vi) The Grantee's submission of documentation of all Third Party Obligations and amendments thereto (including terminations) to the Department and the Department's issuance and the Grantee's receiving of a Notice of Obligation for a particular amount in accordance with the terms of this Agreement shall be governed by the following:

a. The Grantee shall submit to the Department one copy of all Third Party Obligations and amendments thereto (including terminations) as soon as possible after execution by the Third Party **but prior to execution by the Grantee.**
b. Grantee acknowledges and agrees that if it chooses to enter into a Third Party Obligation prior to receiving a Notice of Obligation that covers the expenditure, it is solely responsible for such obligations.
c. The Department may, in its sole and absolute discretion, issue to Grantee a Notice of Obligation for the particular amount of that Third Party Obligation that only obligates the Department to reimburse Grantee's expenditures made on or before the Reversion Date or an Early Termination Date. The current Notice of Obligation form is attached to this Agreement as Exhibit 2.
d. The date the Department signs the Notice of Obligation is the date that the Department's Notice of Obligation is effective. After that date, the Grantee is authorized to budget the particular amount set forth in the Notice of Obligation, execute the Third Party Obligation and request the Third Party to begin work. Payment for any work performed or goods received prior to the effective date of the Notice of Obligation is wholly and solely the obligation of the Grantee.

B. The Grantee shall implement, in all respects, the Project. The Grantee shall provide all necessary qualified personnel, material, and facilities to implement the Project. The Grantee shall finance its share (if any) of the costs of the Project, including all Project overruns.

C. Project funds shall not be used for purposes other than those specified in the Project Description.

D. Unless specifically allowed by law, Project funds cannot be used to reimburse Grantee for indirect Project costs.

ARTICLE III. NOTICE PROVISIONS AND GRANTEE AND DEPARTMENT DESIGNATED REPRESENTATIVES

Whenever written notices, including written decisions, are to be given or received, related to this Agreement, the following provisions shall apply.

The Grantee designates the person(s) listed below, or their successor, as their official representative(s) concerning all matters related to this Agreement:

Grantee: City of Santa Fe
Name: David Chapman
Title: Grants Administrator
Address: P.O. Box 909, Santa Fe, New Mexico 87504
Email: dachapman@ci.santa-fe.nm.us
Telephone: 505-955-2012

The Grantee designates the person(s) listed below, or their successor, as their Fiscal Officer or Fiscal Agent concerning all matters related to this Agreement:

Grantee: _____
Name: _____
Title: _____
Address: _____
Email: _____
Telephone: _____

The Department designates the persons listed below, or their successors, as the Points of Contact for matters related to this Agreement.

Department: Department of Transportation District 5 Office
Name: Amanda Nino
Title: Capital Outlay District Coordinator
Address: P.O. Box 4127, Santa Fe, NM 87502
Email: Amanda.Nino@dot.nm.gov
Telephone: 505-660-6357

The Grantee and the Department agree that either party shall send all notices, including written decisions, related to this Agreement to the above named persons by email or regular mail. In the case of mailings, notices shall be deemed to have been given and received upon the date of the receiving party's actual receipt or five calendar days after mailing, whichever shall first occur. In the case of email transmissions, the notice shall be deemed to have been given and received on the date reflected on the delivery receipt of email.

ARTICLE IV. REVERSION DATE, TERM, DEADLINE TO EXPEND FUNDS

A. As referenced in Article I(A), the applicable law establishes a date by which Project funds must be expended by Grantee, which is referred to throughout the remainder of this Agreement as the "Reversion Date." Upon being duly executed by both parties, this Agreement shall be effective as of the date of execution by the Department. It shall terminate on 6/30/2026 the Reversion Date unless Terminated Before Reversion Date ("Early Termination") pursuant to Article V herein.

B. The Project's funds must be expended on or before the Reversion Date and, if applicable, Early Termination Date of this Agreement. For purposes of this Agreement, it is not sufficient for the Grantee to encumber the Project funds on its books on or before the Project's Reversion Date or Early Termination Date. Funds are expended and an expenditure has occurred as of the date that a particular quantity of goods are delivered to and received by the Grantee or title to the goods is transferred to the Grantee and/or as of the date particular services are rendered for the Grantee. Funds are ***not*** expended and an expenditure has ***not*** occurred as of the date they are encumbered by the Grantee pursuant to a contract or purchase order with a third party.

ARTICLE V. EARLY TERMINATION

A. Early Termination Before Reversion Date Due to Completion of the Project or Complete Expenditure of the Adjusted Appropriation or Violation of this Agreement

Early Termination includes:

(i) Termination due to completion of the Project before the Reversion Date; or

(ii) Termination due to complete expenditure of the Adjusted Appropriation Amount before the Reversion Date; or

(iii) Termination for violation of the terms of this Agreement; or

(iv) Termination for suspected mishandling of public funds, including but not limited to, fraud, waste, abuse, and conflicts of interest.

Either the Department or the Grantee may early terminate this Agreement prior to the Reversion Date by providing the other party with a minimum of fifteen (15) days' advance, written notice of early termination. Grantee hereby waives any rights to assert an impairment of contract claim against the Department or the State of New Mexico in the event of Early Termination of this Agreement by the Department pursuant to Article V(A).

B. Early Termination Before Reversion Date Due to Non-appropriation

The terms of this Agreement are expressly made contingent upon sufficient appropriations and authorization being made by the Legislature of New Mexico for the performance of this Agreement. Throughout this Agreement the term "non-appropriate" or "non-appropriation" includes the following actions by the New Mexico Legislature: deauthorization, reauthorization or revocation of a prior authorization. The Legislature may choose to non-appropriate the Appropriation referred to in Article I and, if that occurs, the Department shall early terminate this Agreement for non-appropriation by giving the Grantee written notice of such termination, and such termination shall be effective as of the effective date of the law making the non-appropriation. The Department's decision as to whether sufficient appropriations or authorizations are available shall be accepted by the Grantee and shall be final. Grantee hereby waives any rights to assert an impairment of contract claim against the Department or the State of New Mexico in the event of Early Termination of this Agreement by the Department pursuant to Article V(B).

C. Limitation on Department's Obligation to Make Grant Disbursements to Grantee in the Event of Early Termination

In the event of Early Termination of this Agreement by either party, the Department's sole and absolute obligation to reimburse the Grantee is expressly conditioned upon the limitations set forth Article II.

ARTICLE VI. SUSPENSION OF NEW OR FURTHER OBLIGATIONS

A. The Department may choose, in its sole and absolute discretion, to provide written notice to the Grantee to suspend entering into new and further obligations. Upon the receipt of such written notice by the Grantee:

(i) The Grantee shall immediately suspend entering into new or further written obligations with third parties; and

(ii) The Department will suspend the issuance of any new or further Notice of Obligation under this Agreement; and

(iii) The Department may direct the Grantee to implement a corrective action plan in accordance with Article VI(D) herein.

B. In the event of Suspension of this Agreement, the Department's sole and absolute obligation to reimburse the Grantee is expressly conditioned upon the limitations set forth in Article II herein.

C. A suspension of new or further obligations under this Agreement shall remain in effect unless or until the date the Grantee receives written notice given by the Department informing the Grantee that the Suspension has been lifted or that the Agreement has been Early Terminated in accordance with Article V herein. If the Suspension is lifted, the Department will consider further requests for Notice of Obligation.

D. Corrective Action Plan in the Event of Suspension

In the event that the Department chooses, in its sole and absolute discretion to direct the Grantee to suspend entering into new or further written obligations with third parties pursuant to Article VI(A), the Department may, but is not obligated to, require the Grantee to develop and implement a written corrective action plan to remedy the grounds for the Suspension. Such corrective action plan must be approved by the Department and be signed by the Grantee. Failure to sign a corrective action plan or meet the terms and deadlines set forth in the signed corrective action plan, is hereby deemed a violation of the terms of this Agreement for purposes of Early Termination, Article V(A)(iii). The corrective action plan is in addition to, and not in lieu of, any other equitable or legal remedy, including but not limited to Early Termination.

ARTICLE VII. AMENDMENT

This Agreement shall not be altered, changed, or amended except by instrument in writing duly executed by both the parties hereto.

ARTICLE VIII. REPORTS

A. Database Reporting

The Grantee shall report quarterly Project activity by entering such Project information as the Department and the Department of Finance and Administration may require, such information entered directly into a database maintained by the Department of Finance and Administration (Budget & Formulation Management System). Additionally, the Grantee shall certify on the Request for Payment form (Exhibit 1) that updates have been maintained and are current in the database. The Grantee hereby acknowledges that failure to perform and/or certify updates into the database will delay or potentially jeopardize the reimbursement of funds. The Department shall give Grantee a minimum of thirty (30) days' advance written notice of any changes to the information the Grantee is required to report.

Quarterly reports shall be due on the last day of the month that is 30 days prior to the end of the quarter following execution of this Agreement by the Department and ending during the quarter of the submission of the final request for reimbursement for the Project, or the following quarter.

B. Requests for Additional Information/Project Inspection

During the term of this Agreement and during the period of time during which the Grantee must maintain records pursuant to Article VIII, the Department may:

(i) request such additional information regarding the Project as it deems necessary; and

(ii) conduct, at reasonable times and upon reasonable notice, onsite inspections of the Project.

Grantee shall respond to such requests for additional information within a reasonable period of time, as established by the Department.

ARTICLE IX. REQUEST FOR PAYMENT PROCEDURES AND DEADLINES

A. The Grantee shall request payment by submitting a Request for Payment, in the form attached hereto as Exhibit 1. Payment requests are subject to the following procedures:

(i) The Grantee must submit a Request for Payment; and

(ii) Each Request for Payment must contain proof of payment by the Grantee or liabilities incurred by the Grantee showing that the expenditures are valid or are liabilities incurred by the Grantee in the form of actual unpaid invoices received by the Grantee for services rendered by a third party or items of tangible personal property received by the Grantee for the implementation of the Project; provided, however, that the Grantee may be reimbursed for unpaid liabilities only if the Department, in its sole and absolute discretion, agrees to do so and in accordance with any special conditions imposed by the Department.

(iii) In cases where the Grantee is submitting a Request for Payment to the Department based upon invoices received, but not yet paid, by the Grantee from a third party contractor or vendor, if the invoices comply with the provisions of this Agreement and are a valid liability of the Grantee, the Grantee shall make payment to those contractors or vendors within five (5) business days from the date of receiving reimbursement from the Department or such shorter period of time as the Department may prescribe in writing. The Grantee is required to certify to the Department proof of payment to the third party contractor or vendor within ten (10) business days from the date of receiving reimbursement from the Department.

B. The Grantee must obligate 5% of the Adjusted Appropriation Amount within six months of acceptance of the grant agreement and must have expended no less than 85% of the Adjusted Appropriation Amount six months prior to the reversion date.

C. **Deadlines**

Requests for Payments shall be submitted by Grantee to the Department on the earlier of:

(i) Immediately as they are received by the Grantee but at a minimum thirty (30) days from when the expenditure was incurred or liability of the Grantee was ~~a~~pproved as evidenced by an unpaid invoice received by the Grantee from a third party contractor or vendor; or

(ii) Twenty (20) days from date of Early Termination; or

(iii) Twenty (20) days from the Reversion Date.

D. The Grantee's failure to abide by the requirements set forth in Article II and Article IX herein will result in the denial of its Request for Payment or will delay the processing of Requests for Payment. The Department has the right to reject a payment request for the Project unless and until it is satisfied that the expenditures in the Request for Payment are for permissible purposes within the meaning of the Project Description and that the expenditures and the Grantee are otherwise in compliance with this Agreement, including but not limited to, compliance with the reporting requirements and the requirements set forth in Article II herein to provide Third Party Obligations and the Deadlines set forth in Article IX herein. The Department's ability to reject any Request for Payment is in addition to, and not in lieu of, any other legal or equitable remedy available to the Department due to Grantee's violation of this Agreement.

ARTICLE X. PROJECT CONDITIONS AND RESTRICTIONS; REPRESENTATIONS AND WARRANTIES

A. The following general conditions and restrictions are applicable to the Project:

(i) The Project's funds must be spent in accordance with all applicable state laws, regulations, policies, and guidelines, including, but not limited to, the State Procurement Code (or local procurement ordinance, where applicable).

(ii) The Project must be implemented in accordance with the New Mexico Public Works Minimum Wage Act, Section 13-4-10 through 13-4-17 NMSA 1978, as applicable. Every contract or project in excess of sixty thousand dollars ($60,000) that the Grantee is a party to for construction, alteration, demolition or repair or any combination of these, including painting and decorating, of public buildings, public works or public roads and that requires or involves the employment of mechanics, laborers or both shall contain a provision stating the minimum wages and fringe benefits to be paid to various classes of laborers and mechanics, shall be based upon the wages and benefits that will be determined by the New Mexico Department of Workforce Solutions to be prevailing for the corresponding classes of laborers and mechanics employed on contract work of a similar nature in the locality. Further, every contract or project shall contain a stipulation that the contractor, subcontractor, employer or a person acting as a contractor shall pay all mechanics and laborers employed on the site of the project, unconditionally and not less often than once a week and without subsequent unlawful deduction or rebate on any account, the full amounts accrued at time of payment computed at wage rates and fringe benefit rates not less than those determined pursuant to Section 13-4-11 (B) NMSA 1978 to be the prevailing wage rates and prevailing fringe benefit rates issued for the project.

(iii) The Project may only benefit private entities in accordance with applicable law, including, but not limited to, Article IX, Section 14 of the Constitution of the State of New Mexico, the "Anti-Donation Clause."

(iv) The Grantee shall not for a period of 10 years from the date of this agreement convert any property acquired, built, renovated, repaired, designed or developed with the Project's funds to uses other than those specified in the Project Description without the Department's and the Board of Finance's express, advance, written approval, which may include a requirement to reimburse the State for the cost of the project, transfer proceeds from the disposition of property to the State, or otherwise provide consideration to the State.

(v) The Grantee shall comply with all federal and state laws, rules and regulations pertaining to equal employment opportunity. In accordance with all such laws, rules and regulations the Grantee agrees to assure that no person shall, on the grounds of race, color, national origin, sex, sexual preference, age or handicap, be excluded from employment with Grantee, be excluded

from participation in the Project, be denied benefits or otherwise be subject to discrimination under, any activity performed under this Agreement. If Grantee is found to be not in compliance with these requirements during the life of this Agreement, Grantee agrees to take appropriate steps to correct any deficiencies. The Grantee's failure to implement such appropriate steps within a reasonable time constitutes grounds for terminating this Agreement.

B. The Grantee hereby represents and warrants the following:

(i) The Grantee has the legal authority to receive and expend the Project's funds.

(ii) This Agreement has been duly authorized by the Grantee, the person executing this Agreement has authority to do so, and, once executed by the Grantee, this Agreement shall constitute a binding obligation of the Grantee, enforceable according to its terms.

(iii) This Agreement and the Grantee's obligations hereunder do not conflict with any law or ordinance or resolution applicable to the Grantee, the Grantee's charter (if applicable), or any judgment or decree to which the Grantee is subject.

(iv) The Grantee has independently confirmed that the Project Description, including, but not limited to, the amount and Reversion Date, is consistent with the underlying appropriation in law.

(v) The Grantee's governing body has duly adopted or passed as an official act a resolution, motion, or similar action authorizing the person identified as the official representative of the Grantee to sign the Agreement and to sign Requests for Payment.

(vi) The Grantee shall abide by New Mexico laws regarding conflicts of interest, governmental conduct and whistleblower protection. The Grantee specifically agrees that no officer or employee of the local jurisdiction or its designees or agents, no member of the governing body, and no other public official of the locality who exercises any function or responsibility with respect to this Grant, during their tenure or for one year thereafter, shall have any interest, direct or indirect, in any contract or subcontract, or the proceeds thereof, for work to be performed or goods to be received, pursuant to this Grant. Further, Grantee shall require all of its contractors to incorporate in all subcontracts the language set forth in this paragraph prohibiting conflicts of interest.

(vii) No funds have been paid or will be paid, by or on behalf of the Grantee, to any person for influencing or attempting to influence an officer or employee of this or any agency or body in connection with the awarding of any Third Party Obligation and that the Grantee shall require certifying language prohibiting lobbying to be included in the award documents for all subawards, including subcontracts, loans and cooperative agreements. All subrecipients shall be required to certify accordingly.

ARTICLE XI. STRICT ACCOUNTABILITY OF RECEIPTS AND DISBURSEMENTS; PROJECT RECORDS

A. The Grantee shall be strictly accountable for receipts and disbursements relating to the Project's funds. The Grantee shall follow generally accepted accounting principles, and, if feasible, maintain a separate bank account or fund with a separate organizational code, for the funds to assure separate budgeting and accounting of the funds.

B. For a period of six (6) years following the Project's completion, the Grantee shall maintain all Project related records, including, but not limited to, all financial records, requests for proposals, invitations to bid, selection and award criteria, contracts and subcontracts, advertisements, minutes of pertinent meetings, as well

as records sufficient to fully account for the amount and disposition of the total funds from all sources budgeted for the Project, the purpose for which such funds were used, and such other records as the Department shall prescribe.

C. The Grantee shall make all Project records available to the Department, the Department of Finance and Administration, and the New Mexico State Auditor upon request. With respect to the funds that are the subject of this Agreement, if the State Auditor or the Department of Finance and Administration finds that any or all of these funds were improperly expended, the Grantee may be required to reimburse to the State of New Mexico, to the originating fund, any and all amounts found to be improperly expended.

ARTICLE XII. IMPROPERLY REIMBURSED FUNDS

If the Department determines that part or all of the Appropriation Amount was improperly reimbursed to Grantee, including but not limited to, Project funds reimbursed to Grantee based upon fraud, mismanagement, misrepresentation, misuse, violation of law by the Grantee, or violation of this Agreement, the Grantee shall return such funds to the Department for disposition in accordance with law.

ARTICLE XIII. LIABILITY

Neither party shall be responsible for liability incurred as a result of the other party's acts or omissions in connection with this Agreement. Any liability incurred in connection with this Agreement is subject to immunities and limitations of the New Mexico Tort Claims Act.

ARTICLE XIV. SCOPE OF AGREEMENT

This Agreement constitutes the entire and exclusive agreement between the Grantee and Department concerning the subject matter hereof. The Agreement supersedes any and all prior or contemporaneous agreements, understandings, discussions, communications, and representations, written or verbal.

ARTICLE XV. REQUIRED NON-APPROPRIATIONS CLAUSE IN CONTRACTS FUNDED IN WHOLE OR PART BY FUNDS MADE AVAILABLE UNDER THIS AGREEMENT

The Grantee acknowledges, warrants, and agrees that Grantee shall include a "non-appropriations" clause in all contracts between it and other parties that are (i) funded in whole or part by funds made available under this Agreement and (ii) entered into after the effective date of this Agreement that states:

"The terms of this Agreement are contingent upon sufficient appropriations and authorization being made by the Legislature of New Mexico for the performance of this Agreement. If sufficient appropriations and authorization are not made by the Legislature, the City of Santa Fe may immediately terminate this Agreement by giving Contractor written notice of such termination. The City of Santa Fe's decision as to whether sufficient appropriations are available shall be accepted by the Contractor and shall be final. Contractor hereby waives any rights to assert an impairment of contract claim against the City of Santa Fe or the Department of Transportation or the State of New Mexico in the event of immediate or Early Termination of this Agreement by the City of Santa Fe or the Department"

ARTICLE XVI. REQUIRED TERMINATION CLAUSE IN CONTRACTS FUNDED IN WHOLE OR PART BY FUNDS MADE AVAILABLE UNDER THIS AGREEMENT

Grantee acknowledges, warrants, and agrees that Grantee shall include the following termination clause in all contracts that are (i) funded in whole or part by funds made available under this Agreement and (ii) entered into after the effective date of this Agreement:

"This contract is funded in whole or in part by funds made available under a Department of Transportation Grant Agreement. Should the Department of Transportation early terminate the grant agreement, the City of Santa Fe may early terminate this contract by providing Contractor written notice of such termination. In the event of termination pursuant to this paragraph, the City of Santa Fe only liability shall be to pay Contractor for acceptable goods delivered and services rendered before the termination date."

Grantee hereby waives any rights to assert an impairment of contract claim against the Department or the State of New Mexico in the event of Early Termination of this Agreement by the Department.

XVII. COMPLIANCE WITH UNIFORM FUNDING CRITERIA.

A. Throughout the term of this Agreement, Grantee shall:

1. submit all reports of annual audits and agreed upon procedures required by Section 12-6-3(A)-(B) NMSA 1978 by the due dates established in 2.2.2 NMAC, reports of which must be a public record pursuant to Section 12-6-5(A) NMSA 1978 within forty-five days of delivery to the State Auditor;
2. have a duly adopted budget for the current fiscal year approved by its budgetary oversight agency (if any);
3. timely submit all required financial reports to its budgetary oversight agency (if any); and
4. have adequate accounting methods and procedures to expend grant funds in accordance with applicable law and account for and safeguard grant funds and assets acquired by grant funds.

B. In the event Grantee fails to comply with the requirements of Paragraph A of this Article XVII, the Department may take one or more of the following actions:

1. suspend new or further obligations pursuant to Article VI(A) of this Agreement;
2. require the Grantee to develop and implement a written corrective action plan pursuant to Article VI(D) of this Agreement to remedy the non-compliance;
3. impose special grant conditions to address the non-compliance by giving the Grantee notice of such special conditions in accordance with Article III of this Agreement; the special conditions shall be binding and effective on the date that notice is deemed to have been given pursuant to Article III; or
4. terminate this Agreement pursuant to Article V(A) of this Agreement.

ARTICLE XVIII. SEVERANCE TAX BOND AND GENERAL OBLIGATION BOND PROJECT CLAUSES

A. Grantee acknowledges and agrees that the underlying appropriation for the Project is a severance tax bond or general obligation bond appropriation, and that the associated bond proceeds are administered by the New Mexico State Board of Finance (SBOF), an entity separate and distinct from the Department. Grantee acknowledges and agrees that (i) it is Grantee's sole and absolute responsibility to determine through SBOF staff what (if any) conditions are currently imposed on the Project; (ii) the Department's failure to inform Grantee of a SBOF imposed condition does not affect the validity or enforceability of the condition; (iii) the

DocuSign Envelope ID: D68910AB-CDC7-4A64-848A-D7DAE50D49A1

SBOF may in the future impose further or different conditions upon the Project; (iv) all SBOF conditions are effective without amendment of this Agreement; (v) all applicable SBOF conditions must be satisfied before the SBOF will release to the Department funds subject to the condition(s); and (vi) the Department's obligation to reimburse Grantee from the Project is contingent upon the then current SBOF conditions being satisfied.

B. Grantee acknowledges and agrees that the SBOF may in its sole and absolute discretion remove a project's assigned bond proceeds if the project doesn't proceed sufficiently. Entities must comply with the requirement to encumber five percent (5%) of Project funds within six months of bond issuance as certified by the grantee in the Bond Questionnaire and Certification documents submitted to the SBOF. Failure to comply may result in the bond proceeds reassignment to a new ready project. If this should occur this grant agreement will be suspended until the entity has demonstrated readiness as determined by the SBOF and the Department.

C. Grantee acknowledges and agrees that this Agreement is subject to the SBOF's Bond Project Disbursements rule, NMAC 2.61.6, as may be amended or re-codified. The rule provides definitions and interpretations of grant language for the purpose of determining whether a particular activity is allowable under the authorizing language of the agreement.

[THIS SPACE LEFT BLANK INTENTIONALLY]

DocuSign Envelope ID: D68910AB-CDC7-4A64-848A-D7DAE50D49A1

IN WITNESS WHEREOF, the parties have duly executed this Agreement as of the date of execution by the Department.

GRANTEE

Alan Webber (Nov 4, 2024 11:59 MST)

Signature of Official with Authority to Bind Grantee

City of Santa Fe

Entity Name

By: Alan Webber

(Type or Print Name)

Its: Mayor

(Type or Print Title)

Nov 4, 2024

Date

DEPARTMENT OF TRANSPORTATION

By:

Its: Cabinet Secretary or Designee

Date

REVIEWED AND APPROVED AS TO FORM AND LEGAL SUFFICIENCY BY THE DEPARTMENT'S OFFICE OF GENERAL COUNSEL

DocuSigned by:

Aaron Frankland
Deputy General Counsel

3B498DD07FBC44A...

By: Aaron Frankland or Designee

Its: Deputy General Counsel

04/22/24

Date

IN WITNESS WHEREOF, the parties have executed this Capital Appropriation Project as of the dates set forth below.

CITY OF SANTA FE:

SEE ABOVE

_____

ALAN WEBBER, MAYOR

ATTEST:

_____

GERALYN CARDENAS, INTERIM CITY CLERK

GB MTG 10/30/2024 XIV

CITY ATTORNEY'S OFFICE:

Marcos Martinez

Marcos Martinez (Jun 14, 2024 09:14 MDT)

SENIOR ASSISTANT CITY ATTORNEY

FINANCE DIRECTOR:

Emily K. Oster

_____

EMILY OSTER

DocuSign Envelope ID: D68910AB-CDC7-4A64-848A-D7DAE50D49A1

STATE OF NEW MEXICO
CAPITAL GRANT PROJECT
Request for Payment Form
Exhibit 1

I. Grantee Information

(Make sure information is complete & accurate)

A. Grantee: _____

B. Address: _____

(Complete Mailing, including Suite, if applicable)

_____

City State Zip

C. Phone No: _____

D. Grant No: _____

E. Project Title: _____

F. Grant Expiration Date: _____

II. Payment Computation

A. Payment Request No. _____

B. Grant Amount: _____

C. AIPP Amount *(If Applicable)*: _____

D. Funds Requested to Date: _____

E. Amount Requested this Payment: _____

F. Reversion Amount (*If Applicable*): _____

G. Grant Balance: _____

H. ☐ GF ☐ GOB ☐ STB (*attach wire if first draw*)

I. ☐ Final Request for Payment (*if Applicable*)

III. Fiscal Year : _____

(The State of NM Fiscal Year is July 1, 20XX through June 30, 20XX of the following year)

IV. ☐ **Reporting Certification:** I hereby certify to the best of my knowledge and belief, that database reporting is up to date; to include the accuracy of expenditures and grant balance, project status, project phase, achievements and milestones; and in compliance with Article VIII of the Capital Outlay Grant Agreement.

V. ☐ **Compliance Certification:** Under penalty of law, I hereby certify to the best of my knowledge and belief, the above information is correct; expenditures are properly documented, and are valid expenditures or actual receipts; and that the grant activity is in full compliance with Article IX, Sec. 14 of the New Mexico Constitution known as the "anti donation" clause.

Grantee Fiscal Officer or **Fiscal Agent** (*if applicable*)	**Grantee Representative**
Printed Name	Printed Name
Date:	Date:

(State Agency Use Only)

Vendor Code: _____ **Fund No.:** _____ **Loc No.:** _____

I certify that the State Agency financial and vendor file information agree with the above submitted information.

Division Fiscal Officer	Date	Division Project Manager	Date

DocuSign Envelope ID: D68910AB-CDC7-4A64-848A-D7DAE50D49A1

NOTICE OF OBLIGATION TO REIMBURSE GRANTEE
EXHIBIT 2

Notice of Obligation to Reimburse Grantee [# 1]

DATE: [_____]

TO: Department Representative: [_____, _____]
FROM: Grantee: [_____]
Grantee Official Representative: [_____]

SUBJECT: Notice of Obligation to Reimburse Grantee
Grant Number: [_____]
Grant Termination Date: [_____]

As the designated representative of the Department for Grant Agreement number [_____] entered into between Grantee and the Department, I certify that the Grantee has submitted to the Department the following third party obligation executed, in writing, by the third party's authorized representative:

Vendor or Contractor: [_____]
Third Party Obligation Amount: [_____]

Vendor or Contractor: [_____]
Third Party Obligation Amount: [_____]

Vendor or Contractor: [_____]
Third Party Obligation Amount: [_____]

I certify that the State is issuing this Notice of Obligation to Reimburse Grantee for permissible purposes within the scope of the project description, subject to all the terms and conditions of the above referenced Grant Agreement.

Grant Amount (Minus AIPP if applicable): [_____]
The Amount of this Notice of Obligation: [_____]
The Total Amount of all Previously Issued Notices of Obligation: [_____]
The Total Amount of all Notices of Obligation to Date: [_____]
Note: Contract amounts may exceed the total grant amount, but the invoices paid by the grant will not exceed the grant amount.

Department Rep. Approver: [_____]
Title: [PROJECT MANAGER]
Signature: [_____]
Date: [_____]

1 Administrative and/or Indirect Cost – generally, the legislation authorizing the issuance of bonds prohibits the use of its proceeds for indirect expenses (e.g. penalty fees or damages other than pay for work performed, attorney fees, and administrative fees). Such use of bond proceeds shall not be allowed unless specifically authorized by statute.

DocuSign Envelope ID: D68910AB-CDC7-4A64-848A-D7DAE50D49A1

The City of Santa Fe shall agree to comply with the following Provisions:

1. Assume the lead role for the Project.
2. Be responsible for all applicable design, environmental and archaeological clearances, and right-of-way acquisition, in accordance with current local, state, federal laws, Uniform Relocation Act, and current design practices and specifications.
3. Be responsible for project development, project construction, construction management, and testing.
4. Utilize the Project Control Number in all correspondence and submittals to the Department.
5. Adopt a written resolution of support for the Project, including as applicable an assumption of ownership, liability, and maintenance responsibility for the scope, or related amenities and required funding to support the Project.
6. Complete the Project using current American Public Works Association (APWA) specifications, implemented Grantee's design standards and specifications, or Department specifications.
7. Use Rental Rate Blue Book rates, if not provided in the Department established equipment rates, in the implementation of this Project. Any equipment rates not found in the Department established rates shall be reimbursed at the Blue Book rates.

The City of Santa Fe shall agree to comply with the following Lighting and Signal Provisions as applicable:

1. After subject signal system(s) has/have been constructed, make provisions for and provide, at its own expense, all electrical energy, routine maintenance such as lamp replacement, emergency shutdown in case of accidental damage or equipment failure and make any repairs necessary due to accidental damage to, or equipment failure of, the signal head and poles.
2. In the event that accidental damage or equipment failure should occur, provide for equipment shut down/or emergency traffic control as needed. In addition, should the accidental damage or equipment failure involve the Controller (and cabinet) or the loop detection system, promptly notify the Traffic Technical Support Bureau of the Department.
3. In the event that the traffic signal should be rendered completely inoperable as a result of accidental damage, secure the intersection with stop signs at all approach legs until such time as the traffic signal is made operable.
4. Make ample future provisions in its budget each year for the cost of maintaining and providing energy to the traffic signals and telephone service to the signal system and intersection lighting.
5. At its own expense, maintain the signal controller and control equipment (the "Controller") including and maintenance of the machine vision vehicle detection system with cameras and emergency vehicle pre-empt system and repair or replace the Controller in the event the Controller and/or cabinet is damaged or there is an equipment failure.
6. After the installation of the roadway lighting system, if any, provide any and all utilities, maintenance, and such other items as may be necessary of continued satisfactory operation of said subject lighting system.
7. Make all timing adjustments to the Signal Control equipment and review the Signal System(s) for efficient and satisfactory operation.
8. Obtain approval from the Department for all signal equipment prior to installation.
9. Require the construction contractor to name the Department and the Grantee as an additional insured in the construction contractor's general liability policy.
10. Enter into a Signalization and Lighting Agreement with the Department's Traffic Technical Support Bureau as required.

DocuSign Envelope ID: D68910AB-CDC7-4A64-848A-D7DAE50D49A1

1.

Log # *{Finance use only}*:	
Journal # *{Finance use only}*:	

City of Santa Fe, New Mexico
BUDGET AMENDMENT RESOLUTION (BAR)

DEPARTMENT / DIVISION NAME	DATE
Public Works Department / PARKS	4/30/2024

ITEM DESCRIPTION	ORG	OBJECT	PROJECT	INCREASE	DECREASE
EXPENDITURES				*{enter as positive #}*	*{enter as negative #}*
WIP CONSTRUCTION - MEDIAN IMPROVEMENTS PH I	3559980	572970	CIP2433001	1,170,000	
REVENUES				*{enter as negative #}*	*{enter as positive #}*
NM DOT - MEDIAN IMPROVEMENTS PH I	35599880	490150	CIP2433001	(1,170,000)	
				$ -	$ -

JUSTIFICATION: *(use additional page if needed)*
–Attach supporting documentation/memo

NM DOT GRANT AWARD VIA DFA IN THE AMOUNT OF $1,170,000 FOR MEDIAN IMPROVEMENTS. EXPIRING 06/30/26

{Complete section below if BAR results in a net change to ANY Fund}

Fund(s) Affected	Fund Balance Increase/(Decrease)
TOTAL:	0

{Use this form for Finance Committee/ City Council agenda items ONLY}

CITY COUNCIL APPROVAL

City Council Approval Date

Agenda Item #:

Halona Crowe	4/30/2024	Andy Hopkins	Oct 1, 2024
Prepared By *{print name}*	Date	Budget Officer: Andy J. Hopkins	Date
Melissa McDonald	Sep 26, 2024		
Division Director Signature *{optional}*	Date	Finance Director *{≤ $5,000}*	Date
Regina Wheeler (Sep 29, 2024 07:26 MDT)	Sep 29, 2024		
Department Director Signature: Regina A. Wheeler	Date	City Manager *{≤ $60,000}*	Date

City of Santa Fe New Mexico

Finance Department

Project Ledger Request Form

Date of Request: 7/3/2024

Project Title: Median Phase 1 Improvements

Project Type: ☑ CIP ☑ Grant ☐ Internal Tracking

Project ID: CIP2433001

Grant ID: _____

Approved By: _____

(Finance Use Only)

Department: Public Works Project Manager: Scott Overlie Ext: _____

Project Date Range: 5/1/2024 to 6/30/2026 ☐ Create Fixed Asset

---

☑ Multi-Funding (complete all funding sources, should equal 100%)

Funding Source: STB - NM DOT % of Funding: _____

MUNIS ORG: 3559980 MUNIS OBJ: 572970 Awarded Amount: 1,170,000

Funding Source: _____ % of Funding: _____

MUNIS ORG: _____ MUNIS OBJ: _____ Awarded Amount: _____

Expense String Phase:

A project must have at least one phase identified, this can be used as an additional level of tracking, for example, CIP - Design, Construction, etc. For Grants can be used as reimbursable types, such as transportation, salaries.

(You can create more than one phase and you can default MUNIS ORGs and OBJs, optional)

Phase: Phase 1 MUNIS ORG: 3559980 MUNIS OBJ: 490150

Grants Only (list all grants if applicable):

Grantor Name: STB - NM DOT Awarded Amount: 1,170,000

AR Charge Code: _____ ☐ Grant funds multiple projects (Complete a form for each project)

Grantor Id: _____ Federal CFDA (if applicable): _____

Grantor Name: _____ Awarded Amount: _____

AR Charge Code: _____ ☐ Grant funds multiple projects (Complete a form for each project)

Grantor Id: _____ Federal CFDA (if applicable): _____

(If grants please provide all grant award documents with form) ☐ Attached Grant Documentation

Signature: Scott Overlie
Scott Overlie (Sep 24, 2024 10:23 MDT)

Email: saoverlie@santafenm.gov

Signature: Sam Moody

Email: sxmoody@santafenm.gov

City of Santa Fe

Summary of Contract, Agreement, Amendment & Lease

All applicable fields to be completed by department (complete 1.b only if you are processing an amendment):

1.a Munis Contract: 3204794 Procurement # (RFP/ITB# If any):

Contractor: New Mexico State Department of Transportation

Procurement Method/Vehicle: *Small Purchase* ☐ *RFP* ☐ *ITB* ☐ *Sole Source* ☐ *GSA* ☐ *Cooperative* ☐ Exempt ☐ SWPA/Existing ☐

Description/Title: 22-G3165 Appropriation Grant COSF Median Beautification Project

Contract: ☒ Agreement: ○ Lease/Rent: ○ Amendment: ○

Term Start Date: upon signature Term End Date: 6/30/2026 Total Contract Amount: 1,170,000.00

☐ Approved by Council *(If over the City Manager's approval threshold, you must go through GB)*

Contract / Lease:

1.b Amendment #: to the Original Contract/Lease #

Increase/(Decrease) Amount $:

Extend Expiration Date to:

☐ Approved by Council *(If the original went through GB, all amendments must go through GB regardless of the amendment reason)* Date:

Amendment is for:

2. HISTORY of Contract, Amendments & Lease / Rent - Please Elaborate (option: attach spreadsheet if multiple amendments)

New Mexico DOT grant for City of SF Median Beautification design and construction- Phase I

3. Procurement History:

Purchasing Officer Review: Date:

Comment & Exceptions:

4. Funding Source: STB - NM DOT **Org / Object:** 3559980/490150

Andy Hopkins Oct 1, 2024

Budget Officer Approval: Date:

Comment & Exceptions:

5. Grant History (if applicable):

Grants Administrator Approval: Matthew Bonifer Matthew Bonifer (Oct 1, 2024 11:56 MDT) **Date** Oct 1, 2024

Staff Contact who Completed This Form: Scott Overlie Phone #: 505-231-6194

To be recorded by City Clerk: Email: saoverlie@santafenm.gov

Clerk #

Date of Execution:

ITT Representative (attesting that all information is reviewed) Title Date

Signature: XAVIER VIGIL
XAVIER VIGIL (Nov 4, 2024 11:53 MST)

Email: xivigil@santafenm.gov

INTERGOVERNMENTAL SERVICES AGREEMENT
BETWEEN CITY OF SANTA FE AND
NORTH CENTRAL NEW MEXICO ECONOMIC DEVELOPMENT DISTRICT
FOR FISCAL AGENT SERVICES

WHEREAS, the State of New Mexico appropriated funding for the purposes of improvements in the City of Santa Fe ("City") to the State of New Mexico, Department of Finance and Administration, Local Government Division, in the laws of Laws of 2021, Chapter 138, as detailed below ("Projects");

WHEREAS, NCNMEDD acknowledges that the appropriations for the Projects are intended for City;

WHEREAS, City, a municipality within Santa Fe County and the State of New Mexico, agrees to engage North Central New Mexico Economic Development District ("NCNMEDD") in providing fiscal agency services in relation to the Projects.

NOW, THEREFORE, the parties do mutually agree as follows:

This Agreement is entered into by and between City and NCNMEDD pursuant to the following purposes, conditions, and terms:

A. PURPOSE

The purpose of this Agreement is for NCNMEDD to provide fiscal agent services in connection with the Projects as specifically appropriated under New Mexico Legislative Appropriation Agreements identified as follows:

ApprID	Leg. Session	Appropriation Title	Year	Ch	Sect	Agency		Amount	Project Description
F2900	2021	SANTA FE PARKS UPGRADE	2021	138	29/341	341	Finance & Administration	1,000,000	to plan, design, construct, repair, improve and equip parks in Santa Fe in Santa Fe county;
F2902	2021	SANTA FE TIERRA CONTENTA TRAIL CONSTRUCT	2021	138	29/343	341	Finance & Administration	300,000	to plan, design and construct a trail in the Tierra Contenta subdivision in Santa Fe in Santa Fe county;
F2903	2021	SANTA FE MIDTOWN INFRA DES CONSTRUCT	2021	138	29/344	341	Finance & Administration	1,000,000	to plan, design, construct and improve infrastructure for the midtown Santa Fe property in Santa Fe in Santa Fe county;
F2899	2021	SANTA FE HOMEBOUND MEALS PROGRAM IMPROVE	2021	138	29/340	341	Finance & Administration	250,000	to plan, design, renovate, construct, improve and equip a facility for a meals program serving homebound and special needs individuals in Santa Fe in Santa Fe county;
F2901	2021	SANTA FE SOUTHSIDE TEEN CTR CONSTRUCT	2021	138	29/342	341	Finance & Administration	1,805,000	to plan, design, construct, furnish and equip a teen and resource center on the south side of Santa Fe in Santa Fe county;

Other projects may be included as agreed upon in writing and by amendment between the Parties.

B. SCOPE OF WORK

NCNMEDD's services in support of the above purpose shall be to provide fiscal agency services associated with the Projects, including:

1. NCNMEDD Fiscal Agency Services:

- Ensure that grant funds are expended in compliance with all applicable laws, regulations, and grant agreement and the transactions are appropriately accounted for in compliance with such laws, regulations, and grant agreement;
- Ensure safeguarding of grant funds and assets acquired with grant funds and proper accounting thereof in compliance with applicable laws, regulations, and grant agreement;
- Act as liaison between City and appropriate New Mexico state agencies as needed;
- Complete all required quarterly and financial reporting with information provided by City;
- Review and sign-off on project invoices to the appropriate State agency in a timely manner; and

- Work with the State on providing direct project reimbursements to City and act as a facilitator for such reimbursements as needed.

2. City Role and Responsibilities
   - City understands it remains ultimately responsible for executing and complying with all applicable laws, regulations, and grant agreement requirements such as flow down provisions, executing procurement responsibilities, and subcontractor management, as well as project, grant, and financial management.

C. TIMEFRAME

Work pursuant to this Agreement shall be effective no sooner than the date of last party signature below, and shall conclude upon notice by either party pursuant to paragraph I, but no later than one month following the reversion date of the appropriations, except as amended and mutually agreed upon in writing.

D. COMPENSATION:

NCNMEDD has agreed to provide the agreed upon services at three percent (3%) of the dollar amount(s) the City expends during the term of this Agreement towards the completion of the Projects, as those amounts were appropriated. Billing for services to City shall occur by NCNMEDD no more than on a monthly basis. The City will not use funds from this grant to make such payments.

E. RECORDS AND RECOVERY:

NCNMEDD shall maintain appropriate records of services rendered during the Agreement term and retain them for a period of three (3) years after the grant has been closed.

F. ACCESS TO INFORMATION

City and its contractors and subcontractors shall provide information, as needed, for purposes and work described in this Agreement. NCNMEDD will be included and copied on all invoices and reports, prior to City's submission to the appropriate State agency.

G. OWNERSHIP OF PROJECTS

All documents, capital improvements, and project assets produced pursuant to this Agreement shall be the property of City which shall assume full administrative responsibility for the life of the project; or the State grant agreement required period, whichever comes first.

H. LIMITATION OF LIABILITY

This Agreement shall not create a general liability of the constituent members of NCNMEDD.

City shall hold NCNMEDD harmless with respect to any damages, expenses, or claims arising or in connection with any negligent acts, errors, or omissions performed by City under this Agreement. This term shall not limit NCNMEDD liability with respect to NCNMEDD's negligence or willful misconduct.

I. MODIFICATION AND TERMINATION

Any modifications or amendments to this Agreement shall be in writing, and when signed by both parties shall be made part of the Agreement. This Agreement may be terminated by either party upon thirty (30) days written notice to the other.

J. CERTIFICATION

City shall comply with the requirements of all applicable laws, rules, and regulations, and shall assume full responsibility for payment of federal, state, and local taxes and contributions imposed or required under Social Security, Workers Compensation and income tax laws. City is required to follow all State procurement regulations and it is City obligation and responsibility to follow all State requirements as certified in the project bond questionnaire process and as included in associated State grant agreements, including reporting and drawdown requirements, such documents to be filed for each project in conjunction with this agreement.

K. ADEQUATE APPROPRIATIONS

Performance of this agreement is contingent upon sufficient appropriations and authorization being made for the performance of this Agreement. If sufficient appropriations and authorization are not made, this Agreement shall terminate immediately upon written notice being given by NCNMEDD to City. NCNMEDD's decision as to whether sufficient appropriations are available shall be accepted by City and shall be final. If NCNMEDD proposes an amendment to the Agreement to unilaterally reduce its Fiscal Agency Services, City shall have the option to terminate the Agreement or agree to negotiate for reduced Fiscal Agency Services: within thirty (30) days of receipt of the proposed amendment.

L. PENALTIES

The Procurement Code, NMSA 1978, Sections 13-1-28 to -199, imposes civil and criminal penalties for its violation. In addition, the New Mexico criminal statutes impose felony penalties for illegal bribes, gratuities, and kickbacks.

M. NOTICES

Any notice required to be given to either party by this Agreement shall be in writing

and shall be delivered in person, by courier service or by U.S. mail, either first class or certified, return receipt requested, postage prepaid as follows:

To: City
City Manager John Blair
City of Santa Fe
200 Lincoln
Santa Fe, New Mexico, 87501j

To NCNMEDD:
Monica Abeita Executive Director NCNMEDD
3900 Paseo del Sol
Santa Fe, NM 87507

N. DISPUTE RESOLUTION

The parties to this agreement agree that in the event of a dispute that may arise hereunder, which dispute cannot be reasonably resolve, they will submit to mediation by a neutral mediator, the cost of which will be borne equally by both parties. Disputes that cannot be resolved by mediation shall be subject to the laws of the State of New Mexico under the jurisdiction of the First Judicial District Court.

O. BREACH AND DEFAULT

If either party commits a breach or default in the performance or observance of any of its obligations under this agreement and such breach or default continues and is not corrected within thirty (30) days of written notification of such breach or default by either party to the other, the non-breaching or non-defaulting party shall have the right to terminate this agreement by giving notice to the breaching or defaulting party.

P. ASSIGNMENT

No portion of this agreement may be assigned to another party without the express written consent of the City and NCNMEDD.

APPROVED THIS 19th DAY OF December, 2023, BY CITY.

NORTH CENTRAL NEW MEXICO ECONOMIC DEVELOPMENT DISTRICT:

BY: Monica Abeita 12/8/23

Monica Abeita, Executive Director Date

IN WITNESS WHEREOF, the City of Santa Fe has agreed to this Waiver as of the date of the signature by the required approval authorities below.

CITY OF SANTA FE:

ALAN WEBBER, MAYOR

DATE: Dec 19, 2023

ATTEST:

Geralyn Cardenas (Dec 19, 2023 14:06 MST)

GERALYN CARDENAS, INTERIM CITY CLERK XIV

GB MTG 12/13/23

CITY ATTORNEY'S OFFICE:

Erin McSherry

Erin McSherry (Dec 8, 2023 13:36 MST)

ERIN MCSHERRY, CITY ATTORNEY

Munis Contract#_____
Original Contract Item#___23-0688____
SWPA/GSA/Coop/RFP/ITB #: _____

CITY OF SANTA FE
AMENDMENT No. 1 TO
Intergovernmental Service Agreement
ITEM#23-0688

This AMENDMENT No 1 (the "Amendment") amends the INTERGOVERNMENTAL SERVICES AGREEMENT BETWEEN CITY OF SANTA FE AND NORTH CENTRAL NEW MEXICO ECONOMIC DEVELOPMENT DISTRICT FOR FISCAL AGENT SERVICES, dated December 19, 2023 (the "Agreement"), between the City of Santa Fe (the "City") and the North Central New Mexico Economic Development District (NCNMEDD). The date of this Amendment shall be the date when it is executed by the City and the NCNMEDD whichever occurs last.

RECITALS:

A. Under the terms of the Agreement, the NCNMEDD has agreed to provide fiscal agent services in connection with the Capital Projects specified under the Agreement.

B. Pursuant to Article I of the Agreement, and for good and valuable consideration, the receipt and sufficiency of which are acknowledged by the parties, the City and the NCNMEDD agree as follows:

1. PURPOSE:

Article A of the Agreement is amended to add an additional twenty-two (22) Capital appropriations as seen on Exhibit A.

2. COMPENSATION:

Article D, of the Agreement is amended in its entirety as follows:

NCNMEDD has agreed to provide the agreed upon services at one percent (1%) of the dollar amount(s) the City expends during the term of this Agreement towards the completion of the Projects, as those amounts were appropriated. Billing for services to City shall occur by NCNMEDD no more than on a monthly basis. The City will not use funds from these Capital appropriations to make such payments.

3. CONTRACT IN FULL FORCE.

Except as specifically provided in this Amendment, the Agreement remains and shall remain in full force and effect, in accordance with its terms.

IN WITNESS WHEREOF, the parties have executed this Amendment No.1 to the Agreement as of the dates set forth below.

CITY OF SANTA FE:

Alan Webber (Mar 14, 2024 10:01 MDT)

ALAN WEBBER, MAYOR

DATE: Mar 14, 2024

NCNMEDD

Monica Abeita

MONICA ABEITA
EXECUTIVE DIRECTOR

Executive Director
TITLE

DATE: Feb. 20. 2024

ATTEST:

Geralyn Cardenas (Mar 14, 2024 11:32 MDT)

GERALYN CARDENAS, INTERIM CITY CLERK
GB MTG 03/13/2024 XIV

CITY ATTORNEY'S OFFICE:

Marcos Martinez
Marcos Martinez (Feb 16, 2024 13:08 MST)

SENIOR ASSISTANT CITY ATTORNEY

EXHIBIT A

Approp ID	Leg. Session	Appropriation Title	Approp. Amount	Reversion Date	Agency	Bond Series
22-G2419	2022	Jemez Road Construction	$ 400,000	6/30/2026	NMED	STB23SC
22-G3010	2022	SF Fire Fleet Equip / Upgrade Improv	$ 120,000	6/30/2026	DFA	STB23SC
22-G3012	2022	Harrison Rd Improve Construct	$ 100,000	6/30/2026	DFA	STB23SC
22-G3016	2022	Homebound Meals Program Improve	$ 200,000	6/30/2026	DFA	STB23SC
22-G3017	2022	Midtown Property Infra Improve	$ 1,100,000	6/30/2026	DFA	STB23SC
22-G3018	2022	SWAN Park Phase 2 Construct	$ 380,000	6/30/2026	DFA	STB23SC
22-G3019	2022	Tierra Contenta Trail Improve	$ 300,000	6/30/2026	DFA	STB23SC
22-G3165	2022	Median Beautify Phase 1 Design	$ 1,170,000	6/30/2026	DOT	STB23SC
22-G3169	2022	Governor Miles Rd. Construct	$ 300,000	6/30/2026	DOT	STB23SC
22-G3170	2022	Pacheco Street Improve	$ 150,000	6/30/2026	DOT	STB23SC
G22-5353	2022	Mary Esther Gonzales Senior Ctr- Equip	$ 235,630	6/30/2026	ALTSD	STB22SC- GO Bonds
G22-5354	2022	Pasatiemo Senior Ctr- Equip	$ 65,805	6/30/2026	ALTSD	STB22SC- GO Bonds
23-H3200	2023	Santa Fe Building Upgrade	$ 210,000	6/30/2027	DFA	General Fund
23-H3201	2023	SF Fire Station #2 Construction	$ 3,995,000	6/30/2027	DFA	General Fund
23-H3202	2023	SF Homebound Meals Faculty Ren	$ 200,000	6/30/2027	DFA	General Fund
23-H3203	2023	SF Midtown Infa. Improvement	$ 4,900,000	6/30/2027	DFA	General Fund
23-H3204	2023	SF Muni Rec Sports Cmplx Field Const.	$ 50,000	6/30/2027	DFA	General Fund
23-H3205	2023	SF Pickleball Cmplx Ft. Marcy Constr.	$ 650,000	6/30/2027	DFA	General Fund
23-H3206	2023	SF SWAN Park Phase 2 Improvement	$ 2,400,000	6/30/2027	DFA	General Fund
23-H3207	2023	SF Water History Park Improvement	$ 350,000	6/30/2027	DFA	General Fund
23-H3359	2023	Governor Miles Road Improvement	$ 210,000	6/30/2027	DOT	General Fund
23-H3360	2023	Pacheco Street Improvement	$ 350,000	6/30/2027	DOT	General Fund

Munis Contract#_____
Original Contract Item#___23-0688_____
SWPA/GSA/Coop/RFP/ITB #: _____

CITY OF SANTA FE
AMENDMENT No. 2 TO
Intergovernmental Service Agreement
ITEM#23-0688

This AMENDMENT No 2 (the "Amendment") amends the INTERGOVERNMENTAL SERVICES AGREEMENT BETWEEN CITY OF SANTA FE AND NORTH CENTRAL NEW MEXICO ECONOMIC DEVELOPMENT DISTRICT FOR FISCAL AGENT SERVICES, dated December 19, 2023 (the "Agreement"), between the City of Santa Fe (the "City") and the North Central New Mexico Economic Development District (NCNMEDD). The date of this Amendment shall be the date when it is executed by the City and the NCNMEDD whichever occurs last.

RECITALS:

A. Under the terms of the Agreement, the NCNMEDD has agreed to provide fiscal agent services in connection with the Capital Projects specified under the Agreement.

B. Pursuant to Article I of the Agreement, and for good and valuable consideration, the receipt and sufficiency of which are acknowledged by the parties, the City and the NCNMEDD agree as follows:

1. PURPOSE:

Article A of the Agreement is amended to add an additional three (3) capital appropriations as seen on Exhibit B.

2. CONTRACT IN FULL FORCE.

Except as specifically provided in this Amendment, the Agreement remains and shall remain in full force and effect, in accordance with its terms.

IN WITNESS WHEREOF, the parties have executed this Amendment No.2 to the Agreement as of the dates set forth below.

CITY OF SANTA FE:

Alan Webber (Apr 11, 2024 21:17 MDT)

ALAN WEBBER, MAYOR

DATE: Apr 11, 2024

CONTRACTOR:
NCNMEDD

Monica Abeita

MONICA ABEITA
EXECUTIVE DIRECTOR

Executive Director
TITLE

April 2, 2024

DATE:

ATTEST:

GERALYN CARDENAS (Apr 12, 2024 09:03 MDT)

GERALYN CARDENAS, INTERIM CITY CLERK

GB MTG 04/10/2024 XIV

CITY ATTORNEY'S OFFICE:

Marcos Martinez
Marcos Martinez (Apr 4, 2024 09:38 MDT)

SENIOR ASSISTANT CITY ATTORNEY

APPROVED FOR FINANCES:

Emily K. Oster

FINANCE DIRECTOR

EXHIBIT B

23-ZH9298	for Santa Fe to purchase security cameras and security systems at municipal parks	$	95,000.00
23-ZH9300	to purchase equipment and to provide arson investigation training to fire department three in Santa Fe	$	125,000.00
23-ZH9401	for sanitization and deep cleaning of all municipal swimming pools in Santa Fe	$	75,000.00

Original Contract Item# 23-0688
SWPA/GSA/Coop/RFP/ITB #: N/A

CITY OF SANTA FE
AMENDMENT No. 3 TO
Intergovernmental Service Agreement
ITEM#23-0688

This AMENDMENT No 3 (the "Amendment") amends the INTERGOVERNMENTAL SERVICES AGREEMENT BETWEEN CITY OF SANTA FE AND NORTH CENTRAL NEW MEXICO ECONOMIC DEVELOPMENT DISTRICT FOR FISCAL AGENT SERVICES, dated December 19, 2023 (the "Agreement"), between the City of Santa Fe (the "City") and the North Central New Mexico Economic Development District (NCNMEDD). The date of this Amendment shall be the date when it is executed by the City and the NCNMEDD whichever occurs last.

RECITALS:

A. Under the terms of the Agreement, the NCNMEDD has agreed to provide fiscal agent services in connection with the Capital Projects specified under the Agreement.

B. Pursuant to Article I of the Agreement, and for good and valuable consideration, the receipt and sufficiency of which are acknowledged by the parties, the City and the NCNMEDD agree as follows:

1. PURPOSE:

Article A of the Agreement is amended to add twenty-two (22) capital appropriations as seen on Exhibit A.

2. CONTRACT IN FULL FORCE.

Except as specifically provided in this Amendment, the Agreement remains and shall remain in full force and effect, in accordance with its terms.

IN WITNESS WHEREOF, the parties have executed this Amendment No.3 to the Agreement as of the dates set forth below.

CITY OF SANTA FE:

Alan Webber (Nov 15, 2024 09:56 MST)

ALAN WEBBER, MAYOR

DATE: Nov 15, 2024

CONTRACTOR:
NCNMEDD

Monica Abeita
Monica Abeita (Oct 11, 2024 13:22 MDT)

MONICA ABEITA
EXECUTIVE DIRECTOR

DATE: Oct 11, 2024

ATTEST:

Andrea Salazar
Andrea Salazar (Nov 15, 2024 11:02 MST)

ANDREA SALAZAR, CITY CLERK

CITY ATTORNEY'S OFFICE:

Marcos Martinez
Marcos Martinez (Oct 11, 2024 13:26 MDT)

SENIOR ASSISTANT CITY ATTORNEY

APPROVED FOR FINANCES:

Emily K. Oster

FINANCE DIRECTOR

EXHIBIT A

Approp ID	Leg. Session	Appropriation Title	Approp. Amount	Reversion Date	Funding Agency	Funding Source
I2455	2024	Paseo Real Wastewater Facility	$1,600,000	30-Jun-28	NMED	General Fund
I2457	2024	Jemez Rd Sewer	$210,000	30-Jun-28	NMED	General Fund
I2458	2024	Vereda de Velencia WWater	$160,000	30-Jun-2028	NMED	General Fund
I3023	2024	Police Dept. Equipment Purchase	$250,000	30-Jun-2026	DFA	General Fund
I3134	2024	Fire Stn 2 Construct	$250,000	30-Jun-2028	DFA	General Fund
I3136	2024	Soccer Valley MRC Construct	$3,425,000	30-Jun-2028	DFA	General Fund
I3138	2024	Los Prados Park	$438,000	30-Jun-2028	DFA	General Fund
I3141	2024	Fire SCBA Equip Purchase	$250,000	30-Jun-2026	DFA	General Fund
I3142	2024	Ft Marcy Park Ren	$5,000,000	30-Jun-2028	DFA	General Fund
I3143	2024	Permanent and Transitional Housing	$400,000	30-Jun-2028	DFA	General Fund
I3144	2024	Railyard Bldg. Upgrade	$100,000	30-Jun-2028	DFA	General Fund
I3145	2024	Railyard Multipurpose Bldg	$175,000	30-Jun-2028	DFA	General Fund
I3146	2024	Regional Airport Phase 2 Improve	$2,000,000	30-Jun-2028	DFA	General Fund
I3147	2024	River Park Pedestrian Bridge	$240,000	30-Jun-2028	DFA	General Fund
I3318	2024	NM599-Airport Access Road	$4,500,000	30-Jun-2028	NMDOT	General Fund
I3319	2024	Rufina St. & Lopez Lane Intersection	$50,000	30-Jun-2028	NMDOT	General Fund
I3320	2024	Paseo del Sol Extension	$50,000	30-Jun-2028	NMDOT	General Fund
I3321	2024	St. Michael's Rail Trail Underpass	$100,000	30-Jun-2028	NMDOT	General Fund
I4219	2024	El Museo Improvements	$126,950	30-Jun-2026	DFA	Severance Tax Bond
I4220	2024	Homebound Meals	$100,000	30-Jun-2028	DFA	General Fund
I4221	2024	Municipal Court Renovations	$29,843	30-Jun-2028	DFA	General Fund
I4222	2024	Supportive Housing	$844,470	30-Jun-2026	DFA	General Fund

FIR No. 10634.1

FISCAL IMPACT REPORT

General Information:

(Check) **Bill:** _____ **Resolution:** X

Short Title(s): Authorized Representatives and Agents for DFA Appropriation ID Number G3165, NMDOT Control Number C5223165

Sponsor(s): Councilor Amanda Chavez

Reviewing Department(s): Public Works Department

Staff Completing FIR: Regina Wheeler **Date:** 12/11/2024
Phone: (505) 955-6622

Reviewed by City Attorney: _____ **Date:** Jan 8, 2025

Reviewed by Finance Director: Emily K. Oster **Date:** Jan 9, 2025

Summary:
The Resolution designates authorized representatives and agents for New Mexico Department of Finance and Administration (DFA) appropriation ID Number G3165, New Mexico Department of Transportation (NMDOT) Control Number C5223165 ("Grant Agreement"). The Grant Agreement makes available one million one hundred seventy thousand dollars ($1,170,000), appropriated by the New Mexico Legislature for a project to plan, design, construct, landscape and make phase 1 improvements to medians on arterial and collector roads for the city of Santa Fe in Santa Fe County.

Departments Affected:
Public Works Department.

Consequences of Not Enacting Legislation:
If this legislation is not adopted, the City will not satisfy Article X. B. (v) of the Grant Agreement, which requires the Governing Body adopt a resolution authorizing the person identified as the official representative of the City to sign the Grant Agreement and to sign Requests for Payment. Additionally, without the adoption of this Resolution the City would not receive NMDOT's funding in the amount of one million one hundred and seventy thousand dollars ($1,170,000).

Conflict, Duplication, Companionship, or Relationship to Other Legislation:
The Governing Body will separately be approving the agreement through a later action.

Performance and Administrative Implications:
The plan, design, construction, landscape and phase 1 improvements of the project in association with this Grant Agreement will be undertaken by the Public Works Department and the grant will be administered with support from the Public Works Department and Finance Department staff.

Fiscal Implications:

**Amendment No. 1 to the Intergovernmental Agreement states that "NCNMEDD has agreed to provide the agreed upon services at one percent (1%) of the dollar amount(s) the City expends during the term of this Agreement towards the completion of the Projects". If the total agreement amount of one million, one hundred seventy thousand dollars ($1,170,000) is expended, then NCNMEDD will receive eleven thousand seven hundred dollars ($11,700) as one percent (1%) of the dollar amount the City expends for the Project. The Governing Body will be approving the agreement through a separate action.

Fiscal Impact

___X___ Check here if no fiscal impact

Expenditures

Expenditure Type	FYE 2025	FYE 2026	FYE 2027	Require BAR (Y/N)	Recurring (R) or Non-recurring (NR)	Fund	3-Year Total Cost
Personnel and Benefits*	$	$	$				
Capital Outlay	$	$	$				
Contractual/ Professional Services	$	$	$				
Operating	$	$	$				$
Total:	$	$	$				$

Expenditure Narrative:
**** See Fiscal Implications Section**

Revenue

Revenue Type	FYE 2025	FYE 2026	FYE 2027	Recurring (R) or Non-recurring (NR)	Fund
General Fund	$	$	$		
Special Revenue	$	$	$		
CIP	$	$	$		
Enterprise	$	$	$		
Internal Service	$	$	$		
Trust and Agency	$	$	$		
Federal	$	$	$		
Other	$	$	$		
Total	$	$	$		

Revenue Narrative:

Signature: Regina Wheeler
Regina Wheeler (Jan 9, 2025 17:17 MST)

Email: rawheeler@santafenm.gov